NEW YORK CITY DEPARTMENT OF
DESIGN + CONSTRUCTION

THE CITY OF NEW YORK
DEPARTMENT OF DESIGN AND CONSTRUCTION
DIVISION OF INFRASTRUCTURE

30-30 THOMSON AVENUE
LONG ISLAND CITY, NEW YORK 11101-3045
TELEPHONE (718) 391-1000
WEBSITE www.nyc.gov/buildnyc

LAW

VOLUME 1 OF 3

BID BOOKLET

FOR FURNISHING ALL LABOR AND MATERIALS NECESSARY AND REQUIRED FOR:

PROJECT ID: QED1008

FOR THE INSTALLATION OF 60-INCH AND 12-INCH WATER MAINS IN:
54TH STREET BETWEEN FLUSHING AVENUE AND GRAND AVENUE

Together With All Work Incidental Thereto
BOROUGH OF QUEENS
CITY OF NEW YORK

FOR THE DEPARTMENT OF ENVIRONMENTAL PROTECTION
PREPARED BY
IN-HOUSE DESIGN

February 25, 2013

W3-029

NEW YORK CITY DEPARTMENT OF
DESIGN + CONSTRUCTION

DAVID J. BURNEY, FAIA
Commissioner

CAROL DIAGOSTINO
Agency Chief
Contracting Officer

August 28, 2013

CERTIFIED MAIL - RETURN RECEIPT REQUEST
CRUZ CONTRACTORS LLC
952 Holmdel Road
Holmdel, NJ 07733

RE: FMS ID: QED-1008
E-PIN: 85013B008001
DDC PIN: 8502012WM0006C
INSTALLATION OF 60-INCH AND 12-INCH WATER MAINS IN: 54TH STREET BETWEEN FLUSHING AVENUE AND GRAND AVENUE- BOROUGH OF QUEENS
NOTICE OF AWARD

Dear Contractor:

You are hereby awarded the above referenced contract based upon your bid in the amount of $3,280,029.00 submitted at the bid opening on May 30, 2013. Within ten (10) days of your receipt of this notice of award, you are required to take the actions set forth in Paragraphs (1) through (3) below. For your convenience, attached please find a copy of Schedule A of the General Conditions to the Contract, which sets forth the types and amounts of insurance coverage required for this contract.

(1) Execute four copies of the Agreement in the Contracts Unit, 30-30 Thomson Avenue, 1st Floor, Long Island City, New York (IDCNY Building). A Commissioner of Deeds will be available to witness and notarize your signature. The Agreement must be signed by an officer of the corporation or a partner of the firm.

(2) Submit to the Contracts Unit four properly executed performance and payment bonds. If required for this contract, copies of performance and payment bonds are attached.

(3) Submit to the Contracts Unit the following insurance documentation: (a) original certificate of insurance for general liability in the amount required by Schedule A, and (b) original certificates of insurance or other proof of coverage for workers' compensation and disability benefits, as required by New York State Law. The insurance documentation specified in this paragraph is required for registration of the contract with the Comptroller's Office.

On or before the contract commencement date, you are required to submit all other certificates of insurance and/or policies in the types and amounts required by Schedule A. Such certificates of Insurance and/or policies must be submitted to the Agency Chief Contracting Office, Attention: Risk Manager, Fourth Floor at the above indicated department address.

Your attention is directed to the section of the Information for Bidders entitled "Failure to Execute Contract". As indicated in this section, in the event you fail to execute the contract and furnish the required bonds within the (10) days of your receipt of this notice of award, your bid security will be retained by the City and you will be liable for the difference between your bid price and the price for which the contract is subsequently awarded, less the amount of the bid security retained.

Sincerely,

Carol DiAgostino

Bid Tab

Description	**INSTALLATION OF 60-INCH AND 12-INCH WATER MAINS IN: 54TH STREET BETWEEN FLUSHING AVENUE AND GRAND AVENUE- BOROUGH OF QUEENS**		
Bid Date	**5/30/2013**	**FMS ID**	**QED-1008**
Estimated Cost	**$2,177,924.00**	**DEP Supervised**	**No**
Bid Security	**2% of Total Bid Price**	**PLA**	**No**
Time Allowed	**180 CCD**	**Contract Manager**	**Giovanni Matos**
Addendum	**7**	**Project Manager**	**Kupershtok, Yelena**
PIN	**8502012WM0006C**	**E-PIN**	**85013B0080**
Selective Bidding	☐Yes ☒No	**Consultant**	**In-House**

Bid Rank	Vendor	Bid Amount	Security Type
1	CRUZ CONTRACTORS LLC	$3,280,029.00	Bond
2	NORTHEAST REMSCO CONSTRUCTION, INC	$3,314,522.51	Bond
3	C.A.C. INDUSTRIES, INC.	$3,321,594.18	Bond
4	TRIUMPH CONSTRUCTION CORP.	$4,265,148.78	Bond

Recorder: Tia Clarke – ext. 2608

Approver: Kelly Williams

1

BID FORM
THE CITY OF NEW YORK
DEPARTMENT OF DESIGN AND CONSTRUCTION
DIVISION OF INFRASTRUCTURE

BID FOR FURNISHING ALL LABOR AND MATERIAL NECESSARY AND REQUIRED FOR:

PROJECT ID: QED1008

FOR THE INSTALLATION OF 60-INCH AND 12-INCH WATER MAINS IN: 54TH STREET BETWEEN FLUSHING AVENUE AND GRAND AVENUE

Together With All Work Incidental Thereto
BOROUGH OF QUEENS

Name of Bidder: Cruz Contractors LLC

Date of Bid Opening: May 30, 2013

Bidder is: (Check one, whichever applies) Individual ( ) ~~Partnership~~ Limited Liability Company (X) Corporation ( )

Place of Business of Bidder: 952 Holmdel Road, Holmdel, NJ 07733

Bidder's Telephone Number: 732-946-8400 Fax Number: 732-946-8956

Bidder's E-Mail Address: dpillari@cruzcontractors.com

Residence of Bidder (If Individual): _____

If Bidder is a Partnership, fill in the following blanks:

Names of Partners	Residence of Partners
See attached List of Members	

If Bidder is a Corporation, fill in the following blanks:

Organized under the laws of the State of _____

Name and Home Address of President: _____

Name and Home Address of Secretary: _____

Name and Home Address of Treasurer: _____

BID FORM

Cruz Contractors LLC

The above-named Bidder affirms and declares:

1. The said bidder is of lawful age and the only one interested in this bid; and no person, firm or corporation other than hereinbefore named has any interest in this bid, or in the Contract proposed to be taken.

2. By submission of this bid, each bidder and each person signing on behalf of any bidder certifies, and in the case of a joint bid each party thereto certifies as to its own organization, under penalty of perjury, that to the best of its knowledge and belief: (1) the prices in this bid have been arrived at independently without collusion, consultation, communication or agreement, for the purpose of restricting competition, as to any matter relating to such prices with any other bidder or with any competitor; (2) unless otherwise required by law, the prices quoted in this bid have not been knowingly disclosed by the bidder and will not knowingly be disclosed by the bidder prior to opening, directly or indirectly, to any other bidder or to any competitor; and (3) No attempt has been made or will be made by the bidder to induce any other person, partnership or corporation to submit or not to submit a bid for the purpose of restricting competition.

3. No councilman or other officer or employee or person whose salary is payable in whole or in part from the City Treasury is directly or indirectly interested in this bid, or in the supplies, materials, equipment, work or labor to which it relates, or in any of the profits thereof.

4. The bidder is not in arrears to the City of New York upon debt or contract or taxes, and is not a defaulter, as surety or otherwise, upon any obligation of the City of New York, and has not been declared not responsible, or disqualified, by any agency of the City of New York or State of New York, nor is there any proceeding pending relating to the responsibility or qualification of the bidder to receive public contracts except as set forth on the Affirmation included as page C-6 of this Bid Booklet.

The bidder hereby affirms that it has paid all applicable City income, excise and other taxes for all years it has conducted business activities in New York City.

5. The bidder, as an individual, or as a member, partner, director or officer of the bidder, if the same be a firm, partnership or corporation, executes this document expressly warranting and representing that should this bid be accepted by the City and the Contract awarded to him, he and his subcontractors engaged in the performance: (1) will comply with the provisions of Section 6-108 of the Administrative Code of the City of New York and the non-discrimination provisions of Section 220a of the New York State Labor Law, as more expressly and in detail set forth in the Agreement; (2) will comply with Section 6-109 of the Administrative Code of the City of New York in relation to minimum wages and other stipulations as more expressly and in detail set forth in the Agreement; (3) have complied with the provisions of the aforesaid laws since their respective effective dates, and (4) will post notices to be furnished by the City, setting forth the requirements of the aforesaid laws in prominent and conspicuous places in each and every plant, factory, building and structure where employees engaged in the performance of the Contract can readily view it, and will continue to keep such notices posted until the supplies, materials and equipment, or work labor and services required to be furnished or rendered by the

Contractor have been finally accepted by the City. In the event of any breach or violation of the foregoing, the Contractor may be subject to damages, liquidated or otherwise, cancellation of the Contract and suspension as a bidder for a period of three years. (The words, "the bidder", "he", "his", and "him" where used herein shall mean the individual bidder, firm, partnership or corporation executing this bid).

6. Compliance Report

The bidder, as an individual, or as a member, partner, director, or officer of the bidder, if the same be a firm, partnership, or corporation, (1) represents that his attention has been specifically drawn to Executive Order No. 50, dated, April 25, 1980, on Equal Employment Compliance of the contract, and (2) warrants that he will comply with the provisions of Executive Order No. 50. The Employment Report must be submitted as part of the bid.

The bidder, as an individual, or as a member, partner, director, or officer of the bidder, if the same be a firm, partnership, or corporation, executes this document expressly warranting that he will comply with: (1) the provision of the contract on providing records, Chapter 8.

7. By submission of this bid, the bidder certifies that it now has and will continue to have the financial capability to fully perform the work required for this contract. Any award of this contract will be made in reliance upon such certification. Upon request therefor, the bidder will submit written verification of such financial capability in a form that is acceptable to the department.

8. In accordance with Section 165 of the State Finance Law, the bidder agrees that tropical hardwoods, as defined in Section 165 of the State Finance Law, shall not be utilized in the performance of this Contract, except as the same are permitted by the foregoing provision of law.

9. The bidder has visited and examined the site of the work and has carefully examined the Contract in the form approved by the Corporation Counsel, and will execute the Contract and perform all its items, covenants and conditions, and will provide, furnish and deliver all the work, materials, supplies, tools and appliances for all labor and materials necessary or required for the hereinafter named work, all in strict conformity with the Contract, for the prices set forth in the Bid Schedule:

BID FORM
Cruz Contractors LLC

PROJECT ID: QED1008

TOTAL BID PRICE: In the space provided below, the Bidder shall indicate its Total Bid Price in figures. Such Total Bid Price is set forth on the final page of the Bid Schedule.

TOTAL BID PRICE:
(a/k/a BID PROPOSAL)

$ 3,280,029.00
ae
5/30/13

BIDDER'S SIGNATURE AND AFFIDAVIT

WARNING!!! If M/WBE goals have been established for this Contract, you MUST complete and submit the Affirmations on the 2nd page of the Subcontractor Utilization Plan (or a pre-approved waiver) at the time you submit your bid. Failure to comply will result in the rejection of your bid.

Bidder: Cruz Contractors LLC

By: _____
(Signature of Partner or corporate officer)

Antonio Cardoso-Managing Member

Attest: Secretary of Corporate Bidder
(Corporate Seal)

Affidavit on the following page should be subscribed
and sworn to before a Notary Public

(NO TEXT ON THIS PAGE)

BID FORM (TO BE NOTARIZED)
Cruz Contractors LLC

AFFIDAVIT WHERE BIDDER IS AN INDIVIDUAL

STATE OF NEW YORK, COUNTY OF _____ ss:
_____ being duly sworn says:
I am the person described in and who executed the foregoing bid, and the several matters therein stated are in all respects true.

_____
(Signature of the person who signed the Bid)

Subscribed and sworn to before me this
_____ day of _____, _____

_____
Notary Public

AFFIDAVIT WHERE BIDDER IS A ~~PARTNERSHIP~~ Limited Liability Company

STATE OF ~~NEW YORK~~ New Jersey, COUNTY OF Monmouth ss:
Antonio Cardoso being duly sworn says:
I am a member of Cruz Contractors LLC the firm described in and which executed the foregoing bid. I subscribed the name of the firm thereto on behalf of the firm, and the several matters therein stated are in all respects true.

(Signature of ~~Partner~~ who signed the Bid)
Antonio Cardoso-Managing Member

Subscribed and sworn to before me this
30th day of May, 2013

Lisa E Gulino
Notary Public

LISA E GULINO
NOTARY PUBLIC
STATE OF NEW JERSEY
My Commission Expires December 28, 2016

AFFIDAVIT WHERE BIDDER IS A CORPORATION

STATE OF NEW YORK, COUNTY OF _____ ss:
_____ being duly sworn says:
I am the _____ of the above named corporation whose name is subscribed to and which executed the foregoing bid. I reside at _____
I have knowledge of the several matters therein stated, and they are in all respects true.

_____
(Signature of Partner who signed the Bid)

Subscribed and sworn to before me this
_____ day of _____, _____

_____
Notary Public

AFFIRMATION

The undersigned bidder affirms and declares that said bidder is not in arrears to the City of New York upon debt, contract or taxes and is not a defaulter, as surety or otherwise, upon obligation to the City of New York, and has not been declared not responsible, or disqualified, by any agency of the City of New York, nor is there any proceeding pending relating to the responsibility or qualification of the bidder to receive public contracts except: _____

(If none, the bidder shall insert the word "None" in the space provided above.)

Full Name of Bidder: Cruz Contractors LLC
Address: 952 Holmdel Road
City Holmdel State NJ Zip Code 07733

CHECK ONE BOX AND INCLUDE APPROPRIATE NUMBER:

/__/ A - Individual or Sole Proprietorship*
SOCIAL SECURITY NUMBER

/x/ B - Limited Liability Company
Partnership, Joint Venture or other unincorporated organization
EMPLOYER IDENTIFICATION NUMBER

20-4420966

/__/ C- Corporation
EMPLOYER IDENTIFICATION NUMBER

By: _____
Signature

Title: Antonio Cardoso-Managing Member

If a corporation, place seal here

This affirmation must be signed by an officer or duly authorized representative.

*Under the Federal Privacy Act the furnishing of Social Security Numbers by bidders on City contracts is voluntary. Failure to provide a Social Security Number will not result in a bidder's disqualification. Social Security Numbers will be used to identify bidders, proposers or vendors to ensure their compliance with laws, to assist the City in enforcement of laws, as well as to provide the City a means of identifying of businesses which seek City contracts.

NEW YORK CITY DEPARTMENT OF DESIGN AND CONSTRUCTION
DIVISION OF INFRASTRUCTURE - BUREAU OF DESIGN

Contract PIN 8502012WM0006C
Project ID QED1008

BID SCHEDULE

NOTE: (1) The Agency may reject a bid if it contains unbalanced bid prices. An unbalanced bid is considered to be one containing lump sum or unit items which do not reflect reasonable actual costs plus a reasonable proportionate share of the Bidder's anticipated profit, overhead costs, and other indirect costs, anticipated for the performance of the items in question.

(2) The following bid prices on Unit Price Contracts are to be paid for the actual quantities of the several classes of work in the completed work or structure, and they cover the cost of all work, labor, material, tools, plant and appliances of every description necessary to complete the entire work, as specified, and the removal of all debris, temporary work and appliances.

(3) PLEASE BE SURE A LEGIBLE BID IS ENTERED, IN INK, FOR EACH ITEM. Alterations must be initialed in ink by the bidder.

(4) The Extended Amount entered in Column 5 shall be the product of the Estimated Quantity in Column 2 times the Unit Price Bid in Column 4.

(5) Prospective bidders must examine the Bid Schedule carefully and, before bidding, must advise the Commissioner, in writing, if any pages are missing, and must request that such missing pages be furnished them. The pages of this Bid Schedule are numbered consecutively, as follows: B - 3 through B - 24 [REVISION # 1]

05/13/2013
10:50AM
BID PAGES

NEW YORK CITY DEPARTMENT OF DESIGN AND CONSTRUCTION
DIVISION OF INFRASTRUCTURE - BUREAU OF DESIGN

Contract PIN 8502012WM0006C
Project ID QED1008

COL. 1 ITEM NUMBER (SEQUENCE NO.)	COL. 2 ENGINEER'S ESTIMATE OF QUANTITIES	COL. 3 CLASSIFICATIONS	COL. 4 UNIT PRICES (IN FIGURES) DOLLARS	CTS	COL. 5 EXTENDED AMOUNTS (IN FIGURES) DOLLARS	CTS
4.02 AF-R (001)	375.0 S.Y.	ASPHALTIC CONCRETE WEARING COURSE, 2" THICK	$ 30	00	$ 11,250	00
4.02 AG (002)	750.0 S.Y.	ASPHALTIC CONCRETE WEARING COURSE, 3" THICK	$ 40	00	$ 30,000	00
4.02 CA (003)	158.0 TONS	BINDER MIXTURE	$ 200	00	$ 31,600	00
4.04 B (004)	25.0 C.Y.	CONCRETE BASE FOR PAVEMENT, VARIABLE THICKNESS FOR TRENCH RESTORATION, CLASS B-32	$ 300	00	$ 7,500	00

NEW YORK CITY DEPARTMENT OF DESIGN AND CONSTRUCTION
DIVISION OF INFRASTRUCTURE - BUREAU OF DESIGN

Contract PIN 8502012WM0006C
Project ID QED1008

COL. 1 ITEM NUMBER (SEQUENCE NO.)	COL. 2 ENGINEER'S ESTIMATE OF QUANTITIES	COL. 3 CLASSIFICATIONS	COL. 4 UNIT PRICES (IN FIGURES) DOLLARS	CTS	COL. 5 EXTENDED AMOUNTS (IN FIGURES) DOLLARS	CTS
4.04 DC (005)	105.0 C.Y.	CONCRETE BASE FOR PAVEMENT, 9" THICK, CLASS B-32	$ 300	00	$ 31,500	00
4.09 AD (006)	90.0 L.F.	STRAIGHT STEEL FACED CONCRETE CURB (18" DEEP)	$ 75	00	$ 6,750	00
4.13 AAS (007)	275.0 S.F.	4" CONCRETE SIDEWALK (UNPIGMENTED)	$ 25	00	$ 6,875	00
4.18 A (008)	1.0 EACH	MAINTENANCE TREE PRUNING (UNDER 12" CAL.)	$ 180	00	$ 180	00

NEW YORK CITY DEPARTMENT OF DESIGN AND CONSTRUCTION
DIVISION OF INFRASTRUCTURE - BUREAU OF DESIGN

Contract PIN 8502012WM0006C
Project ID QED1008

COL. 1 ITEM NUMBER (SEQUENCE NO.)	COL. 2 ENGINEER'S ESTIMATE OF QUANTITIES	COL. 3 CLASSIFICATIONS	COL. 4 UNIT PRICES (IN FIGURES) DOLLARS	CTS	COL. 5 EXTENDED AMOUNTS (IN FIGURES) DOLLARS	CTS
4.18 B (009)	1.0 EACH	MAINTENANCE TREE PRUNING (12" TO UNDER 18" CAL.)	$ 250	00	$ 250	00
4.21 (010)	200.0 P/HR	TREE CONSULTANT	$ 80	00	$ 16,000	00
50.41S6E10 (011)	25.0 L.F.	10" D.I.P. CLASS 56 SANITARY SEWER, ENCASED IN CONCRETE	$ 700	00	$ 17,500	00
53.11DR (012)	25.0 L.F.	TELEVISION INSPECTION AND DIGITAL AUDIO-VISUAL RECORDING OF SEWERS	$ 60	00	$ 1,500	00

NEW YORK CITY DEPARTMENT OF DESIGN AND CONSTRUCTION
DIVISION OF INFRASTRUCTURE - BUREAU OF DESIGN

Contract PIN 8502012WM0006C
Project ID QED1008

COL. 1 ITEM NUMBER (SEQUENCE NO.)	COL. 2 ENGINEER'S ESTIMATE OF QUANTITIES	COL. 3 CLASSIFICATIONS	COL. 4 UNIT PRICES (IN FIGURES) DOLLARS	CTS	COL. 5 EXTENDED AMOUNTS (IN FIGURES) DOLLARS	CTS
6.02 AAN (013)	250.0 C.Y.	UNCLASSIFIED EXCAVATION	$ 150	00	$ 37,500	00
6.02 XSCW (014)	643.0 C.Y.	INCREMENTAL COST FOR USING SPECIAL CARE WORK METHODS NEAR (FROM 3 FEET TO 50 FEET) TRANSIT FACILITIES	$ 80	00	$ 51,440	00
6.25 RS (015)	300.0 S.F.	TEMPORARY SIGNS	$ 40	00	$ 12,000	00
6.26 (016)	500.0 L.F.	TIMBER CURB	$ 40	00	$ 20,000	00

05/13/2013
10:50AM
BID PAGES

NEW YORK CITY DEPARTMENT OF DESIGN AND CONSTRUCTION
DIVISION OF INFRASTRUCTURE - BUREAU OF DESIGN

Contract PIN 8502012WM0006C
Project ID QED1008

COL. 1 ITEM NUMBER (SEQUENCE NO.)	COL. 2 ENGINEER'S ESTIMATE OF QUANTITIES	COL. 3 CLASSIFICATIONS	COL. 4 UNIT PRICES (IN FIGURES) DOLLARS	CTS	COL. 5 EXTENDED AMOUNTS (IN FIGURES) DOLLARS	CTS
6.28 AA (017)	50.0 L.F.	LIGHTED TIMBER BARRICADES	$ 100	00	$ 5,000	00
6.29 TTM (018)	30.0 EACH	TEMPORARY TUBULAR MARKERS	$ 100	00	$ 3,000	00
6.40 B (019)	15.0 MONTH	ENGINEER'S FIELD OFFICE (TYPE B)	$ 5,500	00	$ 82,500	00
6.44 (020)	290.0 L.F.	THERMOPLASTIC REFLECTORIZED PAVEMENT MARKINGS (4" WIDE)	$ 3	00	$ 870	00

NEW YORK CITY DEPARTMENT OF DESIGN AND CONSTRUCTION
DIVISION OF INFRASTRUCTURE - BUREAU OF DESIGN

Contract PIN 8502012WM0006C
Project ID QED1008

COL. 1 ITEM NUMBER (SEQUENCE NO.)	COL. 2 ENGINEER'S ESTIMATE OF QUANTITIES	COL. 3 CLASSIFICATIONS	COL. 4 UNIT PRICES (IN FIGURES) DOLLARS	CTS	COL. 5 EXTENDED AMOUNTS (IN FIGURES) DOLLARS	CTS
6.49 (021)	290.0 L.F.	TEMPORARY PAVEMENT MARKINGS (4" WIDE)	$ 2	00	$ 580	00
6.52 (022)	1,560.0 P/HR	UNIFORMED FULL-TIME FLAGPERSON	$ 80	00	$ 124,800	00
6.53 (023)	290.0 L.F.	REMOVE EXISTING LANE MARKINGS (4" WIDE)	$ 2	00	$ 580	00
6.87 (024)	140.0 EACH	PLASTIC BARRELS	$ 50	00	$ 7,000	00

NEW YORK CITY DEPARTMENT OF DESIGN AND CONSTRUCTION
DIVISION OF INFRASTRUCTURE - BUREAU OF DESIGN

Contract PIN 8502012WM0006C
Project ID QED1008

COL. 1 ITEM NUMBER (SEQUENCE NO.)	COL. 2 ENGINEER'S ESTIMATE OF QUANTITIES	COL. 3 CLASSIFICATIONS	COL. 4 UNIT PRICES (IN FIGURES) DOLLARS	CTS	COL. 5 EXTENDED AMOUNTS (IN FIGURES) DOLLARS	CTS
60.11R612 (025)	66.0 L.F.	FURNISHING AND DELIVERING 12-INCH DUCTILE IRON RESTRAINED JOINT PIPE (CLASS 56)	$ 100	00	$ 6,600	00
60.12D12 (026)	78.0 L.F.	LAYING 12-INCH DUCTILE IRON PIPE AND FITTINGS	$ 200	00	$ 15,600	00
60.13M0A24 (027)	1.0 TONS	FURNISHING AND DELIVERING DUCTILE IRON MECHANICAL JOINT 24-INCH DIAMETER AND SMALLER FITTINGS, INCLUDING WEDGE TYPE RETAINER GLANDS	$ 8,000	00	$ 8,000	00
60.21SP5T60 (028)	170.0 L.F.	FURNISHING, DELIVERING AND LAYING 60-INCH STRAIGHT STEEL PIPE, 5/8-INCH WALL THICKNESS	$ 2,000	00	$ 340,000	00

NEW YORK CITY DEPARTMENT OF DESIGN AND CONSTRUCTION
DIVISION OF INFRASTRUCTURE - BUREAU OF DESIGN

Contract PIN 8502012WM0006C
Project ID QED1008

COL. 1 ITEM NUMBER (SEQUENCE NO.)	COL. 2 ENGINEER'S ESTIMATE OF QUANTITIES	COL. 3 CLASSIFICATIONS	COL. 4 UNIT PRICES (IN FIGURES) DOLLARS	CTS	COL. 5 EXTENDED AMOUNTS (IN FIGURES) DOLLARS	CTS
60.22BR5T60 (029)	90.0 L.F.	FURNISHING, DELIVERING AND LAYING 60-INCH STEEL BENDS AND REDUCERS, 5/8-INCH WALL THICKNESS	$ 4,500	00	$ 405,000	00
60.25PSO (030)	1,810.0 LBS.	FURNISHING, DELIVERING AND INSTALLING PLATE STEEL OUTLETS ON STEEL PIPE, ACCESS MANHOLE OUTLETS WITH COVERS, AND NUTS AND BOLTS COMPLETE	$ 26	00	$ 47,060	00
60.29CP (031)	1.0 L.S.	FURNISHING, INSTALLING AND TESTING CORROSION CONTROL AND/OR CATHODIC PROTECTION SYSTEM	$ 15,000	00	$ 15,000	00
60.31D12648 (032)	70.0 L.F.	12-INCH DUCTILE IRON PIPE (CLASS 56) WATER MAIN IN JACKED 48-INCH STEEL SLEEVE	$ 6,300	00	$ 441,000	00

NEW YORK CITY DEPARTMENT OF DESIGN AND CONSTRUCTION
DIVISION OF INFRASTRUCTURE - BUREAU OF DESIGN

Contract PIN 8502012WM0006C
Project ID QED1008

COL. 1 ITEM NUMBER (SEQUENCE NO.)	COL. 2 ENGINEER'S ESTIMATE OF QUANTITIES	COL. 3 CLASSIFICATIONS	COL. 4 UNIT PRICES (IN FIGURES) DOLLARS	CTS	COL. 5 EXTENDED AMOUNTS (IN FIGURES) DOLLARS	CTS
60.31S60672 (033)	80.0 L.F.	60-INCH STEEL PIPE (3/4-INCH WALL THICKNESS) WATER MAIN IN JACKED 72-INCH STEEL SLEEVE	$ 11,000	00	$ 880,000	00
63.11MH (034)	1.5 TONS	FURNISHING, DELIVERING AND INSTALLING 36-INCH CAST IRON MANHOLE HEADS AND COVERS	$ 6,000	00	$ 9,000	00
63.11MS (035)	10.0 EACH	FURNISHING, DELIVERING AND INSTALLING MANHOLE STEPS TYPE PS2-PF	$ 75	00	$ 750	00
64.11ST (036)	4.0 EACH	WITHDRAWING AND REPLACING HOUSE SERVICES USING SMALLER THAN 1-1/2-INCH SCREW TAPS	$ 500	00	$ 2,000	00

NEW YORK CITY DEPARTMENT OF DESIGN AND CONSTRUCTION
DIVISION OF INFRASTRUCTURE - BUREAU OF DESIGN

Contract PIN 8502012WM0006C
Project ID QED1008

COL. 1 ITEM NUMBER (SEQUENCE NO.)	COL. 2 ENGINEER'S ESTIMATE OF QUANTITIES	COL. 3 CLASSIFICATIONS	COL. 4 UNIT PRICES (IN FIGURES) DOLLARS	CTS	COL. 5 EXTENDED AMOUNTS (IN FIGURES) DOLLARS	CTS
64.12COLT (037)	15.0 L.F.	CUTTING AND OFFSETTING HOUSE SERVICE WATER CONNECTIONS (LESS THAN 3-INCH DIAMETER)	$ 60	00	$ 900	00
65.11BR (038)	30.0 LBS.	FURNISHING, DELIVERING AND INSTALLING BANDS, RODS, WASHERS, ETC., COMPLETE, FOR RESTRAINING JOINTS	$ 10	00	$ 300	00
65.21PS (039)	20.0 L.F.	FURNISHING AND PLACING POLYETHYLENE SLEEVE **Unit price bid shall not be less than: $ 0.50**	$ 1	00	$ 20	00
65.31FF (040)	5,956.0 S.F.	FURNISHING, DELIVERING AND PLACING FILTER FABRIC **Unit price bid shall not be less than: $ 0.10**	$	25	$ 1,489	00

NEW YORK CITY DEPARTMENT OF DESIGN AND CONSTRUCTION
DIVISION OF INFRASTRUCTURE - BUREAU OF DESIGN

Contract PIN 8502012WM0006C
Project ID QED1008

COL. 1 ITEM NUMBER (SEQUENCE NO.)	COL. 2 ENGINEER'S ESTIMATE OF QUANTITIES	COL. 3 CLASSIFICATIONS	COL. 4 UNIT PRICES (IN FIGURES) DOLLARS	CTS	COL. 5 EXTENDED AMOUNTS (IN FIGURES) DOLLARS	CTS
65.51PC (041)	10.0 C.Y.	FURNISHING AND PLACING CAST-IN-PLACE CONCRETE CLASS 40 AND PRECAST CONCRETE CLASS 50	$ 1,000	00	$ 10,000	00
65.61SS (042)	780.0 LBS.	FURNISHING, DELIVERING AND PLACING STRUCTURAL, REINFORCING AND MISCELLANEOUS STEEL	$ 2	00	$ 1,560	00
65.71SG (043)	204.0 C.Y.	FURNISHING, DELIVERING AND PLACING SCREENED GRAVEL OR SCREENED BROKEN STONE BEDDING	$ 60	00	$ 12,240	00
7.13 B (044)	9.0 MONTH	MAINTENANCE OF SITE **Unit price bid shall not be less than: $ 7,500.00**	$ 7,500	00	$ 67,500	00

NEW YORK CITY DEPARTMENT OF DESIGN AND CONSTRUCTION
DIVISION OF INFRASTRUCTURE - BUREAU OF DESIGN

Contract PIN 8502012WM0006C
Project ID QED1008

COL. 1 ITEM NUMBER (SEQUENCE NO.)	COL. 2 ENGINEER'S ESTIMATE OF QUANTITIES	COL. 3 CLASSIFICATIONS	COL. 4 UNIT PRICES (IN FIGURES) DOLLARS	CTS	COL. 5 EXTENDED AMOUNTS (IN FIGURES) DOLLARS	CTS
7.36 (045)	285.0 L.F.	PEDESTRIAN STEEL BARRICADES	$ 5	00	$ 1,425	00
7.88 AA (046)	1.0 L.S.	RODENT INFESTATION SURVEY AND MONITORING **Unit price bid shall not be less than: $ 825.00**	$ 1,200	00	$ 1,200	00
7.88 AB (047)	70.0 EACH	RODENT BAIT STATIONS **Unit price bid shall not be less than: $ 60.00**	$ 60	00	$ 4,200	00
7.88 AC (048)	70.0 EACH	BAITING OF RODENT BAIT STATIONS **Unit price bid shall not be less than: $ 8.50**	$ 10	00	$ 700	00

NEW YORK CITY DEPARTMENT OF DESIGN AND CONSTRUCTION
DIVISION OF INFRASTRUCTURE - BUREAU OF DESIGN

Contract PIN 8502012WM0006C
Project ID QED1008

COL. 1 ITEM NUMBER (SEQUENCE NO.)	COL. 2 ENGINEER'S ESTIMATE OF QUANTITIES	COL. 3 CLASSIFICATIONS	COL. 4 UNIT PRICES (IN FIGURES) DOLLARS	CTS	COL. 5 EXTENDED AMOUNTS (IN FIGURES) DOLLARS	CTS
7.88 AD (049)	8.0 BLOCK	WATERBUG BAIT APPLICATIONS **Unit price bid shall not be less than: $ 65.00**	$ 65	00	$ 520	00
70.21DK (050)	180.0 S.Y.	DECKING	$ 75	00	$ 13,500	00
70.31FN (051)	535.0 L.F.	FENCING **Unit price bid shall not be less than: $ 2.00**	$ 4	00	$ 2,140	00
70.51EO (052)	117.0 C.Y.	EXCAVATION OF BOULDERS IN OPEN CUT **Unit price bid shall not be less than: $ 75.00**	$ 75	00	$ 8,775	00

NEW YORK CITY DEPARTMENT OF DESIGN AND CONSTRUCTION
DIVISION OF INFRASTRUCTURE - BUREAU OF DESIGN

Contract PIN 8502012WM0006C
Project ID QED1008

COL. 1 ITEM NUMBER (SEQUENCE NO.)	COL. 2 ENGINEER'S ESTIMATE OF QUANTITIES	COL. 3 CLASSIFICATIONS	COL. 4 UNIT PRICES (IN FIGURES) DOLLARS	CTS	COL. 5 EXTENDED AMOUNTS (IN FIGURES) DOLLARS	CTS
70.52ET (053)	48.0 C.Y.	EXCAVATION OF BOULDERS IN TUNNEL SECTION	$ 300	00	$ 14,400	00
70.54CG (054)	19,270.0 GAL.	FURNISHING AND INJECTING OF CHEMICAL GROUT FOR SOIL STABILIZATION	$ 8	00	$ 154,160	00
70.54GP (055)	1,485.0 L.F.	DRILLING AND INSTALLING OF HORIZONTAL TUBE-A-MANCHETTE GROUT PIPE FOR SOIL STABILIZATION	$ 35	00	$ 51,975	00
70.61RE (056)	10.0 C.Y.	ROCK EXCAVATION	$ 350	00	$ 3,500	00

NEW YORK CITY DEPARTMENT OF DESIGN AND CONSTRUCTION
DIVISION OF INFRASTRUCTURE - BUREAU OF DESIGN

Contract PIN 8502012WM0006C
Project ID QED1008

COL. 1 ITEM NUMBER (SEQUENCE NO.)	COL. 2 ENGINEER'S ESTIMATE OF QUANTITIES	COL. 3 CLASSIFICATIONS	COL. 4 UNIT PRICES (IN FIGURES) DOLLARS	CTS	COL. 5 EXTENDED AMOUNTS (IN FIGURES) DOLLARS	CTS
70.71SB (057)	1.0 C.Y.	STONE BALLAST **Unit price bid shall not be less than: $ 15.00**	$ 75	00	$ 75	00
70.81CB (058)	141.0 C.Y.	CLEAN BACKFILL **Unit price bid shall not be less than: $ 15.00**	$ 45	00	$ 6,345	00
70.91SW12 (059)	120.0 S.F.	FURNISHING AND PLACING SHEETING AND BRACING IN TRENCH FOR WATER MAIN PIPE 12-INCH IN DIAMETER AND LESS	$ 10	00	$ 1,200	00
73.11AB (060)	1.0 C.Y.	ADDITIONAL BRICK MASONRY **Unit price bid shall not be less than: $ 62.50**	$ 200	00	$ 200	00

NEW YORK CITY DEPARTMENT OF DESIGN AND CONSTRUCTION
DIVISION OF INFRASTRUCTURE - BUREAU OF DESIGN

Contract PIN 8502012WM0006C
Project ID QED1008

COL. 1 ITEM NUMBER (SEQUENCE NO.)	COL. 2 ENGINEER'S ESTIMATE OF QUANTITIES	COL. 3 CLASSIFICATIONS	COL. 4 UNIT PRICES (IN FIGURES) DOLLARS	CTS	COL. 5 EXTENDED AMOUNTS (IN FIGURES) DOLLARS	CTS
73.21AC (061)	12.0 C.Y.	ADDITIONAL CONCRETE **Unit price bid shall not be less than: $ 75.00**	$ 250	00	$ 3,000	00
73.31AE0 (062)	13.0 C.Y.	ADDITIONAL EARTH EXCAVATION INCLUDING TEST PITS (ALL DEPTHS) **Unit price bid shall not be less than: $ 22.50**	$ 100	00	$ 1,300	00
73.41AG (063)	17.0 C.Y.	ADDITIONAL SELECT GRANULAR BACKFILL **Unit price bid shall not be less than: $ 15.00**	$ 65	00	$ 1,020	00
73.51AS (064)	100.0 LBS.	ADDITIONAL STEEL REINFORCING BARS **Unit price bid shall not be less than: $ 1.00**	$ 2	00	$ 200	00

NEW YORK CITY DEPARTMENT OF DESIGN AND CONSTRUCTION
DIVISION OF INFRASTRUCTURE - BUREAU OF DESIGN

Contract PIN 8502012WM0006C
Project ID QED1008

COL. 1 ITEM NUMBER (SEQUENCE NO.)	COL. 2 ENGINEER'S ESTIMATE OF QUANTITIES	COL. 3 CLASSIFICATIONS	COL. 4 UNIT PRICES (IN FIGURES) DOLLARS	CTS	COL. 5 EXTENDED AMOUNTS (IN FIGURES) DOLLARS	CTS
76.11CR (065)	1.0 L.S.	CONSTRUCTION REPORT	$ 15,000	00	$ 15,000	00
76.21MR (066)	1.0 L.S.	MONITORING AND POST-CONSTRUCTION REPORT	$ 30,000	00	$ 30,000	00
8.02 B (067)	80.0 L.F.	SPECIAL CARE EXCAVATION AND RESTORATION FOR CURB WORK	$ 80	00	$ 6,400	00
9.04 HW (068)	1.0 F.S.	ALLOWANCE FOR ANTI-FREEZE ADDITIVE IN CONCRETE PRICE BID SHALL BE FOR THE FIXED SUM OF $ 5,000.00	$ 5,000	00	$ 5,000	00

NEW YORK CITY DEPARTMENT OF DESIGN AND CONSTRUCTION
DIVISION OF INFRASTRUCTURE - BUREAU OF DESIGN

Contract PIN 8502012WM0006C
Project ID QED1008

COL. 1 ITEM NUMBER (SEQUENCE NO.)	COL. 2 ENGINEER'S ESTIMATE OF QUANTITIES	COL. 3 CLASSIFICATIONS	COL. 4 UNIT PRICES (IN FIGURES) DOLLARS	CTS	COL. 5 EXTENDED AMOUNTS (IN FIGURES) DOLLARS	CTS
UTL-6.01.8 (069)	3.0 EACH	GAS SERVICES CROSSING TRENCHES AND/OR EXCAVATIONS (S6.01) **Unit price bid shall not be less than: $ 465.00**	$ 465	00	$ 1,395	00
UTL-6.01.9 (070)	2.0 EACH	GAS MAIN CROSSING WATER MAIN UP TO 20" IN DIAMETER (S6.01) **Unit price bid shall not be less than: $ 485.00**	$ 485	00	$ 970	00
UTL-6.03 (071)	100.0 L.F.	REMOVAL OF ABANDONED GAS FACILITIES. ALL SIZES. (S6.03) **Unit price bid shall not be less than: $ 15.00**	$ 15	00	$ 1,500	00
UTL-6.03.1 (072)	100.0 L.F.	REMOVAL OF ABANDONED GAS FACILITIES WITH POSSIBLE COAL TAR WRAP. ALL SIZES. (S6.03) **Unit price bid shall not be less than: $ 25.00**	$ 25	00	$ 2,500	00

NEW YORK CITY DEPARTMENT OF DESIGN AND CONSTRUCTION
DIVISION OF INFRASTRUCTURE - BUREAU OF DESIGN

Contract PIN 8502012WM0006C
Project ID QED1008

COL. 1 ITEM NUMBER (SEQUENCE NO.)	COL. 2 ENGINEER'S ESTIMATE OF QUANTITIES	COL. 3 CLASSIFICATIONS	COL. 4 UNIT PRICES (IN FIGURES) DOLLARS	CTS	COL. 5 EXTENDED AMOUNTS (IN FIGURES) DOLLARS	CTS
UTL-6.04 (073)	3.0 EACH	ADJUST HARDWARE TO GRADE USING SPACER RINGS/ADAPTORS. (STREET REPAVING.) (S6.04) **Unit price bid shall not be less than: $ 35.00**	$ 35	00	$ 105	00
UTL-6.05 (074)	2.0 EACH	ADJUST HARDWARE TO GRADE BY RESETTING. (ROAD RECONSTRUCTION.) (S6.05) **Unit price bid shall not be less than: $ 65.00**	$ 65	00	$ 130	00
UTL-6.06 (075)	150.0 C.Y.	SPECIAL CARE EXCAVATION AND BACKFILLING (S6.06) **Unit price bid shall not be less than: $ 180.00**	$ 180	00	$ 27,000	00
UTL-6.07 (076)	50.0 C.Y.	TEST PITS FOR GAS FACILITIES (S6.07) **Unit price bid shall not be less than: $ 100.00**	$ 100	00	$ 5,000	00

NEW YORK CITY DEPARTMENT OF DESIGN AND CONSTRUCTION
DIVISION OF INFRASTRUCTURE - BUREAU OF DESIGN

Contract PIN 8502012WM0006C
Project ID QED1008

COL. 1 ITEM NUMBER (SEQUENCE NO.)	COL. 2 ENGINEER'S ESTIMATE OF QUANTITIES	COL. 3 CLASSIFICATIONS	COL. 4 UNIT PRICES (IN FIGURES) DOLLARS	CTS	COL. 5 EXTENDED AMOUNTS (IN FIGURES) DOLLARS	CTS
UTL-GCS-2WS (077)	1.0 F.S.	GAS INTERFERENCES AND ACCOMMODATIONS PRICE BID SHALL BE FOR THE FIXED SUM OF $ 25,000.00	$ 25,000	.00	$ 25,000	.00

NEW YORK CITY DEPARTMENT OF DESIGN AND CONSTRUCTION
DIVISION OF INFRASTRUCTURE - BUREAU OF DESIGN

Contract PIN 8502012WM0006C
Project ID QED1008

COL. 1 ITEM NUMBER (SEQUENCE NO.)	COL. 2 ENGINEER'S ESTIMATE OF QUANTITIES	COL. 3 CLASSIFICATIONS	COL. 4 UNIT PRICES (IN FIGURES) DOLLARS	CTS	COL. 5 EXTENDED AMOUNTS (IN FIGURES) DOLLARS	CTS
		SUB-TOTAL:			$ 3,160,029	00
6.39 A (078)	1.0 LUMP SUM	MOBILIZATION PRICE BID SHALL NOT EXCEED 4% OF THE ABOVE SUB-TOTAL PRICE.			$ 120,000	00
		TOTAL BID PRICE:			$ 3,280,029	00

PLEASE BE SURE A LEGIBLE BID IS ENTERED FOR EACH ITEM.

THE BIDDER SHALL INSERT THE TOTAL BID PRICE IN THE BID FORM ON PAGE C-4 OF THIS BID BOOKLET.

SPECIAL NOTICE TO BIDDERS

The New York City Department of Small Business Services (SBS), in conjunction with the New York Business Development Corporation (NYBDC), have established a **NYC Construction Loan** pilot program to provide prime contractors and subcontractors financing for mobilization costs on certain City construction projects.

Under this initiative, loans are available for early stage mobilization needs such as insurance, labor, supplies and equipment. Bidders are strongly encouraged to visit "Growing Your Business" at www.nyc.gov/nycbusiness to learn more about the loan or contact constructionloan@sbs.nyc.gov / (212) 513-6444 to obtain details and to determine preliminary eligibility.

A successful loan applicant will be required to make an assignment of its contract (or subcontract) payments to the lender NYBDC until the loan is repaid. If the loan is to a subcontractor, a prime contractor must honor the terms of such an assignment.

A prime contractor may not discriminate against a subcontractor or potential subcontractor by reason of the subcontractor's participation, or nonparticipation, in the NYC Construction Loan program.

(NO TEXT ON THIS PAGE)

CITY OF NEW YORK

DEPARTMENT OF DESIGN AND CONSTRUCTION DIVISION OF INFRASTRUCTURE

BID BOOKLET

FOR FURNISHING ALL LABOR AND MATERIALS NECESSARY AND REQUIRED FOR:

PROJECT ID: QED1008

FOR THE INSTALLATION OF 60-INCH AND 12-INCH WATER MAINS IN: 54TH STREET BETWEEN FLUSHING AVENUE AND GRAND AVENUE

Together With All Work Incidental Thereto
BOROUGH OF QUEENS

(NO TEXT ON THIS PAGE)

PROJECT ID: QED1008

CITY OF NEW YORK
DEPARTMENT OF DESIGN AND CONSTRUCTION
DIVISION OF INFRASTRUCTURE

BID BOOKLET

TABLE OF CONTENTS

(NO TEXT ON THIS PAGE)

CITY OF NEW YORK
DEPARTMENT OF DESIGN AND CONSTRUCTION
DIVISION OF INFRASTRUCTURE

SPECIAL NOTICE TO BIDDERS

BID SUBMISSION REQUIREMENTS

THE FOLLOWING DOCUMENTS ARE TO BE COMPLETED AND SUBMITTED WITH THE BID:

1. Bid Schedule and Bid Form, including Affirmation
2. Bid Security (if required, see Attachment 1 on Page A-1)
3. M/WBE Subcontractor Utilization Plan (if participation goals have been established)

FAILURE TO SUBMIT ITEMS (1), (2) AND (3)
WILL RESULT IN THE DISQUALIFICATION OF THE BID.

4. Safety Questionnaire
5. Construction Employment Report (if bid is $1,000,000 or more)
6. Contract Certificate (if bid is less than $1,000,000)
7. Confirmation of Vendex Compliance
8. Bidder's Certification of Compliance with Iran Divestment Act
9. Special Experience Requirements (if applicable)
10. Apprenticeship Program Questionnaire (if applicable)

FAILURE TO SUBMIT ITEMS (4) THROUGH (10)
MAY RESULT IN THE DISQUALIFICATION OF THE BID.

NOTES:

(1) All of the above referred to blank forms to be completed and submitted with the bid are included in the BID BOOKLET.

(2) If additional information is required, please contact the Department of Design and Construction at 718-391- 2601.

(3) VENDEX QUESTIONNAIRES: The Bidder is advised that Vendex Questionnaires and procedures have been changed. Vendex Questionnaires, as well as detailed instructions, may be obtained at www.nyc.gov/vendex. The bidder may also obtain Vendex forms and instructions by contacting the Agency Chief Contracting Officer or the contact person for this contract.

(4) SPECIAL EXPERIENCE REQUIREMENTS: The Bidder is advised that Special Experience Requirements may apply to this contract. Such requirements are set forth on pages 3 and 4 of this Bid Booklet.

SPECIAL NOTICE TO BIDDERS

SPECIAL EXPERIENCE REQUIREMENTS (Revised 02/2007)

(A) **EXPERIENCE REQUIREMENTS FOR THE BIDDER**: The bidder must, within the last seven (7) consecutive years prior to the bid opening, have successfully completed in a timely fashion at least one (1) project similar in scope and type to the required work. Such prior project may have been performed as a prime contractor, subcontractor or sub-subcontractor.

The requirements set forth below under Article (B) apply to this contract where indicated by a blackened box (■) or by X in a □ to left.

■ **(B)** **EXPERIENCE REQUIREMENTS FOR INSTALLER OF TRUNK WATER MAIN:** The special experience requirements set forth below apply to the contractor who will install the Trunk Water Main. If the bidder intends to perform such work itself, it must demonstrate compliance with the special experience requirements. If the bidder intends to subcontract this work, the proposed subcontractor must demonstrate compliance with the special experience requirements. Once approved, no substitution will be permitted, unless the qualifications of the proposed replacement have been approved in writing in advance by the City.

(1) The contractor who will install the Trunk Water Main must, within the last seven (7) consecutive years prior to the bid opening, have successfully completed in a timely fashion at least one (1) project similar in scope and type to the required work. Such prior project may have been performed as a prime contractor, subcontractor or sub-subcontractor.

(C) **SUBMISSION REQUIREMENTS:** For each project submitted to meet the experience requirements set forth above, the bidder must complete and submit the Qualification Form set forth in the Bid Booklet. Separate Qualification Forms shall be provided for bidder and the contractor who will install the Trunk Water Main.

(D) **CONDITIONS**: In determining compliance with the special experience requirements for the bidder set forth above, the City may consider prior projects completed by principal(s) or other employees of the bidder while affiliated with another entity, subject to the conditions set forth below.

(1) Any principal or other employee on whose prior experience the bidder is relying to demonstrate compliance with this special experience requirement must have held the following: (a) a significant management role in the prior entity with which he/she was affiliated, and (b) a significant management role in the entity submitting the bid for a period of six months or more from the inception of the bidding entity.

(2) The bidder may not rely on the experience of its principals or other employees to demonstrate compliance with any other requirements, including without limitation, financial requirements or requirements for a specified minimum amount of annual gross revenues.

(E) **JOINT VENTURES**: In the event the bidder is a joint venture, at least one firm in the joint venture must meet the above described experience requirements.

(F) **COMPLIANCE**: Compliance with the experience requirements set forth herein will be determined solely by the City, prior to an award of contract. The bidder is advised that failure to meet the above described experience will result in the rejection of the bid as non-responsive.

Qualification Form

List previous projects completed to meet the special experience requirements for this contract. Please photocopy this form for submission of all required projects.

Name of Contractor: _____

Name of Project: _____

Location of Project: _____

Owner or Owner's representative (Architect or Engineer) who is familiar with the work performed:

Name: _____
Title: _____ Phone Number: _____

Brief description of the Project completed or the Project in progress: _____
_____
_____

Was the Project performed as a prime, a subcontractor or a sub-subcontractor: _____

Amount of Contract, Subcontract or Sub-subcontract: _____

Start Date and Completion Date: _____

****

Name of Contractor: _____

Name of Project: _____

Location of Project: _____

Owner or Owner's representative (Architect or Engineer) who is familiar with the work performed:

Name: _____
Title: _____ Phone Number: _____

Brief description of the Project completed or the Project in progress: _____
_____
_____

Was the Project performed as a prime, a subcontractor or a sub-subcontractor: _____

Amount of Contract, Subcontract or Sub-subcontract: _____

Start Date and Completion Date: _____

(NO TEXT ON THIS PAGE)

ATTACHMENT 1 - BID INFORMATION

PROJECT ID: QED1008
PIN: 8502012WM0006C

Description and Location of Work: For The Installation Of 60-Inch And 12-Inch Water Mains In: 54th Street Between Flushing Avenue And Grand Avenue, Together With All Work Incidental Thereto, Borough Of Queens.

Documents Available At: 30-30 Thomson Avenue
First Floor Bid Procurement Room
Long Island City, New York 11101
8:30 A.M. to 4:00 P.M. - Monday through Friday

Submission of Bids To: 30-30 Thomson Avenue
First Floor Bid Procurement Room
Long Island City, New York 11101
Before 11:00 A.M. on **MAY 9, 2013**

Bid Opening: 30-30 Thomson Avenue
First Floor Bid Procurement Room
Long Island City, New York 11101

Time and Date: 11:00 A.M. on **MAY 9, 2013**

Pre-Bid Conference: Yes _____ No X

If Yes, Mandatory: _____ Optional: _____
Time and Date: _____
Location: _____

Bid Security: Bid Security is required in the amount set forth below; provided, however, bid security is not required if the TOTAL BID PRICE set forth on the Bid Form is less than $1,000,000.00.

(1) Bond in an amount not less than 10% of the TOTAL BID PRICE set forth on the Bid Form, OR
(2) Certified Check in an amount not less than 2% of the TOTAL BID PRICE set forth on the Bid Form.

Performance and Payment Security: Required for contracts in the amount of $1,000,000 or more. Performance Security and Payment Security shall each be in an amount equal to 100% of the Contract Price.

Agency Contact Person: Lorraine Holley
Phone: 718-391-2601 FAX: 718-391-2615

(NO TEXT ON THIS PAGE)

BID SCHEDULE

NOTICE TO BIDDERS

Items listed in this Bid Schedule which have one (1) digit followed by a decimal (e.g. 4.02 AG), excluding items beginning with the number "8.01", shall comply with the requirements of the corresponding numerical Sections of the NYCDOT Standard Highway Specifications as amended by Addendum No. 1 and Addendum No. 2, herein Volume 3 of 3.

Items listed in this Bid Schedule which have two (2) digits beginning with the number "5" followed by a decimal (e.g. 50.31CC15) shall comply with the requirements of the New York City Department of Design and Construction (NYCDDC) Standard Sewer Specifications dated August 1, 2009, as amended by Addendum No. 2, herein Volume 3 of 3.

Items listed in this Bid Schedule which have two (2) digits beginning with the number "6" followed by a decimal (e.g. 60.11R612) shall comply with the requirements of the New York City Department of Environmental Protection (NYCDEP) Standard Water Main Specifications dated August 1, 2009, as amended by Addendum No. 2, herein Volume 3 of 3.

Items listed in this Bid Schedule which have two (2) digits beginning with the number "7" followed by a decimal (e.g. 70.31FN) shall comply with the requirements of the New York City Department of Environmental Protection (NYCDEP) Standard Sewer Specifications dated August 1, 2009, and Standard Water Main Specifications dated August 1, 2009, as amended by Addendum No. 2, herein Volume 3 of 3.

Items listed in this Bid Schedule beginning with the prefix "UTL-" (e.g. UTL-6.01.8) are for Gas Cost Sharing (EP-7) work and shall comply with the requirements of Addendum No. 3, herein Volume 3 of 3.

(NO TEXT ON THIS PAGE)

NEW YORK CITY DEPARTMENT OF DESIGN AND CONSTRUCTION
DIVISION OF INFRASTRUCTURE - BUREAU OF DESIGN

BID SCHEDULE

NOTE: (1) The Agency may reject a bid if it contains unbalanced bid prices. An unbalanced bid is considered to be one containing lump sum or unit items which do not reflect reasonable actual costs plus a reasonable proportionate share of the Bidder's anticipated profit, overhead costs, and other indirect costs, anticipated for the performance of the items in question.

(2) The following bid prices on Unit Price Contracts are to be paid for the actual quantities of the several classes of work in the completed work or structure, and they cover the cost of all work, labor, material, tools, plant and appliances of every description necessary to complete the entire work, as specified, and the removal of all debris, temporary work and appliances.

(3) PLEASE BE SURE A LEGIBLE BID IS ENTERED, IN INK, FOR EACH ITEM. Alterations must be initialed in ink by the bidder.

(4) The Extended Amount entered in Column 5 shall be the product of the Estimated Quantity in Column 2 times the Unit Price Bid in Column 4.

(5) Prospective bidders must examine the Bid Schedule carefully and, before bidding, must advise the Commissioner, in writing, if any pages are missing, and must request that such missing pages be furnished them. The pages of this Bid Schedule are numbered consecutively, as follows: **B - 3 through B - 23**

NEW YORK CITY DEPARTMENT OF DESIGN AND CONSTRUCTION
DIVISION OF INFRASTRUCTURE - BUREAU OF DESIGN

Contract PIN 8502012WM0006C
Project ID **QED1008**

COL. 1 ITEM NUMBER (SEQUENCE NO.)	COL. 2 ENGINEER'S ESTIMATE OF QUANTITIES	COL. 3 CLASSIFICATIONS	COL. 4 UNIT PRICES (IN FIGURES) DOLLARS	CTS	COL. 5 EXTENDED AMOUNTS (IN FIGURES) DOLLARS	CTS
4.02 AF-R (001)	375.0 S.Y.	ASPHALTIC CONCRETE WEARING COURSE, 2" THICK	$	.	$	.
4.02 AG (002)	750.0 S.Y.	ASPHALTIC CONCRETE WEARING COURSE, 3" THICK	$	.	$	.
4.02 CA (003)	158.0 TONS	BINDER MIXTURE	$	.	$	.
4.04 B (004)	25.0 C.Y.	CONCRETE BASE FOR PAVEMENT, VARIABLE THICKNESS FOR TRENCH RESTORATION, CLASS B-32	$	.	$	.

NEW YORK CITY DEPARTMENT OF DESIGN AND CONSTRUCTION
DIVISION OF INFRASTRUCTURE - BUREAU OF DESIGN

Contract PIN 8502012WM0006C
Project ID **QED1008**

COL. 1 ITEM NUMBER (SEQUENCE NO.)	COL. 2 ENGINEER'S ESTIMATE OF QUANTITIES	COL. 3 CLASSIFICATIONS	COL. 4 UNIT PRICES (IN FIGURES) DOLLARS	CTS	COL. 5 EXTENDED AMOUNTS (IN FIGURES) DOLLARS	CTS
4.04 DC (005)	105.0 C.Y.	CONCRETE BASE FOR PAVEMENT, 9" THICK, CLASS B-32	$	.	$	.
4.09 AD (006)	70.0 L.F.	STRAIGHT STEEL FACED CONCRETE CURB (18" DEEP)	$	.	$	.
4.13 AAS (007)	100.0 S.F.	4" CONCRETE SIDEWALK (UNPIGMENTED)	$	.	$	.
4.18 A (008)	1.0 EACH	MAINTENANCE TREE PRUNING (UNDER 12" CAL.)	$	.	$	.

NEW YORK CITY DEPARTMENT OF DESIGN AND CONSTRUCTION
DIVISION OF INFRASTRUCTURE - BUREAU OF DESIGN

Contract PIN 8502012WM0006C
Project ID **QED1008**

COL. 1 ITEM NUMBER (SEQUENCE NO.)	COL. 2 ENGINEER'S ESTIMATE OF QUANTITIES	COL. 3 CLASSIFICATIONS	COL. 4 UNIT PRICES (IN FIGURES) DOLLARS	CTS	COL. 5 EXTENDED AMOUNTS (IN FIGURES) DOLLARS	CTS
4.18 B (009)	1.0 EACH	MAINTENANCE TREE PRUNING (12" TO UNDER 18" CAL.)	$	.	$	.
4.21 (010)	200.0 P/HR	TREE CONSULTANT	$	.	$	.
50.41S6E10 (011)	25.0 L.F.	10" D.I.P. CLASS 56 SANITARY SEWER, ENCASED IN CONCRETE	$	.	$	.
53.11DR (012)	25.0 L.F.	TELEVISION INSPECTION AND DIGITAL AUDIO-VISUAL RECORDING OF SEWERS	$	.	$	.

NEW YORK CITY DEPARTMENT OF DESIGN AND CONSTRUCTION
DIVISION OF INFRASTRUCTURE - BUREAU OF DESIGN

Contract PIN 8502012WM0006C
Project ID **QED1008**

COL. 1 ITEM NUMBER (SEQUENCE NO.)	COL. 2 ENGINEER'S ESTIMATE OF QUANTITIES	COL. 3 CLASSIFICATIONS	COL. 4 UNIT PRICES (IN FIGURES) DOLLARS	CTS	COL. 5 EXTENDED AMOUNTS (IN FIGURES) DOLLARS	CTS
6.02 AAN (013)	250.0 C.Y.	UNCLASSIFIED EXCAVATION	$	.	$	.
6.02 XSCW (014)	643.0 C.Y.	INCREMENTAL COST FOR USING SPECIAL CARE WORK METHODS NEAR (FROM 3 FEET TO 50 FEET) TRANSIT FACILITIES	$	.	$	.
6.25 RS (015)	300.0 S.F.	TEMPORARY SIGNS	$	.	$	.
6.26 (016)	500.0 L.F.	TIMBER CURB	$	.	$	.

NEW YORK CITY DEPARTMENT OF DESIGN AND CONSTRUCTION
DIVISION OF INFRASTRUCTURE - BUREAU OF DESIGN

Contract PIN 8502012WM0006C
Project ID **QED1008**

COL. 1 ITEM NUMBER (SEQUENCE NO.)	COL. 2 ENGINEER'S ESTIMATE OF QUANTITIES	COL. 3 CLASSIFICATIONS	COL. 4 UNIT PRICES (IN FIGURES) DOLLARS	CTS	COL. 5 EXTENDED AMOUNTS (IN FIGURES) DOLLARS	CTS
6.28 AA (017)	50.0 L.F.	LIGHTED TIMBER BARRICADES	$	.	$	.
6.29 TTM (018)	30.0 EACH	TEMPORARY TUBULAR MARKERS	$	.	$	.
6.40 B (019)	12.0 MONTH	ENGINEER'S FIELD OFFICE (TYPE B)	$	.	$	.
6.44 (020)	290.0 L.F.	THERMOPLASTIC REFLECTORIZED PAVEMENT MARKINGS (4" WIDE)	$	.	$	.

NEW YORK CITY DEPARTMENT OF DESIGN AND CONSTRUCTION
DIVISION OF INFRASTRUCTURE - BUREAU OF DESIGN

Contract PIN 8502012WM0006C
Project ID **QED1008**

COL. 1 ITEM NUMBER (SEQUENCE NO.)	COL. 2 ENGINEER'S ESTIMATE OF QUANTITIES	COL. 3 CLASSIFICATIONS	COL. 4 UNIT PRICES (IN FIGURES) DOLLARS	CTS	COL. 5 EXTENDED AMOUNTS (IN FIGURES) DOLLARS	CTS
6.49 (021)	290.0 L.F.	TEMPORARY PAVEMENT MARKINGS (4" WIDE)	$	.	$	.
6.52 (022)	1,040.0 P/HR	UNIFORMED FULL-TIME FLAGPERSON	$	.	$	.
6.53 (023)	290.0 L.F.	REMOVE EXISTING LANE MARKINGS (4" WIDE)	$	.	$	.
6.87 (024)	140.0 EACH	PLASTIC BARRELS	$	.	$	.

NEW YORK CITY DEPARTMENT OF DESIGN AND CONSTRUCTION
DIVISION OF INFRASTRUCTURE - BUREAU OF DESIGN

Contract PIN 8502012WM0006C
Project ID **QED1008**

COL. 1 ITEM NUMBER (SEQUENCE NO.)	COL. 2 ENGINEER'S ESTIMATE OF QUANTITIES	COL. 3 CLASSIFICATIONS	COL. 4 UNIT PRICES (IN FIGURES) DOLLARS	CTS	COL. 5 EXTENDED AMOUNTS (IN FIGURES) DOLLARS	CTS
60.11R612 (025)	66.0 L.F.	FURNISHING AND DELIVERING 12-INCH DUCTILE IRON RESTRAINED JOINT PIPE (CLASS 56)	$	.	$	.
60.12D12 (026)	78.0 L.F.	LAYING 12-INCH DUCTILE IRON PIPE AND FITTINGS	$	.	$	.
60.13M0A24 (027)	1.0 TONS	FURNISHING AND DELIVERING DUCTILE IRON MECHANICAL JOINT 24-INCH DIAMETER AND SMALLER FITTINGS, INCLUDING WEDGE TYPE RETAINER GLANDS	$	.	$	.
60.21SP5T60 (028)	170.0 L.F.	FURNISHING, DELIVERING AND LAYING 60-INCH STRAIGHT STEEL PIPE, 5/8-INCH WALL THICKNESS	$	.	$	.

NEW YORK CITY DEPARTMENT OF DESIGN AND CONSTRUCTION
DIVISION OF INFRASTRUCTURE - BUREAU OF DESIGN

Contract PIN 8502012WM0006C
Project ID **QED1008**

COL. 1 ITEM NUMBER (SEQUENCE NO.)	COL. 2 ENGINEER'S ESTIMATE OF QUANTITIES	COL. 3 CLASSIFICATIONS	COL. 4 UNIT PRICES (IN FIGURES) DOLLARS	CTS	COL. 5 EXTENDED AMOUNTS (IN FIGURES) DOLLARS	CTS
60.22BR5T60 (029)	90.0 L.F.	FURNISHING, DELIVERING AND LAYING 60-INCH STEEL BENDS AND REDUCERS, 5/8-INCH WALL THICKNESS	$	.	$	.
60.25PSO (030)	1,810.0 LBS.	FURNISHING, DELIVERING AND INSTALLING PLATE STEEL OUTLETS ON STEEL PIPE, ACCESS MANHOLE OUTLETS WITH COVERS, AND NUTS AND BOLTS COMPLETE	$	.	$	.
60.29CP (031)	1.0 L.S.	FURNISHING, INSTALLING AND TESTING CORROSION CONTROL AND/OR CATHODIC PROTECTION SYSTEM	$	.	$	.
60.31D12630 (032)	70.0 L.F.	12-INCH DUCTILE IRON PIPE (CLASS 56) WATER MAIN IN JACKED 30-INCH STEEL SLEEVE	$	.	$	.

NEW YORK CITY DEPARTMENT OF DESIGN AND CONSTRUCTION
DIVISION OF INFRASTRUCTURE - BUREAU OF DESIGN

Contract PIN 8502012WM0006C
Project ID **QED1008**

COL. 1 ITEM NUMBER (SEQUENCE NO.)	COL. 2 ENGINEER'S ESTIMATE OF QUANTITIES	COL. 3 CLASSIFICATIONS	COL. 4 UNIT PRICES (IN FIGURES) DOLLARS	CTS	COL. 5 EXTENDED AMOUNTS (IN FIGURES) DOLLARS	CTS
60.31S60672 (033)	80.0 L.F.	60-INCH STEEL PIPE (3/4-INCH WALL THICKNESS) WATER MAIN IN JACKED 72-INCH STEEL SLEEVE	$	.	$	.
63.11MH (034)	1.5 TONS	FURNISHING, DELIVERING AND INSTALLING 36-INCH CAST IRON MANHOLE HEADS AND COVERS	$	.	$	.
63.11MS (035)	10.0 EACH	FURNISHING, DELIVERING AND INSTALLING MANHOLE STEPS TYPE PS2-PF	$	.	$	.
64.11ST (036)	4.0 EACH	WITHDRAWING AND REPLACING HOUSE SERVICES USING SMALLER THAN 1-1/2-INCH SCREW TAPS	$	.	$	.

NEW YORK CITY DEPARTMENT OF DESIGN AND CONSTRUCTION
DIVISION OF INFRASTRUCTURE - BUREAU OF DESIGN

Contract PIN 8502012WM0006C
Project ID **QED1008**

COL. 1 ITEM NUMBER (SEQUENCE NO.)	COL. 2 ENGINEER'S ESTIMATE OF QUANTITIES	COL. 3 CLASSIFICATIONS	COL. 4 UNIT PRICES (IN FIGURES) DOLLARS	CTS	COL. 5 EXTENDED AMOUNTS (IN FIGURES) DOLLARS	CTS
64.12COLT (037)	15.0 L.F.	CUTTING AND OFFSETTING HOUSE SERVICE WATER CONNECTIONS (LESS THAN 3-INCH DIAMETER)	$	.	$	.
65.11BR (038)	30.0 LBS.	FURNISHING, DELIVERING AND INSTALLING BANDS, RODS, WASHERS, ETC., COMPLETE, FOR RESTRAINING JOINTS	$	.	$	.
65.21PS (039)	20.0 L.F.	FURNISHING AND PLACING POLYETHYLENE SLEEVE Unit price bid shall not be less than: $ 0.50	$	.	$	.
65.31FF (040)	5,956.0 S.F.	FURNISHING, DELIVERING AND PLACING FILTER FABRIC Unit price bid shall not be less than: $ 0.10	$	.	$	.

NEW YORK CITY DEPARTMENT OF DESIGN AND CONSTRUCTION
DIVISION OF INFRASTRUCTURE - BUREAU OF DESIGN

Contract PIN 8502012WM0006C
Project ID **QED1008**

COL. 1 ITEM NUMBER (SEQUENCE NO.)	COL. 2 ENGINEER'S ESTIMATE OF QUANTITIES	COL. 3 CLASSIFICATIONS	COL. 4 UNIT PRICES (IN FIGURES) DOLLARS	CTS	COL. 5 EXTENDED AMOUNTS (IN FIGURES) DOLLARS	CTS
65.51PC (041)	10.0 C.Y.	FURNISHING AND PLACING CAST-IN-PLACE CONCRETE CLASS 40 AND PRECAST CONCRETE CLASS 50	$	.	$	.
65.61SS (042)	780.0 LBS.	FURNISHING, DELIVERING AND PLACING STRUCTURAL, REINFORCING AND MISCELLANEOUS STEEL	$	.	$	.
65.71SG (043)	204.0 C.Y.	FURNISHING, DELIVERING AND PLACING SCREENED GRAVEL OR SCREENED BROKEN STONE BEDDING	$	.	$	.
7.13 B (044)	6.0 MONTH	MAINTENANCE OF SITE Unit price bid shall not be less than: $ 7,500.00	$	.	$	.

NEW YORK CITY DEPARTMENT OF DESIGN AND CONSTRUCTION
DIVISION OF INFRASTRUCTURE - BUREAU OF DESIGN

Contract PIN 8502012WM0006C
Project ID **QED1008**

COL. 1 ITEM NUMBER (SEQUENCE NO.)	COL. 2 ENGINEER'S ESTIMATE OF QUANTITIES	COL. 3 CLASSIFICATIONS	COL. 4 UNIT PRICES (IN FIGURES) DOLLARS	CTS	COL. 5 EXTENDED AMOUNTS (IN FIGURES) DOLLARS	CTS
7.36 (045)	285.0 L.F.	PEDESTRIAN STEEL BARRICADES	$	.	$	.
7.88 AA (046)	0.9 L.S.	RODENT INFESTATION SURVEY AND MONITORING Unit price bid shall not be less than: $ 825.00	$	.	$	.
7.88 AB (047)	70.0 EACH	RODENT BAIT STATIONS Unit price bid shall not be less than: $ 60.00	$	.	$	.
7.88 AC (048)	70.0 EACH	BAITING OF RODENT BAIT STATIONS Unit price bid shall not be less than: $ 8.50	$	.	$	.

NEW YORK CITY DEPARTMENT OF DESIGN AND CONSTRUCTION
DIVISION OF INFRASTRUCTURE - BUREAU OF DESIGN

Contract PIN 8502012WM0006C
Project ID **QED1008**

COL. 1 ITEM NUMBER (SEQUENCE NO.)	COL. 2 ENGINEER'S ESTIMATE OF QUANTITIES	COL. 3 CLASSIFICATIONS	COL. 4 UNIT PRICES (IN FIGURES) DOLLARS	CTS	COL. 5 EXTENDED AMOUNTS (IN FIGURES) DOLLARS	CTS
7.88 AD (049)	8.0 BLOCK	WATERBUG BAIT APPLICATIONS Unit price bid shall not be less than: $ 65.00	$	.	$	.
70.21DK (050)	180.0 S.Y.	DECKING	$	.	$	.
70.31FN (051)	535.0 L.F.	FENCING Unit price bid shall not be less than: $ 2.00	$	.	$	.
70.51EO (052)	117.0 C.Y.	EXCAVATION OF BOULDERS IN OPEN CUT Unit price bid shall not be less than: $ 75.00	$	.	$	.

NEW YORK CITY DEPARTMENT OF DESIGN AND CONSTRUCTION
DIVISION OF INFRASTRUCTURE - BUREAU OF DESIGN

Contract PIN 8502012WM0006C
Project ID **QED1008**

COL. 1 ITEM NUMBER (SEQUENCE NO.)	COL. 2 ENGINEER'S ESTIMATE OF QUANTITIES	COL. 3 CLASSIFICATIONS	COL. 4 UNIT PRICES (IN FIGURES) DOLLARS	CTS	COL. 5 EXTENDED AMOUNTS (IN FIGURES) DOLLARS	CTS
70.52ET (053)	48.0 C.Y.	EXCAVATION OF BOULDERS IN TUNNEL SECTION	$	.	$	.
70.61RE (054)	10.0 C.Y.	ROCK EXCAVATION	$	.	$	.
70.71SB (055)	1.0 C.Y.	STONE BALLAST Unit price bid shall not be less than: $ 15.00	$	.	$	.
70.81CB (056)	141.0 C.Y.	CLEAN BACKFILL Unit price bid shall not be less than: $ 15.00	$	.	$	.

NEW YORK CITY DEPARTMENT OF DESIGN AND CONSTRUCTION
DIVISION OF INFRASTRUCTURE - BUREAU OF DESIGN

Contract PIN 8502012WM0006C
Project ID **QED1008**

COL. 1 ITEM NUMBER (SEQUENCE NO.)	COL. 2 ENGINEER'S ESTIMATE OF QUANTITIES	COL. 3 CLASSIFICATIONS	COL. 4 UNIT PRICES (IN FIGURES) DOLLARS	CTS	COL. 5 EXTENDED AMOUNTS (IN FIGURES) DOLLARS	CTS
70.91SW12 (057)	120.0 S.F.	FURNISHING AND PLACING SHEETING AND BRACING IN TRENCH FOR WATER MAIN PIPE 12-INCH IN DIAMETER AND LESS	$	.	$	.
73.11AB (058)	1.0 C.Y.	ADDITIONAL BRICK MASONRY Unit price bid shall not be less than: $ 62.50	$	.	$	.
73.21AC (059)	12.0 C.Y.	ADDITIONAL CONCRETE Unit price bid shall not be less than: $ 75.00	$	.	$	.
73.31AE0 (060)	13.0 C.Y.	ADDITIONAL EARTH EXCAVATION INCLUDING TEST PITS (ALL DEPTHS) Unit price bid shall not be less than: $ 22.50	$	.	$	.

NEW YORK CITY DEPARTMENT OF DESIGN AND CONSTRUCTION
DIVISION OF INFRASTRUCTURE - BUREAU OF DESIGN

Contract PIN 8502012WM0006C
Project ID **QED1008**

COL. 1 ITEM NUMBER (SEQUENCE NO.)	COL. 2 ENGINEER'S ESTIMATE OF QUANTITIES	COL. 3 CLASSIFICATIONS	COL. 4 UNIT PRICES (IN FIGURES) DOLLARS	CTS	COL. 5 EXTENDED AMOUNTS (IN FIGURES) DOLLARS	CTS
73.41AG (061)	17.0 C.Y.	ADDITIONAL SELECT GRANULAR BACKFILL Unit price bid shall not be less than: $ 15.00	$	.	$	.
73.51AS (062)	100.0 LBS.	ADDITIONAL STEEL REINFORCING BARS Unit price bid shall not be less than: $ 1.00	$	.	$	.
76.11CR (063)	0.9 L.S.	CONSTRUCTION REPORT	$	.	$	.
76.21MR (064)	0.9 L.S.	MONITORING AND POST-CONSTRUCTION REPORT	$	.	$	.

NEW YORK CITY DEPARTMENT OF DESIGN AND CONSTRUCTION
DIVISION OF INFRASTRUCTURE - BUREAU OF DESIGN

Contract PIN 8502012WM0006C
Project ID **QED1008**

COL. 1 ITEM NUMBER (SEQUENCE NO.)	COL. 2 ENGINEER'S ESTIMATE OF QUANTITIES	COL. 3 CLASSIFICATIONS	COL. 4 UNIT PRICES (IN FIGURES) DOLLARS	CTS	COL. 5 EXTENDED AMOUNTS (IN FIGURES) DOLLARS	CTS
8.02 B (065)	80.0 L.F.	SPECIAL CARE EXCAVATION AND RESTORATION FOR CURB WORK	$	.	$	.
9.04 HW (066)	0.9 F.S.	ALLOWANCE FOR ANTI-FREEZE ADDITIVE IN CONCRETE **PRICE BID SHALL BE FOR THE FIXED SUM OF $ 5,000.00**	$ 5,000	.00	$ 5,000	.00
UTL-6.01.8 (067)	3.0 EACH	GAS SERVICES CROSSING TRENCHES AND/OR EXCAVATIONS (S6.01) Unit price bid shall not be less than: $ 465.00	$	.	$	.
UTL-6.01.9 (068)	2.0 EACH	GAS MAIN CROSSING WATER MAIN UP TO 20" IN DIAMETER (S6.01) Unit price bid shall not be less than: $ 485.00	$	.	$	.

NEW YORK CITY DEPARTMENT OF DESIGN AND CONSTRUCTION
DIVISION OF INFRASTRUCTURE - BUREAU OF DESIGN

Contract PIN 8502012WM0006C
Project ID **QED1008**

COL. 1 ITEM NUMBER (SEQUENCE NO.)	COL. 2 ENGINEER'S ESTIMATE OF QUANTITIES	COL. 3 CLASSIFICATIONS	COL. 4 UNIT PRICES (IN FIGURES) DOLLARS	CTS	COL. 5 EXTENDED AMOUNTS (IN FIGURES) DOLLARS	CTS
UTL-6.03 (069)	100.0 L.F.	REMOVAL OF ABANDONED GAS FACILITIES. ALL SIZES. (S6.03) **Unit price bid shall not be less than: $ 15.00**	$	.	$	.
UTL-6.03.1 (070)	100.0 L.F.	REMOVAL OF ABANDONED GAS FACILITIES WITH POSSIBLE COAL TAR WRAP. ALL SIZES. (S6.03) **Unit price bid shall not be less than: $ 25.00**	$	.	$	.
UTL-6.04 (071)	3.0 EACH	ADJUST HARDWARE TO GRADE USING SPACER RINGS/ADAPTORS. (STREET REPAVING.) (S6.04) **Unit price bid shall not be less than: $ 35.00**	$	.	$	.
UTL-6.05 (072)	2.0 EACH	ADJUST HARDWARE TO GRADE BY RESETTING. (ROAD RECONSTRUCTION.) (S6.05) **Unit price bid shall not be less than: $ 65.00**	$	.	$	.

NEW YORK CITY DEPARTMENT OF DESIGN AND CONSTRUCTION
DIVISION OF INFRASTRUCTURE - BUREAU OF DESIGN

Contract PIN 8502012WM0006C
Project ID **QED1008**

COL. 1 ITEM NUMBER (SEQUENCE NO.)	COL. 2 ENGINEER'S ESTIMATE OF QUANTITIES	COL. 3 CLASSIFICATIONS	COL. 4 UNIT PRICES (IN FIGURES) DOLLARS	CTS	COL. 5 EXTENDED AMOUNTS (IN FIGURES) DOLLARS	CTS
UTL-6.06 (073)	150.0 C.Y.	SPECIAL CARE EXCAVATION AND BACKFILLING (S6.06) **Unit price bid shall not be less than: $ 180.00**	$	.	$	.
UTL-6.07 (074)	50.0 C.Y.	TEST PITS FOR GAS FACILITIES (S6.07) **Unit price bid shall not be less than: $ 100.00**	$	.	$	.
UTL-GCS-2WS (075)	1.0 F.S.	GAS INTERFERENCES AND ACCOMMODATIONS **PRICE BID SHALL BE FOR THE FIXED SUM OF $ 25,000.00**	$ 25,000	.00	$ 25,000	.00

NEW YORK CITY DEPARTMENT OF DESIGN AND CONSTRUCTION
DIVISION OF INFRASTRUCTURE - BUREAU OF DESIGN

Contract PIN 8502012WM0006C
Project ID **QED1008**

COL. 1 ITEM NUMBER (SEQUENCE NO.)	COL. 2 ENGINEER'S ESTIMATE OF QUANTITIES	COL. 3 CLASSIFICATIONS	COL. 4 UNIT PRICES (IN FIGURES) DOLLARS	CTS	COL. 5 EXTENDED AMOUNTS (IN FIGURES) DOLLARS	CTS
		SUB-TOTAL:			$	
6.39 A (076)	0.9 LUMP SUM	MOBILIZATION PRICE BID SHALL NOT EXCEED 4% OF THE ABOVE SUB-TOTAL PRICE.			$	
		TOTAL BID PRICE:			$	

PLEASE BE SURE A LEGIBLE BID IS ENTERED FOR EACH ITEM.

THE BIDDER SHALL INSERT THE TOTAL BID PRICE IN THE BID FORM ON PAGE C-4 OF THIS BID BOOKLET.

BID FORM
THE CITY OF NEW YORK
DEPARTMENT OF DESIGN AND CONSTRUCTION
DIVISION OF INFRASTRUCTURE

BID FOR FURNISHING ALL LABOR AND MATERIAL NECESSARY AND REQUIRED FOR:

PROJECT ID: QED1008

FOR THE INSTALLATION OF 60-INCH AND 12-INCH WATER MAINS IN: 54TH STREET BETWEEN FLUSHING AVENUE AND GRAND AVENUE

Together With All Work Incidental Thereto
BOROUGH OF QUEENS

Name of Bidder: _____

Date of Bid Opening: _____

Bidder is: (Check one, whichever applies) Individual ( ) Partnership ( ) Corporation ( )

Place of Business of Bidder: _____

Bidder's Telephone Number: _____ Fax Number: _____

Bidder's E-Mail Address: _____

Residence of Bidder (If Individual): _____

If Bidder is a Partnership, fill in the following blanks:

Names of Partners	Residence of Partners
_____	_____
_____	_____
_____	_____

If Bidder is a Corporation, fill in the following blanks:

Organized under the laws of the State of _____

Name and Home Address of President: _____

_____

Name and Home Address of Secretary: _____

_____

Name and Home Address of Treasurer: _____

BID FORM

The above-named Bidder affirms and declares:

1. The said bidder is of lawful age and the only one interested in this bid; and no person, firm or corporation other than hereinbefore named has any interest in this bid, or in the Contract proposed to be taken.

2. By submission of this bid, each bidder and each person signing on behalf of any bidder certifies, and in the case of a joint bid each party thereto certifies as to its own organization, under penalty of perjury, that to the best of its knowledge and belief: (1) the prices in this bid have been arrived at independently without collusion, consultation, communication or agreement, for the purpose of restricting competition, as to any matter relating to such prices with any other bidder or with any competitor; (2) unless otherwise required by law, the prices quoted in this bid have not been knowingly disclosed by the bidder and will not knowingly be disclosed by the bidder prior to opening, directly or indirectly, to any other bidder or to any competitor; and (3) No attempt has been made or will be made by the bidder to induce any other person, partnership or corporation to submit or not to submit a bid for the purpose of restricting competition.

3. No councilman or other officer or employee or person whose salary is payable in whole or in part from the City Treasury is directly or indirectly interested in this bid, or in the supplies, materials, equipment, work or labor to which it relates, or in any of the profits thereof.

4. The bidder is not in arrears to the City of New York upon debt or contract or taxes, and is not a defaulter, as surety or otherwise, upon any obligation of the City of New York, and has not been declared not responsible, or disqualified, by any agency of the City of New York or State of New York, nor is there any proceeding pending relating to the responsibility or qualification of the bidder to receive public contracts except as set forth on the Affirmation included as page C-6 of this Bid Booklet.

The bidder hereby affirms that it has paid all applicable City income, excise and other taxes for all years it has conducted business activities in New York City.

5. The bidder, as an individual, or as a member, partner, director or officer of the bidder, if the same be a firm, partnership or corporation, executes this document expressly warranting and representing that should this bid be accepted by the City and the Contract awarded to him, he and his subcontractors engaged in the performance: (1) will comply with the provisions of Section 6-108 of the Administrative Code of the City of New York and the non-discrimination provisions of Section 220a of the New York State Labor Law, as more expressly and in detail set forth in the Agreement; (2) will comply with Section 6-109 of the Administrative Code of the City of New York in relation to minimum wages and other stipulations as more expressly and in detail set forth in the Agreement; (3) have complied with the provisions of the aforesaid laws since their respective effective dates, and (4) will post notices to be furnished by the City, setting forth the requirements of the aforesaid laws in prominent and conspicuous places in each and every plant, factory, building and structure where employees engaged in the performance of the Contract can readily view it, and will continue to keep such notices posted until the supplies, materials and equipment, or work labor and services required to be furnished or rendered by the

Contractor have been finally accepted by the City. In the event of any breach or violation of the foregoing, the Contractor may be subject to damages, liquidated or otherwise, cancellation of the Contract and suspension as a bidder for a period of three years. (The words, "the bidder", "he", "his", and "him" where used herein shall mean the individual bidder, firm, partnership or corporation executing this bid).

6. Compliance Report

The bidder, as an individual, or as a member, partner, director, or officer of the bidder, if the same be a firm, partnership, or corporation, (1) represents that his attention has been specifically drawn to Executive Order No. 50, dated, April 25, 1980, on Equal Employment Compliance of the contract, and (2) warrants that he will comply with the provisions of Executive Order No. 50. The Employment Report must be submitted as part of the bid.

The bidder, as an individual, or as a member, partner, director, or officer of the bidder, if the same be a firm, partnership, or corporation, executes this document expressly warranting that he will comply with: (1) the provision of the contract on providing records, Chapter 8.

7. By submission of this bid, the bidder certifies that it now has and will continue to have the financial capability to fully perform the work required for this contract. Any award of this contract will be made in reliance upon such certification. Upon request therefor, the bidder will submit written verification of such financial capability in a form that is acceptable to the department.

8. In accordance with Section 165 of the State Finance Law, the bidder agrees that tropical hardwoods, as defined in Section 165 of the State Finance Law, shall not be utilized in the performance of this Contract, except as the same are permitted by the foregoing provision of law.

9. The bidder has visited and examined the site of the work and has carefully examined the Contract in the form approved by the Corporation Counsel, and will execute the Contract and perform all its items, covenants and conditions, and will provide, furnish and deliver all the work, materials, supplies, tools and appliances for all labor and materials necessary or required for the hereinafter named work, all in strict conformity with the Contract, for the prices set forth in the Bid Schedule:

(NO TEXT ON THIS PAGE)

BID FORM

PROJECT ID: QED1008

TOTAL BID PRICE: In the space provided below, the Bidder shall indicate its Total Bid Price in figures. Such Total Bid Price is set forth on the final page of the Bid Schedule.

TOTAL BID PRICE: $ _____
(a/k/a BID PROPOSAL)

BIDDER'S SIGNATURE AND AFFIDAVIT

WARNING!!! If M/WBE goals have been established for this Contract, you MUST complete and submit the Affirmations on the 2nd page of the Subcontractor Utilization Plan (or a pre-approved waiver) at the time you submit your bid. Failure to comply will result in the rejection of your bid.

Bidder: _____

By: _____
(Signature of Partner or corporate officer)

_____

Attest: Secretary of Corporate Bidder
(Corporate Seal)

Affidavit on the following page should be subscribed
and sworn to before a Notary Public

BID FORM (TO BE NOTARIZED)

AFFIDAVIT WHERE BIDDER IS AN INDIVIDUAL

STATE OF NEW YORK, COUNTY OF _____ ss:

_____ being duly sworn says:
I am the person described in and who executed the foregoing bid, and the several matters therein stated are in all respects true.

_____
(Signature of the person who signed the Bid)

Subscribed and sworn to before me this
_____ day of _____, _____

_____
Notary Public

AFFIDAVIT WHERE BIDDER IS A PARTNERSHIP

STATE OF NEW YORK, COUNTY OF _____ ss:

_____ being duly sworn says:
I am a member of _____ the firm described in and which executed the foregoing bid. I subscribed the name of the firm thereto on behalf of the firm, and the several matters therein stated are in all respects true.

_____
(Signature of Partner who signed the Bid)

Subscribed and sworn to before me this
_____ day of _____, _____

_____
Notary Public

AFFIDAVIT WHERE BIDDER IS A CORPORATION

STATE OF NEW YORK, COUNTY OF _____ ss:

_____ being duly sworn says:
I am the _____ of the above named corporation whose name is subscribed to and which executed the foregoing bid. I reside at _____
I have knowledge of the several matters therein stated, and they are in all respects true.

_____
(Signature of Partner who signed the Bid)

Subscribed and sworn to before me this
_____ day of _____, _____

_____
Notary Public

AFFIRMATION

The undersigned bidder affirms and declares that said bidder is not in arrears to the City of New York upon debt, contract or taxes and is not a defaulter, as surety or otherwise, upon obligation to the City of New York, and has not been declared not responsible, or disqualified, by any agency of the City of New York, nor is there any proceeding pending relating to the responsibility or qualification of the bidder to receive public contracts except: _____

_____

(If none, the bidder shall insert the word "None" in the space provided above.)

Full Name of Bidder: _____

Address: _____

City _____ State _____ Zip Code _____

CHECK ONE BOX AND INCLUDE APPROPRIATE NUMBER:

/__/ A - Individual or Sole Proprietorship*
SOCIAL SECURITY NUMBER

- - - - - - - - - - - -

B - Partnership, Joint Venture or other unincorporated organization
/__/ EMPLOYER IDENTIFICATION NUMBER

- - - - - - - - - - - -

C- Corporation
/__/ EMPLOYER IDENTIFICATION NUMBER

- - - - - - - - - - - -

By:_____
Signature

Title:_____

If a corporation, place seal here

This affirmation must be signed by an officer or duly authorized representative.

*Under the Federal Privacy Act the furnishing of Social Security Numbers by bidders on City contracts is voluntary. Failure to provide a Social Security Number will not result in a bidder's disqualification. Social Security Numbers will be used to identify bidders, proposers or vendors to ensure their compliance with laws, to assist the City in enforcement of laws, as well as to provide the City a means of identifying of businesses which seek City contracts.

(NO TEXT ON THIS PAGE)

BID BOND 1
FORM OF BID BOND

KNOW ALL MEN BY THESE PRESENTS. That we,_____

_____

_____

hereinafter referred to as the "Principal", and _____

_____

_____

_____

hereinafter referred to as the "Surety" are held and firmly bound to THE CITY OF NEW YORK, hereinafter referred to as the "CITY", or to its successors and assigns in the penal sum of _____

_____

($_____), Dollars lawful money of the United States, for the payment of which said sum of money well and truly to be made, we, and each of us, bind ourselves, our heirs, executors, administrators, successors and assigns, jointly and severally, firmly by these presents.

Whereas, the Principal is about to submit (or has submitted) to the City the accompanying proposal, hereby made a part hereof, to enter into a contract in writing for _____

_____

_____

NOW, THEREFORE, the conditions of this obligation are such that if the Principal shall not withdraw said Proposal without the consent of the City for a period of forty-five (45) days after the opening of bids and in the event of acceptance of the Principal's Proposal by the City, if the Principal shall:

(a) Within ten (10) days after notification by the City, execute in quadruplicate and deliver to the City all the executed counterparts of the Contract in the form set forth in the Contract Documents, in accordance with the proposal as accepted, and

(b) Furnish a performance bond and separate payment bond, as may be required by the City, for the faithful performance and proper fulfillment of such Contract, which bonds shall be satisfactory in all respects to the City and shall be executed by good and sufficient sureties, and

(c) In all respects perform the agreement created by the acceptance of said Proposal as provided in the Information for Bidders, bound herewith and made a part hereof, or if the City shall reject the aforesaid Proposal, then this obligation shall be null and void; otherwise to remain in full force and effect.

BID BOND 2

In the event that the Proposal of the Principal shall be accepted and the Contract be awarded to him the Surety hereunder agrees subject only to the payment by the Principal of the premium therefore, if requested by the City, to write the aforementioned performance and payment bonds in the form set forth in the Contract Documents.

It is expressly understood and agreed that the liability of the Surety for any and all claims hereunder shall in no event exceed the penal amount of this obligation as herein stated.

There shall be no liability under this bond if, in the event of the acceptance of the Principal's Proposal by the City, either a performance bond or payment bond, or both, shall not be required by the City on or before the 30th day after the date on which the City signs the Contract.

The surety, for the value received, hereby stipulates and agrees that the obligations of the Surety and its bond shall in no way be impaired or affected by any postponements of the date upon which the City will receive or open bids, or by any extensions of the time within which the City may accept the Principal's Proposal, or by any waiver by the City of any of the requirements of the Information for Bidders, and the Surety hereby waives notice of any such postponements, extensions, or waivers.

IN WITNESS WHEREOF, the Principal and the Surety have hereunto set their hands and seals and such of them as are corporations have caused their corporate seals to be hereto affixed and these presents to be signed by their proper officers the _____ day of _____, _____.

(Seal) _____(L.S.)
Principal

By: _____

(Seal) _____
Surety

By: _____

BID BOND 3

ACKNOWLEDGMENT OF PRINCIPAL, IF A CORPORATION

State of _____ County of _____ ss:
On this _____ day of _____, _____, before me personally came
_____ to me known, who, being by me duly sworn, did depose and say
that he resides at_____
that he is the _____ of _____
the corporation described in and which executed the foregoing instrument; that he knows the seal of said corporation; that one of the seals affixed to said instrument is such seal; that it was so affixed by order of the directors of said corporation, and that he signed his name thereto by like order.

_____
Notary Public

ACKNOWLEDGMENT OF PRINCIPAL, IF A PARTNERSHIP

State of _____ County of _____ ss:
On this _____ day of _____, _____, before me personally appeared
_____ to me known and known to me to be one of the members of the
firm of _____described in and who executed the foregoing instrument, and he acknowledged to me that he executed the same as and for the act and deed of said firm.

_____
Notary Public

ACKNOWLEDGMENT OF PRINCIPAL, IF AN INDIVIDUAL

State of _____ County of _____ ss:
On this _____ day of _____, _____, before me personally appeared
_____ to me known and known to me to be the person described in and who executed the foregoing instrument and acknowledged that he executed the same.

_____
Notary Public

AFFIX ACKNOWLEDGMENTS AND JUSTIFICATION OF SURETIES

(NO TEXT ON THIS PAGE)

M/WBE PROGRAM

SUBCONTRACTOR UTILIZATION PLAN - SCHEDULE B

Subcontractor Utilization Plan (Schedule B): The Subcontractor Utilization Plan (Schedule B) for this Contract is set forth on the following pages of this Bid Booklet. The Subcontractor Utilization Plan (Part I) indicates whether participation goals have been established for this Contract. If participation goals have been established for this Contract, the bidder must submit a Subcontractor Utilization Plan (Part II) with its bid.

Contract Provisions: Contract provisions regarding the participation of MWBE firms are set forth in Article 77 of the Contract. The bidder is advised to review these contract provisions.

Waiver: The bidder may seek a full or partial pre-award waiver of the Target Subcontracting Percentage in accordance with Article 77 of the Contract (See Part A, Section 10). The bidder's request for a waiver must be submitted at least seven (7) calendar days prior to the bid date. Waiver requests submitted after the deadline will not be considered. The form for requesting a waiver of the Target Subcontracting Percentage is set forth in the Subcontractor Utilization Plan (Part III).

Rejection of the Bid: The bidder must complete the Subcontractor Utilization Plan (Part II) set forth on the following pages. Subcontractor Utilization Plans which do not include the required affirmations will be deemed to be non-responsive, unless a full waiver of the Target Subcontracting Percentage is granted (Subcontractor Utilization Plan, Part III). In the event that the City determines that the bidder has submitted a Subcontractor Utilization Plan where the required affirmations are completed but other aspects of the Plan are not complete, or contain a copy or computation error that is at odds with the affirmation, the bidder will be notified by the Agency and will be given four (4) calendar days from receipt of notification to cure the specified deficiencies and return a completed plan to the Agency. Failure to do so will result in a determination that the Bid is non-responsive. Receipt of notification is defined as the date notice is emailed or faxed (if the bidder has provided an email address or fax number), or no later than five (5) days from the date of mailing or upon delivery, if delivered.

Impact on LBE Requirements: If goals have been established for the participation of M/WBEs, the contractor is not required to comply with the Locally Based Enterprise Program ("LBE"). The LBE Program is set forth in Article 67 of the Contract.

Tax ID #: _____

PIN #: 8502012WM0006C

THE CITY OF NEW YORK

SCHEDULE B - Subcontractor Utilization Plan - Part I: Agency's Target

This page to be completed by contracting agency

Contract Overview

Pin #: 8502012WM0006C **FMS Project ID #:** QED-1008

Project Title: INSTALLATION OF 60 INCH AND 12 INCH WATER MAINS

Contracting Agency: Department of Design and Construction

Agency Address: 30-30 Thomson Ave **City** Long Island City **State** NY **Zip Code** 11101

Contact Person: Diana A. Benjamin **Title** MWBE Liaison & Compliance Analyst

Telephone #: (718) 391-3470 **Email:** BenjamiDi@ddc.nyc.gov

Project Description *(attach additional pages if necessary)*

PROJECT ID: QED1008

FOR THE INSTALLATION OF 60-INCH AND 12-INCH WATER MAINS IN: 54TH STREET BETWEEN FLUSHING AVENUE AND GRAND AVENUE

Together With All Work Incidental Thereto
BOROUGH OF QUEENS
CITY OF NEW YORK

(1) √ Target Subcontracting Percentage
Percentage of total contract dollar value that agency estimates will be awarded to subcontractors in amounts under $1 million for construction and professional services. 4 %

Subcontractor Participation Goals*
Complete and enter total for each Construction or Professional Services, or both (if applicable)

Group	Construction	Professional Services
Black American	Unspecified %	0 %
Hispanic American	Unspecified %	0 %
Asian American	Unspecified %	No Goal
Caucasian Female	No Goal %	0 %
Total Participation Goals	**(2) 100 %**	**(3) 0 %**

**Note: For this procurement, individual ethnicity and gender goals are not specified. The Total Participation Goals for construction subcontracts may be met by using Black American, Hispanic American or Asian American firms or any combination of such firms.*

Tax ID #:_____ PIN #: 8502012WM0006C

SCHEDULE B - Subcontractor Utilization Plan - Part II: Bidder/Proposer Subcontracting Plan

This page and the next (Part II herein) are to be completed by the bidder/proposer. AFFIRMATIONS; Bidder/proposer must check the applicable boxes below, affirming compliance with M/WBE requirements.

Bidder/proposer ☐ AFFIRMS or ☐ DOES NOT AFFIRM [statement below]

It is a material term of the contract to be awarded that, with respect to the total amount of the contract to be awarded, bidder/proposer will award one or more subcontracts for amounts under one million dollars, sufficient to meet or exceed the Target Subcontracting Percentage (as set forth in Part I) unless it obtains a full or partial waiver thereof, and it will award subcontracts sufficient to meet or exceed the Total Participation Goals (as set forth in Part I) unless such goals are modified by the Agency.

Bidder/proposer ☐ AFFIRMS that it intends to meet or exceed the Target Subcontracting Percentage (as set forth in Part I); or

☐ AFFIRMS that it has obtained a full/partial pre-award waiver of the Target Subcontracting Percentage (as set forth in Part I) and intends to award the modified Target Subcontracting Percentage, if any; or

☐ DOES NOT AFFIRM

Section I: Prime Contractor Contact Information

Tax ID # _____ **FMS Vendor ID #** _____

Business Name _____ **Contact Person** _____

Address _____

Telephone # _____ **E-mail** _____

Section II: General Contract Information

1. **Define the industry in which work is to be performed.**
   - **Construction** includes all contracts for the construction, rehabilitation, and/or renovation of physical structures. This category does include CM Build as well as other construction related services such as: demolition, asbestos and lead abatement, and painting services, carpentry services, carpet installation and removal, where related to new construction and not maintenance. This category does not include standard services which may be associated with construction projects but which do not constitute construction, such as trucking, site protection, site security, site surveying, soil testing, extermination, and maintenance/operations.
   - **Professional Services** are a class of services that typically require the provider to have some specialized field or advanced degree. Services of this type include: legal, management consulting, information technology, accounting, auditing, actuarial, advertising, health services, pure construction management, environmental analysis, scientific testing, architecture and engineering, and traffic studies, and similar services.

   a. Type of work on Prime Contract *(Check one)*:

   ☐ **Construction** ☐ **Professional Services**

   b. Type of work on Subcontract *(Check all that apply)*:

   ☐ **Construction** ☐ **Professional Services** ☐ **Other**

2. **What is the expected percentage of the total contract dollar value that you expect to award to all subcontracts?** _____%

3. **Will you award subcontract(s) in amounts below $ 1 million for construction and/or professional Services contracts within the first 12 months of the notice to proceed on the contract?** ☐ **Yes** ☐ **No**

Section III: Subcontractor Utilization Summary

IMPORTANT: ***If you do not anticipate that you will subcontract at the target level the agency has specified, because you will perform more of the work yourself, you must seek a waiver of the Target Subcontracting Percentage by completing p.9).***

Step 1: Calculate the percentage (of your total bid) that will go towards subcontracts under $ 1M for construction and/or Professional services	**Subcontracts under $1M (4) (construction/professional services)**		**Total Bid/Proposal Value**		**Calculated Target Subcontracting Percentage**
	$ _____	÷	$ _____	X 100 =	_____%

- **Subcontracts under $1M (construction/professional services):** Enter the value you expect to award to subcontractors in dollars for amounts under $1 million for construction and/or professional services. This value defines the amount that participation goals apply to, and will be entered into the first line of Step 2.
- **Total Bid/Proposal Value:** Provide the dollar amount of the bid/proposal.
- **Calculated Target Subcontracting Percentage:** The percentage of the total contract dollar value that will be awarded to one or more subcontractors for amounts under $1 million for construction and/or professional services. **This percentage must equal or exceed the percentage listed by the agency on page 6, at line (1).**

NOTE: The "Calculated Target Subcontracting Percentage" MUST equal or exceed the Target Subcontracting Percentage listed by the agency on Page 6, Line (1).

Tax ID #:_____ PIN #: 8502012WM0006C

SCHEDULE B - Subcontractor Utilization Plan - Part II: Bidder/Proposer Subcontracting Plan - cont.

Step 2:
Calculate value of subcontractor participation goals

		Subcontracts under $1M (construction/professional services)	
a.	Copy value from Step 1, line (4) – the total value of all expected subcontracts Under $1M for construction and/or professional services	$	
b.	• From line a. above, allocate the dollar value of "Subcontracts Under $1M" by Construction and Professional Services. • If all subcontracts under $1M are in one industry, enter "0" for the industry with no subcontracts. • Amounts listed on these lines should add up to the value from line a.	Construction	Professional Services
	Subcontracts under $1M by industry	$	$
	• For Construction enter percentage from line (2) from Page 6. • For Professional Services enter percentage from line (3) from Page 6.		
c.	• Total Participation Goals Percentages must be copied from Part I, lines (2) and (3).		
	Total Participation Goals	x ____ %	x ____ %
d.	Value of Total Participation Goals	$	$

Step 3:

√ Subcontracts in Amounts Under $1 M Scope of Work - Construction

Enter brief description of type(s) of subcontracts in amounts under $1M anticipated, by Type of work, not by name of subcontractor

:

√ Subcontracts in Amounts Under $1 M Scope of Work - Professional Services

Enter brief description of type(s) of subcontracts in amounts under $1M anticipated, by Type of work, not by name of subcontractor

Section IV: Vendor Certification and Required Affirmations

I hereby 1) acknowledge my understanding of the M/WBE requirements as set forth herein and the pertinent provisions of Local Law 129 of 2005, and the rules promulgated thereunder; 2) affirm that the information supplied in support of this subcontractor utilization plan is true and correct; 3) agree, if awarded this Contract, to comply with the M/WBE requirements of this Contract and the pertinent provisions of Local Law 129 of 2005, and the rules promulgated thereunder, all of which shall be deemed to be material terms of this contract; 4) agree and affirm that it is a material term of this contract that the Vendor will award subcontract(s) sufficient to meet the Target Subcontracting Percentage, unless a waiver is obtained, and the Vendor will award subcontract(s) sufficient to meet the Total Participation Goals unless such goals are modified by the Agency; and 5) agree and affirm, if awarded this contract the Vendor intends to make all reasonable, good faith efforts to meet the Target Subcontracting Percentage, or If the Vendor has obtained a waiver, the Vendor intends to meet the modified Target Subcontracting Percentage, if any , and the Vendor intends to to solicit and obtain the participation of M/WBEs so as to meet the Total Participation Goals unless modified by the Agency.

Signature _____ Date _____

Print Name _____ Title _____

SCHEDULE B - PART III - REQUEST FOR WAIVER OF TARGET SUBCONTRACTING PERCENTAGE

Contract Overview

Tax ID # _____ FMS Vendor ID # _____

Business Name _____

Contact Name _____ Telephone # _____ Email _____

Type of Procurement ☐ Competitive Sealed Bids ☐ Other Bid/Response Due Date _____

PIN # (for this procurement) _____

Type of work on Prime Contract *(Check one)*:
☐ Construction
☐ Professional Services

Type of work on Subcontract *(Check all that apply)*:
☐ Construction ☐ Other
☐ Professional Services

SUBCONTRACTING as *described in bid/solicitation documents (Copy this % figure from the solicitation)*

_____ % of the total contract value anticipated by the agency to be subcontracted for construction/professional services subcontracts valued below $1 million (each)

ACTUAL SUBCONTRACTING as *anticipated by vendor seeking waiver*

_____ % of the total contract value anticipated in good faith by the bidder/proposer to be subcontracted for construction/professional services subcontracts valued below $1 million (each)

Basis for Waver Request: *Check appropriate box & explain in detail below (attach additional pages if needed)*

☐ Vendor does not subcontract construction/professional services, and has the capacity and good faith intention to perform all such work itself.

☐ Vendor subcontracts *some* of this type of work but at *lower* % than bid/solicitation describes, and has the capacity and good faith intention to do so on this contract.

☐ Other _____

References

List 3 most recent contracts/subcontracts performed for NYC agencies (if any)

CONTRACT NO. _____ AGENCY _____ DATE COMPLETED _____

CONTRACT NO. _____ AGENCY _____ DATE COMPLETED _____

CONTRACT NO. _____ AGENCY _____ DATE COMPLETED _____

List 3 most recent contracts/subcontracts performed for other agencies/entities
(complete ONLY if vendor has performed fewer than 3 NYC contracts)

TYPE OF WORK. _____ AGENCY/ENTITY _____ DATE COMPLETED _____
Manager at agency/entity that hired vendor (Name/Phone No.) _____

TYPE OF WORK. _____ AGENCY/ENTITY _____ DATE COMPLETED _____
Manager at agency/entity that hired vendor (Name/Phone No.) _____

TYPE OF WORK. _____ AGENCY/ENTITY _____ DATE COMPLETED _____
Manager at agency/entity that hired vendor (Name/Phone No.) _____

VENDOR CERTIFICATION: *I hereby affirm that the information supplied in support of this waiver request is true and correct, and that this request is made in good faith.*

Signature: _____ **Date:** _____

Print Name: _____ **Title:** _____

Shaded area below is for agency completion only

AGENCY CHIEF CONTRACTING OFFICER APPROVAL

Signature: _____ **Date:** _____

CITY CHIEF PROCUREMENT OFFICER APPROVAL

Signature: _____ **Date:** _____

(NO TEXT ON THIS PAGE)

APPRENTICESHIP PROGRAM REQUIREMENTS

Bidders are advised that the Apprenticeship Program Requirements set forth below apply to each contract for which a check mark is indicated before the word "Yes". Compliance with these requirements will be determined solely by the City.

_____ YES ___√___ NO

(1) Apprenticeship Program Requirements

Notice to Bidders: Please be advised that, pursuant to the authority granted to the City under Labor Law Section 816-b, the Department of Design and Construction hereby requires that the contractor awarded a contract as a result of this Invitation for Bids, and any of its subcontractors with subcontracts worth one million dollars or over, have, prior to entering into such contract or subcontract, apprenticeship agreements appropriate for the type and scope of work to be performed that have been registered with, and approved by, the New York State Commissioner of Labor. In addition, the contractor and its subcontractors will be required to show that such apprenticeship programs have three years of current, successful experience in providing career opportunities.

The failure to prove, upon request, that these requirements have been met shall result in the contract not being awarded to the contractor or the subcontract not being approved.

Please be further advised that, pursuant to Labor Law Section 220, the allowable ratio of apprentices to journeypersons in any craft classification shall not be greater than the ratio permitted to the contractor as to its workforce on any job under the registered apprenticeship program.

(2) Apprenticeship Program Questionnaire

The bidder must submit a completed and signed Apprenticeship Program Questionnaire. The Questionnaire is set forth on the following page of the Bid Booklet.

APPRENTICESHIP PROGRAM QUESTIONNAIRE

PROJECT ID: QED1008

The bidder must submit a completed and signed Apprenticeship Program Questionnaire.

1. Does the bidder have an Apprenticeship Program appropriate for the type and scope of work to be performed? [Note: Participation may be by either direct sponsorship or through collective bargaining agreement(s).]

   _____ YES _____ NO

2. Has the bidder's Apprenticeship Program been registered with, and approved by, the New York State Commissioner of Labor?

   _____ YES _____ NO

3. Has the bidder's Apprenticeship Program had three years of successful experience in providing career opportunities?

   _____ YES _____ NO

If the answer to Question #3 is "Yes", the bidder shall, in the space below, provide information regarding the experience the Apprenticeship Program has had in providing career opportunities. The bidder may attach additional pages if necessary.

_____

_____

_____

_____

_____

_____

_____

_____

_____

_____

_____

Bidder: _____

By: _____ Title: _____
(Signature of Partner or Corporate Officer)

Date: _____

Project ID. _____

SAFETY QUESTIONNAIRE

The bidder must include, with its bid, all information requested on this Safety Questionnaire. Failure to provide a completed and signed Safety Questionnaire at the time of bid opening may result in disqualification of the bid as non-responsive.

1. Bidder Information:

Company Name: _____

DDC Project Number: _____

Company Size: _____ Ten (10) employees or less

_____ Greater than ten (10) employees

_____ Company has previously worked for DDC

2. Type(s) of Construction Work

TYPE OF WORK	LAST 3 YEARS	THIS PROJECT
General Building Construction	_____	_____
Residential Building Construction	_____	_____
Nonresidential Building Construction	_____	_____
Heavy Construction, except building	_____	_____
Highway and Street Construction	_____	_____
Heavy Construction, except highways	_____	_____
Plumbing, Heating, HVAC	_____	_____
Painting and Paper Hanging	_____	_____
Electrical Work	_____	_____
Masonry, Stonework and Plastering	_____	_____
Carpentry and Floor Work	_____	_____
Roofing, Siding, and Sheet Metal	_____	_____
Concrete Work	_____	_____
Specialty Trade Contracting	_____	_____
Asbestos Abatement	_____	_____
Other (specify)		
_____	_____	_____

3. Experience Modification Rate:

The Experience Modification Rate (EMR) is a rating generated by the National Council of Compensation Insurance (NCCI). This rating is used to determine the contractor's premium for worker's compensation insurance. The contractor may obtain its EMR by contacting its insurance broker or the NCCI. If the contractor cannot obtain its EMR, it must submit a written explanation as to why.

_____

Project ID. _____

The Contractor must indicate its Intrastate and Interstate EMR for the past three years. [Note: For contractors with less than three years of experience, the EMR will be considered to be 1.00].

YEAR	INTRASTATE RATE	INTERSTATE RATE
_____	_____	_____
_____	_____	_____
_____	_____	_____

If the Intrastate and/or Interstate EMR for any of the past three years is greater than 1.00, the contractor must attach, to this questionnaire, a written explanation for the rating and identify what corrective action was taken to correct the situation resulting in that rating.

4. OSHA Information:

_____ Contractor has received a willful violation issued by OSHA or New York City Department of Buildings (NYCDOB) within the last three years.

_____ Contractor has had an incident requiring OSHA notification within 8 hours (i.e., fatality, or hospitalization of three or more employees).

The Occupational Safety and Health Act (OSHA) of 1970 requires employers with ten or more employees, on a yearly basis to complete and maintain on file the form entitled "Log of Work-related Injuries and Illnesses". This form is commonly referred to as the OSHA 300 Log (OSHA 200 Log for 2001 and earlier).

The OSHA 300 Log must be submitted for the last three years for contractors with more than ten employees.

The Contractor must indicate the total number of hours worked by its employees, as reflected in payroll records for the past three years.

The contractor must submit the Incident Rate for Lost Time Injuries (the Incident Rate) for the past three years. The Incident Rate is calculated in accordance with the formula set forth below. For each given year, the total number of incidents is the total number of non-fatal injuries and illnesses reported on the OSHA 300 Log. The 200,000 hours represents the equivalent of 100 employees working forty hours a week, fifty weeks per year.

$$\text{Incident Rate} = \frac{\text{Total Number of Incidents X 200,000}}{\text{Total Number of Hours Worked by Employees}}$$

Project ID. _____

YEAR	TOTAL NUMBERS OF HOURS WORKED BY EMPLOYEES	INCIDENT RATE
_____	_____	_____
_____	_____	_____
_____	_____	_____

If the contractor's Incident Rate for any of the past three years is one point higher than the Incident Rate for the type of construction it performs (listed below), the contractor must attach, to this questionnaire, a written explanation for the relatively high rate.

General Building Construction	8.5
Residential Building Construction	7.0
Nonresidential Building Construction	10.2
Heavy Construction, except building	8.7
Highway and Street Construction	9.7
Heavy Construction, except highways	8.3
Plumbing, Heating, HVAC	11.3
Painting and Paper Hanging	6.9
Electrical Work	9.5
Masonry, Stonework and Plastering	10.5
Carpentry and Floor Work	12.2
Roofing, Siding, and Sheet Metal	10.3
Concrete Work	8.6
Specialty Trade Contracting	8.6

5. Safety Performance on Previous DDC Project(s)

_____ Contractor previously audited by the DDC Office of Site Safety.

DDC Project Number(s): _____

_____

_____ Accident on previous DDC Project(s).

_____ Fatality or Life-altering Injury on DDC Project(s) within the last three years. [Examples of a life-altering injury include loss of limb, loss of a sense (e.g., sight, hearing), or loss of neurological function].

Date: _____ By: _____
(Signature of Owner, Partner, Corporate Officer)

Title: _____

(NO TEXT ON THIS PAGE)

Pre-Award Process

The bidder is advised that as part of the pre-award review of its bid, it may be required to submit the information described in Sections (A) through (D) below. If required, such information must be submitted by the bidder within five (5) business days following receipt of notification from DDC that it is among the low bidders. Such notification from DDC will be by facsimile or in writing and will specify the types of information must be submitted. The types of information the bidder may be required to submit are described below. In the event the bidder fails to submit the required information within the specified time frame, its bid may be rejected as nonresponsive.

****

(A) **Project Reference Form:** If required, the bidder must complete and submit the Project Reference Form set forth on pages 17 through 19 of this Bid Booklet. The Project Reference Form consists of 3 parts: (1) Similar Contracts Completed by the Bidder, (2) Contracts Currently Under Construction by the Bidder, and (3) Pending Contracts Not Yet Started by the Bidder.

(B) **Copy of License:** If required, the bidder must submit a copy of the license under which the bidder will be performing the work. Such license must clearly show the following: (1) Name of the Licensee, (2) License Number, and (3) Expiration date of the License. A copy of the license will be required from bidders for the following contracts: Plumbing Work, Electrical Work and Asbestos Abatement.

(C) **Financial Information:** If required, the bidder must submit the financial information described below:

(1) Audited Financial Statements: Financial statements (Balance Sheet and Income Statement) of the entity submitting the bid, as audited by an independent auditor licensed to practice as a certified public accountant (CPA). Audited financial statements for the three most recent fiscal years must be submitted. Each such financial statement must include the auditor's standard report.

If the bidder does not have audited financial statements, it must submit an affidavit attesting to the fact that the bidder does not have such statements. In addition, the bidder must submit the following documentation covering the three most recent fiscal years: signed federal tax returns, unaudited financial statements, and a "certified review letter" from a certified public accountant (CPA) verifying the unaudited financial statements.

Unless the most recent audited or unaudited financial statement was issued within ninety (90) days, the bidder must submit interim financial information that includes data on financial position and results of operation (income data) for the current fiscal year. Such information may be summarized on a monthly or quarterly basis or at other intervals.

(2) Schedule of Aged Accounts Receivable, including portion due within ninety (90) days.

(D) **Project Specific Information:** If required, the bidder must submit the project specific information described below:

(1) Statement indicating the number of years of experience the bidder has had and in what type of construction.
(2) Resumes of all key personnel to be involved in the project, including the proposed project superintendent.
(3) List of significant pieces of equipment expected to be used for the contract, and whether such equipment is owned or leased.
(4) Description of work expected to be subcontracted, and to what firms, if known.
(5) List of key material suppliers.
(6) Preliminary bar chart time schedule
(7) Contractor's expected means of financing the project. This should be based on the assumption that the contractor is required to finance 2X average monthly billings throughout the contract period.
(8) Any other issues the contractor sees as impacting his ability to complete the project according to the contract.

In addition to the information described in Sections (A) through (D) above, the bidder shall submit such additional information as the Commissioner may require, including without limitation, an explanation or justification for specific unit price items.

The bidder is further advised that it may be required to attend a pre-award meeting with DDC representatives. If such a meeting is convened, the bidder will be advised as to any additional material to be provided.

A. PROJECT REFERENCES – SIMILAR CONTRACTS COMPLETED BY THE BIDDER

List all contracts substantially completed within the last 4 years similar to the contract being awarded, up to a maximum of 10, in descending order of date of substantial completion.

Project & Location	Contract Type	Contract Amount ($000)	Date Completed	Owner Reference & Tel. No.	Architect/Engineer Reference & Tel. No. if different from owner

B. PROJECT REFERENCES – CONTRACTS CURRENTLY UNDER CONSTRUCTION BY THE BIDDER

List all contracts currently under construction even if they are not similar to the contract being awarded.

Project & Location	Contract Type	Contract Amount ($000)	Subcontracted to Others ($000)	Uncompleted Portion ($000)	Date Scheduled to Complete	Owner Reference & Tel. No.	Architect/Engineer Reference & Tel. No. if different from owner

C. PROJECT REFERENCES – PENDING CONTRACTS NOT YET STARTED BY THE BIDDER

List all contracts awarded to or won by the bidder but not yet started.

Project & Location	Contract Type	Contract Amount ($000)	Date Scheduled to Start	Owner Reference & Tel. No.	Architect/Engineer Reference & Tel. No. if different from owner

(NO TEXT ON THIS PAGE)

OFFICE OF THE MAYOR
BUREAU OF LABOR SERVICES
CONTRACT CERTIFICATE

To be completed if the contract is less than $1,000,000

Contractor: _____

Address: _____

_____

Telephone Number: _____

Name and Title of Signatory: _____

_____

Contracting Agency or Owner: _____

Project Number: _____

Proposed Contract Amount: _____

Description and Address of Proposed Contract: _____

Names of Subcontractors in the amount of 750,000 or more on this contract (if not known at this time, so state indicating that trades will be subcontracted):

_____

_____

_____

I, (fill in name of person signing) _____, hereby affirm that I am authorized by the above-named contractor to certify that said contractor's proposed contract with the above-named owner or city agency is less than $1,000,000. This affirmation is made in accordance with Executive Order No. 50 (1980) as amended and its implementing regulations.

_____ _____
Date Signature

WILLFUL OR FRAUDULENT FALSIFICATION OF ANY DATA OR INFORMATION SUBMITTED HEREWITH MAY RESULT IN THE TERMINATION OF ANY CONTRACT BETWEEN THE CITY AND THE BIDDER OR CONTRACTOR AND BAR THE BIDDER OR CONTRACTOR FROM PARTICIPATION IN ANY CITY CONTRACT FOR A PERIOD OF UP TO THREE YEARS. FURTHER, SUCH FALSIFICATION MAY RESULT IN CRIMINAL PROSECUTION.

(NO TEXT ON THIS PAGE)

VENDEX COMPLIANCE

(A) **Vendex Fees:** Pursuant to Procurement Policy Board Rule 2-08(f)(2), the contractor will be charged a fee for the administration of the VENDEX system, including the Vendor Name Check process, if a Vendor Name Check review is required to be conducted by the Department of Investigation. The contractor shall also be required to pay the applicable required fees for any of its subcontractors for which Vendor Name Check reviews are required. The fee(s) will be deducted from payments made to the contractor under the contract. For contracts with an estimated value of less than or equal to $1,000,000, the fee will be $175 per Vendor Name Check review. For contracts with an estimated value of greater than $1,000,000, the fee will be $350 per Vendor Name Check review.

(B) **Confirmation of Vendex Compliance:** The Bidder shall submit this Confirmation of Vendex Compliance to the Department of Design and Construction, Contracts Section, 30-30 Thomson Avenue – First Floor, Long Island City, NY 11101.

Bid Information: The Bidder shall complete the bid information set forth below.

Name of Bidder: _____
Bidder's Address: _____
Bidder's Telephone Number: _____
Bidder's Fax Number: _____
Date of Bid Opening: _____
Project ID: _____

Vendex Compliance: To demonstrate compliance with Vendex requirements, the Bidder shall complete either Section (1) or Section (2) below, whichever applies.

(1) **Submission of Vendex Questionnaires to MOCS:** By signing in the space provided below, the Bidder certifies that as of the date specified below, the Bidder has submitted Vendex Questionnaires to the Mayor's Office of Contract Services, Attn: VENDEX, 253 Broadway, 9th Floor, New York, New York 10007.

Date of Submission: _____

By: _____
(Signature of Partner or corporate officer)

Print Name: _____

(2) **Submission of Certification of No Change to DDC:** By signing in the space provided below, the Bidder certifies that it has read the instructions in a "Vendor's Guide to Vendex" and that such instructions do not require the Bidder to submit Vendex Questionnaires. The Bidder has completed **TWO ORIGINALS** of the Certification of No Change set forth on the next page of this Bid Booklet.

By: _____
(Signature of Partner or corporate officer)

Print Name: _____

(NO TEXT ON THIS PAGE)

Certificate of No Change Form

Mayor's Office of Contract Services

- Please submit two completed forms. Copies will not be accepted.
- Please send both copies to the agency that requested it, unless you are advised to send it directly to the Mayor's Office of Contract Services (MOCS).
- A materially false statement willfully or fraudulently made in connection with this certification, and/or the failure to conduct appropriate due diligence in verifying the information that is the subject of this certification, may result in rendering the submitting entity non-responsible for the purpose of contract award.
- A materially false statement willfully or fraudulently made in connection with this certification may subject the person making the false statement to criminal charges

I, _____, being duly sworn, state that I have read
Enter Your Name

and understand all the items contained in the vendor questionnaire and any submission of change as identified on page one of this form and certify that as of this date, these items have not changed. I further certify that, to the best of my knowledge, information and belief, those answers are full, complete, and accurate; and that, to the best of my knowledge, information, and belief, those answers continue to be full, complete, and accurate.

In addition, I further certify on behalf of the submitting vendor that the information contained in the principal questionnaire(s) and any submission of change identified on page two of this form have not changed and have been verified and continue, to the best of my knowledge, to be full, complete and accurate.

I understand that the City of New York will rely on the information supplied in this certification as additional inducement to enter into a contract with the submitting entity.

Vendor Questionnaire *This section is required.*

This refers to the vendor questionnaire(s) submitted for the vendor doing business with the City.

Name of Submitting Entity: _____

Vendor's Address: _____

Vendor's EIN or TIN: _____ Requesting Agency: _____

Are you submitting this Certification as a parent? (Please circle one) Yes No

Signature date on the last full vendor questionnaire signed for the submitting vendor: _____

Signature date on change submission for the submitting vendor: _____

Principal Questionnaire

This section refers to the most recent principal questionnaire submissions.

Mayor's Office of Contract Services

	Principal Name	Date of signature on last full Principal Questionnaire	Date(s) of signature on submission of change
1			
2			
3			
4			
5			
6			

☐ Check if additional changes were submitted and attach a document with the date of additional submissions.

Certification *This section is required.*

This form must be signed and notarized. Please complete this twice. Copies will not be accepted.

Certified By:

_____
Name (Print)

_____
Title

_____
Name of Submitting Entity

_____ _____
Signature *Date*

Notarized By:

_____ _____ _____
Notary Public *County License Issued* *License Number*

Sworn to before me on: _____
Date

Certificate of No Change Form

Mayor's Office of Contract Services

- Please submit two completed forms. Copies will not be accepted.
- Please send both copies to the agency that requested it, unless you are advised to send it directly to the Mayor's Office of Contract Services (MOCS).
- A materially false statement willfully or fraudulently made in connection with this certification, and/or the failure to conduct appropriate due diligence in verifying the information that is the subject of this certification, may result in rendering the submitting entity non-responsible for the purpose of contract award.
- A materially false statement willfully or fraudulently made in connection with this certification may subject the person making the false statement to criminal charges

I, _____, being duly sworn, state that I have read
Enter Your Name

and understand all the items contained in the vendor questionnaire and any submission of change as identified on page one of this form and certify that as of this date, these items have not changed. I further certify that, to the best of my knowledge, information and belief, those answers are full, complete, and accurate; and that, to the best of my knowledge, information, and belief, those answers continue to be full, complete, and accurate.

In addition, I further certify on behalf of the submitting vendor that the information contained in the principal questionnaire(s) and any submission of change identified on page two of this form have not changed and have been verified and continue, to the best of my knowledge, to be full, complete and accurate.

I understand that the City of New York will rely on the information supplied in this certification as additional inducement to enter into a contract with the submitting entity.

Vendor Questionnaire *This section is required.*

This refers to the vendor questionnaire(s) submitted for the vendor doing business with the City.

Name of Submitting Entity: _____

Vendor's Address: _____

Vendor's EIN or TIN: _____ Requesting Agency: _____

Are you submitting this Certification as a parent? (Please circle one) Yes No

Signature date on the last full vendor questionnaire signed for the submitting vendor: _____

Signature date on change submission for the submitting vendor: _____

Principal Questionnaire

This section refers to the most recent principal questionnaire submissions.

Mayor's Office of Contract Services

	Principal Name	Date of signature on last full Principal Questionnaire	Date(s) of signature on submission of change
1			
2			
3			
4			
5			
6			

☐ Check if additional changes were submitted and attach a document with the date of additional submissions.

Certification *This section is required.*

This form must be signed and notarized. Please complete this twice. Copies will not be accepted.

Certified By:

_____
Name (Print)

_____
Title

_____
Name of Submitting Entity

_____ _____
Signature *Date*

Notarized By:

_____ _____ _____
Notary Public *County License Issued* *License Number*

Sworn to before me on: _____
Date

IRAN DIVESTMENT ACT COMPLIANCE RIDER

FOR NEW YORK CITY CONTRACTORS

The Iran Divestment Act of 2012, effective as of April 12, 2012, is codified at State Finance Law ("SFL") §165-a and General Municipal Law ("GML") §103-g. The Iran Divestment Act, with certain exceptions, prohibits municipalities, including the City, from entering into contracts with persons engaged in investment activities in the energy sector of Iran. Pursuant to the terms set forth in SFL §165-a and GML §103-g, a person engages in investment activities in the energy sector of Iran if:

(a) The person provides goods or services of twenty million dollars or more in the energy sector of Iran, including a person that provides oil or liquefied natural gas tankers, or products used to construct or maintain pipelines used to transport oil or liquefied natural gas, for the energy sector of Iran; or

(b) The person is a financial institution that extends twenty million dollars or more in credit to another person, for forty-five days or more, if that person will use the credit to provide goods or services in the energy sector in Iran and is identified on a list created pursuant to paragraph (b) of subdivision three of Section 165-a of the State Finance Law and maintained by the Commissioner of the Office of General Services.

A bid or proposal shall not be considered for award nor shall any award be made where the bidder or proposer fails to submit a signed and verified bidder's certification.

Each bidder or proposer must certify that it is not on the list of entities engaged in investment activities in Iran created pursuant to paragraph (b) of subdivision 3 of Section 165-a of the State Finance Law. In any case where the bidder or proposer cannot certify that they are not on such list, the bidder or proposer shall so state and shall furnish with the bid or proposal a signed statement which sets forth in detail the reasons why such statement cannot be made. The City of New York may award a bid to a bidder who cannot make the certification on a case by case basis if:

(1) The investment activities in Iran were made before the effective date of this section (i.e., April 12, 2012), the investment activities in Iran have not been expanded or renewed after the effective date of this section and the person has adopted, publicized and is implementing a formal plan to cease the investment activities in Iran and to refrain from engaging in any new investments in Iran: or

(2) The City makes a determination that the goods or services are necessary for the City to perform its functions and that, absent such an exemption, the City would be unable to obtain the goods or services for which the contract is offered. Such determination shall be made in writing and shall be a public document.

BIDDER'S CERTIFICATION OF COMPLIANCE WITH IRAN DIVESTMENT ACT

Pursuant to General Municipal Law §103-g, which generally prohibits the City from entering into contracts with persons engaged in investment activities in the energy sector of Iran, the bidder/proposer submits the following certification:

[*Please Check One*]

BIDDER'S CERTIFICATION

☐ By submission of this bid or proposal, each bidder/proposer and each person signing on behalf of any bidder/proposer certifies, and in the case of a joint bid each party thereto certifies as to its own organization, under penalty of perjury, that to the best of its knowledge and belief, that each bidder/proposer is not on the list created pursuant to paragraph (b) of subdivision 3 of Section 165-a of the State Finance Law.

☐ I am unable to certify that my name and the name of the bidder/proposer does not appear on the list created pursuant to paragraph (b) of subdivision 3 of Section 165-a of the State Finance Law. I have attached a signed statement setting forth in detail why I cannot so certify.

Dated: _____, New York
_____, 20 __

_____
SIGNATURE

_____
PRINTED NAME

_____
TITLE

Sworn to before me this
_____ day of_____, 20____

_____
Notary Public

Dated:

THE CITY OF NEW YORK
DEPARTMENT OF SMALL BUSINESS SERVICES
DIVISION OF LABOR SERVICES
CONTRACT COMPLIANCE UNIT
110 WILLIAMS STREET
NEW YORK, NEW YORK 10038
PHONE: (212) 513-6323
FAX: (212) 618-8879

CONSTRUCTION

EMPLOYMENT

REPORT

(NO TEXT ON THIS PAGE)

The City of New York Department of Small Business Services
Division of Labor Services Contract Compliance Unit
110 William Street, New York, New York 10038
Phone: (212) 513 – 6323
Fax: (212) 618-8879

CONSTRUCTION EMPLOYMENT REPORT

GENERAL INFORMATION

1. Your contractual relationship in this contract is: Prime contractor____ Subcontractor____

1a. Are M/WBE goals attached to this project? Yes ____ No ____

2. Please check one of the following if your firm would like information on how to certify with the City of New York as a:
___Minority Owned Business Enterprise ___Locally based Business Enterprise
___Women Owned Business Enterprise ___Emerging Business Enterprise

2a. If you are certified as an **MBE**, **WBE**, or **LBE**, what city/state agency are you certified with?
_____ Are you DBE certified? Yes ____ No ____

3. Please indicate if you would like assistance from SBS in identifying certified M/WBEs for contracting opportunities: Yes___ No___

4. Is this project subject to a project labor agreement? Yes ____ No ____

PART I: CONTRACTOR/SUBCONTRACTOR INFORMATION

5. _____
Employer Identification Number or Federal Tax I.D./ Email Address

6. _____
Company Name

7. _____
Company Address and Zip Code

8. _____
Chief Operating Officer Telephone Number

9 _____
Designated Equal Opportunity Compliance Officer Telephone Number
(If same as Item #7, write "same")

10. _____
Name of Prime Contractor and Contact Person
(If same as Item #5, write "same")

11. Number of employees in your company: _____

FOR OFFICIAL USE ONLY: File No._____

12. Contract information:

(a) _____
Contracting Agency (City Agency)

(b) _____
Contract Amount

(d) _____
Procurement Identification Number (PIN)

(e) _____
Contract Registration Number (CT#)

(f) _____
Projected Commencement Date

(g) _____
Projected Completion Date

(h) Description and location of proposed contract:

_____

_____

13. Has your firm been reviewed by the Division of Labor Services (DLS) within the past 36 months and issued a Certificate of Approval? Yes___ No___

If yes, attach a copy of certificate.

14. Has DLS within the past month reviewed an Employment Report submission for your company and issued a Conditional Certificate of Approval? Yes___ No___

If yes, attach a copy of certificate.

NOTE: DLS WILL NOT ISSUE A CONTINUED CERTIFICATE OF APPROVAL IN CONNECTION WITH THIS CONTRACT UNLESS THE REQUIRED CORRECTIVE ACTIONS IN PRIOR CONDITIONAL CERTIFICATES OF APPROVAL HAVE BEEN TAKEN.

15. Has an Employment Report already been submitted for a different contract (not covered by this Employment Report) for which you have not yet received compliance certificate?
Yes___ No___ If yes,

Date submitted: _____
Agency to which submitted: _____
Name of Agency Person: _____
Contract No: _____
Telephone: _____

16. Has your company in the past 36 months been audited by the United States Department of Labor, Office of Federal Contract Compliance Programs (OFCCP)? Yes___ No___

If yes,

(a) Name and address of OFCCP office.

_____

_____

(b) Was a Certificate of Equal Employment Compliance issued within the past 36 months?
Yes___ No___

If yes, attach a copy of such certificate.

(c) Were any corrective actions required or agreed to? Yes___ No___

If yes, attach a copy of such requirements or agreements.

(d) Were any deficiencies found? Yes___ No___

If yes, attach a copy of such findings.

17. Is your company or its affiliates a member or members of an employers' trade association which is responsible for negotiating collective bargaining agreements (CBA) which affect construction site hiring? Yes___ No___

If yes, attach a list of such associations and all applicable CBA's.

PART II: DOCUMENTS REQUIRED

18. For the following policies or practices, attach the relevant documents (e.g., printed booklets, brochures, manuals, memoranda, etc.). If the policy(ies) are unwritten, attach a full explanation of the practices. See instructions.

___ (a) Health benefit coverage/description(s) for all management, nonunion and union employees (whether company or union administered)

___ (b) Disability, life, other insurance coverage/description

___ (c) Employee Policy/Handbook

___ (d) Personnel Policy/Manual

___ (e) Supervisor's Policy/Manual

___ (f) Pension plan or 401k coverage/description for all management, nonunion and union employees, whether company or union administered

___ (g) Collective bargaining agreement(s).

___ (h) Employment Application(s)

___ (i) Employee evaluation policy/form(s).

___ (j) Does your firm have medical and/or non-medical (i.e. education, military, personal, pregnancy, child care) leave policy?

19. To comply with the Immigration Reform and Control Act of 1986 when <u>and of whom</u> does your firm require the completion of an I-9 Form?

(a) Prior to job offer	Yes___	No___
(b) After a conditional job offer	Yes___	No___
(c) After a job offer	Yes___	No___
(d) Within the first three days on the job	Yes___	No___
(e) To some applicants	Yes___	No___
(f) To all applicants	Yes___	No___
(g) To some employees	Yes___	No___
(h) To all employees	Yes___	No___

20. Explain where and how completed I-9 Forms, with their supportive documentation, are maintained and made accessible.

_____

_____

21. Does your firm or any of its collective bargaining agreements require job applicants to take a medical examination? Yes___ No___

If yes, is the medical examination given:

(a) Prior to a job offer Yes___ No___
(b) After a conditional job offer Yes___ No___
(c) After a job offer Yes___ No___
(d) To all applicants Yes___ No___
(e) Only to some applicants Yes___ No___

If yes, list for which applicants below and attach copies of all medical examination or questionnaire forms and instructions utilized for these examinations.

_____

_____

22. Do you have a written equal employment opportunity (EEO) policy? Yes___ No___

If yes, list the document(s) and page number(s) where these written policies are located.

_____

_____

23. Does the company have a current affirmative action plan(s) (AAP)
_____Minorities and Women
_____Individuals with handicaps
_____Other. Please specify _____

24. Does your firm or collective bargaining agreement(s) have an internal grievance procedure with respect to EEO complaints? Yes___ No___

If yes, please attach a copy of this policy.

If no, attach a report detailing your firm's unwritten procedure for handling EEO complaints.

25. Has any employee, within the past three years, filed a complaint pursuant to an internal grievance procedure or with any official of your firm with respect to equal employment opportunity? Yes___ No___

If yes, attach an internal complaint log. See instructions.

26. Has your firm, within the past three years, been named as a defendant (or respondent) in any administrative or judicial action where the complainant (plaintiff) alleged violation of any anti-discrimination or affirmative action laws? Yes___ No___

If yes, attach a log. See instructions.

27. Are there any jobs for which there are physical qualifications? Yes___ No___

If yes, list the job(s), submit a job description and state the reason(s) for the qualification(s).

_____

_____

28. Are there any jobs for which there are age, race, color, national origin, sex, creed, disability, marital status, sexual orientation, or citizenship qualifications? Yes___ No___

If yes, list the job(s), submit a job description and state the reason(s) for the qualification(s).

_____

_____

SIGNATURE PAGE

I, (print name of authorized official signing)_____ hereby certify that the information submitted herewith is true and complete to the best of my knowledge and belief and submitted with the understanding that compliance with New York City's equal employment requirements, as contained in Chapter 56 of the City Charter, Executive Order No. 50 (1980), as amended, and the implementing Rules and Regulations, is a contractual obligation.

I also agree on behalf of the company to submit a certified copy of payroll records to the Division of Labor Services on a monthly basis.

_____
Contractor's Name

_____
Name of person who prepared this Employment Report Title

_____
Name of official authorized to sign on behalf of the contractor Title

_____
Telephone Number

_____
Signature of authorized official Date

If contractors are found to be underutilizing minorities and females in any given trade based on Chapter 56 Section 3H, the Division of Labor Services reserves the right to request the contractor's workforce data and to implement an employment program.

Contractors who fail to comply with the above mentioned requirements or are found to be in noncompliance may be subject to the withholding of final payment.

Willful or fraudulent falsifications of any data or information submitted herewith may result in the termination of the contract between the City and the bidder or contractor and in disapproval of future contracts for a period of up to five years. Further, such falsification may result in civil and/and or criminal prosecution.

To the extent permitted by law and consistent with the proper discharge of DLS' responsibilities under Charter Chapter 56 of the City Charter and Executive Order No. 50 (1980) and the implementing Rules and Regulations, all information provided by a contractor to DLS shall be confidential.

Only original signatures accepted.

Sworn to before me this _____ day of _____ 20 _____

_____
Notary Public Authorized Signature Date

FOR OFFICIAL USE ONLY: File No._____

NEW YORK CITY DEPARTMENT OF
DESIGN + CONSTRUCTION

INFRASTRUCTURE DIVISION
BUREAU OF DESIGN

VOLUME 1 OF 3

PROJECT ID: QED1008

FOR THE INSTALLATION OF 60-INCH AND 12-INCH WATER MAINS IN: 54TH STREET BETWEEN FLUSHING AVENUE AND GRAND AVENUE

Together With All Work Incidental Thereto
BOROUGH OF QUEENS
CITY OF NEW YORK

_____

Contractor

_____

Dated_____, **20**___

_____

NEW YORK CITY DEPARTMENT OF
DESIGN + CONSTRUCTION

THE CITY OF NEW YORK
DEPARTMENT OF DESIGN AND CONSTRUCTION
DIVISION OF INFRASTRUCTURE

30-30 THOMSON AVENUE
LONG ISLAND CITY, NEW YORK 11101-3045
TELEPHONE (718) 391-1000
WEBSITE www.nyc.gov/buildnyc

VOLUME 2 OF 3

INFORMATION FOR BIDDERS
CONTRACT
PERFORMANCE AND PAYMENT BONDS
PREVAILING WAGE SCHEDULE

FOR FURNISHING ALL LABOR AND MATERIALS NECESSARY AND REQUIRED FOR:

PROJECT ID: QED1008

FOR THE INSTALLATION OF 60-INCH AND 12-INCH WATER MAINS IN:
54TH STREET BETWEEN FLUSHING AVENUE AND GRAND AVENUE

Together With All Work Incidental Thereto
BOROUGH OF QUEENS
CITY OF NEW YORK

FOR THE DEPARTMENT OF ENVIRONMENTAL PROTECTION
PREPARED BY
IN-HOUSE DESIGN

February 25, 2013

W 3-029

NEW YORK CITY DEPARTMENT OF
DESIGN + CONSTRUCTION

THE CITY OF NEW YORK
DEPARTMENT OF DESIGN AND CONSTRUCTION
DIVISION OF INFRASTRUCTURE

30-30 THOMSON AVENUE
LONG ISLAND CITY, NEW YORK 11101-3045
TELEPHONE (718) 391-1000
WEBSITE www.nyc.gov/buildnyc

VOLUME 2 OF 3

INFORMATION FOR BIDDERS
CONTRACT
PERFORMANCE AND PAYMENT BONDS
PREVAILING WAGE SCHEDULE

FOR FURNISHING ALL LABOR AND MATERIALS NECESSARY AND REQUIRED FOR:

FOR THE DEPARTMENT OF ENVIRONMENTAL PROTECTION
PREPARED BY
IN-HOUSE DESIGN

February 25, 2013

Notice to Bidders:

In 2013 the City will be implementing a new web based subcontractor reporting system. Once this subcontractor reporting system is implemented, and Contractor receives notice of its implementation, Contractor will be required to list in the system all of the subcontractors that it knows it will use or is already using in the performance of this contract. For each subcontractor listed, Contractor will be required to provide the following information: maximum contract value, description of subcontractor work, start and end date of the subcontract and identification of the subcontractor's industry. Identification of subcontractors in the system along with the required information will be required in order to obtain subcontractor approval under [section 3.02 of Appendix A][Article 17 of the Standard Construction Contract] and PPB Rule § 4-13 for all subcontractors that have not been approved as of the implementation date. Thereafter, Contractor will be required to report in the system the payments made to each subcontractor within 30 days of making the payment. If any of the required information changes throughout the term of the contract, Contractor will be required to revise the information in the system...

When the subcontractor reporting system is implemented, Contractor will receive a written notice from the City which will contain the information the Contractor will need to list its subcontractors and report payments. Contractor will not be required to comply with the requirements set forth herein until such notice is issued. Contractor will have 30 days from the date of the notice to list its current subcontractors for which it has already received Agency approval, if any. Thereafter, for those subcontractors that have not yet been approved by the Agency, subcontractors will have to be listed in the system in order to obtain the required Agency approval.

Failure of the Contractor to list a subcontractor and/or to report subcontractor payments in a timely fashion may result in the Agency declaring the Contractor in default of the Contract and may subject Contractor to liquidated damages in the amount of $100 per day for each day that the Contractor fails to identify a subcontractor along with the required information about the subcontractor and/or fails to report payments to a subcontractor, beyond the time frames set forth herein or in the notice from the City. For construction contracts, the provisions of Article 15 of the Standard Construction Contract shall govern the issue of liquidated damages.

Contractor hereby agrees to these provisions and acknowledges that they will become effective on the date set forth in the notice.

(NO TEXT ON THIS PAGE)

NOTICE TO BIDDERS, PROPOSERS, CONTRACTORS, AND RENEWAL CONTRACTORS

This contract includes a provision concerning the protection of employees for whistleblowing activity, pursuant to New York City Local Law Nos. 30-2012 and 33-2012, effective October 18, 2012 and September 18, 2012, respectively. The provisions apply to contracts with a value in excess of $100,000.

Local Law No. 33-2012, the Whistleblower Protection Expansion Act ("WPEA"), prohibits a contractor or its subcontractor from taking an adverse personnel action against an employee or officer for whistleblower activity in connection with a City contract; requires that certain City contracts include a provision to that effect; and provides that a contractor or subcontractor may be subject to penalties and injunctive relief if a court finds that it retaliated in violation of the WPEA. The WPEA is codified at Section 12-113 of the New York City Administrative Code.

Local Law No. 30-2012 requires a contractor to prominently post information explaining how its employees can report allegations of fraud, false claims, criminality, or corruption in connection with a City contract to City officials and the rights and remedies afforded to employees for whistleblowing activity. Local Law No. 30-2012 is codified at Section 6-132 of the New York City Administrative Code.

WHISTLEBLOWER PROTECTION EXPANSION ACT RIDER

1. In accordance with Local Law Nos. 30-2012 and 33-2012, codified at sections 6-132 and 12-113 of the New York City Administrative Code, respectively,

   (a) Contractor shall not take an adverse personnel action with respect to an officer or employee in retaliation for such officer or employee making a report of information concerning conduct which such officer or employee knows or reasonably believes to involve corruption, criminal activity, conflict of interest, gross mismanagement or abuse of authority by any officer or employee relating to this Contract to (i) the Commissioner of the Department of Investigation, (ii) a member of the New York City Council, the Public Advocate, or the Comptroller, or (iii) the City Chief Procurement Officer, ACCO, Agency head, or Commissioner.

   (b) If any of Contractor's officers or employees believes that he or she has been the subject of an adverse personnel action in violation of subparagraph (a) of paragraph 1 of this rider, he or she shall be entitled to bring a cause of action against Contractor to recover all relief necessary to make him or her whole. Such relief may include but is not limited to: (i) an injunction to restrain continued retaliation, (ii) reinstatement to the position such employee would have had but for the retaliation or to an equivalent position, (iii) reinstatement of full fringe benefits and seniority rights, (iv) payment of two times back pay, plus interest, and (v) compensation for any special damages sustained as a result of the retaliation, including litigation costs and reasonable attorney's fees.

   (c) Contractor shall post a notice provided by the City in a prominent and accessible place on any site where work pursuant to the Contract is performed that contains information about:

      (i) how its employees can report to the New York City Department of Investigation allegations of fraud, false claims, criminality or corruption arising out of or in connection with the Contract; and

      (ii) the rights and remedies afforded to its employees under New York City Administrative Code sections 7-805 (the New York City False Claims Act) and 12-113 (the Whistleblower Protection Expansion Act) for lawful acts taken in connection with the reporting of allegations of fraud, false claims, criminality or corruption in connection with the Contract.

   (d) For the purposes of this rider, "adverse personnel action" includes dismissal, demotion, suspension, disciplinary action, negative performance evaluation, any action resulting in loss of staff, office space, equipment or other benefit, failure to appoint, failure to promote, or any transfer or assignment or failure to transfer or assign against the wishes of the affected officer or employee.

   (e) This rider is applicable to all of Contractor's subcontractors having subcontracts with a value in excess of $100,000; accordingly, Contractor shall include this rider in all subcontracts with a value a value in excess of $100,000.

2. Paragraph 1 is not applicable to this Contract if it is valued at $100,000 or less. Subparagraphs (a), (b), (d), and (e) of paragraph 1 are not applicable to this Contract if it was solicited pursuant to a finding of an emergency. Subparagraph (c) of paragraph 1 is neither applicable to this Contract if it was solicited prior to October 18, 2012 nor if it is a renewal of a contract executed prior to October 18, 2012.

NOTICE TO BIDDERS

Please be advised that the City of New York has revised the form of the performance bond that is required for City construction contracts that exceed $5 million. The form of bond required for contracts that do not exceed $5 million has not changed. The City's payment bond remains unchanged.

The bond form for contracts that do not exceed $5 million has been approved by the U.S. Small Business Administration ("SBA") for participation in their Bond Guarantee Program. The SBA's Bond Guarantee Program enables eligible small businesses to obtain or increase bonding by having the SBA act as a partial guarantor of the contractor to the surety. For information concerning the SBA program, including current limits on what size contracts are eligible for participation in the program, go to www.sba.gov/osg. If you are interested in participating in this program, we suggest that you contact your broker or the SBA.

In order to maximize participation by small businesses in the SBA Guarantee Program, the City also encourages prime contractors who are awarded contracts greater than $5 million to allow their subcontractors to use the SBA-approved form, particularly on contracts that are subject to Local Law 129 (the M/WBE program), if the prime contractor requires subcontractors to obtain performance bonds.

(NO TEXT ON THIS PAGE)

CITY OF NEW YORK

DEPARTMENT OF
DESIGN AND CONSTRUCTION
DIVISION OF INFRASTRUCTURES

INFORMATION FOR BIDDERS

SEPTEMBER 2008

(NO TEXT ON THIS PAGE)

CITY OF NEW YORK CITY
DEPARTMENT OF DESIGN AND CONSTRUCTION
INFORMATION FOR BIDDERS

TABLE OF CONTENTS

(NO TEXT ON THIS PAGE)

INFORMATION FOR BIDDERS

1. Description and Location of Work

The description and location of the work for which bids are requested are specified in Attachment 1, "Bid Information". Attachment 1 is included as page A-1 of the Bid Booklet.

2. Time and Place for Receipt of Bids

Sealed bids shall be received on or before the date and hour specified in Attachment 1, at which time they will be publicly opened and read aloud in the presence of the Commissioner or his or her representative, and any bidders who may desire to be present.

3. Definitions

The definitions set forth in the Procurement Policy Board Rules shall apply to this Invitation For Bids.

4. Invitation For Bids and Contract Documents

(A) Except for titles, sub-titles, headings, running headlines, tables of contents and indices (all of which are printed herein merely for convenience) the following, except for such portions thereof as may be specifically excluded, shall be deemed to be part of the Contract and the Invitation for Bids.

(1) All provisions required by law to be inserted in this Contract, whether actually inserted or not
(2) The Contract Drawings and Specifications
(3) The General Conditions, the General Requirements and the Special Conditions, if any
(4) The Contract
(5) The Information for Bidders; Request for Proposals; Notice of Solicitation and Proposal For Bids; Bid or Proposal, and, if used, the Bid Booklet
(6) The Budget Director's Certificate; all Addenda issued prior to the receipt of the bids; the Notice of Award; Performance and Payment Bonds, if required; and the Notice to Proceed with the Work.

(B) For particulars as to this procurement, including quantity and quality of the purchase, extent of the work or labor to be performed, delivery and performance schedule, and any other special instructions, prospective bidders are referred to the Invitation For Bids Documents. A copy of such documents can be obtained at the location set forth in Attachment 1.

(C) Deposit for Copy of Invitation For Bids Documents: Prospective bidders may obtain a copy of the Invitation For Bids Documents by complying with the conditions set forth in the Notice of Solicitation. The deposit must be in the form of a check or money order made payable to the City of New York, and drawn upon a state or national bank or trust company, or a check of such bank or trust company signed by a duly authorized officer thereof.

(D) Return of Invitation For Bids Documents: All Invitation For Bids Documents must be returned to the Department upon request. If the bidder elects not to submit a bid thereunder, the

Invitation For Bids Documents shall be returned to the Department, along with a statement that no bid will be submitted.

(E) Return of Deposit: Such deposit will be returned within 30 days after the award of the contract or the rejection of all bids as set forth in the advertisement, provided the Invitation For Bids Documents are returned to the location specified in Attachment 1, in physical condition satisfactory to the Commissioner.

(F) Additional Copies: Additional copies of the Invitation For Bids Documents may be obtained, subject to the conditions set forth in the advertisement for bids.

5. Pre-Bid Conference

A pre-bid conference shall be held as set forth in Attachment 1. Nothing stated at the pre-bid conference shall change the terms or conditions of the Invitation For Bids Documents, unless a change is made by written amendment as provided in Section 9 below. Failure to attend a mandatory pre-bid conference shall constitute grounds for the rejection of the bid.

6. Agency Contact

Any questions or correspondence relating to this bid solicitation shall be addressed to the Agency Contact person specified in Attachment 1.

7. Bidder's Oath

(A) The bid-shall be properly signed by an authorized representative of the bidder and the bid shall be verified by the written oath of the authorized representative who signed the bid, that the several matters stated and information furnished therein are in all aspects true.

(B) A materially false statement willfully or fraudulently made in connection with the bid or any of the forms completed and submitted with the bid may result in the termination of any Contract between the City and the Bidder. As a result, the Bidder may be barred from participating in future City contracts as well as be subject to possible criminal prosecution.

8. Examination and Viewing of Site, Consideration of Other Sources of Information and Changed Conditions

(A) Pre-Bidding (Investigation) Viewing of Site -Bidders must carefully view and examine the site of the proposed work, as well as its adjacent area, and seek other usual sources of information, for they will be conclusively presumed to have full knowledge of any and all conditions on, about or above the site relating to or affecting in any way the performance of the work to be done under the Contract which were or should have been indicated to a reasonably prudent bidder. To arrange a date for visiting the work site, bidders are to contact the Agency Contact person specified in Attachment 1.

(B) Should the contractor encounter during the progress of the work subsurface conditions at the site materially differing from any shown on the Contract Drawings or indicated in the Specifications or such subsurface conditions as could not reasonably have been anticipated by the contractor and were not anticipated by the City, which conditions will materially affect the cost of the work to be done under the

Contract, the attention of the Commissioner must be called immediately to such conditions before they are disturbed. The Commissioner shall thereupon promptly investigate the conditions. If he finds that they do so materially differ, or that they could not have been reasonably anticipated by the contractor and were not anticipated by the City, the Contract may be modified with his written approval.

9. Examination of Proposed Contract

(A) Request for Interpretation or Correction: Prospective bidders must examine the Contract Documents carefully and before bidding must request the Commissioner in writing for an interpretation or correction of every patent ambiguity, inconsistency or error therein which should have been discovered by a reasonably prudent bidder. Such interpretation or correction, as well as any additional contract provisions the Commissioner may decide to include, will be issued in writing by the Commissioner as an addendum to the Contract, which will be transmitted to each person recorded as having received a copy of the Contract Documents from the Department. Transmission of such addendum will be by mail, e-mail, facsimile or hand delivery. Such addendum will also be posted at the place where the Contract Documents are available for the inspection of prospective bidders. Upon transmission as provided for herein, such addendum shall become a part of the Contract Documents, and binding on all bidders, whether or not actual notice of such addendum is shown.

(B) Only Commissioner's Interpretation or Correction Binding: Only the written interpretation or correction so given by the Commissioner shall be binding, and prospective bidders are warned that no other officer, agent or employee of the City is authorized to give information concerning, or to explain or interpret, the Contract.

(C) Documents given to a subcontractor for the purpose of soliciting the subcontractor's bid shall include either a copy of the bid cover sheet or a separate information sheet setting forth the project name, the Contract number (if available), the contracting agency and the Project's location.

10. Form of Bid

Each bid must be submitted upon the prescribed form and must contain: a) the name, residence and place of business of the person or persons making the same; b) the names of all persons interested therein, and if no other person is so interested, such fact must be distinctly stated; c) a statement to the effect that it is made without any connection with any other person making a bid for the same purpose and that it is in all respects fair and without collusion or fraud; d) a statement that no Council member or other officer or employee or person whose salary is payable in whole or part from the City Treasury is directly or indirectly interested therein or in the supplies, materials or equipment and work or labor to which it relates, or in any portion of the profits thereof; e) a statement that the bidder is not in arrears to the City or to any agency upon a debt or contract or taxes, and is not a defaulter as surety or otherwise upon any obligation to the City to any agency thereof, except as set forth in the bid.

THE BID SHALL BE TYPEWRITTEN OR WRITTEN LEGIBLY IN INK. THE BID SHALL BE SIGNED IN INK. ERASURES OR ALTERATIONS SHALL BE INITIALED BY THE SIGNER IN INK. FAILURE TO CONFORM TO THE REQUIREMENTS OF THIS SECTION 10 SHALL RESULT IN THE REJECTION OF THE BID.

11. Irrevocability of Bid

The prices set forth in the bid cannot be revoked and shall be effective until the award of the Contract, unless the bid is withdrawn as provided for in Sections 15 and 18 below.

12. Acknowledgment of Amendments

The receipt of any amendment to the Contract Documents shall be acknowledged by the bidder in its bid submission.

13. Bid Samples and Descriptive Literature

Bid samples and descriptive literature shall not be submitted by the bidder, unless expressly requested elsewhere in the Contract or Contract Documents. Any unsolicited bid samples or descriptive literature which are submitted shall not be examined or tested and shall not be deemed to vary any of the provisions of this Contract.

14. Proprietary Information/Trade Secrets

(A) The bidder shall identify those portions of the bid which it deems to be confidential, proprietary information or trade secrets, and provide justification why such materials shall not be disclosed by the City. All such materials shall be clearly indicated by stamping the pages on which such information appears, at the top and bottom thereof with the word "Confidential". Such materials stamped "Confidential" must be easily separable from the non-confidential sections of the bid.

(B) All such materials so indicated shall be reviewed by the Agency and any decision not to honor a request for confidentiality shall be communicated in writing to the bidder. For those bids which are unsuccessful, all such confidential materials shall be returned to the bidder. Prices, makes and model or catalog numbers of the items offered, deliveries, and terms of payment shall be publicly available after bid opening, regardless of any designation of confidentiality made by the bidder.

15. Pre-Opening Modification or Withdrawal of Bids

Bids may be modified or withdrawn by written notice received in the office designated in Attachment 1, before the time and date set for the bid opening. If a bid is withdrawn in accordance with this Section, the bid security, if any, shall be returned to the bidder.

16. Bid Evaluation and Award

In accordance with the New York City Charter, the Procurement Policy Board Rules and the terms and conditions of this Invitation For Bids, this Contract shall be awarded, if at all, to the responsible bidder whose bid meets the requirements and evaluation criteria set forth in the Invitation For Bids, and whose bid price is either the most favorable bid price or, if the Invitation For Bids so states, the most favorable evaluated bid price. A bid may not be evaluated for any requirement or criterion that is not disclosed in the Invitation For Bids.

Restriction: No negotiations with any bidder shall be allowed to take place except under the circumstances and in the manner set forth in Section 21. Nothing in this Section shall be deemed to permit a contract award to a bidder submitting a higher quality item than that designated in the Invitation For Bids, if that bid is not also the most favorable bid.

17. Late Bids, Late Withdrawals and Late Modifications

Any bid received at the place designated in the solicitation after the time and date set for receipt of bids is late and shall not be considered. Any request for withdrawal or modification received at the place designated in the solicitation after the time and date set for receipt of bids is late and shall not be considered. The exception to this provision is that a late modification of a successful bid that makes the bid terms more favorable to the City shall be considered at any time it is received.

18. Withdrawal of Bids.

Except as provided for in Section 15, above, a bidder may not withdraw its bid before the expiration of forty-five (45) days after the date of the opening of bids; thereafter, a bidder may withdraw its bid only in writing and in advance of an actual award. If within sixty (60) days after the execution of the Contract, the Commissioner fails to fix the date for commencement of work by written notice to the bidder, the bidder, at his option, may ask to be relieved of his obligation to perform the work called for by written notice to the Commissioner. If such notice is given to the Commissioner, and the request to withdraw is granted, the bidder waives all claims in connection with this Contract.

19. Mistake in Bids

(A) Mistake Discovered Before Bid Opening: A bidder may correct mistakes discovered before the time and date set for bid opening by withdrawing or correcting the bid as provided in Section 15 above.

(B) Mistakes Discovered Before Award

(1) In accordance with General Municipal Law (Section 103, subdivision 11), where a unilateral error or mistake is discovered in a bid, such bid may be withdrawn upon written approval of the Agency Chief Contracting Officer if the following conditions are met:

(a) The mistake is known or made known to the agency prior to the awarding of the Contract or within 3 days after the opening of the bid, whichever period is shorter; and
(b) The price bid was based upon an error of such magnitude that enforcement would be unconscionable; and
(c) The bid was submitted in good faith and the bidder submits credible evidence that the mistake was a clerical error as opposed to a judgment error; and
(d) The error in the bid is actually due to an unintentional and substantial arithmetic error or an unintentional omission of a substantial quantity of work, labor, material or services made directly in the compilation of the bid, which unintentional arithmetic error or unintentional omission can be clearly shown by objective evidence drawn from inspection of the original work paper, documents, or materials used in the preparation of the bid sought to be withdrawn; and
(e) It is possible to place the agency in the same position as existed prior to the bid.

(2) Unless otherwise required by law, the sole remedy for a bid mistake in accordance with this Article shall be withdrawal of the bid, and the return of the bid bond, or other security, if any, to the bidder. Thereafter, the agency may, in its discretion, award the Contract to the next lowest bidder or rebid the Contract. Any amendment to or reformation of a bid or a Contract to rectify such an error or mistake

therein is strictly prohibited.

(3) If the mistake and the intended correct bid are clearly evident on the face of the bid document, the bid shall be corrected to the intended correct bid and may not be withdrawn. Examples of mistakes that may be corrected are typographical errors, errors in extending unit prices, transposition errors and arithmetical errors.

20. Low Tie Bids

(A) When two or more low responsive bids from responsible bidders are identical in price, meeting all the requirements and criteria set forth in the Invitation For Bids, the Agency Chief Contracting Officer will break the tie in the following manner and order of priority:

(1) Award to a certified New York City small, minority or woman-owned business entity bidder;
(2) Award to a New York City bidder;
(3) Award to a certified New York State small, minority or woman-owned business bidder;
(4) Award to a New York State bidder.

(B) If two or more bidders still remain equally eligible after application of paragraph (A) above, award shall be made by a drawing by lot limited to those bidders. The bidders involved shall be invited to attend the drawing. A witness shall be present to verify the drawing and shall certify the results on the bid tabulation sheet.

21. Rejection of Bids

(A) Rejection of Individual Bids: The Agency may reject a bid if:

(1) The bidder fails to furnish any of the information required pursuant to Section 24 or 28 hereof; or if
(2) The bidder is determined to be not responsible pursuant to the Procurement Policy Board Rules; or if
(3) The bid is determined to be non-responsive pursuant to the Procurement Policy Board Rules; or if
(4) The bid, in the opinion of the Agency Chief Contracting Officer, contains unbalanced bid prices and is thus non-responsive, unless the bidder can show that the prices are not unbalanced for the probable required quantity of items, or if the imbalance is corrected pursuant to Section 15.

(B) Rejection of All Bids: The Agency, upon written approval by the Agency Chief Contracting Officer, may reject all bids and may elect to resolicit bids if in its sole opinion it shall deem it in the best interest of the City so to do.

(C) Rejection of All Bids and Negotiation With All Responsible Bidders: The Agency Head may determine that it is appropriate to cancel the Invitation For Bids after bid opening and before award and to complete the acquisition by negotiation. This determination shall be based on one of the following reasons:

(1) All otherwise acceptable bids received are at unreasonable prices, or only one bid is received and the Agency Chief Contracting Officer cannot determine the reasonableness of the bid price, or no responsive bid has been received from a responsible bidder; or

(2) In the judgment of the Agency Chief Contracting Officer, the bids were not independently arrived at in open competition, were collusive, or were submitted in bad faith.

(D) When the Agency has determined that the Invitation for Bids is to be canceled and that use of negotiation is appropriate to complete the acquisition, the contracting officer may negotiate and award the Contract without issuing a new solicitation, subject to the following conditions:

(1) prior notice of the intention to negotiate and a reasonable opportunity to negotiate have been given by the contracting officer to each responsible bidder that submitted a bid in response to the Invitation for Bids;

(2) the negotiated price is the lowest negotiated price offered by a responsible bidder; and

(3) the negotiated price is lower than the lowest rejected bid price of a responsible bidder that submitted a bid in response to the Invitation for Bids.

22. Right to Appeal Determinations of Non-Responsiveness or Non-Responsibility and Right to Protest Solicitations and Award

The bidder has the right to appeal a determination of non-responsiveness or non-responsibility and has the right to protest a solicitation and award. For further information concerning these rights, the bidder is directed to the Procurement Policy Board Rules.

23. Affirmative Action and Equal Employment Opportunity

This Invitation For Bids is subject to applicable provisions of Federal, State and Local Laws and executive orders requiring affirmative action and equal employment opportunity.

24. VENDEX Questionnaires

(A) Requirement: Pursuant to Administrative Code Section 6-116.2 and the PPB Rules, bidders may be obligated to complete and submit VENDEX Questionnaires. Generally, if this bid is $100,000 or more, or if this bid when added to the sum total of all contracts, concessions and franchises the bidder has received from the City and any subcontracts received from City contractors over the past twelve months, equals or exceeds $100,000, Vendex Questionnaires must be completed. If required, Vendex Questionnaires must be completed and submitted before any award of contract may be made or before approval is given for a proposed subcontractor. Non-compliance with these submission requirements may result in the disqualification of the bid, disapproval of a subcontractor, subsequent withdrawal of approval for the use of an approved subcontractor, or the cancellation of the contract after its award.

(B) Submission: Vendex Questionnaires must be submitted directly to the Mayor's Office of Contract Services, ATTN: Vendex, 253 Broadway, 9th Floor, New York, New York 10007. In addition, the bidder must submit a Confirmation of Vendex Compliance to the agency. A form for this confirmation is set forth in the Bid Booklet.

(C) Obtaining Forms: Vendex Questionnaires, as well as detailed instructions, may be obtained at www.nyc.gov/vendex. The bidder may also obtain Vendex forms and instructions by contacting the

Agency Chief Contracting Office or the contract person for this contract.

25. Complaints About the Bid Process

The New York City Comptroller is charged with the audit of contracts in New York City. Any vendor who believes that there has been unfairness, favoritism or impropriety in the bid process should inform the Comptroller, Office of Contract Administration, One Centre Street, Room 835, New York, New York; telephone number (212)669-2797.

26. Bid, Performance and Payment Security

(A) Bid Security: Each bid must be accompanied by bid security in an amount and type specified in Attachment 1 (page A-1 of the Bid Booklet). The bid security shall assure the City of New York of the adherence of the bidder to its proposal, the execution of the Contract, and the furnishing of Performance and Payment Bonds by the bidder, if required in Attachment 1. Bid security shall be returned to the bidder as follows:

(1) Within ten (10) days after the bid opening, the Comptroller will be notified to return the deposits of all but the three (3) lowest bidders. Within five (5) days after the award, the Comptroller will be notified to return the deposits of the remaining two unsuccessful bidders.
(2) Within five (5) days after the execution of the Contract and acceptance of the Contractor's bonds, the Comptroller will be notified to return the bid security of the successful bidder or, if performance and payment bonds are not required, only after the sum retained under Article 21 of the Contract equals the amount of the bid security.
(3) Where all bids are rejected, the Comptroller will be notified to return the deposit of the three (3) lowest bidders at the time of rejection.

(B) Performance and Payment Security: Performance and Payment Security must be provided in an amount and type specified in Attachment 1 (page A-1 of the Bid Booklet). The performance and payment security shall be delivered by the contractor prior to or at the time of execution of the Contract. If a contractor fails to deliver the required performance and payment security, its bid security shall be enforced, and an award of Contract may be made to the next lowest responsible and responsive bidder, or the contract may be rebid.

(C) Acceptable Types of Security: Acceptable types of security for bids, performance, and payment shall be limited to the following:

(1) a one-time bond in a form satisfactory to the City;
(2) a bank certified check or money order;
(3) obligations of the City of New York; or
(4) other financial instruments as determined by the Office of Construction in consultation with the Comptroller.

Whenever the successful bidder deposits obligations of the City of New York as performance and payment security, the Comptroller may sell and use the proceeds thereof for any purpose for which the principal or surety on such bond would be liable under the terms of the Contract. If the money is deposited with the Comptroller, the successful bidder shall not be entitled to receive interest on such money from the City.

(D) Form of Bonds: Security provided in the form of bonds must be prepared on the form of bonds authorized by the City of New York. Forms for bid, performance, and payment bonds are included in the Invitation for Bids Documents. Such bonds must have as surety thereunder such surety company or companies as are: (I) approved by the City of New York; (2) authorized to do business in the State of New York, and (3) approved by the Department of the Treasury of the United States. Premiums for any required bonds must be included in the base bid.

The bidder is advised that submission of a bid bond where the surety on such bond fails to meet the criteria set forth herein, shall result in the rejection of the bid as non-responsive.

The Department of the Treasury of the United States advises that information concerning approved surety companies may be obtained as follows: (1) from the Government Printing Office at 202-512-1800; (2) through the Internet at http://www.fms.treas.gov/c570/index.html, and (3) through a computerized public bulletin board, which can be accessed by using your computer modem and dialing 202-874-6887.

(E) Power of Attorney: Attorneys in fact who sign bid, performance, or payment bonds must file with each bond a certified copy of their power of attorney to sign said bonds.

27. Failure to Execute Contract

In the event of failure of the successful bidder to execute the Contract and furnish the required security within ten (10) days after notice of the award of the Contract, the deposit of the successful bidder or so much thereof as shall be applicable to the amount of the award made shall be retained by the City, and the successful bidder shall be liable for and hereby agrees to pay on demand the difference between the price bid and the price for which such Contract shall be subsequently awarded, including the cost of any required reletting and less the amount of such deposit. No plea of mistake in such accepted bid shall be available to the bidder for the recovery of the deposit or as a defense to any action based upon such accepted bid. Further, should the bidder's failure to comply with this Section cause any funding agency, body or group (Federal, State, City, Public, Private, etc.) to terminate, cancel or reduce the funding on this project, the bidder in such event shall be liable also to the City for the amount of actual funding withdrawn by such agency on this project, less the amount of the forfeited deposit.

28. Bidder Responsibilities and Qualifications

(A) Bidders must include with their bids all information necessary for a determination of bidder responsibility, as set forth in the Specifications.

(B) The Agency may require any bidder or prospective bidder to furnish all books of account, records, vouchers, statements or other information concerning the bidder's financial status for examination as may be required by the Agency to ascertain the bidder's responsibility and capability to perform the Contract. If required, a bidder must also submit a sworn statement setting forth such information as the Agency may require concerning present and proposed plant and equipment, the personnel and qualifications of his working organizations, prior experience and performance record.

(C) Oral Examination on Qualifications: In addition thereto, and when directed by the Agency, the bidder, or a responsible officer, agent or employee of the bidder, must submit to an oral examination to be conducted by the Agency in relation to his proposed tentative plan and schedule of

operations, and such other matters as the Agency may deem necessary in order to determine the bidder's ability and responsibility to perform the work in accordance with the Contract. Each person so examined must sign and verify a stenographic transcript of such examination noting thereon such corrections as such person may desire to make.

(D) If the bidder fails or refuses to supply any of the documents or information set forth in paragraph (B) hereof or fails to comply with any of the requirements thereof, the Agency may reject the bid.

29. Employment Report

In accordance with Executive Order No. 50 (1980) as modified by Executive Order 108 (1986), the filing of a completed Employment Report (ER) is a requirement of doing business with the City of New York for construction contractors with contracts of $1,000,000 or more and subcontractors with construction subcontracts of $750,000 or more. The required forms and information are included in the Bid Booklet.

30. Labor Law Requirements

(A) General: The successful bidder will be required to comply strictly with all Federal, State and local labor laws and regulations.

(B) New York State Labor Law: This Contract is subject to New York State Labor Law Section 220, which requires that construction workers on the site be paid prevailing wages and supplements. The Contractor is reminded that all wage provisions of this Contract will be enforced strictly and failure to comply will be considered when evaluating performance. Noncompliance may result in the contractor being debarred by the City from future contracts. Complaints filed with the Comptroller may result in decisions which may debar a contractor from bidding contracts with any state governmental entity and other political subdivisions.

(C) Records: The Contractor is expected to submit accurate payroll reports and other required documents and verify attendance and job classifications being utilized in compliance with the law, Contract provisions and agency procedures.

31. Insurance

(A) Bidders are advised that the insurance requirements contained herein are regarded as material terms of the Contract. As required by Article 22 of the Contract, the contractor must effect and maintain with companies licensed and authorized to do business in the State of New York, the types of insurance set forth therein, when required by and in the amounts set forth in Schedule A of the General Conditions. Such required insurance must be provided from the date the contractor is ordered to commence work and up to the date of final acceptance of all required work.

(B) The contractor must, within ten days of receipt of the notice of award, submit the following insurance documentation: (a) original certificate of insurance for general liability in the amount required by Schedule A of the General Conditions, and (b) original certificates of insurance or other proof of coverage for workers' compensation and disability benefits, as required by Section 57 of the New York State Workers' Compensation Law and Section 220 of the Disability Benefits Law.

32. Lump Sum Contracts

(A) Comparison of Bids: Bids on Lump Sum Contracts will be compared on the basis of the lump sum price bid, adjusted for alternate prices bid, if any.

(B) Lump Sum Bids for "General Construction Work" which include excavation shall include all necessary excavation work defined in the Specifications as being included in the lump sum bid. The bidder shall also bid a unit price for the additional cost of excavating material which is defined in the Specifications as excavation for which additional payment will be made. The total estimated additional cost of removing such material will be taken as the quantity set forth in the Engineer's Estimate multiplied by the unit price bid. This total estimated cost of additional excavation shall be added to the lump sum bid for the General Construction Work for the purpose of comparing bids to determine the low bidder.

(C) Variations from Engineer's Estimate: The Engineer's Estimate of the quantity of excavation for which additional payment will be made is approximate only and is given solely to be used as a uniform basis for the comparison of bids and such estimate is not to be considered as part of this contract. The quantities actually required to complete the contract work may be more or less than the quantities in the Engineer's Estimate and, if so, no action for damages or for loss of profits shall accrue to the contractor by reason thereof.

33. Unit Price Contracts

(A) Comparison of Bids: Bids on Unit Price Contracts will be compared on the basis of a total estimated price, arrived at by taking the sum of the estimated quantities of such items, in accordance with the Engineer's Estimate of Quantities set forth in the Bid Schedule, multiplied by the corresponding unit prices, and including any lump sum bids on individual items.

(B) Variations from Engineer's Estimate: Bidders are warned that the Engineer's Estimate of Quantities on the various items of work and materials is approximate only, given solely to be used as a uniform basis for the comparison of bids, and is not be considered part of this contract. The quantities actually required to complete the contract work may be less or more than so estimated, and if so, no action for damages or for loss of profits shall accrue to the contractor by reason thereof.

(C) Overruns: The terms and conditions applicable to overruns of unit price items are set forth in Article 26 of the Contract.

34. Excise Tax

Bidders are referred to the Specifications for information on Federal Excise Tax exemptions.

35. Licenses and Permits

The successful bidder will be required to obtain all necessary licenses and permits necessary to perform the work.

36. Multiple Prime Contractors

If more than one prime contractor will be involved on this project, all contractors are required to examine the Invitation for Bid packages for all other parts of the project.

37. Locally Based Enterprise Requirements (LBE)

This Contract is subject to the requirements of Administrative Code, Section 6-108.1, and the regulations promulgated thereunder. No construction contract will be awarded unless and until these requirements have been complied with in their entirety. The bidder is advised of the provisions set forth below, as well as the provisions with respect to the Locally Based Enterprise Program contained in Article 67 of the Contract. The contractor is advised that:

(A) If any portion of the Contract is subcontracted, not less than ten percent of the total dollar amount of the contract shall be awarded to locally based enterprises ("LBEs"); except, where less than ten percent of the total dollar amount of the Contract is subcontracted, such lesser percentage shall be so awarded.

(B) No contractor shall require performance and payment bonds from LBE subcontractors.

(C) No Contract shall be awarded unless the contractor first identifies in its bid:

(1) the percentage, dollar amount and type of work to be subcontracted; and
(2) the percentage, dollar amount and type of work to be subcontracted to LBEs.

(D) Within ten calendar days after notification of low bid, the apparent low bidder shall submit an "LBE Participation Schedule" to the contracting agency. If such schedule does not identify sufficient LBE subcontractors to meet the requirements of Administrative Code Section 6-108.1, the apparent low bidder shall submit documentation of its good faith efforts to meet such requirements.

(1) The "LBE Participation Schedule" shall include:

(a) the name and address of each LBE that will be given a subcontract,
(b) the percentage, dollar amount and type of work to be subcontracted to the LBE, and
(c) the dates when the LBE subcontract work will commence and end.

(2) The following documents shall be attached to the "LBE Participation Schedule":

(a) verification letters from each subcontractor listed in the "LBE Participation Schedule" stating that the LBE will enter into a formal agreement for work,
(b) certification documents of any proposed LBE subcontractor which is not on the LBE certified list, and
(c) copies of the certification letter of any proposed subcontractor which is an LBE.

(3) Documentation of good faith efforts to achieve the required LBE percentage shall include as appropriate but not limited to the following:

(a) attendance at prebid meetings, when scheduled by the agency, to advise bidders of contract requirements;

(b) advertisement where appropriate in general circulation media, trade association publications and small business media of the specific subcontracts that would be at least equal to the percentage goal for LBE utilization specified by the contractor;

(c) written notification to association of small, minority and women contractors soliciting specific subcontractors;

(d) written notification by certified mail to LBE firms that their interest in the contract is solicited for specific work items and their estimated values;

(e) demonstration of efforts made to select portions of the work for performance by LBE firms in order to increase the likelihood of achieving the stated goal;

(f) documented efforts to negotiate with LBE firms for specific subcontracts, including at a minimum:

(i) The names, address and telephone numbers of LBE firms that are contacted;

(ii) A description of the information provided to LBE firms regarding the plans and specifications for portions of the work to be performed;

(iii) Documentation showing that no reasonable price can be obtained from LBE firms;

(iv) A statement of why agreements with LBE firms were not reached;

(g) a statement of the reason for rejecting any LBE firm which the contractor deemed to be unqualified; and

(h) documentation of efforts made to assist the LBE firms contacted that needed assistance in obtaining required insurance.

(E) Unless otherwise waived by the Commissioner with the approval of the Office of Economic and Financial Opportunity, failure of a proposed contractor to provide the information required by paragraphs (C) and (D) above may render the bid non-responsive and the Contract may not be awarded to the bidder. If the contractor states that it will subcontract a specific portion of the work, but can demonstrate despite good faith efforts it cannot achieve its required LBE percentage for subcontracted work until after award of Contract, the Contract may be awarded, subject to a letter of compliance from the contractor stating that it will comply with Administrative Code Section 6-108.1 and subject to approval by the Commissioner. If the contractor has not met its required LBE percentage prior to award, the contractor shall demonstrate that a good faith effort has been made subsequent to award to obtain LBEs on each subcontract until its meets the required percentage.

(F) When a bidder indicates prior to award that no work will be subcontracted, no work may be subcontracted without the prior written approval of the Commissioner, which shall be granted only if the contractor in good faith seeks LBE subcontractors at least six weeks prior to the start of work.

(G) The contractor may not substitute or change any LBE which was identified prior to award of the contract without the written permission of the Commissioner. The contractor shall make a written application to the Commissioner for permission to make such substitution or change, explaining why the contractor needs to change its LBE subcontractor and how the contractor will meet its LBE subcontracting requirement. Copies of such application must be served on the originally identified LBE by certified mail return receipt requested, as well as the proposed substitute LBE. The Commissioner shall determine whether or not to grant the contractor's request for substitution.

38. Bid Submission Requirements

The Bid Submission Requirements are set forth on page 2 of the Bid Booklet.

39. Comptroller's Certificate

This Contract shall not be binding or of any force unless it is registered by the Comptroller in accordance with Section 328 of the City Charter and the Procurement Policy Board Rules. This Contract shall continue in force only after annual appropriation of funds by the City of New York and certification as hereinabove set forth.

40. Procurement Policy Board Rules

This Invitation For Bids is subject to the Rules of the Procurement Policy Board of the City of New York. In the event of a conflict between said Rules and a provision of this Invitation For Bids, the Rules shall take precedence.

41. DDC Safety Requirements

The DDC Safety Requirements apply to the work to be performed pursuant to the Contract. The DDC Safety Requirements are set forth on the following pages.

CITY OF NEW YORK

DEPARTMENT OF DESIGN AND CONSTRUCTION

SAFETY REQUIREMENTS

THE DDC SAFETY REQUIREMENTS INCLUDE THE FOLLOWING SECTIONS:

I. POLICY ON SITE SAFETY

The City of New York Department of Design and Construction (DDC) is committed to a policy of injury and illness prevention and risk management for construction work that will ensure the safety and health of the workers engaged in the projects and the protection of the general public. Therefore, it is DDC's policy that work carried out by Contractors on DDC jobsites must, at a minimum, comply with applicable federal, state and city laws, rules and regulations, including without limitation:

- U. S. Department of Labor 29 Code of Federal Regulations (CFR) Part 1926 and applicable Sub-parts of Part 1910 – U.S. Occupational Safety and Health Administration (OSHA) including, but not limited to "Respiratory Protection" (29 CFR 1910.134), "Permit-Required Confined Spaces" (29 CFR 1910.146), and "Hazard Communication" (29 CFR 1910.1200);
- New York State Department of Labor Industrial Code Rule 23 – Protection in Construction, Demolition and Excavation;
- New York City Construction Codes, Title 28
- NYC Department of Transportation Title 34 Chapter 2 – Highway Rules
- New York State Department of Labor Industrial Code Rule 753
- NYC Local Law No. 113 (2005) Noise Control Code

In addition, all regulations promulgated by the NYC Department of Transportation, including requirements for Maintenance and Protection of Traffic (MPT), are applicable when contained in contract specifications. While MPT is a significant component of work in our Infrastructure Division, it does not supersede or exempt Contractors from complying with other applicable health and safety standards (for example, excavating and trenching standards, operation of heavy equipment and compliance with City environmental and noise regulations).

II. PURPOSE

The purpose of this policy is to ensure that Contractors perform their work and supervise their employees in accordance with all applicable federal, state and city rules and regulations. Further, Contractors will be expected to minimize or eliminate jobsite and public hazard, through a planning, inspection, auditing and corrective action process. The goal is to control risks so that injuries, illnesses and accidents to contractors' employees, DDC employees and the general public, as well as damage to city-owned and private property, are reduced to the lowest level feasible.

III. DEFINITIONS

Agency Chief Contracting Officer (ACCO): The ACCO shall mean the person delegated authority by the Commissioner to organize and supervise the procurement activity of subordinate Agency staff in conjunction with the CCPO.

Competent Person: As defined by OSHA, an individual who is capable of identifying existing and predictable hazards in the surroundings or working conditions that are unsanitary, hazardous, or dangerous to employees or the general public, and who has authorization to take prompt corrective measures to eliminate them.

Construction Safety Auditor: A representative of the QACS Construction Safety Unit who provides inspection and assessment services to enhance health and safety on all DDC construction projects. The activities of the Construction Safety Auditor include performing site surveys, reviewing health and safety plans, reviewing construction permits, and rendering technical advice and assistance to DDC Resident Engineers and Project Managers.

Construction Safety Unit: A part of QACS within the Division of Technical Support that assesses contractor safety on DDC jobsites and advises responsible parties of needed corrective actions.

Construction Superintendent: A representative of the contractor responsible for overseeing performance of the required construction work. This individual must engage in sound construction practices, and is responsible to maintain a safe work site. In the case of a project involving the demolition, alteration or new construction of buildings, the Construction Superintendent must be licensed by the NYC Department of Buildings.

Contractor: For purposes of these Safety Requirements, the term "Contractor" shall mean any person or entity that enters into a contract for the performance of construction work on a DDC project. The term "Contractor" shall include any person or entity which enters into any of the following types of contracts: (1) a prime construction contract for a specific project, (2) a prime construction contract using the Job Order Contracting System ("JOCS Contract"), and (3) a subcontract with a CM/Builder ("First Tier Subcontract").

Director - Quality Assurance and Construction Safety (QACS): Responsible for the operations of the QACS Construction Safety Unit and the DDC Site Safety management programs.

Job Hazard Assessment (JHA): A process of identifying site-specific hazards that may be present during construction and establishing the means and methods to reduce or eliminate those hazards.

Jobsite Safety Coordinator: A person designated by the Contractor to be onsite during all activities. This individual shall have received, at a minimum, the OSHA 10-hour construction safety program. Other examples of acceptable training are the 30-hour OSHA Safety and Health Standards for the Construction Industry training program (OSHA 510) or a degree/certificate in a safety and health from a college-level curriculum. This person does not necessarily have to be dedicated full-time to site safety, but must have sufficient experience and authority to undertake corrective action and must qualify to be a competent person. For certain projects, as defined in NYC Construction Codes – Title 28, this person may be required to have a Site Safety Manager's License issued by the NYC DOB.

Qualified Person: As defined by OSHA, an individual who, by possession of a recognized degree, certificate, license or professional standing, or who by extensive knowledge, training, and experience, has successfully demonstrated his or her ability to solve problems relating to the subject matter, the work, or the project. Qualified Persons are required under regulation to address issues pertaining, but without limit, to fall protection, scaffold design and trenching and shoring, among others.

Resident Engineer (RE) / Construction Project Manager (CPM): Representative of the Commissioner duly designated by the Commissioner to be his/her representative at the site of the work. (The RE/CPM may be a third-party consultant, including a CM, retained by DDC.)

Safety Program: Established by the Contractor that covers all operations of that Contractor and establishes the Contractor's overall safety policy, regulatory compliance plan and minimum safety standards. The Safety Program must be submitted prior to the commencement of work at the site and is subject to review and acceptance by the Construction Safety Unit.

Safety Questionnaire: Used by DDC to evaluate Contractor's current and past safety performance. It is required to be completed by all Contractors initially when submitting bids for Construction work, or when being pre-qualified and updated annually or as requested by the DDC.

Site Safety Plan: A site-specific safety plan developed by the Contractor for a specific project. The Site Safety Plan must identify hazards associated with the project, and include specific safety precautions and training appropriate and necessary to complete the work. The Site Safety Plan must be submitted prior to the commencement of work at the site and is subject to review and acceptance by the Construction Safety Unit.

Unsafe or Unhealthy Condition: A condition that could be potentially hazardous to the health and safety of personnel or the public, and/or damaging to equipment, machinery, property or the environment.

Weekly Safety Meetings: Weekly documented jobsite safety meetings, given to all jobsite personnel by contractor, with the purpose of discussing general safety topics and job specific requirements encountered at the DDC work site.

IV. RESPONSIBILITIES

All persons who manage, perform, and provide support for construction projects shall conduct operations in compliance with the requirements identified in this Policy and all applicable governing regulatory agency requirements and guidelines pertaining to safety in construction.

A. Resident Engineer / Construction Project Manager / Construction Manager

- Monitors the issuance of safety- related permits, approvals and drawings and maintains copies on site.
- Monitors construction-related work activities to confirm that they are conducted in accordance with DDC policies and all applicable regulations that pertain to construction safety.
- Maintains documentation and periodically attends weekly safety meeting.
- Notifies the Construction Safety Unit and the ACCO's Insurance and Risk Management Unit of project- related accidents and emergencies, as per DDC's Construction Safety Emergency Protocol.
- Gathers facts related to all accidents and prepares DDC Accident Reports.
- Notifies the Construction Safety Unit of outside regulatory agency inspections and forwards a copy of the inspection report within three days of its receipt.
- Monitors the conditions at the site for conformance with the Site Safety Plan and DDC construction documents.
- Notifies the contractor and DDC in the event that any condition or activity exists that is not in compliance with the Site Safety Plan, applicable federal, state or local codes or any condition that presents a potential risk of injury to the public or workers or possible damage to property.
- Notifies DDC of any emergency condition and directs the contractor to provide such labor, materials, equipment and supervision to abate such conditions.
- Reports gross safety violations to the Construction Safety Unit immediately.

B. Contractors

- Complete a Safety Questionnaire and submit with its bid or as part of a pre-qualification package.
- Provide a Written Job Hazard Assessment (JHA) that identifies expected safety issues of the work to be performed. JHA shall be included with the Site Safety Plan submitted by the contractor.
- Submit a Site Safety Plan and Safety Program within 15 days of issuance of the Notice to Proceed, or as otherwise directed. The Site Safety Plan and Safety Program are subject to review and acceptance by the Construction Safety Unit prior to the commencement of work at the site. The Site Safety Plan shall be revised and updated as necessary.
- Ensure that all employees are aware of the hazards associated with the project through formal and informal training and/or other communications. Conduct and document weekly safety meetings for the duration of the project. Documentation to be provided to the RE/CPM/CM on a monthly basis.
- Name a Construction Superintendent, if required.
- Name a Job Site Safety Coordinator. The Contractor will be required to identify the Job Site Safety Coordinator in the Site Safety Plan.
- Comply with all mandated federal, state and local safety and health rules and regulations.
- Comply with all provisions of the Site Safety Plan.
- As part of the Site Safety Plan, prepare a site specific MPT (if not otherwise provided in the contract documents) and comply with all of its provisions.

- Conduct and document site-specific safety orientation for Contractor personnel to review the hazards associated with the project as identified in the Site Safety Plan and the specific safety procedures and controls that will be used to protect workers, the general public and property. The Job Site Safety Coordinator will conduct this training prior to mobilization and provide documentation to the RE/CPM/CM.
- Provide, replace and adequately maintain at or around the project site, suitable and sufficient signage, lights, barricades and enclosures (fences, sidewalk sheds, netting, bracing, etc.).
- Report unsafe conditions or hazards to the DDC RE/CPM/CM as soon as practical, but no more than 24 hours after discovery, and take action to remove or abate such conditions.
- Report any accident involving injuries to workers or the general public, as well as property damage, to the DDC RE/CPM/CM within two (2) hours.
- Notify the DDC RE/CPM/CM within two (2) hours of the start of an inspection by any regulatory agency personnel, including OSHA.
- Maintain all records pertaining to all required compliance documents and accident and injury reports.
- Respond to DDC recommendations on safety, which shall in no way relieve the Contractor of its responsibilities for safety on the project. The Contractor has sole responsibility for safety.

V. SAFETY QUESTIONNAIRE

DDC requires that all Contractors provide information regarding their current and past safety and environmental performance and programs. This will be accomplished by the use of the DDC Safety Questionnaire. As a part of the bid submittal package, the contractor must submit a completed DDC Safety Questionnaire listing their workers' compensation experience modification rating and OSHA Incidence Rates for the three (3) years prior to the date of the bid opening. DDC may request a Contractor to update its Questionnaire at any time or to provide more detailed information. The Contractor must provide the requested update within 30 days.

The following criteria will be used by DDC in reviewing the Contractor's responsibility, which will be based on the information provided on the questionnaire:

Criteria 1: OSHA Injury and Illness Rates (I&IR) are no greater than the average for the industry (based on the most current Bureau of Labor Statistics data for the Contractors SIC code); and
Criteria 2: Insurance workers compensation Experience Modification Rate (EMR) equal to or less than 1.0; and
Criteria 3: Any willful violations issued by OSHA or NYC DOB within the last three years; and
Criteria 4: A fatality (worker or member of public) experienced on or near Contractor's worksite within the last three (3) years; and
Criteria 5: An unacceptable rating by QACS based on past performance on DDC projects; and
Criteria 6: Contractor has in place an acceptable corporate safety program and its employees shall have completed all documented relative safety training; and
Criteria 7: Contractor shall provide OSHA Injury Records (currently OSHA 300 Log) for the last three (3) years.

If the Contractor fails to meet the basic criteria listed above, the Construction Safety Unit may request, through the ACCO, more detail concerning the Contractor's safety experience. DDC may request the Contractor to provide copies of, among other things, OSHA records, OSHA and DOB citations, EPA citations and written Safety Programs.

VI. SAFETY PROGRAM AND SITE SAFETY PLAN

Within fifteen (15) days of issuance of the Notice to Proceed, or as otherwise directed, the Contractor shall submit the following: (1) Safety Program, and (2) Site Safety Plan. The Safety Program shall set forth the Contractor's overall safety policy, regulatory compliance plan and minimum safety standard, and the Site Safety Plan shall identify hazards associated with the project, and include specific safety precautions and training appropriate and necessary to complete the work. The Safety Program and the Site Safety Plan are subject to review and acceptance by the Construction Safety Unit prior to the commencement of work at the site. Failure by the contractor to submit an acceptable Site Safety Plan and Safety Program shall be grounds for default.

The Site Safety Plan shall apply to all Contractor and subcontractor operations, and shall have at a minimum, the following elements. Each element shall be described in a separate section in the written document. It may be necessary to modify the basic format for certain unique or high-risk projects (such as tunnels or high-rise construction). The basic elements are as follows:

1. Responsibility and Organization: Identify the person or persons with authority and responsibility for implementing the Site Safety Plan. Provide an organization chart and define levels of authority and responsibility. Identify the Competent Person, the Construction Superintendent (if required), the Job Safety Coordinator and the Qualified Person required for this project.

2. Communication: Establish a system for communicating with employees and subcontractors on matters relating to worker and public safety and health and environmental protection, including provisions designed to encourage employees to inform the employer of hazards at the worksite without fear of reprisal. An emergency response notification protocol is to be established that also includes after hours contact numbers. The plan must also include provisions for weekly safety meetings held by the Job Site Safety Coordinator.

3. Job Hazard Assessment: A written document submitted by the contractor, used to identify expected job hazards and public safety risks and state the specific means and methods to reduce, control or eliminate those hazards. This part of the Site Safety Plan must also include how on-going evaluations of those risks and hazards will be carried out, including plans for periodic inspections to identify unsafe conditions, work practices and public safety hazards.

4. Accident/Exposure Investigation: Establish a procedure to investigate and report occupational and public injury or illness, property damage, vehicle accidents or other mishaps.

5. Hazard Correction: Establish means, methods and/or procedures for correcting unsafe or unhealthy conditions that might be exposing both the public and workers to hazards. Corrective actions must be taken immediately when observed or discovered. Should an imminent hazard exist which cannot be immediately abated without endangering employees, the public and/or property, remove or restrict all exposed persons from the area except those necessary to correct the existing condition. Employees necessary to correct the hazardous condition shall be provided the necessary safeguards. When corrective actions cannot be taken immediately, temporary measures should be taken until such time permanent measures are taken to eliminate the potential risks or hazards

6. Training: Describe site-specific hazard training programs. In addition to the required safety orientation, additional site specific training, in the form of required weekly safety meetings, will be required. Contractors must also initiate training when: a) new employees are hired; b) employees are given new job assignments for which training has not been previously received; c) new substances, processes, procedures or equipment are introduced that might represent a new public or worker hazard; d) the employee is made aware of a new or previously unrecognized hazard; e) new supervisors are assigned to familiarize themselves with the safety and health hazards to which employees under their immediate direction and control may be exposed; and f) after a jobsite incident or accident has occurred.

7. Recordkeeping: Establish procedures to maintain records of scheduled and periodic inspections, weekly safety meetings, and training records. Updated records shall be maintained at the jobsite, accessible to the Construction Safety Auditors and/or Quality Assurance Auditors/RE/CPM, and retained in accordance with DDC policy.

The most critical component of the Site Safety Plan is the Job Hazard Assessment section. This section must address specific hazards that are anticipated throughout the project. Each Site Safety Plan must address, at a minimum:

- Public and pedestrian safety
- Fall protection
- Electrical hazards
- Scaffolding
- Fire protection
- Emergency notification & response
- Housekeeping / debris removal
- Dust control
- Maintenance and protection of traffic
- Trenching and excavating
- Heavy equipment operations
- Material / equipment storage
- Environmental contamination
- Sheeting and shoring
- Alcohol and Drug Abuse Policy

The following additional hazards must be addressed, if applicable, based on the contract safety specifications and/or the results of the JHA (the list is not all-inclusive):

- Basic Personal Protective Equipment
- Compressed Air
- Compressed Gas Cylinders
- Cranes, Derricks and Hoists
- Demolition
- Electrical safety
- Excavations and Trenching
- Fall Protection – Floor openings/Stairways
- Fall Protection – Guardrails Toe boards etc
- Fall Protection – Leading Edge
- Fall Protection – Personal Fall Protection Devices
- Fire Protection and Fire Prevention
- Hazard Communication (RIGHT TO KNOW)
- Hazardous Energy & Lock Out / Tag Out
- Housekeeping/ Sanitation
- Maintenance and Protection of Traffic (MPT)
- Man Lifts /Aerial Lifts
- Marine Operations
- Motor Vehicle Safety
- Overhead Power lines
- Permit Required Confined Space
- Portable Ladders
- Powered Actuated Tools
- Powered Material Handling Equipment
- Scaffolds – Mobile
- Scaffolds – Stationary
- Scaffolds – Suspended
- Slings
- Steel Erection

- Welding and Cutting (Hot Work)
- Airborne Contaminants – Particulates – General
- Asbestos
- Blood borne Pathogens
- Hearing Protection
- Lead in Construction
- Mercury in Construction
- PCB's
- Respiratory Protection
- Silica
- Thermal Stress
- West Nile Virus
- Rodents and Vermin
- Noise Mitigation Plan

Certain DDC programs, such as Job Order Contracting System (JOCS), may not necessarily require Site Safety Plans. The JOCS contractor will be required to submit a Safety Program. In addition, certain DDC Operating Units may establish program or client-specific safety requirements. The contractor's Site Safety Plan must address such program or client specific safety requirements.

VII. KICK-OFF MEETINGS/PRE-CONSTRUCTION AND SAFETY REVIEW

As part of the construction kick-off meeting, a Site Safety Plan review will be part of the agenda. A QACS representative will participate in this meeting with the contractor prior to the start of the project for the purpose of:

A. Reviewing the safety issues detailed in the contract.
B. Reviewing the Site Safety Plan.
C. Reviewing any new issues or information that was not previously addressed.
D. Discussing planned inspections and audits of the site by DDC personnel.

VIII. EVALUATION DURING WORK IN PROGRESS

The Contractor's adherence to these Safety Requirements will be monitored throughout the project. This will be accomplished by the following:

A. Use of a safety checklist by a representative of the Construction Safety Unit or other designated DDC representative or Consultant during regular, unannounced inspections of the job site. Field Exit Conferences will be held with the RE/CPM, Contractor Superintendents or Safety Representatives.

B. The RE/CPM will continually monitor the safety and environmental performance of the contractor's employees and work methods. Deficiencies shall be brought to the attention of the contractor's representative on site for immediate correction. The DDC representative will maintain a written record of these deficiencies and forward them to the Construction Safety Unit on a weekly basis. Any critical deficiencies shall be immediately reported to QACS phone# (718) 391-1624 or (718) 391-1911.

C. If the Contractor's safety performance during the project is not up to DDC standards (safety performance measure, accident/incident rate, etc.) the Director- QACS, or designee will meet with the Contractor's safety representative, the DDC project manager, the RE/CPM, or the DDC Environmental Specialist (if environmental issues are involved). The purpose of this meeting is to 1) determine the level of non-compliance; 2) explain and clarify the safety/environmental provisions; 3) agree on a future course of action to correct the deficiencies.

D. If the deficiencies continue to occur with inadequate attention by the contractor, this shall, among other remedies available, be grounds for default.

E. The contractor shall inform the Construction Safety Unit and ACCO Insurance and Risk Management Unit of all medical injuries or illnesses that require doctors' treatment resulting from an on-the-job incident within 24 hours of the occurrence. The Construction Safety Unit shall also be immediately informed of all fatalities, catastrophic accidents with more than one employee hospitalized, any injuries to members of the general public and major equipment damage (e.g., property damage, equipment rollovers, loads dropped from crane). QACS shall maintain a record of all contractor injuries and illnesses during the project and provide regular reports to the Agency.

F. The Construction Safety Unit shall be immediately notified at the start of any NYS-DOL/ NYC-COSH/ OSHA/ EPA inspections. The Director of Quality Assurance & Construction Safety shall maintain a log of all contractor OSHA/EPA inspections and citations during the project.

IX. SAFETY PERFORMANCE EVALUATION

The contractor's safety record, including all DDC inspection results, will be considered as part of the Contractor's performance evaluation at the conclusion of the project. Poor safety performance during the course of the project shall be a reason to rate a Contractor unsatisfactory which will be reflected in the City's Vendex system and will be considered for future procurement actions as set forth in the City's Procurement Policy Board Rules.

(NO TEXT ON THIS PAGE)

CITY OF NEW YORK

STANDARD CONSTRUCTION CONTRACT

SEPTEMBER 2008

(NO TEXT ON THIS PAGE)

CITY OF NEW YORK
STANDARD CONSTRUCTION CONTRACT

TABLE OF CONTENTS

CITY OF NEW YORK
STANDARD CONSTRUCTION CONTRACT

TABLE OF CONTENTS

TABLE OF CONTENTS

CHAPTER IX
PARTIAL AND FINAL PAYMENTS

CHAPTER X
CONTRACTOR'S DEFAULT

CHAPTER XI
MISCELLANEOUS PROVISIONS

TABLE OF CONTENTS

CHAPTER XI (CONT'D)
MISCELLANEOUS PROVISIONS

WITNESSETH:

The parties in consideration of the mutual agreements contained herein, agree as follows:

CHAPTER I
THE CONTRACT AND DEFINITIONS

ARTICLE 1. THE CONTRACT

1.1 Except for titles, subtitles, headings, running headlines, tables of content and indices (all of which are printed herein merely for convenience), the following, except for such portions thereof as may be specifically excluded, shall be deemed to be part of this Contract:

1.1.1 All provisions required by law to be inserted in this Contract, whether actually inserted or not;

1.1.2 The Contract Drawings and Specifications;

1.1.3 The General Conditions and Special Conditions, if any;

1.1.4 The Contract;

1.1.5 The Information for Bidders; Request for Proposals; Notice of Solicitation and Proposal For Bids; Bid or Proposal, and, if used, the Bid Booklet;

1.1.6 The Budget Director's Certificate; all Addenda issued prior to the receipt of the bids; the Notice of Award; Performance and Payment Bonds, if required; and the Notice to Proceed with the Work.

1.2 Should any conflict occur in or between the Drawings and Specifications, the Contractor shall be deemed to have estimated the most expensive way of doing the Work, unless the Contractor shall have asked for and obtained a decision in writing from the Commissioner, of the Agency that is entering into this Contract, before the submission of its bid as to what shall govern.

ARTICLE 2. DEFINITIONS

2.1 The following words and expressions, or pronouns used in their stead, shall, wherever they appear in this Contract, be construed as follows, unless a different meaning is clear from the context:

2.1.1 **"Addendum"** or **"Addenda"** shall mean the additional Contract provisions issued in writing by the Commissioner prior to the receipt of bids.

2.1.2 **"Agency"** shall mean a city, county, borough or other office, position, department, division, bureau, board or commission, or a corporation, institution or agency of government, the expenses of which are paid in whole or in part from the City treasury.

2.1.3 **"Agency Chief Contracting Officer" (ACCO)** shall mean a person delegated authority by the Commissioner to organize and supervise the procurement activity of subordinate Agency staff in conjunction with the CCPO.

2.1.4 **"City"** shall mean the City of New York.

2.1.5 **"City Chief Procurement Officer" (CCPO)** shall mean a person delegated authority by the Mayor to coordinate and oversee the procurement activity of Mayoral agency staff, including the ACCO and any offices which have oversight responsibility for the procurement of construction.

2.1.6 **"Commissioner"** shall mean the head of the Agency that has entered into this Contract, or his/her duly authorized representative.

2.1.7 **"Comptroller"** shall mean the Comptroller of the City of New York.

2.1.8 **"Contract"**or **"Contract Documents"** shall mean each of the various parts of the contract referred to in Article 1 hereof, both as a whole and severally.

2.1.9 **"Contract Drawings"** shall mean only those drawings specifically entitled as such and listed in the Specifications or in any Addendum, or any drawings furnished by the Commissioner, pertaining or supplemental thereto.

2.1.10 **"Contract Work"** shall mean everything required to be furnished and done by the Contractor by any one or more of the parts of the Contract referred to in Article 1, except Extra Work as hereinafter defined.

2.1.11 **"Contractor"** shall mean the entity which executed this Contract, whether a corporation, firm, partnership, joint venture, individual, or any combination thereof, and it(s), their, his/ her successors, personal representatives, executors, administrators and assigns, and any person, firm, partnership, joint venture, individual, or corporation which shall at any time be substituted in the place of the Contractor under this Contract.

2.1.12 **"Days"** shall mean calendar days, except where otherwise specified.

2.1.13 **"Engineer"** or **"Architect"** or **"Project Manager"** shall mean the person so designated in writing by the Commissioner to act as such in relation to this Contract, including a private Architect or Engineer or Project Manager, as the case may be.

2.1.14 **"Engineering Audit Officer" (EAO)** shall mean the person so designated by the Commissioner to perform responsible auditing functions hereunder.

2.1.15 **"Extra Work"** shall mean Work other than that required by the Contract at the time of award which is authorized by the Commissioner pursuant to Chapter VI of this Contract.

2.1.16 **"Federal-Aid Contract"** shall mean a contract in which the United States (federal) Government provides financial funding as so designated in the Information for Bidders.

2.1.17 **"Final Acceptance"** shall mean final written acceptance of all the Work by the Commissioner, a copy of which shall be sent to the Contractor.

2.1.18 **"Final Approved Punch List"** shall mean a list, approved in writing by the Engineer, specifying those items of Work to be completed by the Contractor after Substantial Completion and dates for the completion of each item of Work.

2.1.19 **"Law"** or **"Laws"** shall mean the Constitution of the State of New York, the New York City Charter, the New York City Administrative Code, a Statute of the United States or

of the State of New York, a local law of the City of New York, any ordinance, rule or regulation having the force of law, or common law.

2.1.20 **"Materialman"** shall mean any corporation, firm, partnership, joint venture, or individual, other than employees of the Contractor, who or which contracts with the Contractor or any Subcontractor, to fabricate or deliver, or who actually fabricates or delivers, plant, materials or equipment to be incorporated in the Work.

2.1.21 **"Means and Methods of Construction"** shall mean the labor, materials, temporary structures, tools, plant, and construction equipment, and the manner and time of their use, necessary to accomplish the result intended by this Contract.

2.1.22 **"Other Contractor(s)"** shall mean any Contractor (other than the entity which executed this Contract or its Subcontractors) who has a contract with the City for work on or adjacent to the building or site of the Work.

2.1.23 **"Payroll Taxes"** shall mean State Unemployment Insurance ("SUI"), Federal Unemployment Insurance (FUI") and payments pursuant to the Federal Insurance Contributions Act ("FICA").

2.1.24 **"Project"** shall mean the public improvement to which this Contract relates.

2.1.25 **"Procurement Policy Board" (PPB)** shall mean the Agency of the City of New York whose function is to establish comprehensive and consistent procurement policies and rules which shall have broad application throughout the City.

2.1.26 **"Required Quantity"** in a unit price Contract shall mean the actual quantity of any item of Work or materials which is required to be performed or furnished in order to comply with the Contract.

2.1.27 **"Resident Engineer"** shall mean the representative of the Commissioner duly designated by the Commissioner to be his/her representative at the site of the Work.

2.1.28 **"Site"** shall mean the area upon or in which the Contractor's operations are carried on, and such other areas adjacent thereto as may be designated as such by the Engineer.

2.1.29 **"Specifications"** shall mean all of the directions, requirements and standards of performance applying to the Work as hereinafter detailed and designated under the Specifications.

2.1.30 **"Subcontractor"** shall mean any person, firm or corporation, other than employees of the Contractor, who or which contracts with the Contractor or with its Subcontractors to furnish, or actually furnishes labor, or labor and materials, or labor and equipment, at the site. Wherever the word Subcontractor appears, it shall also mean Sub-Subcontractor.

2.1.31 **"Substantial Completion"** shall mean the written determination by the Commissioner that the Work required under this Contract is substantially, but not entirely, complete.

2.1.32 **"Treasurer"** shall mean the Commissioner of the Department of Finance of the City of New York.

2.1.33 **"Work"** shall mean all services required to complete the Project in accordance with the Contract Documents, including without limitation, labor, material, superintendence, management, administration, equipment, and incidentals, and shall include both Contract Work and Extra Work.

CHAPTER II
THE WORK AND ITS PERFORMANCE

ARTICLE 3. CHARACTER OF THE WORK

3.1 Unless otherwise expressly provided in the **Contract Drawings**, **Specifications** and **Addenda**, the **Work** shall be performed in accordance with the best modern practice, utilizing, unless otherwise specified in writing, new and unused materials of standard first grade quality and workmanship and design of the highest quality, to the satisfaction of the **Commissioner**.

ARTICLE 4. MEANS AND METHODS OF CONSTRUCTION

4.1 Unless otherwise expressly provided in the **Contract Drawings**, **Specifications** and **Addenda**, the **Means and Methods of Construction** shall be such as the **Contractor** may choose; subject, however, to the **Engineer's** right to reject the **Means and Methods of Construction** proposed by the **Contractor** which in the opinion of the **Engineer**:

4.1.1 Will constitute or create a hazard to the **Work**, or to persons or property; or

4.1.2 Will not produce finished **Work** in accordance with the terms of the **Contract**; or

4.1.3 Will be detrimental to the overall progress of the **Project**.

4.2 The **Engineer's** approval of the **Contractor's Means and Methods of Construction**, or his/her failure to exercise his/her right to reject such means or methods, shall not relieve the **Contractor** of its obligation to complete the **Work** as provided in this **Contract**; nor shall the exercise of such right to reject create a cause of action for damages.

ARTICLE 5. COMPLIANCE WITH LAWS

5.1 The **Contractor** shall comply with all **Laws** applicable to this **Contract** and to the **Work** to be done hereunder.

5.2 Procurement Policy Board Rules: This **Contract** is subject to the Rules of the **PPB** ("**PPB** Rules") in effect at the time of the bid opening for this **Contract**. In the event of a conflict between the **PPB** Rules and a provision of this **Contract**, the **PPB** Rules shall take precedence.

5.3 Noise control code provisions.

5.3.1 In accordance with the provisions of Section 24-216(b) of the Administrative Code of the **City** ("Administrative Code"), Noise Abatement Contract Compliance, devices and activities which will be operated, conducted, constructed or manufactured pursuant to this **Contract** and which are subject to the provisions of the **City** Noise Control Code shall be operated, conducted, constructed, or manufactured without causing a violation of the Administrative Code. Such devices and activities shall incorporate advances in the art of noise control development for the kind and level of noise

emitted or produced by such devices and activities, in accordance with regulations issued by the **Commissioner** of the Department of Environmental Protection.

5.3.2 The Contractor agrees to comply with Section 24-219 of the Administrative Code of the **City** ("Administrative Code") and implementing rules codified at 15 Rules of the City of New York ("RCNY") Section 28-100 et. seq. In accordance with such provisions, the **Contractor**, if the Contractor is the responsible party under such regulations, shall prepare and post a Construction Noise Mitigation Plan at each work site, in which the **Contractor** shall certify that all construction tools and equipment have been maintained so that they operate at normal manufacturers operating specifications. If the **Contractor** cannot make this certification, it must have in place an Alternative Noise Mitigation Plan approved by the New York City Department of Environmental Protection. In addition, the Contractor's certified Construction Noise Mitigation Plan is subject inspection by the Department of Environmental Protection in accordance with 15 RCNY §28-101. No Contract work may take place at a worksite unless there is a Construction Noise Mitigation Plan or approved Alternative Noise Mitigation Plan in place. In addition, the **Contractor** shall create and implement a noise mitigation training program. Failure to comply with these requirements may result in fines and other penalties pursuant to the applicable provisions of the Administrative Code and RCNY.

5.4 Ultra Low Sulfur Diesel Fuel: In accordance with the provisions of Section 24-163.3 of the Administrative Code, the Contractor specifically agrees as follows:

5.4.1 Definitions. For purposes of this Article 5.4, the following definitions apply:

5.4.1(a) "Contractor" means any person or entity that enters into a Public Works Contract with a City agency, or any person or entity that enters into an agreement with such person or entity, to perform work or provide labor or services related to such Public Works Contract

5.4.1(b) "Motor Vehicle" means any self-propelled vehicle designed for transporting persons or property on a street or highway.

5.4.1(c) "Nonroad Engine" means an internal combustion engine (including the fuel system) that is not used in a Motor Vehicle or a vehicle used solely for competition, or that is not subject to standards promulgated under section 7411 or section 7521 of title 42 of the United States Code, except that this term shall apply to internal combustion engines used to power generators, compressors or similar equipment used in any construction program or project.

5.4.1(d) "Nonroad Vehicle" means a vehicle that is powered by a Nonroad Engine, fifty horsepower and greater, and that is not a Motor Vehicle or a vehicle used solely for competition, which shall include, but not be limited to, excavators, backhoes, cranes, compressors, generators, bulldozers and similar equipment, except that this term shall not apply to horticultural maintenance vehicles used for landscaping purposes that are powered by a Nonroad Engine of sixty-five horsepower or less and that are not used in any construction program or project.

5.4.1(e) "Public Works Contract" means a contract with a City agency for a construction program or project involving the construction, demolition, restoration, rehabilitation, repair, renovation, or abatement of any building, structure, tunnel, excavation, roadway, park or bridge; a contract with a City agency for the preparation for any construction program or project involving the construction, demolition, restoration, rehabilitation, repair, renovation, or abatement of any building, structure, tunnel, excavation, roadway, park or bridge; or a contract with a City agency for any final work involved in the completion of any construction program or project involving the construction, demolition, restoration, rehabilitation, repair, renovation, or abatement of any building, structure, tunnel, excavation, roadway, park or bridge.

5.4.1(f) "Ultra Low Sulfur Diesel Fuel" means diesel fuel that has a sulfur content of no more than fifteen parts per million.

5.4.2 Ultra Low Sulfur Diesel Fuel

5.4.2(a) All Contractors shall use Ultra Low Sulfur Diesel Fuel in diesel-powered Nonroad Vehicles in the performance of this **Contract**.

5.4.2(b) Notwithstanding the requirements of Article 5.4.2(a), Contractors may use diesel fuel that has a sulfur content of no more than thirty parts per million to fulfill the requirements of this Article 5.4.2, where the Commissioner of the New York City Department of Environmental Protection ("DEP Commissioner") has issued a determination that a sufficient quantity of Ultra Low Sulfur Diesel Fuel is not available to meet the needs of City agencies and Contractors. Any such determination shall expire after six months unless renewed.

5.4.2(c) Contractors shall not be required to comply with this Article 5.4.2 where the agency letting this contract makes a written finding, which is approved, in writing, by the DEP Commissioner, that a sufficient quantity of Ultra Low Sulfur Diesel Fuel, or diesel fuel that has a sulfur content of no more than thirty parts per million is not available to meet the requirements of Section 24-163.3 of the Administrative Code, provided that such Contractor in its fulfillment of the requirements of this **Contract**, to the extent practicable, shall use whatever quantity of Ultra Low Sulfur Diesel Fuel or diesel fuel that has a sulfur content of no more than thirty parts per million is available. Any finding made pursuant to this subdivision shall expire after sixty days, at which time the requirements of this Article 5.4.2 shall be in full force and effect unless the Agency renews the finding in writing and such renewal is approved by the DEP Commissioner.

5.4.2(d) Contractors may check on determinations and approvals issued by the DEP Commissioner pursuant to Section 24-163.3 of the Administrative Code, if any, at www.dep.nyc.gov or by contacting the Agency issuing this solicitation.

5.4.2(e) The requirements of this Article 5.4.2 do not apply where they are precluded by federal or State funding requirements or where the **Contract** is an emergency procurement.

5.4.3 Best Available Technology

5.4.3(a) All Contractors shall utilize the best available technology for reducing the emission of pollutants for diesel-powered Nonroad Vehicles in the performance of this **Contract**. For determinations of best available technology for each type of diesel-powered Nonroad Vehicle, Contractors shall comply with the regulations of the City Department of Environmental Protection, as and when adopted, Chapter 14 of Title 15 of the Rules of the City of New York (RCNY). The Contractor shall fully document all steps in the best available technology selection process and shall furnish such documentation to the Agency or the DEP Commissioner upon request. The Contractor shall retain all documentation generated in the best available technology selection process for as long as the selected best available technology is in use.

5.4.3(b) No Contractor shall be required to replace best available technology for reducing the emission of pollutants or other authorized technology utilized for a diesel-powered Nonroad Vehicle in accordance with the provisions of this Article 5.4.3 within three years of having first utilized such technology for such vehicle.

5.4.3(c) This Article 5.4.3 shall not apply to any vehicle used to satisfy the requirements of a specific Public Works Contract for fewer than twenty calendar days.

5.4.3(d) The Contractor shall not be required to comply with this Article 5.4.3 with respect to a diesel-powered Nonroad Vehicle under the following circumstances:

5.4.3(d)(1) Where the agency makes a written finding, which is approved, in writing, by the DEP Commissioner, that the best available technology for reducing the emission of pollutants as required by those paragraphs is unavailable for such vehicle, Contractor shall use whatever technology for reducing the emission of pollutants, if any, is available and appropriate for such vehicle.

5.4.3(d)(2) Where the DEP Commissioner has issued a written waiver based upon the Contractor having demonstrated to the DEP Commissioner that the use of the best available technology for reducing the emission of pollutants might endanger the operator of such vehicle or those working near such vehicle, due to engine malfunction, Contractor shall use whatever technology for reducing the emission of pollutants, if any, is available and appropriate for such vehicle, which would not endanger the operator of such vehicle or those working near such vehicle.

5.4.3(d)(3) In determining which technology to use for the purposes of Articles 5.4.3(d)(1) and 5.4.3(d)(2) above, Contractor shall primarily consider the reduction in emissions of particulate matter and secondarily consider the reduction in emissions of nitrogen oxides associated with the use of such technology, which shall in no event result in an increase in the emissions of either such pollutant.

5.4.3(d)(4) Contractors shall submit requests for a finding or a waiver pursuant to this Article 5.4.3(d) in writing to the DEP Commissioner, with a copy to the ACCO of the Agency issuing the solicitation. Any finding or waiver made or issued pursuant to Articles 5.4.3(d)(1) and 5.4.3(d)(2) above shall expire after one hundred eighty days, at which time the requirements of Article 5.4.3(a) shall be in full force and effect unless the Agency renews the finding, in writing, and the DEP Commissioner approves such finding, in writing, or the DEP Commissioner renews the waiver, in writing.

5.4.3(e) The requirements of this Article 5.4.3 do not apply where they are precluded by federal or State funding requirements or where the contract is an emergency procurement.

5.4.4 Section 24-163 of the Administrative Code. Contractors shall comply with Section 24-163 of the Administrative Code related to the idling of the engines of motor vehicles while parking.

5.4.5 Compliance

5.4.5(a) Contractor's compliance with Article 5.4 may be independently monitored. If it is determined that the Contractor has failed to comply with any provision of Article 5.4, any costs associated with any independent monitoring incurred by the City shall be reimbursed by the Contractor.

5.4.5(b) Any Contractor who violates any provision of Article 5.4, except as provided in Article 5.4.5(c) below, shall be liable for a civil penalty between the amounts of one thousand and ten thousand dollars, in addition to twice the amount of money saved by such Contractor for failure to comply with Article 5.4.

5.4.5(c) No Contractor shall make a false claim with respect to the provisions of Article 5.4 to a City agency. Where a Contractor has been found to have done so, such Contractor shall be liable for a civil penalty of twenty thousand dollars, in addition to twice the amount of money saved by such Contractor in association with having made such false claim.

5.4.6 Reporting

5.4.6(a) For all Public Works Contracts covered by this Article 5.4, the Contractor shall report to the Department the following information:

5.4.6(1) The total number of diesel-powered Nonroad Vehicles used to fulfill the requirements of this Public Works Contract;

5.4.6(2) The number of such Nonroad Vehicles that were powered by Ultra Low Sulfur Diesel Fuel;

5.4.6(3) The number of such Nonroad Vehicles that utilized the best available technology for reducing the emission of pollutants, including a breakdown by vehicle model and the type of technology;

5.4.6(4) The number of such Nonroad Vehicles that utilized such other authorized technology in accordance with Article 5.4.3, including a breakdown by vehicle model and the type of technology used for each such vehicle;

5.4.6(5) The locations where such Nonroad Vehicles were used; and

5.4.6(6) Where a determination is in effect pursuant to Article 5.4.2(b) or 5.4.2(c), detailed information concerning the Contractor's efforts to obtain Ultra Low Sulfur Diesel Fuel or diesel fuel that has a sulfur content of no more than thirty parts per million.

5.4.6(b) The Contractor shall submit the information required by Article 5.4.6(a) at the completion of work under the Public Works Contract and on a yearly basis no later than August 1 throughout the term of the Public Works Contract. The yearly report shall cover work performed the preceding fiscal year (July 1 - June 30).

5.5 Ultra Low Sulfur Diesel Fuel. In accordance with the Coordinated Construction Act for Lower Manhattan, as amended:

5.5.1 Definitions. For purposes of this Article 5.5, the following definitions apply:

5.5.1(a) "Lower Manhattan" means the area to the south of and within the following lines: a line beginning at a point where the United States pierhead line in the Hudson river as it exists now or may be extended would intersect with the southerly line of West Houston street in the borough of Manhattan extended, thence easterly along the southerly side of West Houston street to the southerly side of Houston street, thence easterly along the southerly side of Houston street to the southerly side of East Houston street, thence northeasterly along the southerly side of East Houston street to the point where it would intersect with the United States pierhead line in the East river as it exists now or may be extended, including tax lots within or immediately adjacent thereto.

5.5.1(b) "Lower Manhattan Redevelopment Project" means any project in Lower Manhattan that is funded in whole or in part with federal or State funding, or any project intended to improve transportation between Lower Manhattan and the two air terminals in the City of New York known as LaGuardia Airport and John F. Kennedy International Airport, or between Lower Manhattan and the air terminal in Newark known as Newark Liberty International Airport, and that is funded in whole or in part with federal funding.

5.5.1(c) "Nonroad Engine" means an internal combustion engine (including the fuel system) that is not used in a Motor Vehicle or a vehicle used solely for competition, or that is not subject to standards promulgated under section 7411 or section 7521 of title 42 of the United States Code, except that this term shall apply to internal combustion engines used to power generators, compressors or similar equipment used in any construction program or project.

5.5.1(d) "Nonroad Vehicle" means a vehicle that is powered by a Nonroad Engine, fifty horsepower and greater, and that is not a Motor Vehicle or a vehicle used solely for competition, which shall include, but not be limited to, excavators, backhoes, cranes, compressors, generators, bulldozers and similar equipment, except that this terms shall not apply to horticultural maintenance vehicles used for landscaping purposes that are powered by a Nonroad Engine of sixty-five horsepower or less and that are not used in any construction program or project.

5.5.1(e) "Ultra Low Sulfur Diesel Fuel" means diesel fuel that has a sulfur content of no more than fifteen parts per million.

5.5.2 Requirements. **Contractors** and **Subcontractors** are required to use only Ultra Low Sulfur Diesel Fuel to power the diesel-powered Nonroad Vehicles with engine horsepower (HP) rating of 50 HP and above used on a Lower Manhattan Redevelopment Project and, where practicable, to reduce the emission of pollutants by retrofitting such Nonroad Vehicles with oxidation catalysts, particulate filters, or technology that achieves lowest particulate matter emissions.

5.6 Pesticides. In accordance with Section 17-1209 of the Administrative Code, to the extent that the **Contractor** or any **Subcontractor** applies pesticides to any property owned or leased by the **City**, the **Contractor** and any **Subcontractor** shall comply with chapter 12 of the Administrative Code.

ARTICLE 6. INSPECTION

6.1 During the progress of the **Work** and up to the date of **Final Acceptance**, the **Contractor** shall at all times afford the representatives of the **City** every reasonable, safe and proper facility for inspecting all **Work** done or being done at the **Site** and also for inspecting the manufacture or preparation of materials and equipment at the place of such manufacture or preparation.

6.2 The **Contractor's** obligation hereunder shall include the uncovering or taking down of finished **Work** and its restoration thereafter; provided, however, that the order to uncover, take down and restore shall be in writing, and further provided that if **Work** thus exposed proves satisfactory, and if the **Contractor** has complied with Article 6.1, such uncovering or taking down and restoration shall be considered an item of **Extra Work** to be paid for in accordance with the provisions of Article 26. If the **Work** thus exposed proves unsatisfactory, the **City** has no obligation to compensate the **Contractor** for the uncovering, taking down or restoration.

6.3 Inspection and approval by the **Commissioner**, the **Engineer**, **Project Manager**, or **Resident Engineer**, of finished **Work** or of **Work** being performed, or of materials and equipment at the place of manufacture or preparation, shall not relieve the **Contractor** of its obligation to perform the **Work** in strict accordance with the **Contract**. Finished or unfinished **Work** not found to be in strict accordance with the **Contract** shall be replaced as directed by the **Engineer**, even though such **Work** may have been previously approved and paid for. Such corrective work is **Contract Work** and shall not be deemed **Extra Work**.

6.4 Rejected **Work** and materials shall be promptly taken down and removed from the **Site**, which must at all times be kept in a reasonably clean and neat condition.

ARTICLE 7. PROTECTION OF WORK AND OF PERSONS AND PROPERTY; NOTICES AND INDEMNIFICATION

7.1 During the performance of the **Work** and up to the date of **Final Acceptance**, the **Contractor** shall be under an absolute obligation to protect the finished and unfinished **Work** against any damage, loss, injury, theft and/or vandalism and in the event of such damage, loss, injury, theft and/or vandalism, it shall promptly replace and/or repair such **Work** at the **Contractor's** sole cost and expense, as directed by the **Resident Engineer**. The obligation to deliver finished **Work** in strict accordance with the **Contract** prior to **Final Acceptance** shall be absolute and shall not be affected by the **Resident Engineer's** approval of, or failure to prohibit, the **Means and Methods of Construction** used by the **Contractor**.

7.2 During the performance of the **Work** and up to the date of **Final Acceptance**, the **Contractor** shall take all reasonable precautions to protect the persons and property of the **City** and of others from damage, loss or injury resulting from the **Contractor's**, and/or its **Subcontractors'** operations under this **Contract.** The **Contractor's** obligation to protect shall include the duty to provide, place or replace and adequately maintain at or about the **Site** suitable and sufficient protection such as lights, barricades, and enclosures.

7.3 The **Contractor** shall comply with the notification requirements set forth below in the event of any loss, damage or injury to **Work**, persons or property, or any accidents arising out of the operations of the **Contractor** and/or its **Subcontractors** under this **Contract**.

7.3.1 The **Contractor** shall make a full and complete report in writing to the **Resident Engineer** within three (3) **Days** after the occurrence.

7.3.2 The **Contractor** shall notify in writing the commercial general liability insurance carrier, and, where applicable, the worker's compensation and/or other insurance carrier, of any such loss, damage, injury, or accident, and any claim or suit arising therefrom, immediately, but not later than 20 days after such event. The **Contractor's** notice to the commercial general liability insurance carrier must expressly specify that "this notice is being given on behalf of the City of New York as Additional Insured as well as [the Contractor] as Named Insured." The Contractor's notice to the insurance carrier shall contain the following information: the name of the **Contractor**, the number of the **Contract**, the date of the occurrence, the location (street address and borough) of the occurrence, and the identity of the persons or things injured, damaged or lost.

7.3.2(a) At the time notice is provided to the insurance carrier(s), the **Contractor** shall provide copies of such notice to the **Comptroller** and the **Commissioner**. Notice to the **Comptroller** shall be sent to the Insurance Unit, NYC Comptroller's Office, 1 Centre Street – Room 1222, New York, New York, 10007. Notice to the **Commissioner** shall be sent to the address set forth in Schedule A of the General Conditions.

7.3.2(b) If the **Contractor** fails to provide any of the foregoing notices to any appropriate insurance carrier(s) in a timely and complete manner, the **Contractor** shall indemnify the City for all losses, judgments, settlements and expenses, including reasonable attorneys' fees, arising from an insurer's disclaimer of coverage citing late notice by or on behalf of the City.

7.4 To the fullest extent permitted by law, the **Contractor** shall indemnify, defend and hold the **City**, its employees and agents (the "Indemnitees") harmless against any and all claims (including but not limited to claims asserted by any employee of the **Contractor** and/or its **Subcontractors)** and costs and expenses of whatever kind (including but not limited to payment or reimbursement of attorneys' fees and disbursements) allegedly arising out of or in any way related to the operations of the **Contractor** and/or its **Subcontractors** in the performance of this **Contract** or from the **Contractor's** and/or its **Subcontractors'** failure to comply with any of the provisions of this **Contract** or of the **Law**. Such costs and expenses shall include all those incurred in defending the underlying claim and those incurred in connection with the enforcement of this Article 7.4 by way of cross-claim, third-party

claim, declaratory action or otherwise. The parties expressly agree that the indemnification obligation hereunder contemplates (1) full indemnity in the event of liability imposed against the Indemnitees without negligence and solely by reason of statute, operation of law or otherwise; and (2) partial indemnity in the event of any actual negligence on the part of the Indemnitees either causing or contributing to the underlying claim (in which case, indemnification will be limited to any liability imposed over and above that percentage attributable to actual fault whether by statute, by operation of law, or otherwise). Where partial indemnity is provided hereunder, all costs and expenses shall be indemnified on a pro rata basis.

7.4.1 Indemnification under Article 7.4 or any other provision of the **Contract** shall operate whether or not **Contractor** or its **Subcontractors** have placed and maintained the insurance specified under Article 22.

7.5 The **Contractor** waives all rights against the **City** for any damages or losses for which either is covered under any insurance required under Article 22 (whether or not such insurance is actually procured) or any other insurance applicable to the operations of the **Contractor** and/or its **Subcontractors** in the performance of this **Contract**.

7.6 The provisions of this Article shall not be deemed to create any new right of action in favor of third parties against the **Contractor** or the **City**.

CHAPTER III
TIME PROVISIONS

ARTICLE 8. COMMENCEMENT AND PROSECUTION OF THE WORK

8.1 The **Contractor** shall commence **Work** on the date specified in a written notice signed by the **Commissioner**. The time for performance of the **Work** under the **Contract** shall be computed from the date specified in such written notice. **TIME BEING OF THE ESSENCE** to the **City**, the **Contractor** shall thereafter prosecute the **Work** diligently, using such **Means and Methods of Construction** as are in accord with Article 4 herein and as will assure its completion not later than the date specified herein, or on the date to which the time for completion may be extended.

ARTICLE 9. PROGRESS SCHEDULES

9.1 To enable the **Work** to be performed in an orderly and expeditious manner, the **Contractor**, within fifteen (15) **Days** after the Notice to Proceed with this **Contract**, unless otherwise directed by the **Engineer**, shall submit to the **Engineer** a proposed progress schedule in the form of a bar graph or in such other form as specified by the **Engineer**, and monthly cash flow requirements, showing:

9.1.1 The anticipated time of commencement and completion of each of the various operations to be performed under this **Contract**; and

9.1.2 The sequence and interrelation of each of these operations with the others and with those of other related **Contracts**; and

9.1.3 The estimated time required for fabrication or delivery, or both, of all materials and equipment required for the **Work**; and

9.1.4 The estimated amount in dollars the **Contractor** will claim on a monthly basis.

9.2 The proposed schedule shall be revised as directed by the **Engineer**, until finally approved by the Engineer, and after such approval, subject to the provisions of Article 11, shall be strictly adhered to by the **Contractor**.

9.3 If the **Contractor** shall fail to adhere to the approved progress schedule, or to the schedule as revised pursuant to Article 11, it shall promptly adopt such other or additional **Means and Methods of Construction** as will make up for the time lost and will assure completion in accordance with the approved progress schedule. The approval by the City of a progress schedule which is shorter than the time allotted under the **Contract** shall not create any liability for the **City** if the approved progress schedule is not met.

9.4 The **Contractor** will not receive any payments until the proposed progress schedule is submitted.

ARTICLE 10. REQUESTS FOR INFORMATION OR APPROVAL

10.1 From time to time as the **Work** progresses and in the sequence indicated by the approved progress schedule, the **Contractor** shall submit to the **Engineer** a specific request in writing for each item of information or approval required by the **Contractor**. These requests shall state the latest date upon which the information or approval is actually required by the **Contractor**, and shall be submitted in a reasonable time in advance thereof to enable the **Engineer** a sufficient time to act upon such submissions, or any necessary re-submissions thereof.

10.2 The **Contractor** shall not have any right to an extension of time on account of delays due to the **Contractor's** failure to submit requests for the required information or the required approval in accordance with the above requirements.

ARTICLE 11. NOTICE OF CONDITIONS CAUSING DELAY AND DOCUMENTATION OF DAMAGES CAUSED BY DELAY

11.1 After the commencement of any condition which is causing or may cause a delay in completion of the **Work**, including conditions for which the **Contractor** may be entitled to an extension of time, the following notifications and submittals are required:

11.1.1 Within seven (7) **Days** after the commencement of such condition, the **Contractor** must notify the **Engineer** in writing of the existence, nature and effect of such condition upon the approved progress schedule and the **Work**, and must state why and in what respects, if any, the condition is causing or may cause a delay.

11.1.2 If the **Contractor** shall claim to be sustaining damages for delay, by reason of any act or omission of the **City** or its agents, it shall submit to the **Commissioner** within forty-five (45) **Days** from the time such damages are first incurred, and every thirty (30) **Days** thereafter for as long as such damages are incurred, verified statements of the details and the amounts of such damages, together with documentary evidence of such damages. The **Contractor** may submit any of the above statements within such additional time as may be granted by the **Commissioner** in writing upon written request therefor. Failure of the **Commissioner** to respond in writing to a written request for additional time within thirty (30) **Days** shall be deemed a denial of the request. On failure of the **Contractor** to fully comply with the foregoing provisions, such claims shall be deemed waived and no right to recover on such claims shall exist. Damages that the **Contractor** may claim in any action arising under or by reason of this **Contract** shall not be different from or in excess of the statements made and documentation provided pursuant to this article.

11.2 Failure of the **Contractor** to strictly comply with the requirements of Article 11.1.1 may, in the discretion of the **Commissioner**, be deemed sufficient cause to deny any extension of time on account of delay arising out of such condition. Failure of the **Contractor** to strictly comply with the requirements of Articles 11.1.1 and 11.1.2 shall be deemed a conclusive waiver by the **Contractor** of any and all claims for damages for delay arising from such condition and no right to recover on such claims shall exist.

11.3 When appropriate and directed by the **Engineer**, the progress schedule shall be revised by the **Contractor** until finally approved by the **Engineer**. The revised progress schedule must be strictly adhered to by the **Contractor**.

ARTICLE 12. COORDINATION WITH OTHER CONTRACTORS

12.1 During the progress of the **Work**, **Other Contractors** may be engaged in performing other work or may be awarded other contracts for additional work on this **Project**. In that event, the **Contractor** shall coordinate the **Work** to be done hereunder with the work of such **Other Contractors** and the **Contractor** shall fully cooperate with such **Other Contractors** and carefully fit its own **Work** to that provided under other contracts as may be directed by the **Engineer**. The **Contractor** shall not commit or permit any act which will interfere with the performance of work by any **Other Contractors**.

12.2 If the **Engineer** shall determine that the **Contractor** is failing to coordinate its **Work** with the work of **Other Contractors** as the **Engineer** has directed, then the **Commissioner** shall have the right to withhold any payments otherwise due hereunder until the **Contractor** completely complies with the **Engineer's** directions.

12.3 The **Contractor** shall notify the **Engineer** in writing if any **Other Contractor** on this **Project** is failing to coordinate its work with the **Work** of this **Contract**. If the **Engineer** finds such charges to be true, the **Engineer** shall promptly issue such directions to the **Other Contractor** with respect thereto as the situation may require. The **City** shall not, however, be liable for any damages suffered by any **Other Contractor's** failure to coordinate its work with the **Work** of this **Contract** or by reason of the **Other Contractor's** failure to promptly comply with the directions so issued by the **Engineer**, or by reason of any **Other Contractor's** default in performance, it being understood that the **City** does not guarantee the responsibility or continued efficiency of any contractor. The **Contractor** agrees to make no claim against the **City** for any damages relating to or arising out of any directions issued by the **Engineer** pursuant to this article (including but not limited to the failure of any **Other Contractor** to comply or promptly comply with such directions), or the failure of the **Engineer** to issue any directions, or the failure of any **Other Contractor** to coordinate its work, or the default in performance of any **Other Contractor**.

12.4 The **Contractor** shall indemnify and hold the **City** harmless from any and all claims or judgments for damages and from costs and expenses to which the **City** may be subjected or which it may suffer or incur by reason of the **Contractor's** failure to comply with the **Engineer's** directions promptly; and the **Comptroller** shall have the right to exercise the powers reserved in Article 23 with respect to any claims which may be made for damages due to this **Contractor's** failure to comply with the **Engineer's** direction promptly. Insofar as the facts and **Law** relating to any claim would preclude the **City** from being completely indemnified by the **Contractor**, the **City** shall be partially indemnified by the **Contractor** to the fullest extent provided by **Law**.

12.5 Should the **Contractor** sustain any damage through any act or omission of any **Other Contractor** having a contract with the **City** for the performance of work upon the **Site** or of work which may be necessary to be performed for the proper prosecution of the **Work** to be performed hereunder, or through any act or omission of a **Subcontractor** of such **Contractor**, the **Contractor** shall have no claim against the **City** for such damage, but shall have a right to recover such damage from the **Other Contractor** under the provision similar to the following provisions which apply to this **Contract** and have been or will be inserted in the contracts with such **Other Contractors**:

12.5.1 Should any **Other Contractor** having or who shall hereafter have a contract with the **City** for the performance of work upon the **Site** sustain any damage through any act or omission of the **Contractor** hereunder or through any act or omission of any **Subcontractor** of the **Contractor**, the **Contractor** agrees to reimburse such **Other Contractor** for all such damages and to defend at its own expense any suit based upon such claim and if any judgment or claims (even if the allegations of the suit are without merit) against the **City** shall be allowed the **Contractor** shall pay or satisfy such judgment or claim and pay all costs and expenses in connection therewith and agrees to indemnify and hold the **City** harmless from all such claims. Insofar as the facts and **Law** relating to any claim would preclude the **City** from being completely indemnified by the **Contractor**, the **City** shall be partially indemnified by the **Contractor** to the fullest extent provided by **Law**.

12.6 The **City's** right to indemnification hereunder shall in no way be diminished, waived or discharged, by its recourse to assessment of liquidated damages as provided in Article 15, or by the exercise of any other remedy provided for by **Contract** or by **Law**.

ARTICLE 13. EXTENSION OF TIME FOR PERFORMANCE

13.1 If performance by the **Contractor** is delayed for a reason set forth in Article 13.3, the **Contractor** may be allowed a reasonable extension of time in conformance with this article and the **PPB** Rules.

13.2 Any extension of time may be granted only by the **Commissioner** or by the Board for the Extension of Time (hereafter "Board") (as set forth below) upon written application by the **Contractor**.

13.3 Grounds for Extension: If such application is made, the **Contractor** shall be entitled to an extension of time for delay in completion of the **Work** caused solely:

13.3.1 By the acts or omissions of the **City**, its officers, agents or employees; or

13.3.2 By the act or omissions of **Other Contractors** on this **Project**; or

13.3.3 By supervening conditions entirely beyond the control of either party hereto (such as, but not limited to, acts of God or the public enemy, excessive inclement weather, war or other national emergency making performance temporarily impossible or illegal, or strikes or labor disputes not brought about by any act or omission of the **Contractor**).

13.3.4 The **Contractor** shall, however, be entitled to an extension of time for such causes only for the number of **Days** of delay which the **Commissioner** or the Board may determine to be due solely to such causes, and then only if the **Contractor** shall have strictly complied with all of the requirements of Articles 9 and 10.

13.4 The **Contractor** shall not be entitled to receive a separate extension of time for each of several causes of delay operating concurrently, but, if at all, only for the actual period of delay in completion of the **Work** as determined by the **Commissioner** or the Board, irrespective of the number of causes contributing to produce such delay. If one of several causes of delay operating concurrently results from any act, fault or omission of the **Contractor** or of its **Subcontractors** or **Materialmen**, and would of itself (irrespective of the concurrent causes) have delayed the **Work**, no extension of time will be allowed for the period of delay resulting from such act, fault or omission.

13.5 The determination made by the **Commissioner** or the Board on an application for an extension of time shall be binding and conclusive on the **Contractor**.

13.6 The granting of an application for an extension of time for causes of delay other than those herein referred to shall be entirely within the discretion of the **Commissioner** or the Board.

13.7 Permitting the **Contractor** to continue with the **Work** after the time fixed for its completion has expired, or after the time to which such completion may have been extended has expired, or the making of any payment to the **Contractor** after such time, shall in no way operate as a waiver on the part of the **City** of any of its rights under this **Contract**.

13.8 Application for Extension of Time:

13.8.1 Before the **Contractor's** time extension request will be considered, the **Contractor** shall notify the **Commissioner** of the condition which allegedly has caused or is causing the delay, and shall submit a written application to the **Commissioner** identifying:

13.8.1(a) The **Contractor**; the registration number; and **Project** description;

13.8.1(b) Liquidated damage assessment rate, as specified in the **Contract**;

13.8.1(c) Original bid amount;

13.8.1(d) The original **Contract** start date and completion date;

13.8.1(e) Any previous time extensions granted (number and duration); and

13.8.1(f) The extension of time requested.

13.8.2 In addition, the application for extension of time shall set forth in detail:

13.8.2(a) The nature of each alleged cause of delay in completing the **Work**;

13.8.2(b) The date upon which each such cause of delay began and ended and the number of **Days** attributable to each such cause;

13.8.2(c) A statement that the **Contractor** waives all claims except for those delineated in the application, and the particulars of any claims which the **Contractor** does not agree to waive. For time extensions for **Substantial Completion** and final completion payments, the application shall include a detailed statement of the dollar amounts of each element of claim item reserved; and

13.8.2(d) A statement indicating the **Contractor's** understanding that the time extension is granted only for purposes of permitting continuation of **Contract** performance and payment for **Work** performed and that the **City** retains its right to conduct an investigation and assess liquidated damages as appropriate in the future.

13.9 Analysis and Approval of Time Extensions:

13.9.1 For time extensions for partial payments, a written determination shall be made by the **Commissioner** who may, for good and sufficient cause, extend the time for the performance of the **Contract** as follows:

13.9.1(a) If the **Work** is to be completed within six (6) months, the time for performance may be extended for sixty (60) **Days**;

13.9.1(b) If the **Work** is to be completed within less than one (1) year but more than six (6) months, an extension of ninety (90) **Days** may be granted;

13.9.1(c) If the **Contract** period exceeds one (1) year, besides the extension granted in Article 13.9.1(b), an additional thirty (30) **Days** may be granted for each multiple of six (6) months involved beyond the one (1) year period; or

13.9.1(d) If exceptional circumstances exist, the **Commissioner** may extend the time for performance beyond the extensions in Articles 13.9.1(a), 13.9.1(b), and 13.9.1(c). In that event, the **Commissioner** shall file with the Mayor's Office of Contract Services a written explanation of the exceptional circumstances.

13.9.2 For extensions of time for **Substantial Completion** and final completion payments, the **Engineer**, in consultation with the **Commissioner**, shall prepare a written analysis of the delay (including a preliminary determination of the causes of delay, the beginning and end dates for each such cause of delay, and whether the delays are excusable under the terms of this **Contract**). The report shall be subject to review by and approval of the Board, which shall have authority to question its analysis and determinations and request additional facts or documentation. The report as reviewed and made final by the Board shall be made a part of the **Agency Contract** file. Neither the report itself nor anything contained therein shall operate as a waiver or release of any claim the **City** may have against the **Contractor** for either actual or liquidated damages.

13.9.3 Approval Mechanism for Time Extensions for **Substantial Completion** or Final Completion Payments: An extension shall be granted only with the approval of the Board which is comprised of the **ACCO** of the **Agency**, the Corporation Counsel and the **Comptroller**, or their authorized representatives.

13.9.4 Neither the granting of any application for an extension of time to the **Contractor** or any other **Contractor** on this **Project** nor the papers, records or reports related to any application for or grant of an extension of time or determination related thereto shall be referred to or offered in evidence by the **Contractor** or its attorneys in any action or proceeding.

13.10 No Damage for Delay: The **Contractor** agrees to make no claim for damages for delay in the performance of this **Contract** occasioned by any act or omission to act of the **City** or any of its representatives, and agrees that all it may be entitled to on account of any such delay is an extension of time to complete performance of the **Work** as provided herein.

ARTICLE 14. COMPLETION AND FINAL ACCEPTANCE OF THE WORK

14.1 Date for **Substantial Completion**: The **Contractor** shall substantially complete the **Work** within the time fixed in Schedule A of the General Conditions, or within the time to which such **Substantial Completion** may be extended.

14.2 Determining the Date of **Substantial Completion**: The **Work** will be deemed to be substantially complete when the two conditions set forth in Articles 14.2.1 and 14.2.2 have been met. The **Commissioner** will then issue a Certificate of **Substantial Completion**.

14.2.1 Inspection: The **Engineer** has inspected the **Work** and has made a written determination that it is substantially complete.

14.2.2 Approval of Final Punch List and Date for **Final Acceptance**: Following inspection of the **Work**, the **Engineer** shall furnish the **Contractor** a final punch list, specifying all items of **Work** to be completed. The **Contractor** shall then submit to the **Engineer** dates for the completion of each specified item of **Work**. Within a reasonable time after receipt, the **Engineer**, in a written notification to the **Contractor**, shall approve the **Contractor's** completion dates or, if they are unable to agree, shall establish dates for the completion of each item of **Work**. The latest completion date specified shall be the date for **Final Acceptance** of the **Work**.

14.3 Determining the Date of **Final Acceptance**: The **Work** will be accepted as final and complete as of the date of the **Engineer's** inspection if, upon such inspection, the **Engineer** finds that all items on the **Final Approved Punch List** are complete and no further **Work** remains to be done. The **Commissioner** will then issue a written determination of **Final Acceptance**.

14.4 Request for Inspection: Inspection of the **Work** by the **Engineer** for the purpose of **Substantial Completion** or **Final Acceptance** shall be made within ten (10) **Days** after receipt of the **Contractor's** written request therefor.

14.5 Request for Re-inspection: If upon inspection for the purpose of **Substantial Completion** or **Final Acceptance**, the **Engineer** determines that there are items of **Work** still to be performed, the **Contractor** shall promptly perform them and then request a re-inspection. If upon re-inspection, the **Engineer** determines that the **Work** is substantially complete or finally accepted, the date of such re-inspection shall be the date of **Substantial Completion** or **Final Acceptance**. Re-inspection by the **Engineer** shall be made within ten (10) **Days** after receipt of the **Contractor's** written request therefor.

14.6 Initiation of Inspection by the **Engineer**: If the **Contractor** does not request inspection or re-inspection of the **Work** for the purpose of **Substantial Completion** or **Final Acceptance**, the **Engineer** may initiate such inspection or re-inspection.

ARTICLE 15. LIQUIDATED DAMAGES

15.1 In the event the **Contractor** fails to complete the **Work** within the time fixed for such completion in Schedule A of the General Conditions, plus authorized time extensions, or if the **Contractor**, in the sole determination of the **Commissioner**, has abandoned the **Work**, the **Contractor** shall pay to the **City** the sum fixed in Schedule A of the General Conditions, for each and every **Day** that the time consumed in completing the **Work** exceeds the time allowed therefor; which said sum, in view of the difficulty of accurately ascertaining the loss which the **City** will suffer by reason of delay in the completion of the **Work** hereunder, is hereby fixed and agreed as the liquidated damages that the **City** will suffer by reason of such delay, and not as a penalty. This article shall apply to the **Contractor** if it is defaulted pursuant to Chapter X of this **Contract**. Neither the failure to assess liquidated damages nor the granting of any time extension shall operate as a waiver or release of any claim the **City** may have against the **Contractor** for either actual or liquidated damages.

15.2 Liquidated damages received hereunder are not intended to be nor shall they be treated as either a partial or full waiver or discharge of the **City's** right to indemnification, or the **Contractor's** obligation to indemnify the **City**, or to any other remedy provided for in this **Contract** or by **Law**.

15.3 The **Commissioner** may deduct and retain out of the monies which may become due hereunder, the amount of any such liquidated damages; and in case the amount which may become due hereunder shall be less than the amount of liquidated damages suffered by the **City**, the **Contractor** shall be liable to pay the difference.

ARTICLE 16. OCCUPATION OR USE PRIOR TO COMPLETION

16.1 Unless otherwise provided for in the specifications, the **Commissioner** may take over, use, occupy or operate any part of the **Work** at any time prior to **Final Acceptance**, upon written notification to the **Contractor**. The **Engineer** shall inspect the part of the **Work** to be taken over, used, occupied, or operated, and will furnish the **Contractor** with a written statement of the **Work**, if any, which remains to be performed on such part. The **Contractor** shall not object to, nor interfere with, the **Commissioner's** decision to exercise the rights granted by this article. In the event the **Commissioner** takes over, uses, occupies, or operates any part of the **Work**:

16.1.1 the **Commissioner** shall issue a written determination of **Substantial Completion** with respect to such part of the **Work**;

16.1.2 the **Contractor** shall be relieved of its absolute obligation to protect such part of the unfinished **Work** in accordance with Article 7;

16.1.3 the **Contractor's** guarantee on such part of the **Work** shall begin on the date of such use by the **City**; and;

16.1.4 the **Contractor** shall be entitled to a return of so much of the amount retained in accordance with Article 21 as it relates to such part of the **Work**, except so much thereof as may be retained under Articles 24 and 44.

CHAPTER IV
SUBCONTRACTS AND ASSIGNMENTS

ARTICLE 17. SUBCONTRACTS

17.1 The **Contractor** shall not make subcontracts totaling an amount more than the percentage of the total **Contract** price fixed in Schedule A of the General Conditions, without prior written permission from the **Commissioner**. All subcontracts made by the **Contractor** shall be in writing. No work may be performed by a **Subcontractor** prior to the **Contractor** entering into a written subcontract with the **Subcontractor** and complying with the provisions of this Article 17.

17.2 Before making any subcontracts, the **Contractor** shall submit a written statement to the **Commissioner** giving the name and address of the proposed **Subcontractor**, the portion of the **Work** and materials which it is to perform and furnish, the cost of the subcontract, the VENDEX questionnaire if required, and any other information tending to prove that the proposed **Subcontractor** has the necessary facilities, skill, integrity, past experience and financial resources to perform the **Work** in accordance with the terms and conditions of this **Contract**.

17.3 If an approved **Subcontractor** elects to subcontract any portion of its subcontract, the proposed sub-subcontract shall be submitted in the same manner as directed above.

17.4 The **Commissioner** will notify the **Contractor** in writing whether the proposed **Subcontractor** is qualified or not qualified. If the proposed **Subcontractor** is not qualified, the **Contractor** may submit another proposed **Subcontractor** unless the **Contractor** decides to do the **Work**. No **Subcontractor** shall be permitted on the **Site** unless approved.

17.5 Before entering into any subcontract hereunder, the **Contractor** shall inform the **Subcontractor** fully and completely of all provisions and requirements of this **Contract** relating either directly or indirectly to the **Work** to be performed and the materials to be furnished under such subcontract, and every such **Subcontractor** shall

expressly stipulate that all labor performed and materials furnished by the **Subcontractor** shall strictly comply with the requirements of this **Contract**.

17.6 Documents given to a **Subcontractor** for the purpose of soliciting the **Subcontractor's** bid shall include either a copy of the bid cover or a separate information sheet setting forth the **Project** name, the **Contract** number (if available), the **Agency** (as noted in Article 2.1.6), and the **Project's** location.

17.7 The **Commissioner's** approval of a **Subcontractor** shall not relieve the **Contractor** of any of its responsibilities, duties and liabilities hereunder. The **Contractor** shall be solely responsible to the **City** for the acts or defaults of its **Subcontractor** and of such **Subcontractor's** officers, agents and employees, each of whom shall, for this purpose, be deemed to be the agent or employee of the **Contractor** to the extent of its subcontract.

17.8 The **Contractor** shall be responsible for ensuring that all **Subcontractors** performing **Work** at the **Site** have either their own insurance coverage or are covered by the **Contractor's** insurance as required by Article 22.

17.9 The **Contractor** shall promptly, upon request, file with the **Engineer** a conformed copy of the subcontract and its cost. The subcontract shall provide the following:

17.9.1 Payment to **Subcontractors**: The agreement between the **Contractor** and its **Subcontractors** shall contain the same terms and conditions as to method of payment for **Work**, labor and materials, and as to retained percentages, as are contained in this **Contract**.

17.9.2 Prevailing Rate of Wages: The agreement between the **Contractor** and its **Subcontractors** shall include the prevailing wage rates and supplemental benefits to be paid in accordance with Labor Law Section 220.

17.9.3 Section 6-123 of the Administrative Code: Pursuant to the requirements of Section 6-123 of the Administrative Code, every agreement between the **Contractor** and its **Subcontractors** in excess of $50,000 shall include a provision that the **Subcontractor** shall not engage in any unlawful discriminatory practice as defined in Title VIII of the Administrative Code (Section 8-101 et. seq.).

17.10 The **Commissioner** may deduct from the amounts certified under this **Contract** to be due to the **Contractor**, the sum or sums due and owing from the **Contractor** to the **Subcontractors** according to the terms of the said subcontracts, and in case of dispute between the **Contractor** and its **Subcontractor**, or **Subcontractors**, as to the amount due and owing, the **Commissioner** may deduct and withhold from the amounts certified under this **Contract** to be due to the **Contractor** such sum or sums as may be claimed by such **Subcontractor**, or **Subcontractors**, in a sworn affidavit, to be due and owing until such time as such claim or claims shall have been finally adjusted.

17.11 On **Contracts** where 100% performance bonds and payment bonds are executed, the **Contractor** shall include on each requisition for payment the following data: **Subcontractor's** name, value of the subcontract, total amount previously paid to **Subcontractor** for **Work** previously requisitioned, and the amount, including retainage, to be paid to the **Subcontractor** for **Work** included in the requisition.

17.12 On **Contracts** where performance bonds and payment bonds are not executed, the **Contractor** shall include with each requisition for payment submitted hereunder, a signed statement from each and every **Subcontractor** and/or **Materialman** for whom payment is requested in such requisition. Such signed statement shall be on the letterhead of the **Subcontractor** and/or **Materialman** for whom payment is requested and shall (i) verify that such **Subcontractor** and/or **Materialman** has been paid in full for all work performed and/or material supplied to date, exclusive of any amount retained and any amount included on the current requisition, and (ii) state the total amount of retainage to date, exclusive of any amount retained on the current requisition.

ARTICLE 18. ASSIGNMENTS

18.1 The **Contractor** shall not assign, transfer, convey or otherwise dispose of this **Contract**, or the right to execute it, or the right, title or interest in or to it or any part thereof, or assign, by power of attorney or otherwise any of the monies due or to become due under this **Contract**, unless the previous written consent of the **Commissioner** shall first be obtained thereto, and the giving of any such consent to a particular assignment shall not dispense with the necessity of such consent to any further or other assignments.

18.2 Such assignment, transfer, or conveyance shall not be valid until filed in the office of the **Commissioner** and the **Treasurer**, with the written consent of the **Commissioner** endorsed thereon or attached thereto.

18.3 Failure to obtain the previous written consent of the **Commissioner** to such an assignment, transfer or conveyance, may result in the revocation and annulment of this **Contract**. The **City** shall thereupon be relieved and discharged from any further liability to the **Contractor**, its assignees, transferees or sublessees, who shall forfeit and lose all monies therefor earned under the **Contract**, except so much as may be required to pay the **Contractor's** employees.

18.4 The provisions of this clause shall not hinder, prevent, or affect an assignment by the **Contractor** for the benefit of its creditors made pursuant to the **Laws** of the State of New York.

18.5 This **Contract** may be assigned by the **City** to any corporation, agency or instrumentality having authority to accept such assignment.

CHAPTER V
CONTRACTOR'S SECURITY AND GUARANTY

ARTICLE 19. SECURITY DEPOSIT

19.1 The bid deposit, if required, shall be retained by the **Comptroller** as security for the **Contractor's** faithful performance of the **Contract** and will be returned to the **Contractor** only after the sum retained under Article 21 equals the amount of the bid deposit, subject to the other provisions of this **Contract**. If performance and payment bonds are required, any bid security posted shall be returned within a reasonable time after posting of such bonds and execution of this **Contract** by the **City**. When no partial payments are provided, the bid deposit will be released when final payment is certified to the **Comptroller** for payment.

19.2 If the **Contractor** is declared in default under Article 48 prior to the return of the deposit, or if any claim is made such as referred to in Article 23, the amount of such deposit, or so much thereof as the **Comptroller** may deem necessary, may be retained and then applied by the **Comptroller**:

19.2.1 To compensate the **City** for any expense, loss or damage suffered or incurred by reason of or resulting from such default, including the cost of re-letting and liquidated damages; or

19.2.2 To indemnify the **City** against any and all claims.

ARTICLE 20. PAYMENT GUARANTEE

20.1 On **Contracts** where 100% performance bonds and payment bonds are executed, this article does not apply.

20.2 In the event the terms of this **Contract** do not require the **Contractor** to provide a payment bond, the **City** shall, in accordance with the terms of this article, guarantee payment of all lawful demands for:

20.2.1 Wages and compensation for labor performed and/or services rendered; and

20.2.2 Materials, equipment, and supplies provided, whether incorporated into the **Work** or not, when demands have been filed with the **City** as provided hereinafter by any person, firm, or corporation which furnished labor, material, equipment, supplies, or any combination thereof, in connection with the **Work** performed hereunder (hereinafter referred to as the "beneficiary") at the direction of the **City** or the **Contractor.**

20.3 The provisions of Article 20.2 are subject to the following limitations and conditions:

20.3.1 The guarantee is made for the benefit of all beneficiaries as defined in Article 20.2 provided that those beneficiaries strictly adhere to the terms and conditions of this Article 20.3.

20.3.2 Nothing in this article shall prevent a beneficiary providing labor, services or material for the **Work** from suing the **Contractor** for any amounts due and owing the beneficiary by the **Contractor.**

20.3.3 All demands made against the **City** pursuant to this article shall be made within four (4) months from the date payment is due on the invoice or invoices submitted by the beneficiary to the **Contractor** for labor or **Work** done or for materials or supplies delivered, or, if the demand is for wages, four (4) months from the date the wages were due to be paid to the beneficiary.

20.3.4 All demands made against the **City** by such beneficiary shall be presented to the **Engineer** along with all written documentation concerning the demand which the **Engineer** deems appropriate or necessary, which may include, but shall not be limited to: the subcontract; any invoices presented to the **Contractor** for payment; the notarized statement of the beneficiary that the demand is due and payable, that a request for payment has been made of the **Contractor** and that the demand has not been paid by the **Contractor** within the time allowed for such payment by the subcontract; and copies of any correspondence between the beneficiary and the **Contractor** concerning such demand. The **City** shall notify the **Contractor** that a demand has been made. The **Contractor** shall inform the **City** of any defenses to the demand, and shall forward to the **City** any documents the **City** requests concerning the demand.

20.3.5 The **City** shall make payment only if, after considering all defenses presented by the **Contractor**, it determines that the payment is due and owing to the beneficiary making the demand.

20.3.6 The **City** will not initiate the payment process of this article or make payment on a demand where the beneficiary making the demand has filed a lien against the **Work** or otherwise sues the **City** prior to receiving a written notice from the **City** that it will not pay the demand.

20.3.7 No beneficiary shall be entitled to interest from the **City**, or to any other costs, including, but not limited to, attorney's fees.

20.4 Upon the receipt by the **City** of a demand pursuant to this article, the **City** may withhold from any payment otherwise due and owing to the **Contractor** under this **Contract** an amount sufficient to satisfy the demand.

20.4.1 In the event the **City** determines that the demand is valid, the **City** shall notify the **Contractor** of such determination and the amount thereof, and direct the **Contractor** to immediately pay such amount to the beneficiary. In the event the **Contractor**, within seven (7) days of receipt of such notification from the **City**, fails to pay the beneficiary, such failure shall constitute an automatic

and irrevocable assignment of payment by the **Contractor** to the beneficiary for the amount of the demand determined by the **City** to be valid. The **Contractor**, without further notification or other process, hereby gives its unconditional consent to such assignment of payment to the beneficiary and authorizes the **City**, on its behalf, to take all necessary actions to implement such assignment of payment, including without limitation the execution of any instrument or documentation necessary to effectuate such assignment.

In the event that the amount otherwise due and owing to the **Contractor** by the **City** is insufficient to satisfy such demand, the **City** may, at its option, require payment from the **Contractor** of an amount sufficient to cover such demand and exercise any other right to require or recover payment which the **City** may have under **Law** or **Contract**.

20.4.2 In the event the **City** determines that the demand is invalid, any amount withheld pending the City's review of such demand shall be paid to the **Contractor**; provided, however, no lien has been filed. In the event a lien has been filed, the terms and conditions set forth in Article 23 shall apply.

20.5 The provisions of this article shall not prevent the **City** and the **Contractor** from resolving disputes in accordance with the **PPB** Rules, where applicable.

20.6 In the event the **City** determines that the beneficiary is entitled to payment pursuant to this article, such determination and any defenses and counterclaims raised by the **Contractor** shall be taken into account in evaluating the **Contractor's** performance.

20.7 Nothing in this article shall relieve the **Contractor** of the obligation to pay the claims of all persons with valid and lawful claims against the **Contractor** relating to the **Work**.

20.8 The **Contractor** shall not require any performance, payment or other bonds of any **Subcontractor** if this **Contract** does not require such bonds of the **Contractor**.

20.9 The payment guarantee made pursuant to this article shall be construed in a manner consistent with Section 137 of the State Finance Law and shall afford to persons furnishing labor or materials to the **Contractor** or his **Subcontractors** in the prosecution of the **Work** under this **Contract** all of the rights and remedies afforded to such persons by such section, including but not limited to, the right to commence an action against the **City** on the payment guarantee provided by this article within the one year limitations period set forth in Section 137(4)(b).

ARTICLE 21. RETAINED PERCENTAGE

21.1 If this **Contract** requires 100% performance and payment security, then as further security for the faithful performance of this **Contract**, the **Commissioner** shall deduct, and retain until the substantial completion of the **Work**, five (5%) percent of the value of **Work** certified for payment in each partial payment voucher.

21.2 If this **Contract** does not require 100% performance and payment security and if the price for which this **Contract** was awarded does not exceed $500,000, then as further security for the faithful performance of this **Contract**, the **Commissioner** shall deduct, and retain until the substantial completion of the **Work**, ten (10%) percent of the value of **Work** certified for payment in each partial payment voucher.

21.3 If this **Contract** does not require 100% performance and payment security and if the price for which this **Contract** was awarded exceeds $500,000, then as further security for the faithful performance of this **Contract,** the **Commissioner** shall deduct, and retain until the substantial completion of the **Work,** up to ten (10%) percent of the value of **Work** certified for payment in each partial payment voucher. The percentage to be retained is set forth in Schedule A of the General Conditions.

ARTICLE 22. INSURANCE

22.1 Types of Insurance: From the date the **Contractor** is required to provide Proof of Insurance pursuant to Article 22.3.1 through the date of completion of all required **Work** (including punch list work as certified in writing by the **Resident Engineer**), the **Contractor** shall effect and maintain the following types of insurance if and as indicated in Schedule A of the General Conditions (with the minimum limits and special conditions specified in Schedule A). Such insurance shall be issued by companies that meet the standards of Article 22.2.1 and shall be primary (and non-contributing) to any insurance or self-insurance maintained by the **City.**

22.1.1 Commercial General Liability Insurance: The **Contractor** shall provide a Commercial General Liability Insurance policy covering the **Contractor** as Named Insured and the **City** as an Additional Insured. This policy shall protect the **City** and the **Contractor** from claims for property damage and/or bodily injury, including death, which may arise from any of the operations under this **Contract**. Coverage under this policy shall be at least as broad as that provided by ISO Form CG 0001 (10/01 ed.), must be "occurrence" based rather than "claims-made", and shall include, without limitation, the following types of coverage: Premises Operations, Products and Completed Operations, Contractual Liability (including the tort liability of another assumed in a contract), Broad Form Property Damage, Medical Payments, Independent Contractors, Personal Injury (Contractual Exclusion deleted), Explosion, Collapse and Underground Property, and Incidental Malpractice. If such insurance contains an aggregate limit, it shall apply separately to this **Project**.

22.1.1(a) Such Commercial General Liability Insurance shall name the City, together with its officials and employees, as an Additional Insured under this policy. Coverage for the City as Additional Insured shall specifically include the City's officials and employees, and shall be at least as broad as either Insurance Services Office ("ISO") Form CG 20 10 (07/04 ed.) or Form CG 20 33 (07/04 ed.) and shall provide completed operations coverage at least as broad as CG 20 37 (07/04 ed.).

22.1.1(b) If this **Contract** is equal to or greater than Ten Million Dollars ($10,000,000.00), each Commercial General Liability Insurance policy provided shall contain each of the following endorsements:

22.1.1(b)(i) The Duties in the Event of Occurrence, Claim or Suit condition of the policy is amended per the following: If and insofar as knowledge of an "occurrence", "claim", or "suit" is relevant to the City of New York as Additional Insured under this policy, such knowledge by an agent, servant, official, or employee of the City of New York will not be considered knowledge on the part of the City of New York of the "occurrence", "claim", or "suit" unless the following position shall have received notice thereof from such agent, servant, official, or employee: Insurance Claims Specialist, Affirmative Litigation Division, New York City Law Department; and

22.1.1(b)(ii) Any notice, demand or other writing by or on behalf of the Named Insured to the Insurance Company shall also be deemed to be a notice, demand, or other writing on behalf of the City as Additional Insured. Any response by the Insurance Company to such notice, demand or other writing shall be addressed to Named Insured and to the City at the following addresses: Insurance Unit, NYC Comptroller's Office, 1 Centre Street – Room 1222, New York, N.Y. 10007; and Insurance Claims Specialist, Affirmative Litigation Division, New York City Law Department, 100 Church Street, New York, NY 10007.

22.1.2 Workers' Compensation Insurance and Disability Benefits Insurance: The **Contractor** shall provide, and ensure that each **Subcontractor** provides, Workers Compensation Insurance and Disability Benefits Insurance in accordance with the **Laws** of the State of New York on behalf of all employees providing services under this **Contract** (except for those qualifying for insurance pursuant to Article 22.1.4).

22.1.3 Employers' Liability Insurance: The **Contractor** shall provide, and ensure that each **Subcontractor** provides, Employers Liability Insurance affording compensation due to bodily injury by accident or disease sustained by any employee arising out of and in the course of his/her employment under this Contract (except for those qualifying for insurance pursuant to Article 22.1.4).

22.1.4 United States Longshoremen's and Harbor Workers Act and/or Jones Act Insurance: The **Contractor** shall provide, and ensure that each **Subcontractor** provides, insurance in accordance with the United States Longshoremen's and Harbor Workers Act and/or the Jones Act, on behalf of all qualifying employees providing services under this **Contract**.

22.1.5 Builders' Risk Insurance: The **Contractor** shall provide a Builders' Risk Insurance policy covering all risks in completed value form. Such policy shall cover the total value of the **Work** performed in accordance with Schedule A, as well as the value of any equipment, supplies and/or material for the **Project** that may be in storage (on or off the **Site**) or in transit. The policy shall cover the cost of removing debris, including demolition as may be legally necessary by the operation of any law, ordinance or regulation, and for loss or damage to any owned, borrowed, leased or rented capital equipment, tools, including tools of their agents and employees, staging towers and forms, and property of the **City** held in their care, custody and/or control. Such policy shall name as insureds the **City**, the **Contractor,** and its **Subcontractors**. The Builders' Risk policy shall contain the following endorsements:

22.1.5(a) The **City** and the **Contractor** shall be named as loss payee for the **Work** in order of precedence, as their interest may appear; and

22.1.5(b) In the event the loss occurs at an occupied facility, the policy shall permit occupancy without the consent of the Insurance Company; and

22.1.5(c) In the event that the insurance policy has been issued by a mutual insurance company, the following language shall be included: "The City of New York is not liable for any premium or assessment under this policy of insurance. The First Named Insured is solely liable therefor."

22.1.6 Comprehensive Business Automobile Liability Insurance: The **Contractor** shall provide a Comprehensive Business Automobile Liability policy for liability arising out of any owned, non-owned, leased and hired vehicles to be used in connection with this **Contract**. Coverage should be at least as broad as ISO Form CA0001, ed. 10/01.

22.1.6(a) If autos are used for transporting hazardous materials, the Automobile Liability Insurance shall be endorsed to provide pollution liability broadened coverage for covered vehicles (endorsement CA 99 48) as well as proof of MCS 90.

22.1.7 Pollution/Environmental Liability Insurance: The **Contractor** shall provide Pollution/Environmental Liability Insurance covering bodily injury and property damage, including loss of use of damaged property or of property that has not been physically injured. Such insurance shall provide coverage for actual, alleged or threatened emission, discharge, dispersal, seepage, release or escape of pollutants (including asbestos), including any loss, cost or expense incurred as a

result of any cleanup of pollutants (including asbestos) or in the investigation, settlement or defense of any claim, suit, or proceedings against the **City** arising from the operations under this **Contract**. Such insurance shall be in the **Contractor's** name and list the **City** as an Additional Insured. Coverage for the **City** as Additional Insured shall specifically include the **City's** officials and employees, and shall be at least as broad as provided to the **Contractor** for this **Project**.

22.1.7(a) If such coverage is written on a claims-made policy, such policy shall have a retroactive date on or before the effective date of this **Contract,** and continuous coverage shall be maintained, or an extended discovery period exercised, for a period of not less than three years from the time the **Work** under this **Contract** is completed.

22.1.8 Marine Insurance:

22.1.8(a) Marine Protection and Indemnity Insurance: The **Contractor** shall provide a Marine Protection and Indemnity policy with coverage at least as broad as policy form SP-23. The policy shall provide coverage for the **Contractor** and for the **City** (together with its officials and employees) as Additional Insured for bodily injury and property damage arising from marine operations under this **Contract** including injury or death of crew members (if not fully provided through other insurance), damage to piers, wharves and other fixed or movable structures and loss of or damage to any other vessel or craft, or to property on such other vessel or craft, not caused by collision.

22.1.8(b) Ship Repairers Legal Liability Insurance: The **Contractor** shall provide a Ship Repairers Legal Liability Insurance policy covering all repair operations under this **Contract** at or in the vicinity of a designated approved port or yard under this **Contract**. The policy shall provide coverage from the point of acceptance of care custody and control of any **City** vessel. The policy shall provide Bailee Coverage for any **City** vessel in the **Contractor's** care, custody and control and coverage for damage to property of others caused by any **City** vessel in the **Contractor's** care custody and control.

22.1.8(c) Collision Liability/Towers Liability Insurance: The **Contractor** shall provide a Collision Liability/Towers Liability Insurance policy with coverage for the **Contractor** and for the **City** (together with its officials and employees) as Additional Insured at least as broad as the American Institute Tug Form (08/01/76) for all tugs used under this **Contract** and Collision Liability per American Institute Hull Clauses (6/2/77).

22.1.8(d) Marine Pollution Liability Insurance: The **Contractor** shall provide a Marine Pollution Liability Insurance policy covering itself as Named Insured and the **City** (together with its officials and employees) as Additional Insured for liability arising from the discharge or substantial threat of a discharge of oil, or from the release or threatened release of a hazardous substance including injury to, or economic losses resulting from, the destruction of or damage to real property, personal property or natural resources. Coverage under this policy shall be at least as broad as that provided by Water Quality Insurance Syndicate Form (09/98 ed.).

22.1.9 The **Contractor** shall provide such other types of insurance, at such minimum limits, as are specified in Schedule A of the General Conditions.

22.2 General Requirements for Insurance Policies:

22.2.1 All required insurance policies shall be maintained with companies that may lawfully issue the required policy and have an A.M. Best rating of at least A- VII or a Standard and Poor's rating of at least AA, unless prior written approval is obtained from the Mayor's Office of Operations.

22.2.2 The **Contractor** shall be solely responsible for the payment of all premiums for all required policies and all deductibles and self-insured retentions to which such policies are subject, whether or not the **City** is an insured under the policy.

22.2.3 In his/her sole discretion, the **Commissioner** may, subject to the approval of the **Comptroller** and the Corporation Counsel, accept Letters of Credit and/or custodial accounts in lieu of required insurance.

22.2.4 The **City's** limits of coverage for all types of insurance required pursuant to Schedule A of the General Conditions shall be the greater of (i) the minimum limits set forth in Schedule A or (ii) the limits provided to the **Contractor** as Named Insured under all primary, excess and umbrella policies of that type of coverage.

22.2.5 All required insurance policies, except for insurance required pursuant to Sections 22.1.2, 22.1.3, and 22.1.4, shall contain the following endorsement: "This policy may not be cancelled, terminated, modified or changed unless thirty (30) days prior written notice is sent by the Insurance Company to the Named Insured (or First Named Insured, as appropriate), the **Commissioner**, and to the **Comptroller**, attn: Office of Contract Administration, Municipal Building, Room 1005, New York, New York 10007."

22.3 Proof of Insurance:

22.3.1 Within ten (10) **Days** of award, the **Contractor** shall, for each policy required under this **Contract,** except for Workers Compensation Insurance and Disability Benefits Insurance and builders' risk insurance, file a Certificate of Insurance with the **Commissioner** pursuant to Article 22.6. For Workers' Compensation Insurance and Disability Benefits Insurance, the **Contractor** shall file proof of insurance in a form acceptable to the **Commissioner** within ten (10) **Days** of award. Accord forms are not acceptable proof of workers' compensation coverage. The Contractor must submit one of the following forms to the Department, or another form acceptable to the Department: C-105.2 -- Certificate of Workers' Compensation Insurance, or U-26.3 -- State Insurance Fund Certificate of Workers' Compensation Insurance. For builders' risk insurance, the **Contractor** shall file a Certificate of Insurance with the **Commissioner** at the direction of the **Commissioner** but in any event no later than ten (10) **Days** prior to commencement of the **Work**.

22.3.1(a) All Certificates of Insurance shall be in a form acceptable to the **City** and shall certify the issuance and effectiveness of the types of insurance specified in Schedule A, each with the specified minimum limits and evidence of the compliance with the Additional Insured or Named Insured provisions of Articles 22.1.1(a), 22.1.5, 22.1.7, and 22.1.8, as applicable. All Certificate(s) of Insurance shall be accompanied by either a duly executed "Certification by Broker" in the form contained in Part II of Schedule A or completed copies of all policies referenced in the Certificate of Insurance. In the absence of completed policies, binders are acceptable.

22.3.2 Certificates of Insurance confirming renewals of insurance shall be submitted to the **Commissioner** prior to the expiration date of coverage of policies required under this **Contract**. Such Certificates of Insurance shall comply with the requirements of Article 22.3.1(a) and, if applicable, Article 22.3.1(b).

22.3.3 The **Contractor** shall be obligated to provide the **City** with a copy of any policy required by this Article 22 upon the demand for such policy by the **Commissioner** or the New York City Law Department.

22.4 Operations of the Contractor:

22.4.1 The **Contractor** shall not commence the **Work** unless and until all required certificates have been submitted to and accepted by the **Commissioner**. Acceptance by the **Commissioner** of a certificate hereunder does not excuse the **Contractor** from securing a policy consistent with all provisions of this Article or of any liability arising from its failure to do so.

22.4.2 The **Contractor** shall be responsible for providing continuous insurance coverage in the manner, form, and limits required by this **Contract** and shall be authorized to perform **Work** only during the effective period of all required coverage.

22.4.3 In the event that any of the required insurance policies lapse, are revoked, suspended or otherwise terminated, for whatever cause, the **Contractor** shall immediately stop all **Work**, and shall not recommence **Work** until authorized in writing to do so by the **Commissioner**. Upon quitting the **Site**, except as otherwise directed by the Commissioner, the **Contractor** shall leave all plant, materials, equipment, tools and supplies on the **Site**. **Contract** time shall continue to run during such periods and no extensions of time will be granted. The **Commissioner** may also declare the **Contractor** in default for failure to maintain required insurance.

22.5 The **City** as Additional Insured or Loss Payee under **Subcontractors'** Insurance. The Contractor shall ensure that each **Subcontractor** name the **City** as Additional Insured or loss payee, as appropriate, under all policies covering **Work** performed by such **Subcontractor** under this **Contract**. The **City**'s coverage as Additional Insured shall include the **City's** officials and employees and be at least as broad as that provided to the **Contractor**. The foregoing requirements shall not apply to insurance provided pursuant to Articles 22.1.2, 22.1.3, and 22.1.4.

22.6 Wherever reference is made in Article 7 or this Article 22 to documents to be sent to the **Commissioner** (e.g., notices, filings, or submissions), such documents shall be sent to the address set forth in Schedule A of the General Conditions. In the event no address is set forth in Schedule A, such documents are to be sent to the **Commissioner's** address as provided elsewhere in this **Contract**.

22.7 If the **Contract** involves disposal of hazardous materials, the **Contractor** shall dispose such materials only at sites where the disposal site operator maintains Pollution Legal Liability Insurance in the amount of at least $2,000,000 for losses arising from such disposal site.

22.8 Materiality/Non-Waiver: The **Contractor's** failure to secure policy(ies) in complete conformity with this Article, or to give the Insurance Company timely notice of any sort required in this **Contract** on behalf of the **City**, or to do anything else required by this Article shall constitute a material breach of this **Contract**. Such breach shall not be waived or otherwise excused by any action or inaction by the **City** at any time.

22.9 Other Remedies: Insurance coverage in the minimum amounts provided for herein shall not relieve the **Contractor** or **Subcontractors** of any liability under this **Contract**, nor shall it preclude the **City** from exercising any rights or taking such other actions as are available to it under any other provisions of this **Contract** or **Law**.

ARTICLE 23. MONEY RETAINED AGAINST CLAIMS

23.1 If any claim shall be made by any person or entity (including **Other Contractors** with the **City** on this **Project**) against the **City** or against the **Contractor** and the **City** for any of the following:

(a) An alleged loss, damage, injury, theft or vandalism of any of the kinds referred to in Articles 7 and 12, plus the reasonable costs of defending the City, which in the opinion of the **Comptroller** may not be paid by an insurance company (for any reason whatsoever); or

(b) An infringement of copyrights, patents or use of patented articles, tools, etc., as referred to in Article 57; or

(c) Damage claimed to have been caused directly or indirectly by the failure of the **Contractor** to perform the **Work** in strict accordance with this **Contract,**

the amount of such claim, or so much thereof as the **Comptroller** may deem necessary, may be withheld by the **Comptroller**, as security against such claim, from any money due hereunder. The **Comptroller**, in his/her discretion, may permit the **Contractor** to substitute other satisfactory security in lieu of the monies so withheld.

23.2 If an action on such claim is timely commenced and the liability of the **City**, or the **Contractor**, or both, shall have been established therein by a final judgment of a Court of competent jurisdiction, or if such claim shall have been admitted by the **Contractor** to be valid, the **Comptroller** shall pay such judgment or admitted claim out of the monies retained by the **Comptroller** under the provisions of this article, and return the balance, if any, without interest, to the **Contractor**.

23.3 Liens: If at any time before or within thirty (30) **Days** after the **Work** is completed and accepted by the **City**, any persons claiming to have performed any labor or furnished any material toward the performance or completion of this **Contract**, shall file with the **Agency** and with the **Treasurer** any notice as is described in the New York State Lien **Law**, or any act of the Legislature of the State of New York, the **City** shall retain, from the monies due or to become due under this **Contract**, so much of such monies as shall be sufficient to pay the amount claimed in said notice, together with the reasonable costs of any action or actions brought or that may be brought to enforce such lien. The monies so retained shall be held by the **City** until the lien thereon created by the said act and the filing of the said notice shall be discharged pursuant to **Law**.

ARTICLE 24. MAINTENANCE AND GUARANTY

24.1 The **Contractor** shall promptly repair, replace, restore or rebuild, as the **Commissioner** may determine, any finished **Work** in which defects of materials or workmanship may appear or to which damage may occur because of such defects, during the one (1) year period subsequent to the date of **Substantial Completion** (or use and occupancy in accordance with Article 16), except where other periods of maintenance and guarantee are provided for.

24.2 As security for the faithful performance of its obligations hereunder, the **Contractor**, upon filing its requisition for payment on **Substantial Completion**, shall deposit with the **Commissioner** a sum equal to one (1%) percent of the price (or the amount fixed in Schedule A of the General Conditions) in cash or certified check upon a state or national bank and trust company or a check of such bank and trust company signed by a duly authorized officer thereof and drawn to the order of the **Comptroller**, or obligations of the **City**, which the **Comptroller** may approve as of equal value with the sum so required.

24.3 In lieu of the above, the **Contractor** may make such security payment to the **City** by authorizing the **Commissioner** in writing to deduct the amount from the **Substantial Completion** payment which shall be deemed the deposit required above.

CERTIFICATE OF LIABILITY INSURANCE

DATE (MM/DD/YYYY): 9/5/2013

PRODUCER (973)890-0900 FAX: (973)812-9860
C&H AGENCY
783 Riverview Drive
. Box 324
Totowa NJ 07511

THIS CERTIFICATE IS ISSUED AS A MATTER OF INFORMATION ONLY AND CONFERS NO RIGHTS UPON THE CERTIFICATE HOLDER. THIS CERTIFICATE DOES NOT AMEND, EXTEND OR ALTER THE COVERAGE AFFORDED BY THE POLICIES BELOW.

INSURED
Cruz Contractors LLC
952 Holmdel Road
Holmdel, NJ 07733

INSURERS AFFORDING COVERAGE	NAIC #
INSURER A: Starr Indemnity & Liability	38318
INSURER B: Hartford Fire Ins. Co.	19682
INSURER C: RSUI Indemnity	32314
INSURER D: The Hanover Ins. Group	
INSURER E:	

COVERAGES

THE POLICIES OF INSURANCE LISTED BELOW HAVE BEEN ISSUED TO THE INSURED NAMED ABOVE FOR THE POLICY PERIOD INDICATED. NOTWITHSTANDING ANY REQUIREMENT, TERM OR CONDITION OF ANY CONTRACT OR OTHER DOCUMENT WITH RESPECT TO WHICH THIS CERTIFICATE MAY BE ISSUED OR MAY PERTAIN, THE INSURANCE AFFORDED BY THE POLICIES DESCRIBED HEREIN IS SUBJECT TO ALL THE TERMS, EXCLUSIONS AND CONDITIONS OF SUCH POLICIES. AGGREGATE LIMITS SHOWN MAY HAVE BEEN REDUCED BY PAID CLAIMS.

INSR LTR	ADD'L INSRD	TYPE OF INSURANCE	POLICY NUMBER	POLICY EFFECTIVE DATE (MM/DD/YYYY)	POLICY EXPIRATION DATE (MM/DD/YYYY)	LIMITS	
A		GENERAL LIABILITY X COMMERCIAL GENERAL LIABILITY CLAIMS MADE X OCCUR X Includes XCU X Contractual Liab. GEN'L AGGREGATE LIMIT APPLIES PER: POLICY X PRO-JECT LOC	1000025184	4/1/2013	4/1/2014	EACH OCCURRENCE DAMAGE TO RENTED PREMISES (Ea occurrence) MED EXP (Any one person) PERSONAL & ADV INJURY GENERAL AGGREGATE PRODUCTS - COMP/OP AGG	$ 2,000,000 $ 300,000 $ 10,000 $ 1,000,000 $ 4,000,000 $ 4,000,000
B		AUTOMOBILE LIABILITY X ANY AUTO ALL OWNED AUTOS SCHEDULED AUTOS X HIRED AUTOS X NON-OWNED AUTOS	10UENQT6293	4/1/2013	4/1/2014	COMBINED SINGLE LIMIT (Ea accident) BODILY INJURY (Per person) BODILY INJURY (Per accident) PROPERTY DAMAGE (Per accident)	$ 1,000,000 $ $ $
		GARAGE LIABILITY ANY AUTO				AUTO ONLY - EA ACCIDENT OTHER THAN AUTO ONLY: EA ACC AGG	$ $ $
A		EXCESS / UMBRELLA LIABILITY X OCCUR CLAIMS MADE	SISCCCL0023813	4/1/2013	4/1/2014	EACH OCCURRENCE AGGREGATE	$ 10,000,000 $ 10,000,000
C		DEDUCTIBLE RETENTION $	NHA063190	4/1/2013	4/1/2014		$ $ 5,000,000 $ 5,000,000
A		WORKERS COMPENSATION AND EMPLOYERS' LIABILITY ANY PROPRIETOR/PARTNER/EXECUTIVE OFFICER/MEMBER EXCLUDED? Y/N (Mandatory in NH) If yes, describe under SPECIAL PROVISIONS below	100 0001159	4/1/2013	4/1/2014	X WC STATU-TORY LIMITS OTH-ER E.L. EACH ACCIDENT E.L. DISEASE - EA EMPLOYEE E.L. DISEASE - POLICY LIMIT	$ 1,000,000 $ 1,000,000 $ 1,000,000
D		OTHER Property/Equipment Package	RHY8113584-00	4/1/2013	4/1/2014	Engineer's Field Office	$40,000

DESCRIPTION OF OPERATIONS / LOCATIONS / VEHICLES / EXCLUSIONS ADDED BY ENDORSEMENT / SPECIAL PROVISIONS

RE: FMS ID: QED-1008 E-PIN:85013B008001 DDC PIN:8502012WM0006C. INSTALLATION OF 60-INCH AND 12-INCH WATER MAINS IN: 54TH STREET BETWEEN FLUSHING AVE AND GRAND AVE - QUEENS.

SEE ATTACHED FOR ADDITIONAL INSUREDS

CERTIFICATE HOLDER

New York City Department of Design & Construction
30-30 Thomson Avenue
Long Island City, NY 11101

CANCELLATION

SHOULD ANY OF THE ABOVE DESCRIBED POLICIES BE CANCELLED BEFORE THE EXPIRATION DATE THEREOF, THE ISSUING INSURER WILL ENDEAVOR TO MAIL 30 DAYS WRITTEN NOTICE TO THE CERTIFICATE HOLDER NAMED TO THE LEFT, BUT FAILURE TO DO SO SHALL IMPOSE NO OBLIGATION OR LIABILITY OF ANY KIND UPON THE INSURER, ITS AGENTS OR REPRESENTATIVES.

AUTHORIZED REPRESENTATIVE

Daniel Culnen/EDNA

COMMENTS/REMARKS

City of New York, including its officials and employees; The Long Island Railroad (LIRR), its subsidiaries and affiliated companies; and National Grid are included as Additional Insureds with respect to this project but only if required by written and signed contract.

SCHEDULE "A"

(RELATING TO ARTICLE 22 – INSURANCE)

PART II. BROKER'S CERTIFICATION

[Pursuant to Article 22.3.1(a) of the **Contract**, every Certificate of Insurance must be accompanied by either the following certification by the broker setting forth the following text and required information and signatures or complete copies of all policies referenced in the Certificate of Insurance. In the absence of completed policies, binders are acceptable.]

CERTIFICATION BY BROKER

The undersigned insurance broker represents to the City of New York that the attached Certificate of Insurance is accurate in all material respects, and that the described insurance is effective as of the date of this Certification.

C & H Agency
[Name of broker (typewritten)]

783 No. Riverview Drive, Totowa, NJ 07512
[Address of broker (typewritten)]

Caren Malthaner
[Signature of authorized official or broker]

Caren Malthaner
[Name and title of authorized official (typewritten)]

Sworn to before me this
5 day of Sept, ~~200~~ 2013

Laura M Renne
NOTARY PUBLIC

LAURA M. RENNE
NOTARY PUBLIC OF NEW JERSEY
Commission Expires 2/5/2014

Project ID.:QED1008

☐ CAPITAL CONTRACT
☐ OPERATING CONTRACT
☐ "NOT FOR BENEFIT", Including ENTRY PERMITS/FILM

Long Island Rail Road
CERTIFICATE OF INSURANCE

AGREEMENT or CONTRACT NO.: QED-1008

AGREEMENT or CONTRACT Name/Description: Installation of 60" & 12" water main. 54th St. between Flushing & Grand Ave, Queens

PRODUCER: C&H Agency, Inc.
ADDRESS: PO Box 324, Totowa, NJ 07511
PHONE NUMBER: 973-435-3314

CERTIFICATE ISSUANCE DATE: 9/6/13

RECEIVED BY MTA RIM:

MTA REFERENCE NO.:

INSURED: Cruz Contractors, LLC
ADDRESS: 952 Holmdel Avenue, Holmdel, NJ 07733
PHONE NUMBER:

CERTIFICATE HOLDER: Long Island Rail Road/MTA Attn: Risk & Insurance Management
ADDRESS: 2 Broadway, 21st Floor, New York, NY 10004

CO LTR	COMPANIES AFFORDING COVERAGE
A	Starr Indemnity & Liability
B	Hartford Fire Ins. Co.
C	Lloyds of London
D	Steadfast Insurance Co.
E	
F	
G	

CO LTR	TYPE OF INSURANCE	POLICY NUMBER	EFFECTIVE DATE	EXPIRATION DATE	LIMITS	
A	GENERAL LIABILITY ☒ Comprehensive Form ☒ Underground Expl. & Collapse Hazard ☒ Products/Completed Operation ☒ Contractual ☒ Independent Contractors ☒ Broad Form Property Damage ☒ Personal Injury ☒ Deductible $ 10,000	1000025184	4/1/13	4/1/14	BODILY INJURY OCCURENCE	$
					BODILY INJURY AGGREGATE	$
					PROPERTY DAMAGE OCC.	$
					B.I. & P.D. COMBINED OCC.	$ 2,000,000
					B.I. & P.D. COMBINED AGG.	$ 4,000,000
					PERSONAL INJURY AGG.	$ 1,000,000
B	AUTOMOBILE LIABILITY ☒ Any Auto ☒ Owned Autos ☒ Hired Autos ☒ Non-Owned Autos	IOUENQT6293	4/1/13	4/1/14	BODILY INJURY (Per Person)	$
					BODILY INJURY (Per Accident)	$
					PROPERTY DAMAGE	$
					BODILY INJURY & PROPERTY DAMAGE COMBINED	$ 1,000,000
	GARAGE LIABILITY ☐ ANY AUTO				AUTO ONLY - EACH ACCIDENT	$
					OTHER THAN EACH ACC.	$
					AUTO ONLY: AGGREGATE	$
A	EXCESS LIABILITY ☒ Umbrella Form ☐ Other Than Umbrella Form	SISCCCL023813	4/1/13	4/1/14	EACH OCCURRENCE	$ 10,000,000
					AGGREGATE	$ 10,000,000
A	WORKER'S COMPENSATION AND EMPLOYER'S LIABILITY (Check if applicable) ☒ "All States" Coverage	100000159	4/1/13	4/1/14	☒ STATUTORY LIMITS	
					EMPLOYER'S LIABILITY	$ 1,000,000
	BUILDER'S RISK				FULL CONTRACT VALUE OF	$
C	PROFESSIONAL LIABILITY ☐ Deductible $ 0 ☐ Includes Pollution Liability	HTC11-0122	6/22/13	6/22/14		$ 2,000,000
D	OTHER RR Protective	500647 6566	9/6/13	9/6/14	Occurance	$ 2,000,000
	OTHER				Aggregate	$ 6,000,000

RAILROAD PROTECTIVE LIABILITY Insurance is NOT ACCEPTED on Certificate of Insurance forms - Provide detailed BINDER and/or POLICY.

Project ID.:QED1008

CERTIFICATE OF INSURANCE (Continued) Page 2

ADDITIONAL INSUREDS (See Note 3) (√ all that apply):
Coverage: Commercial Liability, Garage Liability, Excess/Umbrella Liability, Contractor's Pollution Liability Pollution Legal Liability, etc.

For LIRR Agreements:

- ☐ Long Island Rail Road (LIRR), Metropolitan Transportation Authority (MTA) and it's subsidiaries and affiliates
- ☐ New York & Atlantic Railway Company
- ☐ National Railroad Passenger Corp. (Amtrak)
- ☐ NJ Transit Rail Operations, Inc.
- ☐ The Port Authority of NY and NJ
- ☐ Other

☐ LOSS PAYEES (See Note 3) (√ all that apply):
Coverage: Crime Insurance, Valuable Papers Builder's Risk, etc.

☐ NAMED INSUREDS (See Note 4) (√ all that apply):
Coverage: Property, etc.

For LIRR Agreements:

- ☐ Long Island Rail Road (LIRR), Metropolitan Transportation Authority (MTA) and it's subsidiaries and affiliates
- ☐ New York & Atlantic Railway Company
- ☐ National Railroad Passenger Corp. (Amtrak)
- ☐ NJ Transit Rail Operations, Inc.
- ☐ The Port Authority of NY and NJ
- ☐ Other

NOTE 1: The subscribing insurance company(s), authorized to do business in the State of New York, certifies that insurance of the kinds and types and for Limits of Liability herein stated, covering the Agreement/Contract herein designated, has been procured by and furnished on behalf of the insured and is in full force and effect for the period listed on the front of this Certificate of Insurance. In addition, the subscribing insurance company(s) certifies that the insurance limits for General Liability insurance are not amended by deductible clauses of any nature except as has been disclosed to and approved by the Long Island Rail Road; and that coverage is afforded for the insured's obligations under that provision of the Agreement/Contract providing for indemnification of the Indemnified Parties, including the Long Island Rail Road, named therein. Further, any Umbrella/Excess Policy used to meet minimum contract requirements follows form of the underlying policy and will "drop down" to become primary in the event the Contractor's underlying policy is exhausted. Any exclusion applying to construction or demolition operations on or within fifty (50) feet of railroad property (stations, yards, tracks, etc.) has been voided. Any employer liability exclusion, which may otherwise operate to exclude claims for bodily injury asserted by an employee of an additional insured, shall be voided.

NOTE 2: The subscribing company(s), shall endeavor to provide thirty (30) days written notice of any material changes or cancellation to Long Island Rail Road c/o MTA Risk and Insurance Management Dept., 2 Broadway, 21st Floor, New York, NY 10004.

NOTE 3: All references to Additional Insureds, Named Insureds and Loss Payees include those entities' directors, officers, employees, partners, agents, subsidiaries and affiliates.

NOTE 4: This certificate is issued to the Certificate Holder in consideration of the Agreement/Contract entered into with the named insured. It is understood and agreed that the Certificate Holder relies on the certificate as a basis for continuing such Agreement/Contracts with the named insured.

AUTHORIZED INSURER/PRODUCER C&H Agency, Inc./Caren Malthaner

BY Caren Malthaner
(signature of authorized insurer/Producer)

TITLE Commercial Account Executive

STATE OF NJ)
COUNTY OF PASSAIC) s.s.
)

On this 16 day of Sept 2013, before me personally came Caren Malthaner, to me known, who being duly sworn, did depose and say that he/she resides in New Jersey, that he/she is the Comm. Acct. Exec. of the corporation and described in and which executed the foregoing Certificate of Insurance, that he/she is fully authorized to execute the foregoing Certificate of Insurance.

Laura M Renne
(Notary Public)

CERTIFICATES OF INSURANCE must be completed by AUTHORIZED INSURANCE REPRESENTATIVES ONLY.

LAURA M. RENNE
NOTARY PUBLIC OF NEW JERSEY
Commission Expires 2/5/2014

24.4 If the **Contractor** has faithfully performed all of its obligations hereunder the **Commissioner** shall so certify to the **Comptroller** within five (5) **Days** after the expiration of one (1) year from the date of **Substantial Completion** and acceptance of the **Work** or within thirty (30) **Days** after the expiration of the guarantee period fixed in the **Specifications**. The security payment shall be repaid to the **Contractor** without interest within thirty (30) **Days** after certification by the **Commissioner** to the **Comptroller** that the **Contractor** has faithfully performed all of its obligations hereunder.

24.5 Notice by the **Commissioner** to the **Contractor** to repair, replace, rebuild or restore such defective or damaged **Work** shall be timely, pursuant to this article, if given not later than ten (10) **Days** subsequent to the expiration of the one (1) year period or other periods provided for herein.

24.6 If the **Contractor** shall fail to repair, replace, rebuild or restore such defective or damaged **Work** promptly after receiving such notice, the **Commissioner** shall have the right to have the **Work** done by others in the same manner as provided for in the completion of a defaulted **Contract**, under Article 51.

24.7 If the security payment so deposited is insufficient to cover the cost of such **Work**, the **Contractor** shall be liable to pay such deficiency on demand by the **Commissioner**.

24.8 The **Engineer's** certificate setting forth the fair and reasonable cost of repairing, replacing, rebuilding or restoring any damaged or defective **Work** when performed by one other than the **Contractor**, shall be binding and conclusive upon the **Contractor** as to the amount thereof.

24.9 The **Contractor** shall obtain all manufacturers' warranties and guaranties of all equipment and materials required by this **Contract** in the name of the **City** and shall deliver same to the **Commissioner**. All of the **City's** rights and title and interest in and to said manufacturers' warranties and guaranties may be assigned by the **City** to any subsequent purchasers or lessees of the premises.

CHAPTER VI
CHANGES, EXTRA WORK AND DOCUMENTATION OF CLAIM

ARTICLE 25. CHANGES

25.1 Changes may be made to this **Contract** only as duly authorized in writing by the **Commissioner** in accordance with the **Laws** and this **Contract**. All such changes, modifications and amendments will become a part of the **Contract**. **Work** so ordered shall be performed by the **Contractor**.

25.2 **Contract** changes will be made only for **Work** necessary to complete the **Work** included in the original scope of the **Contract** and/or for non-material changes to the scope of the **Contract**. Changes are not permitted for any material alteration in the scope of **Work** in the **Contract**.

25.3 The **Contractor** shall be entitled to a price adjustment for **Extra Work** performed pursuant to a written change order. Adjustments to price shall be computed in one or more of the following ways:

25.3.1 By applicable unit prices specified in the **Contract**; and/or

25.3.2 By agreement of a fixed price; and/or

25.3.3 By time and material records; and/or

25.3.4 In any other manner approved by the **CCPO**.

25.4 All payments for change orders are subject to pre-audit by the **Engineering Audit Officer** and may be post-audited by the **Comptroller** and/or the **Department**.

ARTICLE 26. METHODS OF PAYMENT FOR OVERRUNS AND EXTRA WORK

26.1 Overrun of Unit Price Item: An overrun is any quantity of a unit price item which the **Contractor** is directed to provide which is in excess of one hundred twenty-five (125%) percent of the estimated quantity for that item set forth in the bid schedule.

26.1.1 For any unit price item, the **Contractor** will be paid at the unit price bid for any quantity up to one hundred twenty five (125%) percent of the estimated quantity for that item set forth in the bid schedule. If during the progress of the **Work,** the actual quantity of any unit price item required to complete the **Work** approaches the estimated quantity for that item, and for any reason it appears that the actual quantity of any unit price item necessary to complete the **Work** will exceed the estimated quantity for that item by twenty-five (25%) percent, the **Contractor** shall immediately notify the **Engineer** of such anticipated overrun. The **Contractor** shall not be compensated for any quantity of a unit price item provided which is in excess of one hundred twenty five (125%) percent of the estimated quantity for that item set forth in the bid schedule without written authorization from the Engineer.

26.1.2 If the actual quantity of any unit price item necessary to complete the Work will exceed one hundred twenty five (125%) percent of the estimated quantity for that item set forth in the bid schedule, the **City** reserves the right and the **Contractor** agrees to negotiate a new unit price for such item. In no event shall such negotiated new unit price exceed the unit bid price. If the **City** and **Contractor** cannot agree on a new unit price, then the **City** shall order the **Contractor** and the **Contractor** agrees to provide additional quantities of the item on a time and material basis for the actual and reasonable cost as determined under Article 26.2, but in no event at a unit price exceeding the unit price bid.

26.2 **Extra Work:** For **Extra Work** where payment is by agreement on a fixed price in accordance with Article 25.3.2, the price to be paid for such **Extra Work** shall be based on the fair and reasonable estimated cost of the items set forth below. For **Extra Work** where payment is on a time and material basis in accordance with Article 25.3.3, the price to be paid for such **Extra Work** shall be the actual and reasonable cost of the items set forth below.

26.2.1 Necessary materials (including transportation to the **Site**); plus

26.2.2 Necessary direct labor, including payroll taxes and supplemental benefits; plus

26.2.3 Sales and personal property taxes, if any, required to be paid on materials not incorporated into such **Extra Work**; plus

26.2.4 Reasonable rental value of **Contractor**-owned, necessary plant and equipment other than small tools, plus fuel/energy costs. Except for fuel costs for pick-up trucks which shall be reimbursed based on a consumption of five (5) gallons per shift, fuel costs shall be reimbursed based on actual costs or, in the absence of auditable documentation, the following fuel consumption formula per operating hour: (.035) x (HP rating) x (Fuel cost/gallon). Reasonable rental value is defined as the lower of either seventy-five percent of the monthly prorated rental rates established in "The AED Green Book, Rental Rates and Specifications for Construction Equipment" published by PRIMEDIA (the "Green Book"), or seventy-five percent of the monthly prorated rental rates established in the "Rental Rate Blue Book for Construction Equipment" published by PRIMEDIA (the "Blue Book"). The reasonable rental value is inclusive of all operating costs except for fuel/energy consumption and equipment operator's wages/costs. For multiple shift utilization, reimbursement shall be calculated as follows: first shift shall be seventy-five percent of such rental rates; second shift shall be sixty percent of the first shift rate; and third shift shall be forty

percent of the first shift rate. Equipment on standby shall be reimbursed at one-third the prorated monthly rental rate. **Contractor**-owned equipment includes equipment from rental companies affiliated with or controlled by the **Contractor,** as determined by the **Commissioner**. In establishing cost reimbursement for non-operating contractor-owned equipment (scaffolding, sheeting systems, road plates, etc.), the City may restrict reimbursement to a purchase-salvage/life cycle basis if less than the computed rental costs; plus

26.2.5 Necessary installation and dismantling of such plant and equipment, including transportation to and from the **Site**, if any, provided that, in the case of non-**Contractor**-owned equipment rented from a third party, the cost of installation and dismantling are not allowable if such costs are included in the rental rate; plus

26.2.6 Reasonable rental costs of non-**Contractor**-owned necessary plant and equipment other than small tools, plus fuel/energy costs. Except for fuel costs for pick-up trucks which shall be reimbursed based on a consumption of five (5) gallons per shift, fuel costs shall be reimbursed based on actual costs or, in the absence of auditable documentation, the following fuel consumption formula per hour of operation: (.035) x (HP rating) x (Fuel cost/gallon). In lieu of renting, the City reserves the right to direct the purchase of non-operating equipment (scaffolding, sheeting systems, road plates, etc.), with payment on a purchase-salvage/life cycle basis, if less than the projected rental costs; plus

26.2.7 Workers' compensation insurance, and any insurance coverage expressly required by the **City** for the performance of the **Extra Work** which is different than the types of insurance required by Article 22 and Schedule A of the General Conditions. The cost of workers' compensation insurance shall be based upon the Manual Rate for such insurance for the applicable work classifications/codes, in accordance with the most recent schedule promulgated by the New York Compensation Insurance Rating Board; plus

26.2.8 Additional costs incurred as a result of the **Extra Work** for performance and payment bonds; plus

26.2.9 Ten (10%) percent of the total of items in Articles 26.2.1 through 26.2.5 as compensation for overhead, except that no percentage for overhead will be allowed on **Payroll Taxes** or on the premium portion of overtime pay or on sales and personal property taxes. Overhead shall include without limitation, all costs and expenses in connection with administration, management superintendence, small tools, and insurance required by Schedule A of the General Conditions other than workers' compensation insurance; plus

26.2.10 Ten (10%) percent of the total of items in Articles 26.2.1 through 26.2.5, plus item 26.2.9, as compensation for profit, except that no percentage for profit will be allowed on **Payroll Taxes** or on the premium portion of overtime pay or on sales and personal property taxes; plus

26.2.11 Five (5%) percent of the total of items in Article 26.2.6, 26.2.7, and 26.2.8 as compensation for overhead and profit.

26.3 Where the **Extra Work** is performed in whole or in part by other than the **Contractor's** own forces pursuant to Article 26.2, the **Contractor** shall be paid, subject to pre-audit by the **Engineering Audit Officer**, the cost of such **Work** computed in accordance with Article 26.2 above, plus an additional allowance of five (5%) percent to cover the **Contractor's** overhead and profit.

26.4 Where a change is ordered, involving both **Extra Work** and omitted or reduced **Contract Work,** the **Contract** price shall be adjusted, subject to pre-audit by the **EAO**, in an amount based on the difference between the cost of such **Extra Work** and of the omitted or reduced **Work**. The cost of such **Extra Work** and of such omitted or reduced **Work** shall be computed based upon applicable **Contract** unit prices. Where there are no applicable **Contract** unit prices, the cost of such **Extra Work** and of such omitted or reduced **Contract Work** shall

be computed in accordance with items 26.2.1 through 26.2.8. If the cost of such **Extra Work** exceeds the costs of such omitted or reduced **Contract Work**, the **Contract** price shall be increased by the difference, plus percentages for overhead and profit as provided in Articles 26.2.9 through 26.2.11. If the cost of the omitted or reduced **Contract Work** exceeds the cost of the **Extra Work**, then the **Contract** price shall be reduced by the difference.

26.5 Where the **Contractor** and the **Commissioner** can agree upon a fixed price for **Extra Work** in accordance with Article 25.3.2 or another method of payment for **Extra Work** in accordance with Article 25.3.4, or for **Extra Work** ordered in connection with omitted work, such method, subject to pre-audit by the **EAO**, may, at the option of the **Commissioner**, be substituted for the cost plus a percentage method provided in Article 26.2; provided, however, that if the **Extra Work** is performed by a **Subcontractor**, the **Contractor** shall not be entitled to receive more than an additional allowance of five (5%) percent for overhead and profit over the cost of such **Subcontractor's Work** as computed in accordance with Article 26.2.

ARTICLE 27. RESOLUTION OF DISPUTES

27.1 All disputes between the **City** and the **Contractor** of the kind delineated in this article that arise under, or by virtue of, this **Contract** shall be finally resolved in accordance with the provisions of this article and the **PPB** Rules. This procedure for resolving all disputes of the kind delineated herein shall be the exclusive means of resolving any such disputes.

27.1.1 This article shall not apply to disputes concerning matters dealt with in other sections of the **PPB** Rules, or to disputes involving patents, copyrights, trademarks, or trade secrets (as interpreted by the courts of New York State) relating to proprietary rights in computer software.

27.1.2 This article shall apply only to disputes about the scope of work delineated by the **Contract**, the interpretation of **Contract** documents, the amount to be paid for **Extra Work** or disputed work performed in connection with the **Contract**, the conformity of the **Contractor's Work** to the **Contract**, and the acceptability and quality of the **Contractor's Work**; such disputes arise when the **Engineer**, **Resident Engineer**, **Engineering Audit Officer**, or other designee of the **Commissioner** makes a determination with which the **Contractor** disagrees.

27.2 All determinations required by this article shall be made in writing clearly stated, with a reasoned explanation for the determination based on the information and evidence presented to the party making the determination. Failure to make such determination within the time required by this article shall be deemed a non-determination without prejudice that will allow application to the next level.

27.3 During such time as any dispute is being presented, heard, and considered pursuant to this article, the **Contract** terms shall remain in force and the **Contractor** shall continue to perform **Work** as directed by the **ACCO** or the **Engineer**. Failure of the **Contractor** to continue **Work** as directed shall constitute a waiver by the **Contractor** of its claim.

27.4 Presentation of Disputes to **Commissioner**.

Notice of Dispute and Agency Response. The **Contractor** shall present its dispute in writing ("Notice of Dispute") to the **Commissioner** within thirty (30) Days of receiving written notice of the determination or action that is the subject of the dispute. This notice requirement shall not be read to replace any other notice requirements contained in the **Contract**. The Notice of Dispute shall include all the facts, evidence, documents, or other basis upon which the **Contractor** relies in support of its position, as well as a detailed computation demonstrating how any amount of money claimed by the **Contractor** in the dispute was arrived at. Within thirty (30) Days after receipt of the detailed written submission comprising the complete Notice of Dispute, the **Engineer**, **Resident Engineer**, **Engineering Audit Officer**, or other designee of the **Commissioner** shall submit to the **Commissioner** all materials he or she deems pertinent to the dispute. Following initial submissions to the **Commissioner**, either

party may demand of the other the production of any document or other material the demanding party believes may be relevant to the dispute. The requested party shall produce all relevant materials that are not otherwise protected by a legal privilege recognized by the courts of New York State. Any question of relevancy shall be determined by the **Commissioner** whose decision shall be final. Willful failure of the **Contractor** to produce any requested material whose relevancy the **Contractor** has not disputed, or whose relevancy has been affirmatively determined, shall constitute a waiver by the **Contractor** of its claim.

27.4.1 **Commissioner** Inquiry. The **Commissioner** shall examine the material and may, in his or her discretion, convene an informal conference with the **Contractor**, the **ACCO**, and the **Engineer**, **Resident Engineer**, **Engineering Audit Officer**, or other designee of the **Commissioner** to resolve the issue by mutual consent prior to reaching a determination. The **Commissioner** may seek such technical or other expertise as he or she shall deem appropriate, including the use of neutral mediators, and require any such additional material from either or both parties as he or she deems fit. The **Commissioner's** ability to render, and the effect of, a decision hereunder shall not be impaired by any negotiations in connection with the disputed presented, whether or not the **Commissioner** participated therein. The **Commissioner** may or, at the request of any party to the dispute, shall compel the participation of any other **Contractor** with a **Contract** related to the **Work** of this **Contract**, and that **Contractor** shall be bound by the decision of the **Commissioner**. Any **Contractor** thus brought into the dispute resolution proceeding shall have the same rights and obligations under this article as the **Contractor** initiating the dispute.

27.4.2 **Commissioner** Determination. Within thirty (30) days after the receipt of all materials and information, or such longer time as may be agreed to by the parties, the **Commissioner** shall make his or her determination and shall deliver or send a copy of such determination to the **Contractor**, the **ACCO**, and **Engineer**, **Resident Engineer**, **Engineering Audit Officer**, or other designee of the **Commissioner**, as applicable, together with a statement concerning how the decision may be appealed.

27.4.3 Finality of **Commissioner** Decision. The **Commissioner's** decision shall be final and binding on all parties, unless presented to the Contract Dispute Resolution Board pursuant to this article. The **City** may not take a petition to the Contract Dispute Resolution Board. However, should the **Contractor** take such a petition, the **City** may seek, and the Contract Dispute Resolution Board may render, a determination less favorable to the **Contractor** and more favorable to the **City** than the decision of the **Commissioner**.

27.5 Presentation of Dispute to the **Comptroller**. Before any dispute may be brought by the **Contractor** to the Contract Dispute Resolution Board, the **Contractor** must first present its claim to the **Comptroller** for his or her review, investigation, and possible adjustment.

27.5.1 Time, Form, and Content of Notice. Within thirty (30) days of its receipt of a decision by the **Commissioner**, the **Contractor** shall submit to the **Comptroller** and to the **Commissioner** a Notice of Claim regarding its dispute with the **Agency**. The Notice of Claim shall consist of (i) a brief Written statement of the substance of the dispute, the amount of money, if any, claimed and the reason(s) the **Contractor** contends the dispute was wrongly decided by the **Commissioner**; (ii) a copy of the written decision of the **Commissioner**; and (iii) a copy of all materials submitted by the **Contractor** to the **Agency**, including the Notice of Dispute. The **Contractor** may not present to the **Comptroller** any material not presented to the **Commissioner**, except at the request of the **Comptroller**.

27.5.2 **Agency** Response. Within thirty (30) days of receipt of the Notice of Claim, the **Agency** shall make available to the **Comptroller** a copy of all material submitted by the **Agency** to the **Commissioner** in connection with the dispute. The **Agency** may not present to the **Comptroller** any material not presented to the **Commissioner** except at the request of the **Comptroller**.

27.5.3 **Comptroller** Investigation. The **Comptroller** may investigate the claim in dispute and, in the course of such investigation, may exercise all powers provided in section 7-201 and 7-203 of the New York City Administrative Code. In addition, the **Comptroller** may demand of either party, and such party shall provide, whatever additional material the **Comptroller** deems pertinent to the claim, including original business records of the **Contractor**. Willful failure of the **Contractor** to produce within fifteen (15) days any material requested by the **Comptroller** shall constitute a waiver by the **Contractor** of its claim. The **Comptroller** may also schedule an informal conference to be attended by the **Contractor**, **Agency** representatives, and any other personnel desired by the **Comptroller**.

27.5.4 Opportunity of **Comptroller** to Compromise or Adjust Claim. The **Comptroller** shall have forty-five (45) days from his or her receipt of all materials referred to in Article 27.5.3 to investigate the disputed claim. The period for investigation and compromise may be further extended by agreement between the **Contractor** and the **Comptroller**, to a maximum of ninety (90) days from the **Comptroller's** receipt of all materials. The **Contractor** may not present its petition to the Contract Dispute Resolution Board until the period for investigation and compromise delineated in Article 27.5.4 has expired. In compromising or adjusting any claim hereunder, the **Comptroller** may not revise or disregard the terms of the **Contract** between the parties.

27.6 Contract Dispute Resolution Board. There shall be a Contract Dispute Resolution Board composed of:

27.6.1 The chief administrative law judge of the Office of Administrative Trials and Hearings (OATH) or his/her designated OATH administrative law judge, who shall act as chairperson, and may adopt operational procedures and issue such orders consistent with this article as may be necessary in the execution of the Contract Dispute Resolution Board's functions, including, but not limited to, granting extensions of time to present or respond to submissions;

27.6.1.1 The **CCPO** or his/her designee; any designee shall have the requisite background to consider and resolve the merits of the dispute and shall not have participated personally and substantially in the particular matter that is the subject of the dispute or report to anyone who so participated; and

27.6.2 A person with appropriate expertise who is not an employee of the City. This person shall be selected by the presiding administrative law judge from a prequalified panel of individuals, established and administered by OATH with appropriate background to act as decision-makers in a dispute. Such individual may not have a contract or dispute with the City or be an officer or employee of any company or organization that does, or regularly represents persons, companies, or organizations having disputes with the City.

27.7 Petition to the Contract Dispute Resolution Board. In the event the claim has not been settled or adjusted by the **Comptroller** within the period provided in this article, the **Contractor**, within thirty (30) days thereafter, may petition the Contract Dispute Resolution Board to review the **Commissioner's** determination.

27.7.1 Form and Content of Petition by **Contractor**. The **Contractor** shall present its dispute to the Contract Dispute Resolution Board in the form of a petition, which shall include (i) a brief written statement of the substance of the dispute, the amount of money, if any, claimed, and the reason(s) the Contractor contends the dispute was wrongly decided by the **Commissioner**; (ii) a copy of the written Decision of the **Commissioner**, (iii) copies of all materials submitted by the **Contractor** to the Agency; (iv) a copy of the written decision of the **Comptroller**, if any, and (v) copies of all correspondence with, or written material submitted by the **Contractor**, to the **Comptroller**. The **Contractor** shall concurrently submit four (4) complete sets of the Petition: one set to the Corporation Counsel (Attn: Commercial and Real Estate Litigation Division) and three (3) sets to the Contract

Dispute Resolution Board at OATH's offices with proof of service on the Corporation Counsel. In addition, the **Contractor** shall submit a copy of the written statement of the substance of the dispute, cited in (i) above, to both the **Commissioner** and the **Comptroller**.

27.7.2 **Agency** Response. Within thirty (30) Days of its receipt of the petition by the Corporation Counsel, the **Agency** shall respond to the brief written statement of the **Contractor** and make available to the Contract Dispute Resolution Board all material it submitted to the **Commissioner** and **Comptroller**. Three (3) complete copies of the **Agency** response shall be provided to the Contract Dispute Resolution Board and one to the **Contractor**. Extensions of time for submittal of the **Agency** response shall be given as necessary upon a showing of good cause or, upon consent of the parties, for an initial period of up to thirty (30) Days.

27.7.3 Further Proceedings. The Contract Dispute Resolution Board shall permit the **Contractor** to present its case by submission of memoranda, briefs, and oral argument. The Contract Dispute Resolution Board shall also permit the **Agency** to present its case in response to the **Contractor** by submission of memoranda, briefs, and oral argument. If requested by the Corporation Counsel, the **Comptroller** shall provide reasonable assistance in the preparation of the **Agency's** case. Neither the **Contractor** nor the **Agency** may support its case with any documentation or other material that was not considered by the **Comptroller**, unless requested by the Contract Dispute Resolution Board. The Contract Dispute Resolution Board, in its discretion, may seek such technical or other expert advice as it shall deem appropriate and may seek, on its own or upon application of a party, any such additional material from any party as it deems fit. The Contract Dispute Resolution Board, in its discretion, may combine more than one dispute between the parties for concurrent resolution.

27.7.4 Contract Dispute Resolution Board Determination. Within forty-five (45) Days of the conclusion of all written submissions and oral arguments, the Contract Dispute Resolution Board shall render a written decision resolving the dispute. In an unusually complex case, the Contract Dispute Resolution Board may render its decision in a longer period, not to exceed ninety (90) Days, and shall so advise the parties at the commencement of this period. The Contract Dispute Resolution Board's decision must be consistent with the terms of the **Contract**. Decisions of the Contract Dispute Resolution Board shall only resolve matters before the Contract Dispute Resolution Board and shall not have precedential effect with respect to matters not before the Contract Dispute Resolution Board.

27.7.5 Notification of Contract Dispute Resolution Board Decision. The Contract Dispute Resolution Board shall send a copy of its decision to the **Contractor**, the **ACCO**, the Engineer, the **Comptroller**, the Corporation Counsel, the Director of the Office of Construction, and the **PPB**. A decision in favor of the **Contractor** shall be subject to the prompt payment provisions of the **PPB** Rules. The Required Payment Date shall be thirty (30) Days after the date the parties are formally notified of the Contract Dispute Resolution Board's decision.

27.7.6 Finality of Contract Dispute Resolution Board Decision. The Contract Dispute Resolution Board's decision shall be final and binding on all parties. Any party may seek review of the Contract Dispute Resolution Board's decision solely in the form of a challenge, filed within four (4) months of the date of the Contract Dispute Resolution Board's decision, in a court of competent jurisdiction of the State of New York, County of New York pursuant to Article 78 of the Civil Practice Laws and Rules. Such review by the court shall be limited to the question of whether or not the Contract Dispute Resolution Board's decision was made in violation of lawful procedure, was affected by an error of **Law**, or was arbitrary and capricious or an abuse of discretion. No evidence or information shall be introduced or relied upon in such proceeding that was not presented to the Contract Dispute Resolution Board in accordance with this article.

27.8 Any termination, cancellation, or alleged breach of the **Contract** prior to or during the pendency of any proceedings pursuant to this article shall not affect or impair the ability of the **Commissioner** or Contract Dispute Resolution Board to make a binding and final decision pursuant to this article.

ARTICLE 28. RECORD KEEPING FOR EXTRA OR DISPUTED WORK

28.1 While the **Contractor** or any of its **Subcontractors** is performing **Extra Work** on a Time and Material Basis ordered by the **Commissioner** under Article 25, or is performing disputed **Work**, or complying with a determination or order under protest in accordance with Articles 27 and 30, in each such case the **Contractor** shall furnish the **Resident Engineer** daily with three (3) copies of written statements signed by the **Contractor's** representative at the **Site** showing:

28.1.1 The name and number of each Worker employed on such **Work** or engaged in complying with such determination or order, the number of hours employed, and the character of the **Work** each is doing; and

28.1.2 The nature and quantity of any materials, plant and equipment furnished or used in connection with the performance of such **Work** or compliance with such determination or order, and from whom purchased or rented.

28.2 A copy of such statement will be countersigned by the **Resident Engineer**, noting thereon any items not agreed to or questioned, and will be returned to the **Contractor** within two (2) **Days** after submission.

28.3 The **Contractor** and its **Subcontractors**, when required by the **Commissioner**, or the **Comptroller**, shall also produce for inspection, at the office of the **Contractor** or **Subcontractor**, any and all of its books, bid documents, financial statements, vouchers, records, daily job diaries and reports, and cancelled checks, and any other documents relating to showing the nature and quantity of the labor, materials, plant and equipment actually used in the performance of such **Work**, or in complying with such determination or order, and the amounts expended therefor, and shall permit the **Commissioner** and the **Comptroller** to make such extracts therefrom, or copies thereof, as they or either of them may desire.

28.4 In connection with the examination provided for herein, the **Commissioner**, upon demand therefor, will produce for inspection by the **Contractor** such records as the **Agency** may have with respect to such **Extra** or disputed **Work** performed under protest pursuant to order of the **Commissioner**, except those records and reports which may have been prepared for the purpose of determining the accuracy and validity of the **Contractor's** claim.

28.5 Failure to comply strictly with these requirements shall constitute a waiver of any claim for extra compensation or damages on account of the performance of such **Work** or compliance with such determination or order.

ARTICLE 29. OMITTED WORK

29.1 If any **Contract Work** in a lump sum **Contract**, or if any part of a lump sum item in a unit price, lump sum, or percentage-bid **Contract** is omitted by the **Commissioner** pursuant to Article 33, the **Contract** price, subject to audit by the EAO, shall be reduced by a pro rata portion of the lump sum bid amount based upon the percent of **Work** omitted subject to Article 29.4. For the purpose of determining the pro rata portion of the lump sum bid amount, the bid breakdown submitted in accordance with Article 41 shall be considered, but shall not be the determining factor.

29.2 If the whole of a lump sum item or units of any other item is so omitted by the **Commissioner** in a unit price, lump sum, or percentage-bid **Contract**, then no payment will be made therefor except as provided in Article 29.4.

29.3 For units that have been ordered but are only partially completed, the unit price shall be reduced by a pro rata portion of the unit price bid based upon the percentage of **Work** omitted subject to Article 29.4.

29.4 In the event the **Contractor**, with respect to any omitted **Work**, has purchased any non-cancelable material and/or equipment that is not capable of use except in the performance of this **Contract** and has been specifically fabricated for the sole purpose of this **Contract**, but not yet incorporated into the **Work**, the **Contractor** shall be paid for such material and/or equipment in accordance with Article 64.2.1(b); provided, however, such payment is contingent upon the **Contractor's** delivery of such material and/or equipment in acceptable condition to a location designated by the **City**.

29.5 The **Contractor** agrees to make no claim for damages or for loss of overhead and profit with regard to any omitted **Work**.

ARTICLE 30. NOTICE AND DOCUMENTATION OF COSTS AND DAMAGES; PRODUCTION OF FINANCIAL RECORDS

30.1 If the **Contractor** shall claim to be sustaining damages by reason of any act or omission of the **City** or its agents, it shall submit to the **Commissioner** within forty-five (45) **Days** from the time such damages are first incurred, and every thirty (30) **Days** thereafter for as long as such damages are incurred, verified statements of the details and the amounts of such damages, together with documentary evidence of such damages. The **Contractor** may submit any of the above statements within such additional time as may be granted by the **Commissioner** in writing upon written request therefor. Failure of the **Commissioner** to respond in writing to a written request for additional time within thirty (30) **Days** shall be deemed a denial of the request. On failure of the **Contractor** to fully comply with the foregoing provisions, such claims shall be deemed waived and no right to recover on such claims shall exist. Damages that the **Contractor** may claim in any action or dispute resolution procedure arising under or by reason of this **Contract** shall not be different from or in excess of the statements and documentation made pursuant to this article.

30.2 In addition to the foregoing statements, the **Contractor** shall, upon notice from the **Commissioner**, produce for examination at the **Contractor's** office, by the **Engineer**, **Architect** or **Project Manager**, all of its books of account, bills, invoices, payrolls, subcontracts, time books, daily reports, bank deposit books, bank statements, check books, cancelled checks, showing all of its acts and transactions in connection with or relating to or arising by reason of this **Contract**, and submit itself and persons in its employment, for examination under oath by any person designated by the **Commissioner** or **Comptroller** to investigate claims made or disputes against the **City** under this **Contract**. At such examination, a duly authorized representative of the **Contractor** may be present.

30.3 In addition to the statements required under Article 28 and this Article, the **Contractor** and/or its **Subcontractor** shall, within thirty (30) **Days** upon notice from the **Commissioner** or **Comptroller**, produce for examination at the **Contractor's** and/or **Subcontractor's** office, by a representative of either the **Commissioner** or **Comptroller**, all of its books of account, bid documents, financial statements, accountant workpapers, bills, invoices, payrolls, subcontracts, time books, daily reports, bank deposit books, bank statements, check books, cancelled checks, showing all of its acts and transactions in connection with or relating to or arising by reason of this **Contract**. Further, the **Contractor** and/or its **Subcontractor** shall submit any person in its employment, for examination under oath by any person designated by the **Commissioner** or **Comptroller** to investigate claims made or disputes against the **City** under this **Contract**. At such examination, a duly authorized representative of the **Contractor** may be present.

30.4 Unless the information and examination required under Article 30.3 is provided by the **Contractor** and/or its **Subcontractor** upon thirty (30) **Days** notice from the **Commissioner** or **Comptroller**, or upon the **Commissioner's** or **Comptroller's** written authorization to extend the time to comply, the **City** shall be released

from all claims arising under, relating to or by reason of this **Contract**, except for sums certified by the **Commissioner** or **Comptroller** to be due under the provisions of this **Contract**. It is further stipulated and agreed that no person has the power to waive any of the foregoing provisions and that in any action or dispute resolution procedure against the **City** to recover any sum in excess of the sums certified by the **Commissioner** or **Comptroller** to be due under or by reason of this **Contract**, the **Contractor** must allege in its complaint and prove, at trial or during such dispute resolution procedure, compliance with the provisions of this Article.

30.5 In addition, after the commencement of any action or dispute resolution procedure by the **Contractor** arising under or by reason of this **Contract**, the **City** shall have the right to require the **Contractor** to produce for examination under oath, up until the trial of the action or hearing before the Contract Dispute Resolution Board, the books and documents described in Article 30.3 and submit itself and all persons in its employ for examination under oath. If this Article is not complied with as required, then the **Contractor** hereby consents to the dismissal of the action or dispute resolution procedure.

CHAPTER VII
POWERS OF THE RESIDENT ENGINEER, THE ENGINEER OR ARCHITECT AND THE COMMISSIONER

ARTICLE 31. THE RESIDENT ENGINEER

31.1 The **Resident Engineer** shall have the power to inspect, supervise and control the performance of the **Work**, subject to review by the **Commissioner**. The **Resident Engineer** shall not, however, have the power to issue an **Extra Work** order, except as specifically designated in writing by the **Commissioner**.

ARTICLE 32. THE ENGINEER OR ARCHITECT OR PROJECT MANAGER

32.1 The **Engineer** or **Architect** or **Project Manager**, in addition to those matters elsewhere herein delegated to the **Engineer** and expressly made subject to his/her determination, direction or approval, shall have the power, subject to review by the **Commissioner**:

32.1.1 To determine the amount, quality, and location of the **Work** to be paid for hereunder; and

32.1.2 To determine all questions in relation to the **Work**, to interpret the **Contract Drawings**, **Specifications**, and **Addenda**, and to resolve all patent inconsistencies or ambiguities therein; and

32.1.3 To determine how the **Work** of this **Contract** shall be coordinated with **Work** of other **Contractors** engaged simultaneously on this **Project**, including the power to suspend any part of the **Work**, but not the whole thereof; and

32.1.4 To make minor changes in the **Work** as he/she deems necessary, provided such changes do not result in a net change in the cost to the **City** or to the **Contractor** of the **Work** to be done under the **Contract**; and

32.1.5 To amplify the **Contract Drawings**, add explanatory information and furnish additional **Specifications** and drawings, consistent with this **Contract**.

32.2 The foregoing enumeration shall not imply any limitation upon the power of the **Engineer** or **Architect** or **Project Manager**, for it is the intent of this **Contract** that all of the **Work** shall generally be subject to his/her determination, direction and approval, except where the determination, direction or approval of someone other than the **Engineer** or **Architect** or **Project Manager** is expressly called for herein.

32.3 The **Engineer** or **Architect** or **Project Manager** shall not, however, have the power to issue an **Extra Work** order, except as specifically designated in writing by the **Commissioner.**

ARTICLE 33. THE COMMISSIONER

33.1 The **Commissioner**, in addition to those matters elsewhere herein expressly made subject to his/her determination, direction or approval, shall have the power:

33.1.1 To review and make determinations on any and all questions in relation to this **Contract** and its performance; and

33.1.2 To modify or change this **Contract** so as to require the performance of **Extra Work** (subject, however, to the limitations specified in Article 25) or the omission of **Contract Work**; and

33.1.3 To suspend the whole or any part of the **Work** whenever in his/her judgment such suspension is required:

33.1.3(a) In the interest of the **City** generally; or

33.1.3(b) To coordinate the **Work** of the various **Contractors** engaged on this **Project** to the provisions of Article 12; or

33.1.3(c) To expedite the completion of the entire **Project** even though the completion of this particular **Contract** may thereby be delayed.

ARTICLE 34. NO ESTOPPEL

34.1 Neither the **City** nor any **Agency**, officer, agent or employee thereof, shall be bound, precluded or estopped by any determination, decision, approval, order, letter, payment or certificate made or given under or in connection with this **Contract** by the **City**, the **Commissioner**, the **Resident Engineer**, or any other officer, agent or employee of the **City**, either before or after the final completion and acceptance of the **Work** and payment therefor:

34.1.1 From showing the true and correct classification, amount, quality or character of the **Work** actually done; or that any such determination, decision, order, letter, payment or certificate was untrue, incorrect or improperly made in any particular, or that the **Work**, or any part thereof, does not in fact conform to the requirements of this **Contract**; and

34.1.2 From demanding and recovering from the **Contractor** any overpayment made to it, or such damages as the **City** may sustain by reason of the **Contractor's** failure to perform each and every part of its **Contract.**

CHAPTER VIII
LABOR PROVISIONS

ARTICLE 35. EMPLOYEES

35.1 The **Contractor** and its **Subcontractors** shall not employ on the **Work**:

35.1.1 Anyone who is not competent, faithful and skilled in the **Work** for which he/she shall be employed; and whenever the **Commissioner** shall inform the **Contractor**, in writing, that any employee is, in his/her opinion, incompetent, unfaithful or disobedient, that

employee shall be discharged from the **Work** forthwith, and shall not again be employed upon it; or

35.1.2 Any labor, materials or means whose employment, or utilization during the course of this **Contract**, may tend to or in any way cause or result in strikes, work stoppages, delays, suspension of **Work** or similar troubles by workers employed by the **Contractor** or its **Subcontractors**, or by any of the trades working in or about the buildings and premises where **Work** is being performed under this **Contract**, or by **Other Contractors** or their **Subcontractors** pursuant to other Contracts, or on any other building or premises owned or operated by the **City**, its **Agencies**, departments, boards or authorities. Any violation by the **Contractor** of this requirement may, upon certification of the **Commissioner**, be considered as proper and sufficient cause for declaring the **Contractor** to be in default, and for the **City** to take action against it as set forth in Chapter X of this **Contract**, or such other article of this **Contract** as the **Commissioner** may deem proper; or

35.1.3 In accordance with Section 220.3-e of the Labor Law of the State of New York (hereinafter "Labor **Law**"), the **Contractor** and its **Subcontractors** shall not employ on the **Work** any apprentice, unless he/she is a registered individual, under a bona fide program registered with the New York State Department of Labor. The allowable ratio of apprentices to journey-level workers in any craft classification shall not be greater than the ratio permitted to the **Contractor** as to its **Work** force on any job under the registered program. Any employee listed on a payroll at an apprentice wage rate, who is not registered as above, shall be paid the wage rate determined by the **Comptroller** of the **City** for the classification of **Work** actually performed. The **Contractor** or **Subcontractor** will be required to furnish written evidence of the registration of its program and apprentices as well as all the appropriate ratios and wage rates, for the area of the construction prior to using any apprentices on the **Contract Work**.

35.2 If the total cost of the **Work** under this **Contract** is at least two hundred fifty thousand dollars, all laborers, workers, and mechanics employed in the performance of the **Contract** on the public work site, either by the **Contractor**, **Subcontractor** or other person doing or contracting to do the whole or a part of the work contemplated by the contract, shall be certified prior to performing any **Work** as having successfully completed a course in construction safety and health approved by the United States department of labor's occupational safety and health administration that is at least ten hours in duration.

ARTICLE 36. NO DISCRIMINATION

36.1 The **Contractor** specifically agrees, as required by Labor Law Section 220-e, as amended, that:

36.1.1 In the hiring of employees for the performance of **Work** under this **Contract** or any subcontract hereunder, neither the **Contractor**, **Subcontractor**, nor any person acting on behalf of such **Contractor** or **Subcontractor**, shall by reason of race, creed, color or national origin discriminate against any citizen of the State of New York who is qualified and available to perform the **Work** to which the employment relates;

36.1.2 Neither the **Contractor**, **Subcontractor**, nor any person on its behalf shall, in any manner, discriminate against or intimidate any employee hired for the performance of work under this **Contract** on account of race, creed, color or national origin;

36.1.3 There may be deducted from the amount payable to the **Contractor** by the **City** under this **Contract** a penalty of fifty ($50.00) dollars for each person for each **Day** during which such person was discriminated against or intimidated in violation of the provisions of this **Contract**; and

36.1.4 This **Contract** may be cancelled or terminated by the **City** and all moneys due or to become due hereunder may be forfeited, for a second or any subsequent violation of the terms or conditions of this article.

36.1.5 The aforesaid provisions of this article covering every **Contract** for or on behalf of the State or a municipality for the manufacture, sale or distribution of materials, equipment or supplies shall be limited to operations performed within the territorial limits of the State of New York.

36.2 The Contractor specifically agrees, as required by Section 6-108 of the Administrative Code, as amended, that:

36.2.1 It shall be unlawful for any person engaged in the construction, alteration or repair of buildings or engaged in the construction or repair of streets or highways pursuant to a **Contract** with the **City** or engaged in the manufacture, sale or distribution of materials, equipment or supplies pursuant to a **Contract** with the **City** to refuse to employ or to refuse to continue in any employment any person on account of the race, color or creed of such person.

36.2.2 It shall be unlawful for any person or any servant, agent or employee of any person, described in Article 36.1.2, to ask, indicate or transmit, orally or in writing, directly or indirectly, the race, color or creed or religious affiliation of any person employed or seeking employment from such person, firm or corporation.

36.2.3 Breach of the foregoing provisions shall be deemed a violation of a material provision of this **Contract**.

36.2.4 Any person, or the employee, manager or owner of or officer of such firm or corporation who shall violate any of the provisions of this section shall, upon conviction thereof, be punished by a fine of not more than one hundred ($100.00) dollars or by imprisonment for not more than thirty (30) **Days**, or both.

36.3 This **Contract** is subject to the requirements of Executive Order No. 50 (1980) ("E.O. 50"), as revised, and the Rules and Regulations promulgated thereunder. No **Contract** will be awarded unless and until these requirements have been complied with in their entirety. By signing this **Contract**, the **Contractor** agrees that it:

36.3.1 Will not engage in any unlawful discrimination against any employee or applicant for employment because of race, creed, color, national origin, sex, age, disability, marital status or sexual orientation with respect to all employment decisions including, but not limited to, recruitment, hiring, upgrading, demotion, downgrading, transfer, training, rates of pay or other forms of compensation, layoff, termination, and all other terms and conditions of employment; and

36.3.2 Will not engage in any unlawful discrimination in the selection of **Subcontractors** on the basis of the owner's race, color, creed, national origin, sex, age, disability, marital status or sexual orientation; and

36.3.3 Will state in all solicitations or advertisements for employees placed by or on behalf of the **Contractor** that all qualified applicants will receive consideration for employment without unlawful discrimination based on race, creed, color, national origin, sex, age, citizens status, disability, marital status, sexual orientation, or that it is an equal employment opportunity employer; and

36.3.4 Will send to each labor organization or representative of workers with which it has a Collective Bargaining Agreement or other Contract or memorandum of understanding, written

notification of its equal employment opportunity commitments under E.O. 50 and the Rules and Regulations promulgated thereunder; and

36.3.5 Will furnish all information and reports including an Employment Report before the award of the **Contract** which are required by E.O. 50, the Rules and Regulations promulgated thereunder, and orders of the Department of Business Services, Division of Labor Services (**"DLS"**) and will permit access to its books, records and accounts by the **DLS** for the purposes of investigation to ascertain compliance with such rules, regulations, and orders.

36.4 The **Contractor** understands that in the event of its noncompliance with the nondiscrimination clauses of this **Contract** or with any of such rules, regulations, or orders, such noncompliance shall constitute a material breach of this **Contract** and noncompliance with E.O. 50 and the Rules and Regulations promulgated thereunder. After a hearing held pursuant to the rules of the **DLS**, the Director of the **DLS** may direct the **Commissioner** to impose any or all of the following sanctions:

36.4.1 Disapproval of the **Contractor**; and/or

36.4.2 Suspension or termination of the **Contract**; and/or

36.4.3 Declaring the **Contractor** in default; and/or

36.4.4 In lieu of any of the foregoing sanctions, the Director of the **DLS** may impose an employment program.

Failure to comply with E.O. 50 and the rules and regulations promulgated thereunder, in one or more instances, may result in the **Agency** declaring the **Contractor** to be non-responsible.

The **Contractor** further agrees that it will refrain from entering into any **Contract** or **Contract** modification subject to E.O. 50 and the rules and regulations promulgated thereunder with a **Subcontractor** who is not in compliance with the requirements of E.O. 50 and the rules and regulations promulgated thereunder.

36.5 The **Contractor** specifically agrees, as required by Section 6-123 of the Administrative Code, that:

36.5.1 The **Contractor** will not engage in any unlawful discriminatory practice in violation of Title VIII of the Administrative Code;

36.5.2 every agreement between the **Contractor** and its **Subcontractors** in excess of $50,000 shall include a provision that the **Subcontractor** shall not engage in any unlawful discriminatory practice as defined in title viii of the Administrative Code (Section 8-101 et. seq.); and

36.5.3 Any failure to comply with this Article 36.5 may subject the **Contractor** to the remedies set forth in Section 6-123 of the Administrative Code, including, where appropriate, sanctions such as withholding of payment, imposition of an employment program, finding the **Contractor** to be in default, cancellation of the **Contract**, or any other sanction or remedy provided by **Law** or **Contract**.

ARTICLE 37. LABOR LAW REQUIREMENTS

37.1 The **Contractor** shall strictly comply with all applicable provisions of the Labor Law, as amended. Such compliance is a material term of this **Contract**.

37.2 The **Contractor** specifically agrees, as required by Labor Law Section 220 and 220-d, as amended, that:

37.2.1 Hours of **Work**: No laborer, worker, or mechanic in the employ of the **Contractor**, **Subcontractor** or other person doing or contracting to do the whole or a part of the **Work** contemplated by this **Contract** shall be permitted or required to work more than eight (8) hours in any one (1) calendar **Day**, or more than five (5) **Days** in any one (1) week, except as provided in the Labor Law and in cases of extraordinary emergency including fire, flood, or danger to life or property, or in the case of national emergency when so proclaimed by the President of the United States of America.

37.2.2 In situations in which there are not sufficient laborers, workers and mechanics who may be employed to carry on expeditiously the **Work** contemplated by this **Contract** as a result of such restrictions upon the number of hours and days of labor, and the immediate commencement or prosecution or completion without undue delay of the **Work** is necessary for the preservation of the **Site** and/or for the protection of the life and limb of the persons using the same, such laborers, workers, and mechanics shall be permitted or required to work more than eight (8) hours in any one (1) **Day**; or five (5) **Days** in any one (1) week; provided, however, that upon application of any **Contractor**, the **Commissioner** shall have first certified to the Commissioner of Labor of the State of New York (hereinafter "Commissioner of Labor") that such public **Work** is of an important nature and that a delay in carrying it to completion would result in serious disadvantage to the public; and provided, further, that such Commissioner of Labor shall have determined that such an emergency does in fact exist as provided in Labor Law Section 220.2.

37.2.3 Failure of the **Commissioner** to make such a certification to the Commissioner of Labor shall not entitle the **Contractor** to damages for delay or for any cause whatsoever.

37.2.4 Prevailing Rate of Wages: The wages to be paid for a legal day's **Work** to laborers, workers, or mechanics employed upon the **Work** contemplated by this **Contract** or upon any materials to be used thereon shall not be less than the "prevailing rate of wage" as defined in Labor **Law** Section 220, and as fixed by the **Comptroller** in the attached Schedule of Wage Rates and in updated schedules thereof. The prevailing wage rates and supplemental benefits to be paid are those in effect at the time the **Work** is being performed.

37.2.5 Requests for interpretation or correction in the Information for Bidders includes all requests for clarification of the classification of trades to be employed in the performance of the **Work** under this **Contract**. In the event that a trade not listed in the **Contract** is in fact employed during the performance of this **Contract**, the **Contractor** shall be required to obtain from the **Agency** the prevailing wage rates and supplementary benefits for the trades used and to complete the performance of this **Contract** at the price at which the **Contract** was awarded.

37.2.6 Minimum Wages: Except for employees whose wage is required to be fixed pursuant to Labor Law Section 220, all persons employed by the **Contractor** and any **Subcontractor** in the manufacture or furnishing of the supplies, materials, or equipment, or the furnishing of work, labor, or services, used in the performance of this **Contract**, shall be paid, without subsequent deduction or rebate unless expressly authorized by **Law**, not less than the sum mandated by **Law**. Minimum wages shall be the rates fixed by Federal **Law** and regulations.

37.3 Working Conditions: No part of the **Work**, labor or services shall be performed or rendered by the **Contractor** in any plants, factories, buildings or surroundings or under working conditions which are unsanitary or hazardous or dangerous to the health and safety of employees engaged in the performance of this **Contract**. Compliance with the safety, sanitary and factory inspection **Laws** of the state in which the **Work** is to be performed shall be prima facie evidence of compliance with this article.

37.4 Prevailing Wage Enforcement: The **Contractor** agrees to pay for all costs incurred by the **City** in enforcing prevailing wage requirements, including the cost of any investigation conducted by or on behalf of the **Agency** or the **Comptroller,** where the **City** discovers a failure to comply with any of the requirements of this Article 37 by the **Contractor** or its **Subcontractor(s).** The **Contractor** also agrees, that should it fail or refuse to pay for any such investigation, the **Agency** is hereby authorized to deduct from a **Contractor's** account an amount equal to the cost of such investigation.

37.4.1 The Labor Law Section 220 and Section 220-d, as amended, provide that this **Contract** shall be forfeited and no sum paid for any Work done hereunder on a second conviction for willfully paying less than:

37.4.1(a) The stipulated wage scale as provided in Labor Law Section 220, as amended, or

37.4.1(b) Less than the stipulated minimum hourly wage scale as provided in Labor Law Section 220-d, as amended.

37.4.2 For any breach or violation of either Working Conditions (Article 37.3) and Minimum Wages (Article 37.2.6), the party responsible therefore shall be liable to the **City** for liquidated damages, which may be withheld from any amounts due on any **Contracts** with the **City** of such party responsible, or may be recovered in suits brought by the Corporation Counsel in the name of the **City**, in addition to damage for any other breach of this **Contract**, a sum equal to the amount of any underpayment of wages due to any employee engaged in the performance of this **Contract**. In addition, the **Commissioner** shall have the right to cancel **Contracts** and enter into other **Contracts** for the completion of the original **Contract**, with or without public letting, and the original **Contractor** shall be liable for any additional cost. All sums withheld or recovered as deductions, rebates, refunds, or underpayment of wages hereunder, shall be held in a special deposit account and shall be paid without interest, on order of the **Comptroller**, directly to the employees who have been paid less than minimum rates of pay as set forth herein and on whose account such sums were withheld or recovered, provided that no claims by employees for such payments shall be entertained unless made within two (2) years from the date of actual notice to the **Contractor** of the withholding or recovery of such sums by the **City**.

37.4.3 A determination by the **Comptroller** that a **Contractor** and/or its **Subcontractor** willfully violated Labor Law Section 220 will be forwarded to the **City's** five District Attorneys for review.

37.4.4 The **Contractor's** or **Subcontractor's** noncompliance with this article and Labor **Law** Section 220, may result in an unsatisfactory performance evaluation and the **Comptroller** may also find and determine that the **Contractor** or **Subcontractor** willfully violated the New York Labor **Law**.

37.4.4(a) An unsatisfactory performance evaluation for noncompliance with this article may result in a determination that the **Contractor** is a non-responsible bidder on subsequent procurements with the **City** and thus a rejection of a future award of a contract with the **City**, as well as any other sanctions provided for by **Law**.

37.4.4(b) Labor **Law** Section 220-b, as amended, provides that when two (2) final determinations have been rendered against a **Contractor** or **Subcontractor** within any consecutive six (6) year period determining that such **Contractor** or **Subcontractor** has willfully failed to pay the prevailing rate of wages or to provide supplements in accordance with the Labor **Law** and this article, whether such failures were concurrent or consecutive and whether or not such final determinations concerning separate public work projects are rendered

simultaneously, such **Contractor** or **Subcontractor** shall be ineligible to submit a bid on or be awarded any public work contract with the **City** for a period of five (5) years from the second final determination. If the final determination involves the falsification of payroll records or the kickback of wages or supplements, the **Contractor** or **Subcontractor** shall be ineligible to submit a bid on or be awarded any public work contract with the **City** for a period of five (5) years from the first final determination.

37.4.4(c) Labor **Law** Section 220, as amended, provides that the **Contractor** or **Subcontractor** found to have violated this article may be directed to make payment of wages or supplements including interest found to be due, and the **Contractor** or **Subcontractor** may be directed to make payment of a further sum as a civil penalty in an amount not exceeding twenty-five (25%) percent of the total amount found to be due.

37.5 The **Contractor** and its **Subcontractors** shall within ten (10) **Days** after mailing of a Notice of Award or written order, post in prominent and conspicuous places in each and every plant, factory, building, and structure where employees of the **Contractor** and its **Subcontractors** engaged in the performance of this **Contract** are employed, notices furnished by the **City**, in relation to prevailing wages and supplements, minimum wages and other stipulations contained in Sections 220 and 220-h of the Labor **Law**, and the **Contractor** and its **Subcontractors** shall continue to keep such notices posted in such prominent and conspicuous places until **Final Acceptance** of the supplies, materials, equipment, or **Work**, labor, or services required to be furnished or rendered under this **Contract**.

37.6 The **Contractor** shall strictly comply with all of the provisions of Articles 37.6.1 through 37.6.5, and provide for all workers, laborers or mechanics in its employ, the following:

37.6.1 Notices Posted At **Site**: Post, in a location designated by the **City**, schedules of prevailing wages and supplements for this **Project**, a copy of all re-determinations of such schedules for the **Project**, the Workers' Compensation **Law** Section 51 notice, all other notices required by law to be posted at the **Site**, the **City** notice that this **Project** is a public works **Project** on which each worker is entitled to receive the prevailing wages and supplements for the occupation at which he or she is working, and all other notices which the **City** directs the **Contractor** to post. The **Contractor** shall provide a surface for such notices which is satisfactory to the **City**. The **Contractor** shall maintain and keep current such notices in a legible manner and shall replace any notice or schedule which is damaged, defaced, illegible or removed for any reason. The **Contractor** shall post such notices before commencing any **Work** on the **Site** and shall maintain such notices until all **Work** on the **Site** is complete; and

37.6.2 Daily **Site** Sign-in Sheets: Maintain daily **Site** sign-in sheets, and require that **Subcontractors** maintain daily **Site** sign-in sheets for its employees, which include blank spaces for an employee's name to be both printed and signed, job title, date started and Social Security number, the time the employee began **Work** and the time the employee left **Work**, until **Final Acceptance** of the supplies, materials, equipment, or **Work**, labor, or services to be furnished or rendered under this **Contract** unless exception is granted by the Comptroller upon application by the **Agency**. In the alternative, subject to the approval of the CCPO, the **Contractor** and **Subcontractor** may maintain an electronic or biometric sign-in system, which provides the information required by this Article 37.6.2; and

37.6.3 Individual Employee Information Notices: Distribute a notice, to each worker, laborer or mechanic employed under this **Contract**, in a form provided by the **Agency**, that this **Project** is a public work project on which each worker, laborer or mechanic is entitled to receive the prevailing rate of wages and supplements for the occupation at which he or she is working. If the total cost of the **Work** under this **Contract** is at least two hundred fifty thousand dollars, such notice shall also include a statement that, that each worker, laborer or mechanic be certified prior to performing any

Work as having successfully completed a course in construction safety and health approved by the United States department of labor's occupational safety and health administration that is at least ten hours in duration. Such notice shall be distributed to each worker before he or she starts performing any **Work** of this **Contract** and with the first paycheck after July first of each year. Worker, laborer or mechanic includes employees of the **Contractor** and all **Subcontractors** and all employees of suppliers entering the **Site**. At the time of distribution, the **Contractor** shall have each worker, laborer or mechanic sign a statement, in a form provided by the **Agency**, certifying that the worker has received the notice required by this article, which signed statement shall be maintained with the payroll records required by this **Contract**; and

37.6.3.1 The Contractor and each Subcontractor shall notify each worker, laborer or mechanic employed under this **Contract** in writing of the prevailing rate of wages for their particular job classification. Such notification shall be given to every worker, laborer and mechanic on their first pay stub and with every pay stub thereafter; and

37.6.4 **Site** Laminated Identification Badges: Provide laminated identification badges which indicate the worker's, laborer's or mechanic's name, trade, employer's name and employment starting date (month/day/year). Further, require as a condition of employment on the **Site**, that each and every worker, laborer or mechanic wear the laminated identification badge at all times and that it may be seen by any representative of the **City**; and

37.6.5 Language Other Than English Used On **Site**: Provide the **ACCO** notice when three (3) or more employees (worker and/or laborer and/or mechanic) on the **Site**, at any time, speak a language other than English. The **ACCO** will then provide the **Contractor** the notices in Article 37.6.1 in that language or languages as may be required. The **Contractor** is responsible for all distributions under Article 37; and

37.6.6 Provision of Records: The **Contractor** and **Subcontractor(s)** shall produce within five (5) **Days** on the **Site** of the **Work** and upon a written order of the **Engineer**, the **Commissioner**, the **ACCO**, the **Agency EAO**, or the **Comptroller**, such records as are required to be kept by this Article 37.6; and

37.6.7 If this **Contract** is for an amount greater than $1,000,000, checks issued by the **Contractor** to covered employees shall be generated by a payroll service or automated payroll system (an in-house system may be used if approved by the **Agency**). For any subcontract for an amount greater than $750,000, checks issued by a **Subcontractor** to covered employees shall be generated by a payroll service or automated payroll system (an in-house system may be used if approved by the **Agency**); and

37.6.8 The failure of the **Contractor** or **Subcontractor(s)** to comply with the provisions of Articles 37.6.1 through 37.6.7 may result in the **Commissioner** declaring the **Contractor** or **Subcontractor(s)** in default and/or the withholding of payments otherwise due under the **Contract.**

37.7 The **Contractor** and its **Subcontractors** shall keep such employment and payroll records as are required by Section 220 of the Labor **Law**.

37.8 At the time the **Contractor** makes application for each partial payment and for final payment, the **Contractor** shall submit to the **Commissioner** a written payroll certification, in the form provided by this **Contract**, of compliance with the prevailing wage, minimum wage and other provisions and stipulations required by Labor **Law** Section 220 and of compliance with the training requirements of Labor law section 220-h set forth in Article 35.2. This certification of compliance with the provisions of this article shall be a condition precedent to payment and no payment shall be made to the **Contractor** unless and until each such certification shall have been submitted to and received by the **Commissioner**.

37.9 This **Contract** is executed by the **Contractor** with the express warranty and representation that the **Contractor** is not disqualified under the provisions of Section 220 of the Labor Law for the award of the **Contract**.

37.10 Any breach or violation of any of the foregoing shall be deemed a breach or violation of a material provision of this **Contract**, and grounds for cancellation thereof by the **City**.

ARTICLE 38. PAYROLL REPORTS

38.1 The **Contractor** shall maintain on the **Site** the original payrolls or transcripts thereof which the **Contractor** and its **Subcontractor(s)** are required to maintain pursuant to Labor **Law** Section 220. The **Contractor** and **Subcontractor(s)** shall submit original payrolls or transcripts, subscribed and affirmed by it as true, with each and every payment requisition. The **Contractor and Subcontractor(s)** shall produce within five (5) **Days** on the **Site** of the **Work** and upon a written order of the **Engineer**, the **Commissioner**, the **ACCO**, the **Agency EAO**, or the **Comptroller**, such original payrolls or transcripts thereof, subscribed and affirmed by it as true, and the statements signed by each worker pursuant to this Chapter VIII. In addition, the **Contractor** and **Subcontractor(s)** shall furnish to the **Engineer** upon written demand any other information to satisfy the **Engineer** that this Chapter VIII and the Labor **Law**, as to the hours of employment and rates of wages, are being observed. The **Contractor** shall maintain the payrolls or transcripts thereof for six (6) years from the date of completion of the **Work** on this **Contract**.

38.2 When directed by the **Engineer**, the **Contractor** or **Subcontractor** shall provide the **Engineer** with an attendance sheet for each **Day** on which **Work** is performed on the **Site**. Such attendance sheet shall be in a form acceptable to the **Agency** and shall provide information for employees of the **Contractor** and **Subcontractor(s)**.

ARTICLE 39. DUST HAZARDS

39.1 Should a harmful dust hazard be created in performing the **Work** of this **Contract**, for the elimination of which appliances or methods have been approved by the Board of Standards and Appeals of the City of New York, such appliances and methods shall be installed, maintained, and effectively operated during the continuance of such harmful dust hazard. Failure to comply with this provision after notice shall make this **Contract** void.

CHAPTER IX
PARTIAL AND FINAL PAYMENTS

ARTICLE 40. CONTRACT PRICE

40.1 The **City** shall pay, and the **Contractor** agrees to accept, in full consideration for the **Contractor's** performance of the **Work** subject to the terms and conditions hereof, the lump sum price or unit prices which this **Contract** was awarded, plus the amount required to be paid for any **Extra Work** ordered by the **Commissioner** under Article 25, less credit for any **Work** omitted pursuant to Article 29.

ARTICLE 41. BID BREAKDOWN ON LUMP SUM

41.1 Within fifteen (15) **Days** after the commencement date specified in the Notice to Proceed, unless otherwise directed by the **Resident Engineer**, the **Contractor** shall submit to the **Resident Engineer** a breakdown of its bid price, or of lump sums bid for items of the **Contract**, showing the various operations to be performed

under the **Contract**, as directed in the progress schedule required under Article 9, and the value of each of such operations, the total of such items to equal the lump sum price bid. Said breakdown must be approved in writing by the **Resident Engineer**.

41.2 No partial payment will be approved until the **Contractor** submits a bid breakdown that is acceptable to the **Resident Engineer**.

41.3 The **Contractor** shall also submit such other information relating to the bid breakdown as directed by the **Resident Engineer**. Thereafter, the breakdown may be used only for checking the **Contractor's** applications for partial payments hereunder, but shall not be binding upon the **City**, the **Commissioner**, or the **Engineer** for any purpose whatsoever.

ARTICLE 42. PARTIAL PAYMENTS

42.1 From time to time as the **Work** progresses satisfactorily, but not more often than once a month, the **Contractor** may submit to the **Engineer** a requisition for a partial payment in the prescribed form, which shall contain an estimate of the quantity and the fair value of the **Work** done during the payment period.

42.2 Partial payments may be made for materials, fixtures and equipment in advance of their actual incorporation in the **Work**, as the **Commissioner** may approve, and upon the terms and conditions set forth in the General Conditions.

42.3 The **Contractor** shall also submit to the **Commissioner** in connection with every application for partial payment a verified statement in the form prescribed by the **Comptroller** setting forth the information required under Labor **Law** Section 220-a.

42.4 Within thirty (30) **Days** after receipt of such satisfactory payment application, the **Engineer** will prepare and certify, and the **Commissioner** will approve, a voucher for a partial payment in the amount of such approved estimate, less any and all deductions authorized to be made by the **Commissioner** under the terms of this **Contract** or by **Law**.

ARTICLE 43. PROMPT PAYMENT

43.1 The Prompt Payment provisions of the **PPB** Rules in effect at the time of the Bid will be applicable to payments made under this **Contract**. The provisions require the payment to **Contractor** of interest on payments made after the required payment date, except as set forth in the **PPB** Rules.

43.2 The **Contractor** shall submit a proper invoice to receive payment, except where the **Contract** provides that the **Contractor** will be paid at predetermined intervals without having to submit an invoice for each scheduled payment.

43.3 Determination of interest due will be made in accordance with the **PPB** Rules.

43.4 If the **Contractor** is paid interest, the proportionate share of that interest shall be forwarded by the **Contractor** to its **Subcontractor(s)**.

43.5 The **Contractor** shall pay each **Subcontractor** or **Materialman** not later than seven (7) **Days** after receipt of payment out of amounts paid to the **Contractor** by the **City** for **Work** performed by the **Subcontractor** or **Materialman** under this **Contract**.

43.5.1 If **Contractor** fails to make any payment to any **Subcontractor** or **Materialman** within seven (7) days after receipt of payment by the **City** pursuant to section 43.5 herein, then the **Contractor** shall pay interest on amounts due to such **Subcontractor** or **Materialman** at a rate of interest in effect on the date such payment is made by the **Contractor** computed in accordance with section 756-b (1)(b) of the NY General Business Law. Accrual of interest shall commence on the day immediately following the expiration of the seventh day following receipt of payment to the **Contractor** by the **City** and shall end on the date on which payment is made.

43.6 The **Contractor** shall include in each of its subcontracts a provision requiring each **Subcontractor** to make payment to each of its **Subcontractors** or suppliers for **Work** performed under this **Contract** in the same manner and within the same time period set forth above.

ARTICLE 44. SUBSTANTIAL COMPLETION PAYMENT

44.1 When the **Work** in the opinion of the **Commissioner**, has been substantially but not entirely completed, he/she shall issue a certificate of **Substantial Completion**.

44.2 The **Contractor** shall submit with the **Substantial Completion** requisition:

44.2.1 A Final Verified Statement of any and all alleged claims against the **City** and any pending dispute resolution procedures in accord with the **PPB** Rules and this **Contract**, in any way connected with or arising out of this **Contract** (including those as to which details may have been furnished pursuant to Articles 11, 27, 28, and 30) setting forth with respect to each such claim the total amount thereof, the various items of labor and materials included therein, and the alleged value of each item; and if the alleged claim be one for delay, the alleged cause of each such delay, the period or periods of time, giving the dates when the **Contractor** claims the performance of the **Work** or a particular part thereof was delayed, and an itemized statement and breakdown of the amount claimed for each such delay.

44.2.1(a) With respect to each such claim, the **Commissioner**, the **Comptroller** and, in the event of litigation, the Corporation Counsel of the **City** shall have the same right to inspect, and to make extracts or copies of, the **Contractor's** books, vouchers, records, etc., as is referred to in Articles 11, 27, 28, and 30. Nothing contained in this article is intended to or shall relieve the **Contractor** from the obligation of complying strictly with Articles 11, 27, 28, and 30. The **Contractor** is warned that unless such claims are completely set forth as herein required, the **Contractor** upon acceptance of the **Substantial Completion** payment pursuant to this article, will have waived any such claims.

44.2.2 A **Final Approved Punch List**.

44.2.3 Where required, a request for a substantial or final extension of time.

44.3 The **Commissioner** shall issue a voucher calling for payment of any part or all of the balance due for **Work** performed under the **Contract**, including monies retained under Article 21, less any and all deductions authorized to be made by the **Commissioner**, under this **Contract** or by **Law**, and less twice the amount the **Commissioner** considers necessary to ensure the completion of the balance of the **Work** by the **Contractor**. Such a payment shall be considered a Partial and not a Final Payment. No **Substantial Completion** payment shall be made under this article where the **Contractor** shall fail to complete the **Work** within the time fixed for such completion in the Schedule A of the General Conditions, or within the time to which completion may have been extended, until an extension or extensions of time for the completion of **Work** have been acted upon pursuant to Article 13.

44.4 No further partial payments shall be made to the **Contractor** after the **Commissioner** issues a Certificate of **Substantial Completion**, except the **Substantial Completion** payment and **Contractor's** requisition that were properly filed with the **Commissioner** prior to the date of **Substantial Completion**; however, the **Commissioner** may grant a waiver for further partial payments after the date of **Substantial Completion** to permit payments for change order **Work** and/or release of retainage and deposits pursuant to Articles 21 and 24. Such waiver shall be in writing.

44.5 The **Contractor** acknowledges that nothing contained in this article is intended to or shall in any way diminish the force and effect of Article 13.

ARTICLE 45. FINAL PAYMENT

45.1 After completion and **Final Acceptance** of the **Work**, the **Contractor** shall submit all required certificates and documents, together with a requisition for the balance claimed to be due under the **Contract**, less the amount authorized to be retained for maintenance under Article 24. A verified statement similar to that required in connection with applications for partial payments shall also be submitted to the **Commissioner**.

45.2 Amended Verified Statement of Claims: The **Contractor** shall also submit with the final requisition any amendments to the final verified statement of any and all alleged claims against the **City**, and any pending dispute resolution procedures in accord with the **PPB** Rules and this **Contract**, in any way connected with or arising out of this **Contract** (including those as to which details may have been furnished pursuant to Articles 11, 27, 28, and 30.) that have occurred subsequent to **Substantial Completion**, setting forth with respect to each such claim the total amount thereof, the various items of labor and materials included therein, and the alleged value of each such item; and if the alleged claim be one for delay, the alleged cause of each such delay, the period or periods of time, giving the dates when the **Contractor** claims the performance of the **Work** or a particular part thereof was delayed, and an itemized statement and breakdown of the amount claimed for each such delay. With reference to each such claim, the **Commissioner**, the **Comptroller** and, in the event of litigation, the Corporation Counsel of the **City** shall have the same right to inspect, and to make extracts or copies of, the **Contractor's** books, vouchers, records, etc., as is referred to in Articles 11, 27, 28, and 30. Nothing contained in this article, is entitled to or shall relieve the **Contractor** from the obligation of complying strictly with Articles 11, 27, 28, and 30. The **Contractor** is warned that unless such claims are completely set forth as herein required, the **Contractor**, upon acceptance of the Final Payment pursuant to Article 46, will have waived any such claims.

45.3 Preparation of Final Voucher: Upon determining the balance due hereunder other than on account of claims, the **Engineer** will prepare and certify, for the Commissioner's approval, a voucher for final payment in that amount less any and all deductions authorized to be made by the **Commissioner** under this **Contract** or by **Law**. In the case of a lump sum **Contract**, the **Commissioner** shall certify the voucher for final payment within thirty (30) **Days** from the date of completion and acceptance of the **Work**, provided all requests for extensions of time have been acted upon.

45.3.1 All prior certificates and vouchers upon which partial payments were made, being merely estimates made to enable the **Contractor** to prosecute the **Work** more advantageously, shall be subject to correction in the final voucher, and the certification of the **Engineer** thereon and the approval of the **Commissioner** thereof, shall be conditions precedent to the right of the **Contractor** to receive any money hereunder. Such final voucher shall be binding and conclusive upon the **Contractor**.

45.3.2 Payment pursuant to such final voucher, less any deductions authorized to be made by the **Commissioner** under this **Contract** or by **Law**, shall constitute the final payment, and shall be made by the **Comptroller** within thirty (30) **Days** after the filing of such voucher in his/her office.

45.4 The **Contractor** acknowledges that nothing contained in this article is intended to or shall in any way diminish the force and effect of Article 13.

ARTICLE 46. ACCEPTANCE OF FINAL PAYMENT

46.1 The acceptance by the **Contractor**, or by anyone claiming by or through it, of the final payment, whether such payment be made pursuant to any judgment of any Court, or otherwise, shall constitute and operate as a release to the **City** from any and all claims of and liability to the **Contractor** for anything heretofore done or furnished for the **Contractor** relating to or arising out of this **Contract** and the **Work** done hereunder, and for any prior act, neglect or default on the part of the **City** or any of its officers, agents or employees, excepting only a claim against the **City** for the amounts deducted or retained in accordance with the terms and provisions of this **Contract** or by **Law**, and excepting any claims, not otherwise waived, or any pending dispute resolution procedures which are contained in the verified statement filed with the **Contractor's** substantial and final requisitions pursuant to Articles 44 and 45.

46.2 The **Contractor** is warned that the execution by it of a release, in connection with the acceptance of the final payment, containing language purporting to reserve claims other than those herein specifically excepted from the operation of this article, or those for amounts deducted by the **Commissioner** from the final requisition or by the **Comptroller** from the final payment as certified by the **Engineer** and approved by the **Commissioner**, shall not be effective to reserve such claims, anything stated to the **Contractor** orally or in writing by any officer, agent or employee of the **City** to the contrary notwithstanding.

46.3 Should the **Contractor** refuse to accept the final payment as tendered by the **Comptroller**, it shall constitute a waiver of any right to interest thereon.

46.4 The **Contractor**, however, shall not be barred from commencing an action for breach of **Contract** under this provision to the extent permitted by **Law** and by the terms of the **Contract** provided that a detailed and verified statement of claim is served upon the contracting **Agency** and **Comptroller** not later than forty (40) **Days** after the mailing of such final payment. The statement shall specify the items upon which the claim will be based and any such claim shall be limited to such items.

ARTICLE 47. APPROVAL BY PUBLIC DESIGN COMMISSION

47.1 All works of art, including paintings, mural decorations, stained glass, statues, bas-reliefs and other sculptures, monuments, fountains, arches, and other structures of a permanent character intended for ornament or commemoration, and every design of the same to be used in the performance of this **Contract**, and the design of all bridges, approaches, buildings, gates, fences, lamps, or structures to be erected, pursuant to the terms of this **Contract**, shall be submitted to the Art Commission, d/b/a the Public Design Commission of the City of New York, and shall be approved by the Public Design Commission prior to the erection or placing in the position of the same. The final payment shall not become due or payable under this **Contract** unless and until the Public Design Commission shall certify that the design for the **Work** herein contracted for has been approved by the said Public Design Commission, and that the same has been executed in substantial accordance with the design so approved, pursuant to the provisions of Chapter 37, Section 854 of the **City** Charter, as amended.

CHAPTER X
CONTRACTOR'S DEFAULT

ARTICLE 48. COMMISSIONER'S RIGHT TO DECLARE CONTRACTOR IN DEFAULT

48.1 In addition to those instances specifically referred to in other Articles herein, the **Commissioner** shall have the right to declare the **Contractor** in default of this **Contract** if:

48.1.1 The **Contractor** fails to commence **Work** when notified to do so by the **Commissioner**; or if

48.1.2 The **Contractor** shall abandon the **Work**; or if

48.1.3 The **Contractor** shall refuse to proceed with the **Work** when and as directed by the **Commissioner**; or if

48.1.4 The **Contractor** shall, without just cause, reduce its working force to a number which, if maintained, would be insufficient, in the opinion of the **Commissioner**, to complete the **Work** in accordance with the Progress Schedule; or if

48.1.5 The **Contractor** shall fail or refuse to increase sufficiently such working force when ordered to do so by the **Commissioner**; or if

48.1.6 The **Contractor** shall sublet, assign, transfer, convert or otherwise dispose of this **Contract** other than as herein specified; or sell or assign a majority interest in the **Contractor**; or if

48.1.7 The **Contractor** fails to secure and maintain all required insurance; or if

48.1.8 A receiver or receivers are appointed to take charge of the **Contractor's** property or affairs; or if

48.1.9 The **Commissioner** shall be of the opinion that the **Contractor** is or has been unnecessarily or unreasonably or willfully delaying the performance and completion of the **Work**, or the award of necessary subcontracts, or the placing of necessary material and equipment orders; or if

48.1.10 The **Commissioner** shall be of the opinion that the **Contractor** is or has been willfully or in bad faith violating any of the provisions of this **Contract**; or if

48.1.11 The **Commissioner** shall be of the opinion that the **Work** cannot be completed within the time herein provided therefor or within the time to which such completion may have been extended; provided, however, that the impossibility of timely completion is, in the **Commissioner's** opinion, attributable to conditions within the **Contractor's** control; or if

48.1.12 The **Work** is not completed within the time herein provided therefor or within the time to which the **Contractor** may be entitled to have such completion extended; or if

48.1.13 Any statement or representation of the **Contractor** in the **Contract** or in any document submitted by the **Contractor** with respect to the **Work**, the **Project**, or the **Contract** (or for purposes of securing the **Contract**) was untrue or incorrect when made.

48.1.14 The **Contractor** or any of its officers, directors, partners, five (5%) percent shareholders, principals, or other persons substantially involved in its activities, commits any of the acts or omissions specified as the grounds for debarment in the **PPB** Rules.

48.2 Before the **Commissioner** shall exercise his/her right to declare the **Contractor** in default, the **Commissioner** shall give the **Contractor** an opportunity to be heard, upon not less than two (2) **Days** notice.

ARTICLE 49. EXERCISE OF THE RIGHT TO DECLARE DEFAULT

49.1 The right to declare in default for any of the grounds specified or referred to in Article 48 shall be exercised by sending the **Contractor** a notice, signed by the **Commissioner**, setting forth the ground or grounds upon which such default is declared (hereinafter referred to as a "Notice of Default").

49.2 The **Commissioner's** determination that the **Contractor** is in default shall be conclusive, final and binding on the parties and such a finding shall preclude the **Contractor** from commencing a plenary action for any damages relating to the **Contract**. If the **Contractor** protests the determination of the **Commissioner**, the **Contractor** may commence a lawsuit in a court of competent jurisdiction of the State of New York under Article 78 of the New York Civil Practice Law and Rules.

ARTICLE 50. QUITTING THE SITE

50.1 Upon receipt of such notice the **Contractor** shall immediately discontinue all further operations under this **Contract** and shall immediately quit the **Site**, leaving untouched all plant, materials, equipment, tools and supplies then on the **Site**.

ARTICLE 51. COMPLETION OF THE WORK

51.1 The **Commissioner**, after declaring the **Contractor** in default, may then have the **Work** completed by such means and in such manner, by **Contract** with or without public letting, or otherwise, as he/she may deem advisable, utilizing for such purpose such of the **Contractor's** plant, materials, equipment, tools and supplies remaining on the **Site**, and also such **Subcontractors**, as he/she may deem advisable.

51.2 After such completion, the **Commissioner** shall make a certificate stating the expense incurred in such completion, which shall include the cost of re-letting and also the total amount of liquidated damages (at the rate provided for in the **Contract**) from the date when the **Work** should have been completed by the **Contractor** in accordance with the terms hereof to the date of actual completion of the **Work**. Such certificate shall be binding and conclusive upon the **Contractor**, its Sureties, and any person claiming under the **Contractor**, as to the amount thereof.

51.3 The expense of such completion, including any and all related and incidental costs, as so certified by the **Commissioner**, and any liquidated damages assessed against the **Contractor**, shall be charged against and deducted out of monies which are earned by the **Contractor** prior to the date of default. Should the expense of such completion, as certified by the **Commissioner**, exceed the total sum which would have been payable under the **Contract** if it had been completed by the **Contractor**, any excess shall be paid by the **Contractor**.

ARTICLE 52. PARTIAL DEFAULT

52.1 In case the **Commissioner** shall declare the **Contractor** in default as to a part of the **Work** only, the **Contractor** shall discontinue such part, shall continue performing the remainder of the **Work** in strict conformity with the terms of this **Contract**, and shall in no way hinder or interfere with any **Other Contractor(s)** or persons whom the **Commissioner** may engage to complete the **Work** as to which the **Contractor** was declared in default.

52.2 The provisions of this Chapter relating to declaring the **Contractor** in default as to the entire **Work** shall be equally applicable to a declaration of partial default, except that the **Commissioner** shall be entitled to utilize for completion of the part of the **Work** as to which the **Contractor** was declared in default only such plant, materials, equipment, tools and supplies as had been previously used by the **Contractor** on such part.

ARTICLE 53. PERFORMANCE OF UNCOMPLETED WORK

53.1 In completing the whole or any part of the **Work** under the provision of this Chapter X, the **Commissioner** shall have the power to depart from or change or vary the terms and provisions of this **Contract**, provided, however, that such departure, change or variation is made for the purpose of reducing the time or expense of such completion. Such departure, change or variation, even to the extent of accepting a lesser or different performance, shall not affect the conclusiveness of the **Commissioner's** certificate of the cost of completion referred to in Article 51, nor shall it constitute a defense to an action to recover the amount by which such certificate exceeds the amount which would have been payable to the **Contractor** hereunder but for its default.

ARTICLE 54. OTHER REMEDIES

54.1 In addition to the right to declare the **Contractor** in default pursuant to this Chapter X, the **Commissioner** shall have the absolute right, in his/her sole discretion and without a hearing, to complete or cause to complete in the same manner as described in Articles 51 and 53, any or all unsatisfactory or uncompleted punch list **Work** that remains after the completion date specified in the Final Approved Punch List. A written notice of the exercise of this right shall be sent to the **Contractor** who shall immediately quit the **Site** in accordance with the provisions of Article 50.

54.2 The previous provisions of this Chapter X shall be in addition to any and all other legal or equitable remedies permissible in the premises.

54.3 The exercise by the **City** of any remedy set forth herein shall not be deemed a waiver by the **City** of any other legal or equitable remedy contained in this **Contract** or provided under **Law**.

54.4 The expense of such completion, including any and all related and incidental costs, as so certified by the **Commissioner**, shall be charged against and deducted out of monies which have been earned by the **Contractor** prior to the date of the exercise of the right set forth in Article 54.1; the balance of such monies, if any, subject to the other provisions of this **Contract**, to be paid to the **Contractor** without interest after such completion. Should the expense of such completion, as certified by the **Commissioner**, exceed the total sum which would have been payable under the **Contract** if it had been completed by the **Contractor**, any excess shall be paid by the **Contractor**.

CHAPTER XI
MISCELLANEOUS PROVISIONS

ARTICLE 55. CONTRACTOR'S WARRANTIES

55.1 In consideration of, and to induce, the award of this **Contract** to the **Contractor**, the **Contractor** represents and warrants:

55.1.1 That it is financially solvent, sufficiently experienced and competent to perform the **Work**; and

55.1.2 That the facts stated in its bid and the information given by it pursuant to the Information for Bidders is true and correct in all respects; and

55.1.3 That it has read and complied with all requirements set forth in the **Contract**.

ARTICLE 56. CLAIMS AND ACTIONS THEREON

56.1 Any claim, that is not subject to dispute resolution under the **PPB** Rules or this **Contract**, against the **City** for damages for breach of **Contract** shall not be made or asserted in any lawsuit, unless the **Contractor** shall have strictly complied with all requirements relating to the giving of notice and of information with respect to such claims, as herein before provided.

56.2 Nor shall any lawsuit be instituted or maintained on any such claims unless such lawsuit is commenced within six (6) months after the date the **Commissioner** issues a Certificate of **Substantial Completion** pursuant to Article 44; except that:

56.2.1 Any claims arising out of events occurring after the date the **Commissioner** issues a Certificate of **Substantial Completion** and before **Final Acceptance** of the **Work** shall be asserted within six (6) months of **Final Acceptance** of the **Work**;

56.2.2 Any claims for monies deducted, retained or withheld under the provisions of this **Contract** shall be asserted within six (6) months after the date when such monies becomes due and payable hereunder; and

56.2.3 If the **Commissioner** exercises his/her right to terminate the **Contract** pursuant to Article 64, any such lawsuit shall be commenced within six (6) months of the date the **Commissioner** exercises said right.

ARTICLE 57. INFRINGEMENT

57.1 The **Contractor** shall be solely responsible for and shall indemnify the **City** against any and all claims and judgments for damages for any infringement of copyright and patents or use of patented articles, tools, materials, equipment, appliances or processes in the performance or completion of the **Work**, including all costs and expenses which the **City** shall or may incur or be obligated to pay by reason thereof.

ARTICLE 58. NO CLAIM AGAINST OFFICERS, AGENTS OR EMPLOYEES

58.1 No claim whatsoever shall be made by the **Contractor** against any officer, agent or employee of the **City** for, or on account of, anything done or omitted to be done in connection with this **Contract**.

ARTICLE 59. SERVICES OF NOTICES

59.1 The **Contractor** hereby designates the business address specified in its bid, as the place where all notices, directions or other communications to the **Contractor** may be delivered, or to which they may be mailed. Actual delivery of any such notice, direction or communication to the aforesaid place, or depositing it in a postpaid wrapper addressed thereto in any post office box (P.O. Box) regularly maintained by the United States Postal Service, shall be conclusively deemed to be sufficient service thereof upon the **Contractor** as the date of such delivery or deposit.

59.2 Such address may be changed at any time by an instrument in writing, executed and acknowledged by the **Contractor**, and delivered to the **Commissioner**.

59.3 Nothing herein contained shall, however, be deemed to preclude or render inoperative the service of any notice, direction or other communication upon the **Contractor** personally, or, if the **Contractor** is a corporation, upon any officer thereof.

ARTICLE 60. UNLAWFUL PROVISIONS DEEMED STRICKEN FROM CONTRACT

60.1 If this **Contract** contains any unlawful provision not an essential part of the **Contract** and which shall not appear to have been a controlling or material inducement to the making thereof, the same shall be deemed of no effect and shall, upon notice by either party, be deemed stricken from the **Contract** without affecting the binding force of the remainder.

ARTICLE 61. ALL LEGAL PROVISIONS DEEMED INCLUDED

61.1 It is the intent and understanding of the parties to this **Contract** that each and every provision of **Law** required to be inserted in this **Contract** shall be and is inserted herein. Furthermore, it is hereby stipulated that every such provision is to be deemed to be inserted herein, and if, through mistake or otherwise, any such provision is not inserted, or is not inserted in correct form, then this **Contract** shall forthwith upon the application of either party be amended by such insertion so as to comply strictly with the **Law** and without prejudice to the rights of either party hereunder.

ARTICLE 62. TAX EXEMPTION

62.1 The **City** is exempt from payment of Federal, State, local taxes and Sales and Compensation Use Taxes of the State of New York and of cities and counties on all materials and supplies sold to the **City** pursuant to the provisions of this **Contract**. These taxes are not to be included in bids. However, this exemption does not apply to tools, machinery, equipment or other property leased by or to the **Contractor** or a **Subcontractor**, or to supplies and materials which even though they are consumed, are not incorporated into the completed **Work** (consumable supplies), and the **Contractor** and its **Subcontractors** shall be responsible for and pay any and all applicable taxes, including Sales and Compensation Use Taxes, on such leased tools, machinery, equipment or other property and upon all such unincorporated supplies and materials.

62.2 The **Contractor** agrees to sell and the **City** agrees to purchase all supplies and materials, other than consumable supplies, required, necessary or proper for or incidental to the construction of the **Project** covered by this **Contract**. The sum paid under this **Contract** for such supplies and materials shall be in full payment and consideration for the sale of such supplies and materials herein.

> 62.2.1 The **Contractor** agrees to construct the **Project** and to perform all **Work**, labor and services rendered, necessary, proper or incidental thereto for the sum shown in the bid for the performance of such **Work**, labor and services, and the sum so paid pursuant to this **Contract** for such **Work**, labor, etc., shall be in full consideration for the performance by the **Contractor** of all its duties and obligations under this **Contract** in connection with said **Work** and labor.

62.3 The purchase by the **Contractor** of the supplies and materials sold hereunder shall be a purchase or procurement for resale and therefore not subject to the New York State or **City** Sales or Compensation Use Taxes or any such taxes of cities or counties. The sale of such supplies and materials by the **Contractor** to the **City** is exempt from the aforesaid sales or compensating use taxes. With respect to such supplies and materials, the

Contractor, at the request of the **City**, shall furnish to the **City** such Bills of Sale and other instruments as may be required by the **City**, properly executed, acknowledged and delivered assuring to the **City** title to such supplies and materials, free of liens and/or encumbrances, and the **Contractor** shall mark or otherwise identify all such materials as the property of the **City**.

62.4 Title to all materials to be sold by the **Contractor** to the **City** pursuant to the provisions of the **Contract** shall immediately vest in and become the sole property of the **City** upon delivery of such supplies and materials to the **Site** and prior to its becoming a part of the permanent structure and/or construction. Notwithstanding such transfer of title, the **Contractor** shall have the full and continuing responsibility to install such materials and supplies in accordance with the provisions of this **Contract**, protect them, maintain them in a proper condition and forthwith repair, replace and make good any damage thereto, theft or disappearance thereof, and furnish additional materials in place of any that may be lost, stolen or rendered unusable, without cost to the **City**, until such time as the **Work** covered by the **Contract** is fully accepted by the **City**. Such transfer of title shall in no way affect any of the **Contractor's** obligations hereunder. In the event that, after title has passed to the **City**, any of such supplies and materials are rejected as being defective or otherwise unsatisfactory, title to all such supplies and materials shall be deemed to have been transferred back to the **Contractor**.

62.5 The purchase by **Subcontractors** of supplies and materials to be sold hereunder shall also be a purchase or procurement for resale to the **Contractor** (either directly or through other **Subcontractors**) and therefore not subject to the aforesaid Sales or Compensation Use Taxes, provided that the subcontract agreements provide for the resale of such supplies and materials prior to and separate and apart from the incorporation of such supplies and materials into the permanent structure and/or construction and that such subcontract agreements are in a form similar to this **Contract** with respect to the separation of the sale of materials from the **Work** and labor, services, consumable supplies and any other matters to be provided, and provided further that the subcontract agreements provide separate prices for materials and all other services and matters. Such separation shall actually be followed in practice, including the separation of payments for supplies and materials from the payments for other **Work** and labor and other things to be provided.

62.6 The **Contractor** and its **Subcontractors** and Materialmen shall obtain any and all necessary **Contractor** Exempt Purchase Certificates or Resale Certificates from the appropriate governmental **Agency** or **Agencies**, and furnish a **Contractor** Exempt Purchase Certificate or Resale Certificate to all persons, firms or corporations from which they purchase supplies and materials for the performance of the **Work** covered by this **Contract**.

62.7 In the event any of the provisions of this article shall be deemed to be in conflict with any other provisions of this **Contract** or create any ambiguity, then the provisions of this article shall control.

ARTICLE 63. INVESTIGATION(S) CLAUSE

63.1 The parties to this **Contract** agree to cooperate fully and faithfully with any investigation, audit or inquiry conducted by a United States, a State of New York (State) or a **City** governmental **Agency** or authority that is empowered directly or by designation to compel the attendance of witnesses and to examine witnesses under oath, or conducted by the Inspector General of a governmental **Agency** that is a party in interest to the transaction, submitted bid, submitted proposal, **Contract**, lease, permit or license that is the subject of the investigation, audit or inquiry.

63.2 If any person who has been advised that his/her statement, and any information from such statement, will not be used against him/her in any subsequent criminal proceeding refuses to testify before a grand jury or other governmental **Agency** or authority empowered directly or by designation to compel the attendance of witnesses and to examine witnesses under oath concerning the award of or performance under any transaction, agreement, lease, permit, **Contract**, or license entered into with the **City**, the State, or any political subdivision or

public authority thereof, or the Port Authority of New York and New Jersey, or any local development corporation within the **City**, or any public benefit corporation organized under the **Laws** of the State of New York, or;

63.3 If any person refuses to testify for a reason other than the assertion of his/her privilege against self incrimination in an investigation, audit or inquiry conducted by a **City** or State governmental **Agency** or authority empowered directly or by designation to compel the attendance of witnesses and to take testimony under oath, or by the Inspector General of the governmental **Agency** that is a party in interest in, and is seeking testimony concerning the award of, or performance under any transaction, agreement, lease, permit, **Contract**, or license entered into with the **City**, the State, or any political subdivision thereof or any local development corporation within the **City**, then;

63.4 The **Commissioner** whose **Agency** is a party in interest to the transaction, submitted bid, submitted proposal, **Contract**, lease, permit, or license shall convene a hearing, upon not less than five (5) days written notice to the parties involved to determine if any penalties should attach for the failure of a person to testify.

63.5 If any non-governmental party to the hearing requests an adjournment, the **Commissioner** who convened the hearing may, upon granting the adjournment, suspend any **Contract**, lease, permit, or license, pending the final determination pursuant to Article 63.7 without the **City** incurring any penalty or damages for delay or otherwise.

63.6 The penalties which may attach after a final determination by the **Commissioner** may include but shall not exceed:

63.6.1 The disqualification for a period not to exceed five (5) years from the date of an adverse determination for any person, or any entity of which such person was a member at the time the testimony was sought, from submitting bids for, or transacting business with, or entering into or obtaining any **Contract**, lease, permit or license with or from the **City**; and/or

63.6.2 The cancellation or termination of any and all such existing **City Contracts**, leases, permits or licenses that the refusal to testify concerns and that have not been assigned as permitted under this **Agreement**, nor the proceeds of which pledged, to an unaffiliated and unrelated institutional lender for fair value prior to the issuance of the notice scheduling the hearing, without the **City** incurring any penalty or damages on account of such cancellation or termination; monies lawfully due for goods delivered, **Work** done, rentals, or fees accrued prior to the cancellation or termination shall be paid by the **City**.

63.7 The **Commissioner** shall consider and address in reaching his/her determination and in assessing an appropriate penalty the factors in Articles 63.7.1 and 63.7.2. The **Commissioner** may also consider, if relevant and appropriate, the criteria established in Articles 63.7.3 and 63.7.4, in addition to any other information which may be relevant and appropriate:

63.7.1 The party's good faith endeavors or lack thereof to cooperate fully and faithfully with any governmental investigation or audit, including but not limited to the discipline, discharge, or disassociation of any person failing to testify, the production of accurate and complete books and records, and the forthcoming testimony of all other members, agents, assignees or fiduciaries whose testimony is sought.

63.7.2 The relationship of the person who refused to testify to any entity that is a party to the hearing, including but not limited to, whether the person whose testimony is sought has an ownership interest in the entity and/or the degree of authority and responsibility the person has within the entity.

63.7.3 The nexus of the testimony sought to the subject entity and its **Contracts**, leases, permits or licenses with the **City**.

63.7.4 The effect a penalty may have on an unaffiliated and unrelated party or entity that has a significant interest in an entity subject to penalties under Article 63.6, provided that the party or entity has given actual notice to the **Commissioner** upon the acquisition of the interest, or at the hearing called for in Article 63.4, gives notice and proves that such interest was previously acquired. Under either circumstance the party or entity shall present evidence at the hearing demonstrating the potential adverse impact a penalty will have on such person or entity.

63.8 Definitions:

63.8.1 The term "license" or "permit" as used herein shall be defined as a license, permit, franchise or concession not granted as a matter of right.

63.8.2 The term "person" as used herein shall be defined as any natural person doing business alone or associated with another person or entity as a partner, director, officer, principal or employee.

63.8.3 The term "entity" as used herein shall be defined as any firm, partnership, corporation, association, joint venture, or person that receives monies, benefits, licenses, leases, or permits from or through the **City** or otherwise transacts business with the **City**.

63.8.4 The term "member" as used herein shall be defined as any person associated with another person or entity as a partner, director, officer, principal or employee.

63.9 In addition to and notwithstanding any other provision of this **Contract**, the **Commissioner** may in his/her sole discretion terminate this **Contract** upon not less than three (3) **Days** written notice in the event the **Contractor** fails to promptly report in writing to the **Commissioner** of the Department of Investigations ("DOI") of the **City** any solicitation of money, goods, requests for future employment or other benefit or thing of value, by or on behalf of any employee of the **City** or other person, firm, corporation or entity for any purpose which may be related to the procurement or obtaining of this **Contract** by the **Contractor**, or affecting the performance of this **Contract**.

ARTICLE 64. TERMINATION BY THE CITY

64.1 In addition to termination pursuant to any other article of this **Contract**, the **Commissioner** may, at any time, terminate this **Contract** by written notice to the **Contractor**. In the event of termination, the **Contractor** shall, upon receipt of such notice, unless otherwise directed by the **Commissioner**:

64.1.1 Stop **Work** on the date specified in the notice;

64.1.2 Take such action as may be necessary for the protection and preservation of the **City's** materials and property;

64.1.3 Cancel all cancelable orders for material and equipment;

64.1.4 Assign to the **City** and deliver to the **Site** or another location designated by the **Commissioner**, any non-cancelable orders for material and equipment that is not capable of use except in the performance of this **Contract** and has been specifically fabricated for the sole purpose of this **Contract** and not incorporated in the **Work**;

64.1.5 Take no action which will increase the amounts payable by the **City** under this **Contract**.

64.2 In the event of termination by the **City** pursuant to this article, payment to the **Contractor** shall be in accordance with Articles 64.2.1, 64.2.2 or 64.2.3, to the extent that each respective article applies.

64.2.1 Lump Sum Contracts or Items: On all lump sum **Contracts**, or on lump sum items in a **Contract**, the **City** will pay the **Contractor** the sum of Articles 64.2.1(a) and 64.2.1(b), less all payments previously made pursuant to this **Contract**. On lump sum **Contracts** only, the **City** will also pay the **Contractor** an additional sum as provided in 64.2.1(c).

64.2.1(a) For **Work** completed prior to the notice of termination, the **Contractor** shall be paid a pro rata portion of the lump sum bid amount, plus approved change orders, based upon the percent completion of the **Work**, as determined by the **Commissioner**. For the purpose of determining the pro rata portion of the lump sum bid amount to which the **Contractor** is entitled, the Bid Breakdown submitted in accordance with Article 41 shall be considered, but shall not be dispositive. The **Commissioner's** determination hereunder shall be final, binding and conclusive.

64.2.1(b) For non-cancelable material and equipment, less salvage value, that is not capable of use except in the performance of this **Contract** and has been specifically fabricated for the sole purpose of this **Contract**, but not yet incorporated in the **Work**, the **Contractor** shall be paid the lesser of:

64.2.1(b)(i) The direct cost, as defined in Article 64.2.4; or

64.2.1(b)(ii) The fair and reasonable value, whichever is less, of such material and equipment, plus necessary and reasonable delivery costs.

64.2.1(b)(iii) In addition, the **Contractor** shall be paid five (5%) percent of Article 64.2.1(b)(i) or Article 64.2.1(b)(ii), whichever applies.

64.2.1(c) Except as otherwise provided in Article 64.2.1(d), on all lump sum **Contracts**, the **Contractor** shall be paid the percentage indicated below applied to the difference between the total lump sum bid amount and the total of all payments made prior to the notice of termination plus all payments allowed pursuant to Articles 64.2.1(a) and 64.2.1(b):

64.2.1(c)(i) Five (5%) percent of the first five million ($5,000,000.) dollars; and

64.2.1(c)(ii) Three (3%) percent of any amount between five million ($5,000,000.) dollars and fifteen million ($15,000,000.) dollars; plus

64.2.1(c)(iii) One (1%) percent of any amount over fifteen million ($15,000,000.) dollars.

64.2.1(d) In the event the City terminates a lump sum **Contract** pursuant to this article within ninety (90) days after registration of the **Contract** with the **Comptroller**, the **Contractor** shall be paid one (1%) percent of the difference between the lump sum bid amount and the total of all payments made pursuant to this article.

64.2.2 Unit Price Contracts or Items: On all unit price **Contracts**, or on unit price items in a **Contract**, the **City** will pay the **Contractor** the sum of Articles 64.2.2(a) and 64.2.2(b), less all payments previously made pursuant to this **Contract**:

64.2.2(a) For all completed units, the unit price stated in the **Contract**, and

64.2.2(b) For units that have been ordered but are only partially completed, the **Contractor** will be paid:

64.2.2(b)(i) A pro rata portion of the unit price stated in the **Contract** based upon the percent completion of the unit and

64.2.2(b)(ii) For non-cancelable material and equipment, payment will be made pursuant to Article 64.2.1(b).

64.2.3 Time and Material Contracts or Items: On all **Contracts** or items in a **Contract** where time and material records are specified as the basis for payment of the **Work**, the **Contractor** shall be paid in accordance with Article 26, less all payments previously made pursuant to this **Contract**.

64.2.4 Direct Costs: Direct Costs as used in this article shall mean:

64.2.4(a) The actual purchase price of material and equipment, plus necessary and reasonable delivery costs,

64.2.4(b) The actual cost of labor involved in construction and installation at the **Site**, and

64.2.4(c) The actual cost of necessary bonds and insurance purchased pursuant to requirements of this **Contract** less any amounts that have been or should be refunded by the **Contractor's** sureties or insurance carriers.

64.2.4(d) Direct Cost shall not include overhead.

64.3 In no event shall any payments under this article exceed the **Contract** price for such items.

64.4 All payments pursuant to this article shall be in the nature of liquidated damages and shall be accepted by the **Contractor** in full satisfaction of all claims against the **City**.

64.5 The **City** may deduct or set off against any sums due and payable pursuant to this article, any deductions authorized by this **Contract** or by **Law** (including but not limited to liquidated damages) and any claims it may have against the **Contractor**. The **City's** exercise of the right to terminate the **Contract** pursuant to this article shall not impair or otherwise effect the **City's** right to assert any claims it may have against the **Contractor** in a plenary action.

64.6 Where the **Work** covered by the **Contract** has been substantially completed, as determined in writing by the **Commissioner**, termination of the **Work** shall be handled as an omission of **Work** pursuant to Articles 29 and 33, in which case a Change Order will be issued to reflect an appropriate reduction in the **Contract** Sum, or if the amount is determined after final payment, such amount shall be paid by the **Contractor**.

ARTICLE 65. CHOICE OF LAW, CONSENT TO JURISDICTION AND VENUE

65.1 This **Contract** shall be deemed to be executed in the **City** of New York, State of New York, regardless of the domicile of the **Contractor**, and shall be governed by and construed in accordance with the **Laws** of the State of New York and the **Laws** of the United States, where applicable.

65.2 The parties agree that any and all claims asserted against the **City** arising under this **Contract** or related thereto shall be heard and determined in the courts of the State of New York ("New York State Courts") located in the **City** and County of New York. To effect this **Contract** and intent, the **Contractor** agrees:

65.2.1 If the **City** initiates any action against the **Contractor** in Federal Court or in New York State Court, service of process may be made on the **Contractor** either in person, wherever such **Contractor** may be found, or by registered mail addressed to the **Contractor** at its address as set forth in this **Contract**, or to such other address as the **Contractor** may provide to the **City** in writing; and

65.2.2 With respect to any action between the **City** and the **Contractor** in New York State Court, the **Contractor** hereby expressly waives and relinquishes any rights it might otherwise have:

65.2.2(a) To move to dismiss on grounds of forum non conveniens;

65.2.2(b) To remove to Federal Court; and

65.2.2(c) To move for a change of venue to a New York State Court outside New York County.

65.2.3 With respect to any action brought by the **City** against the **Contractor** in Federal Court located in the **City**, the **Contractor** expressly waives and relinquishes any right it might otherwise have to move to transfer the action to a United States Court outside the **City**.

65.2.4 If the **Contractor** commences any action against the **City** in a Court located other than in the **City** and State of New York, upon request of the **City**, the **Contractor** shall either consent to a transfer of the action to a State Court of competent jurisdiction located in the **City** and State of New York or, if the Court where the action is initially brought will not or cannot transfer the action, the **Contractor** shall consent to dismiss such action without prejudice and may thereafter reinstate the action in a State Court of competent jurisdiction in the **City**.

65.3 If any provision(s) of this article is held unenforceable for any reason, each and all other provision(s) shall nevertheless remain in full force and effect.

ARTICLE 66. PARTICIPATION IN AN INTERNATIONAL BOYCOTT

66.1 The **Contractor** agrees that neither the **Contractor** nor any substantially owned affiliated company is participating or shall participate in an international boycott in violation of the provisions of the Export Administration Act of 1979, as amended, or the regulations of the United States Department of Commerce promulgated thereunder.

66.2 Upon the final determination by the Commerce Department or any other **Agency** of the United States as to, or conviction of the **Contractor** or a substantially-owned affiliated company thereof, participation in an international boycott in violation of the provisions of the Export Administration Act of 1979, as amended, or the regulations promulgated thereunder, the **Comptroller** may, at his/her option, render forfeit and void this **Contract**.

66.3 The **Contractor** shall comply in all respects, with the provisions of Section 6-114 of the Administrative Code and the rules and regulations issued by the **Comptroller** thereunder.

ARTICLE 67. LOCALLY BASED ENTERPRISE PROGRAM

67.1 This **Contract** is subject to the requirements of Section 6-108.1 of the Administrative Code and regulations promulgated thereunder. No construction **Contract** shall be awarded unless and until these requirements have been complied with in their entirety.

67.2 Unless specifically waived by the **Commissioner** with the approval of the Division of Economic and Financial Opportunity of the Department of Business Services, if any portion of the **Contract** is subcontracted, not less than ten (10%) percent of the total dollar amount of the **Contract** shall be awarded to locally based enterprise ("LBEs"); except that where less than ten (10%) percent of the total dollar amount of the **Contract** is subcontracted, such lesser percentage shall be so awarded.

67.3 The prime **Contractor** shall not require performance and payment bonds from LBE **Subcontractors**.

67.4 If the **Contractor** has indicated prior to award that no **Work** will be subcontracted, no **Work** shall be subcontracted without the prior approval of the **Commissioner**, which shall be granted only if the **Contractor** makes a good faith effort beginning at least six (6) weeks before the **Work** is to be performed to obtain LBE **Subcontractors** to perform the **Work**.

67.5 If the **Contractor** has not identified sufficient LBE **Subcontractors** prior to award, it shall sign a letter of compliance stating that it complies with Section 6-108.1 of the Administrative Code, recognizes that achieving the LBE requirement is a condition of its **Contract**, and shall submit documentation demonstrating its good faith efforts to obtain LBEs. After award, the **Contractor** shall begin to solicit LBE's to perform subcontracted **Work** at least six (6) weeks before the date such **Work** is to be performed and shall demonstrate that a good faith effort has been made to obtain LBE's on each subcontract until it meets the required percentage.

67.6 Failure of the **Contractor** to comply with the requirements of Section 6-108.1 of the Administrative Code and the regulations promulgated thereunder shall constitute a material breach of **Contract**. Remedy for such breach of **Contract** may include the imposition of any or all of the following sanctions:

67.6.1 Reducing a **Contractor's** compensation by an amount equal to the dollar value of the percentage of the LBE subcontracting requirement not complied with;

67.6.2 Declaring the **Contractor** in default;

67.6.3 Where non-compliance is by an LBE, de-certifying and declaring the LBE ineligible to participate in the LBE program for a period of up to three (3) years.

ARTICLE 68. ANTITRUST

68.1 The **Contractor** hereby assigns, sells and transfers to the **City** all right, title and interest in and to any claims and causes of action arising under the antitrust **Laws** of New York State or of the United States relating to the particular goods or services purchased or procured by the **City** under this **Contract**.

ARTICLE 69. MacBRIDE PRINCIPLES PROVISIONS

69.1 Notice To All Prospective **Contractors**:

69.1.1 Local Law No. 34 of 1991 became effective on September 10, 1991 and added Section 6-115.1 of the Administrative Code. The local **Law** provides for certain restrictions on **City Contracts** to express the opposition of the people of the **City** to employment discrimination practices in Northern Ireland to promote freedom of work-place opportunity.

69.1.2 Pursuant to Section 6-115.1, prospective **Contractors** for **Contracts** to provide goods or services involving an expenditure of an amount greater than ten thousand ($10,000.) dollars, or for construction involving an amount greater than fifteen thousand ($15,000.) dollars, are asked to sign a rider in which they covenant and represent, as a material condition of their **Contract**, that any business operations in Northern Ireland conducted by the **Contractor** and any individual or legal entity in which the **Contractor** holds a ten (10%) percent or greater ownership interest in the **Contractor** will be conducted in accordance with the MacBride Principles of nondiscrimination in employment.

69.1.3 Prospective **Contractors** are not required to agree to these conditions. However, in the case of **Contracts** let by competitive sealed bidding, whenever the lowest responsible bidder has not agreed to stipulate to the conditions set forth in this notice and another bidder who has agreed to stipulate to such conditions has submitted a bid within five (5%) percent of the lowest responsible bid for a **Contract** to supply goods, services or contraction of comparable quality, the **Agency** shall refer such bids to the Mayor, the Speaker or other officials, as appropriate, who may determine, in accordance with applicable **Law** and rules, that it is in the best interest of the **City** that the **Contract** be awarded to other than the lowest responsible pursuant to Section 313(b)(2) of the **City** Charter.

69.1.4 In the case of **Contracts** let by other than competitive sealed bidding, if a prospective **Contractor** does not agree to these conditions, no **Agency**, elected official or the **City** Council shall award the **Contract** to that bidder unless the **Agency** seeking to use the goods, services or construction certifies in writing that the **Contract** is necessary for the **Agency** to perform its functions and there is no other responsible **Contractor** who will supply goods, services or construction of comparable quality at a comparable price.

69.2 In accordance with Section 6-115.1 of the Administrative Code, the **Contractor** stipulates that such **Contractor** and any individual or legal entity in which the **Contractor** holds a ten (10%) percent or greater ownership interest in the **Contractor** either:

69.2.1 Have no business operations in Northern Ireland, or

69.2.2 Shall take lawful steps in good faith to conduct any business operations they have in Northern Ireland in accordance with the MacBride Principles, and shall permit independent monitoring of their compliance with such principles.

69.3 For purposes of this Article, the following terms shall have the following meanings:

69.3.1 "MacBride Principles" shall mean those principles relating to nondiscrimination in employment and freedom of work-place opportunity which require employers doing business in Northern Ireland to:

69.3.1(a) increase the representation of individuals from under-represented religious groups in the workforce, including managerial, supervisory, administrative, clerical and technical jobs;

69.3.1(b) take steps to promote adequate security for the protection of employees from under-represented religious groups both at the work-place and while traveling to and from **Work**;

69.3.1(c) ban provocative religious or political emblems from the workplace;

69.3.1(d) publicly advertise all job openings and make special recruitment efforts to attract applicants from under-represented religious groups;

69.3.1(e) establish layoff, recall and termination procedures which do not in practice favor a particular religious group;

69.3.1(f) abolish all job reservations, apprenticeship restrictions and different employment criteria which discriminate on the basis of religion;

69.3.1(g) develop training programs that will prepare substantial numbers of current employees from under-represented religious groups for skilled jobs, including the expansion of existing programs and the creation of new programs to train, upgrade and improve the skills of workers from under-represented religious groups;

69.3.1(h) establish procedures to asses, identify and actively recruit employees from under-represented religious groups with potential for further advancement; and

69.3.1(i) appoint a senior management staff member to oversee affirmative action efforts and develop a timetable to ensure their full implementation.

69.4 The **Contractor** agrees that the covenants and representations in Article 69.2 are material conditions to this **Contract**. In the event the **Agency** receives information that the **Contractor** who made the stipulation required by this Article is in violation thereof, the **Agency** shall review such information and give the **Contractor** an opportunity to respond. If the **Agency** finds that a violation has occurred, the **Agency** shall have the right to declare the **Contractor** in default in default and/or terminate this **Contract** for cause and procure supplies, services or **Work** from another source in the manner the **Agency** deems proper. In the event of such termination, the **Contractor** shall pay to the **Agency**, or the **Agency** in its sole discretion may withhold from any amounts otherwise payable to the **Contractor**, the difference between the **Contract** price for the uncompleted portion of this **Contract** and the cost to the **Agency** of completing performance of this **Contract** either itself or by engaging another Contractor or Contractors. In the case of a requirement **Contract**, the **Contractor** shall be liable for such difference in price for the entire amount of supplies required by the **Agency** for the uncompleted term of **Contractor's Contract**. In the case of a construction **Contract**, the **Agency** shall also have the right to hold the **Contractor** in partial or total default in accordance with the default provisions of this **Contract**, and/or may seek debarment or suspension of the **Contractor**. The rights and remedies of the **Agency** hereunder shall be in addition to, and not in lieu of, any rights and remedies the **Agency** has pursuant to this **Contract** or by operation of **Law**.

ARTICLE 70. HEALTH INSURANCE COVERAGE

70.1 If the price for which this **Contract** was awarded exceeds $100,000, or if the price for which this **Contract** was awarded when combined with other construction or services contracts awarded the **Contractor** by the **City** in the year prior to award of this **Contract** exceeds $100,000, the **Contractor,** following registration of the **Contract**, shall be required to submit responses to requests for information regarding the nature of any health

insurance provided by the Contractor to its employees and their spouses and domestic partners, upon request of the **Agency** or other designated **City** agency.

ARTICLE 71. PROHIBITION OF TROPICAL HARDWOODS

71.1 Tropical hardwoods, as defined in Section 165 of the New York State Finance **Law** ("Finance **Law**"), shall not be utilized in the performance of this **Contract** except as expressly permitted by Section 165 of the Finance **Law**.

ARTICLE 72. CONFLICTS OF INTEREST

72.1 Section 2604 of the **City** Charter and other related provisions of the **City** Charter, the Administrative Code and the Penal **Law** are applicable under the terms of this **Contract** in relation to Conflicts of Interest and shall be extended to **Subcontractors** authorized to perform **Work**, labor and services pursuant to this **Contract** and further, it shall be the duty and responsibility of the **Contractor** to so inform its respective **Subcontractors**. Notice is hereby given that, under certain circumstances, penalties may be invoked against the donor as well as the recipient of any form of valuable gift.

ARTICLE 73. MERGER CLAUSE

73.1 The Written **Contract** herein, contains all the terms and conditions agreed upon by the parties hereto, and no other agreement, oral or otherwise, regarding the subject matter of this **Contract** shall be deemed to exist or to bind any of the parties hereto, or to vary any of the terms contained herein.

ARTICLE 74. STATEMENT OF WORK

74.1 The **Contractor** shall furnish all labor and materials and perform all **Work** in strict accordance with the **Specifications** and **Addenda** thereto, numbered 7.

ARTICLE 75. COMPENSATION TO BE PAID TO CONTRACTOR

75.1 The **City** will pay and the **Contractor** will accept in full consideration for the performance of the **Contract**, subject to additions and deductions as provided herein, the total sum of: Three Million two hundred Eighty thousand, twenty nine dollars 00/100. Dollars, ($3,280,029.00), this said sum being the Amount at which the **Contract** was awarded to the **Contractor** at a public letting thereof, based upon the **Contractor's** bid for the **Contract**.

ARTICLE 76. ELECTRONIC FUNDS TRANSFER

76.1 In accordance with Section 6-107.1 of the New York City Administrative Code, the Contractor agrees to accept payments under this Agreement from the City by electronic funds transfer. An electronic funds transfer is any transfer of funds, other than a transaction originated by check, draft or similar paper instrument, which is initiated through an electronic terminal, telephonic instrument or computer or magnetic tape so as to order, instruct or authorize a financial institution to debit or credit an account. Prior to the first payment made under this Agreement, Contractor shall designate one financial institution or other authorized payment agent and shall complete the "EFT Vendor Payment Enrollment Form" (available at http://www.nyc.gov/dof) in order to provide the Commissioner of Finance with information necessary for Contractor to receive electronic funds transfer payments through the designated financial institution or authorized payment agent. The crediting of the amount of a

payment to the appropriate account on the books of a financial institution or other authorized payment agent designated by the Contractor shall constitute full satisfaction by the City for the amount of the payment under this agreement. The account information supplied by the Contractor to facilitate the electronic funds transfer shall remain confidential to the fullest extent provided by law.

76.2 The agency head may waive the application of the requirements herein to payments on contracts entered into pursuant to §315 of the City Charter. In addition, the Commissioner of the Department of Finance and the Comptroller may jointly issue standards pursuant to which the contracting agency may waive the requirements hereunder for payments in the following circumstances: (i) for individuals or classes of individuals for whom compliance imposes a hardship; (ii) for classifications or types of checks; or (iii) in other circumstances as may be necessary in the interest of the City.

ARTICLE 77 – PARTICIPATION BY MINORITY-OWNED AND WOMEN-OWNED BUSINESS ENTERPRISES IN CITY PROCUREMENT

NOTICE TO ALL PROSPECTIVE CONTRACTORS

ARTICLE I. M/WBE PROGRAM

Local Law No. 129 of 2005 added Section 6-129 to the Administrative Code of the City of New York. The local law creates a program for participation by minority-owned and women-owned business enterprises (MBEs and WBEs) in City procurement. As stated in the Section 6-129, the intent of the program is to address the impact of discrimination on the City's procurement process, and to promote the public interest in avoiding fraud and favoritism in the procurement process, increasing competition for City business, and lowering contract costs. The contract provisions contained herein are made pursuant to Local Law 129, and the rules of the Department of Small Business Services ("DSBS") promulgated thereunder.

If this Contract is subject to the Minority-Owned and Women-Owned Business Enterprise ("M/WBE") program created by Local Law 129, the specific requirements of M/WBE participation for this Contract are set forth in Schedule B of the Contract (entitled the "Subcontractor Utilization Plan"), and are detailed below. The Contractor must comply with all applicable M/WBE requirements for this Contract. Schedule B of the Contract ("Subcontractor Utilization Plan") is included in the Bid Booklet.

Article I, Part A, below, sets forth provisions related to the participation goals for construction and professional services contracts. Article I, Part B, below, sets forth miscellaneous provisions related to the M/WBE program.

PART A: PARTICIPATION GOALS FOR CONSTRUCTION AND PROFESSIONAL SERVICES CONTRACTS

1. The Target Subcontracting Percentage applicable to this Contract is set forth on Schedule B, Part I to this Contract (see Page 1, line (1)). The "Target Subcontracting Percentage" is the percentage of the total Contract which Agency anticipates that the prime contractor for this Contract would in the normal course of business award to one or more subcontractors for amounts under $1 million for construction and professional services.

A prospective contractor may seek a full or partial pre-award waiver of the **Target Subcontracting Percentage** in accordance with Local Law 129 and Part A, Section 10 below. To apply for the a full or partial waiver of the **Target Subcontracting Percentage**, a prospective contractor must complete Part III (Page 4) of Schedule B, and must submit such request no later than seven (7) days prior to the date and time the bids or proposals are due, in writing to the Agency by e-mail at poped@ddc.nyc.gov or via facsimile at (718) 391-1885. Bidders/proposers who have submitted requests will receive a response by no later than two (2) calendar days prior to the date bids or proposals are due, provided, however, that if that date would fall on a weekend or holiday, a response will be provided by close-of-business on the business day before such weekend or holiday date.

2. The **Subcontractor Participation Goals** established for this Contract are set forth on Schedule B, Part I to this Contract (see Page 1, line (2) and/or line (3)). The **Subcontractor Participation Goals** represent a percentage of the total dollar value of all construction and/or professional services subcontracts under this Agreement for amounts under $1 million.

3. If **Subcontractor Participation Goals** have been established for this Contract, Contractor agrees or shall agree as a material term of the Agreement that, with respect to the total amount of the Agreement to be awarded to one or more subcontractors pursuant to subcontracts for amounts under $1 million, Contractor shall be subject to the **Subcontractor Participation Goals**, unless the goals are modified by Agency in accordance with Local Law 129 and Part A, Section 11 below.

4. If **Subcontractor Participation Goals** have been established for this Contract, a prospective contractor shall be required to submit with its bid or proposal, as applicable, a completed Schedule B, Part II Subcontractor Utilization Plan (see Page 2-3) indicating: (a) the percentage of work it intends to subcontract; (b) the percentage of work it intends to award to subcontractors for amounts under $1 million; (c) in cases where the prospective contractor intends to award subcontracts for amounts under $1 million, a description of the type and dollar value of work designated for participation by MBEs and/or WBEs; and (d) the general time frames in which such work by MBEs and/or WBEs is scheduled to occur. In the event that this Subcontractor Utilization Plan indicates that the bidder or proposer, as applicable, does not intend to award the **Target Subcontracting Percentage**, the bid or proposal, as applicable, shall be deemed non-responsive, unless Agency has granted the bidder or proposer, as applicable, a pre-award waiver of the **Target Subcontracting Percentage** in accordance with Local Law 129 and Part A, Section 10 below.

THE BIDDER/PROPOSER MUST COMPLETE THE SUBCONTRACTOR UTILIZATION PLAN INCLUDED HEREIN (SCHEDULE B, PART II). SUBCONTRACTOR UTILIZATION PLANS WHICH DO NOT INCLUDE THE REQUIRED AFFIRMATIONS WILL BE DEEMED TO BE NON-RESPONSIVE, UNLESS A FULL WAIVER OF THE TARGET SUBCONTRCTING PERCENTAGE IS GRANTED (SCHEDULE B PART III). IN THE EVENT THAT THE CITY DETERMINES THAT VENDOR HAS SUBMITTED A SUBCONTRACTOR UTILIZATION PLAN WHERE THE REQUIRED AFFIRMATIONS ARE COMPLETED BUT OTHER ASPECTS OF THE PLAN ARE NOT COMPLETE, OR CONTAIN A COPY OR COMPUTATION ERROR THAT IS AT ODDS WITH THE AFFIRMATION, THE VENDOR WILL BE NOTIFIED BY THE AGENCY AND WILL BE GIVEN FOUR (4) CALENDAR DAYS FROM RECEIPT OF NOTIFICATION TO CURE THE SPECIFIED DEFICIENCIES AND RETURN A COMPLETED PLAN TO THE AGENCY. FAILURE TO DO SO WILL RESULT IN A DETERMINATION THAT THE BID/PROPOSAL IS NON-RESPONSIVE. RECEIPT OF NOTIFICATION IS DEFINED AS THE DATE NOTICE IS EMAILED OR FAXED (IF THE VENDOR HAS PROVIDED AN EMAIL ADDRESS OR FAX NUMBER), OR NO LATER THAN FIVE (5) DAYS FROM THE DATE OF MAILING OR UPON DELIVERY, IF DELIVERED.

5. Where a Subcontractor Utilization Plan has been submitted, the Contractor shall, within 30 days of issuance by Agency of a notice to proceed, submit a list of proposed persons or entities to which it intends to award subcontracts within the subsequent 12 months. In the case of multi-year contracts, such list shall also be submitted every year thereafter. **PLEASE NOTE: If this Contract is a public works project subject to GML §101(5) (i.e., a contract valued at or below $3M for projects in New York City) or if the Contract is subject to a project labor agreement in accordance with Labor Law §222, and the bidder is required to identify at the time of bid submission its intended subcontractors for the Wicks trades (plumbing and gas fitting; steam heating, hot water heating, ventilating and air conditioning (HVAC); and electric wiring), the Contractor must identify all those to which it intends to award construction subcontracts for any portion of the Wicks trade work at the time of bid submission, regardless of what point in the life of the contract such subcontracts will occur. In identifying intended subcontractors in the bid submission, bidders may satisfy any Subcontractor Participation Goals established for this Contract by proposing one or more subcontractors that are M/WBEs for any portion of the Wicks trade work if the amount to be awarded to such M/WBE subcontractor is under**

$1 million. In the event that the Contractor's selection of a subcontractor is disapproved, the Contractor shall have a reasonable time to propose alternate subcontractors.

6. M/WBE firms must be certified by DSBS in order for the Contractor to credit such firms' participation toward the attainment of the M/WBE participation goals. Such certification must occur prior to the firms' commencement of work as subcontractors. A list of M/WBE firms may be obtained from the DSBS website at www.nyc.gov/buycertified, by emailing DSBS at buyer@sbs.nyc.gov, by calling (212) 513-6356, or by visiting or writing DSBS at 110 William St., New York, New York, 10038, 7th floor. Eligible firms that have not yet been certified may contact DSBS in order to seek certification by visiting www.nyc.gov/getcertified, emailing MWBE@sbs.nyc.gov, or calling the DSBS certification helpline at (212) 513-6311.

7. Where a Subcontractor Utilization Plan has been submitted, the Contractor shall, with each voucher for payment, and/or periodically as Agency may require, submit statements, certified under penalty of perjury, which shall include, but not be limited to, the total amount paid to subcontractors (including subcontractors that are not MBEs or WBEs); the names, addresses and contact numbers of each MBE or WBE hired as a subcontractor pursuant to such plan as well as the dates and amounts paid to each MBE or WBE. The Contractor shall also submit, along with its voucher for final payment, the total amount paid to subcontractors (including subcontractors that are not MBEs or WBEs); and a final list, certified under penalty of perjury, which shall include the name, address and contact information of each subcontractor that is an MBE or WBE hired pursuant to such plan, the work performed by, and the dates and amounts paid to each.

8. If payments made to, or work performed by, MBEs or WBEs are less than the amount specified in the Contractor's Subcontractor Utilization Plan, Agency shall take appropriate action, in accordance with Local Law 129 and Article II below, unless the Contractor has obtained a modification of its Subcontractor Utilization Plan in accordance with Local Law 129 and Part A, Section 11 below.

9. Where a Subcontractor Utilization Plan has been submitted, and the Contractor requests a change order the value of which exceeds 10 percent of the Agreement, Agency shall establish participation goals for the work to be performed pursuant to the change order.

10. Pre-award waiver of **Target Subcontracting Percentage**. Agency may grant a full or partial waiver of the **Target Subcontracting Percentage** to a bidder or proposer, as applicable, who demonstrates—before submission of the bid or proposal—that it has legitimate business reasons for proposing the level of subcontracting in its Subcontractor Utilization Plan. In making its determination, Agency shall consider factors that shall include, but not be limited to, whether the bidder or proposer, as applicable, has the capacity and the bona fide intention to perform the Contract without any subcontracting, or to perform the Contract without awarding the amount of subcontracts for under one million dollars represented by the **Target Subcontracting Percentage**. In making such determination, Agency may consider whether the Subcontractor Utilization Plan is consistent with past subcontracting practices of the bidder or proposer, as applicable, and whether the bidder or proposer, as applicable, has made good faith efforts to identify portions of the Contract that it intends to subcontract.

11. Modification of Subcontractor Utilization Plan. A Contractor may request a modification of its Subcontractor Utilization Plan (**Subcontractor Participation Goals**) after award of this Contract. **PLEASE NOTE: If this Contract is a public works project subject to GML §101(5) (i.e., a contract valued at or below $3M for projects in New York City) or if the Contract is subject to a project labor agreement in accordance with Labor Law §222, and the bidder is required to identify at the time of bid submission its intended subcontractors for the Wicks trades (plumbing and gas fitting; steam heating, hot water heating, ventilating and air conditioning (HVAC); and electric wiring), the Contractor may request a Modification of its Subcontractor Utilization Plan as part of its bid submission.** The Agency may grant a request for Modification of a Contractor's Subcontractor Utilization Plan if it determines that the Contractor has established, with appropriate documentary and other evidence, that it made reasonable, good faith efforts to meet the **Subcontractor Participation Goals**. In making such determination, Agency shall consider evidence of the following efforts, as applicable, along with any other relevant factors:

(a) The Contractor advertised opportunities to participate in the Contract, where appropriate, in general circulation media, trade and professional association publications and small business media, and publications of minority and women's business organizations;
(b) The Contractor provided notice of specific opportunities to participate in the Contract, in a timely manner, to minority and women's business organizations;
(c) The Contractor sent written notices, by certified mail or facsimile, in a timely manner, to advise MBEs and WBEs that their interest in the Contract was solicited;
(d) The Contractor made efforts to identify portions of the work that could be substituted for portions originally designated for participation by MBEs and/or WBEs in the Subcontractor Utilization Plan, and for which the Contractor claims an inability to retain MBEs or WBEs;
(e) The Contractor held meetings with MBEs and/or WBEs prior to the date their bids or proposals were due, for the purpose of explaining in detail the scope and requirements of the work for which their bids or proposals were solicited;
(f) The Contractor made efforts to negotiate with MBEs and/or WBEs as relevant to perform specific subcontracts;
(g) Timely written requests for assistance made by the Contractor to Agency's M/WBE liaison officer and to DSBS;
(h) Description of how recommendations made by DSBS and Agency were acted upon and an explanation of why action upon such recommendations did not lead to the desired level of participation of MBEs and/or WBEs.

Agency's M/WBE officer shall provide written notice to the Contractor of the determination.

12. If this Contract is for an indefinite quantity of construction or professional services or is a requirements type contract and the Contractor has submitted a Subcontractor Utilization Plan and has committed to subcontract work to MBEs and/or WBEs in order to meet the **Subcontractor Participation Goals**, the Contractor will not be deemed in violation of the M/WBE requirements for this Contract with regard to any work which was intended to be subcontracted to an MBE and/or WBE to the extent that the Agency has determined that such work is not needed.

13. If **Subcontractor Participation Goals** have been established for this Contract, Agency shall evaluate and assess the Contractor's performance in meeting those goals, and such evaluation and assessment shall become part of the Contractor's overall contract performance evaluation.

PART B: MISCELLANEOUS

1. The Contractor shall take notice that, if this solicitation requires the establishment of a Subcontractor Utilization Plan, the resulting contract may be audited by DSBS to determine compliance with Section 6-129. See 6-129(e)(10). Furthermore, such resulting contract may also be examined by the City's Comptroller to assess compliance with the Subcontractor Utilization Plan.

2. Pursuant to DSBS rules, construction contracts that include a requirement for a Subcontractor Utilization Plan shall not be subject to the law governing Locally Based Enterprises set forth in Administrative Code Section 6-108.1.

3. DSBS is available to assist contractors and potential contractors in determining the availability of MBEs and WBEs to participate as subcontractors, and in identifying opportunities that are appropriate for participation by MBEs and WBEs in contracts.

4. Prospective contractors are encouraged to enter into joint ventures with MBEs and WBEs.

5. By submitting a bid or proposal the Contractor hereby acknowledges its understanding of the M/WBE requirements set forth herein and the pertinent provisions of Local Law 129 of 2005, and any rules promulgated thereunder, and if awarded this Contract, the Contractor hereby agrees to comply with the M/WBE requirements of

this Contract and pertinent provisions of Local Law 129 of 2005, and any rules promulgated thereunder, all of which shall be deemed to be material terms of this Contract. The Contractor hereby agrees to make all reasonable, good faith efforts to solicit and obtain the participation of M/WBE's to meet the required **Subcontractor Participation Goals.**

ARTICLE II. ENFORCEMENT

1. If Agency determines that a bidder or proposer, as applicable, has, in relation to this procurement, violated Section 6-129 or the DSBS rules promulgated pursuant to Section 6-129, Agency may disqualify such bidder or proposer, as applicable, from competing for this Contract and the Agency may revoke such bidder's or proposer's prequalification status, if applicable.

2. Whenever Agency believes that the Contractor or a subcontractor is not in compliance with Section 6-129 or the DSBS rules promulgated pursuant to Section 6-129, or any provision of this Contract that implements Section 6-129, including, but not limited to any Subcontractor Utilization Plan, Agency shall send a written notice to the Contractor describing the alleged noncompliance and offering an opportunity to be heard. Agency shall then conduct an investigation to determine whether such Contractor or subcontractor is in compliance.

3. In the event that the Contractor has been found to have violated Section 6-129, the DSBS rules promulgated pursuant to Section 6-129, or any provision of this Contract that implements this Section 6-129, including, but not limited any Subcontractor Utilization Plan, Agency may determine that one of the following actions should be taken:

(a) entering into an agreement with the Contractor allowing the Contractor to cure the violation;
(b) revoking the Contractor's pre-qualification to bid or make proposals for future contracts;
(c) making a finding that the Contractor is in default of the Contract;
(d) terminating the Contract;
(e) declaring the Contractor to be in breach of Contract;
(f) withholding payment or reimbursement;
(g) determining not to renew the Contract;
(h) assessing actual and consequential damages;
(i) assess liquidated damages or reduction of fees, provided that liquidated damages may be based on amounts representing costs of delays in carrying out the purposes of the program established by Section 6-129, or in meeting the purposes of the Contract, the costs of meeting utilization goals through additional procurements, the administrative costs of investigation and enforcement, or other factors set forth in the Contract;
(j) exercise rights under the Contract to procure goods, services or construction from another contractor and charge the cost of such contract to the Contractor that has been found to be in noncompliance; or
(k) take any other appropriate remedy.

4. If a Subcontractor Utilization Plan has been submitted, and pursuant to this Article II, Section 3, the Contractor has been found to have failed to award subcontracts to MBEs and/or WBEs sufficient to meet the Subcontractor Participation Goals contained in its Subcontractor Utilization Plan or the Subcontractor Participation Goals as modified by Agency pursuant to Article I, Part A, Section 11, Agency may assess liquidated damages in the amount of ten percent (10%) of the difference between the dollar amount of subcontracts required to be awarded to MBE and/or WBE subcontractors to meet the Subcontractor Participation Goals and the dollar amount the Contractor actually awarded and paid to MBE and/or WBE subcontractors. In view of the difficulty of accurately ascertaining the loss which the City will suffer by reason of Contractor's failure to meet the Subcontractor Participation Goals, the foregoing amount is hereby fixed and agreed as the liquidated damages that the City will suffer by reason of such failure, and not as a penalty. Agency may deduct and retain out of any monies which may become due under this Contract the amount of any such liquidated damages; and in case the amount which may become due under this Contract shall be less than the amount of liquidated damages suffered by the City, the Contractor shall be liable to pay the difference.

5. Whenever Agency has reason to believe that an MBE or WBE is not qualified for certification, or is participating in a contract in a manner that does not serve a commercially useful function (as defined in Section 6-129), or has violated any provision of Section 6-129, Agency shall notify the commissioner of DSBS who shall determine whether the certification of such business enterprise should be revoked.

6. Statements made in any instrument submitted to Agency pursuant to Section 6-129 shall be submitted under penalty of perjury and any false or misleading statement or omission shall be grounds for the application of any applicable criminal and/or civil penalties for perjury. The making of a false or fraudulent statement by an MBE or WBE in any instrument submitted pursuant to Section 6-129 shall, in addition, be grounds for revocation of its certification.

7. The Contractor's record in implementing its Subcontractor Utilization Plan shall be a factor in the evaluation of its performance. Whenever a contracting agency determines that a contractor's compliance with a Subcontractor Utilization Plan has been unsatisfactory, the agency shall, after consultation with the city chief procurement officer, file an advice of caution form for inclusion in VENDEX as caution data.

Deputy

IN WITNESS WHEREOF, the Commissioner, on behalf of the City of New York, and the Contractor, have executed this agreement in quadruplicate, two parts of which are to remain with the Commissioner, another to be filed with the Comptroller of the City, and the fourth to be delivered to the Contractor.

THE CITY OF NEW YORK

By: _____
Deputy Commissioner

CONTRACTOR:

By: _____
(Member of Firm or Officer of Corporation)

Title: MANAGING MEMBER

(Where Contractor is a Corporation, add):
Attest:

_____
Secretary

(Seal)

_____

ACKNOWLEDGEMENT OF PRINCIPAL, IF A CORPORATION

State of New York County of Queens ss:

On this 10 day of 9, 13, before me personally came ANTONIO CARDOSO to me known who, being by me duly sworn did depose and say that he resides at 952 HOLMDEL RD HOLMDEL, N.J. that he is the MANAGING MEMBER of the corporation described in and which executed the foregoing instrument; that he knows the seal of said corporation; that one of the seals affixed to said instrument is such seal; that it was so affixed by order of the directors of said corporation, and that he signed his name thereto by like order.

VICTORIA AYO-VAUGHAN
Notary Public, State of New York
Registration #01AY5014042
Qualified In Queens County
Commission Expires July 15, 2015

Notary Public or Commissioner of Deeds

ACKNOWLEDGEMENT OF PRINCIPAL, IF A PARTNERSHIP

State of _____ County of _____ ss:

On this _____ day of _____, _____, before me personally appeared _____ to me known, and known to me to be one of the members of the firm of _____ _____ described in and who executed the foregoing instrument; and he acknowledged to me that he executed the same as and for the act and deed of said firm.

Notary Public or Commissioner of Deeds

ACKNOWLEDGEMENT OF PRINCIPAL, IF AN INDIVIDUAL

State of _____ County of _____ ss:

On this _____ day of _____, _____, before me personally appeared _____ to me known, and known to me to be the person described in and who executed the foregoing instrument; and acknowledged that he executed the same.

Notary Public or Commissioner of Deeds

ACKNOWLEDGEMENT BY COMMISSIONER

State of New York County of Queens ss:

On this 10th day of Sept, 2013, before me personally came Eric MacFarlane to me known, and known to be the Deputy Commissioner of the Department of Design and Construction of The City of New York, the person described as such in and who as such executed the foregoing instrument and acknowledged to me that he executed the same as Deputy Commissioner for the purposes therein mentioned.

Notary Public or Commissioner of Deeds

VICTORIA AYO-VAUGHAN
Notary Public, State of New York
Registration #01AY5014042
Qualified In Queens County
Commission Expires July 15, 2015

AUTHORITY

MAYOR'S CERTIFICATE NO. CBX DATED
BUDGET DIRECTOR'S CERTIFICATE NO. DATED

APPROPRIATION
COMMISSIONER'S CERTIFICATE

In conformity with the provisions of Section 6-101 of the Administrative Code of the City of New York, it is hereby certified that the estimated cost of the work, materials and supplies required by the within Contract, amounting to

Three million two hundred eighty thousand twenty nine dollars 00/100.

Dollars ($ 3,280,029.00)

is chargeable to the fund of the Department of Design and Construction entitled Code

QED100P

Department of Design and Construction

I hereby certify that the specifications contained herein comply with the terms and conditions of the BUDGET.

Deputy Commissioner

COMPTROLLER'S CERTIFICATE

The City of New York

Pursuant to the provisions of Section 6-101 of the Administrative Code of the City of New York, I hereby certify that there remains unapplied and unexpended a balance of the above mentioned fund applicable to this Contract sufficient to pay the estimated expense of executing the same viz:

$

Comptroller

Performance Bond #1 (Pages 78 to 81): Use if the total contract price is $5 Million Or Less. Performance Bond #1 has been approved by the U.S. Small Business Administration ("SBA") for participation in its Bond Guarantee Program.

Bond No. BCY1024084

PERFORMANCE BOND #1

KNOW ALL PERSONS BY THESE PRESENTS:,

That we, Cruz Contractors LLC
952 Holmdel Road
Holmdel, NJ 07733

hereinafter referred to as the "Principal,"

and, The Hanover Insurance Company
440 Lincoln Street
Worcester, MA 01653

hereinafter referred to as the "Surety" ("Sureties") are held and firmly bound to THE CITY OF NEW YORK, hereinafter referred to as the "City" or to its successors and assigns in the penal sum of

Three million Two Hundred Eighty Thousand Twenty Nine and no/100

($3,280,029.00) Dollars, lawful money of the United States for the payment of which said sum of money well and truly to be made, we, and each of us, bind ourselves, our heirs, executors, administrators, successors and assigns, jointly and severally, firmly by these presents.

WHEREAS, the Principal is about to enter, or has entered, into a Contract in writing with the City for

Installation of 60 Inch and 12 Inch Water Mains in 54th Street between Flushing Ave. and Grand Ave. Borough of Queens, QED-1008; E-Pin: 85013B008001; DDC PIN: 8502012WM0006C

a copy of which Contract is annexed to and hereby made a part of this bond as though herein set forth in full;

NOW, THEREFORE, the conditions of this obligation are such that if the Principal, his or its representatives or assigns, shall well and faithfully perform the said Contract and all modifications, amendments, additions and alterations thereto that may hereafter be made, according to its terms and its true intent and meaning, including repair and or replacement of defective work and guarantees of maintenance for the periods stated in the Contract, and shall fully indemnify and save harmless the City from all cost and damage which it may suffer by reason of the Principal's default of the Contract, and shall fully reimburse and repay the City for all outlay and expense which the City may incur in making

<u>Performance Bond #1 (Pages 78 to 81)</u>: Use if the total contract price is $5 Million Or Less. Performance Bond #1 has been approved by the U.S. Small Business Administration ("SBA") for participation in its Bond Guarantee Program.

good any such default and shall protect the said City of New York against, and pay any and all amounts, damages, cost and judgments which may or shall be recovered against said City or its officers or agents or which the said City of New York may be called upon to pay any person or corporation by reason of any damages arising or growing out of the Principal's default of the Contract, then this obligation shall be null and void, otherwise to remain in full force and effect.

The Surety (Sureties), for value received, hereby stipulates and agrees, upon written notice from the City that the City has determined that the Principal is in default of the Contract, to (1) pay the City the cost to complete the contract as determined by the City in excess of the balance of the Contract held by the City, plus any damages or costs to which the City is entitled, up to the full amount of the above penal sum, (2) fully perform and complete the Work to be performed under the Contract, pursuant to the terms, conditions, and covenants thereof, or (3) tender a completion Contractor that is acceptable to the City. The Surety (Sureties) further agrees, at its option, either to notify the City that it elects to pay the city the cost of completion plus any applicable damages and costs under option (1) above, or to commence and diligently perform the Work specified in the Contract, including physical site work, within twenty-five (25) business days after written notice thereof from the City and, if the Surety elects to fully perform and complete the Work, then to complete all Work within the time set forth in the Contract or such other time as agreed to between the City and Surety in accordance with the Contract. If the Surety elects to tender payment pursuant to (1) above, then the Surety shall tender such amount within fifteen (15) business days notification from the City of the cost of completion. The Surety and the City reserve all rights and defenses each may have against the other; provided, however, that the Surety expressly agrees that its reservation of rights shall not provide a basis for non-performance of its obligation to pay the City the cost of completion, to commence and complete all Work as provided herein, or to tender a completion contractor.

The Surety (Sureties), for value received, for itself and its successors and assigns, hereby stipulates and agrees that the obligation of said Surety (Sureties) and its bond shall be in no way impaired or affected by any extension of time, modification, omission, addition, or change in or to the said Contract or the Work to be performed thereunder, or by any payment thereunder before the time required therein, or by any waiver of any provisions thereof, or any moneys due or to become due thereunder; and said Surety (Sureties) does hereby waive notice of any and all of such extensions, modifications, omissions, additions, changes, payments, and waivers, and hereby expressly stipulates and agrees that any and all things done and omitted to be done by and in relation to subcontractors shall have the same effect as to said Surety (Sureties) as though done or omitted to be done by or in relation to said Principal. Notwithstanding the above, if the City makes payments to the Principal before the time required by the contract that in the aggregate exceed $100,000 or 10% of the Contract price, whichever is less, and that have not become earned prior to the Principal being found to be in default, then all payments made to the Principal before the time required by the Contract shall be added to the remaining contract value available to be paid for the completion of the Contract as if such sums had not been paid to the Principal, but shall not provide a basis for non-performance of its obligation to pay the City the cost of completion, to commence and to complete all Work as provided herein, or to tender a completion contractor.

Performance Bond #1 (Pages 78 to 81): Use if the total contract price is $5 Million Or Less. Performance Bond #1 has been approved by the U.S. Small Business Administration ("SBA") for participation in its Bond Guarantee Program.

PERFORMANCE BOND #1 (Page 3)

IN WITNESS WHEREOF, The Principal and the Surety (Sureties) have hereunto set their hands and seals, and such of them as are corporations have caused their corporate seals to be hereunto affixed and these presents to be signed by their proper officers, this

9th day of September, 20 13.

(Seal)

Cruz Contractors LLC (L.S.)
Principal

By: [signature]
Antonio Cardoso - Managing Member

(Seal)
Surety

The Hanover Insurance Company

By: [signature]
Lisa Nosal, Atty-in-fact

(Seal)
Surety

By: _____

(Seal)
Surety

By: _____

(Seal)
Surety

By: _____

(Seal)
Surety

By: _____

Bond Premium Rate _____

Bond Premium Cost _____

If the Contractor (Principal) is a partnership, the bond should be signed by each of the individuals who are partners.

If the Contractor (Principal) is a corporation, the bond should be signed in its correct corporate name by a duly authorized officer, agent, or attorney-in-fact.

There should be executed an appropriate number of counterparts of the bond corresponding to the number of counterparts of the Contract.

Performance Bond #1 (Pages 78 to 81): Use if the total contract price is $5 Million Or Less. Performance Bond #1 has been approved by the U.S. Small Business Administration ("SBA") for participation in its Bond Guarantee Program.

N/A

ACKNOWLEDGMENT OF PRINCIPAL IF A CORPORATION

State of _____ County of _____ ss:

On this _____ day of _____, 20_____ before me personally came _____,
to me known, who, being by me duly sworn did depose and say that he/she resides at _____
_____; that he/she is the _____
of the corporation described in and which executed the foregoing instrument; and that he/she signed his/her name to the foregoing instrument by order of the directors of said corporation as the duly authorized and binding act thereof.

_____
Notary Public or Commissioner of Deeds.

LIMITED LAIBILITY COMPANY

ACKNOWLEDGMENT OF PRINCIPAL IF A ~~PARTNERSHIP~~

State of New Jersey County of Monmouth ss:

On this 9th day of September, 20 13 before me personally came Antonio Cardoso,
to me known, who, being by me duly sworn did dispose and say that he/she resides at 952 Holmdel Road
Holmdel, NJ 07733; that he/she is a Managing Member ~~partner~~ of Cruz Contractors LLC, a limited/~~general partnership~~ Liability Company existing under the laws of the State of New Jersey, the ~~partnership~~ LLC described in and which executed the foregoing instrument; and that he/she signed his/her name to the foregoing instrument as the duly authorized and binding act of said ~~partnership~~. Limited Liability Company.

Lisa E Gulino
Notary Public or Commissioner of Deeds.

LISA E GULINO
NOTARY PUBLIC
STATE OF NEW JERSEY
My Commission Expires December 28, 2016

N/A

ACKNOWLEDGMENT OF PRINCIPAL IF AN INDIVIDUAL

State of _____ County of _____ ss:

On this _____ day of _____, 20_____ before me personally came _____,
to me known, who,.being by me duly sworn did depose and say that he/she resides at _____
_____, and that he/she is the individual whose name is subscribed to the within instrument and acknowledged to me that by his/her signature on the instrument, said individual executed the instrument.

_____
Notary Public or Commissioner of Deeds

Each executed bond should be accompanied by: (a) appropriate acknowledgments of the respective parties; (b) appropriate duly certified copy of Power of Attorney or other certificate of authority where bond is executed by agent, officer or other representative of Principal or Surety; (c) a duly certified extract from By-Laws or resolutions of Surety under which Power of Attorney or other certificate of authority of its agent, officer or representative was issued, and (d) certified copy of latest published financial statement of assets and liabilities of Surety.

* * * * * * * *

Affix Acknowledgments and Justification of Sureties.

ACKNOWLEDGEMENT OF SURETY

State of New Jersey]
|-ss
County of Passaic]

On 9-9-2013, before me personally came Lisa Nosal to me known, who, being by me duly sworn, did depose and say that she is an attorney-in-fact of The Hanover Insurance Company the corporation described in and which executed the within instrument; that she knows the corporate seal of said corporation, and that the seal affixed to the within instrument is such corporate seal, and that she signed the said instrument and affixed the said seal as Attorney-in-Fact by authority of the Board of Directors of said corporation and by authority of this office under the Standing Resolutions thereof.

My Commission expires:

Notary Public

LAURA M. RENNE
NOTARY PUBLIC OF NEW JERSEY
Commission Expires 2/5/2014

THE HANOVER INSURANCE COMPANY
MASSACHUSETTS BAY INSURANCE COMPANY
CITIZENS INSURANCE COMPANY OF AMERICA

POWERS OF ATTORNEY
CERTIFIED COPY

KNOW ALL MEN BY THESE PRESENTS: That THE HANOVER INSURANCE COMPANY and MASSACHUSETTS BAY INSURANCE COMPANY, both being corporations organized and existing under the laws of the State of New Hampshire, and CITIZENS INSURANCE COMPANY OF AMERICA, a corporation organized and existing under the laws of the State of Michigan, do hereby constitute and appoint

Louis A. Vlahakes, Pamela Boyle, Lisa Nosal, and/or Robert E. Culnen

of **Totowa, NJ** and each is a true and lawful Attorney(s)-in-fact to sign, execute, seal, acknowledge and deliver for, and on its behalf, and as its act and deed any place within the United States, or, if the following line be filled in, only within the area therein designated any and all bonds, recognizances, undertakings, contracts of indemnity or other writings obligatory in the nature thereof, as follows:
Any such obligations in the United States, not to exceed Forty Million and No/100 ($40,000,000) in any single instance

and said companies hereby ratify and confirm all and whatsoever said Attorney(s)-in-fact may lawfully do in the premises by virtue of these presents. These appointments are made under and by authority of the following Resolution passed by the Board of Directors of said Companies which resolutions are still in effect:

"RESOLVED, That the President or any Vice President, in conjunction with any Vice President, be and they are hereby authorized and empowered to appoint Attorneys-in-fact of the Company, in its name and as its acts, to execute and acknowledge for and on its behalf as Surety any and all bonds, recognizances, contracts of indemnity, waivers of citation and all other writings obligatory in the nature thereof, with power to attach thereto the seal of the Company. Any such writings so executed by such Attorneys-in-fact shall be as binding upon the Company as if they had been duly executed and acknowledged by the regularly elected officers of the Company in their own proper persons." (Adopted October 7, 1981 - The Hanover Insurance Company; Adopted April 14, 1982 - Massachusetts Bay Insurance Company; Adopted September 7, 2001 - Citizens Insurance Company of America)

IN WITNESS WHEREOF, THE HANOVER INSURANCE COMPANY, MASSACHUSETTS BAY INSURANCE COMPANY and CITIZENS INSURANCE COMPANY OF AMERICA have caused these presents to be sealed with their respective corporate seals, duly attested by two Vice Presidents, this **9th** day of **July 2012**.

THE HANOVER INSURANCE COMPANY
MASSACHUSETTS BAY INSURANCE COMPANY
CITIZENS INSURANCE COMPANY OF AMERICA

Robert Thomas, Vice President

Joe Brenstrom, Vice President

THE COMMONWEALTH OF MASSACHUSETTS)
COUNTY OF WORCESTER) ss.

On this **9th** day of **July 2012** before me came the above named Vice Presidents of The Hanover Insurance Company, Massachusetts Bay Insurance Company and Citizens Insurance Company of America, to me personally known to be the individuals and officers described herein, and acknowledged that the seals affixed to the preceding instrument are the corporate seals of The Hanover Insurance Company, Massachusetts Bay Insurance Company and Citizens Insurance Company of America, respectively, and that the said corporate seals and their signatures as officers were duly affixed and subscribed to said instrument by the authority and direction of said Corporations.

BARBARA A. GARLICK
Notary Public
Commonwealth of Massachusetts
My Commission Expires Sept. 21, 2018

Barbara A. Garlick, Notary Public
My Commission Expires September 21, 2018

I, the undersigned Vice President of The Hanover Insurance Company, Massachusetts Bay Insurance Company and Citizens Insurance Company of America, hereby certify that the above and foregoing is a full, true and correct copy of the Original Power of Attorney issued by said Companies, and do hereby further certify that the said Powers of Attorney are still in force and effect.

This Certificate may be signed by facsimile under and by authority of the following resolution of the Board of Directors of The Hanover Insurance Company, Massachusetts Bay Insurance Company and Citizens Insurance Company of America.

"RESOLVED, That any and all Powers of Attorney and Certified Copies of such Powers of Attorney and certification in respect thereto, granted and executed by the President or any Vice President in conjunction with any Vice President of the Company, shall be binding on the Company to the same extent as if all signatures therein were manually affixed, even though one or more of any such signatures thereon may be facsimile." (Adopted October 7, 1981 - The Hanover Insurance Company; Adopted April 14, 1982 - Massachusetts Bay Insurance Company; Adopted September 7, 2001 - Citizens Insurance Company of America)

GIVEN under my hand and the seals of said Companies, at Worcester, Massachusetts, this 9th day of September 2013.

THE HANOVER INSURANCE COMPANY
MASSACHUSETTS BAY INSURANCE COMPANY
CITIZENS INSURANCE COMPANY OF AMERICA

Glenn Margosian, Vice President

The Hanover Insurance Group.
The Hanover Insurance Company | 440 Lincoln Street, Worcester, MA 01653
Citizens Insurance Company of America | 645 West Grand River Avenue, Howell, MI 48843
Massachusetts Bay Insurance Company | 440 Lincoln Street, Worcester, MA 01653

The Hanover Insurance Company, Bedford, New Hampshire
Financial Statement as of December 31, 2012

ASSETS

		2012
Cash in Banks (Including Short-Term investments)		$ 30,110,655
Bonds and Stocks		$ 4,434,680,755
Other Admitted Assets		$ 1,231,711,930
Total Admitted Assets		$ 5,696,503,340

LIABILITIES, CAPITAL AND SURPLUS

Reserve for Unearned Premiums		$ 1,314,370,812
Reserve for Loss and Loss Expense		$ 2,185,895,075
Reserve for Taxes		0
Funds held under reinsurance treaties		$ 3,157,604
Reserve for all other liabilities		$ 674,213,907
Capital Stock – $1.00 par	$ 5,000,000	
Net Surplus	$ 1,513,865,942	
Policyholders' Surplus		$ 1,518,865,942
Total Liabilities, Capital and Surplus		$ 5,696,503,340

COMMONWEALTH OF MASSACHUSETTS
COUNTY OF WORCESTER } s.s.:

Martin D. Kelly, Asst. Treasurer of The Hanover Insurance Company, being duly sworn deposes and says that he is the above described officer of said Company, and certifies that the foregoing statement is a true statement of the condition and affairs of the said Company on December 31, 2012.

MARTIN D. KELLY
Asst. Treasurer

Payment Bond (Pages 86 to 89): Use for any contract for which a Payment Bond is required.

Bond No. BCY1024084

PAYMENT BOND

KNOW ALL PERSONS BY THESE PRESENTS, That we,

Cruz Contractors LLC
952 Holmdel Road
Holmdel, NJ 07733

hereinafter referred to as the "Principal", and
The Hanover Insurance Company

440 Lincoln St.
Worcester, MA 01653

hereinafter referred to as the "Surety" ("Sureties") are held and firmly bound to THE CITY OF NEW YORK, hereinafter referred to as the "City" or to its successors and assigns, in the penal sum of

Three million Two Hundred Eighty Thousand Twenty Nine and no/100

($3,280,029.00) Dollars, lawful money of the United States, for the payment of which said sum of money well and truly to be made, we, and each of us, bind ourselves, our heirs, executors, administrators, successors and assigns, jointly and severally, firmly by these presents.

WHEREAS, the Principal is about to enter, or has entered, into a Contract in writing with the City for

Installation of 60 Inch and 12 Inch Water Mains in 54th Street Between Flushing Ave. and Grand Ave.

Borough of Queens, QED-1008; E-PIN: 85013B008001; DDC PIN: 8502012WM0006C

a copy of which Contract is annexed to and hereby made a part of this bond as though herein set forth in full;

NOW, THEREFORE, the conditions of this obligation are such that if the Principal, his or its representatives or assigns and other Subcontractors to whom Work under this Contract is sublet and his or their successors and assigns shall promptly pay or cause to be paid all lawful claims for

(a) Wages and compensation for labor performed and services rendered by all persons engaged in the prosecution of the Work under said Contract, and any amendment or extension thereof or addition thereto, whether such persons be agents servants or employees of the Principal or any such Subcontractor, including all persons so engaged who perform the work of laborers or mechanics at or in the vicinity of the site

Payment Bond (Pages 86 to 89): Use for any contract for which a Payment Bond is required.

of the Project regardless of any contractual relationship between the Principal or such Subcontractors, or his or their successors or assigns, on the one hand and such laborers or mechanics on the other, but not including office employees not regularly stationed at the site of the project; and

(b) Materials and supplies (whether incorporated in the permanent structure or not), as well as teams, fuels, oils, implements or machinery furnished, used or consumed by said Principal or any subcontractor at or in the vicinity of the site of the Project in the prosecution of the Work under said Contract and any amendment or extension thereof or addition thereto; then this obligation shall be void, otherwise to remain in full force and effect.

This bond is subject to the following additional conditions, limitations and agreements:

(a) The Principal and Surety (Sureties) agree that this bond shall be for the benefit of any materialmen or laborer having a just claim, as well as the City itself.

(b) All persons who have performed labor, rendered services or furnished materials and supplies, as aforesaid, shall have a direct right of action against the Principal and his, its or their successors and assigns, and the Surety (Sureties) herein, or against either or both or any of them and their successors and assigns. Such persons may sue in their own name, and may prosecute the suit to judgment and execution without the necessity of joining with any other persons as party plaintiff.

(c) The Principal and Surety (Sureties) agree that neither of them will hold the City liable for any judgment for costs of otherwise, obtained by either or both of them against a laborer or materialman in a suit brought by either a laborer or materialman under this bond for moneys allegedly due for performing work or furnishing material.

(d) The Surety (Sureties) or its successors and assigns shall not be liable for any compensation recoverable by an employee or laborer under the Workmen's Compensation Law.

(e) In no event shall the Surety (Sureties), or its successors or assigns, be liable for a greater sum than the penalty of this bond or be subject to any suit, action or proceeding hereon that is instituted by any person, firm, or corporation hereunder later than two years after the complete performance of said Contract and final settlement thereof.

The Principal, for himself and his successors and assigns, and the Surety (Sureties), for itself and its successors and assigns, do hereby expressly waive any objection that might be interposed as to the right of the City to require a bond containing the foregoing provisions, and they do hereby further expressly waive any defense which they or either of them might interpose to an action brought hereon by any person, firm or corporation, including subcontractors, materialmen and third persons, for work, labor, services, supplies or material performed rendered, or furnished as aforesaid upon the ground that there is no law authorizing the City to require the foregoing provisions to be place in this bond.

And the Surety (Sureties), for value received, for itself and its successors and assigns, hereby stipulates and agrees that the obligation of said Surety (Sureties), and its bonds shall be in no way impaired or affected by any extension of time, modification, omission, addition, or change in or of the said Contract or the work to be performed thereunder, or by any payment thereunder before the time required therein, or by any waiver of any provisions thereof, or by any assignment, subletting or other transfer thereof or of any part thereof, or of any Work to be performed, or any moneys due to become due thereunder and said Surety (Sureties) does hereby waive notice of any and all of such extensions, modifications, omissions, additions, changes, payments, waivers, assignments, subcontracts and transfers, and hereby expressly stipulates and agrees that any and all things done and omitted to be done by and in relation to assignees, Subcontractors, and other transferees shall have the same effect as to said Surety (Sureties) as though done or omitted to be done or in relation to said Principal.

Payment Bond (Pages 86 to 89): Use for any contract for which a Payment Bond is required.

PAYMENT BOND (Page 3)

IN WITNESS WHEREOF, the Principal and the Surety (Sureties) have hereunto set their hands and seals, and such of them as are corporations have caused their corporate seals to be hereunto affixed and these presents to be signed by their proper officers, this 9th day of September, 2013.

(Seal) Cruz Contractors LLC (L.S.)
Principal

By: Antonio Cardoso - Managing Member

(Seal) The Hanover Insurance Company
Surety

By: Lisa Nosal, Atty-in-fact

(Seal) _____
Surety

By: _____

(Seal) _____
Surety

By: _____

(Seal) _____
Surety

By: _____

If the Contractor (Principal) is a partnership, the bond should be signed by each of the individuals who are partners.

If the Contractor (Principal) is a corporation, the bond should be signed in its correct corporate name by a duly authorized officer, agent, or attorney-in-fact.

There should be executed an appropriate number of counterparts of the bond corresponding to the number of counterparts of the Contract.

Payment Bond (Pages 86 to 89): **Use for any contract for which a Payment Bond is required.**

PAYMENT BOND (Page 4)

ACKNOWLEDGMENT OF PRINCIPAL, IF A CORPORATION N/A

State of _____ County of _____ ss:

On this _____ day of _____, _____, before me personally came _____ to me known, who, being by me duly sworn did depose and say that he resides at _____ _____ that he is the _____ of the corporation described in and which executed the foregoing instrument; that he knows the seal of said corporation; that one of the seals affixed to said instrument is such seal; that it was so affixed by order of the directors of said corporation, and that he signed his name thereto by like order.

_____
Notary Public or Commissioner of Deeds

ACKNOWLEDGMENT OF PRINCIPAL, IF A ~~PARTNERSHIP~~ Limited Liability Company

State of New Jersey County of Monmouth ss:

On this 9th day of Sept, 2013, before me personally appeared Antonio Cardoso to me known, and known to me to be one of the members of the firm of Cruz Contractors LLC _____ described in and who executed the foregoing instrument; and he acknowledged to me that he executed the same as and for the act and deed of said firm.

LISA E GULINO
NOTARY PUBLIC
STATE OF NEW JERSEY
My Commission Expires December 28, 2016

Lisa E Gulino
Notary Public or Commissioner of Deeds

ACKNOWLEDGMENT OF PRINCIPAL, IF AN INDIVIDUAL N/A

State of _____ County of _____ ss:

On this _____ day of _____, _____, before me personally appeared _____ to me known, and known to me to be the person described in and who executed the foregoing instrument; and acknowledged that he executed the same.

_____
Notary Public or Commissioner of Deeds

Each executed bond should be accompanied by: (a) appropriate acknowledgments of the respective parties; (b) appropriate duly certified copy of Power of Attorney or other certificate of authority where bond is executed by agent, officer or other representative of Principal or Surety; (c) a duly certified extract from By-Laws or resolutions of Surety under which Power of Attorney or other certificate of authority of its agent, officer or representative was issued, and (d) certified copy of latest published financial statement of assets and liabilities of Surety.

* * * * * * * *

Affix Acknowledgments and Justification of Sureties.

ACKNOWLEDGEMENT OF SURETY

State of New Jersey]
|-ss
County of Passaic]

On 9-9-2013, before me personally came Lisa Nosal to me known, who, being by me duly sworn, did depose and say that she is an attorney-in-fact of The Hanover Insurance Company the corporation described in and which executed the within instrument; that she knows the corporate seal of said corporation, and that the seal affixed to the within instrument is such corporate seal, and that she signed the said instrument and affixed the said seal as Attorney-in-Fact by authority of the Board of Directors of said corporation and by authority of this office under the Standing Resolutions thereof.

My Commission expires:

Notary Public

LAURA M. RENNE
NOTARY PUBLIC OF NEW JERSEY
Commission Expires 2/5/2014

THE HANOVER INSURANCE COMPANY
MASSACHUSETTS BAY INSURANCE COMPANY
CITIZENS INSURANCE COMPANY OF AMERICA

POWERS OF ATTORNEY
CERTIFIED COPY

KNOW ALL MEN BY THESE PRESENTS: That THE HANOVER INSURANCE COMPANY and MASSACHUSETTS BAY INSURANCE COMPANY, both being corporations organized and existing under the laws of the State of New Hampshire, and CITIZENS INSURANCE COMPANY OF AMERICA, a corporation organized and existing under the laws of the State of Michigan, do hereby constitute and appoint

Louis A. Vlahakes, Pamela Boyle, Lisa Nosal, and/or Robert E. Culnen

of **Totowa, NJ** and each is a true and lawful Attorney(s)-in-fact to sign, execute, seal, acknowledge and deliver for, and on its behalf, and as its act and deed any place within the United States, or, if the following line be filled in, only within the area therein designated any and all bonds, recognizances, undertakings, contracts of indemnity or other writings obligatory in the nature thereof, as follows:

Any such obligations in the United States, not to exceed Forty Million and No/100 ($40,000,000) in any single instance

and said companies hereby ratify and confirm all and whatsoever said Attorney(s)-in-fact may lawfully do in the premises by virtue of these presents. These appointments are made under and by authority of the following Resolution passed by the Board of Directors of said Companies which resolutions are still in effect:

"RESOLVED, That the President or any Vice President, in conjunction with any Vice President, be and they are hereby authorized and empowered to appoint Attorneys-in-fact of the Company, in its name and as its acts, to execute and acknowledge for and on its behalf as Surety any and all bonds, recognizances, contracts of indemnity, waivers of citation and all other writings obligatory in the nature thereof, with power to attach thereto the seal of the Company. Any such writings so executed by such Attorneys-in-fact shall be as binding upon the Company as if they had been duly executed and acknowledged by the regularly elected officers of the Company in their own proper persons." (Adopted October 7, 1981 - The Hanover Insurance Company; Adopted April 14, 1982 - Massachusetts Bay Insurance Company; Adopted September 7, 2001 - Citizens Insurance Company of America)

IN WITNESS WHEREOF, THE HANOVER INSURANCE COMPANY, MASSACHUSETTS BAY INSURANCE COMPANY and CITIZENS INSURANCE COMPANY OF AMERICA have caused these presents to be sealed with their respective corporate seals, duly attested by two Vice Presidents, this **9th** day of **July 2012**.

THE HANOVER INSURANCE COMPANY
MASSACHUSETTS BAY INSURANCE COMPANY
CITIZENS INSURANCE COMPANY OF AMERICA

Robert Thomas, Vice President

Joe Brenstrom, Vice President

THE COMMONWEALTH OF MASSACHUSETTS)
COUNTY OF WORCESTER) ss.

On this **9th** day of **July 2012** before me came the above named Vice Presidents of The Hanover Insurance Company, Massachusetts Bay Insurance Company and Citizens Insurance Company of America, to me personally known to be the individuals and officers described herein, and acknowledged that the seals affixed to the preceding instrument are the corporate seals of The Hanover Insurance Company, Massachusetts Bay Insurance Company and Citizens Insurance Company of America, respectively, and that the said corporate seals and their signatures as officers were duly affixed and subscribed to said instrument by the authority and direction of said Corporations.

BARBARA A. GARLICK
Notary Public
Commonwealth of Massachusetts
My Commission Expires Sept. 21, 2018

Barbara A. Garlick, Notary Public
My Commission Expires September 21, 2018

I, the undersigned Vice President of The Hanover Insurance Company, Massachusetts Bay Insurance Company and Citizens Insurance Company of America, hereby certify that the above and foregoing is a full, true and correct copy of the Original Power of Attorney issued by said Companies, and do hereby further certify that the said Powers of Attorney are still in force and effect.

This Certificate may be signed by facsimile under and by authority of the following resolution of the Board of Directors of The Hanover Insurance Company, Massachusetts Bay Insurance Company and Citizens Insurance Company of America.

"RESOLVED, That any and all Powers of Attorney and Certified Copies of such Powers of Attorney and certification in respect thereto, granted and executed by the President or any Vice President in conjunction with any Vice President of the Company, shall be binding on the Company to the same extent as if all signatures therein were manually affixed, even though one or more of any such signatures thereon may be facsimile." (Adopted October 7, 1981 - The Hanover Insurance Company; Adopted April 14, 1982 - Massachusetts Bay Insurance Company; Adopted September 7, 2001 - Citizens Insurance Company of America)

GIVEN under my hand and the seals of said Companies, at Worcester, Massachusetts, this 9th day of September 2013.

THE HANOVER INSURANCE COMPANY
MASSACHUSETTS BAY INSURANCE COMPANY
CITIZENS INSURANCE COMPANY OF AMERICA

Glenn Margosian, Vice President

The Hanover Insurance Company, Bedford, New Hampshire
Financial Statement as of December 31, 2012

ASSETS		2012
Cash in Banks (Including Short-Term investments)		$ 30,110,655
Bonds and Stocks		$ 4,434,680,755
Other Admitted Assets		$ 1,231,711,930
Total Admitted Assets		$ 5,696,503,340

LIABILITIES, CAPITAL AND SURPLUS		
Reserve for Unearned Premiums		$ 1,314,370,812
Reserve for Loss and Loss Expense		$ 2,185,895,075
Reserve for Taxes		0
Funds held under reinsurance treaties		$ 3,157,604
Reserve for all other liabilities		$ 674,213,907
Capital Stock – $1.00 par	$ 5,000,000	
Net Surplus	$ 1,513,865,942	
Policyholders' Surplus		$ 1,518,865,942
Total Liabilities, Capital and Surplus		$ 5,696,503,340

COMMONWEALTH OF MASSACHUSETTS
COUNTY OF WORCESTER } s.s.:

Martin D. Kelly, Asst. Treasurer of The Hanover Insurance Company, being duly sworn deposes and says that he is the above described officer of said Company, and certifies that the foregoing statement is a true statement of the condition and affairs of the said Company on December 31, 2012.

MARTIN D. KELLY
Asst. Treasurer

SCHEDULE OF WORKMEN, MECHANICS AND LABORERS

The following is a list of classifications for workmen, mechanics and laborers which are anticipated to be employed in the performance of work under this contract, followed by a schedule of the prevailing wage rates and supplemental benefits for all classifications as established by the Comptroller of the City of New York.

Request for interpretation or correction under Subsection A of Section No. 3 in the Information for Bidders includes all requests for clarification of the classification of trades to be employed in the performance of the work under this contract.

In the event that a trade not listed in the classification of trades required to be used at the time of the award of the contract is in fact employed during the performance of this contract, the Contractor shall be required to obtain from the agency the prevailing wage rates and supplementary benefits for the trades used and to complete the performance of this contract at the price at which the contract was awarded.

CODE	CLASSIFICATION
15 42 001	Rigger
15 42 002	Sign Erector
16 11 001	Gardener
16 11 002	Tree Pruner
16 11 003	Tree Remover
16 11 011	Asphalt Raker (Highway & Paving)
16 11 012	Tamper (Highway & Paving)
16 11 013	Curbsetter (Highway & Paving)
16 11 014	Formsetter (Highway & Paving)
16 11 015	Rammerman (Highway & Paving)
16 11 016	Laborer (Highway & Paving)
16 11 017	ALL OTHER TITLES (Highway & Paving)
16 23 001	Laborer
16 23 002	Operating Engineer (Heavy Construction-Maintenance)
16 23 003	Junior Operating Engineer
16 23 004	Junior Operating Engineer
16 23 005	Junior Operating Engineer
16 23 006	Fireman (Heavy Construction)
16 23 007	Oiler (Heavy Construction)
16 23 051	Surveyor-Heavy Construction
16 23 052	Surveyor-Heavy Construction-Instrument Man
16 23 053	Surveyor-Heavy Construction-Rodman
16 23 057	Surveyor-Land Surveying-Party Chief
16 23 058	Surveyor-Land Surveying-Instrument Man
16 23 059	Surveyor-Land Surveying-Rodman

CODE	CLASSIFICATION
16 23 061	Operating Engineer-Road & Heavy Construction
16 23 062	Operating Engineer-Paving
16 23 063	Operating Engineer-Concrete
16 23 071	Teamster-Heavy Equipment Trailer Driver
16 23 072	Teamster-Dump Truck Driver
16 23 073	Teamster-Flat Bed Trailer Driver (3-Axle)
16 23 074	Teamster-Redi-Mix (Sand and Gravel)
16 29 011	Drill Runners
17 11 001	Plumbers
17 21 001	Painter (Brush & Roller)
17 31 001	Electrician
17 41 001	Bricklayer
17 41 002	Mason Tender
17 41 004	Cement Mason
17 42 002	Metallic Lather
17 51 001	Carpenter
17 51 002	Dock Builder
17 71 001	Cement & Concrete Worker
17 91 001	Structural Iron Worker
17 95 001	Barman
17 96 021	Derrickmen & Riggers
17 99 001	Ornamental Iron Worker
17 99 002	Sandblaster
17 99 005	Pointers (Waterproofer)
17 99 011	Welders

Each classification may include trainees depending upon project staffing schedules and as required by the terms of this contract.

LABOR LAW §220 PREVAILING WAGE SCHEDULE

Workers, Laborers and Mechanics employed on a public work project must receive not less than the prevailing rate of wage and benefits for the classification of work performed by each upon such public work. Contractors are solely responsible for maintaining original payroll records which delineate, among other things, the hours each employee worked within a given classification. Contractors using rates and/or classifications not promulgated by the Comptroller do so at their own risk. Additionally, prior to bid, Agency Chief Contracting Officers must contact the Bureau of Labor Law when the need arises for a work classification not published in this schedule.

Pursuant to Labor Law §220 (3) the Comptroller of the City of New York has promulgated this schedule solely for Workers, Laborers and Mechanics engaged by private contractors on New York City public work contracts. Contracting agencies anticipating doing work which requires the employment of a trade or classification not included in this schedule must request the Comptroller to establish a proper classification for the work pursuant to Labor Law §220 (3-a) (a). The prevailing rate schedule as promulgated by the Comptroller, must, in compliance with law, be annexed to and form part of the contract.

The appropriate schedule of prevailing wages and benefits must be posted at all public work sites pursuant to Labor Law §220 (3-a) (a).

This schedule is applicable for work performed during the effective period, unless otherwise noted. You will be notified of any changes to this schedule by addenda published on our web site at www.comptroller.nyc.gov. The rate of wages and supplemental benefits to be paid or provided are those that prevail at the time the work is being performed. Preliminary schedules for future one-year periods are published annually in the City Record on or about June 1st of each succeeding year. Final schedules are published on or about July 1st in the City Record and on our web site at www.comptroller.nyc.gov.

The Comptroller's Office has attempted to include all overtime, shift and night differential, Holiday, Saturday, Sunday or other premium time work. However, this schedule does not set forth every prevailing practice with respect to such rates with which employers must comply. All such practices are nevertheless part of the employer's prevailing wage obligation and contained in the collective bargaining agreements of the prevailing wage unions. These collective bargaining agreements are available for inspection by appointment. Requests for appointments may be made by calling (212) 669-4443, Monday through Friday between the hours of 9 a.m. and 5 p.m.

Answers to questions concerning prevailing trade practices may be obtained from the Classification Unit by calling (212) 669-7974. Please direct all other compliance issues to: Bureau of Labor Law, Attn: Wasyl Kinach, P.E., Office of the Comptroller, 1 Centre Street, Room 1122, New York, N.Y. 10007; Fax (212) 669-4002.

Prevailing rates and ratios for apprentices are attached to this schedule in the Appendix. Pursuant to Labor Law §220 (3-e), only apprentices who are individually registered in a bona fide program to which the employer contractor is a participant, registered with the New York State Department of Labor, may be employed on a public work project. Workers who are not journey persons or not registered apprentices pursuant to Labor Law §220 (3-e) may not be substituted for apprentices and must be paid as journey persons.

Prevailing Rate Schedule Information: The information below is intended to assist you in meeting your prevailing wage rate obligation.

Covered Workers: Any and all individuals who are engaged, employed or otherwise occupied as Workers, Laborers or Mechanics on the public work site.

Contractors are advised to review the applicable Collective Bargaining Agreements and the Comptroller's Prevailing Wage Schedule before bidding on Public Work. If there are any questions concerning prevailing wages, benefits, overtime, Holiday pay, shift differentials or any prevailing practice, please contact this office.

Public Work construction, reconstruction, demolition, excavation, rehabilitation, repair, renovation, alteration, or improvement contracts awarded pursuant to a Project Labor Agreement ("PLA") in accordance with Labor Law section 222 may have different labor standards for shift, premium and overtime work. Please refer to the PLA's pre-negotiated labor agreements for wage and benefit rates applicable to work performed outside of the regular workday. More information is available at the Mayor's Office of Contract Services (MOCS) web page at http://www.nyc.gov/html/mocs/html/vendors/pla.shtml.

All the provisions of Labor Law section 220 remain applicable to PLA work including, but not limited to, the enforcement of prevailing wage requirements by the Comptroller; however, we will enforce shift, premium, overtime and other non-standard rates as they appear in a project's pre-negotiated labor agreement.

Any error as to compensation under the prevailing wage law or other information as to trade classification, made by the contracting agency in the contract documents or in any other communication, will not preclude a finding against the contractor of prevailing wage violation.

In order to meet their obligation to provide prevailing supplemental benefits to each covered employee, employers must either:

1) **Provide bona-fide benefits which cost the employer no less than the prevailing supplemental benefits rate; or**
2) **Supplement the employee's hourly wage by an amount no less than the prevailing supplemental benefits rate; or**
3) **Provide a combination of bona-fide benefits and wage supplements which cost the employer no less than the prevailing supplemental benefits rate in total.**

Particular attention should be given to the supplemental benefits requirement. Although in most instances the payment or provision for supplemental benefits is for each hour worked, some classifications require the payment or provision of supplemental benefits for each hour paid. Consequently, some prevailing practices require benefits to be purchased at the overtime, shift differential, Holiday, Saturday, Sunday or other premium time rate.

Benefits are paid for *EACH HOUR WORKED* unless otherwise noted.

Wasyl Kinach, P.E.
Director of Classifications
Bureau of Labor Law

220 SCHEDULE OF PREVAILING WAGES AND SUPPLEMENTAL BENEFITS ADDENDUM
EFFECTIVE PERIOD JANUARY 1, 2013 THROUGH JUNE 30, 2013

List of Amended Classifications

1. BOILERMAKER
2. CEMENT MASON
3. DERRICKPERSON AND RIGGER
4. DRIVER: TRUCK (TEAMSTER)
5. ENGINEER - FIELD (BUILDING CONSTRUCTION)
6. ENGINEER - OPERATING
7. HEAT AND FROST INSULATOR
8. HOUSE WRECKER
9. IRON WORKER - ORNAMENTAL
10. IRON WORKER - STRUCTURAL
11. MASON TENDER
12. MASON TENDER (INTERIOR DEMOLITION WORKER)
13. MOSAIC MECHANIC
14. PAPERHANGER
15. PLASTERER
16. PLASTERER - TENDER
17. PLUMBER
18. PLUMBER (MECHNICAL EQUIPMENT AND SERVICE)
19. PLUMBER (RESIDENTIAL RATES FOR 1, 2 AND 3 FAMILY HOME CONSTRUCTION)
20. ROOFER

21. SHEET METAL WORKER

22. SIGN ERECTOR

23. STEAMFITTER

24. STEAMFITTER - REFRIGERATION AND AIR CONDITIONER

25. TILE FINISHER

26. TILE LAYER - SETTER

TABLE OF CONTENTS

ASBESTOS HANDLER
(Hazardous Material; Disturbs, removes, encapsulates, repairs, or encloses friable asbestos material)

Asbestos Handler

Effective Period: 7/1/2012 - 6/30/2013
Wage Rate per Hour: $35.10
Supplemental Benefit Rate per Hour: $14.85

Overtime
Time and one half the regular rate after an 8 hour day.
Time and one half the regular rate for Sunday.
Time and one half the regular hourly rate after 40 hours in any work week.

Overtime Holidays
Time and one half the regular rate for work on the following holiday(s).
New Year's Day
Good Friday
Memorial Day
Independence Day
Labor Day
Thanksgiving Day
Christmas Day
Easter

Paid Holidays
None

(Local #78)

BLASTER

Blaster

Effective Period: 7/1/2012 - 6/30/2013
Wage Rate per Hour: $43.20
Supplemental Benefit Rate per Hour: $37.29

Blaster (Hydraulic)

Effective Period: 7/1/2012 - 6/30/2013
Wage Rate per Hour: $43.95

Supplemental Benefit Rate per Hour: $37.29

Blaster - Trac Drill Hydraulic

Effective Period: 7/1/2012 - 6/30/2013
Wage Rate per Hour: $38.96
Supplemental Benefit Rate per Hour: $37.29

Blaster - Wagon: Air Trac: Quarry Bar: Drillrunners

Effective Period: 7/1/2012 - 6/30/2013
Wage Rate per Hour: $38.24
Supplemental Benefit Rate per Hour: $37.29

Blaster - Operators of Jack Hammers

Chippers: Spaders: Concrete Breakers: and all other pneumatic tools of like usage: Walk Behind Self Propelled Hydraulic Asphalt and Concrete Breakers: Hydro (Water) Demolition

Effective Period: 7/1/2012 - 6/30/2013
Wage Rate per Hour: $37.29
Supplemental Benefit Rate per Hour: $37.29

Blaster - Powder Carriers

Effective Period: 7/1/2012 - 6/30/2013
Wage Rate per Hour: $33.73
Supplemental Benefit Rate per Hour: $37.29

Blaster - Hydraulic Trac Drill Chuck Tender

Effective Period: 7/1/2012 - 6/30/2013
Wage Rate per Hour: $32.57
Supplemental Benefit Rate per Hour: $37.29

Blaster - Chuck Tender & Nipper

Effective Period: 7/1/2012 - 6/30/2013
Wage Rate per Hour: $31.88
Supplemental Benefit Rate per Hour: $37.29

Blaster - Magazine Keepers: (Watch Person)

Effective Period: 7/1/2012 - 6/30/2013
Wage Rate per Hour: $19.26
Supplemental Benefit Rate per Hour: $37.29

Overtime Description

For Blaster - Magazine Keepers: (Watch Person) only - time and one half the regular rate for work after an 8 hour day, Saturday, Sunday and holidays listed below.

Overtime

Double time the regular rate after an 8 hour day.
Time and one half the regular rate for Saturday.
Double time the regular rate for Sunday.

Overtime Holidays

Double time the regular rate for work on the following holiday(s).
New Year's Day
Memorial Day
Independence Day
Labor Day
Columbus Day
Presidential Election Day
Thanksgiving Day
Christmas Day

Paid Holidays

None

Shift Rates

A single shift shall be 8 hours plus an unpaid lunch, starting at 8:00 A.M (or between 6:00 A.M. and 10:00 A.M. on weekdays). When two (2) shifts are employed, each shift shall be 8 hours plus ½ hour unpaid lunch. When three (3) shifts are employed, each shift will work seven and one-half (7 ½) hours, but will be paid for eight (8) hours, since only one-half (½) hour is allowed for mealtime. When two (2) or more shifts are employed, single time will be paid for each shift. The first 8 hours of any and all work performed Monday through Friday inclusive of any off-shift shall be at the single time rate.

(Local #29)

BOILERMAKER

Boilermaker

Effective Period: 7/1/2012 - 12/31/2012
Wage Rate per Hour: $47.98
Supplemental Benefit Rate per Hour: $37.88
Supplemental Note: The above rate applies to repair or maintenance and new construction; For time and one half overtime - $56.36; For double overtime - $74.86.

Effective Period: 1/1/2013 - 3/31/2013
Wage Rate per Hour: $49.47
Supplemental Benefit Rate per Hour: $39.48

Supplemental Note: The above rate applies to repair or maintenance and new construction; For time and one half overtime - $58.78; For double overtime - $78.07.

Effective Period: 4/1/2013 - 6/30/2013
Wage Rate per Hour: $49.47
Supplemental Benefit Rate per Hour: $39.78
Supplemental Note: The above rate applies to repair or maintenance and new construction; For time and one half overtime - $59.08; For double overtime - $78.37.

Overtime Description

For Repair and Maintenance work:
Time and one half the regular rate after an 8 hour day.
Time and one half the regular rate for Saturday.
Double time the regular rate for Sunday.
For New Construction work:
Double time the regular rate after an 8 hour day.
Double time the regular time rate for Saturday.
Double time the regular rate for Sunday.

Overtime Holidays

Double time the regular rate for work on the following holiday(s).
New Year's Day
President's Day
Memorial Day
Independence Day
Columbus Day
Election Day
Veteran's Day
Thanksgiving Day
Christmas Day

Quadruple time the regular rate for work on the following holiday(s).
Labor Day

Paid Holidays

Good Friday
Day after Thanksgiving
Day before Christmas
Day before New Year's Day

Shift Rates

When shifts are required, the first shift shall work eight (8) hours at the regular straight-time hourly rate. The second shift shall work seven and one-half (7 ½) hours and receive eight hours at the regular straight time hourly rate plus twenty-five cents ($0.25) per hour. The third shift shall work seven (7) hours and receive eight hours at the regular straight time hourly rate plus fifty cents ($0.50) per hour. A thirty (30) minute lunch period shall not be considered as time worked. Work in excess of the above shall be paid overtime at the appropriate new construction work or repair work overtime wage and supplemental benefit hourly rate.

(Local #5)

BRICKLAYER

Bricklayer

Effective Period: 7/1/2012 - 6/30/2013
Wage Rate per Hour: $46.44
Supplemental Benefit Rate per Hour: $27.53

Overtime
Time and one half the regular rate after a 7 hour day.
Time and one half the regular rate for Saturday.
Double time the regular rate for Sunday.
Saturday may be used as a make-up day at straight time when a day is lost during that week to inclement weather.

Overtime Holidays
Double time the regular rate for work on the following holiday(s).
New Year's Day
Memorial Day
Independence Day
Labor Day
Thanksgiving Day
Christmas Day

Paid Holidays
None

Shift Rates
Overtime rates to be paid outside the regular scheduled work day.

(Bricklayer District Council)

CARPENTER - BUILDING COMMERCIAL

Building Commercial

Effective Period: 7/1/2012 - 6/30/2013
Wage Rate per Hour: $46.15
Supplemental Benefit Rate per Hour: $38.50

Overtime
Time and one half the regular rate after an 8 hour day.
Time and one half the regular rate for Saturday.
Double time the regular rate for Sunday.

Saturday may be used as a make-up day at straight time when a day is lost during that week to inclement weather.

Overtime Holidays

Double time the regular rate for work on the following holiday(s).
New Year's Day
Washington's Birthday
Memorial Day
Independence Day
Labor Day
Columbus Day
Presidential Election Day
Thanksgiving Day
Day after Thanksgiving
Christmas Day

Paid Holidays

None

Shift Rates

The second shift will receive one hour at the double time rate of pay for the last hour of the shift; eight hours pay for seven hours of work, nine hours pay for eight hours of work. There must be a first shift in order to work a second shift.

(Carpenters District Council)

CARPENTER - HEAVY CONSTRUCTION WORK
(Construction of Engineering Structures and Building Foundations)

Heavy Construction Work

Effective Period: 7/1/2012 - 6/30/2013
Wage Rate per Hour: $46.74
Supplemental Benefit Rate per Hour: $42.37

Overtime

Time and one half the regular rate after an 8 hour day.
Time and one half the regular rate for Saturday.
Double time the regular rate for Sunday.
Saturday may be used as a make-up day at straight time when a day is lost during that week to inclement weather.

Overtime Holidays

Double time the regular rate for work on the following holiday(s).
New Year's Day
President's Day

Memorial Day
Independence Day
Labor Day
Columbus Day
Presidential Election Day
Thanksgiving Day
Christmas Day

Paid Holidays
None

Shift Rates
Off shift work, commencing between 5:00 P.M. and 10:00 P.M. shall work eight and one half hours allowing for one half hour for lunch, but will be paid for 9 hours including benefits at the straight time rate for 8 hours.

(Carpenters District Council)

CEMENT & CONCRETE WORKER

Cement & Concrete Worker

Effective Period: 7/1/2012 - 6/30/2013
Wage Rate per Hour: $38.98
Supplemental Benefit Rate per Hour: $25.67
Supplemental Note: $28.42 on Saturdays; $31.17 on Sundays & Holidays

Overtime Description
Time and one half the regular rate after 7 hour day (time and one half the regular rate after an 8 hour day when working with Dockbuilders on pile cap forms and for work below street level to the top of the foundation wall, not to exceed 2 feet or 3 feet above the sidewalk-brick shelf, when working on the foundation and structure.)

Overtime
Time and one half the regular rate for Saturday.
Double time the regular rate for Sunday.

Overtime Holidays
Double time the regular rate for work on the following holiday(s).
New Year's Day
President's Day
Good Friday
Memorial Day
Independence Day
Labor Day
Columbus Day
Presidential Election Day
Thanksgiving Day
Christmas Day

Paid Holidays
1/2 day before Christmas Day
1/2 day before New Year's Day

Shift Rates
On shift work extending over a twenty-four hour period, all shifts are paid at straight time.

(Cement Concrete Workers District Council)

CEMENT MASON

Cement Mason

Effective Period: 7/1/2012 - 12/31/2012
Wage Rate per Hour: $42.50
Supplemental Benefit Rate per Hour: $39.06
Supplemental Note: Overtime supplemental benefit rate per hour: $57.56

Effective Period: 1/1/2013 - 6/30/2013
Wage Rate per Hour: $37.63
Supplemental Benefit Rate per Hour: $39.06
Supplemental Note: Overtime supplemental benefit rate per hour: $57.56

Overtime
Double time the regular rate after an 8 hour day.
Double time the regular time rate for Saturday.
Double time the regular rate for Sunday.

Overtime Holidays
Double time the regular rate for work on the following holiday(s).
New Year's Day
President's Day
Good Friday
Memorial Day
Independence Day
Labor Day
Columbus Day
Presidential Election Day
Thanksgiving Day
Christmas Day

Paid Holidays
Any worker who reports to work on Christmas Eve or New Year's Eve pursuant to his employer's instruction shall be entitled to three (3) hours afternoon pay without working.

Shift Rates

For an off shift day, (work at times other than the regular 7:00 A.M. to 3:30 P.M. work day) a cement mason shall be paid at the regular hourly rate plus a 25% per hour differential.

(Local #780)

CORE DRILLER

Core Driller

Effective Period: 7/1/2012 - 6/30/2013
Wage Rate per Hour: $35.44
Supplemental Benefit Rate per Hour: $19.75

Core Driller Helper

Effective Period: 7/1/2012 - 6/30/2013
Wage Rate per Hour: $28.60
Supplemental Benefit Rate per Hour: $19.75

Core Driller Helper(Third year in the industry)

Effective Period: 7/1/2012 - 6/30/2013
Wage Rate per Hour: $25.74
Supplemental Benefit Rate per Hour: $19.75

Core Driller Helper (Second year in the industry)

Effective Period: 7/1/2012 - 6/30/2013
Wage Rate per Hour: $22.88
Supplemental Benefit Rate per Hour: $19.75

Core Driller Helper (First year in the industry)

Effective Period: 7/1/2012 - 6/30/2013
Wage Rate per Hour: $20.02
Supplemental Benefit Rate per Hour: $19.75

Overtime Description

Time and one half the regular rate for work on a holiday plus Holiday pay when worked.

Overtime

Time and one half the regular rate after an 8 hour day.
Time and one half the regular rate for Saturday.

Double time the regular rate for Sunday.
Time and one half the regular rate for work on the following holiday(s).

Paid Holidays

New Year's Day
Memorial Day
Independence Day
Labor Day
Thanksgiving Day
Christmas Day

Shift Rates

The shift day shall be the continuous eight and one-half (8½) hours from 6:00 A.M. to 2:30 P.M. and from 2:30 P.M. to 11:00 P.M., including one-half (½) hour of employees regular rate of pay for lunch. When two (2) or more shifts are employed, single time shall be paid for each shift, but those employees employed on a shift other than from 8:00 A.M. to 5:00 P.M. shall, in addition, receive seventy-five cents ($0.75) per hour differential for each hour worked. When three (3) shifts are needed, each shift shall work seven and one-half (7 ½) hours paid for eight (8) hours of labor and be permitted one-half (½) hour for mealtime.

(Carpenters District Council)

DERRICKPERSON AND RIGGER

Derrick Person & Rigger

Effective Period: 7/1/2012 - 12/31/2012
Wage Rate per Hour: $40.50
Supplemental Benefit Rate per Hour: $42.07
Supplemental Note: The above supplemental rate applies for work performed in Manhattan, Bronx, Brooklyn and Queens. $43.49 - For work performed in Staten Island.

Effective Period: 1/1/2013 - 6/30/2013
Wage Rate per Hour: $41.00
Supplemental Benefit Rate per Hour: $46.07
Supplemental Note: The above supplemental rate applies for work performed in Manhattan, Bronx, Brooklyn and Queens. $47.49 - For work performed in Staten Island.

Derrick Person & Rigger - Site Work

For site work where no rigging is involved.

Effective Period: 7/1/2012 - 6/30/2013
Wage Rate per Hour: $30.00
Supplemental Benefit Rate per Hour: $31.32

Overtime Description

The first two hours of overtime on weekdays and the first seven hours of work on Saturdays are paid at time and one half for wages and supplemental benefits. All additional overtimes is paid at double time for wages and supplemental benefits. Deduct $1.42 from the Staten Island hourly benefits rate before computing overtime.

Overtime
Double time the regular rate for Sunday.

Overtime Holidays
Double time the regular rate for work on the following holiday(s).
New Year's Day
Washington's Birthday
Good Friday
Memorial Day
Independence Day
Labor Day
Thanksgiving Day
Christmas Day

Paid Holidays
1/2 day on Christmas Eve if work is performed in the A.M.

(Local #197)

DIVER

Diver (Marine)

Effective Period: 7/1/2012 - 6/30/2013
Wage Rate per Hour: $58.95
Supplemental Benefit Rate per Hour: $42.37

Diver Tender (Marine)

Effective Period: 7/1/2012 - 6/30/2013
Wage Rate per Hour: $42.10
Supplemental Benefit Rate per Hour: $42.37

Overtime
Time and one half the regular rate after an 8 hour day.
Time and one half the regular rate for Saturday.
Double time the regular rate for Sunday.
Saturday may be used as a make-up day at straight time when a day is lost during that week to inclement weather.

Overtime Holidays
Double time the regular rate for work on the following holiday(s).

New Year's Day
President's Day
Memorial Day
Independence Day
Labor Day
Columbus Day
Presidential Election Day
Thanksgiving Day
Christmas Day

Paid Holidays

None

Shift Rates

When three shifts are utilized each shift shall work seven and one half-hours (7 1/2 hours) and paid for 8 hours, allowing for one half hour for lunch.

(Carpenters District Council)

DOCKBUILDER - PILE DRIVER

Dockbuilder - Pile Driver

Effective Period: 7/1/2012 - 6/30/2013
Wage Rate per Hour: $46.74
Supplemental Benefit Rate per Hour: $42.37

Overtime

Time and one half the regular rate after an 8 hour day.
Time and one half the regular rate for Saturday.
Double time the regular rate for Sunday.
Saturday may be used as a make-up day at straight time when a day is lost during that week to inclement weather.

Overtime Holidays

Double time the regular rate for work on the following holiday(s).
New Year's Day
President's Day
Memorial Day
Independence Day
Labor Day
Columbus Day
Presidential Election Day
Thanksgiving Day
Christmas Day

Paid Holidays

None

Shift Rates

Off shift work, commencing between 5:00 P.M. and 10:00 P.M., shall work eight and one half hours allowing for one half hour for lunch but will be paid the straight time hourly wage for 9 hours and the straight time supplemental benefits for 8 hours.

(Carpenters District Council)

DRIVER: TRUCK (TEAMSTER)

Driver - Automobile Chauffeur (Dump Truck)

Effective Period: 7/1/2012 - 12/31/2012
Wage Rate per Hour: $35.84
Supplemental Benefit Rate per Hour: $36.93

Effective Period: 1/1/2013 - 6/30/2013
Wage Rate per Hour: $37.01
Supplemental Benefit Rate per Hour: $38.65

Driver - Heavy Equipment Trailer Driver

Effective Period: 7/1/2012 - 12/31/2012
Wage Rate per Hour: $37.34
Supplemental Benefit Rate per Hour: $36.93
Note: For time and one half overtime Wage Rate - $53.76; for double time overtime Wage Rate - $71.68

Effective Period: 1/1/2013 - 6/30/2013
Wage Rate per Hour: $38.51
Supplemental Benefit Rate per Hour: $38.65
Note: For time and one half overtime Wage Rate - $55.51; for double time overtime Wage Rate - $74.01

Driver - Euclid & Turnapull Operator

Effective Period: 7/1/2012 - 12/31/2012
Wage Rate per Hour: $36.41
Supplemental Benefit Rate per Hour: $36.93

Effective Period: 1/1/2013 - 6/30/2013
Wage Rate per Hour: $37.57
Supplemental Benefit Rate per Hour: $38.65

Driver - Six Wheeler(3 Axle) Tractors & Trailers

Effective Period: 7/1/2012 - 12/31/2012
Wage Rate per Hour: $36.84
Supplemental Benefit Rate per Hour: $36.93
Note: For time and one half overtime Wage Rate - $54.62; for double time overtime Wage Rate - $72.82

Effective Period: 1/1/2013 - 6/30/2013
Wage Rate per Hour: $38.01
Supplemental Benefit Rate per Hour: $38.65
Note: For time and one half overtime Wage Rate - $56.36; for double time overtime Wage Rate - $75.14

Driver - Boom Truck

Effective Period: 7/1/2012 - 12/31/2012
Wage Rate per Hour: $37.09
Supplemental Benefit Rate per Hour: $36.93
Note: For time and one half overtime Wage Rate - $54.62; for double time overtime Wage Rate - $72.82

Effective Period: 1/1/2013 - 6/30/2013
Wage Rate per Hour: $38.26
Supplemental Benefit Rate per Hour: $38.65
Note: For time and one half overtime Wage Rate - $56.36; for double time overtime Wage Rate - $75.14

Overtime Description

For Paid Holidays: Holiday pay for all holidays shall be prorated based two hours per day for each day worked in the holiday week, not to exceed 8 hours of holiday pay. For Thanksgiving week, the prorated share shall be 5 1/3 hours of holiday pay for each day worked in Thanksgiving week.

Overtime

Time and one half the regular rate after an 8 hour day.
Time and one half the regular rate for Saturday.
Double time the regular rate for Sunday.

Overtime Holidays

Double time the regular rate for work on the following holiday(s).
President's Day
Columbus Day
Veteran's Day
Day after Thanksgiving

Triple time the regular rate for work on the following holiday(s).
New Year's Day
Memorial Day
Independence Day
Labor Day
Presidential Election Day
Thanksgiving Day
Christmas Day

Paid Holidays

New Year's Day
President's Day

Memorial Day
Independence Day
Labor Day
Columbus Day
Veteran's Day
Thanksgiving Day
Day after Thanksgiving
Christmas Day

Driver - Redi-Mix Driver (Sand & Gravel)

Effective Period: 7/1/2012 - 6/30/2013
Wage Rate per Hour: $37.47
Supplemental Benefit Rate per Hour: $38.65

Overtime Description

For Paid Holidays: Employees working two (2) days in the calendar week in which the holiday falls are to paid for these holidays, provided they shape each remaining workday during that calendar week.

Overtime

Time and one half the regular rate after an 8 hour day.
Time and one half the regular rate for Saturday.
Double time the regular rate for Sunday.

Overtime Holidays

Double time the regular rate for work on the following holiday(s).
President's Day
Columbus Day
Veteran's Day

Triple time the regular rate for work on the following holiday(s).
New Year's Day
Memorial Day
Independence Day
Labor Day
Thanksgiving Day
Christmas Day

Paid Holidays

New Year's Day
President's Day
Memorial Day
Independence Day
Labor Day
Columbus Day
Veteran's Day
Thanksgiving Day
Day after Thanksgiving
Christmas Day

(Local #282)

ELECTRICIAN
(Including all low voltage cabling carrying data; video; and voice in combination with data and or video.)

Electrician "A" (Regular Day)

Effective Period: 7/1/2012 - 6/30/2013
Wage Rate per Hour: $51.00
Supplemental Benefit Rate per Hour: $42.45

Electrician "A" (Regular Day Overtime)

Effective Period: 7/1/2012 - 6/30/2013
Wage Rate per Hour: $76.50
Supplemental Benefit Rate per Hour: $45.13

Electrician "A" (Day Shift)

Effective Period: 7/1/2012 - 6/30/2013
Wage Rate per Hour: $51.00
Supplemental Benefit Rate per Hour: $42.45

Electrician "A" (Day Shift Overtime After 8 hours)

Effective Period: 7/1/2012 - 6/30/2013
Wage Rate per Hour: $76.50
Supplemental Benefit Rate per Hour: $45.13

Electrician "A" (Swing Shift)

Effective Period: 7/1/2012 - 6/30/2013
Wage Rate per Hour: $59.84
Supplemental Benefit Rate per Hour: $48.20

Electrician "A" (Swing Shift Overtime After 7.5 hours)

Effective Period: 7/1/2012 - 6/30/2013
Wage Rate per Hour: $89.76
Supplemental Benefit Rate per Hour: $51.36

Electrician "A" (Graveyard Shift)

Effective Period: 7/1/2012 - 6/30/2013
Wage Rate per Hour: $67.03
Supplemental Benefit Rate per Hour: $53.07

Electrician "A" (Graveyard Shift Overtime After 7 hours)

Effective Period: 7/1/2012 - 6/30/2013
Wage Rate per Hour: $100.55
Supplemental Benefit Rate per Hour: $56.60

Overtime

Time and one half the regular rate after a 7 hour day.
Time and one half the regular rate for Saturday.
Time and one half the regular rate for Sunday.

Overtime Holidays

Time and one half the regular rate for work on a holiday.
New Year's Day
Martin Luther King Jr. Day
President's Day
Memorial Day
Independence Day
Labor Day
Columbus Day
Veteran's Day
Thanksgiving Day
Day after Thanksgiving
Christmas Day

Paid Holidays

None

Shift Rates

When so elected by the Employer, one or more shifts of at least five days duration may be scheduled as follows: Day Shift: 8:00 am to 4:30 pm, Swing Shift 4:30 pm to 12:30 am, Graveyard Shift: 12:30 am to 8:00 am.

For multiple shifts of temporary light and/or power, the temporary light and/or power employee shall be paid for 8 hours at the straight time rate.

Electrician "M" (First 8 hours)

"M" rated work shall be defined as jobbing: electrical work of limited duration and scope, also consisting of repairs and/or replacement of electrical and tele-data equipment. Includes all work necessary to retrofit, service,

maintain and repair all kinds of lighting fixtures and local lighting controls and washing and cleaning of foregoing fixtures.

Effective Period: 7/1/2012 - 6/30/2013
Wage Rate per Hour: $25.30
Supplemental Benefit Rate per Hour: $17.52

Electrician "M" (Overtime After First 8 hours)

"M" rated work shall be defined as jobbing: electrical work of limited duration and scope, also consisting of repairs and/or replacement of electrical and tele-data equipment. Includes all work necessary to retrofit, service, maintain and repair all kinds of lighting fixtures and local lighting controls and washing and cleaning of foregoing fixtures.

Effective Period: 7/1/2012 - 6/30/2013
Wage Rate per Hour: $37.95
Supplemental Benefit Rate per Hour: $18.85

Overtime
Time and one half the regular rate after an 8 hour day.
Time and one half the regular rate for Saturday.
Time and one half the regular rate for Sunday.

Overtime Holidays
Time and one half the regular rate for work on the following holiday(s).
New Year's Day
Martin Luther King Jr. Day
President's Day
Memorial Day
Independence Day
Labor Day
Columbus Day
Veteran's Day
Thanksgiving Day
Day after Thanksgiving
Christmas Day

Paid Holidays
None

(Local #3)

ELECTRICIAN - ALARM TECHNICIAN
(Scope of Work - Inspect, test, repair, and replace defective, malfunctioning, or broken devices, components and controls of Fire, Burglar and Security Systems)

Alarm Technician

Effective Period: 7/1/2012 - 3/9/2013
Wage Rate per Hour: $29.90
Supplemental Benefit Rate per Hour: $13.70
Supplemental Note: $12.20 only after 8 hours worked in a day

Effective Period: 3/10/2013 - 6/30/2013
Wage Rate per Hour: $30.40
Supplemental Benefit Rate per Hour: $13.90
Supplemental Note: $12.40 only after 8 hours worked in a day

Overtime Description

Time and one half the regular rate for work on the following holidays: Columbus Day, Veterans Day, Day after Thanksgiving.
Double time the regular rate for work on the following holidays: New Year's day, Martin Luther King Jr. Day, President's Day, Memorial Day, Independence Day, Labor Day, Thanksgiving Day, Christmas Day.

Overtime

Time and one half the regular rate after an 8 hour day.
Time and one half the regular rate for Saturday.
Double time the regular rate for Sunday.

Paid Holidays

New Year's Day
Martin Luther King Jr. Day
President's Day
Memorial Day
Independence Day
Labor Day
Columbus Day
Veteran's Day
Thanksgiving Day
Day after Thanksgiving
Christmas Day

Shift Rates

Night Differential is based upon a ten percent (10%) differential between the hours of 4:00 P.M. and 12:30 A.M. and a fifteen percent (15%) differential for the hours 12:00 A.M. to 8:00 A.M.

Vacation

At least 1 year of employment.....ten (10) days
5 years or more of employment.....fifteen (15) days
10 years of employment.....twenty (20) days
Plus one Personal Day per year

Sick Days:
One day per Year

(Local #3)

ELECTRICIAN-STREET LIGHTING WORKER

Electrician - Electro Pole Electrician

Effective Period: 7/1/2012 - 6/30/2013
Wage Rate per Hour: $51.00
Supplemental Benefit Rate per Hour: $44.18

Electrician - Electro Pole Foundation Installer

Effective Period: 7/1/2012 - 6/30/2013
Wage Rate per Hour: $38.66
Supplemental Benefit Rate per Hour: $34.12

Electrician - Electro Pole Maintainer

Effective Period: 7/1/2012 - 6/30/2013
Wage Rate per Hour: $33.10
Supplemental Benefit Rate per Hour: $30.84

Overtime Description

Electrician - Electro Pole Electrician: Time and one half the regular rate after a 7 hour day and after 5 consecutive days worked per week.
Electrician - Electro Pole Foundation Installer: Time and one half the regular rate after 8 hours within a 24 hour period and Saturday and Sunday.
Electrician - Electro Pole Maintainer: Time and one half the regular rate after a 7 hour day and after 5 consecutive days worked per week. Saturdays and Sundays may be used as a make-up day at straight time when a day is lost during the week to inclement weather.

Overtime Holidays

Time and one half the regular rate for work on the following holiday(s).
New Year's Day
Martin Luther King Jr. Day
President's Day
Memorial Day
Independence Day
Labor Day
Columbus Day
Veteran's Day
Thanksgiving Day
Day after Thanksgiving
Christmas Day

Paid Holidays

None

(Local #3)

ELEVATOR CONSTRUCTOR

Elevator Constructor

Effective Period: 7/1/2012 - 3/16/2013
Wage Rate per Hour: $55.20
Supplemental Benefit Rate per Hour: $32.78

Effective Period: 3/17/2013 - 6/30/2013
Wage Rate per Hour: $57.01
Supplemental Benefit Rate per Hour: $34.48

Overtime Description

For New Construction: work performed after 7 or 8 hour day, Saturday, Sunday or between 4:30pm and 7:00am shall be paid at double time rate.

Existing buildings: work performed after an 8 hour day, Saturday, Sunday or between 5:30pm and 7:00 am shall be paid time and one half.

Overtime

Double time the regular rate for work on the following holiday(s).

Paid Holidays

New Year's Day
President's Day
Good Friday
Memorial Day
Independence Day
Labor Day
Columbus Day
Veteran's Day
Thanksgiving Day
Day after Thanksgiving
Christmas Day

Vacation

Employer contributes 8% of regular basic hourly rate as vacation pay for employees with more than 15 years of service, and 6% for employees with 5 to 15 years of service, and 4% for employees with less than 5 years of service.

(Local #1)

ELEVATOR REPAIR & MAINTENANCE

Elevator Service/Modernization Mechanic

Effective Period: 7/1/2012 - 3/16/2013
Wage Rate per Hour: $43.79
Supplemental Benefit Rate per Hour: $31.37

Effective Period: 3/17/2013 - 6/30/2013
Wage Rate per Hour: $45.14
Supplemental Benefit Rate per Hour: $33.02

Overtime Description
For Service Work: Double time - all work performed on Sundays, Holidays, and between midnight and 7:00am.

Overtime
Time and one half the regular rate after an 8 hour day.
Time and one half the regular rate for Saturday.
Time and one half the regular rate for Sunday.
Time and one half the regular rate for work on a holiday plus the day's pay.

Paid Holidays
New Year's Day
President's Day
Good Friday
Memorial Day
Independence Day
Labor Day
Columbus Day
Veteran's Day
Thanksgiving Day
Day after Thanksgiving
Christmas Day

Shift Rates
For Modernization Work (4pm to 12:30am) - regularly hourly rate plus a (15%) fifteen percent differential.

Vacation
Employer contributes 8% of regular basic hourly rate as vacation pay for employees with more than 15 years of service, and 6% for employees with 5 to 15 years of service, and 4% for employees with less than 5 years of service.

(Local #1)

ENGINEER

Engineer - Heavy Construction Operating Engineer I

Cherrypickers 20 tons and over and Loaders (rubber tired and/or tractor type with a manufacturer's minimum rated capacity of six cubic yards and over).

Effective Period: 7/1/2012 - 6/30/2013
Wage Rate per Hour: $58.75
Supplemental Benefit Rate per Hour: $31.07
Supplemental Note: $55.74 on overtime
Shift Wage Rate: $94.00

Engineer - Heavy Construction Operating Engineer II

Backhoes, Basin Machines, Groover, Mechanical Sweepers, Bobcat, Boom Truck, Barrier Transport (Barrier Mover) & machines of similar nature. Operation of Churn Drills and machines of a similar nature, Stetco Silent Hoist and machines of similar nature, Vac-Alls, Meyers Machines, John Beam and machines of a similar nature, Ross Carriers and Travel Lifts and machines of a similar nature, Bulldozers, Scrapers and Turn-a-Pulls: Tugger Hoists (Used exclusively for handling excavated material); Tractors with attachments, Hyster and Roustabout Cranes, Cherrypickers. Austin Western, Grove and machines of a similar nature, Scoopmobiles, Monorails, Conveyors, Trenchers: Loaders-Rubber Tired and Tractor: Barber Greene and Eimco Loaders and Eimco Backhoes; Mighty Midget and similar breakers and Tampers, Curb and Gutter Pavers and Motor Patrol, Motor Graders and all machines of a similar nature. Locomotives 10 Tons or under. Mini-Max, Break-Tech and machines of a similar nature; Milling machines, robotic and demolition machines and machines of a similar nature, shot blaster, skid steer machines and machines of a similar nature including bobcat, pile rig rubber-tired excavator (37,000 lbs. and under), 2 man auger.

Effective Period: 7/1/2012 - 6/30/2013
Wage Rate per Hour: $57.00
Supplemental Benefit Rate per Hour: $31.07
Supplemental Note: $55.74 on overtime
Shift Wage Rate: $91.20

Engineer - Heavy Construction Maintenance Engineer I

Installing, Repairing, Maintaining, Dismantling and Manning of all equipment including Steel Cutting, Bending and Heat Sealing Machines, Mechanical Heaters, Grout Pumps, Bentonite Pumps & Plants, Screening Machines, Fusion Coupling Machines, Tunnel Boring Machines Moles and Machines of a similar nature, Power Packs, Mechanical Hydraulic Jacks; all drill rigs including but not limited to Churn, Rotary Caisson, Raised Bore & Drills of a similar nature; Personnel, Inspection & Safety Boats or any boats used to perform functions of same, Mine Hoists, Whirlies, all Climbing Cranes, all Tower Cranes, including but not limited to Truck Mounted and Crawler Type and machines of similar nature; Maintaining Hydraulic Drills and machines of a similar nature; Well Point System-Installation and dismantling; Burning, Welding, all Pumps regardless of size and/or motor power, except River Cofferdam Pumps and Wells Point Pumps; Motorized Buggies (three or more); equipment used in the cleaning and televising of sewers, but not limited to jet-rodder/vacuum truck, vacall/vactor, closed circuit television inspection equipment; high powered water pumps, jet pumps; screed machines and concrete finishing machines of a similar nature; vermeers.

Effective Period: 7/1/2012 - 6/30/2013
Wage Rate per Hour: $56.74
Supplemental Benefit Rate per Hour: $31.07
Supplemental Note: $55.74 on overtime
Shift Wage Rate: $90.78

Engineer - Heavy Construction Maintenance Engineer II

On Base Mounted Tower Cranes

Effective Period: 7/1/2012 - 6/30/2013
Wage Rate per Hour: $74.44
Supplemental Benefit Rate per Hour: $31.07
Supplemental Note: $55.74 on overtime
Shift Wage Rate: $119.10

Engineer - Heavy Construction Maintenance Engineer III

On Generators, Light Towers

Effective Period: 7/1/2012 - 6/30/2013
Wage Rate per Hour: $37.56
Supplemental Benefit Rate per Hour: $31.07
Supplemental Note: $55.74 on overtime
Shift Wage Rate: $60.10

Engineer - Heavy Construction Maintenance Engineer IV

On Pumps and Mixers including mud sucking

Effective Period: 7/1/2012 - 6/30/2013
Wage Rate per Hour: $38.53
Supplemental Benefit Rate per Hour: $31.07
Supplemental Note: $55.74 on overtime
Shift Wage Rate: $61.65

Engineer - Heavy Construction Operating Engineer III

Minor Equipment such as Tractors, Post Hole Diggers, Ditch Witch (Walk Behind), Road Finishing Machines, Rollers five tons and under, Tugger Hoists, Dual Purpose Trucks, Fork Lifts, and Dempsey Dumpers, Fireperson.

Effective Period: 7/1/2012 - 6/30/2013
Wage Rate per Hour: $54.09
Supplemental Benefit Rate per Hour: $31.07
Supplemental Note: $55.74 on overtime
Shift Wage Rate: $86.54

Engineer - Heavy Construction Oilers I

Gradalls, Cold Planer Grader, Concrete Pumps, Driving Truck Cranes, Driving and Operating Fuel and Grease Trucks.

Effective Period: 7/1/2012 - 6/30/2013
Wage Rate per Hour: $51.19

Supplemental Benefit Rate per Hour: $31.07
Supplemental Note: $55.74 on overtime
Shift Wage Rate: $81.90

Engineer - Heavy Construction Oilers II

All gasoline, electric, diesel or air operated Shovels, Draglines, Backhoes, Keystones, Pavers, Gunite Machines, Battery of Compressors, Crawler Cranes, two-person Trenching Machines.

Effective Period: 7/1/2012 - 6/30/2013
Wage Rate per Hour: $35.50
Supplemental Benefit Rate per Hour: $31.07
Supplemental Note: $55.74 on overtime
Shift Wage Rate: $56.80

Engineer - Steel Erection Maintenance Engineers

Derrick, Travelers, Tower, Crawler Tower and Climbing Cranes

Effective Period: 7/1/2012 - 6/30/2013
Wage Rate per Hour: $54.33
Supplemental Benefit Rate per Hour: $29.66
Supplemental Note: $53.17 on overtime
Shift Wage Rate: $86.93

Engineer - Steel Erection Oiler I

On a Truck Crane

Effective Period: 7/1/2012 - 6/30/2013
Wage Rate per Hour: $50.91
Supplemental Benefit Rate per Hour: $29.66
Supplemental Note: $53.17 on overtime
Shift Wage Rate: $81.46

Engineer - Steel Erection Oiler II

On a Crawler Crane

Effective Period: 7/1/2012 - 6/30/2013
Wage Rate per Hour: $39.04
Supplemental Benefit Rate per Hour: $29.66
Supplemental Note: $53.17 on overtime
Shift Wage Rate: $62.46

Overtime Description

On jobs of more than one shift, if the next shift employee fails to report for work through any cause over which the employer has no control, the employee on duty who works the next shift continues to work at the single time rate.

Overtime

Double time the regular rate after an 8 hour day.
Double time the regular time rate for Saturday.
Double time the regular rate for Sunday.
Double time the regular rate for work on the following holiday(s).

Paid Holidays

New Year's Day
Lincoln's Birthday
President's Day
Memorial Day
Independence Day
Labor Day
Columbus Day
Election Day
Veteran's Day
Thanksgiving Day
Christmas Day
Employees must work at least one day in the payroll week in which the holiday occurs to receive the paid holiday

---

Engineer - Building Work Maintenance Engineers I

Installing, repairing, maintaining, dismantling (of all equipment including: Steel Cutting and Bending Machines, Mechanical Heaters, Mine Hoists, Climbing Cranes, Tower Cranes, Linden Peine, Lorain, Liebherr, Mannes, or machines of a similar nature, Well Point Systems, Deep Well Pumps, Concrete Mixers with loading Device, Concrete Plants, Motor Generators when used for temporary power and lights), skid steer machines of a similar nature including bobcat.

Effective Period: 7/1/2012 - 6/30/2013
Wage Rate per Hour: $51.62
Supplemental Benefit Rate per Hour: $29.66
Supplemental Note: $53.17 on overtime

Engineer - Building Work Maintenance Engineers II

On Pumps, Generators, Mixers and Heaters

Effective Period: 7/1/2012 - 6/30/2013
Wage Rate per Hour: $40.34
Supplemental Benefit Rate per Hour: $29.66
Supplemental Note: $53.17 on overtime

Engineer - Building Work Oilers I

All gasoline, electric, diesel or air operated Gradealls: Concrete Pumps, Overhead Cranes in Power Houses: Their duties shall be to assist the Engineer in oiling, greasing and repairing of all machines; Driving Truck

Cranes: Driving and Operating Fuel and Grease Trucks, Cherrypickers (hydraulic cranes) over 70,000 GVW, and machines of a similar nature.

Effective Period: 7/1/2012 - 6/30/2013
Wage Rate per Hour: $49.12
Supplemental Benefit Rate per Hour: $29.66
Supplemental Note: $53.17 on overtime

Engineer - Building Work Oilers II

Oilers on Crawler Cranes, Backhoes, Trenching Machines, Gunite Machines, Compressors (three or more in Battery).

Effective Period: 7/1/2012 - 6/30/2013
Wage Rate per Hour: $36.75
Supplemental Benefit Rate per Hour: $29.66
Supplemental Note: $53.17 on overtime

Overtime Description

On jobs of more than one shift, if an Employee fails to report for work through any cause over which the Employer has no control, the Employee on duty will continue to work at the rate of single time.

Overtime

Double time the regular rate after an 8 hour day.
Double time the regular time rate for Saturday.
Double time the regular rate for Sunday.
Double time the regular rate for work on the following holiday(s).

Paid Holidays

New Year's Day
Lincoln's Birthday
President's Day
Memorial Day
Independence Day
Labor Day
Columbus Day
Veteran's Day
Thanksgiving Day
Christmas Day
Employees must work at least one day in the payroll week in which the holiday occurs to receive the paid holiday

Shift Rates

Off Shift: double time the regular hourly rate.

(Local #15)

ENGINEER - CITY SURVEYOR AND CONSULTANT

Party Chief

Effective Period: 7/1/2012 - 6/30/2013
Wage Rate per Hour: $34.61
Supplemental Benefit Rate per Hour: $17.30

Instrument Person

Effective Period: 7/1/2012 - 6/30/2013
Wage Rate per Hour: $28.59
Supplemental Benefit Rate per Hour: $17.30

Rodperson

Effective Period: 7/1/2012 - 6/30/2013
Wage Rate per Hour: $24.79
Supplemental Benefit Rate per Hour: $17.30

Overtime Description

Overtime Benefit Rate - $23.63 per hour (time & one half) $29.95 per hour (double time).
Time and one half the regular rate after an 8 hour day, Time and one half the regular rate for Saturday for the first eight hours worked, Double time the regular time rate for Saturday for work performed in excess of eight hours, Double time the regular rate for Sunday and Double time the regular rate for work on a holiday.

Paid Holidays

New Year's Day
Lincoln's Birthday
President's Day
Memorial Day
Independence Day
Labor Day
Columbus Day
Veteran's Day
Thanksgiving Day
Day after Thanksgiving
Christmas Day
Employees must work at least one day in the payroll week in which the holiday occurs to receive the paid holiday

(Operating Engineer Local #15-D)

ENGINEER - FIELD (BUILDING CONSTRUCTION)
(Construction of Building Projects, Concrete Superstructures, etc.)

Field Engineer - BC Party Chief

Effective Period: 7/1/2012 - 12/31/2012
Wage Rate per Hour: $53.64
Supplemental Benefit Rate per Hour: $26.95
Supplemental Note: Overtime Benefit Rate - $37.48 per hour (time & one half) $48.00 per hour (double time).

Effective Period: 1/1/2013 - 6/30/2013
Wage Rate per Hour: $55.74
Supplemental Benefit Rate per Hour: $29.73
Supplemental Note: Overtime Benefit Rate - $41.40 per hour (time & one half) $53.06 per hour (double time).

Field Engineer - BC Instrument Person

Effective Period: 7/1/2012 - 12/31/2012
Wage Rate per Hour: $41.94
Supplemental Benefit Rate per Hour: $26.95
Supplemental Note: Overtime Benefit Rate - $37.48 per hour (time & one half) $48.00 per hour (double time).

Effective Period: 1/1/2013 - 6/30/2013
Wage Rate per Hour: $43.30
Supplemental Benefit Rate per Hour: $29.73
Supplemental Note: Overtime Benefit Rate - $41.40 per hour (time & one half) $53.06 per hour (double time).

Field Engineer - BC Rodperson

Effective Period: 7/1/2012 - 12/31/2012
Wage Rate per Hour: $27.52
Supplemental Benefit Rate per Hour: $26.95
Supplemental Note: Overtime Benefit Rate - $37.48 per hour (time & one half) $48.00 per hour (double time).

Effective Period: 1/1/2013 - 6/30/2013
Wage Rate per Hour: $27.97
Supplemental Benefit Rate per Hour: $29.73
Supplemental Note: Overtime Benefit Rate - $41.40 per hour (time & one half) $53.06 per hour (double time).

Overtime Description

Time and one half the regular rate after a 7 hour work and time and one half the regular rate for Saturday for the first seven hours worked, Double time the regular time rate for Saturday for work performed in excess of seven hours, Double time the regular rate for Sunday and Double time the regular rate for work on a holiday.

Paid Holidays

New Year's Day
President's Day
Good Friday
Memorial Day
Independence Day
Labor Day
Columbus Day
Veteran's Day

Thanksgiving Day
Christmas Day
Employees must work at least one day in the payroll week in which the holiday occurs to receive the paid holiday

(Operating Engineer Local #15-D)

ENGINEER - FIELD (HEAVY CONSTRUCTION)
(Construction of Roads, Tunnels, Bridges, Sewers, Building Foundations, Engineering Structures etc.)

Field Engineer - HC Party Chief

Effective Period: 7/1/2012 - 6/30/2013
Wage Rate per Hour: $60.28
Supplemental Benefit Rate per Hour: $29.73
Supplemental Note: Overtime benefit rate - $41.40 per hour (time & one half), $53.06 per hour (double time).

Field Engineer - HC Instrument Person

Effective Period: 7/1/2012 - 6/30/2013
Wage Rate per Hour: $44.28
Supplemental Benefit Rate per Hour: $29.73
Supplemental Note: Overtime benefit rate - $41.40 per hour (time & one half), $53.06 per hour (double time).

Field Engineer - HC Rodperson

Effective Period: 7/1/2012 - 6/30/2013
Wage Rate per Hour: $37.11
Supplemental Benefit Rate per Hour: $29.73
Supplemental Note: Overtime benefit rate - $41.40 per hour (time & one half), $53.06 per hour (double time).

Overtime Description

Time and one half the regular rate after an 8 hour day, Time and one half the regular rate for Saturday for the first eight hours worked, Double time the regular time rate for Saturday for work performed in excess of eight hours, Double time the regular rate for Sunday and Double time the regular rate for work on a holiday.

Paid Holidays

New Year's Day
Lincoln's Birthday
President's Day
Memorial Day
Independence Day
Labor Day
Columbus Day
Veteran's Day

Thanksgiving Day
Christmas Day
Employees must work at least one day in the payroll week in which the holiday occurs to receive the paid holiday

(Operating Engineer Local #15-D)

ENGINEER - FIELD (STEEL ERECTION)

Field Engineer - Steel Erection Party Chief

Effective Period: 7/1/2012 - 6/30/2013
Wage Rate per Hour: $54.50
Supplemental Benefit Rate per Hour: $26.95
Supplemental Note: Overtime benefit rate - $37.48 per hour (time & one half), $48.00 per hour (double time).

Field Engineer - Steel Erection Instrument Person

Effective Period: 7/1/2012 - 6/30/2013
Wage Rate per Hour: $42.63
Supplemental Benefit Rate per Hour: $26.95
Supplemental Note: Overtime benefit rate - $37.48 per hour (time & one half), $48.00 per hour (double time).

Field Engineer - Steel Erection Rodperson

Effective Period: 7/1/2012 - 6/30/2013
Wage Rate per Hour: $28.84
Supplemental Benefit Rate per Hour: $26.95
Supplemental Note: Overtime benefit rate - $37.48 per hour (time & one half), $48.00 per hour (double time).

Overtime Description

Time and one half the regular rate for Saturday for the first eight hours worked.
Double time the regular rate for Saturday for work performed in excess of eight hours.

Overtime

Time and one half the regular rate after an 8 hour day.
Double time the regular rate for Sunday.
Double time the regular rate for work on the following holiday(s).

Paid Holidays

New Year's Day
Lincoln's Birthday
President's Day
Memorial Day
Independence Day
Labor Day
Columbus Day

Veteran's Day
Thanksgiving Day
Christmas Day
Employees must work at least one day in the payroll week in which the holiday occurs to receive the paid holiday

(Operating Engineer Local #15-D)

ENGINEER - OPERATING

Operating Engineer - Road & Heavy Construction I

Back Filling Machines, Cranes, Mucking Machines and Dual Drum Paver.

Effective Period: 7/1/2012 - 6/30/2013
Wage Rate per Hour: $64.38
Supplemental Benefit Rate per Hour: $28.65
Supplemental Note: $51.85 overtime hours
Shift Wage Rate: $103.01

Operating Engineer - Road & Heavy Construction II

Backhoes, Power Shovels, Hydraulic Clam Shells, Steel Erection, Moles and machines of a similar nature.

Effective Period: 7/1/2012 - 6/30/2013
Wage Rate per Hour: $66.70
Supplemental Benefit Rate per Hour: $28.65
Supplemental Note: 51.85 overtime hours
Shift Wage Rate: $106.72

Operating Engineer - Road & Heavy Construction III

Mine Hoists, Cranes, etc. (Used as Mine Hoists)

Effective Period: 7/1/2012 - 6/30/2013
Wage Rate per Hour: $68.86
Supplemental Benefit Rate per Hour: $28.65
Supplemental Note: $51.85 overtime hours
Shift Wage Rate: $110.18

Operating Engineer - Road & Heavy Construction IV

Gradealls, Keystones, Cranes on land or water (with digging buckets), Bridge Cranes, Vermeer Cutter and machines of a similar nature, Trenching Machines.

Effective Period: 7/1/2012 - 6/30/2013
Wage Rate per Hour: $67.21

Supplemental Benefit Rate per Hour: $28.65
Supplemental Note: $51.85 overtime hours
Shift Wage Rate: $107.54

Operating Engineer - Road & Heavy Construction V

Pile Drivers & Rigs (employing Dock Builder foreperson): Derrick Boats, Tunnel Shovels.

Effective Period: 7/1/2012 - 6/30/2013
Wage Rate per Hour: $65.86
Supplemental Benefit Rate per Hour: $28.65
Supplemental Note: $51.85 overtime hours
Shift Wage Rate: $105.38

Operating Engineer - Road & Heavy Construction VI

Mixers (Concrete with loading attachment), Concrete Pavers, Cableways, Land Derricks, Power Houses (Low Air Pressure Units).

Effective Period: 7/1/2012 - 6/30/2013
Wage Rate per Hour: $62.51
Supplemental Benefit Rate per Hour: $28.65
Supplemental Note: $51.85 overtime hours
Shift Wage Rate: $100.02

Operating Engineer - Road & Heavy Construction VII

Barrier Movers , Barrier Transport and Machines of a Similar Nature.

Effective Period: 7/1/2012 - 6/30/2013
Wage Rate per Hour: $50.27
Supplemental Benefit Rate per Hour: $28.65
Supplemental Note: $51.85 overtime hours
Shift Wage Rate: $80.43

Operating Engineer - Road & Heavy Construction VIII

Utility Compressors

Effective Period: 7/1/2012 - 12/31/2012
Wage Rate per Hour: $36.37
Supplemental Benefit Rate per Hour: $28.65
Supplemental Note: $51.85 overtime hours
Shift Wage Rate: $46.38

Effective Period: 1/1/2013 - 6/30/2013
Wage Rate per Hour: $38.78
Supplemental Benefit Rate per Hour: $28.65
Supplemental Note: $51.85 overtime hours

Shift Wage Rate: $49.16

Operating Engineer - Road & Heavy Construction IX

Horizontal Boring Rig

Effective Period: 7/1/2012 - 12/31/2012
Wage Rate per Hour: $56.24
Supplemental Benefit Rate per Hour: $28.65
Supplemental Note: $51.85 overtime hours
Shift Wage Rate: $89.98

Effective Period: 1/1/2013 - 6/30/2013
Wage Rate per Hour: $59.39
Supplemental Benefit Rate per Hour: $28.65
Supplemental Note: $51.85 overtime hours
Shift Wage Rate: $95.02

Operating Engineer - Road & Heavy Construction X

Elevators (manually operated as personnel hoist).

Effective Period: 7/1/2012 - 6/30/2013
Wage Rate per Hour: $54.50
Supplemental Benefit Rate per Hour: $28.65
Supplemental Note: $51.85 overtime hours
Shift Wage Rate: $87.20

Operating Engineer - Road & Heavy Construction XI

Compressors (Portable 3 or more in battery), Driving of Truck Mounted Compressors, Well-point Pumps, Tugger Machines Well Point Pumps, Churn Drill.

Effective Period: 7/1/2012 - 6/30/2013
Wage Rate per Hour: $42.11
Supplemental Benefit Rate per Hour: $28.65
Supplemental Note: $51.85 overtime hours
Shift Wage Rate: $67.38

Operating Engineer - Road & Heavy Construction XII

All Drills and Machines of a similar nature.

Effective Period: 7/1/2012 - 6/30/2013
Wage Rate per Hour: $63.18
Supplemental Benefit Rate per Hour: $28.65
Supplemental Note: $51.85 overtime hours
Shift Wage Rate: $101.09

Operating Engineer - Road & Heavy Construction XIII

Concrete Pumps, Concrete Plant, Well Drilling Machines, Stone Crushers, Double Drum Hoist, Power Houses (other than above).

Effective Period: 7/1/2012 - 6/30/2013
Wage Rate per Hour: $61.14
Supplemental Benefit Rate per Hour: $28.65
Supplemental Note: $51.85 overtime hours
Shift Wage Rate: $97.82

Operating Engineer - Road & Heavy Construction XIV

Concrete Mixer

Effective Period: 7/1/2012 - 6/30/2013
Wage Rate per Hour: $58.34
Supplemental Benefit Rate per Hour: $28.65
Supplemental Note: $51.85 overtime hours
Shift Wage Rate: $93.49

Operating Engineer - Road & Heavy Construction XV

Compressors (Portable Single or two in Battery, not over 100 feet apart), Pumps (River Cofferdam) and Welding Machines, Push Button Machines, All Engines Irrespective of Power (Power-Pac) used to drive auxiliary equipment, Air, Hydraulic, etc.

Effective Period: 7/1/2012 - 6/30/2013
Wage Rate per Hour: $39.03
Supplemental Benefit Rate per Hour: $28.65
Supplemental Note: $51.85 overtime hours
Shift Wage Rate: $62.45

Operating Engineer - Road & Heavy Construction XVI

Concrete Breaking Machines, Single Drum Hoists, Locomotives (over ten tons) and Dinkies over ten tons, Hydraulic Crane-Second Engineer.

Effective Period: 7/1/2012 - 6/30/2013
Wage Rate per Hour: $55.73
Supplemental Benefit Rate per Hour: $28.65
Supplemental Note: $51.85 overtime hours
Shift Wage Rate: $89.17

Operating Engineer - Road & Heavy Construction XVII

On-Site concrete plant engineer, On-site Asphalt Plant Engineer, and Vibratory console.

Effective Period: 7/1/2012 - 6/30/2013
Wage Rate per Hour: $56.19
Supplemental Benefit Rate per Hour: $28.65
Supplemental Note: $51.85 overtime hours
Shift Wage Rate: $89.90

Operating Engineer - Road & Heavy Construction XVIII

Tower Crane

Effective Period: 7/1/2012 - 6/30/2013
Wage Rate per Hour: $81.09
Supplemental Benefit Rate per Hour: $28.65
Supplemental Note: $51.85 overtime hours
Shift Wage Rate: $129.74

Operating Engineer - Paving I

Asphalt Spreaders, Autogrades (C.M.I.), Roto/Mil

Effective Period: 7/1/2012 - 12/31/2012
Wage Rate per Hour: $59.25
Supplemental Benefit Rate per Hour: $28.65
Supplemental Note: $51.85 overtime hours
Shift Wage Rate: $94.80

Effective Period: 1/1/2013 - 6/30/2013
Wage Rate per Hour: $62.51
Supplemental Benefit Rate per Hour: $28.65
Supplemental Note: $51.85 overtime hours
Shift Wage Rate: $100.02

Operating Engineer - Paving II

Asphalt Roller

Effective Period: 7/1/2012 - 12/31/2012
Wage Rate per Hour: $57.65
Supplemental Benefit Rate per Hour: $28.65
Supplemental Note: $51.85 overtime hours
Shift Wage Rate: $92.24

Effective Period: 1/1/2013 - 6/30/2013
Wage Rate per Hour: $60.85
Supplemental Benefit Rate per Hour: $28.65
Supplemental Note: $51.85 overtime hours
Shift Wage Rate: $97.36

Operating Engineer - Paving III

Asphalt Plants

Effective Period: 7/1/2012 - 12/31/2012
Wage Rate per Hour: $48.46
Supplemental Benefit Rate per Hour: $28.65
Supplemental Note: $51.85 overtime hours
Shift Wage Rate: $77.54

Effective Period: 1/1/2013 - 6/30/2013
Wage Rate per Hour: $51.32
Supplemental Benefit Rate per Hour: $28.65
Supplemental Note: $51.85 overtime hours
Shift Wage Rate: $82.11

Operating Engineer - Concrete I

Cranes

Effective Period: 7/1/2012 - 6/30/2013
Wage Rate per Hour: $63.49
Supplemental Benefit Rate per Hour: $28.65
Supplemental Note: $51.85 overtime hours

Operating Engineer - Concrete II

Compressors

Effective Period: 7/1/2012 - 6/30/2013
Wage Rate per Hour: $36.91
Supplemental Benefit Rate per Hour: $28.65
Supplemental Note: $51.85 overtime hours

Operating Engineer - Concrete III

Micro-traps (Negative Air Machines), Vac-All Remediation System.

Effective Period: 7/1/2012 - 6/30/2013
Wage Rate per Hour: $50.31
Supplemental Benefit Rate per Hour: $28.65
Supplemental Note: $51.85 overtime hours

Operating Engineer - Steel Erection I

Three Drum Derricks

Effective Period: 7/1/2012 - 12/31/2012

Wage Rate per Hour: $67.62
Supplemental Benefit Rate per Hour: $28.65
Supplemental Note: $51.85 overtime hours
Shift Wage Rate: $108.19

Effective Period: 1/1/2013 - 6/30/2013
Wage Rate per Hour: $70.50
Supplemental Benefit Rate per Hour: $28.65
Supplemental Note: $51.85 overtime hours
Shift Wage Rate: $112.80

Operating Engineer - Steel Erection II

Cranes, 2 Drum Derricks, Hydraulic Cranes and Fork Lifts.

Effective Period: 7/1/2012 - 12/31/2012
Wage Rate per Hour: $64.91
Supplemental Benefit Rate per Hour: $28.65
Supplemental Note: $51.85 overtime hours
Shift Wage Rate: $103.86

Effective Period: 1/1/2013 - 6/30/2013
Wage Rate per Hour: $67.71
Supplemental Benefit Rate per Hour: $28.65
Supplemental Note: $51.85 overtime hours
Shift Wage Rate: $108.34

Operating Engineer - Steel Erection III

Compressors, Welding Machines.

Effective Period: 7/1/2012 - 12/31/2012
Wage Rate per Hour: $37.87
Supplemental Benefit Rate per Hour: $28.65
Supplemental Note: $51.85 overtime hours
Shift Wage Rate: $60.59

Effective Period: 1/1/2013 - 6/30/2013
Wage Rate per Hour: $39.86
Supplemental Benefit Rate per Hour: $28.65
Supplemental Note: $51.85 overtime hours
Shift Wage Rate: $63.78

Operating Engineer - Steel Erection IV

Compressors - Not Combined with Welding Machine.

Effective Period: 7/1/2012 - 12/31/2012
Wage Rate per Hour: $36.00

Supplemental Benefit Rate per Hour: $28.65
Supplemental Note: $51.85 overtime hours
Shift Wage Rate: $57.60

Effective Period: 1/1/2013 - 6/30/2013
Wage Rate per Hour: $37.93
Supplemental Benefit Rate per Hour: $28.65
Supplemental Note: $51.85 overtime hours
Shift Wage Rate: $60.69

Operating Engineer - Building Work I

Forklifts, House Cars, Rack and Pinion, Plaster (Platform machine), Plaster Bucket, Concrete Pump and all other equipment used for hoisting material.

Effective Period: 7/1/2012 - 12/31/2012
Wage Rate per Hour: $53.09
Supplemental Benefit Rate per Hour: $28.65
Supplemental Note: $51.85 overtime hours

Effective Period: 1/1/2013 - 6/30/2013
Wage Rate per Hour: $55.46
Supplemental Benefit Rate per Hour: $28.65
Supplemental Note: $51.85 overtime hours

Operating Engineer - Building Work II

Compressors, Welding Machines (Cutting Concrete-Tank Work), Paint Spraying, Sandblasting, Pumps (with the exclusion of Concrete Pumps), House Car (settlement basis only), All Engines irrespective of Power (Power-Pac) used to drive Auxiliary Equipment, Air, Hydraulic, etc.

Effective Period: 7/1/2012 - 12/31/2012
Wage Rate per Hour: $39.35
Supplemental Benefit Rate per Hour: $28.65
Supplemental Note: $51.85 overtime hours

Effective Period: 1/1/2013 - 6/30/2013
Wage Rate per Hour: $41.32
Supplemental Benefit Rate per Hour: $28.65
Supplemental Note: $51.85 overtime hours

Operating Engineer - Building Work III

Double Drum

Effective Period: 7/1/2012 - 12/31/2012
Wage Rate per Hour: $60.66
Supplemental Benefit Rate per Hour: $28.65
Supplemental Note: $51.85 overtime hours

Effective Period: 1/1/2013 - 6/30/2013
Wage Rate per Hour: $63.25
Supplemental Benefit Rate per Hour: $28.65
Supplemental Note: $51.85 overtime hours

Operating Engineer - Building Work IV

Stone Derrick, Cranes, Hydraulic Cranes Boom Trucks.

Effective Period: 7/1/2012 - 12/31/2012
Wage Rate per Hour: $64.35
Supplemental Benefit Rate per Hour: $28.65
Supplemental Note: $51.85 overtime hours

Effective Period: 1/1/2013 - 6/30/2013
Wage Rate per Hour: $67.05
Supplemental Benefit Rate per Hour: $28.65
Supplemental Note: $51.85 overtime hours

Operating Engineer - Building Work V

Dismantling and Erection of Cranes, Relief Engineer.

Effective Period: 7/1/2012 - 12/31/2012
Wage Rate per Hour: $59.17
Supplemental Benefit Rate per Hour: $28.65
Supplemental Note: $51.85 overtime hours

Effective Period: 1/1/2013 - 6/30/2013
Wage Rate per Hour: $61.72
Supplemental Benefit Rate per Hour: $28.65
Supplemental Note: $51.85 overtime hours

Operating Engineer - Building Work VI

4 Pole Hoist, Single Drum Hoists.

Effective Period: 7/1/2012 - 12/31/2012
Wage Rate per Hour: $58.53
Supplemental Benefit Rate per Hour: $28.65
Supplemental Note: $51.85 overtime hours

Effective Period: 1/1/2013 - 6/30/2013
Wage Rate per Hour: $61.06
Supplemental Benefit Rate per Hour: $28.65
Supplemental Note: $51.85 overtime hours

Overtime Description

On jobs of more than one shift, if an Employee fails to report for work through any cause over which the Employer has no control, the Employee on duty will continue to work at the rate of single time.

Overtime

Double time the regular rate after an 8 hour day.
Double time the regular time rate for Saturday.
Double time the regular rate for Sunday.
Double time the regular rate for work on the following holiday(s).

Paid Holidays

New Year's Day
Lincoln's Birthday
President's Day
Memorial Day
Independence Day
Labor Day
Columbus Day
Veteran's Day
Thanksgiving Day
Day after Thanksgiving
Christmas Day
Employees must work at least one day in the payroll week in which the holiday occurs to receive the paid holiday

Shift Rates

Shifts may be worked at the single time rate at other than the regular working hours (8:00 A.M. to 4:30 P.M.) on the following work ONLY: Heavy construction jobs on work below the street level, over railroad tracks and on building jobs.

(Operating Engineer Local #14)

FLOOR COVERER
(Interior vinyl composition tile, sheath vinyl linoleum and wood parquet tile including site preparation and synthetic turf not including site preparation)

Floor Coverer

Effective Period: 7/1/2012 - 6/30/2013
Wage Rate per Hour: $46.15
Supplemental Benefit Rate per Hour: $38.50

Overtime

Time and one half the regular rate after an 8 hour day.
Time and one half the regular rate for Saturday.
Double time the regular rate for Sunday.

Overtime Holidays

Double time the regular rate for work on the following holiday(s).
New Year's Day
President's Day
Memorial Day
Independence Day
Labor Day
Columbus Day
Presidential Election Day
Thanksgiving Day
Day after Thanksgiving
Christmas Day

Paid Holidays

1/2 day on Christmas Eve if work is performed in the A.M.
1/2 day on New Year's Eve if work is performed in the A.M.

Shift Rates

Two shifts may be utilized with the first shift working 8:00 A.M. to the end of the shift at the straight time of pay. The second shift will receive one hour at double time rate for the last hour of the shift. (eight for seven, nine for eight).

(Carpenters District Council)

GLAZIER
(New Construction, Remodeling, and Alteration)

Glazier

Effective Period: 7/1/2012 - 10/31/2012
Wage Rate per Hour: $40.00
Supplemental Benefit Rate per Hour: $32.89
Supplemental Note: Supplemental Benefit Overtime Rate: $40.54

Effective Period: 11/1/2012 - 6/30/2013
Wage Rate per Hour: $40.50
Supplemental Benefit Rate per Hour: $33.24
Supplemental Note: Supplemental Benefit Overtime Rate: $41.24

Overtime Description

An optional 8th hour can be worked at straight time rate. If 9th hour is worked, then both hours or more (8th & 9th or more) will be at the double time rate of pay.

Overtime

Double time the regular rate after a 7 hour day.

Double time the regular time rate for Saturday.
Double time the regular rate for Sunday.

Overtime Holidays

Double time the regular rate for work on the following holiday(s).
New Year's Day
President's Day
Memorial Day
Independence Day
Labor Day
Thanksgiving Day
Day after Thanksgiving
Christmas Day

Paid Holidays

None

Shift Rates

Shifts shall be any 7 hours beyond 4:00 P.M. for which the glazier shall receive 8 hours pay for 7 hours worked.

(Local #1281)

GLAZIER - REPAIR & MAINTENANCE

(For the Installation of Glass - All repair and maintenance work on a particular building, whenever performed, where the total cumulative contract value is under $105,000. Except where enumerated (i.e. plate glass windows) does not apply to non-residential buildings.)

Craft Jurisdiction for repair, maintenance and fabrication

Plate glass replacement, Residential glass replacement, Residential mirrors and shower doors, Storm windows and storm doors, Residential replacement windows, Herculite door repairs, Door closer repairs, Retrofit apartment house (non commercial buildings), Glass tinting.

Effective Period: 7/1/2012 - 4/30/2013
Wage Rate per Hour: $23.40
Supplemental Benefit Rate per Hour: $18.04

Effective Period: 5/1/2013 - 6/30/2013
Wage Rate per Hour: $23.50
Supplemental Benefit Rate per Hour: $18.54

Overtime

Time and one half the regular rate after an 8 hour day.

Double time the regular rate for Sunday.
Time and one half the regular hourly rate after 40 hours in any work week.

Paid Holidays

New Year's Day
President's Day
Memorial Day
Independence Day
Labor Day
Thanksgiving Day
Day after Thanksgiving
Christmas Day

(Local #1281)

HEAT AND FROST INSULATOR

Heat & Frost Insulator

Effective Period: 7/1/2012 - 12/31/2012
Wage Rate per Hour: $54.28
Supplemental Benefit Rate per Hour: $31.36

Effective Period: 1/1/2013 - 6/30/2013
Wage Rate per Hour: $55.98
Supplemental Benefit Rate per Hour: $32.36

Overtime Description

Double time shall be paid for supplemental benefits during overtime work.
8th hour paid at time and one half.

Overtime

Double time the regular rate after an 8 hour day.
Double time the regular time rate for Saturday.
Double time the regular rate for Sunday.

Overtime Holidays

Double time the regular rate for work on the following holiday(s).
New Year's Day
Martin Luther King Jr. Day
President's Day
Memorial Day
Independence Day
Columbus Day
Veteran's Day
Thanksgiving Day
Day after Thanksgiving

Christmas Day

Triple time the regular rate for work on the following holiday(s).
Labor Day

Paid Holidays
None

Shift Rates
The first shift shall work seven hours at the regular straight time rate. The second and third shift shall work seven hours the regular straight time hourly rate plus a fourteen percent wage and benefit premium.
Off hour work in occupied or retail buildings may be worked on weekdays with an increment of $1.00 per hour and eight hours pay for seven (7) hours worked. Double time will apply for over seven (7) hours worked on weekdays, weekends or holidays.

(Local #12)

HOUSE WRECKER (TOTAL DEMOLITION)

House Wrecker - Tier A

On all work sites the first, second, eleventh and every third House Wrecker thereafter shall be Tier A House Wreckers (i.e. 1st, 2nd, 11th, 14th etc). The 10th and 20th House Wrecker shall be apprentices. Other House Wreckers shall be Tier B House Wreckers.

Effective Period: 7/1/2012 - 12/31/2012
Wage Rate per Hour: $33.00
Supplemental Benefit Rate per Hour: $24.15

Effective Period: 1/1/2013 - 6/30/2013
Wage Rate per Hour: $33.51
Supplemental Benefit Rate per Hour: $24.64

House Wrecker - Tier B

On all work sites the first, second, eleventh and every third House Wrecker thereafter shall be Tier A House Wreckers (i.e. 1st, 2nd, 11th, 14th etc). The 10th and 20th House Wrecker shall be apprentices. Other House Wreckers shall be Tier B House Wreckers.

Effective Period: 7/1/2012 - 12/31/2012
Wage Rate per Hour: $23.05
Supplemental Benefit Rate per Hour: $17.85

Effective Period: 1/1/2013 - 6/30/2013

Wage Rate per Hour: $23.25
Supplemental Benefit Rate per Hour: $18.35

Overtime
Time and one half the regular rate after an 8 hour day.
Time and one half the regular rate for Saturday.
Double time the regular rate for Sunday.

Overtime Holidays
Double time the regular rate for work on the following holiday(s).
New Year's Day
President's Day
Memorial Day
Independence Day
Labor Day
Thanksgiving Day
Christmas Day

Paid Holidays
None

(Mason Tenders District Council)

IRON WORKER - ORNAMENTAL

Iron Worker - Ornamental

Effective Period: 7/1/2012 - 12/31/2012
Wage Rate per Hour: $41.50
Supplemental Benefit Rate per Hour: $39.52
Supplemental Note: Supplemental benefits are to be paid at the applicable overtime rate when overtime is in effect.

Effective Period: 1/1/2013 - 6/30/2013
Wage Rate per Hour: $42.00
Supplemental Benefit Rate per Hour: $42.89
Supplemental Note: Supplemental benefits are to be paid at the applicable overtime rate when overtime is in effect.

Overtime Description
Time and one half the regular rate after a 7 hour day for a maximum of two hours on any regular work day (the 8th and 9th hour) and double time shall be paid for all work on a regular work day thereafter, time and one half the regular rate for Saturday for the first seven hours of work and double time shall be paid for all work on a Saturday thereafter.

Overtime

Double time the regular rate for Sunday.

Overtime Holidays

Double time the regular rate for work on the following holiday(s).
New Year's Day
President's Day
Memorial Day
Independence Day
Labor Day
Thanksgiving Day
Christmas Day

Paid Holidays

None

Shift Rates

For off shift work - 8 hours pay for 7 hours of work. When two or three shifts are employed on a job, Monday through Friday, the workday for each shift shall be seven hours and paid for ten and one-half hours at the single time rate. When two or three shifts are worked on Saturday, Sunday or holidays, each shift shall be seven hours and paid fifteen and three-quarters hours.

(Local #580)

IRON WORKER - STRUCTURAL

Iron Worker - Structural

Effective Period: 7/1/2012 - 12/31/2012
Wage Rate per Hour: $45.05
Supplemental Benefit Rate per Hour: $57.85
Supplemental Note: Supplemental benefits are to be paid at the applicable overtime rate when overtime is in effect.

Effective Period: 1/1/2013 - 6/30/2013
Wage Rate per Hour: $46.00
Supplemental Benefit Rate per Hour: $61.23
Supplemental Note: Supplemental benefits are to be paid at the applicable overtime rate when overtime is in effect.

Overtime Description

Monday through Friday- the first eight hours are paid at straight time, the 9th and 10th hours are paid at time and one-half the regular rate, all additional weekday overtime is paid at double the regular rate. Saturdays- the first eight hours are paid at time and one-half the regular rate, double time thereafter. Sunday-all shifts are paid at double time.

Overtime

Time and one half the regular rate after an 8 hour day.

Time and one half the regular rate for Saturday.
Double time the regular rate for Sunday.

Overtime Holidays

Double time the regular rate for work on the following holiday(s).
New Year's Day
Good Friday
Memorial Day
Independence Day
Labor Day
Thanksgiving Day
Christmas Day

Paid Holidays

1/2 day on Christmas Eve if work is performed in the A.M.
1/2 day on New Year's Eve if work is performed in the A.M.

Shift Rates

Monday through Friday - First Shift: First eight hours are paid at straight time, the 9th & 10th hours are paid at time and a half, double time paid thereafter. Second and third Shifts: First eight hours are paid at time and one-half, double time thereafter. Saturdays: All shifts, first eight hours paid at time and one-half, double time thereafter: Sunday all shifts are paid at double time.

(Local #40 & #361)

LABORER
(Foundation, Concrete, Excavating, Street Pipe Layer and Common)

Laborer

Excavation and foundation work for buildings, heavy construction, engineering work, and hazardous waste removal in connection with the above work. Landscaping tasks in connection with heavy construction work, engineering work and building projects. Projects include, but are not limited to pollution plants, sewers, parks, subways, bridges, highways, etc.

Effective Period: 7/1/2012 - 6/30/2013
Wage Rate per Hour: $38.70
Supplemental Benefit Rate per Hour: $31.75

Overtime

Time and one half the regular rate after an 8 hour day.
Time and one half the regular rate for Saturday.
Double time the regular rate for Sunday.

Overtime Holidays

Double time the regular rate for work on the following holiday(s).

New Year's Day
Memorial Day
Independence Day
Labor Day
Columbus Day
Presidential Election Day
Thanksgiving Day
Christmas Day

Paid Holidays

Labor Day
Thanksgiving Day

Shift Rates

When two shifts are employed, single time rate shall be paid for each shift. When three shifts are found necessary, each shift shall work seven and one half hours (7 ½), but shall be paid for eight (8) hours of labor, and be permitted one half hour for lunch.

(Local #731)

LANDSCAPING

(Landscaping tasks, as well as tree pruning, tree removing, spraying and maintenance in connection with the planting of street trees and the planting of trees in city parks but not when such activities are performed as part of, or in connection with, other construction or reconstruction projects.)

Landscaper (Above 6 years experience)

Effective Period: 7/1/2012 - 6/30/2013
Wage Rate per Hour: $24.25
Supplemental Benefit Rate per Hour: $12.30

Landscaper (3 - 6 years experience)

Effective Period: 7/1/2012 - 6/30/2013
Wage Rate per Hour: $23.25
Supplemental Benefit Rate per Hour: $12.30

Landscaper (up to 3 years experience)

Effective Period: 7/1/2012 - 6/30/2013
Wage Rate per Hour: $20.75
Supplemental Benefit Rate per Hour: $12.30

Groundperson

Effective Period: 7/1/2012 - 6/30/2013
Wage Rate per Hour: $20.75
Supplemental Benefit Rate per Hour: $12.30

Tree Remover / Pruner

Effective Period: 7/1/2012 - 6/30/2013
Wage Rate per Hour: $29.25
Supplemental Benefit Rate per Hour: $12.30

Landscaper Sprayer (Pesticide Applicator)

Effective Period: 7/1/2012 - 6/30/2013
Wage Rate per Hour: $19.25
Supplemental Benefit Rate per Hour: $12.30

Watering - Plant Maintainer

Effective Period: 7/1/2012 - 6/30/2013
Wage Rate per Hour: $14.25
Supplemental Benefit Rate per Hour: $12.30

Overtime Description

For all overtime work performed, supplemental benefits shall include an additional seventy-five ($0.75) cents per hour.

Overtime

Time and one half the regular rate after an 8 hour day.
Time and one half the regular rate for Saturday.
Double time the regular rate for Sunday.
Time and one half the regular rate for work on a holiday plus the day's pay.

Paid Holidays

New Year's Day
Memorial Day
Independence Day
Labor Day
Thanksgiving Day
Christmas Day

Shift Rates

Work performed on a 4pm to 12am shift has a 15% differential. Work performed on a 12am to 8am shift has a 20% differential.

(Local #175)

MARBLE MECHANIC

Marble Setter

Effective Period: 7/1/2012 - 6/30/2013
Wage Rate per Hour: $49.19
Supplemental Benefit Rate per Hour: $32.24

Marble Finisher

Effective Period: 7/1/2012 - 6/30/2013
Wage Rate per Hour: $39.05
Supplemental Benefit Rate per Hour: $31.43

Marble Polisher

Effective Period: 7/1/2012 - 6/30/2013
Wage Rate per Hour: $34.73
Supplemental Benefit Rate per Hour: $24.60

Overtime Description

Supplemental Benefit contributions are to be made at the applicable overtime rates. Time and one half the regular rate after a 7 hour day or time and one half the regular rate after an 8 hour day - chosen by Employer at the start of the project and then would last for the full duration of the project.

Overtime

Time and one half the regular rate for Saturday.
Double time the regular rate for Sunday.

Overtime Holidays

Double time the regular rate for work on the following holiday(s).
New Year's Day
President's Day
Good Friday
Memorial Day
Independence Day
Labor Day
Columbus Day
Veteran's Day
Thanksgiving Day
Day after Thanksgiving
Christmas Day

Paid Holidays

None

(Local #7)

MASON TENDER

Mason Tender

Effective Period: 7/1/2012 - 12/31/2012
Wage Rate per Hour: $34.24
Supplemental Benefit Rate per Hour: $24.40

Effective Period: 1/1/2013 - 6/30/2013
Wage Rate per Hour: $34.50
Supplemental Benefit Rate per Hour: $25.14

Overtime
Time and one half the regular rate after an 8 hour day.
Time and one half the regular rate for Saturday.
Double time the regular rate for Sunday.
Saturday may be used as a make-up day at straight time when a day is lost during that week to inclement weather.

Overtime Holidays
Double time the regular rate for work on the following holiday(s).
New Year's Day
President's Day
Memorial Day
Independence Day
Labor Day
Thanksgiving Day
Christmas Day

Paid Holidays
None

Shift Rates
The Employer may work two (2) shifts with the first shift at the straight time wage rate and the second shift receiving eight (8) hours paid for seven (7) hours work at the straight time wage rate.

(Local #79)

MASON TENDER (INTERIOR DEMOLITION WORKER)
(The erection, building, moving, servicing and dismantling of enclosures, scaffolding, barricades, protection and site safety structures etc., on Interior Demolition jobs.)

Mason Tender Tier A

Effective Period: 7/1/2012 - 12/31/2012
Wage Rate per Hour: $33.87
Supplemental Benefit Rate per Hour: $19.22

Effective Period: 1/1/2013 - 6/30/2013
Wage Rate per Hour: $34.07
Supplemental Benefit Rate per Hour: $19.77

Mason Tender Tier B

On Interior Demolition job sites 33 1/3 % of the employees shall be classified as Tier A Interior Demolition Workers and 66 2/3 % shall be classified as Tier B Interior Demolition Workers; provided that the employer may employ more than 33 1/3 % Tier A Interior Demolition Workers on the job site. Where the number of employees on a job site is not divisible by 3, the first additional employee (above the number of employees divisible by three) shall be a Tier B Interior Demolition Worker, and the second additional employee shall be a Tier A Interior Demolition Worker.

Effective Period: 7/1/2012 - 12/31/2012
Wage Rate per Hour: $23.07
Supplemental Benefit Rate per Hour: $13.53

Effective Period: 1/1/2013 - 6/30/2013
Wage Rate per Hour: $23.27
Supplemental Benefit Rate per Hour: $14.08

Overtime
Time and one half the regular rate after an 8 hour day.
Time and one half the regular rate for Sunday.

Overtime Holidays
Double time the regular rate for work on the following holiday(s).
New Year's Day
President's Day
Memorial Day
Independence Day
Labor Day
Thanksgiving Day
Christmas Day

Paid Holidays
None

(Local #79)

METALLIC LATHER

Metallic Lather

Effective Period: 7/1/2012 - 6/30/2013
Wage Rate per Hour: $41.23
Supplemental Benefit Rate per Hour: $38.35
Supplemental Note: Supplemental benefits for overtime are paid at the appropriate overtime rate.

Overtime Description

Overtime would be time and one half the regular rate after a seven (7) or eight (8) hours workday, which would be set at the start of the job.

Overtime

Time and one half the regular rate for Saturday.
Double time the regular rate for Sunday.

Overtime Holidays

Double time the regular rate for work on the following holiday(s).
New Year's Day
Washington's Birthday
Good Friday
Memorial Day
Independence Day
Labor Day
Columbus Day
Presidential Election Day
Thanksgiving Day
Christmas Day

Paid Holidays

1/2 day on Christmas Eve if work is performed in the A.M.
1/2 day on New Year's Eve if work is performed in the A.M.

Shift Rates

There shall be either two (2) or three (3) shifts, each shift shall be eight (8) hours with nine (9) hours pay, including one half (½) hour for lunch. Off-Hour Start shall commence after 3:30 P.M. and shall conclude by 6:00 A.M. The first consecutive seven (7) hours shall be at straight time with a differential of twelve dollars ($12.00) per hour. Fringes shall be paid at the straight time rate.

(Local #46)

MILLWRIGHT

Millwright

Effective Period: 7/1/2012 - 6/30/2013
Wage Rate per Hour: $46.19
Supplemental Benefit Rate per Hour: $45.67

Overtime
Time and one half the regular rate after an 8 hour day.
Time and one half the regular rate for Saturday.
Double time the regular rate for Sunday.
Saturday may be used as a make-up day at straight time when a day is lost during that week to inclement weather.

Overtime Holidays
Double time the regular rate for work on the following holiday(s).
New Year's Day
President's Day
Good Friday
Memorial Day
Independence Day
Labor Day
Columbus Day
Presidential Election Day
Thanksgiving Day
Christmas Day

Paid Holidays
1/2 day on Christmas Eve if work is performed in the A.M.
1/2 day on New Year's Eve if work is performed in the A.M.

Shift Rates
The first shift shall receive the straight time rate of pay. The second shift receives the straight time rate of pay plus fifteen (15%) per cent. Members of the second shift shall be allowed one half hour to eat, with this time being included in the hours of the workday established. There must be a first shift to work a second shift. All additional hours worked shall be paid at the time and one-half rate of pay plus fifteen (15%) per cent for weekday hours.

(Local #740)

MOSAIC MECHANIC

Mosaic Mechanic - Mosaic & Terrazzo Mechanic

Effective Period: 7/1/2012 - 12/31/2012

Wage Rate per Hour: $43.93
Supplemental Benefit Rate per Hour: $33.08
Supplemental Note: Supplemental benefits for overtime to be paid at the rate of $44.05 per hour.

Effective Period: 1/1/2013 - 6/30/2013
Wage Rate per Hour: $44.39
Supplemental Benefit Rate per Hour: $35.12
Supplemental Note: Supplemental benefits for overtime to be paid at the rate of $46.09 per hour.

Mosaic Mechanic - Mosaic & Terrazzo Finisher

Effective Period: 7/1/2012 - 12/31/2012
Wage Rate per Hour: $42.36
Supplemental Benefit Rate per Hour: $33.08
Supplemental Note: Supplemental benefits for overtime to be paid at the rate of $44.05 per hour.

Effective Period: 1/1/2013 - 6/30/2013
Wage Rate per Hour: $42.78
Supplemental Benefit Rate per Hour: $35.11
Supplemental Note: Supplemental benefits for overtime to be paid at the rate of $46.08 per hour.

Mosaic Mechanic - Machine Operator Grinder

Effective Period: 7/1/2012 - 12/31/2012
Wage Rate per Hour: $42.36
Supplemental Benefit Rate per Hour: $33.08
Supplemental Note: Supplemental benefits for overtime to be paid at the rate of $44.05 per hour.

Effective Period: 1/1/2013 - 6/30/2013
Wage Rate per Hour: $42.78
Supplemental Benefit Rate per Hour: $35.11
Supplemental Note: Supplemental benefits for overtime to be paid at the rate of $46.08 per hour.

Overtime

Time and one half the regular rate after a 7 hour day.
Time and one half the regular rate for Saturday.
Double time the regular rate for Sunday.

Overtime Holidays

Double time the regular rate for work on the following holiday(s).
New Year's Day
Washington's Birthday
Good Friday
Independence Day
Labor Day
Columbus Day
Veteran's Day
Thanksgiving Day
Day after Thanksgiving
Christmas Day

Paid Holidays
None

(Local #7)

PAINTER

Painter - Brush & Roller

Effective Period: 7/1/2012 - 10/31/2012
Wage Rate per Hour: $35.50
Supplemental Benefit Rate per Hour: $25.12
Supplemental Note: $29.75 on overtime

Effective Period: 11/1/2012 - 4/30/2013
Wage Rate per Hour: $36.00
Supplemental Benefit Rate per Hour: $25.12
Supplemental Note: $29.75 on overtime

Effective Period: 5/1/2013 - 6/30/2013
Wage Rate per Hour: $37.50
Supplemental Benefit Rate per Hour: $25.12
Supplemental Note: $29.75 on overtime

Spray & Scaffold / Decorative / Sandblast

Effective Period: 7/1/2012 - 10/31/2012
Wage Rate per Hour: $38.50
Supplemental Benefit Rate per Hour: $25.12
Supplemental Note: $29.75 on overtime

Effective Period: 11/1/2012 - 4/30/2013
Wage Rate per Hour: $39.00
Supplemental Benefit Rate per Hour: $25.12
Supplemental Note: $29.75 on overtime

Effective Period: 5/1/2013 - 6/30/2013
Wage Rate per Hour: $40.50
Supplemental Benefit Rate per Hour: $25.12
Supplemental Note: $29.75 on overtime

Overtime
Time and one half the regular rate after a 7 hour day.
Time and one half the regular rate for Saturday.
Time and one half the regular rate for Sunday.

Overtime Holidays

Time and one half the regular rate for work on the following holiday(s).
New Year's Day
President's Day
Memorial Day
Independence Day
Labor Day
Columbus Day
Thanksgiving Day
Christmas Day

Paid Holidays

None

(District Council of Painters #9)

PAINTER - SIGN

Designer

Effective Period: 7/1/2012 - 6/30/2013
Wage Rate per Hour: $36.15
Supplemental Benefit Rate per Hour: $9.66

Journeyperson

Effective Period: 7/1/2012 - 6/30/2013
Wage Rate per Hour: $33.62
Supplemental Benefit Rate per Hour: $9.66

Overtime

Time and one half the regular rate after an 8 hour day.
Time and one half the regular rate for Saturday.
Time and one half the regular rate for Sunday.
Double time the regular rate for work on the following holiday(s).

Paid Holidays

New Year's Day
President's Day
Memorial Day
Independence Day
Labor Day
Columbus Day
Election Day
Thanksgiving Day
Day after Thanksgiving

Christmas Day

Shift Rates

All work performed outside the regular 8 hour work day (either 7:00 A.M to 3:30 P.M or 8:00 A.M. to 4:30 P.M) shall be paid at time and one half the regular hourly rate.

(Local #8A-28A)

PAINTER - STRIPER

Striper (paint)

Effective Period: 7/1/2012 - 6/30/2013
Wage Rate per Hour: $33.00
Supplemental Benefit Rate per Hour: $11.52
Supplemental Note: Overtime Supplemental Benefit rate - $7.42; New Hire Rate (0-3 months) - $0.00

Lineperson (thermoplastic)

Effective Period: 7/1/2012 - 6/30/2013
Wage Rate per Hour: $37.00
Supplemental Benefit Rate per Hour: $11.52
Supplemental Note: Overtime Supplemental Benefit rate - $7.42; New Hire Rate (0-3 months) - $0.00

Overtime

Time and one half the regular rate after an 8 hour day.
Time and one half the regular rate for Saturday.
Double time the regular rate for Sunday.
Time and one half the regular rate for work on the following holiday(s).

Paid Holidays

New Year's Day
Good Friday
Memorial Day
Independence Day
Labor Day
Columbus Day
Presidential Election Day
Thanksgiving Day
Day after Thanksgiving
Christmas Day

Shift Rates

Employees hired before April 1, 2003: 15% night shift premium differential for work commenced at 9:00 PM or later.

Vacation

Employees with one to two years service shall accrue vacation based on hours worked: 250 hours worked - 1 day vacation; 500 hours worked - 2 days vacation; 750 hours worked - 3 days vacation; 900 hours worked - 4 days vacation; 1,000 hours worked - 5 days vacation. Employees with two to five years service receive two weeks vacation. Employees with five to twenty years service receive three weeks vacation. Employees with twenty to twenty-five years service receive four weeks vacation. Employees with 25 or more years service receive five weeks vacation. Vacation must be taken during winter months. 2 Personal Days except employees hired after 4/1/12 who do not have 2 years of service.

(Local #917)

PAINTER - STRUCTURAL STEEL

Painters on Structural Steel

Effective Period: 7/1/2012 - 9/30/2012
Wage Rate per Hour: $46.25
Supplemental Benefit Rate per Hour: $31.58

Effective Period: 10/1/2012 - 6/30/2013
Wage Rate per Hour: $47.00
Supplemental Benefit Rate per Hour: $32.08

Painter - Power Tool

Effective Period: 7/1/2012 - 9/30/2012
Wage Rate per Hour: $52.25
Supplemental Benefit Rate per Hour: $31.58

Effective Period: 10/1/2012 - 6/30/2013
Wage Rate per Hour: $53.00
Supplemental Benefit Rate per Hour: $32.08

Overtime

Time and one half the regular rate after a 7 hour day.
Time and one half the regular rate for Saturday.
Time and one half the regular rate for Sunday.

Overtime Holidays

Double time the regular rate for work on the following holiday(s).
New Year's Day
Memorial Day
Independence Day
Labor Day
Thanksgiving Day
Christmas Day

Paid Holidays
None

Shift Rates
Regular hourly rates plus a ten per cent (10%) differential

(Local #806)

PAPERHANGER

Paperhanger

Effective Period: 7/1/2012 - 4/30/2013
Wage Rate per Hour: $37.44
Supplemental Benefit Rate per Hour: $29.23
Supplemental Note: Supplemental benefits are to be paid at the appropriate straight time and overtime rate.

Effective Period: 5/1/2013 - 6/30/2013
Wage Rate per Hour: $39.00
Supplemental Benefit Rate per Hour: $29.23
Supplemental Note: Supplemental benefits are to be paid at the appropriate straight time and overtime rate.

Overtime
Time and one half the regular rate after a 7 hour day.
Time and one half the regular rate for Saturday.
Time and one half the regular rate for Sunday.

Overtime Holidays
Time and one half the regular rate for work on the following holiday(s).
New Year's Day
President's Day
Memorial Day
Independence Day
Labor Day
Thanksgiving Day
Day after Thanksgiving
Christmas Day

Paid Holidays
None

Shift Rates
Evening shift - 4:30 P.M. to 12:00 Midnight (regular rate of pay); any work performed before 7:00 A.M. shall be at time and one half the regular base rate of pay.

(District Council of Painters #9)

PAVER AND ROADBUILDER

Paver & Roadbuilder - Formsetter

Effective Period: 7/1/2012 - 6/30/2013
Wage Rate per Hour: $42.86
Supplemental Benefit Rate per Hour: $32.15

Paver & Roadbuilder - Laborer

Paving and road construction work, regardless of material used, including but not limited to preparation of job sites, removal of old surfaces, asphalt and/or concrete, by whatever method, including but not limited to milling; laying of concrete; laying of asphalt for temporary, patchwork, and utility paving (but not production paving); site preparation and incidental work before the installation of rubberized materials and similar surfaces; installation and repair of temporary construction fencing; slurry seal coating, maintenance of safety surfaces; play equipment installation, and other related work.

Effective Period: 7/1/2012 - 6/30/2013
Wage Rate per Hour: $38.99
Supplemental Benefit Rate per Hour: $32.15

Production Paver & Roadbuilder - Screed Person

(Production paving is asphalt paving when using a paving machine or on a project where a paving machine is traditionally used)

Adjustment of paving machinery on production paving jobs.

Effective Period: 7/1/2012 - 6/30/2013
Wage Rate per Hour: $45.00
Supplemental Benefit Rate per Hour: $32.15

Production Paver & Roadbuilder - Raker

Effective Period: 7/1/2012 - 6/30/2013
Wage Rate per Hour: $44.49
Supplemental Benefit Rate per Hour: $32.15

Production Paver & Roadbuilder - Shoveler

General laborer (except removal of surfaces - see Paver and Roadbuilder-Laborer) including but not limited to tamper, AC paint and liquid tar work.

Effective Period: 7/1/2012 - 6/30/2013
Wage Rate per Hour: $41.20

Supplemental Benefit Rate per Hour: $32.15

Overtime Description

Veteran's Day is a Paid Holiday for employees working on production paving.

If an employee works New Year's Day or Christmas Day, they receive the single time rate plus 15%, except if an employee works on production paving on New Year's Day or Christmas Day, they receive the single time rate plus one day's pay for the holiday worked.

Employees who work on a holiday listed below receive the straight time rate plus one day's pay for the holiday.

Overtime

Time and one half the regular rate after an 8 hour day.
Time and one half the regular rate for Saturday.
Double time the regular rate for Sunday.

Paid Holidays

Memorial Day
Independence Day
Labor Day
Columbus Day
Election Day
Thanksgiving Day

Shift Rates

When two shifts are employed, the work period for each shift shall be a continuous eight (8) hours. When three shifts are employed, each shift will work seven and one half (7 ½) hours but will be paid for eight (8) hours since only one half (1/2) hour is allowed for meal time.
When two or more shifts are employed, single time will be paid for each shift.

Night Work - On night work, the first eight (8) hours of work will be paid for at fifteen percent (15%) over the single time rate, except that production paving work shall be paid at 25% over the single time rate. Hours worked over eight (8) hours during said shift shall be paid for at the time and one-half rate.

(Local #1010)

PLASTERER

Plasterer

Effective Period: 7/1/2012 - 12/31/2012
Wage Rate per Hour: $40.78
Supplemental Benefit Rate per Hour: $26.80

Effective Period: 1/1/2013 - 6/30/2013
Wage Rate per Hour: $40.78
Supplemental Benefit Rate per Hour: $27.55

Overtime

Time and one half the regular rate after a 7 hour day.
Time and one half the regular rate for Saturday.
Double time the regular rate for Sunday.
Saturday may be used as a make-up day at straight time when a day is lost during that week to inclement weather.

Overtime Holidays

Double time the regular rate for work on the following holiday(s).
New Year's Day
Martin Luther King Jr. Day
President's Day
Good Friday
Memorial Day
Independence Day
Labor Day
Columbus Day
Presidential Election Day
Thanksgiving Day
Christmas Day

Paid Holidays

None

Shift Rates

When it is not possible to conduct alteration work during regular work hours, in a building occupied by tenants, said work shall proceed on a shift basis: however work over seven (7) hours in any twenty four (24) hour period, the time after seven (7) hours shall be considered overtime.
The second shift shall start at a time between 3:30 p.m. and 7:00 p.m. and shall consist of seven (7) working hours and shall receive eight (8) hours of wages and benefits at the straight time rate. The workers on the second shift shall be allowed one-half (½) hour to eat with this time being included in the seven (7) hours of work.

(Local #530)

PLASTERER - TENDER

Plasterer - Tender

Effective Period: 7/1/2012 - 12/31/2012
Wage Rate per Hour: $34.24
Supplemental Benefit Rate per Hour: $24.40

Effective Period: 1/1/2013 - 6/30/2013
Wage Rate per Hour: $34.50
Supplemental Benefit Rate per Hour: $25.14

Overtime
Time and one half the regular rate after an 8 hour day.
Time and one half the regular rate for Saturday.
Double time the regular rate for Sunday.
Saturday may be used as a make-up day at straight time when a day is lost during that week to inclement weather.

Overtime Holidays
Double time the regular rate for work on the following holiday(s).
New Year's Day
Washington's Birthday
Memorial Day
Independence Day
Labor Day
Presidential Election Day
Thanksgiving Day
Christmas Day

Paid Holidays
None

Shift Rates
When work commences outside regular work hours, workers receive an hour additional (differential) wage and supplement payment. Eight hours pay for seven hours work or nine hours pay for eight hours work.

(Mason Tenders District Council)

PLUMBER

Plumber

Effective Period: 7/1/2012 - 12/31/2012
Wage Rate per Hour: $51.76
Supplemental Benefit Rate per Hour: $37.19
Supplemental Note: Overtime supplemental benefit rate per hour: $74.10

Effective Period: 1/1/2013 - 6/30/2013
Wage Rate per Hour: $52.36
Supplemental Benefit Rate per Hour: $37.34
Supplemental Note: Overtime supplemental benefit rate per hour: $74.40

Overtime Description
Double time the regular rate after a 7 hour day - unless for new construction site work where the plumbing contract price is $1 million or less, and for public works jobs where the plumbing contract is $1.5 million or less, the hours of labor can be 8 hours per day at the employers option. On Alteration jobs when other mechanical

trades at the site are working an eighth hour at straight time, then the plumber shall also work an eighth hour at straight time.

Overtime

Double time the regular time rate for Saturday.
Double time the regular rate for Sunday.

Overtime Holidays

Double time the regular rate for work on the following holiday(s).
New Year's Day
President's Day
Memorial Day
Independence Day
Labor Day
Columbus Day
Veteran's Day
Thanksgiving Day
Day after Thanksgiving
Christmas Day

Shift Rates

Shift work, when directly specified in public agency or authority documents where plumbing contract is $8 million or less, will be permitted. 30% shift premium shall be paid for wages and fringe benefits for 4:00 pm and midnight shifts Monday to Friday. 50% shift premium shall be paid for wages and fringe benefits for 4:00 pm and midnight shift work performed on weekends. For shift work on holidays, double time wages and fringe benefits shall be paid.

(Plumbers Local #1)

PLUMBER (MECHNICAL EQUIPMENT AND SERVICE)
(Mechanical Equipment and Service work shall include any repair and/or replacement of the present plumbing system.)

Effective Period: 7/1/2012 - 12/31/2012
Wage Rate per Hour: $32.96
Supplemental Benefit Rate per Hour: $15.93

Effective Period: 1/1/2013 - 6/30/2013
Wage Rate per Hour: $33.21
Supplemental Benefit Rate per Hour: $16.43

Overtime

Time and one half the regular rate after an 8 hour day.
Time and one half the regular rate for Saturday.
Time and one half the regular rate for Sunday.

Overtime Holidays

Time and one half the regular rate for work on the following holiday(s).
New Year's Day
President's Day
Memorial Day
Independence Day
Thanksgiving Day
Day after Thanksgiving
Christmas Day

Paid Holidays

None

(Plumbers Local # 1)

PLUMBER (RESIDENTIAL RATES FOR 1, 2 AND 3 FAMILY HOME CONSTRUCTION)

Effective Period: 7/1/2012 - 12/31/2012
Wage Rate per Hour: $36.69
Supplemental Benefit Rate per Hour: $25.46

Effective Period: 1/1/2013 - 6/30/2013
Wage Rate per Hour: $37.11
Supplemental Benefit Rate per Hour: $25.56

Overtime

Double time the regular rate after an 8 hour day.
Double time the regular time rate for Saturday.
Double time the regular rate for Sunday.

Overtime Holidays

Double time the regular rate for work on the following holiday(s).
New Year's Day
President's Day
Memorial Day
Independence Day
Labor Day
Columbus Day
Veteran's Day
Thanksgiving Day
Day after Thanksgiving
Christmas Day

Paid Holidays

None

Shift Rates

30% shift premium shall be paid for wages and fringe benefits for 4:00 pm and midnight shifts Monday to Friday. 50% shift premium shall be paid for wages and fringe benefits for 4:00 pm and midnight shift work performed on weekends. For shift work on holidays, double time wages and fringe benefits shall be paid.

(Plumbers Local #1)

PLUMBER: PUMP & TANK
(Installation and Maintenance)

Plumber - Pump & Tank

Effective Period: 7/1/2012 - 6/30/2013
Wage Rate per Hour: $52.31
Supplemental Benefit Rate per Hour: $31.56

Overtime

Time and one half the regular rate after an 8 hour day.
Time and one half the regular rate for Saturday.
Time and one half the regular rate for Sunday.

Overtime Holidays

Time and one half the regular rate for work on the following holiday(s).
New Year's Day
President's Day
Memorial Day
Independence Day
Labor Day
Columbus Day
Veteran's Day
Thanksgiving Day
Day after Thanksgiving
Christmas Day

Paid Holidays

None

Shift Rates

All work outside the regular workday (8:00 A.M. to 3:30 P.M.) is to be paid at time and one half the regular hourly rate

(Plumbers Local #1)

POINTER - WATERPROOFER, CAULKER MECHANIC (EXTERIOR BUILDING RENOVATION)

Pointer - Waterproofer, Caulker Mechanic

Effective Period: 7/1/2012 - 6/30/2013
Wage Rate per Hour: $44.63
Supplemental Benefit Rate per Hour: $23.10

Overtime
Time and one half the regular rate after an 8 hour day.
Time and one half the regular rate for Saturday.
Time and one half the regular rate for Sunday.
Saturday may be used as a make-up day at straight time when a day is lost during that week to inclement weather.

Overtime Holidays
Time and one half the regular rate for work on the following holiday(s).
New Year's Day
Martin Luther King Jr. Day
President's Day
Memorial Day
Independence Day
Labor Day
Thanksgiving Day
Christmas Day

Paid Holidays
None

Shift Rates
All work outside the regular work day (an eight hour workday between the hours of 6:00 A.M. and 4:30 P.M.) is to be paid at time and one half the regular rate.

(Bricklayer District Council)

ROOFER

Roofer

Effective Period: 7/1/2012 - 12/31/2012
Wage Rate per Hour: $38.00
Supplemental Benefit Rate per Hour: $27.07

Effective Period: 1/1/2013 - 6/30/2013

Wage Rate per Hour: $39.00
Supplemental Benefit Rate per Hour: $27.37

Overtime
Time and one half the regular rate after an 8 hour day.
Time and one half the regular rate for Saturday.
Time and one half the regular rate for Sunday.

Overtime Holidays
Time and one half the regular rate for work on the following holiday(s).
New Year's Day
President's Day
Memorial Day
Independence Day
Labor Day
Presidential Election Day
Thanksgiving Day
Christmas Day

Paid Holidays
None

Shift Rates
Second shift - Regular hourly rate plus a 10% differential. Third shift - Regular hourly rate plus a 15% differential.

(Local #8)

SANDBLASTER - STEAMBLASTER
(Exterior Building Renovation)

Sandblaster / Steamblaster

Effective Period: 7/1/2012 - 6/30/2013
Wage Rate per Hour: $44.63
Supplemental Benefit Rate per Hour: $23.10

Overtime
Time and one half the regular rate after an 8 hour day.
Time and one half the regular rate for Saturday.
Time and one half the regular rate for Sunday.
Saturday may be used as a make-up day at straight time when a day is lost during that week to inclement weather.

Overtime Holidays
Time and one half the regular rate for work on the following holiday(s).

New Year's Day
Martin Luther King Jr. Day
President's Day
Memorial Day
Independence Day
Labor Day
Thanksgiving Day
Christmas Day

Paid Holidays

None

Shift Rates

All work outside the regular work day (an eight hour workday between the hours of 6:00 A.M. and 4:30 P.M.) is to be paid at time and one half the regular rate.

(Bricklayer District Council)

SHEET METAL WORKER

Sheet Metal Worker

Effective Period: 7/1/2012 - 12/31/2012
Wage Rate per Hour: $45.65
Supplemental Benefit Rate per Hour: $40.50
Supplemental Note: Supplemental benefit contributions are to be made at the applicable overtime rates.

Effective Period: 1/1/2013 - 6/30/2013
Wage Rate per Hour: $45.65
Supplemental Benefit Rate per Hour: $42.00
Supplemental Note: Supplemental benefit contributions are to be made at the applicable overtime rates.

Sheet Metal Worker - Duct Cleaner

Effective Period: 7/1/2012 - 6/30/2013
Wage Rate per Hour: $12.90
Supplemental Benefit Rate per Hour: $8.07

Sheet Metal Worker - Fan Maintenance

(The temporary operation of fans or blowers in new or existing buildings for heating and/or ventilation, and/or air conditioning prior to the completion of the project.)

Effective Period: 7/1/2012 - 12/31/2012
Wage Rate per Hour: $36.52
Supplemental Benefit Rate per Hour: $40.50

Effective Period: 1/1/2013 - 6/30/2013
Wage Rate per Hour: $36.52
Supplemental Benefit Rate per Hour: $42.00

Overtime

Time and one half the regular rate after a 7 hour day.
Time and one half the regular rate for Saturday.
Double time the regular rate for Sunday.

Overtime Holidays

Double time the regular rate for work on the following holiday(s).
New Year's Day
Martin Luther King Jr. Day
President's Day
Memorial Day
Independence Day
Labor Day
Columbus Day
Veteran's Day
Thanksgiving Day
Day after Thanksgiving
Christmas Day

Paid Holidays

None

Shift Rates

Work that can only be performed outside regular working hours (seven hours of work between 7:30 A.M. and 3:30 P.M.) - First shift (work between 3:30 P.M. and 11:30 P.M.) - 10% differential above the established hourly rate. Second shift (work between 11:30 P.M. and 7:30 A.M.) - 15% differential above the established hourly rate.

For Fan Maintenance: On all full shifts of fan maintenance work the straight time hourly rate of pay will be paid for each shift, including nights, Saturdays, Sundays, and holidays. No journeyperson engaged in fan maintenance shall work in excess of forty (40) hours in any work week.

(Local #28)

SHEET METAL WORKER - SPECIALTY
(Decking & Siding)

Sheet Metal Specialty Worker

The first worker to perform this work must be paid at the rate of the Sheet Metal Worker. The second and third workers shall be paid the Specialty Worker Rate. The ratio of One Sheet Metal Worker, then Two Specialty Workers shall be utilized thereafter.

Effective Period: 7/1/2012 - 6/30/2013
Wage Rate per Hour: $40.09
Supplemental Benefit Rate per Hour: $22.06
Supplemental Note: Supplemental benefit contributions are to be made at the applicable overtime rates.

Overtime
Time and one half the regular rate after an 8 hour day.
Time and one half the regular rate for Saturday.
Double time the regular rate for Sunday.

Overtime Holidays
Double time the regular rate for work on the following holiday(s).
New Year's Day
Martin Luther King Jr. Day
President's Day
Memorial Day
Independence Day
Labor Day
Columbus Day
Veteran's Day
Thanksgiving Day
Christmas Day

Paid Holidays
None

(Local #28)

SIGN ERECTOR
(Sheet Metal, Plastic, Electric, and Neon)

Sign Erector

Effective Period: 7/1/2012 - 12/31/2012
Wage Rate per Hour: $41.55
Supplemental Benefit Rate per Hour: $39.32

Effective Period: 1/1/2013 - 6/30/2013
Wage Rate per Hour: $42.80
Supplemental Benefit Rate per Hour: $42.17

Overtime
Time and one half the regular rate after a 7 hour day.
Time and one half the regular rate for Saturday.

Time and one half the regular rate for Sunday.
Time and one half the regular rate for work on the following holiday(s).

Paid Holidays

New Year's Day
Washington's Birthday
Memorial Day
Independence Day
Labor Day
Columbus Day
Election Day
Thanksgiving Day
Day after Thanksgiving
Christmas Day

Shift Rates

Time and one half the regular hourly rate is to be paid for all hours worked outside the regular workday either (7:00 A.M. through 2:30 P.M.) or (8:00 A.M. through 3:30 P.M.)

(Local #137)

STEAMFITTER

Steamfitter I

Effective Period: 7/1/2012 - 12/31/2012
Wage Rate per Hour: $50.75
Supplemental Benefit Rate per Hour: $49.68
Supplemental Note: Overtime supplemental benefit rate: $98.62

Effective Period: 1/1/2013 - 6/30/2013
Wage Rate per Hour: $51.25
Supplemental Benefit Rate per Hour: $50.54
Supplemental Note: Overtime supplemental benefit rate: $100.34

Overtime

Double time the regular rate after a 7 hour day.
Double time the regular time rate for Saturday.
Double time the regular rate for Sunday.

Overtime Holidays

Double time the regular rate for work on the following holiday(s).
New Year's Day
President's Day
Memorial Day
Independence Day
Labor Day

Columbus Day
Veteran's Day
Thanksgiving Day
Day after Thanksgiving
Christmas Day

Paid Holidays

None

Shift Rates

Work performed between 3:30 P.M. and 7:00 A.M. and on Saturdays, Sundays and Holidays shall be at double time the regular hourly rate and paid at the overtime supplemental benefit rate above.

Steamfitter II

For heating, ventilation, air conditioning and mechanical public works contracts with a dollar value not to exceed $15,000,000 and for fire protection/sprinkler public works contracts not to exceed $1,500,000.

Effective Period: 7/1/2012 - 12/31/2012
Wage Rate per Hour: $50.75
Supplemental Benefit Rate per Hour: $49.68
Supplemental Note: Overtime supplemental benefit rate: $98.62

Effective Period: 1/1/2013 - 6/30/2013
Wage Rate per Hour: $51.25
Supplemental Benefit Rate per Hour: $50.54
Supplemental Note: Overtime supplemental benefit rate: $100.34

Overtime

Double time the regular rate after an 8 hour day.
Double time the regular time rate for Saturday.
Double time the regular rate for Sunday.

Overtime Holidays

Double time the regular rate for work on the following holiday(s).
New Year's Day
President's Day
Memorial Day
Independence Day
Labor Day
Columbus Day
Veteran's Day
Thanksgiving Day
Day after Thanksgiving
Christmas Day

Paid Holidays

None

Shift Rates

May be performed outside of the regular workday except Saturday, Sunday and Holidays. A shift shall consist of eight working hours. All work performed in excess of eight hours shall be paid at double time. No shift shall commence after 7:00 P.M. on Friday or 7:00 P.M. the day before holidays. All work performed after 12:01 A.M. Saturday or 12:01 A.M. the day before a Holiday will be paid at double time. When shift work is performed the wage rate for regular time worked is a thirty percent premium together with fringe benefits.

On Transit Authority projects, where work is performed in the vicinity of tracks all shift work on weekends and holidays may be performed at the regular shift rates.

Local #638

STEAMFITTER - REFRIGERATION AND AIR CONDITIONER (Maintenance and Installation Service Person)

Refrigeration and Air Conditioner Mechanic

Effective Period: 7/1/2012 - 12/31/2012
Wage Rate per Hour: $36.30
Supplemental Benefit Rate per Hour: $11.76

Effective Period: 1/1/2013 - 6/30/2013
Wage Rate per Hour: $37.05
Supplemental Benefit Rate per Hour: $12.26

Refrigeration and Air Conditioner Service Person V (4th year)

Effective Period: 7/1/2012 - 12/31/2012
Wage Rate per Hour: $29.82
Supplemental Benefit Rate per Hour: $10.71

Effective Period: 1/1/2013 - 6/30/2013
Wage Rate per Hour: $30.44
Supplemental Benefit Rate per Hour: $11.13

Refrigeration and Air Conditioner Service Person IV (3rd year)

Effective Period: 7/1/2012 - 12/31/2012
Wage Rate per Hour: $24.71
Supplemental Benefit Rate per Hour: $9.80

Effective Period: 1/1/2013 - 6/30/2013

Wage Rate per Hour: $25.22
Supplemental Benefit Rate per Hour: $10.16

Refrigeration and Air Conditioner Service Person III (2nd year)

Filter changing and maintenance thereof, oil and greasing, tower and coil cleaning, scraping and painting, general housekeeping, taking of water samples.

Effective Period: 7/1/2012 - 12/31/2012
Wage Rate per Hour: $21.21
Supplemental Benefit Rate per Hour: $9.12

Effective Period: 1/1/2013 - 6/30/2013
Wage Rate per Hour: $21.65
Supplemental Benefit Rate per Hour: $9.44

Refrigeration and Air Conditioner Service Person II (2nd six months)

Filter changing and maintenance thereof, oil and greasing, tower and coil cleaning, scraping and painting, general housekeeping, taking of water samples.

Effective Period: 7/1/2012 - 12/31/2012
Wage Rate per Hour: $17.60
Supplemental Benefit Rate per Hour: $8.50

Effective Period: 1/1/2013 - 6/30/2013
Wage Rate per Hour: $17.96
Supplemental Benefit Rate per Hour: $8.78

Refrigeration and Air Conditioner Service Person I (1st six months)

Filter changing and maintenance thereof, oil and greasing, tower and coil cleaning, scraping and painting, general housekeeping, taking of water samples.

Effective Period: 7/1/2012 - 12/31/2012
Wage Rate per Hour: $10.95
Supplemental Benefit Rate per Hour: $7.90

Effective Period: 1/1/2013 - 6/30/2013
Wage Rate per Hour: $11.18
Supplemental Benefit Rate per Hour: $8.10

Overtime

Time and one half the regular rate after an 8 hour day.
Time and one half the regular rate for Saturday.
Double time the regular rate for Sunday.

Overtime Holidays

Double time the regular rate for work on the following holiday(s).
New Year's Day
Independence Day
Labor Day
Veteran's Day
Thanksgiving Day
Christmas Day

Double time and one half the regular rate for work on the following holiday(s).
Martin Luther King Jr. Day
President's Day
Memorial Day
Columbus Day

Paid Holidays

New Year's Day
Martin Luther King Jr. Day
President's Day
Memorial Day
Independence Day
Labor Day
Columbus Day
Veteran's Day
Thanksgiving Day
Christmas Day

(Local #638B)

STONE MASON - SETTER

Stone Mason - Setters

Effective Period: 7/1/2012 - 6/30/2013
Wage Rate per Hour: $47.72
Supplemental Benefit Rate per Hour: $35.28

Overtime

Time and one half the regular rate after a 7 hour day.
Time and one half the regular rate for Saturday.
Double time the regular rate for Sunday.

Overtime Holidays

Double time the regular rate for work on the following holiday(s).
New Year's Day
Washington's Birthday
Good Friday
Memorial Day
Independence Day
Labor Day

Thanksgiving Day
Christmas Day

Paid Holidays
1/2 day on Christmas Eve if work is performed in the A.M.

Shift Rates
For all work outside the regular workday (8:00 A.M. to 3:30 P.M. Monday through Friday), the pay shall be straight time plus a ten percent (10%) differential.

(Bricklayers District Council)

TAPER

Drywall Taper

Effective Period: 7/1/2012 - 12/25/2012
Wage Rate per Hour: $43.32
Supplemental Benefit Rate per Hour: $21.66

Effective Period: 12/26/2012 - 6/30/2013
Wage Rate per Hour: $43.82
Supplemental Benefit Rate per Hour: $21.66

Overtime
Time and one half the regular rate after a 7 hour day.
Time and one half the regular rate for Saturday.
Time and one half the regular rate for Sunday.

Overtime Holidays
Time and one half the regular rate for work on the following holiday(s).
New Year's Day
Martin Luther King Jr. Day
President's Day
Good Friday
Memorial Day
Independence Day
Labor Day
Columbus Day
Thanksgiving Day
Christmas Day

Paid Holidays
Any worker who reports to work on Christmas Eve or New Year's Eve pursuant to his employer's instruction shall be entitled to three (3) hours afternoon pay without working.

Shift Rates

Time and one half the regular rate outside the regular work hours (8:00 A.M. through 3:30 P.M.)

(Local #1974)

TELECOMMUNICATION WORKER
(Voice Installation Only)

Telecommunication Worker

Effective Period: 7/1/2012 - 6/30/2013
Wage Rate per Hour: $35.94
Supplemental Benefit Rate per Hour: $13.19
Supplemental Note: The above rate applies for Manhattan, Bronx, Brooklyn, Queens. $12.64 for Staten Island only.

Overtime

Time and one half the regular rate after a 7 hour day.
Time and one half the regular rate for Saturday.
Time and one half the regular rate for Sunday.

Overtime Holidays

Time and one half the regular rate for work on the following holiday(s).
New Year's Day
Lincoln's Birthday
Washington's Birthday
Memorial Day
Independence Day
Labor Day
Columbus Day
Election Day
Veteran's Day
Thanksgiving Day
Christmas Day

Paid Holidays

New Year's Day
Lincoln's Birthday
Washington's Birthday
Memorial Day
Independence Day
Labor Day
Columbus Day
Election Day
Veteran's Day
Thanksgiving Day
Christmas Day

Employees have the option of observing either Martin Luther King's Birthday or the day after Thanksgiving instead of Lincoln's Birthday

Shift Rates

For any workday that starts before 8A.M. or ends after 6P.M. there is a 10% differential for the applicable worker's hourly rate.

Vacation

After 6 months.....one week.
After 12 months but less than 7 years.....two weeks.
After 7 or more but less than 15 years.....three weeks.
After 15 years or more but less than 25 years.....four weeks.

(C.W.A.)

TILE FINISHER

Tile Finisher

Effective Period: 7/1/2012 - 12/31/2012
Wage Rate per Hour: $38.17
Supplemental Benefit Rate per Hour: $26.76

Effective Period: 1/1/2013 - 6/30/2013
Wage Rate per Hour: $38.49
Supplemental Benefit Rate per Hour: $27.42

Overtime

Time and one half the regular rate after a 7 hour day.
Time and one half the regular rate for Saturday.
Double time the regular rate for Sunday.

Overtime Holidays

Double time the regular rate for work on the following holiday(s).
New Year's Day
President's Day
Good Friday
Memorial Day
Independence Day
Labor Day
Columbus Day
Veteran's Day
Thanksgiving Day
Day after Thanksgiving
Christmas Day

Paid Holidays

None

Shift Rates

Off shift work day (work performed outside the regular 8:00 A.M. to 3:30 P.M. workday): shift differential of one and one quarter (1¼) times the regular straight time rate of pay for the seven hours of actual off-shift work.

(Local #7)

TILE LAYER - SETTER

Tile Layer - Setter

Effective Period: 7/1/2012 - 12/31/2012
Wage Rate per Hour: $47.75
Supplemental Benefit Rate per Hour: $30.83

Effective Period: 1/1/2013 - 6/30/2013
Wage Rate per Hour: $48.55
Supplemental Benefit Rate per Hour: $31.46

Overtime

Time and one half the regular rate after a 7 hour day.
Time and one half the regular rate for Saturday.
Double time the regular rate for Sunday.

Overtime Holidays

Double time the regular rate for work on the following holiday(s).
New Year's Day
President's Day
Good Friday
Memorial Day
Independence Day
Labor Day
Columbus Day
Veteran's Day
Thanksgiving Day
Day after Thanksgiving
Christmas Day

Shift Rates

Off shift work day (work performed outside the regular 8:00 A.M. to 3:30 P.M. workday): shift differential of one and one quarter (1¼) times the regular straight time rate of pay for the seven hours of actual off-shift work.

(Local #7)

TIMBERPERSON

Timberperson

Effective Period: 7/1/2012 - 6/30/2013
Wage Rate per Hour: $42.63
Supplemental Benefit Rate per Hour: $41.99

Overtime
Time and one half the regular rate after an 8 hour day.
Time and one half the regular rate for Saturday.
Double time the regular rate for Sunday.
Saturday may be used as a make-up day at straight time when a day is lost during that week to inclement weather.

Overtime Holidays
Double time the regular rate for work on the following holiday(s).
New Year's Day
President's Day
Memorial Day
Independence Day
Labor Day
Columbus Day
Presidential Election Day
Thanksgiving Day
Christmas Day

Paid Holidays
None

Shift Rates
Off shift work, commencing between 5:00 P.M. and 10:00 P.M., shall work eight and one half hours but will be paid for 9 hours, including benefits at the straight time rate for 8 hours.

(Local #1536)

TUNNEL WORKER

Blasters, Mucking Machine Operators (Compressed Air Rates)

Effective Period: 7/1/2012 - 6/30/2013
Wage Rate per Hour: $52.00
Supplemental Benefit Rate per Hour: $46.85

Tunnel Workers (Compressed Air Rates)

Effective Period: 7/1/2012 - 6/30/2013
Wage Rate per Hour: $50.19
Supplemental Benefit Rate per Hour: $45.29

Top Nipper (Compressed Air Rates)

Effective Period: 7/1/2012 - 6/30/2013
Wage Rate per Hour: $49.27
Supplemental Benefit Rate per Hour: $44.51

Outside Lock Tender, Outside Gauge Tender,Muck Lock Tender (Compressed Air Rates)

Effective Period: 7/1/2012 - 6/30/2013
Wage Rate per Hour: $48.37
Supplemental Benefit Rate per Hour: $43.67

Bottom Bell & Top Bell Signal Person: Shaft Person (Compressed Air Rates)

Effective Period: 7/1/2012 - 6/30/2013
Wage Rate per Hour: $48.37
Supplemental Benefit Rate per Hour: $43.67

Changehouse Attendant: Powder Watchperson (Compressed Air Rates)

Effective Period: 7/1/2012 - 6/30/2013
Wage Rate per Hour: $42.09
Supplemental Benefit Rate per Hour: $41.41

Blasters (Free Air Rates)

Effective Period: 7/1/2012 - 6/30/2013
Wage Rate per Hour: $49.62
Supplemental Benefit Rate per Hour: $44.75

Tunnel Workers (Free Air Rates)

Effective Period: 7/1/2012 - 6/30/2013
Wage Rate per Hour: $47.48
Supplemental Benefit Rate per Hour: $42.84

All Others (Free Air Rates)

Effective Period: 7/1/2012 - 6/30/2013
Wage Rate per Hour: $43.87
Supplemental Benefit Rate per Hour: $39.62

Microtunneling (Free Air Rates)

Effective Period: 7/1/2012 - 6/30/2013
Wage Rate per Hour: $37.98
Supplemental Benefit Rate per Hour: $34.27

Overtime Description

For Repair-Maintenance Work on Existing Equipment and Facilities - Time and one half the regular rate after a 7 hour day, or for Saturday, or for Sunday. Double time the regular rate for work on a holiday.

Overtime

Double time the regular rate after an 8 hour day.
Double time the regular time rate for Saturday.
Double time the regular rate for Sunday.
Double time the regular rate for work on the following holiday(s).

Paid Holidays

New Year's Day
Lincoln's Birthday
President's Day
Memorial Day
Independence Day
Labor Day
Columbus Day
Election Day
Veteran's Day
Thanksgiving Day
Christmas Day

(Local #147)

WELDER
TO BE PAID AT THE RATE OF THE JOURNEYPERSON IN THE TRADE PERFORMING THE WORK.

(NO TEXT ON THIS PAGE)

OFFICE OF THE COMPTROLLER

CITY OF NEW YORK

220 APPRENTICESHIP PREVAILING WAGE SCHEDULE

APPENDIX

Pursuant to Labor Law §220 (3-e), only apprentices who are individually registered in a bona fide program to which the employer contractor is a participant and registered with the New York State Department of Labor, may be employed on a public work project.
Any employee listed on a payroll at an apprentice wage rate, who is not registered as above, shall be paid the journey person wage rate for the classification of work he actually performed.

Apprentice ratios are established to ensure the proper safety, training and supervision of apprentices. A ratio establishes the number of journey workers required for each apprentice in a program and on a job site. Ratios are interpreted as follows: in the case of a 1:1, 1:4 ratio, there must be one journey worker for the first apprentice, and four additional journey workers for each subsequent apprentice.

APPRENTICESHIP SCHEDULE OF PREVAILING WAGES AND SUPPLEMENTAL BENEFITS ADDENDUM
EFFECTIVE PERIOD JANUARY 1, 2013 THROUGH JUNE 30, 2013

List of Amended Classifications

1. Boilermaker
2. House Wrecker
3. Iron Worker - Ornamental
4. Iron Worker - Structural
5. Mason Tender
6. Plasterer
7. Plumber

TABLE OF CONTENTS

ASBESTOS HANDLER
(Ratio of Apprentice Journeyperson: 1 to 1, 1 to 3)

Asbestos Handler (First 1000 Hours)

Effective Period: 7/1/2012 - 6/30/2013
Wage Rate Per Hour: 78% of Journeyperson's rate
Supplemental Benefit Rate Per Hour: $14.85

Asbestos Handler (Second 1000 Hours)

Effective Period: 7/1/2012 - 6/30/2013
Wage Rate Per Hour: 80% of Journeyperson's rate
Supplemental Benefit Rate Per Hour: $14.85

Asbestos Handler (Third 1000 Hours)

Effective Period: 7/1/2012 - 6/30/2013
Wage Rate Per Hour: 83% of Journeyperson's rate
Supplemental Benefit Rate Per Hour: $14.85

Asbestos Handler (Fourth 1000 Hours)

Effective Period: 7/1/2012 - 6/30/2013
Wage Rate Per Hour: 89% of Journeyperson's rate
Supplemental Benefit Rate Per Hour: $14.85

(Local #78)

BOILERMAKER
(Ratio of Apprentice to Journeyperson: 1 to 1, 1 to 3)

Boilermaker (First Year)

Effective Period: 7/1/2012 - 12/31/2012
Wage Rate Per Hour: 65% of Journeyperson's rate
Supplemental Benefit Rate Per Hour: $27.41

Effective Period: 1/1/2013 - 3/31/2013
Wage Rate Per Hour: 65% of Journeyperson's rate
Supplemental Benefit Rate Per Hour: $28.45

Effective Period: 4/1/2013 - 6/30/2013
Wage Rate Per Hour: 65% of Journeyperson's rate

Supplemental Benefit Rate Per Hour: $28.75

Boilermaker (Second Year: 1st Six Months)

Effective Period: 7/1/2012 - 12/31/2012
Wage Rate Per Hour: 70% of Journeyperson's rate
Supplemental Benefit Rate Per Hour: $28.91

Effective Period: 1/1/2013 - 3/31/2013
Wage Rate Per Hour: 70% of Journeyperson's rate
Supplemental Benefit Rate Per Hour: $30.03

Effective Period: 4/1/2013 - 6/30/2013
Wage Rate Per Hour: 70% of Journeyperson's rate
Supplemental Benefit Rate Per Hour: $30.33

Boilermaker (Second Year: 2nd Six Months)

Effective Period: 7/1/2012 - 12/31/2012
Wage Rate Per Hour: 75% of Journeyperson's rate
Supplemental Benefit Rate Per Hour: $30.40

Effective Period: 1/1/2013 - 3/31/2013
Wage Rate Per Hour: 75% of Journeyperson's rate
Supplemental Benefit Rate Per Hour: $31.61

Effective Period: 4/1/2013 - 6/30/2013
Wage Rate Per Hour: 75% of Journeyperson's rate
Supplemental Benefit Rate Per Hour: $31.91

Boilermaker (Third Year: 1st Six Months)

Effective Period: 7/1/2012 - 12/31/2012
Wage Rate Per Hour: 80% of Journeyperson's rate
Supplemental Benefit Rate Per Hour: $31.89

Effective Period: 1/1/2013 - 3/31/2013
Wage Rate Per Hour: 80% of Journeyperson's rate
Supplemental Benefit Rate Per Hour: $33.19

Effective Period: 4/1/2013 - 6/30/2013
Wage Rate Per Hour: 80% of Journeyperson's rate
Supplemental Benefit Rate Per Hour: $33.49

Boilermaker (Third Year: 2nd Six Months)

Effective Period: 7/1/2012 - 12/31/2012
Wage Rate Per Hour: 85% of Journeyperson's rate
Supplemental Benefit Rate Per Hour: $33.38

Effective Period: 1/1/2013 - 3/31/2013
Wage Rate Per Hour: 85% of Journeyperson's rate
Supplemental Benefit Rate Per Hour: $34.76

Effective Period: 4/1/2013 - 6/30/2013
Wage Rate Per Hour: 85% of Journeyperson's rate
Supplemental Benefit Rate Per Hour: $35.06

Boilermaker (Fourth Year: 1st Six Months)

Effective Period: 7/1/2012 - 12/31/2012
Wage Rate Per Hour: 90% of Journeyperson's rate
Supplemental Benefit Rate Per Hour: $34.88

Effective Period: 1/1/2013 - 3/31/2013
Wage Rate Per Hour: 90% of Journeyperson's rate
Supplemental Benefit Rate Per Hour: $36.34

Effective Period: 4/1/2013 - 6/30/2013
Wage Rate Per Hour: 90% of Journeyperson's rate
Supplemental Benefit Rate Per Hour: $36.64

Boilermaker (Fourth Year: 2nd Six Months)

Effective Period: 7/1/2012 - 12/31/2012
Wage Rate Per Hour: 95% of Journeyperson's rate
Supplemental Benefit Rate Per Hour: $36.38

Effective Period: 1/1/2013 - 3/31/2013
Wage Rate Per Hour: 95% of Journeyperson's rate
Supplemental Benefit Rate Per Hour: $37.90

Effective Period: 4/1/2013 - 6/30/2013
Wage Rate Per Hour: 95% of Journeyperson's rate
Supplemental Benefit Rate Per Hour: $38.20

(Local #5)

BRICKLAYER
(Ratio of Apprentice to Journeyperson: 1 to 1, 1 to 4)

Bricklayer (First 750 Hours)

Effective Period: 7/1/2012 - 6/30/2013
Wage Rate Per Hour: 50% of Journeyperson's rate
Supplemental Benefit Rate Per Hour: $16.60

Bricklayer (Second 750 Hours)

Effective Period: 7/1/2012 - 6/30/2013

Wage Rate Per Hour: 60% of Journeyperson's rate
Supplemental Benefit Rate Per Hour: $16.60

Bricklayer (Third 750 Hours)

Effective Period: 7/1/2012 - 6/30/2013
Wage Rate Per Hour: 70% of Journeyperson's rate
Supplemental Benefit Rate Per Hour: $16.60

Bricklayer (Fourth 750 Hours)

Effective Period: 7/1/2012 - 6/30/2013
Wage Rate Per Hour: 80% of Journeyperson's rate
Supplemental Benefit Rate Per Hour: $16.60

Bricklayer (Fifth 750 Hours)

Effective Period: 7/1/2012 - 6/30/2013
Wage Rate Per Hour: 90% of Journeyperson's rate
Supplemental Benefit Rate Per Hour: $16.60

Bricklayer (Sixth 750 Hours)

Effective Period: 7/1/2012 - 6/30/2013
Wage Rate Per Hour: 95% of Journeyperson's rate
Supplemental Benefit Rate Per Hour: $16.60

(Bricklayer District Council)

CARPENTER
(Ratio of Apprentice to Journeyperson: 1 to 1, 1 to 4)

Carpenter (First Year)

Effective Period: 7/1/2012 - 6/30/2013
Wage Rate Per Hour: 40% of Journeyperson's rate
Supplemental Benefit Rate Per Hour: $27.69

Carpenter (Second Year)

Effective Period: 7/1/2012 - 6/30/2013
Wage Rate Per Hour: 50% of Journeyperson's rate
Supplemental Benefit Rate Per Hour: $27.69

Carpenter (Third Year)

Effective Period: 7/1/2012 - 6/30/2013
Wage Rate Per Hour: 65% of Journeyperson's rate
Supplemental Benefit Rate Per Hour: $27.69

Carpenter (Fourth Year)

Effective Period: 7/1/2012 - 6/30/2013
Wage Rate Per Hour: 80% of Journeyperson's rate
Supplemental Benefit Rate Per Hour: $27.69

(Carpenters District Council)

CEMENT MASON
(Ratio of Apprentice to Journeyperson: 1 to 1, 1 to 4)

Cement Mason (First Year)

Effective Period: 7/1/2012 - 6/30/2013
Wage and Supplemental Rate Per Hour: 50% of Journeyperson's Rate

Cement Mason (Second Year)

Effective Period: 7/1/2012 - 6/30/2013
Wage and Supplemental Rate Per Hour: 60% of Journeyperson's Rate

Cement Mason (Third Year)

Effective Period: 7/1/2012 - 6/30/2013
Wage and Supplemental Rate Per Hour: 70% of Journeyperson's Rate

(Local #780)

CEMENT AND CONCRETE WORKER
(Ratio of Apprentice to Journeyperson: 1 to 1, 1 to 3)

Cement & Concrete Worker (0 - 500 hours)

Effective Period: 7/1/2012 - 6/30/2013
Wage Rate Per Hour: 50% of Journeyperson's rate
Supplemental Benefit Rate Per Hour: $17.54

Cement & Concrete Worker (501 - 1000 hours)

Effective Period: 7/1/2012 - 6/30/2013
Wage Rate Per Hour: 65% of Journeyperson's rate
Supplemental Benefit Rate Per Hour: $18.37

Cement & Concrete Worker (1001 - 2000 hours)

Effective Period: 7/1/2012 - 6/30/2013
Wage Rate Per Hour: 65% of Journeyperson's rate
Supplemental Benefit Rate Per Hour: $23.75

Cement & Concrete Worker (2001 - 4000 hours)

Effective Period: 7/1/2012 - 6/30/2013
Wage Rate Per Hour: 80% of Journeyperson's rate
Supplemental Benefit Rate Per Hour: $24.57

(Cement Concrete Workers District Council)

DERRICKPERSON & RIGGER (STONE)
(Ratio of Apprentice to Journeyperson: 1 to 1, 1 to 6)

Derrickperson & Rigger (stone) - First Year

Effective Period: 7/1/2012 - 6/30/2013
Wage Rate Per Hour: 50% of Journeyperson's rate
Supplemental Benefit Rate Per Hour: 50% of Journeyperson's rate

Derrickperson & Rigger (stone) - Second Year: 1st Six Months

Effective Period: 7/1/2012 - 6/30/2013
Wage Rate Per Hour: 70% of Journeyperson's rate
Supplemental Benefit Rate Per Hour: 75% of Journeyperson's rate

Derrickperson & Rigger (stone) - Second Year: 2nd Six Months

Effective Period: 7/1/2012 - 6/30/2013
Wage Rate Per Hour: 80% of Journeyperson's rate
Supplemental Benefit Rate Per Hour: 75% of Journeyperson's rate

Derrickperson & Rigger (stone) - Third Year

Effective Period: 7/1/2012 - 6/30/2013
Wage Rate Per Hour: 90% of Journeyperson's rate
Supplemental Benefit Rate Per Hour: 75% of Journeyperson's rate

(Local #197)

DOCKBUILDER/PILE DRIVER
(Ratio of Apprentice to Journeyperson: 1 to 1, 1 to 6)

Dockbuilder/Pile Driver (First Year)

Effective Period: 7/1/2012 - 6/30/2013
Wage Rate Per Hour: 40% of Journeyperson's rate
Supplemental Benefit Rate Per Hour: $27.69

Dockbuilder/Pile Driver (Second Year)

Effective Period: 7/1/2012 - 6/30/2013
Wage Rate Per Hour: 50% of Journeyperson's rate
Supplemental Benefit Rate Per Hour: $27.69

Dockbuilder/Pile Driver (Third Year)

Effective Period: 7/1/2012 - 6/30/2013
Wage Rate Per Hour: 65% of Journeyperson's rate
Supplemental Benefit Rate Per Hour: $27.69

Dockbuilder/Pile Driver (Fourth Year)

Effective Period: 7/1/2012 - 6/30/2013
Wage Rate Per Hour: 80% of Journeyperson's rate
Supplemental Benefit Rate Per Hour: $27.69

(Carpenters District Council)

ELECTRICIAN
(Ratio of Apprentice to Journeyperson: 1 to 1, 1 to 3)

Electrician (First Year - Hired before 5/10/07)

Effective Period: 7/1/2012 - 6/30/2013
Wage Rate per Hour: $14.25
Supplemental Benefit Rate per Hour: $11.19
Overtime Wage Rate Per Hour: $21.38

Overtime Supplemental Rate Per Hour: $11.96

Electrician (First Year - Hired on or After 5/10/07)

Effective Period: 7/1/2012 - 6/30/2013
Wage Rate per Hour: $11.50
Supplemental Benefit Rate per Hour: $9.86
Overtime Wage Rate Per Hour: $17.25
Overtime Supplemental Rate Per Hour: $10.48

Electrician (Second Year - Hired before 5/10/07)

Effective Period: 7/1/2012 - 6/30/2013
Wage Rate per Hour: $17.05
Supplemental Benefit Rate per Hour: $12.54
Overtime Wage Rate Per Hour: $25.58
Overtime Supplemental Rate Per Hour: $13.47

Electrician (Second Year - Hired on or After 5/10/07)

Effective Period: 7/1/2012 - 6/30/2013
Wage Rate per Hour: $13.50
Supplemental Benefit Rate per Hour: $10.83
Overtime Wage Rate Per Hour: $20.25
Overtime Supplemental Rate Per Hour: $11.56

Electrician (Third Year - Hired before 5/10/07)

Effective Period: 7/1/2012 - 6/30/2013
Wage Rate per Hour: $19.15
Supplemental Benefit Rate per Hour: $13.56
Overtime Wage Rate Per Hour: $28.73
Overtime Supplemental Rate Per Hour: $14.60

Electrician (Third Year - Hired on or After 5/10/07)

Effective Period: 7/1/2012 - 6/30/2013
Wage Rate per Hour: $15.50
Supplemental Benefit Rate per Hour: $11.79
Overtime Wage Rate Per Hour: $23.25
Overtime Supplemental Rate Per Hour: $12.63

Electrician (Fourth Year - Hired before 5/10/07)

Effective Period: 7/1/2012 - 6/30/2013
Wage Rate per Hour: $21.10
Supplemental Benefit Rate per Hour: $14.50
Overtime Wage Rate Per Hour: $31.65
Overtime Supplemental Rate Per Hour: $15.65

Electrician (Fourth Year - Hired on or After 5/10/07)

Effective Period: 7/1/2012 - 6/30/2013
Wage Rate per Hour: $17.50
Supplemental Benefit Rate per Hour: $12.76
Overtime Wage Rate Per Hour: $26.25
Overtime Supplemental Rate Per Hour: $13.71

Electrician (Fifth Year - Hired before 5/10/07)

Effective Period: 7/1/2012 - 6/30/2013
Wage Rate per Hour: $25.30
Supplemental Benefit Rate per Hour: $17.52
Overtime Wage Rate Per Hour: $37.95
Overtime Supplemental Rate Per Hour: $18.85

Electrician (Fifth Year - Hired on or After 5/10/07)

Effective Period: 7/1/2012 - 6/30/2013
Wage Rate per Hour: $21.50
Supplemental Benefit Rate per Hour: $15.71
Overtime Wage Rate Per Hour: $32.25
Overtime Supplemental Rate Per Hour: $16.84

Overtime Description

For "A" rated Apprentices (work in excess of 7 hours per day)
For "M" rated Apprentices (work in excess of 8 hours per day)

(Local #3)

ELEVATOR CONSTRUCTOR
(Ratio of Apprentice to Journeyperson: 1 to 1, 1 to 2)

Elevator (Constructor) - First Year

Effective Period: 7/1/2012 - 6/30/2013
Wage Rate Per Hour: 50% of Journeyperson's rate
Supplemental Rate Per Hour: $25.40
Effective 3/17/2013 - Supplemental Rate Per Hour: $26.87

Elevator (Constructor) - Second Year

Effective Period: 7/1/2012 - 6/30/2013
Wage Rate Per Hour: 55% of Journeyperson's rate
Supplemental Rate Per Hour: $26.43
Effective 3/17/2013 - Supplemental Rate Per Hour: $27.92

Elevator (Constructor) - Third Year

Effective Period: 7/1/2012 - 6/30/2013
Wage Rate Per Hour: 65% of Journeyperson's rate
Supplemental Rate Per Hour: $27.84
Effective 3/17/2013 - Supplemental Rate Per Hour: $29.38

Elevator (Constructor) - Fourth Year

Effective Period: 7/1/2012 - 6/30/2013
Wage Rate Per Hour: 75% of Journeyperson's rate
Supplemental Rate Per Hour: $29.25
Effective 3/17/2013 - Supplemental Benefit Per Hour: $30.84

(Local #1)

ELEVATOR REPAIR & MAINTENANCE
(Ratio of Apprentice to Journeyperson: 1 to 1, 1 to 2)

Elevator Service/Modernization Mechanic (First Year)

Effective Period: 7/1/2012 - 6/30/2013
Wage Rate Per Hour: 50% of Journeyperson's rate
Supplemental Benefit Per Hour: $25.33
Effective 3/17/2013 - Supplemental Benefit Per Hour: $26.79

Elevator Service/Modernization Mechanic (Second Year)

Effective Period: 7/1/2012 - 6/30/2013
Wage Rate Per Hour: 55% of Journeyperson's rate
Supplemental Benefit Per Hour: $25.65
Effective 3/17/2013 - Supplemental Benefit Per Hour: $27.12

Elevator Service/Modernization Mechanic (Third Year)

Effective Period: 7/1/2012 - 6/30/2013
Wage Rate Per Hour: 65% of Journeyperson's rate
Supplemental Benefit Per Hour: $26.92
Effective 3/17/2013 - Supplemental Benefit Per Hour: $28.43

Elevator Service/Modernization Mechanic (Fourth Year)

Effective Period: 7/1/2012 - 6/30/2013
Wage Rate Per Hour: 75% of Journeyperson's rate
Supplemental Benefit Per Hour: $28.19

Effective 3/17/2013 - Supplemental Benefit Per Hour: $29.74

(Local #1)

ENGINEER
(Ratio of Apprentice to Journeyperson: 1 to 1, 1 to 5)

Engineer - First Year

Effective Period: 7/1/2012 - 6/30/2013
Wage Rate per Hour: $21.64
Supplemental Benefit Rate per Hour: $20.07

Engineer - Second Year

Effective Period: 7/1/2012 - 6/30/2013
Wage Rate per Hour: $27.05
Supplemental Benefit Rate per Hour: $20.07

Engineer - Third Year

Effective Period: 7/1/2012 - 6/30/2013
Wage Rate per Hour: $29.75
Supplemental Benefit Rate per Hour: $20.07

Engineer - Fourth Year

Effective Period: 7/1/2012 - 6/30/2013
Wage Rate per Hour: $32.45
Supplemental Benefit Rate per Hour: $20.07

(Local #15)

ENGINEER - OPERATING
(Ratio of Apprentice to Journeyperson: 1 to 1, 1 to 5)

Operating Engineer - First Year

Effective Period: 7/1/2012 - 6/30/2013
Wage Rate Per Hour 40% of Journeyperson's Rate

Supplemental Benefit Per Hour: $18.65

Operating Engineer - Second Year

Effective Period: 7/1/2012 - 6/30/2013
Wage Rate Per Hour: 50% of Journeyperson's Rate
Supplemental Benefit Per Hour: $18.65

Operating Engineer - Third Year

Effective Period: 7/1/2012 - 6/30/2013
Wage Rate Per Hour: 60% of Journeyperson's Rate
Supplemental Benefit Per Hour: $18.65

(Local #14)

FLOOR COVERER
(Ratio of Apprentice to Journeyperson: 1 to 1, 1 to 4)

Floor Coverer (First Year)

Effective Period: 7/1/2012 - 6/30/2013
Wage Rate Per Hour: 40% of Journeyperson's rate
Supplemental Rate Per Hour: $25.75

Floor Coverer (Second Year)

Effective Period: 7/1/2012 - 6/30/2013
Wage Rate Per Hour: 50% of Journeyperson's rate
Supplemental Rate Per Hour: $25.75

Floor Coverer (Third Year)

Effective Period: 7/1/2012 - 6/30/2013
Wage Rate Per Hour: 65% of Journeyperson's rate
Supplemental Rate Per Hour: $25.75

Floor Coverer (Fourth Year)

Effective Period: 7/1/2012 - 6/30/2013
Wage Rate Per Hour: 80% of Journeyperson's rate
Supplemental Rate Per Hour: $25.75

(Carpenters District Council)

GLAZIER
(Ratio of Apprentice to Journeyperson: 1 to 1, 1 to 3)

Glazier (First Year)

Effective Period: 7/1/2012 - 6/30/2013
Wage Rate Per Hour: 40% of Journeyperson's rate
Supplemental Rate Per Hour: $11.97

Glazier (Second Year)

Effective Period: 7/1/2012 - 10/31/2012
Wage Rate Per Hour: 50% of Journeyperson's rate
Supplemental Rate Per Hour: $21.01

Effective Period: 11/1/2012 - 6/30/2013
Wage Rate Per Hour: 50% of Journeyperson's rate
Supplemental Rate Per Hour: $21.13

Glazier (Third Year)

Effective Period: 7/1/2012 - 10/31/2012
Wage Rate Per Hour: 60% of Journeyperson's rate
Supplemental Rate Per Hour: $23.38

Effective Period: 11/1/2012 - 6/30/2013
Wage Rate Per Hour: 50% of Journeyperson's rate
Supplemental Rate Per Hour: $23.54

Glazier (Fourth Year)

Effective Period: 7/1/2012 - 10/31/2012
Wage Rate Per Hour: 80% of Journeyperson's rate
Supplemental Rate Per Hour: $28.14

Effective Period: 11/1/2012 - 6/30/2013
Wage Rate Per Hour: 50% of Journeyperson's rate
Supplemental Rate Per Hour: $28.34

(Local #1281)

HEAT & FROST INSULATOR
(Ratio of Apprentice to Journeyperson: 1 to 1, 1 to 4)

Heat & Frost Insulator (First Year)

Effective Period: 7/1/2012 - 6/30/2013
Wage and Supplemental Rate Per Hour: 40% of Journeyperson's rate

Heat & Frost Insulator (Second Year)

Effective Period: 7/1/2012 - 6/30/2013
Wage and Supplemental Rate Per Hour: 60% of Journeyperson's rate

Heat & Frost Insulator (Third Year)

Effective Period: 7/1/2012 - 6/30/2013
Wage and Supplemental Rate Per Hour: 70% of Journeyperson's rate

Heat & Frost Insulator (Fourth Year)

Effective Period: 7/1/2012 - 6/30/2013
Wage and Supplemental Rate Per Hour: 80% of Journeyperson's rate

(Local #12)

HOUSE WRECKER
(TOTAL DEMOLITION)
(Ratio of Apprentice to Journeyperson: 1 to 1, 1 to 3)

House Wrecker - First Year

Effective Period: 7/1/2012 - 12/31/2012
Wage Rate per Hour: $20.06
Supplemental Benefit Rate per Hour: $15.45

Effective Period: 1/1/2013 - 6/30/2013
Wage Rate per Hour: $20.21
Supplemental Benefit Rate per Hour: $15.80

House Wrecker - Second Year

Effective Period: 7/1/2012 - 12/31/2012
Wage Rate per Hour: $21.06
Supplemental Benefit Rate per Hour: $15.45

Effective Period: 1/1/2013 - 6/30/2013

Wage Rate per Hour: $21.26
Supplemental Benefit Rate per Hour: $15.80

House Wrecker - Third Year

Effective Period: 7/1/2012 - 12/31/2012
Wage Rate per Hour: $22.56
Supplemental Benefit Rate per Hour: $15.45

Effective Period: 1/1/2013 - 6/30/2013
Wage Rate per Hour: $22.81
Supplemental Benefit Rate per Hour: $15.80

House Wrecker - Fourth Year

Effective Period: 7/1/2012 - 12/31/2012
Wage Rate per Hour: $25.06
Supplemental Benefit Rate per Hour: $15.45

Effective Period: 1/1/2013 - 6/30/2013
Wage Rate per Hour: $25.36
Supplemental Benefit Rate per Hour: $15.80

(Local #79)

IRON WORKER - ORNAMENTAL
(Ratio of Apprentice to Journeyperson: 1 to 1, 1 to 4)

Iron Worker (Ornamental) - 1st Four Months - Hired on or Before 8/1/08

Effective Period: 7/1/2012 - 6/30/2013
Wage Rate Per Hour: 60% of Journeyperson's rate
Supplemental Rate Per Hour: $32.06

Iron Worker (Ornamental) 5 - 10 Months - Hired on or Before 8/1/08

Effective Period: 7/1/2012 - 6/30/2013
Wage Rate Per Hour: 65% of Journeyperson's rate
Supplemental Rate Per Hour: $32.89

Iron Worker (Ornamental) 11 - 16 Months - Hired on or Before 8/1/08

Effective Period: 7/1/2012 - 12/31/2012
Wage Rate Per Hour: 70% of Journeyperson's rate
Supplemental Rate Per Hour: $33.73

Effective Period: 1/1/2013 - 6/30/2013
Wage Rate Per Hour: 70% of Journeyperson's rate
Supplemental Rate Per Hour: $34.34

Iron Worker (Ornamental) 17 - 22 Months - Hired on or Before 8/1/08

Effective Period: 7/1/2012 - 6/30/2013
Wage Rate Per Hour: 80% of Journeyperson's rate
Supplemental Rate Per Hour: $35.39

Iron Worker (Ornamental) 23 - 28 Months - Hired on or Before 8/1/08

Effective Period: 7/1/2012 - 6/30/2013
Wage Rate Per Hour: 85% of Journeyperson's rate
Supplemental Rate Per Hour: $36.22

Iron Worker (Ornamental) 29 - 36 Months - Hired on or Before 8/1/08

Effective Period: 7/1/2012 - 6/30/2013
Wage Rate Per Hour: 95% of Journeyperson's rate
Supplemental Rate Per Hour: $37.89

Iron Worker (Ornamental) - 1st Ten Months - Hired After 8/1/08

Effective Period: 7/1/2012 - 12/31/2012
Wage Rate Per Hour: 50% of Journeyperson's rate
Supplemental Rate Per Hour: $30.40

Effective Period: 1/1/2013 - 6/30/2013
Wage Rate Per Hour: 50% of Journeyperson's rate
Supplemental Rate Per Hour: $33.39

Iron Worker (Ornamental) - 11 - 16 Months - Hired After 8/1/08

Effective Period: 7/1/2012 - 12/31/2012
Wage Rate Per Hour: 55% of Journeyperson's rate
Supplemental Rate Per Hour: $31.23

Effective Period: 1/1/2013 - 6/30/2013
Wage Rate Per Hour: 55% of Journeyperson's rate
Supplemental Rate Per Hour: $34.34

Iron Worker (Ornamental) - 17 - 22 Months - Hired After 8/1/08

Effective Period: 7/1/2012 - 12/31/2012
Wage Rate Per Hour: 60% of Journeyperson's rate
Supplemental Rate Per Hour: $32.06

Effective Period: 1/1/2013 - 6/30/2013
Wage Rate Per Hour: 60% of Journeyperson's rate
Supplemental Rate Per Hour: $35.29

Iron Worker (Ornamental) - 23 - 28 Months - Hired After 8/1/08

Effective Period: 7/1/2012 - 12/31/2012
Wage Rate Per Hour: 70% of Journeyperson's rate
Supplemental Rate Per Hour: $33.73

Effective Period: 1/1/2013 - 6/30/2013
Wage Rate Per Hour: 70% of Journeyperson's rate
Supplemental Rate Per Hour: $37.19

Iron Worker (Ornamental) - 29 - 36 Months - Hired After 8/1/08

Effective Period: 7/1/2012 - 12/31/2012
Wage Rate Per Hour: 80% of Journeyperson's rate
Supplemental Rate Per Hour: $35.39

Effective Period: 1/1/2013 - 6/30/2013
Wage Rate Per Hour: 80% of Journeyperson's rate
Supplemental Rate Per Hour: $39.09

(Local #580)

IRON WORKER - STRUCTURAL
(Ratio of Apprentice to Journeyperson: 1 to 1, 1 to 6)

Iron Worker (Structural) - 1st Six Months

Effective Period: 7/1/2012 - 12/31/2012
Wage Rate per Hour: $23.62
Supplemental Benefit Rate per Hour: $41.21

Effective Period: 1/1/2013 - 6/30/2013
Wage Rate per Hour: $24.10
Supplemental Benefit Rate per Hour: $43.12

Iron Worker (Structural) - 7- 18 Months

Effective Period: 7/1/2012 - 12/31/2012
Wage Rate per Hour: $24.22
Supplemental Benefit Rate per Hour: $41.21

Effective Period: 1/1/2013 - 6/30/2013
Wage Rate per Hour: $24.70
Supplemental Benefit Rate per Hour: $43.12

Iron Worker (Structural) - 19 - 36 months

Effective Period: 7/1/2012 - 12/31/2012
Wage Rate per Hour: $24.82
Supplemental Benefit Rate per Hour: $41.21

Effective Period: 1/1/2013 - 6/30/2013
Wage Rate per Hour: $25.30
Supplemental Benefit Rate per Hour: $43.12

(Local #40 and #361)

LABORER (FOUNDATION, CONCRETE, EXCAVATING, STREET PIPE LAYER & COMMON)
(Ratio Apprentice to Journeyperson: 1 to 1, 1 to 3)

Laborer (Foundation, Concrete, Excavating, Street Pipe Layer & Common) - First 1000 hours

Effective Period: 7/1/2012 - 6/30/2013
Wage Rate Per Hour: 50% of Journeyperson's rate
Supplemental Rate Per Hour: $31.75

Laborer (Foundation, Concrete, Excavating, Street Pipe Layer & Common) - Second 1000 hours

Effective Period: 7/1/2012 - 6/30/2013
Wage Rate Per Hour: 60% of Journeyperson's rate
Supplemental Rate Per Hour: $31.75

Laborer (Foundation, Concrete, Excavating, Street Pipe Layer & Common) - Third 1000 hours

Effective Period: 7/1/2012 - 6/30/2013
Wage Rate Per Hour: 75% of Journeyperson's rate
Supplemental Rate Per Hour: $31.75

Laborer (Foundation, Concrete, Excavating, Street Pipe Layer & Common) - Fourth 1000 hours

Effective Period: 7/1/2012 - 6/30/2013
Wage Rate Per Hour: 90% of Journeyperson's rate
Supplemental Rate Per Hour: $31.75

(Local #731)

MARBLE MECHANICS
(Ratio of Apprentice to Journeyperson: 1 to 1, 1 to 4)

Cutters & Setters - First 750 Hours

Effective Period: 7/1/2012 - 6/30/2013
Wage and Supplemental Rate Per Hour: 50% of Journeyperson's rate

NO BENEFITS PAID DURING THE FIRST TWO MONTHS (PROBATIONARY PERIOD)

Cutters & Setters - Second 750 Hours

Effective Period: 7/1/2012 - 6/30/2013
Wage and Supplemental Rate Per Hour: 55% of Journeyperson's rate

Cutters & Setters - Third 750 Hours

Effective Period: 7/1/2012 - 6/30/2013
Wage and Supplemental Rate Per Hour: 65% of Journeyperson's rate

Cutters & Setters - Fourth 750 Hours

Effective Period: 7/1/2012 - 6/30/2013
Wage and Supplemental Rate Per Hour: 75% of Journeyperson's rate

Cutters & Setters - Fifth 750 Hours

Effective Period: 7/1/2012 - 6/30/2013
Wage and Supplemental Rate Per Hour: 85% of Journeyperson's rate

Cutters & Setters - Sixth 750 Hours

Effective Period: 7/1/2012 - 6/30/2013
Wage and Supplemental Rate Per Hour: 95% of Journeyperson's rate

Polishers & Finishers - First 750 Hours

Effective Period: 7/1/2012 - 6/30/2013
Wage and Supplemental Rate Per Hour: 50% of Journeyperson's rate

NO BENEFITS PAID DURING THE FIRST TWO MONTHS (PROBATIONARY PERIOD)

Polishers & Finishers - Second 750 Hours

Effective Period: 7/1/2012 - 6/30/2013
Wage and Supplemental Rate Per Hour: 60% of Journeyperson's rate

Polishers & Finishers - Third 750 Hours

Effective Period: 7/1/2012 - 6/30/2013
Wage and Supplemental Rate Per Hour: 75% of Journeyperson's rate

Polishers & Finishers - Fourth 750 Hours

Effective Period: 7/1/2012 - 6/30/2013
Wage and Supplemental Rate Per Hour: 90% of Journeyperson's rate

(Local #7)

MASON TENDER
(Ratio of Apprentice to Journeyperson: 1 to 1, 1 to 3)

Mason Tender - First Year

Effective Period: 7/1/2012 - 12/31/2012
Wage Rate per Hour: $20.33
Supplemental Benefit Rate per Hour: $16.16

Effective Period: 1/1/2013 - 6/30/2013
Wage Rate per Hour: $20.48
Supplemental Benefit Rate per Hour: $16.51

Mason Tender - Second Year

Effective Period: 7/1/2012 - 12/31/2012
Wage Rate per Hour: $21.33
Supplemental Benefit Rate per Hour: $16.16

Effective Period: 1/1/2013 - 6/30/2013
Wage Rate per Hour: $21.53
Supplemental Benefit Rate per Hour: $16.51

Mason Tender - Third Year

Effective Period: 7/1/2012 - 12/31/2012
Wage Rate per Hour: $22.83

Supplemental Benefit Rate per Hour: $16.16

Effective Period: 1/1/2013 - 6/30/2013
Wage Rate per Hour: $23.08
Supplemental Benefit Rate per Hour: $16.51

Mason Tender - Fourth Year

Effective Period: 7/1/2012 - 12/31/2012
Wage Rate per Hour: $25.33
Supplemental Benefit Rate per Hour: $16.16

Effective Period: 1/1/2013 - 6/30/2013
Wage Rate per Hour: $25.63
Supplemental Benefit Rate per Hour: $16.51

(Local #79)

METALLIC LATHER
(Ratio of Apprentice to Journeyperson: 1 to 1, 1 to 3)

Metallic Lather (First Year -Called Prior to 6/29/11)

Effective Period: 7/1/2012 - 6/30/2013
Wage Rate per Hour: $27.91
Supplemental Benefit Rate per Hour: $22.79

Metallic Lather (Second Year - Called Prior to 6/29/11)

Effective Period: 7/1/2012 - 6/30/2013
Wage Rate per Hour: $32.51
Supplemental Benefit Rate per Hour: $24.44

Metallic Lather (Third Year - Called Prior to 6/29/11)

Effective Period: 7/1/2012 - 6/30/2013
Wage Rate per Hour: $37.57
Supplemental Benefit Rate per Hour: $25.59

Metallic Lather (First Year -Called On Or After 6/29/11)

Effective Period: 7/1/2012 - 6/30/2013
Wage Rate per Hour: $17.71
Supplemental Benefit Rate per Hour: $19.85

Metallic Lather (Second Year - Called On Or After 6/29/11)

Effective Period: 7/1/2012 - 6/30/2013
Wage Rate per Hour: $22.71
Supplemental Benefit Rate per Hour: $19.85

Metallic Lather (Third Year - Called On Or After 6/29/11)

Effective Period: 7/1/2012 - 6/30/2013
Wage Rate per Hour: $27.71
Supplemental Benefit Rate per Hour: $19.85

(Local #46)

MILLWRIGHT
(Ratio of Apprentice to Journeyperson: 1 to 1, 1 to 4)

Millwright (First Year)

Effective Period: 7/1/2012 - 6/30/2013
Wage Rate per Hour: $25.40
Supplemental Benefit Rate per Hour: $28.67

Millwright (Second Year)

Effective Period: 7/1/2012 - 6/30/2013
Wage Rate per Hour: $30.02
Supplemental Benefit Rate per Hour: $31.87

Millwright (Third Year)

Effective Period: 7/1/2012 - 6/30/2013
Wage Rate per Hour: $34.64
Supplemental Benefit Rate per Hour: $36.19

Millwright (Fourth Year)

Effective Period: 7/1/2012 - 6/30/2013
Wage Rate per Hour: $43.88
Supplemental Benefit Rate per Hour: $41.50

Local #740)

PAVER AND ROADBUILDER
(Ratio of Apprentice to Journeyperson: 1 to 1, 1 to 3)

Paver and Roadbuilder - First Year (Minimum 1000 hours)

Effective Period: 7/1/2012 - 6/30/2013
Wage Rate per Hour: $25.72
Supplemental Benefit Rate per Hour: $15.75

Paver and Roadbuilder - Second Year (Minimum 1000 hours)

Effective Period: 7/1/2012 - 6/30/2013
Wage Rate per Hour: $27.29
Supplemental Benefit Rate per Hour: $15.75

(Local #1010)

PAINTER
(Ratio of Apprentice to Journeyperson: 1 to 1, 1 to 3)

Painter - Brush & Roller - First Year

Effective Period: 7/1/2012 - 10/31/2012
Wage Rate per Hour: $14.20
Supplemental Benefit Rate per Hour: $10.88

Effective Period: 11/1/2012 - 6/30/2013
Wage Rate per Hour: $14.40
Supplemental Benefit Rate per Hour: $10.88

Painter - Brush & Roller - Second Year

Effective Period: 7/1/2012 - 10/31/2012
Wage Rate per Hour: $17.75
Supplemental Benefit Rate per Hour: $14.73

Effective Period: 11/1/2012 - 6/30/2013
Wage Rate per Hour: $18.00
Supplemental Benefit Rate per Hour: $14.73

Painter - Brush & Roller - Third Year

Effective Period: 7/1/2012 - 10/31/2012
Wage Rate per Hour: $21.30
Supplemental Benefit Rate per Hour: $17.64

Effective Period: 11/1/2012 - 6/30/2013
Wage Rate per Hour: $21.60
Supplemental Benefit Rate per Hour: $17.64

Painter - Brush & Roller - Fourth Year

Effective Period: 7/1/2012 - 10/31/2012
Wage Rate per Hour: $28.40
Supplemental Benefit Rate per Hour: $23.02

Effective Period: 11/1/2012 - 6/30/2013
Wage Rate per Hour: $28.80
Supplemental Benefit Rate per Hour: $23.02

(District Council of Painters)

PAINTER - STRUCTURAL STEEL
(Ratio of Apprentice to Journeyperson: 1 to 1, 1 to 3)

Painters - Structural Steel (First Year)

Effective Period: 7/1/2012 - 6/30/2013
Wage and Supplemental Rate Per Hour: 40% of Journeyperson's rate

Painters - Structural Steel (Second Year)

Effective Period: 7/1/2012 - 6/30/2013
Wage and Supplemental Rate Per Hour: 60% of Journeyperson's rate

Painters - Structural Steel (Third Year)

Effective Period: 7/1/2012 - 6/30/2013
Wage and Supplemental Rate Per Hour: 80% of Journeyperson's rate

(Local #806)

PLASTERER
(Ratio of Apprentice to Journeyperson: 1 to 1, 1 to 3)

Plasterer - First Year: 1st Six Months

Effective Period: 7/1/2012 - 12/31/2012
Wage Rate Per Hour: 40% of Journeyperson's rate
Supplemental Rate Per Hour: $14.61

Effective Period: 1/1/2013 - 6/30/2013
Wage Rate Per Hour: 40% of Journeyperson's rate
Supplemental Rate Per Hour: $15.36

Plasterer - First Year: 2nd Six Months

Effective Period: 7/1/2012 - 12/31/2012
Wage Rate Per Hour: 45% of Journeyperson's rate
Supplemental Rate Per Hour: $15.09

Effective Period: 1/1/2013 - 6/30/2013
Wage Rate Per Hour: 45% of Journeyperson's rate
Supplemental Rate Per Hour: $15.84

Plasterer - Second Year: 1st Six Months

Effective Period: 7/1/2012 - 12/31/2012
Wage Rate Per Hour: 55% of Journeyperson's rate
Supplemental Rate Per Hour: $17.06

Effective Period: 1/1/2013 - 6/30/2013
Wage Rate Per Hour: 55% of Journeyperson's rate
Supplemental Rate Per Hour: $17.81

Plasterer - Second Year: 2nd Six Months

Effective Period: 7/1/2012 - 12/31/2012
Wage Rate Per Hour: 60% of Journeyperson's rate
Supplemental Rate Per Hour: $18.14

Effective Period: 1/1/2013 - 6/30/2013
Wage Rate Per Hour: 60% of Journeyperson's rate
Supplemental Rate Per Hour: $18.89

Plasterer - Third Year: 1st Six Months

Effective Period: 7/1/2012 - 12/31/2012
Wage Rate Per Hour: 70% of Journeyperson's rate
Supplemental Rate Per Hour: $20.31

Effective Period: 1/1/2013 - 6/30/2013
Wage Rate Per Hour: 70% of Journeyperson's rate
Supplemental Rate Per Hour: $21.06

Plasterer - Third Year: 2nd Six Months

Effective Period: 7/1/2012 - 12/31/2012
Wage Rate Per Hour: 75% of Journeyperson's rate
Supplemental Rate Per Hour: $21.39

Effective Period: 1/1/2013 - 6/30/2013
Wage Rate Per Hour: 75% of Journeyperson's rate
Supplemental Rate Per Hour: $22.14

(Local #530)

PLUMBER
(Ratio of Apprentice to Journeyperson: 1 to 1, 1 to 3)

Plumber - First Year: 1st Six Months

Effective Period: 7/1/2012 - 6/30/2013
Wage Rate per Hour: $14.00
Supplemental Benefit Rate per Hour: $0.71

Plumber - First Year: 2nd Six Months

Effective Period: 7/1/2012 - 6/30/2013
Wage Rate per Hour: $14.00
Supplemental Benefit Rate per Hour: $2.96

Plumber - Second Year

Effective Period: 7/1/2012 - 12/31/2012
Wage Rate per Hour: $17.96
Supplemental Benefit Rate per Hour: $16.25

Effective Period: 1/1/2013 - 6/30/2013
Wage Rate per Hour: $18.26
Supplemental Benefit Rate per Hour: $16.32

Plumber - Third Year

Effective Period: 7/1/2012 - 12/31/2012

Wage Rate per Hour: $20.06
Supplemental Benefit Rate per Hour: $16.25

Effective Period: 1/1/2013 - 6/30/2013
Wage Rate per Hour: $20.36
Supplemental Benefit Rate per Hour: $16.32

Plumber - Fourth Year

Effective Period: 7/1/2012 - 12/31/2012
Wage Rate per Hour: $22.91
Supplemental Benefit Rate per Hour: $16.25

Effective Period: 1/1/2013 - 6/30/2013
Wage Rate per Hour: $23.21
Supplemental Benefit Rate per Hour: $16.32

Plumber - Fifth Year: 1st Six Months

Effective Period: 7/1/2012 - 12/31/2012
Wage Rate per Hour: $24.31
Supplemental Benefit Rate per Hour: $16.25

Effective Period: 1/1/2013 - 6/30/2013
Wage Rate per Hour: $24.61
Supplemental Benefit Rate per Hour: $16.32

Plumber - Fifth Year: 2nd Six Months

Effective Period: 7/1/2012 - 12/31/2012
Wage Rate per Hour: $36.38
Supplemental Benefit Rate per Hour: $16.25

Effective Period: 1/1/2013 - 6/30/2013
Wage Rate per Hour: $36.68
Supplemental Benefit Rate per Hour: $16.32

(Plumbers Local #1)

POINTER - WATERPROOFER, CAULKER MECHANIC (EXTERIOR BUILDING RENOVATION)
(Ratio of Apprentice to Journeyperson: 1 to 1, 1 to 4)

Pointer - Waterproofer, Caulker Mechanic - First Year

Effective Period: 7/1/2012 - 6/30/2013
Wage Rate per Hour: $25.00
Supplemental Benefit Rate per Hour: $3.45

Pointer - Waterproofer, Caulker Mechanic - Second Year

Effective Period: 7/1/2012 - 6/30/2013
Wage Rate per Hour: $27.25
Supplemental Benefit Rate per Hour: $8.40

Pointer - Waterproofer, Caulker Mechanic - Third Year

Effective Period: 7/1/2012 - 6/30/2013
Wage Rate per Hour: $32.23
Supplemental Benefit Rate per Hour: $11.15

Pointer - Waterproofer, Caulker Mechanic - Fourth Year

Effective Period: 7/1/2012 - 6/30/2013
Wage Rate per Hour: $38.66
Supplemental Benefit Rate per Hour: $11.15

(Bricklayer District Council)

ROOFER
(Ratio of Apprentice to Journeyperson: 1 to 1, 1 to 2)

Roofer - First Year

Effective Period: 7/1/2012 - 6/30/2013
Wage and Supplemental Rate Per Hour: 35% of Journeyperson's Rate

Roofer - Second Year

Effective Period: 7/1/2012 - 6/30/2013
Wage and Supplemental Rate Per Hour: 50% of Journeyperson's Rate

Roofer - Third Year

Effective Period: 7/1/2012 - 6/30/2013
Wage and Supplemental Rate Per Hour: 60% of Journeyperson's Rate

Roofer - Fourth Year

Effective Period: 7/1/2012 - 6/30/2013
Wage and Supplemental Rate Per Hour: 75% of Journeyperson's Rate

(Local #8)

SHEET METAL WORKER
(Ratio of Apprentice to Journeyperson: 1 to 1, 1 to 3)

Sheet Metal Worker - First Year

Effective Period: 7/1/2012 - 6/30/2013
Wage Rate Per Hour: 30% of Journeyperson's rate
Supplemental Rate Per Hour: $15.37

Sheet Metal Worker - Second Year

Effective Period: 7/1/2012 - 6/30/2013
Wage Rate Per Hour: 35% of Journeyperson's rate
Supplemental Rate Per Hour: $18.24

Sheet Metal Worker - Third Year (1st Six Months)

Effective Period: 7/1/2012 - 6/30/2013
Wage Rate Per Hour: 40% of Journeyperson's rate
Supplemental Rate Per Hour: $20.06

Sheet Metal Worker - Third Year (2nd Six Months)

Effective Period: 7/1/2012 - 6/30/2013
Wage Rate Per Hour: 45% of Journeyperson's rate
Supplemental Rate Per Hour: $21.87

Sheet Metal Worker - Fourth Year (1st Six Months)

Effective Period: 7/1/2012 - 6/30/2013
Wage Rate Per Hour: 50% of Journeyperson's rate
Supplemental Rate Per Hour: $23.69

Sheet Metal Worker - Fourth Year (2nd Six Months)

Effective Period: 7/1/2012 - 6/30/2013
Wage Rate Per Hour: 55% of Journeyperson's rate
Supplemental Rate Per Hour: $25.33

Sheet Metal Worker - Fifth Year (1st Six Months)

Effective Period: 7/1/2012 - 6/30/2013
Wage Rate Per Hour: 60% of Journeyperson's rate
Supplemental Rate Per Hour: $27.47

Sheet Metal Worker - Fifth Year(2nd Six Months)

Effective Period: 7/1/2012 - 6/30/2013
Wage Rate Per Hour: 70% of Journeyperson's rate
Supplemental Rate Per Hour: $31.23

(Local #28)

SIGN ERECTOR
(Ratio of Apprentice to Journeyperson: 1 to 1, 1 to 4)

Sign Erector - First Year: 1st Six Months

Effective Period: 7/1/2012 - 6/30/2013
Wage Rate Per Hour: 35% of Journeyperson's rate
Supplemental Rate Per Hour: $5.96

Sign Erector - First Year: 2nd Six Months

Effective Period: 7/1/2012 - 6/30/2013
Wage Rate Per Hour: 40% of Journeyperson's rate
Supplemental Rate Per Hour: $6.75

Sign Erector - Second Year: 1st Six Months

Effective Period: 7/1/2012 - 6/30/2013
Wage Rate Per Hour: 45% of Journeyperson's rate
Supplemental Rate Per Hour: $7.55

Sign Erector - Second Year: 2nd Six Months

Effective Period: 7/1/2012 - 6/30/2013
Wage Rate Per Hour: 50% of Journeyperson's rate
Supplemental Rate Per Hour: $8.34

Sign Erector - Third Year: 1st Six Months

Effective Period: 7/1/2012 - 6/30/2013
Wage Rate Per Hour: 55% of Journeyperson's rate
Supplemental Rate Per Hour: $9.13

Sign Erector - Third Year: 2nd Six Months

Effective Period: 7/1/2012 - 6/30/2013
Wage Rate Per Hour: 60% of Journeyperson's rate
Supplemental Rate Per Hour: $9.92

Sign Erector - Fourth Year: 1st Six Months

Effective Period: 7/1/2012 - 6/30/2013
Wage Rate Per Hour: 65% of Journeyperson's rate
Supplemental Rate Per Hour: $10.72

Sign Erector - Fourth Year: 2nd Six Months

Effective Period: 7/1/2012 - 6/30/2013
Wage Rate Per Hour: 70% of Journeyperson's rate
Supplemental Rate Per Hour: $11.51

Sign Erector - Fifth Year

Effective Period: 7/1/2012 - 6/30/2013
Wage Rate Per Hour: 75% of Journeyperson's rate
Supplemental Rate Per Hour: $12.30

Sign Erector - Sixth Year

Effective Period: 7/1/2012 - 6/30/2013
Wage Rate Per Hour: 80% of Journeyperson's rate
Supplemental Rate Per Hour: $12.30

(Local #137)

STEAMFITTER
(Ratio of Apprentice to Journeyperson: 1 to 1, 1 to 3)

Steamfitter - First Year

Effective Period: 7/1/2012 - 6/30/2013
Wage Rate and Supplemental Per Hour: 40% of Journeyperson's rate

Steamfitter - Second Year

Effective Period: 7/1/2012 - 6/30/2013
Wage Rate and Supplemental Rate Per Hour: 50% of Journeyperson's rate.

Steamfitter - Third Year

Effective Period: 7/1/2012 - 6/30/2013
Wage Rate and Supplemental Rate per Hour: 65% of Journeyperson's rate.

Steamfitter - Fourth Year

Effective Period: 7/1/2012 - 6/30/2013
Wage Rate and Supplemental Rate Per Hour: 80% of Journeyperson's rate.

Steamfitter - Fifth Year

Effective Period: 7/1/2012 - 6/30/2013
Wage Rate and Supplemental Rate Per Hour: 85% of Journeyperson's rate.

(Local #638)

STONE MASON - SETTER
(Ratio Apprentice of Journeyperson: 1 to 1, 1 to 2)

Stone Mason - Setters - First 750 Hours

Effective Period: 7/1/2012 - 6/30/2013
Wage and Supplemental Rate Per Hour: 50% of Journeyperson's rate

Stone Mason - Setters - Second 750 Hours

Effective Period: 7/1/2012 - 6/30/2013
Wage Rate Per Hour: 60% of Journeyperson's rate
Supplemental Rate Per Hour: 50% of Journeyperson's rate

Stone Mason - Setters - Third 750 Hours

Effective Period: 7/1/2012 - 6/30/2013
Wage Rate Per Hour: 70% of Journeyperson's rate
Supplemental Rate Per Hour: 50% of Journeyperson's rate

Stone Mason - Setters - Fourth 750 Hours

Effective Period: 7/1/2012 - 6/30/2013
Wage Rate Per Hour: 80% of Journeyperson's rate
Supplemental Rate Per Hour: 50% of Journeyperson's rate

Stone Mason - Setters - Fifth 750 Hours

Effective Period: 7/1/2012 - 6/30/2013
Wage Rate Per Hour: 90% of Journeyperson's rate
Supplemental Rate Per Hour: 50% of Journeyperson's rate

Stone Mason - Setters - Sixth 750 Hours

Effective Period: 7/1/2012 - 6/30/2013
Wage Rate Per Hour: 100% of Journeyperson's rate
Supplemental Rate Per Hour: 50% of Journeyperson's rate

(Bricklayers District Council)

TAPER
(Ratio of Apprentice to Journeyperson: 1 to 1, 1 to 4)

Drywall Taper - First Year

Effective Period: 7/1/2012 - 6/30/2013
Wage and Supplemental Rate Per Hour: 40% of Journeyperson's rate

Drywall Taper - Second Year

Effective Period: 7/1/2012 - 6/30/2013
Wage and Supplemental Rate Per Hour: 60% of Journeyperson's rate

Drywall Taper - Third Year

Effective Period: 7/1/2012 - 6/30/2013
Wage and Supplemental Rate Per Hour: 80% of Journeyperson's rate

(Local #1974)

TILE LAYER - SETTER
(Ratio of Apprentice to Journeyperson: 1 to 1, 1 to 4)

Tile Layer - Setter - First 750 Hours

Effective Period: 7/1/2012 - 6/30/2013
Wage and Supplemental Rate Per Hour: 50% of Journeyperson's rate

Tile Layer - Setter - Second 750 Hours

Effective Period: 7/1/2012 - 6/30/2013
Wage and Supplemental Rate Per Hour: 55% of Journeyperson's rate

Tile Layer - Setter - Third 750 Hours

Effective Period: 7/1/2012 - 6/30/2013
Wage and Supplemental Rate Per Hour: 65% of Journeyperson's rate

Tile Layer - Setter - Fourth 750 Hours

Effective Period: 7/1/2012 - 6/30/2013
Wage and Supplemental Rate Per Hour: 75% of Journeyperson's rate

Tile Layer - Setter - Fifth 750 Hours

Effective Period: 7/1/2012 - 6/30/2013
Wage and Supplemental Rate Per Hour: 85% of Journeyperson's rate

Tile Layer - Setter - Sixth 750 Hours

Effective Period: 7/1/2012 - 6/30/2013
Wage and Supplemental Rate Per Hour: 95% of Journeyperson's rate

(Local #7)

TIMBERPERSON
(Ratio of Apprentice to Journeyperson: 1 to 1, 1 to 6)

Timberperson - First Year

Effective Period: 7/1/2012 - 6/30/2013
Wage Rate Per Hour: 40% of Journeyperson's rate
Supplemental Rate Per Hour: $27.49

Timberperson - Second Year

Effective Period: 7/1/2012 - 6/30/2013
Wage Rate Per Hour: 50% of Journeyperson's rate
Supplemental Rate Per Hour: $27.49

Timberperson - Third Year

Effective Period: 7/1/2012 - 6/30/2013
Wage Rate Per Hour: 65% of Journeyperson's rate

Supplemental Rate Per Hour: $27.49

Timberperson - Fourth Year

Effective Period: 7/1/2012 - 6/30/2013
Wage Rate Per Hour: 80% of Journeyperson's rate
Supplemental Rate Per Hour: $27.49

(Local #1536)

NYC ADMINISTRATIVE CODE § 6-109 SCHEDULE OF "LIVING WAGES"

Contractors who provide the following services to the City of New York must post a copy of this Living Wage Schedule at their work site(s) as required by New York City Administrative Code § 6-109:

- Building Services,
- Day Care Services,
- Food Services,
- Head Start Services,
- Homecare Services,
- Services to Persons with Cerebral Palsy, and
- Temporary Services.

In accordance with NYC Administrative Code § 6-109, the Comptroller of the City of New York promulgated this schedule of living wages for the above services on contracts for non-emergency work in excess of the small purchase limit set by the Procurement Policy Board; contracting agencies must annex this schedule to such contracts.

A city service contractor or subcontractor that provides homecare services, day care services, head start services or services to persons with cerebral palsy must pay its covered employees that directly render such services in performance of the city service contract or subcontract no less than the living wage and must provide its employees health benefits (supplemental benefits) or must supplement their hourly wage rate by an amount no less than the health benefits supplement rate. This requirement applies for each hour that the employee works performing the city service contract or subcontract.

A city service contractor or subcontractor that provides building services, food services or temporary services must pay its employees that are engaged in performing the city service contract or subcontract no less than the living wage or the prevailing wage, whichever is greater. Where the living wage is greater than the prevailing wage, the city service contractor or subcontractor must either provide its employees health benefits or must supplement their hourly wage rate by an amount no less than the health benefits supplement rate. Where the prevailing wage is greater than the living wage, the city service contractor or subcontractor must provide its employees the prevailing wage and supplements. These requirements apply for each hour that the employee works performing the city service contract or subcontract.

The appropriate schedule of living wages must be posted at all work sites pursuant to NYC Administrative Code 6-109.

The schedule is applicable for work performed during the effective period, unless otherwise noted. You will be notified of any changes to this schedule by addenda published on our web site www.comptroller.nyc.gov. Schedules for future one-year periods will be published annually in the City Record on or about July 1st of each succeeding year and on our web site www.comptroller.nyc.gov.

The living wage rate and the health benefit supplement rate are known through June 30 of each year and those rates are listed in this schedule.

The living wage rates listed in this schedule may not include all hourly wage calculations for overtime, shift differential, Holiday, Saturday, Sunday or other premium time work. Similarly, this schedule does not set forth every living wage practice with which employers must comply.

Some of the rates in this schedule are based on collective bargaining agreements. These agreements are available for inspection by appointment. Requests for appointments may be made by calling (212) 669-4443, Monday through Friday between the hours of 9 a.m. and 5 p.m.

Answers to questions concerning prevailing wage practices may be obtained from the Classification Unit by calling (212) 669-7974. Please direct all other compliance issues to; Bureau of Labor Law, Attn: Wasyl Kinach, P.E., Office of the Comptroller, 1 Centre Street, Room 1122, New York, N.Y. 10007; Fax (212) 669-4002.

Contractors are solely responsible for maintaining original payroll records, which delineate, among other things, the hours each employee worked within a given classification. Contractors using rates and/or classifications not promulgated by the Comptroller do so at their own risk. Additionally, prior to bid, an agency's chief contracting officer must contact the Bureau of Labor Law to obtain a wage determination for a work classification not published in this schedule.

The information listed below is intended to assist you in meeting your living wage and prevailing wage obligation. Contractors are advised to review the Comptroller's Living Wage Schedule prior to submitting a bid for City work. Any wage rate error made by the contracting agency in the contract documents will not preclude a finding against the contractor for an underpayment of the applicable living wage or the applicable prevailing wage.

This schedule sets forth the living wage and benefit rates required to be annexed to and form part of the contract specifications for work covered by New York City Administrative Code § 6-109. Contractors performing such work are required to pay not less that the rates specified in this schedule for the applicable trade or occupation.

Benefits are paid for *EACH HOUR WORKED* unless otherwise noted.

Wasyl Kinach, P.E.
Director of Classifications
Bureau of Labor Law

TABLE OF CONTENTS

BUILDING CLEANER AND MAINTAINER (OFFICE)

Office Building Class "A" Cleaner/Porter, Elevator Operator, Exterminator, Fire Safety Director (Over 280,000 square feet gross area)

Effective Period: 7/1/2012 - 12/31/2012
Wage Rate per Hour: $22.65
Supplemental Benefit Rate per Hour: $9.13
Supplemental Note: for new employee 0-12 months of employment - $6.64; for new employee 13-24 months of employment - $8.81

Effective Period: 1/1/2013 - 6/30/2013
Wage Rate per Hour: $22.97
Supplemental Benefit Rate per Hour: $9.51
Supplemental Note: for new employee 0-12 months of employment - $6.92; for new employee 13-24 months of employment - $9.18

NEW HIRE: Cleaner/Porter, Elevator Operator, Exterminator, Fire Safety Director may be paid 75% of the wage rate above for the first 21 months of employment, 85% of the wage rate above for the 22nd through 42nd months of employment, and upon the completion of 42 months of employment employee shall be paid the full wage rate. Note: New Hires hired before January 1, 2012 will continue to receive 80% of the wage rate above for the first 30 months, and upon the completion of 30 months of employment employee shall be paid the full wage rate. Upon completion of two years of employment the new hire receives the full supplemental benefit rate.

Office Building Class "B" Cleaner/Porter, Elevator Operator, Exterminator, Fire Safety Director (Over 120,000 and less than 280,000 square feet gross area)

Effective Period: 7/1/2012 - 12/31/2012
Wage Rate per Hour: $22.62
Supplemental Benefit Rate per Hour: $9.13
Supplemental Note: for new employee 0-12 months of employment - $6.64; for new employee 13-24 months of employment - $8.81

Effective Period: 1/1/2013 - 6/30/2013
Wage Rate per Hour: $22.94
Supplemental Benefit Rate per Hour: $9.51
Supplemental Note: for new employee 0-12 months of employment - $6.92; for new employee 13-24 months of employment - $9.18

NEW HIRE: Cleaner/Porter, Elevator Operator, Exterminator, Fire Safety Director may be paid 75% of the wage rate above for the first 21 months of employment, 85% of the wage rate above for the 22nd through 42nd months of employment, and upon the completion of 42 months of employment employee shall be paid the full wage rate. Note: New Hires hired before January 1, 2012 will continue to receive 80% of the wage rate above for the first 30 months, and upon the completion of 30 months of employment employee shall be paid the full wage rate. Upon completion of two years of employment the new hire receives the full supplemental benefit rate.

Office Building Class "C" Cleaner/Porter, Elevator Operator, Exterminator, Fire Safety Director (Less than 120,000 square feet gross area)

Effective Period: 7/1/2012 - 12/31/2012

Wage Rate per Hour: $22.57
Supplemental Benefit Rate per Hour: $9.13
Supplemental Note: for new employee 0-12 months of employment - $6.64; for new employee 13-24 months of employment - $8.81

Effective Period: 1/1/2013 - 6/30/2013
Wage Rate per Hour: $22.90
Supplemental Benefit Rate per Hour: $9.51
Supplemental Note: for new employee 0-12 months of employment - $6.92; for new employee 13-24 months of employment - $9.18

NEW HIRE: Cleaner/Porter, Elevator Operator, Exterminator, Fire Safety Director may be paid 75% of the wage rate above for the first 21 months of employment, 85% of the wage rate above for the 22nd through 42nd months of employment, and upon the completion of 42 months of employment employee shall be paid the full wage rate. Note: New Hires hired before January 1, 2012 will continue to receive 80% of the wage rate above for the first 30 months, and upon the completion of 30 months of employment employee shall be paid the full wage rate. Upon completion of two years of employment the new hire receives the full supplemental benefit rate.

Overtime

Time and one half the regular rate after an 8 hour day.
Time and one half the regular rate for work on a holiday plus the day's pay.
Time and one half the regular hourly rate after 40 hours in any work week.

Paid Holidays

New Year's Day
President's Day
Good Friday
Memorial Day
Independence Day
Labor Day
Columbus Day
Thanksgiving Day
Day after Thanksgiving
Christmas Day

Vacation

Less than 6 months of work.....no vacation
6 months of work.....three (3) days
1 year of work.....ten (10) days
5 years of work.....fifteen (15) days
15 years of work.....twenty (20) days
21 years of work.....twenty-one (21) days
22 years of work.....twenty-two (22) days
23 years of work.....twenty-three (23) days
24 years of work.....twenty-four (24) days
25 years or more of work.....twenty-five (25) days
Plus two Personal Days per year.

Sick Leave:
10 sick days per year.
Unused sick leave paid in the succeeding January, one full day pay for each unused sick day.

(Local #32 B/J)

BUILDING CLEANER AND MAINTAINER (RESIDENTIAL)

Residential Building Class "A" Cleaner/Porter

Residential Buildings Class "A": buildings where the assessed value of the land and building, based upon the 1935 assessment, divided by the number of rooms in the building, gives an assessed value of over $4000.00 a room.

Effective Period: 7/1/2012 - 4/20/2013
Wage Rate per Hour: $20.77
Supplemental Benefit Rate per Hour: $8.68
Supplemental Note: for new employee 0-12 months of employment - $6.37; for new employee 13-24 months of employment - $8.43
Effective 1/1/2013 - $9.43; for new employee 0-12 months of employment - $6.92; for new employee 13-24 months of employment - $9.18

Effective Period: 4/21/2013 - 6/30/2013
Wage Rate per Hour: $21.34
Supplemental Benefit Rate per Hour: $9.43
Supplemental Note: for new employee 0-12 months of employment - $6.92; for new employee 13-24 months of employment - $9.18

NEW HIRE: Porter/Cleaner, may be paid a starting rate of 80% of the hourly rate published above. Upon completion of 30 months of employment, the new hire shall be paid the full wage rate. Upon completion of two years of employment the new hire receives the full supplemental benefit rate.

Residential Building Class "B" Cleaner/Porter

Residential Building Class "B": buildings where the assessed value of the land and building, based upon the 1935 assessment, divided by the number of rooms in the building, gives an assessed value of over $2000.00 a room and not over $4000.00 a room.

Effective Period: 7/1/2012 - 4/20/2013
Wage Rate per Hour: $20.71
Supplemental Benefit Rate per Hour: $8.68
Supplemental Note: for new employee 0-12 months of employment - $6.37; for new employee 13-24 months of employment - $8.43
Effective 1/1/2013 - $9.43; for new employee 0-12 months of employment - $6.92; for new employee 13-24 months of employment - $9.18

Effective Period: 4/21/2013 - 6/30/2013
Wage Rate per Hour: $21.28
Supplemental Benefit Rate per Hour: $9.43
Supplemental Note: for new employee 0-12 months of employment - $6.92; for new employee 13-24 months of employment - $9.18

NEW HIRE: Porter/Cleaner, may be paid a starting rate of 80% of the hourly rate published above. Upon completion of 30 months of employment, the new hire shall be paid the full wage rate. Upon completion of two years of employment the new hire receives the full supplemental benefit rate.

Residential Building Class "C" Cleaner/Porter

Residential Building Class "C": buildings where the assessed value of the land and building, based upon the 1935 assessment, divided by the number of rooms in the building, gives an assessed value of $2000.00 or less a room.

Effective Period: 7/1/2012 - 4/20/2013
Wage Rate per Hour: $20.65
Supplemental Benefit Rate per Hour: $8.68
Supplemental Note: for new employee 0-12 months of employment - $6.37; for new employee 13-24 months of employment - $8.43
Effective 1/1/2013 - $9.43; for new employee 0-12 months of employment - $6.92; for new employee 13-24 months of employment - $9.18

Effective Period: 4/21/2013 - 6/30/2013
Wage Rate per Hour: $21.23
Supplemental Benefit Rate per Hour: $9.43
Supplemental Note: for new employee 0-12 months of employment - $6.92; for new employee 13-24 months of employment - $9.18

NEW HIRE: Porter/Cleaner, may be paid a starting rate of 80% of the hourly rate published above. Upon completion of 30 months of employment, the new hire shall be paid the full wage rate. Upon completion of two years of employment the new hire receives the full supplemental benefit rate.

Overtime

Time and one half the regular rate after an 8 hour day.
Time and one half the regular rate for work on a holiday plus the day's pay.
Time and one half the regular hourly rate after 40 hours in any work week.

Paid Holidays

New Year's Day
Martin Luther King Jr. Day
President's Day
Memorial Day
Independence Day
Labor Day
Columbus Day
Election Day
Thanksgiving Day
Christmas Day

Vacation

6 months.....three (3) days
1 year.....ten (10) days
5 years.....fifteen (15) days
15 years.....twenty (20) days
21 years.....twenty-one (21) days
22 years.....twenty-two (22) days
23 years.....twenty-three (23) days
24 years.....twenty-four (24) days
25 years.....twenty-five (25) days
Plus two Personal Days per year.

SICK LEAVE
After 1 year of service.....ten (10) days per year

(Local #32 B/J)

DAY CARE SERVICES

Day Care Services

'Day Care Services' means provision of day care services through the city's center-based day care program administered under contract with the city's Administration for Children's Services. No other day care programs shall be covered, including family-based day care programs administered by city-contracted day care centers.

Effective Period: 7/1/2012 - 6/30/2013
Wage Rate per Hour: $10.00
Supplemental Benefit Rate per Hour: $1.50

(NYC Administrative Code §6-109)

CLEANER (PARKING GARAGE)

Garage Cleaner

Effective Period: 7/1/2012 - 6/30/2013
Wage Rate per Hour: $10.00
Supplemental Benefit Rate per Hour: $1.50

Overtime
Time and one half the regular rate after an 8 hour day or after 40 hours in any work week.

(NYC Administrative Code §6-109)

FOOD SERVICE EMPLOYEES

Cook

Effective Period: 7/1/2012 - 6/30/2013
Wage Rate per Hour: $15.40
Supplemental Benefit Rate per Hour: $1.72

Cafeteria Attendant

Effective Period: 7/1/2012 - 6/30/2013

Wage Rate per Hour: $10.24
Supplemental Benefit Rate per Hour: $1.72

Counter Attendant

Effective Period: 7/1/2012 - 6/30/2013
Wage Rate per Hour: $10.31
Supplemental Benefit Rate per Hour: $1.72

Kitchen Helper / Dishwasher

Effective Period: 7/1/2012 - 6/30/2013
Wage Rate per Hour: $9.83
Supplemental Benefit Rate per Hour: $1.72

Overtime

Time and one half the regular hourly rate after 40 hours in any work week.

(Based on data from NYS Department of Labor Occupational Employment Statistics and US Department of Labor Bureau of Labor Statistics)

GARDENER

Gardener

Effective Period: 7/1/2012 - 6/30/2013
Wage Rate per Hour: $17.04
Supplemental Benefit Rate per Hour: $1.72

Overtime

Time and one half the regular rate after an 8 hour day or after 40 hours in any work week.

(Based on data from NYS Department of Labor Occupational Employment Statistics and US Department of Labor Bureau of Labor Statistics)

HEAD START SERVICES

Head Start Services

'Head Start Services' means provision of head start services through the city's center-based head start program administered under contract with the city's Administration for Children's Services. No other head start programs shall be covered.

Effective Period: 7/1/2012 - 6/30/2013

Wage Rate per Hour: $10.00
Supplemental Benefit Rate per Hour: $1.50

(NYC Administrative Code §6-109)

HOMECARE SERVICES

Home Care Services

'Homecare Services' means the provision of homecare services under the city's Medicaid Personal Care/Home Attendant or Housekeeping Programs, including but not limited to the In-Home Services for the Elderly Programs administered by the Department for the Aging.
For homecare services provided under the Personal Care Services program, the wage and supplemental benefit rate above shall apply only as long as the state and federal government maintain their combined aggregate proportionate share of funding and approved rates for homecare services in effect as of the date of the enactment of this section.
For contractors or subcontractors providing homecare services, the supplemental benefit rate may be waived by the terms of a bona fide collective bargaining agreement with respect to employees who have never worked a minimum of eighty (80) hours per month for two consecutive months for that covered employer, but such provision may not be waived for any employee once a minimum of eighty (80) hours for two consecutive months has been achieved.

Effective Period: 7/1/2012 - 6/30/2013
Wage Rate per Hour: $10.00
Supplemental Benefit Rate per Hour: $1.50

(NYC Administrative Code §6-109)

SECURITY GUARD (ARMED)

Security Guard (Armed)

Effective Period: 7/1/2012 - 12/31/2012
Wage Rate per Hour: $27.75
Supplemental Benefit Rate per Hour: $4.73
Supplemental Note: for new employee 0-30 days of employment - $4.09; for new employee 31-120 days of employment - $4.26; for new employee 121 days - 2 years of employment - $4.37

Effective Period: 1/1/2013 - 6/30/2013
Wage Rate per Hour: $28.00
Supplemental Benefit Rate per Hour: $4.90
Supplemental Note: for new employee 0-30 days of employment - $4.26; for new employee 31-120 days of employment - $4.43; for new employee 121 days - 2 years of employment - $4.54

Months of employment shall be defined as an Employee's length of service with the Employer or at the Facility, whichever is greater.

Overtime Description

A guard who works a holiday is paid the regular rate plus receives the paid holiday.
Supplemental Benefits shall be paid for each hour paid, up to forty (40) paid hours per week.

Overtime

Time and one half the regular rate after an 8 hour day.
Time and one half the regular hourly rate after 40 hours in any work week.

Paid Holidays

New Year's Day
President's Day
Memorial Day
Independence Day
Labor Day
Thanksgiving Day
Christmas Day

Vacation

Months on payroll	Vacation with Pay
6	3 days
12	5 days
24	10 days
60	15 days
180	20 days
300	25 days

Sick Leave
Employees accrue paid sick leave at the rate of one (1) sick day for every six (6) months worked, up to a maximum of six (6) days a year.

(Local #32B/J)

SECURITY GUARD (UNARMED)

Security Guard (Unarmed) 0 - 6 months

Effective Period: 7/1/2012 - 12/31/2012
Wage Rate per Hour: $12.60
Supplemental Benefit Rate per Hour: $4.37
Supplemental Note: for new employee 0-30 days of employment - $4.09; for new employee 31-120 days of employment - $4.26

Effective Period: 1/1/2013 - 6/30/2013
Wage Rate per Hour: $12.85
Supplemental Benefit Rate per Hour: $4.54
Supplemental Note: for new employee 0-30 days of employment - $4.26; for new employee 31-120 days of employment - $4.43

Security Guard (Unarmed) 7 - 12 months

Effective Period: 7/1/2012 - 12/31/2012
Wage Rate per Hour: $13.10
Supplemental Benefit Rate per Hour: $4.37

Effective Period: 1/1/2013 - 6/30/2013
Wage Rate per Hour: $13.35
Supplemental Benefit Rate per Hour: $4.54

Security Guard (Unarmed) 13 - 18 months

Effective Period: 7/1/2012 - 12/31/2012
Wage Rate per Hour: $13.60
Supplemental Benefit Rate per Hour: $4.37

Effective Period: 1/1/2013 - 6/30/2013
Wage Rate per Hour: $13.85
Supplemental Benefit Rate per Hour: $4.54

Security Guard (Unarmed) 19 - 24 months

Effective Period: 7/1/2012 - 12/31/2012
Wage Rate per Hour: $14.10
Supplemental Benefit Rate per Hour: $4.37

Effective Period: 1/1/2013 - 6/30/2013
Wage Rate per Hour: $14.35
Supplemental Benefit Rate per Hour: $4.54

Security Guard (Unarmed) 25 - 30 months

Effective Period: 7/1/2012 - 12/31/2012
Wage Rate per Hour: $14.60
Supplemental Benefit Rate per Hour: $4.73

Effective Period: 1/1/2013 - 6/30/2013
Wage Rate per Hour: $14.85
Supplemental Benefit Rate per Hour: $4.90

Security Guard (Unarmed) 31 months or more

Effective Period: 7/1/2012 - 12/31/2012
Wage Rate per Hour: $14.75
Supplemental Benefit Rate per Hour: $4.73

Effective Period: 1/1/2013 - 6/30/2013
Wage Rate per Hour: $15.15
Supplemental Benefit Rate per Hour: $4.90

Months of employment shall be defined as an Employee's length of service with the Employer or at the Facility, whichever is greater.

Overtime Description

A guard who works a holiday is paid the regular rate plus receives the paid holiday.
Supplemental Benefits shall be paid for each hour paid, up to forty (40) paid hours per week.

Overtime

Time and one half the regular rate after an 8 hour day.
Time and one half the regular hourly rate after 40 hours in any work week.

Paid Holidays

New Year's Day
President's Day
Memorial Day
Independence Day
Labor Day
Thanksgiving Day
Christmas Day

Vacation

Months on payroll	Vacation with Pay
6	3 days
12	5 days
24	10 days
60	15 days
180	20 days
300	25 days

Sick Leave
Employees accrue paid sick leave at the rate of one (1) sick day for every six (6) months worked, up to a maximum of six (6) days a year.

(Local #32B/J)

SERVICES TO PERSONS WITH CEREBRAL PALSY

Services To Person With Cerebral Palsy

'Services to Persons with Cerebral Palsy' means provision of services which enable persons with cerebral palsy and related disabilities to lead independent and productive lives through an agency that provides health care, education, employment, housing and technology resources to such persons under contract with the city or the department of education.

Effective Period: 7/1/2012 - 6/30/2013
Wage Rate per Hour: $10.00
Supplemental Benefit Rate per Hour: $1.50

(NYC Administrative Code §6-109)

TEMPORARY OFFICE SERVICES

Administrative Assistant

Effective Period: 7/1/2012 - 6/30/2013
Wage Rate per Hour: $31.02
Supplemental Benefit Rate per Hour: None

Cashier

Effective Period: 7/1/2012 - 6/30/2013
Wage Rate per Hour: $11.50
Supplemental Benefit Rate per Hour: None

Clerk (various)

Effective Period: 7/1/2012 - 6/30/2013
Wage Rate per Hour: $14.60
Supplemental Benefit Rate per Hour: None

Computer Assistant

Effective Period: 7/1/2012 - 6/30/2013
Wage Rate per Hour: $20.61
Supplemental Benefit Rate per Hour: None

Data Entry Operator

Effective Period: 7/1/2012 - 6/30/2013
Wage Rate per Hour: $15.73
Supplemental Benefit Rate per Hour: None

Receptionist

Effective Period: 7/1/2012 - 6/30/2013
Wage Rate per Hour: $14.71
Supplemental Benefit Rate per Hour: None

Secretary (various)

Effective Period: 7/1/2012 - 6/30/2013
Wage Rate per Hour: $18.72
Supplemental Benefit Rate per Hour: None

Word Processor

Effective Period: 7/1/2012 - 6/30/2013
Wage Rate per Hour: $19.50
Supplemental Benefit Rate per Hour: None

Overtime

Time and one half the regular rate after a 40 hour week.

(Based on data from NYS Department of Labor Occupational Employment Statistics and US Department of Labor Bureau of Labor Statistics or NYC Administrative Code §6-109)

WINDOW CLEANER

Window Cleaner

Effective Period: 7/1/2012 - 12/31/2012
Wage Rate per Hour: $26.12
Supplemental Benefit Rate per Hour: $9.13

Effective Period: 1/1/2013 - 6/30/2013
Wage Rate per Hour: $26.44
Supplemental Benefit Rate per Hour: $9.51

Power Operated Scaffolds, Manual Scaffolds, and Boatswain Chairs

Effective Period: 7/1/2012 - 12/31/2012
Wage Rate per Hour: $28.37
Supplemental Benefit Rate per Hour: $9.13

Effective Period: 1/1/2013 - 6/30/2013
Wage Rate per Hour: $28.69
Supplemental Benefit Rate per Hour: $9.51

Window Cleaner Apprentice (0 - 3 months)

Employee must be a registered apprentice with the New York State Department of Labor

Effective Period: 7/1/2012 - 12/31/2012
Wage Rate per Hour: $19.35
Supplemental Benefit Rate per Hour: $0.00

Effective Period: 1/1/2013 - 6/30/2013
Wage Rate per Hour: $19.59
Supplemental Benefit Rate per Hour: $0.00

Window Cleaner Apprentice (4 - 7 months)

Employee must be a registered apprentice with the New York State Department of Labor

Effective Period: 7/1/2012 - 12/31/2012
Wage Rate per Hour: $20.92

Supplemental Benefit Rate per Hour: $9.13

Effective Period: 1/1/2013 - 6/30/2013
Wage Rate per Hour: $21.18
Supplemental Benefit Rate per Hour: $9.51

Window Cleaner Apprentice (8 - 11 months)

Employee must be a registered apprentice with the New York State Department of Labor

Effective Period: 7/1/2012 - 12/31/2012
Wage Rate per Hour: $22.17
Supplemental Benefit Rate per Hour: $9.13

Effective Period: 1/1/2013 - 6/30/2013
Wage Rate per Hour: $22.44
Supplemental Benefit Rate per Hour: $9.51

Window Cleaner Apprentice (12 - 15 months)

Employee must be a registered apprentice with the New York State Department of Labor

Effective Period: 7/1/2012 - 12/31/2012
Wage Rate per Hour: $23.43
Supplemental Benefit Rate per Hour: $9.13

Effective Period: 1/1/2013 - 6/30/2013
Wage Rate per Hour: $23.72
Supplemental Benefit Rate per Hour: $9.51

Window Cleaner Apprentice (16 - 17 months)

Employee must be a registered apprentice with the New York State Department of Labor

Effective Period: 7/1/2012 - 12/31/2012
Wage Rate per Hour: $24.70
Supplemental Benefit Rate per Hour: $9.13

Effective Period: 1/1/2013 - 6/30/2013
Wage Rate per Hour: $25.01
Supplemental Benefit Rate per Hour: $9.51

Overtime

Time and one half the regular rate after an 8 hour day.
Time and one half the regular rate for Saturday.
Double time the regular rate for Sunday.
Time and one half the regular rate for work on a holiday plus the day's pay.

Paid Holidays

New Year's Day
Martin Luther King Jr. Day
President's Birthday
Good Friday
Memorial Day
Independence Day
Labor Day
Columbus Day
Thanksgiving Day
Day after Thanksgiving
Christmas Day
Personal Day

Vacation

After 7 months but less than 1 year of service.....5 days
1 year but less than 5 years of service.....10 days
5 years of service but less than 15 years of service.....15 days
15 years of service but less than 21 years of service.....20 days
21 years.....21 days
22 years.....22 days
23 years.....23 days
24 years.....24 days
25 years or more of service.....25 days
Plus 1 day per year for medical visit

SICK LEAVE:
10 days after one year worked. Unused sick days to be paid in cash.

(Local #32 B/J)

(NO TEXT ON THIS PAGE)

Leonard A. Mancusi
SENIOR ASSISTANT COMPTROLLER

THE CITY OF NEW YORK
OFFICE OF THE COMPTROLLER
1 CENTRE STREET ROOM 1120
NEW YORK, N.Y. 10007-2341

ALAN G. HEVESI
COMPTROLLER

TELEPHONE: (212) 669-3622
FAX NUMBER: (212) 669-8499

MEMORANDUM

November 6, 2000

To *Agency Chief Contracting Officers*

From: *Leonard A. Mancusi*

Re: *Security at Construction Sites*

Prior to the enactment of Administrative Code §6-109, security guards on construction sites were not subject to prevailing wages. Security guards under the New York State labor law are covered under §230 which provides that prevailing wages are to be paid for security guards in existing buildings. §6-109 of the Administrative Code which was enacted in 1996 closed this loophole by including all security guards working pursuant to a city contract as a prevailing wage trade.

Although some construction contract boilerplate language has been amended to include §6-109, sub-contractors performing security services have advised us that they were not aware of this provision and, since traditionally, security guards were not a covered trade on construction sites, and they were not advised by a prime contractor that they would have to pay prevailing wages, they have not been doing so.

To avoid the possibility of issuing stop payments against prime contractors for the failure of their security service sub-contractors to pay

prevailing wages, we suggest that you write to all your existing security guard sub-contractors and their primes and in the future, upon approval of a security guard sub-contractor, advise the contractors of their obligation to pay prevailing wages under §6-109 of the Administrative Code.

As always, your cooperation is appreciated.

LAM:er
ACCO.SECURITY AT SITES

NEW YORK CITY DEPARTMENT OF
DESIGN + CONSTRUCTION

INFRASTRUCTURE DIVISION
BUREAU OF DESIGN

VOLUME 2 OF 3

_____

Contractor

_____

Dated_____, **20**___

_____

APPROVED AS TO FORM
CERTIFIED AS TO LEGAL AUTHORITY

_____

Acting Corporation Counsel

_____

Dated_____, **20**___

_____

NEW YORK CITY DEPARTMENT OF
DESIGN + CONSTRUCTION

INFRASTRUCTURE DIVISION
BUREAU OF DESIGN

VOLUME 2 OF 3

PROJECT ID: QED1008

FOR THE INSTALLATION OF 60-INCH AND 12-INCH WATER MAINS IN: 54TH STREET BETWEEN FLUSHING AVENUE AND GRAND AVENUE

Together With All Work Incidental Thereto
BOROUGH OF QUEENS
CITY OF NEW YORK

Cruz Contractors LLC

Contractor

Dated_____, **20**___

APPROVED AS TO FORM
CERTIFIED AS TO LEGAL AUTHORITY

Acting Corporation Counsel

JP
4.3.12

Dated April 3, **20** 13

NEW YORK CITY DEPARTMENT OF
DESIGN + CONSTRUCTION

THE CITY OF NEW YORK
DEPARTMENT OF DESIGN AND CONSTRUCTION
DIVISION OF INFRASTRUCTURE

30-30 THOMSON AVENUE
LONG ISLAND CITY, NEW YORK 11101-3045
TELEPHONE (718) 391-1000
WEBSITE www.nyc.gov/buildnyc

VOLUME 3 OF 3

SCHEDULE A
ADDENDA NOS. 1 TO 4

FOR FURNISHING ALL LABOR AND MATERIALS NECESSARY AND REQUIRED FOR:

PROJECT ID: QED1008

FOR THE INSTALLATION OF 60-INCH AND 12-INCH WATER MAINS IN:
54TH STREET BETWEEN FLUSHING AVENUE AND GRAND AVENUE

Together With All Work Incidental Thereto
BOROUGH OF QUEENS
CITY OF NEW YORK

FOR THE DEPARTMENT OF ENVIRONMENTAL PROTECTION
PREPARED BY
IN-HOUSE DESIGN

February 25, 2013

W3-029

SPECIFICATIONS AND STANDARDS OF NEW YORK CITY

The following NYC Department of Transportation reference documents are available on-line at:
http://www.nyc.gov/html/ddc/html/pubs/pubs_infrastdts.shtml or for purchase between 9:00 A.M. and 3:00 P.M. at 55 Water St., Ground Floor, NYC, N.Y. 10041. Contact: Ms Vivian Cruz, Tel. (212) 839-9434

1. New York City Standard Highway Specifications, November 1, 2010.
2. New York City Standard Highway Details of Construction, July 1, 2010.
3. New York City Division of Street Lighting Specifications.
4. New York City Division of Street Lighting Standard Drawings.
5. New York City Standard Specifications for Traffic Signals.
6. New York City Standard Drawings for Traffic Signals.

The following reference documents for Sewer Work are available on-line at:
http://www.nyc.gov/html/ddc/html/pubs/pubs_infrastdts.shtml or for pick up between 8:00 A.M. and 4:00 P.M. at 30-30 Thomson Avenue, 3rd Floor, Division of Infrastructure, Long Island City, N.Y. 11101.
Contact: Mr. William Patalano, Tel. (718) 391-2054

1. New York City DEP Standard Sewer Specifications, August 1, 2009.
2. New York City DEP Instructions for Concrete Specifications, Jan. 92.
3. New York City DEP General Specification 11-Concrete, November 1991.
4. New York City DEP Sewer Design Standards, (September 2007) Revised January 2009

The following reference documents for Water Mains Work are available on-line at: http://www.nyc.gov/html/ddc/html/pubs/pubs_infrastdts.shtml or for pick up between 8:00 A.M. and 4:00 P.M. at 30-30 Thomson Avenue, 3rd Floor, Division of Infrastructure, Long Island City, N.Y. 11101.
Contact: Mr. Robert Kuhlmann, Tel. (718) 391-2145

1. New York City Department of Environmental Protection, Standard Water Main Specifications, dated August 1, 2009.
2. New York City Department of Environmental Protection Water Main Standard Drawings.
3. Specifications for Trunk Main Work, dated February 2010.

The water main work material specifications are available at the Department of Environmental Protection, 59-17 Junction Boulevard, 3rd Floor Low-Rise Building, Flushing, N.Y. 11373-5108.
Contact: Mr. Tarlock Sahansra, P.E., Tel. (718) 595-5302
E-mail: TSAHANSRA@DEP.NYC.GOV

Standard Specifications and Drawings for Fire Department Communications facilities of New York City are available at 87 Union Street, Engineering Office, Brooklyn, NY 11231-1416.
Contact: Mr. Ed Durkin, Tel. (718) 624-3752

Tree Planting Standards of the City of New York Parks & Recreation are available at the following Department of Parks & Recreation website:
http://www.nycgovparks.org/sub_permits_and_applications/images_and_pdfs/TreePlantingStandards.pdf

SPECIFICATIONS AND STANDARDS OF PRIVATE UTILITIES

The Following reference documents for Private Utility Work are available for pick up between 8:30 A.M. and 4:00 P.M. at 30-30 Thomson Avenue, First Floor Bid Procurement Room, L.I.C., N.Y. 11101.

1. JOINT-BIDDING SPECIFICATIONS AND SKETCHES FOR MANHATTAN Issued: August 1, 2005
2. CET SPECIFICATIONS AND SKETCHES Issued: November 2010

(NO TEXT ON THIS PAGE)

SCHEDULE "A"

(GENERAL CONDITIONS TO CONSTRUCTION CONTRACT)

(GENERAL CONDITIONS OTHER THAN ARTICLE 22)

REFERENCE	ITEM	REQUIREMENTS
Section 26 Information For Bidders	Bid Security	See Attachment 1 (page A-1 of the Bid Booklet)
	Performance Security Payment Security	See Attachment 1 (page A-1 of the Bid Booklet)
Article 14 Contract	Date for Substantial Completion	See Page SA-2
Article 15 Contract	Liquidated Damages	For Each Consecutive Calendar Day Over Completion Time: $500.00
Article 17 Contract	Subcontracts	Not to Exceed 40% of Contract Price
Article 24 Contract	Deposit as Guarantee	Percent of Contract Price 1%
	Maintenance Period	Eighteen (18) Months, excluding Trees Twenty-Four (24) Months for Tree Planting
Article 77 Contract	M/WBE Program	See Subcontract Utilization Plan in the Bid Booklet
Section 6.40 Standard Highway Specifications	Liquidated Damages For Engineer's Field Office	For Each Calendar Day of Deficiency $150.00
	If the Contractor fails to satisfactorily provide the field office and all equipment specified in **Section 6.40 - Engineer's Field Office**, and/or if a cited deficiency exceed seventy-two (72) hours after notice from the Engineer in writing, or is permitted to recur, liquidated damages will be assessed in the amount specified in Schedule "A" for each subsequent calendar day or part thereof that a cited deficiency resulting in nonpayment, as described in **Section 6.40.5**, is not corrected.	
Section 6.70 Standard Highway Specifications	Liquidated Damages For Maintenance And Protection Of Traffic	For each instance of failure to comply with the Maintenance and Protection of Traffic requirements within three (3) hours after written notice from the Engineer: $250.00 For each and every hour of failing to open the entire width of roadway to traffic the morning following a night/weekend work operation: $500.00
Section 7.13 Standard Highway Specifications	Liquidated Damages For Maintenance Of Site	For Each Calendar Day, For Each Occurrence $250.00
	If the Contractor fails to comply, within three (3) consecutive hours after written notice from the Engineer, with the requirements of **Section 7.13 - Maintenance Of Site**, the Contractor shall pay to the City of New York, until such notice has been complied with or rescinded, the sum specified above per calendar day, for each instance of such failure, as liquidated damages and not as a penalty, for such default.	

SCHEDULE "A"

(GENERAL CONDITIONS TO CONSTRUCTION CONTRACT)

(GENERAL CONDITIONS OTHER THAN ARTICLE 22)

(Continued)

Date for Substantial Completion (Reference: Article 14)

The Contractor shall substantially complete the Work within the Final Contract Duration determined in accordance with the terms and conditions set forth herein.

The Base Contract Duration for this project is ___180___ consecutive calendar days ("ccds").

The Final Contract Duration shall be the Base Contract Duration when a check mark is indicated before the word "NO", below, and shall be the Base Contract Duration adjusted by the table set forth below when a check mark is indicated before the word "YES", below.

___√___ YES _____ NO

When the Final Contract Duration is indicated above to be adjusted by the table below, the table may increase the Base Contract Duration depending on the date of scheduled substantial completion to avoid a scheduled substantial completion of the Work during the winter months. The date of the scheduled substantial completion shall be determined by adding the Base Contract Duration to the date specified to commence work in the written Notice To Proceed. The Final Contract Duration shall then be determined as follows:

(a) Find the row that corresponds to the month of the substantial completion based on the Base Contract Duration added to the date specified to commence work in the written Notice To Proceed.
(b) Find the number of days to be added to the Base Contract Duration in the table below. Add that number of days to the Base Contract Duration to obtain the Final Contract Duration in consecutive calendar days.

Month Of Substantial Completion Based On The Base Contract Duration	Number Of Days Of Adjustment
January	150
February	120
March	90
April	60
May	30
June	0
July	0
August	0
September	0
October	0
November - December 15	0
December 16 - December 31	180

In addition, should Item No. 9.30 - STORM WATER POLLUTION PREVENTION exist in the Contract and the required Storm Water Pollution Prevention Plan (SWPPP) does not conform to NYSDEC's recommended Standards, an additional 60-ccds shall be added to the above Final Contract Duration.

SCHEDULE "A"
(GENERAL CONDITIONS TO CONSTRUCTION CONTRACT)
(GENERAL CONDITIONS RELATING TO ARTICLE 22 - INSURANCE)

PART I. MINIMUM LIMITS AND SPECIAL CONDITIONS

Insurance indicated by a blackened box (■) or by an X in a box (☒) to left will be required under this contract.

TYPES OF INSURANCE (per Article 22 in its entirety, including listed paragraph)		MINIMUM LIMITS AND SPECIAL CONDITIONS
■ Commercial General Liability	Art. 22.1.1	$3,000,000 per Occurrence $6,000,000 Aggregate (applicable separately to this **Project**) Additional Insureds: (1) City of New York, including its officials and employees. (2) The Long Island Railroad (LIRR), Metropolitan Transportation Authority (MTA), its subsidiaries and affiliated companies. The Contractor shall furnish two (2) certificates of insurance (see pages SA-10 and SA-11) or authority for self-insurance to the LIRR, Attention: MTA Risk and Insurance Management, Long Island Rail Road, 2 Broadway, New York, New York 10004. (3) National Grid
■ Workers' Compensation ■ Disability Benefits Insurance ■ Employers' Liability ☐ Jones Act ☐ U.S. Longshoremen's and Harbor Workers Compensation Act	Art. 22.1.2 Art. 22.1.2 Art. 22.1.3 Art. 22.1.4 Art. 22.1.4	Workers' Compensation: Statutory per New York State law without regard to jurisdiction. Disability Benefits Insurance: Statutory per New York State law without regard to jurisdiction. Employers' Liability: $2,000,000 each Accident ■ Additional Requirements: (1) Two (2) certificates of such insurance (see pages SA-10 and SA-11) or authority for self-insurance shall be furnished to the LIRR, Attention: MTA Risk and Insurance Management, Long Island Rail Road, 2 Broadway, New York, New York 10004. (2)

SCHEDULE "A"

(GENERAL CONDITIONS TO CONSTRUCTION CONTRACT)

(GENERAL CONDITIONS RELATING TO ARTICLE 22 - INSURANCE)

PART I (Continued)

Insurance indicated by a blackened box (■) or by an X in a box (☒) to left will be required under this contract.

TYPES OF INSURANCE (per Article 22 in its entirety, including listed paragraph)	MINIMUM LIMITS AND SPECIAL CONDITIONS
☐ Builders' Risk Art. 22.1.5	___% of Total Value of **Work** City of New York and the **Contractor** named as Loss Payee for the **Work** in order of precedence, as their interests may appear.
■ Comprehensive Business Auto Coverage Art. 22.1.6	$2,000,000 per Accident If vehicles are used for transporting hazardous materials, the **Contractor** shall provide pollution liability broadened coverage for covered autos (endorsement CA 99 48) as well as proof of MCS 90. Additional Insureds: (1) City of New York, including its officials and employees. (2) The Long Island Railroad (LIRR), Metropolitan Transportation Authority (MTA), its subsidiaries and affiliated companies. (3)
☐ Pollution/Environmental Liability Art. 22.1.7	$_____ per Occurrence $_____ Aggregate Additional Insureds: (1) City of New York, including its officials and employees. (2)

SCHEDULE "A"

(GENERAL CONDITIONS TO CONSTRUCTION CONTRACT)

(GENERAL CONDITIONS RELATING TO ARTICLE 22 - INSURANCE)

PART I (Continued)

Insurance indicated by a blackened box (■) or by an X in a box (☒) to left will be required under this contract.

TYPES OF INSURANCE (per Article 22 in its entirety, including listed paragraph)	MINIMUM LIMITS AND SPECIAL CONDITIONS
☐ Marine Protection and Indemnity Art. 22.1.8(a)	$_____ per Occurrence $_____ Aggregate Additional Insureds: (1) City of New York, including its officials and employees. (2)
☐ Ship Repairers Legal Liability Art. 22.1.8(b)	$_____ each Occurrence [Contracting agency to fill in total value of City vessels involved]
☐ Collision Liability/Towers Liability Art. 22.1.8(c)	$_____ per Occurrence $_____ Aggregate Additional Insureds: (1) City of New York, including its officials and employees. (2)
☐ Marine Pollution Liability Art. 22.1.8(d)	$_____ each Occurrence Additional Insureds: (1) City of New York, including its officials and employees. (2)

SCHEDULE "A"

(GENERAL CONDITIONS TO CONSTRUCTION CONTRACT)

(GENERAL CONDITIONS RELATING TO ARTICLE 22 - INSURANCE)

PART I (Continued)

Insurance indicated by a blackened box (■) or by an X in a box (☒) to left will be required under this contract.

TYPES OF INSURANCE (per Article 22 in its entirety, including listed paragraph)	MINIMUM LIMITS AND SPECIAL CONDITIONS
[OTHER] Art. 22.1.9	
■ Railroad Protection Liability Policy	$2,000,000 per Occurrence
(ISO-RIMA or equivalent form) approved by Permittor covering the work to be performed at the designated site and affording protection for damages arising out of bodily injury or death, physical damage to or destruction of property, including damage to the Insured's own property and conforming to the following.	$6,000,000 Aggregate Named Insureds: (1) The Long Island Railroad (LIRR) Metropolitan Transportation Authority (MTA), its subsidiaries and affiliated companies, the City of New York and all other indemnified parties.
• Policy Endorsement CG 28 31 - Pollution Exclusion Amendment is required to be endorsed onto the policy when environmental-related work and/or exposures exist.	(2)
• Indicate the Name and address of the Contractor to perform the work, the Contract No. and the name of the railroad property where the work is being performed and the Agency Permit.	
• Evidence of Railroad Protection Liability Insurance, must be provided in the form of the Original Policy. A detailed Insurance Binder (ACORD or Manuscript Form) will be accepted pending issuance of the Original Policy, which must be provided within thirty (30) days of the Binder Approval.	

SCHEDULE "A"

(GENERAL CONDITIONS TO CONSTRUCTION CONTRACT)

(GENERAL CONDITIONS RELATING TO ARTICLE 22 - INSURANCE)

PART I (Continued)

Insurance indicated by a blackened box (■) or by an X in a box (☒) to left will be required under this contract.

[OTHER] Art. 22.1.9 ■ Professional Liability (A) The Contractor's Professional Engineer shall maintain and submit evidence of Professional Liability Insurance in the minimum amount of $1,000,000 per Claim. The policy or policies shall include an endorsement to cover the liability assumed by the Contractor under this Contract arising out of the negligent performance of professional services or caused by an error, omission or negligent act of the Contractor's Professional Engineer or anyone employed by the Contractor's Professional Engineer. (B) Claims-made policies will be accepted for Professional Liability Insurance. All such policies shall have an extended reporting period option or automatic coverage of not less than two (2) years. If available as an option, the Contractor's Professional Engineer shall purchase extended reporting period coverage effective on cancellation or termination of such insurance unless a new policy is secured with a retroactive date, including at least the last policy year.	
[OTHER] Art. 22.1.9 ■ Engineer's Field Office **Section 6.40, Standard Highway Specifications**	Fire insurance, extended coverage and vandalism, malicious mischief and burglary, and theft insurance coverage in the amount of $40,000.
[OTHER] Art. 22.1.9 ☐ The Following Additional Insurance Must Be Provided: **Umbrella/Excess Liability Insurance** - The Contractor shall provide Umbrella/Excess Liability Insurance in the minimum amount of $10,000,000 per Occurrence and $10,000,000 in Aggregate. The policy terms and condition should be at least as broad as the underlying policies. The underlying policies should comply with the insurance provision as outlined by the contract. Defense cost should be in addition to the limit of liability. The City of New York, including its officials and employees, should be included as additional insured as respects to the noted project.	

SCHEDULE "A"
(GENERAL CONDITIONS TO CONSTRUCTION CONTRACT)
(GENERAL CONDITIONS RELATING TO ARTICLE 22 - INSURANCE)

PART II. BROKER'S CERTIFICATION

[Pursuant to Article 22.3.1(a) of the **Contract**, every Certificate Of Insurance must be accompanied by either the following certification by the broker setting forth the following text and required information and signatures or complete copies of all policies referenced in the Certificate Of Insurance. In the absence of completed policies, binders are acceptable.]

CERTIFICATION BY BROKER

The undersigned insurance broker represents to the City of New York that the attached Certificate Of Insurance is accurate in all material respects, and that the described insurance is effective as of the date of this Certification.

_____
[Name Of Broker (Typewritten)]

_____
[Address Of Broker (Typewritten)]

_____
[Signature Of Authorized Official Or Broker]

_____
[Name And Title Of Authorized Official (Typewritten)]

Sworn to before me this

_____ day of _____, 200___

_____
NOTARY PUBLIC

SCHEDULE "A"
(GENERAL CONDITIONS TO CONSTRUCTION CONTRACT)
(GENERAL CONDITIONS RELATING TO ARTICLE 22 - INSURANCE)

PART III. ADDRESS OF COMMISSIONER

Wherever reference is made in Article 7 or Article 22 to documents to be sent to the **Commissioner** (e.g., notices, filings, or submissions), such documents shall be sent to the address set forth below or, in the absence of such address, to the **Commissioner's** address as provided elsewhere in this **Contract**.

DDC Director, Insurance Risk Manager

30 - 30 Thomson Avenue, 4th Floor (IDCNY Building)

Long Island City, NY 11101

☐ CAPITAL CONTRACT

☐ OPERATING CONTRACT

☐ "NOT FOR BENEFIT", Including ENTRY PERMITS/FILM

Long Island Rail Road
CERTIFICATE OF INSURANCE

AGREEMENT or CONTRACT NO.:	AGREEMENT or CONTRACT Name/Description:

PRODUCER: ADDRESS: PHONE NUMBER:	CERTIFICATE ISSUANCE DATE:	RECEIVED BY MTA RIM: MTA REFERENCE NO.:

INSURED: ADDRESS: PHONE NUMBER:	CO LTR	COMPANIES AFFORDING COVERAGE
	A	
	B	
	C	
CERTIFICATE HOLDER: Long Island Rail Road/MTA Attn: Risk & Insurance Management ADDRESS: 2 Broadway 21st Floor New York, NY 10004	D	
	E	
	F	
	G	

CO LTR	TYPE OF INSURANCE	POLICY NUMBER	EFFECTIVE DATE	EXPIRATION DATE	LIMITS	
	GENERAL LIABILITY ☐ Comprehensive Form ☐ Underground Expl. & Collapse Hazard ☐ Products/Completed Operation ☐ Contractual ☐ Independent Contractors ☐ Broad Form Property Damage ☐ Personal Injury ☐ Deductible $				BODILY INJURY OCCURENCE	$
					BODILY INJURY AGGREGATE	$
					PROPERTY DAMAGE OCC.	$
					B.I. & P.D. COMBINED OCC.	$
					B.I. & P.D. COMBINED AGG.	$
					PERSONAL INJURY AGG.	$
	AUTOMOBILE LIABILITY ☐ Any Auto ☐ Owned Autos ☐ Hired Autos ☐ Non-Owned Autos				BODILY INJURY (Per Person)	$
					BODILY INJURY (Per Accident)	$
					PROPERTY DAMAGE	$
					BODILY INJURY & PROPERTY DAMAGE COMBINED	$
	GARAGE LIABILITY ☐ ANY AUTO				AUTO ONLY - EACH ACCIDENT	$
					OTHER THAN EACH ACC.	$
					AUTO ONLY: AGGREGATE	$
	EXCESS LIABILITY ☐ Umbrella Form ☐ Other Than Umbrella Form				EACH OCCURRENCE	$
					AGGREGATE	$
	WORKER'S COMPENSATION AND EMPLOYER'S LIABILITY (Check if applicable) ☐ "All States" Coverage				☐ STATUTORY LIMITS	
					EMPLOYER'S LIABILITY	$
	BUILDER'S RISK				FULL CONTRACT VALUE OF	$
	PROFESSIONAL LIABILITY ☐ Deductible $ _____ ☐ Includes Pollution Liability					$
	OTHER					$
	OTHER					$

RAILROAD PROTECTIVE LIABILITY Insurance is NOT ACCEPTED on Certificate of Insurance forms - Provide detailed BINDER and/or POLICY.

CERTIFICATE OF INSURANCE **(Continued) Page 2**

ADDITIONAL INSUREDS (See Note 3) (√ all that apply):
Coverage: Commercial Liability, Garage Liability, Excess/Umbrella Liability, Contractor's Pollution Liability Pollution Legal Liability, etc.

For LIRR Agreements:

- ☐ Long Island Rail Road (LIRR), Metropolitan Transportation Authority (MTA) and it's subsidiaries and affiliates
- ☐ New York & Atlantic Railway Company
- ☐ National Railroad Passenger Corp. (Amtrak)
- ☐ NJ Transit Rail Operations, Inc.
- ☐ The Port Authority of NY and NJ
- ☐ Other

☐ LOSS PAYEES (See Note 3) (√ all that apply):
Coverage: Crime Insurance, Valuable Papers Builder's Risk, etc.

☐ NAMED INSUREDS (See Note 4) (√ all that apply):
Coverage: Property, etc.

For LIRR Agreements:

- ☐ Long Island Rail Road (LIRR), Metropolitan Transportation Authority (MTA) and it's subsidiaries and affiliates
- ☐ New York & Atlantic Railway Company
- ☐ National Railroad Passenger Corp. (Amtrak)
- ☐ NJ Transit Rail Operations, Inc.
- ☐ The Port Authority of NY and NJ
- ☐ Other

NOTE 1: The subscribing insurance company(s), authorized to do business in the State of New York, certifies that insurance of the kinds and types and for Limits of Liability herein stated, covering the Agreement/Contract herein designated, has been procured by and furnished on behalf of the insured and is in full force and effect for the period listed on the front of this Certificate of Insurance. In addition, the subscribing insurance company(s) certifies that the insurance limits for General Liability Insurance are not amended by deductible clauses of any nature except as has been disclosed to and approved by the Long Island Rail Road; and that coverage is afforded for the insured's obligations under that provision of the Agreement/Contract providing for indemnification of the Indemnified Parties, including the Long Island Rail Road, named therein. Further, any Umbrella/Excess Policy used to meet minimum contract requirements follows form of the underlying policy and will "drop down" to become primary in the event the Contractor's underlying policy is exhausted. Any exclusion applying to construction or demolition operations on or within fifty (50) feet of railroad property (stations, yards, tracks, etc.) has been voided. Any employer liability exclusion, which may otherwise operate to exclude claims for bodily injury asserted by an employee of an additional insured, shall be voided.

NOTE 2: The subscribing company(s), shall endeavor to provide thirty (30) days written notice of any material changes or cancellation to Long Island Rail Road c/o MTA Risk and Insurance Management Dept., 2 Broadway, 21st Floor, New York, NY 10004.

NOTE 3: All references to Additional Insureds, Named Insureds and Loss Payees include those entities' directors, officers, employees, partners, agents, subsidiaries and affiliates.

NOTE 4: This certificate is issued to the Certificate Holder in consideration of the Agreement/Contract entered into with the named Insured. It is understood and agreed that the Certificate Holder relies on the certificate as a basis for continuing such Agreement/Contracts with the named Insured.

AUTHORIZED INSURER/PRODUCER _____

BY _____
(signature of authorized Insurer/Producer)

TITLE _____

STATE OF)
) s.s.
COUNTY OF)

On this _____ day of _____ 20_____, before me personally came _____, to me known, who being duly sworn, did depose and say that he/she resides in _____, that he/she is the _____ of the corporation and described in and which executed the foregoing Certificate of Insurance, that he/she is fully authorized to execute the foregoing Certificate of Insurance.

_____
(Notary Public)

CERTIFICATES OF INSURANCE must be completed by AUTHORIZED INSURANCE REPRESENTATIVES ONLY.

NO TEXT THIS PAGE

ATTACH TO CONTRACT DOCUMENTS

THE CITY OF NEW YORK
DEPARTMENT OF DESIGN AND CONSTRUCTION
INFRASTRUCTURE DIVISION
BUREAU OF DESIGN

PROJECT ID: QED1008

FOR THE INSTALLATION OF 60-INCH AND 12-INCH WATER MAINS IN: 54TH STREET BETWEEN FLUSHING AVENUE AND GRAND AVENUE

Together With All Work Incidental Thereto
BOROUGH OF QUEENS
CITY OF NEW YORK

ADDENDUM NO. 1

DATED: November 26, 2012

THIS ADDENDUM IS HEREBY MADE A PART OF THE CONTRACT DOCUMENTS

The New York City Department of Transportation Standard Highway Specifications, dated November 1, 2010, (which include, but are not limited to, "General Conditions", "Basic Materials of Construction", "Combined Materials of Construction", "Construction Methods", "Inspection and Testing of Materials, Adjustments for Deficiencies, and Maintenance", and "Supplemental Construction Methods"), as modified by addenda issued prior to the opening of bids, shall apply to and become a part of the contract.

All references contained herein are to the New York City Department of Transportation, Standard Highway Specifications, dated November 1, 2010. The said Specifications are hereby revised. Included hereunder are the following REVISIONS:

1. Amendments to Standard Highway Specifications, Volume I
2. Amendments to Standard Highway Specifications, Volume II including Section 7.88 (Revised)

1. AMENDMENTS TO STANDARD HIGHWAY SPECIFICATIONS, VOLUME I

The following amendments to the Contract Requirements shall become a part of and apply to the contract:

[Added 12-09-2010]

1. Refer to Page 15, **Subsection 1.06.23.(C) CONFORMANCE WITH FEDERAL, STATE AND CITY AGENCIES;**
   Add the following new paragraphs:

"The Contractor is notified that all vehicles that are owned, leased or operated by the Contractor or its subcontractors and used in connection with the Project shall comply with the following requirement:

Every truck, tractor, and tractor-trailer or semitrailer combination, having a gross vehicle weight rating of twenty-six thousand pounds or more, and a conventional cab configuration in which more than half of the engine length is forward of the foremost point of the windshield base, and the steering wheel hub is in the forward quarter of the vehicle length shall be equipped with a convex mirror on the front of such vehicle or combination of vehicles. Such convex mirror shall be adjusted so as to enable the operator of such vehicle or combination of vehicles to see all points on an imaginary horizontal line which is three feet above the road, is one foot directly forward from the midpoint of the front of such vehicle or combination of vehicles, and extends the full width of the front of such vehicle or combination of vehicles.

Any vehicle that does not comply with this provision may be prohibited from entering the Project site and/or supplying equipment or materials to the Project. The Contractor shall not be entitled to any damages as a result of such prohibition."

[Added 01-09-2011]

2. Refer to Page 240, **Subsection 4.16.5.(B) STUMP REMOVAL;**
   Delete **Subsection 4.16.5.(B) STUMP REMOVAL**, in its entirety:
   Substitute the following revised **Subsection 4.16.5.(B)**:

"(B) STUMP REMOVAL

1. Tree stumps designated to be removed and their roots shall be completely excavated to a minimum depth of three (3) feet below the existing grade. A portable stump cutter may be required in some locations. It may be necessary to remove concrete, asphalt, pavers, and/or other types of material surrounding the base of the stump. All excess debris, including chips from tree stumps, shall be removed and disposed of by the Contractor, away from the site prior to backfilling and the area shall be restored by completion of the workday, to the satisfaction of the Engineer. The disposal of tree stumps by burning in open fires will not be permitted.

2. All voids and excavations left after the removal of the stump and roots shall be backfilled to grade with clean earth fill. Fill shall be placed and compacted to a minimum of 95 percent of Standard Proctor Maximum Density by acceptable methods to the satisfaction of the Engineer. Where paving blocks exist, they are to be reset to the existing grade as directed.

3. Maximum safety and care must be used by Contractor during stump removal. The Contractor shall carefully protect against damage all existing trees, plants, curbs, sidewalks and utilities and other features to remain. The Contractor is responsible for locating and protecting underground utilities from damage during stump removal procedures. During stump grinding operations, plywood must be used to protect adjacent vehicles, real property, and pedestrians. If, when removing stumps, existing sidewalks or curbs are disturbed, the Contractor shall restore and/or reset these sidewalks and curbs, at no additional cost to the City. Restoration work shall be done to match the existing, to the satisfaction of the Engineer. All damaged trees, curbs, sidewalks, real property, vehicles and utilities must be addressed within three (3) days."

[Added 04-18-2011]

3. Refer to Pages 218 and 219, **Subsection 4.13.4.(H) PIGMENT;**
Delete the first three (3) paragraphs on page 219:
Substitute the following revised three (3) paragraphs:

"Where the color of the concrete is required to simulate the color of dark gray bluestone, the concrete shall be integrally pigmented to produce a gray color equivalent to: Davis Colors No. 884-3%; Lansco Color No. 437 "Strong Black" 5 lbs. per 94 lbs. Light Grey Portland Cement and 3 parts sand; L.M. Scofield "Cool Black No. 4"; Bayferrox Limestone 330, 2 lbs. per 94 lbs. Light Gray Portland Cement; or an approved equivalent, unless otherwise specified.

Where the color of the concrete is required to simulate the color of light to medium gray granite, the concrete shall be integrally pigmented to produce a gray color equal to: Davis Colors No. 884-1%; Lansco Color No. 437 "Strong Black" 2.5 lbs. per 94 lbs. Light Grey Portland Cement and 3 parts sand; L.M. Scofield "Cool Black No. 1"; Bayferrox Silver 330, 1 lb. per 94 lbs. Light Gray Portland Cement; or an approved equivalent, unless otherwise specified.

Where the sidewalk is designated to have a saw cut joint finish the color of the concrete shall be integrally pigmented to produce a gray color equivalent to L.M. Scofield "Landmarks Grey" K-157-4; L.M. Scofield "Cool Black No. 4"; Davis Colors No. 884-3%; Lansco Color No. 437 "Strong Black" 5 lbs. per 94 lbs. Light Grey Portland Cement and 3 parts sand; Bayferrox NYC Landmark Commission Gray, 3.5 lbs. per 94 lbs. Light Gray Portland Cement; or an approved equivalent, unless otherwise specified."

[Added 07-01-2011]

4. Refer to Page 14, **Subsection 1.06.23.(A) PERMITS;**
Delete line (b) under the first paragraph;
Substitute the following text:

"(b) Any planned work requiring a DOT Construction Permit that may potentially be within 100 feet of a bridge structure will be placed on a Bridge Hold. If any proposed work is within 100 feet of a bridge structure, permittees must submit a scaled drawing showing the work and exact location, along with the following:

- Plan layout of the project area.
- The scope of work.
- The contractor's means and methods.
- Indicate if work will be done of the bridge itself or its abutments, and the type of work.

If the work is more than 100 feet away from the bridge structure, permittees may send a certification by e-mail stating so. Either response must be sent to the Division of Bridges at bridgeshold@dot.nyc.gov for review and release prior to commencing work. Emergency work will not be placed on hold and shall proceed in accordance with the New York City Highway Rules, section 2-11 (g);

(c) Permits from the Department of Sanitation for use of City landfills;"

[Added 07-27-2011]

5. Refer to Page 37, **Subsection 1.06.46.(A) 6. Sign Graphics;**
   Delete article "a." beginning with the words "All visual components of the sign are in an Adobe *.pdf file, . . ." and ending with the words ". . . DDC to the Contractor (on a CD or via E-mail) for printing.", in its entirety;
   Substitute the following revised article "a":

   "a. All visual components of the sign are in an Adobe *.pdf file, which is provided by the Commissioner's representative. The file is not to be altered for composition, type font or image from the version provided by DDC. The Commissioner's representative shall provide a complete file with data and image. The digital file shall be provided by DDC to the Contractor (on a CD or via E-mail) for printing."

[Added 09-27-2012]

6. Refer to Page 36, **Subsection 1.06.46. Project Sign;**
   Delete the words "Unless otherwise specified in the Special Provisions of the contract, the following shall apply:";
   Substitute the following revised text:

   "The Contractor is notified that he shall be required to furnish, install, maintain, and remove, when directed, Construction Project Information Signs (CPIS) as per Sec. 2-02(c)(4) and (5) of the NYC DOT Highway Rule and the cost shall be deemed included under all scheduled items of the contract. In addition, unless otherwise specified in the Special Provisions of the contract, the following Project Sign shall also apply:"

2. AMENDMENTS TO STANDARD HIGHWAY SPECIFICATIONS, VOLUME II

[Added 01-25-2012]

1. Refer to Pages 365 and 366, **Subsection 6.40.2.(C)(c)(1) Personal Computer(s) – Workstation Configuration;**
   Delete the text under **Subsections (a), (b), (c), (d),** (h), (i), and (m), in their entirety;
   Substitute the following revised text:

"(a)	Make and Model:	Dell; HP; Gateway; Acer; or, an approved equivalent. (Note: an approved equivalent requires written approval of the Assistant Commissioner of ITS.)
(b)	Processor:	i5-2400 (6MB Cache, 3.1GHz) or faster computer - Single Processor.
(c)	System Ram:	Minimum of 4GB (Gigabytes) Dual Channel DDR3 SDRAM at 1333MHz – 2 DIMMSs
(d)	Hard Disk Drive(s):	500 GB (Gigabytes) Serial ATA (7200RPM) w/DataBurst Cache, or larger."
"(h)	Video Display Card:	HD Graphics (VGA, HDMI) with a minimum of 64 MB of RAM.
(i)	Monitor:	22" W, 23.0 Inch VIS, Widescreen, VGA/DVI LCD Monitor."
"(m)	Software Requirements:	Microsoft Windows 7 Professional SP1, 64 bit; Microsoft Office Professional 2010; Microsoft Project 2010; Adobe Acrobat reader; Anti-Virus software package with 2 year updates subscription; and, either Auto Cad 2012 LT or Microsoft Visio 2010 Standard Edition, as directed by the Engineer."

~~2. Refer to Page 366, **Subsection 6.40.2.(C)(c)(2)(b);**~~
~~Delete the text under **Subsection (b)**, which begins with the words "(b) One (1) 600 DPI HP Laser Jet . . .", in its entirety;~~
~~Substitute the following revised text:~~

~~"(b) One (1) 600 DPI HP Color Laser Jet all-in-one Printer/Scanner/Copier/Fax (twelve (12) pages per minute or faster) with one (1) Extra Paper Tray (Legal Size) networked to all office computers."~~

3. Refer to Page 367, **Subsection 6.40.3. SPECIFIC REQUIREMENTS FOR ENGINEERS FIELD OFFICE (TYPE A, B, C, CU, D OR DU)**, first paragraph;
Delete the text in the first paragraph of **Subsection 6.40.3.**, in its entirety;
Substitute the following revised text:

6.40.3. SPECIFIC REQUIREMENTS FOR ENGINEER'S FIELD OFFICE (TYPE A, B, C, CU, D, OR DU). In addition to the general requirements, each type of Field Office shall have the minimum floor area indicated in Table 6.40-I calculated based on usable area only, excluding any loss factors. Loss factors are defined as those areas such as lobby, sidewalk window ledge, elevator shafts and stairways. The Contractor shall provide and maintain furnishings for each type of Field Office in the quantity specified in Table 6.40-I. The furnishings shall be new or used equipment satisfactory to the Engineer:

~~4. Refer to Page 368, TABLE 6.40-I, ADDITIONAL REQUIREMENTS SPECIFIC REQUIREMENTS;~~
~~Delete the requirements for a Photocopy Machine shown in the 15th row of TABLE 6.40-I, in its entirety;~~
~~Substitute the following revised requirements:~~

Photocopying Machine – Stand-alone, heavy duty, electric, dry-process color photocopying type with a minimum production rate of 70 pages per minute and an adequate supply of copy paper, toner, etc. The machine shall be capable of duplex copying paper sizes of 8-1/2 x 11 inches, 8-1/2 x 14 inches and 11 x 17 inches, and have separate trays for each paper size. It shall have a document feeder, collator, stapler, and the capability to reduce/enlarge copies between each paper size. The supply of each size copy paper, toner, etc. shall be replenished and the machines shall be maintained for the duration of the contract by the Contractor as required by the Engineer. Make and model can be Minolta, Canon, IBM, Epson, or an approved equivalent, and shall be networked to the office computers.	1	1	1	1	1	1

5. Refer to Page 368, TABLE 6.40-I, ADDITIONAL REQUIREMENTS SPECIFIC REQUIREMENTS;
Insert the following two additional requirements:

Heavy duty commercial grade diamond cut shredder with automatic start. The shredder shall be able to receive 8-1/2 inch wide paper and shred a minimum of 15 sheets simultaneously along with CDs and staples.	1	1	1	1	1	1
Projector – 1080p LCD with a min. of 2200 ANSI Lumins, 1920 x 1080, 16:9, 40,000:1 contrast ratio, HDMI, VGA, USB, and a 10 feet diagonal, 16:9 Projection Screen.	-	-	1	1	1	1

6. Refer to Page 496, Subsection **7.20.4. METHODS**, last paragraph beginning with the words "When directed by the Engineer, due to the original conditions . . .";
Add the following sentence to the end of the last paragraph under **Subsection 7.20.4:**

"However, if the owner at his own expense supplies the replacement frame and doors or hatch covers the Contractor shall install the replacement frame and doors or hatch covers under this Item 7.20, as a basement access reset, in lieu of the steel safety closure plate."

[Added 07-16-2012]

7. Refer to Page 365, **Subsection 6.40.2.(C)(c)(1) "Personal Computer(s) - Workstation Configuration"**;
Delete the text under **Subsections (g) and (k),** in their entirety;
Substitute the following revised text:

"(g)	I/O Ports:	Must have at least one (1) Serial Port, one (1) Parallel Port, and three (3) USB Ports.
(k)	Network Interface:	Integrated 10/100/1000 Ethernet card."

8. Refer to Page 366, **Subsection 6.40.2.(C)(c)(2) "All field offices requiring computers shall be provided with the following:"**;
Delete the text under **Subsection (a),** in its entirety;
Substitute the following revised text:

"(a) One (1) broad-band internet service account. Wideband Internet connectivity at a minimum throughput of 15 Mbps download and 5 Mbps upload is required at each field office location with 1-5 staffers. For larger field offices see table below for minimum required upload speeds. Telephone service should be bundled together with Internet connectivity.Because of throughput requirements Verizon FIOS is the preferred connectivity provider where available.

Office Personnel #	**Upload Speeds (*Minimum*)**
1 - 5	5 Mbps
6 - 10	10 Mbps
11 - 15	15 Mbps
16 - 20 ...	20 Mbps

This account will be active for the life of the project. The e-mail name for the account shall be the DDC Field Office/project Id (e.g. FLD K HWK666 McGuinness@earthlink.com)."

[Added 08-09-2012]

9. Refer to Page 366, **Subsection 6.40.2.(C)(c)(2)(b)**, as amended by Article 2 on page A1-2 of this Addendum;
   Delete the text under **Subsection (b)**, in its entirety;
   Substitute the following words: "**(b) (No Text)**."

10. Refer to Page 368, TABLE 6.40-I, ADDITIONAL REQUIREMENTS SPECIFIC REQUIREMENTS;
    Delete the requirements for a Photocopy Machine shown in the 15th row of TABLE 6.40-I, as modified by Article 4 on page A1-2a of this Addendum, in its entirety;
    Substitute the following revised requirements:

Photocopying Machine – Stand-alone, heavy duty, electric, dry-process color photocopying type with color scan and send capability via e-mail, a minimum production rate of 70 pages per minute and an adequate supply of copy paper, toner, etc. The machine shall be capable of duplex copying paper sizes of 8-1/2 x 11 inches, 8-1/2 x 14 inches and 11 x 17 inches, and have separate trays for each paper size. It shall have a document feeder, collator, stapler, and the capability to reduce/enlarge copies between each paper size. The supply of each size copy paper, toner, etc. shall be replenished and the machines shall be maintained for the duration of the contract by the Contractor as required by the Engineer. Make and model can be Minolta, Canon, IBM, Epson, or an approved equivalent, and shall be networked to the office computers.	1	1	1	1	1	1

[Added 11-26-2012]

11. Refer to Pages 504 through 508, **SECTION 7.88 – Rodent and Waterbug Pest Control**;
    Delete **Section 7.88**, in its entirety;
    Substitute SECTION 7.88 (Revised), as contained on the following pages A1-2d throught A1-2i.

SECTION 7.88 (Revised)
Rodent and Waterbug Pest Control

7.88.1. DESCRIPTION. The Contractor shall provide all labor, materials, plant and equipment, and incidentals required to survey and monitor rodent activity and control any infestation or outbreak of rodents and waterbugs (American cockroaches) within the project limit.

7.88.2. MATERIALS. All materials shall be approved by the New York State Department of Environmental Conservation and comply with the New York City Health Code for the intended usage.

Rodenticide weatherproof bait blocks shall be multiple dose anticoagulants such as Chlorophacinone or Dephacinone, or single feed rodenticides such as ContraMeal, ContracBait block, Quintox pellets or TalonG pellets, or an approved equivalent.

Tamper proof bait station boxes shall be designed to exclude other mammals and shall be used with poisoned bait to attract rats. Information on "tamper proof bait station boxes" is available from the NYC Bureau of Regulatory & Environmental Health Services, Pest Control Office (718-956-7103/4).

Live traps shall be of proper dimensions for trapping rats and shall <u>not</u> be used with poisoned bait.

Insecticide bait shall be a residual type such as phenol methyl carbamate (2%) bait or an approved equivalent.

(A) SUBMITTALS

Prior to commencement of construction activities the Contractor shall submit to the Engineer manufacturer's installation instructions for all materials required for rodent and waterbug pest control work and product data which shall include illustrations, catalog data, product characteristics, typical use, performance, and limitation criteria of all rodent and waterbug pest control materials required.

7.88.3. PERSONNEL. The Contractor shall employ two independent licensed exterminators: one to engage in survey and monitoring work to establish the level of infestation of rodents and insects and provide recommendations for specific Integrated Pest Management (IPM) actions, and one to execute the rodent and waterbug pest control work to deal with such infestations. All pest control personnel employed by each exterminator company must be supervised by an exterminator licensed in categories 7A & 8. The Contractor shall submit the names and license credentials of the two exterminator companies to the Engineer for approval prior to the commencement of any work under this section.

7.88.4. METHODS. Application and dosage of all materials shall be done in strict compliance with the manufacturer's recommendations. All surveying, monitoring, baiting, and/or live trapping work shall be performed in the presence of the Engineer, without which no payment will be made under this Section.

(A) GENERAL

The Contractor's construction activity is expected to disturb any established rodent and/or waterbug population that may exist within the project limits, possibly causing their dispersion. The Contractor shall take all appropriate action to eliminate and/or control these populations within the construction corridor: the construction corridor shall be defined as being the full width of streets under the contract and intersecting streets up to the limits of construction, from property line to property line, excluding buildings and under sidewalk building vaults.

Under the Maintenance of Site requirements for the contract, any unsanitary conditions, such as uncollected garbage or debris, resulting from the Contractor's activities which will provide food and shelter to the resident rodent population shall be corrected by the Contractor immediately after notification of such condition by the Engineer. Non-compliance shall be subject to the application of the "Nonconformance" provisions of the Item for Maintenance of Site, and no payment will be made for any additional application of rodenticide or insecticide needed to control resultant infestations.

(B) SURVEY AND MONITORING WORK

(1) Prior to Construction - The Contractor's designated survey and monitoring exterminator shall execute a survey of the project area and estimate the level of rodent (Norway rat, House mouse) infestation and the waterbug population within the construction corridor. An appropriate sample of utility manholes (sewer, electrical, telephone, etc.) and catch basins should be opened and surveyed to the satisfaction of the Engineer. Contractor shall maintain all survey records in the manner described in 7.88.6., Records and Reports.

(2) During Construction - The Contractor shall monitor the rodent activity through trapping (snap, glue traps or live traps), fecal count methods, and inspection of the conditions of all installed baits every week during construction activity or as otherwise directed by the Engineer. Contractor shall maintain all monitoring records in the manner described in 7.88.6., Records and Reports.

(C) RODENT CONTROL WORK

(1) Wetlands, Woodlands and Areas Within Seventy-five (75') feet of a Stream. In wetlands, woodlands and areas adjacent to a stream, special precautions must be taken to protect water quality and to ensure the safety of other wildlife. To prevent poisoned bait from entering streams, no poisoned bait shall be used in areas within seventy-five (75') feet of either streambank. Live traps must be used in these seventy-five (75') feet buffer zone areas and within wetland and woodland areas.

(2) Outside Wetland Areas, Woodland Areas and Beyond Seventy-five (75') feet of a Stream. In areas outside the seventy-five foot zone of protection adjacent to streams, and areas outside wetlands and woodlands, tamper proof bait stations with poisoned bait shall be established during the period of construction and any consumed or decomposed bait shall be replenished as directed.

Rodent control shall be achieved in two stages as follows:

Stage I. At least one month prior to initiation of the construction work, and periodically thereafter, live traps and/or rodenticide bait, as directed above, shall be placed at locations [e.g., burrows, utility manholes (sewer, electrical, phone, etc.), and catch basins] that are inaccessible to pets, human beings, children and other non-target species, particularly wildlife (e.g., birds) in the construction corridor. Locations of initial bait placement and quantities of bait shall be determined by the survey and monitoring exterminator's written report of his survey and monitoring results, or as otherwise directed by the Engineer.

Stage II. During Construction - Infested sites as determined by the survey and monitoring exterminator's monitoring report shall be baited and/or rebaited, and live traps shall be collected and replaced, the rates and quantities of which shall be determined by the written monitoring reports submitted weekly or as otherwise directed by the Engineer in consultation with the City's Office of Pest Control.

The baiting exterminator shall be responsible for collecting and disposing of all trapped and poisoned rodents found in live traps and tamper proof bait stations. The baiting exterminator shall also be responsible for posting and maintaining signs announcing the baiting of each particular location.

The Contractor, under his maintenance of site operations, shall be responsible for the immediate collection and disposal of any visible rodent remains found on streets or sidewalk within the project limits. Any visible remains shall be placed into double plastic bags. No more than five (5) carcasses shall be placed into each bag. Each bag shall be a minimum of 3 mils thick, black plastic. No additional payment will be made for this work.

It is anticipated that public complaints will be addressed to the Engineer's Field Office. The Contractor, where directed by the Engineer, shall take appropriate Integrated Pest Management (IPM) actions, such as baiting, trapping, proofing, etc., to remedy the source of a complaint within the next six (6) hours of normal working time, which is defined herein, for the purposes of this section, as 7 A.M. to 6 P.M. on Mondays through Saturdays.

(D) WATERBUG (AMERICAN COCKROACH) CONTROL

Infested sites (e.g., sewers) shall be baited at least 2 times per month with insecticides, or as directed by the Engineer in consultation with the exterminator monitoring the work and the City's Office of Pest Control.

7.88.5. EDUCATION & TRAINING. The Contractor shall post notices in all Construction Bulletin Boards advising workers, employees, and residents to call the Engineer's Field Office to report rodent and waterbug infestations. The Contractor shall provide and distribute literature pertaining to IPM techniques of rodent control to affected businesses and superintendents of nearby residential buildings to ensure their participation in maintaining their establishments free of unsanitary conditions, harborage removal and rodent proofing.

Prior to application of any chemicals, the Contractor shall furnish copies or sample labels for each pesticide, antidote information, and Material Data Safety Sheets (MSDS) for each chemical used.

7.88.6. RECORDS AND REPORTS.

(A) GENERAL

The Contractor shall be responsible for assigning within the construction corridor an identifying number to each manhole, catch basin, and other location where bait and/or live trap placement and/or waterbug control work is proposed by the survey and monitoring exterminator. The Contractor shall then provide that list of locations and corresponding reference numbers along with a drawing showing the locations, as a reference for the exterminator(s) performing the work, to indicate locations of bait placement and waterbug control work and rodent and waterbug activity (droppings, bait consumed, dead rodents, etc.).

(B) SURVEY AND MONITORING WORK

(1) Prior to Construction – Contractor shall submit to the Engineer, for approval, a written survey report including proposed IPM procedures, including specific materials, quantities, locations, methods, and time schedule for the implementation of the exterminating work. The written report shall also include a survey with a drawing (provided by the Contractor) marked with locations indicating all signs of rodent (Norway rat, House mouse) infestation and waterbug activity discovered during the execution of the survey indicating that rodent and waterbug pest control work is necessary.

(2) During Construction - Based on monitoring results, Contractor shall submit to the Engineer a weekly written monitoring report identifying all locations and conditions of installed bait and/or other rodent control work. The monitoring report shall also include any other recommended IPM techniques, such as baiting, trapping, proofing, etc., proposed for rodent and waterbug pest control.

The survey and monitoring exterminator shall keep a record of all rodent and waterbug infestation surveys s/he has conducted. The Contractor shall be required to submit a copy of all survey and monitoring reports to the Engineer each week, prior to payment.

(C) RODENT AND WATERBUG CONTROL WORK

The baiting exterminator shall maintain records of all locations baited along with the type and quantity of rodenticide and insecticide bait used. These records will be kept by the City Inspector. A weekly report shall be prepared, signed and certified by the approved licensed exterminator, and such reports shall be submitted to the Engineer each week, prior to payment.

7.88.7. NONCONFORMANCE. If the Contractor fails to perform as directed to control the rodent and/or waterbug population at any location within the project limits for a period of more than one week, the Engineer will correct the adverse conditions by any means he deems appropriate, including but not limited to, the use of "outside services" and shall deduct the cost of the corrective work from any monies due to the Contractor. The deducted cost of this work shall be in addition to the non-payment for rodent and waterbug pest control.

7.88.8. MEASUREMENT.

(A) RODENT INFESTATION SURVEY AND MONITORING

The quantity to be measured for payment under Item No. 7.88 AA, RODENT INFESTATION SURVEY AND MONITORING, shall be a Lump Sum measurement.

(B) RODENT BAIT STATIONS

The quantity to be measured for payment under Item No. 7.88 AB, RODENT BAIT STATIONS, shall be the number of tamper-proof rodent bait station boxes and/or live traps satisfactorily installed or reinstalled after inspection within the construction corridor, as approved by the Engineer. However, the initial baiting, and subsequent rebaiting as may be required, of any bait station will be paid for under Item 7.88 AC.

(C) BAITING OF RODENT BAIT STATIONS

The quantity to be measured for payment under Item No. 7.88 AC, BAITING OF RODENT BAIT STATIONS, shall be the number of tamper-proof rodent bait station boxes, utility manholes, catch basins, or other locations approved by the Engineer, satisfactorily baited or rebaited to replenish consumed or decomposed bait within the construction corridor, as approved by the Engineer.

(D) WATERBUG BAIT APPLICATION

The quantity to be measured for payment under Item No. 7.88 AD, WATERBUG BAIT APPLICATIONS, shall be the number of blocks satisfactorily treated with insecticide bait within the construction corridor, as approved by the Engineer. A block shall be defined as the area of street, measured between property lines, from intersection to intersection. Each rebaiting of any block shall be considered as a new block for measurement purposes.

7.88.9. PRICES TO COVER.

(A) RODENT INFESTATION SURVEY AND MONITORING

Payment will be made at the lump sum price bid for RODENT INFESTATION SURVEY AND MONITORING which shall include the cost of furnishing all the labor, materials, plant, equipment (traps, etc.), insurance, and other incidentals required, including but not limited to providing all required maintenance of traffic equipment, to perform a rodent infestation survey of the project area and then monitor the site each week for rodent activity, all in accordance with the specifications and the directions of the Engineer.

Ten (10%) percent of the lump sum price bid will be paid when the initial survey of the project area has been completed and the written survey report has been submitted to the satisfaction of the Engineer. The remainder will be paid in proportion to the percentage of contract completion.

(B) RODENT BAIT STATIONS

The Contract price bid for RODENT BAIT STATIONS shall be a unit price per each tamper proof bait station box and/ or live trap installed or reinstalled after inspection and shall cover the cost of furnishing all labor, materials, plant, equipment (bait stations, etc.), insurance, and other incidentals, including but not limited to providing all required maintenance of traffic equipment, required to control the rodent population found within the project limits in accordance with the specifications and the directions of the Engineer.

In addition to the payment for Rodent Bait Stations installed or reinstalled under this Item 7.88 AB, the Contractor will also be paid for each baiting or rebaiting, when required, of each bait station, under Item No. 7.88 AC.

(C) BAITING OF RODENT BAIT STATIONS

The Contract price bid for BAITING OF RODENT BAIT STATIONS shall be a unit price per each bait station, utility manhole, catch basin or other location approved by the Engineer satisfactorily baited or rebaited, when required, and shall cover the cost of furnishing all labor, materials, plant, equipment (bait), insurance, and other incidentals, in accordance with the specifications and directions of the Engineer. Installation or resetting of the bait station will be paid for under Item 7.88 AB.

(D) WATERBUG BAIT APPLICATION

The Contract price bid for WATERBUG BAIT APPLICATION shall be a unit price per block treated by the exterminator and shall include the cost of furnishing all the labor, materials, plant, equipment (bait, etc.), insurance, and other incidentals, including but not limited to providing all required maintenance of traffic equipment, necessary to control the waterbug population found within the project limits for the duration of the contract in accordance with the specifications and the directions of the Engineer.

Payment will be made under:

Item No.	Item	Pay Unit
7.88 AA	RODENT INFESTATION SURVEY AND MONITORING	L.S.
7.88 AB	RODENT BAIT STATIONS	EACH
7.88 AC	BAITING OF RODENT BAIT STATIONS	EACH
7.88 AD	WATERBUG BAIT APPLICATION	BLOCK

END OF ADDENDUM NO. 1

This Addendum consists of fourteen (14) pages

ATTACH TO CONTRACT DOCUMENTS

THE CITY OF NEW YORK
DEPARTMENT OF DESIGN AND CONSTRUCTION
INFRASTRUCTURE DIVISION
BUREAU OF DESIGN

PROJECT ID: QED1008

FOR THE INSTALLATION OF 60-INCH AND 12-INCH WATER MAINS IN: 54TH STREET BETWEEN FLUSHING AVENUE AND GRAND AVENUE

Together With All Work Incidental Thereto

BOROUGH OF QUEENS

ADDENDUM NO. 2

DATED: February 20, 2013

This Addendum is issued for the purpose of amending the requirements of the contract documents and is hereby made part of said contract documents to the same extent as if it was originally included therein.

The Standard Sewer Specifications of the Department of Environmental Protection (dated August 1, 2009), Sewer Design Standards of the Department of Environmental Protection (dated (September 2007) Revised January 2009), Standard Water Main Specifications of the Department of Environmental Protection (dated August 1, 2009), Water Main Standard Drawings of the Department of Environmental Protection (latest revisions), and the Standard Highway Specifications (Volumes I and II) of the Department of Transportation (dated November 1, 2010) of The City of New York, shall be included as part of the contract documents. These said specifications and standard drawings are hereby revised under the following section headings:

A. NOTICE TO BIDDERS
B. AMENDMENTS TO THE STANDARD HIGHWAY SPECIFICATIONS
C. AMENDMENTS TO THE STANDARD SEWER SPECIFICATIONS
D. AMENDMENTS TO THE STANDARD WATER MAIN SPECIFICATIONS

A. NOTICE TO BIDDERS

(1) (A) The Contractor is advised that copies of the Standard Sewer Specifications (dated August 1, 2009), Sewer Design Standards (dated (September 2007) Revised January 2009), Standard Water Main Specifications (dated August 1, 2009), Specifications For Trunk Main Work (dated March 2012) and Water Main Standard Drawings (latest revisions) are available to all prospective bidders at no cost upon presentation of receipt of purchase of Bid Package at the following location:

Department of Design and Construction
Division of Infrastructure
Design Services, Specifications, 3rd Floor
30-30 Thomson Avenue
Long Island City, NY 11101

(B) The Contractor is advised that copies of the Standard Highway Specifications (Volume I and II) (dated November 1, 2010), Standard Highway Details of Construction (latest revisions), Division of Street Lighting Specifications (latest revisions), Division of Street Lighting Standard Drawings (latest revisions), Standard Specifications for Traffic Signals (latest revisions), and Standard Drawings for Traffic Signals (latest revisions) are available to all prospective bidders for a fee at the following location:

Department of Transportation
55 Water Street, Ground Floor
New York City, NY 10041

(2) The Contractor is notified that it is the intent of this Agency to commence work promptly after registration of the contract and to order the Contractor to commence work within two (2) months after registration.

(3) The Contractor shall furnish, install, maintain and subsequently remove temporary Protective Tree Barriers. Protective Tree Barriers shall be Type B, unless otherwise directed by the Engineer, and shall be constructed and installed as shown on the Protective Tree Barrier sketch in Department Of Transportation, Standard Highway Details Of Construction, Drawing No. H-1046A, as directed by the Engineer, and in accordance with Department of Parks and Recreation requirements.

(4) All utility locations and invert elevations are not guaranteed, nor is there any guarantee that all existing utilities, whether functional or abandoned within the project area are shown.

(5) All existing house connections shall be maintained and supported during construction. The Contractor shall replace any existing house connection damaged as a result of the Contractor's construction operations as ordered by the Engineer at no cost to the City.

(6) The Contractor is advised that any City owned light poles, traffic signals, traffic signs and encumbrances including, but not limited to, underground conduit displaced as the result of the installation of the new sewers, water mains, catch basins, catch basin connections and appurtenances shall be replaced in kind and as directed by the Engineer. The cost of such work shall be deemed included in the prices bid for all items of work under this contract.

(7) The Contractor is notified that Victaulic Style 77 Coupling is no longer acceptable for use in any steel water main work. All reference to Victaulic Style 77 Coupling within the Standard Water Main Specifications of the Department of Environmental Protection (dated August 1, 2009), the Water Main Standard Drawings of the Department of Environmental Protection (latest revisions), the Specifications For Trunk Main Work (dated March 2012), and the contract drawings, shall be replaced with Bolted Split-Sleeve Restrained Coupling.

(8) The Contractor is responsible for any damage to the existing street and traffic signal equipment, including underground conduits and the safety of both pedestrian and vehicular traffic for the duration of the contract.

Should any conduits, cables or foundations need repair due to the Contractor's negligent operations during construction, all work shall be performed according to NYCDOT Bureau of Traffic's Standard Drawings and Specifications at the sole expense of the Contractor.

It is the Contractor's responsibility to secure an approved electrical contractor to perform all traffic signal work (if any). For list of approved electrical contractors, contact Mr. Michael R. LeFosse of New York City Department of Transportation at (718) 786-2236.

(9) The Contractor is advised that where the existing roadway pavement is designated to be replaced from curb to curb, then no full depth saw cutting of pavement for sewer and water main trenches will be required, except at the limits of full width pavement restoration. No separate or additional payment will be made for any saw cutting.

(10) The Contractor is notified that at some locations, existing sewers, manholes, water mains, etc. which are to remain undisturbed are in close proximity to the line of the proposed work. The Contractor shall exercise extreme care, minimize the trench width of the proposed water main and take all necessary precautions in placing sheeting and during excavation of the trenches to prevent damage to the existing city-owned structures that are to remain undisturbed. Any damage to existing city-owned structures caused by the Contractor's construction operations shall be repaired or replaced as directed by the Engineer. The cost of such repair or replacement shall be borne solely at the Contractor's own expense.

(11) The Contractor shall exercise extreme caution and take all necessary precautions in placing sheeting and excavating to prevent any damage to the existing LIRR structures and its appurtenances during construction work throughout the project area. The Contractor shall take full responsibility to protect the said LIRR structures and its appurtenances and any damage caused by the Contractor's operations shall be made good by the Contractor to the satisfaction of the Engineer at no additional cost to the City.

(12) The Contractor shall submit shop drawings to LIRR showing all the details and methods of construction, such as, sheeting and bracing, including the Contractor's procedure and sequence of construction, supporting and/or protection of the existing LIRR structures and its appurtenances, with necessary design calculations for approval prior to starting of the construction. The design shall be made by a New York State Licensed Professional Engineer skilled in this type of construction and as further evidenced by the imprint of Professional Engineer's seal and signature on all drawings. The cost of this work shall be deemed included in the price bid for all items of work under this contract.

(13) The Contractor shall contact the LIRR prior to the start of construction so as to obtain any permit(s) that may be required when performing sewer and water main work within the area of influence of LIRR structure or property. No work shall commence on this project until such permit(s) have been obtained from the LIRR (if required). No separate or additional payment will be made for the work required to obtain and update such permit(s) or for complying with the requirements of such permit(s), the cost shall be deemed included in the prices bid for all contract items of work.

B. AMENDMENTS TO THE STANDARD HIGHWAY SPECIFICATIONS

(NO TEXT)

C. AMENDMENTS TO THE STANDARD SEWER SPECIFICATIONS

(1) **Refer** to **Subsection 1.06.3 - Hours Of Work**, Page I-4:
Add the following to **Subsection 1.06.3**:

(A) HOLIDAY CONSTRUCTION EMBARGO - A special Holiday Construction Embargo shall be in effect on the Friday of the week preceding Thanksgiving Day week from 6:00 AM to 11:59 PM and again from the Monday of Thanksgiving Day week from 6:00 AM through January 2, at 11:59 PM. Roadway and sidewalk construction activities will be restricted during the embargo period on the streets listed below*.

Any permits issued prior to the date of this notice, for work during this embargo period on the streets listed below which do not already have the permit stipulation "410" are hereby suspended for the period noted above. All permittees must comply with this embargo unless a special waiver is granted by OCMC. Waiver requests must be filed at least thirteen (13) days before Thanksgiving Day, in the Permit Office by filing a "Request for Roadway/Sidewalk Permits During Embargo Periods" and submitting supporting documentation. Waiver requests should only be submitted for critical reasons for a specific project. If a waiver is granted, the applicant will be notified so they can apply for the approved permits. Waivers **are not** required for ongoing Building Construction Activity Permits which already include the "410" permit stipulation. Waiver request forms may be obtained at any Permit Office or on the Department of Transportation's website at:

http://www.nyc.gov/html/dot/downloads/pdf/holidayembapp.pdf

Prior to this embargo period all necessary measures must be taken so that all roadways and sidewalks are in proper condition to allow for the expeditious and safe movement of vehicular, bicycle and pedestrian traffic. Tool carts, cable reels, containers, and material stored on roadways must be removed during the embargo period.

The opening of utility access covers is prohibited on any of the streets noted below between the hours of 6:00 AM and midnight unless the utility or contractor files for an Emergency Authorization Number as required by section 2-07 of the Department of Transportation's Highway Rules. The planned opening of utility access covers may occur during the hours of 12:01 AM and 5:59 AM where no authorization number is required.

Temporary restoration of the streets and sidewalks and removal thereof, if required for the Holiday Embargo period, will be paid for under the appropriate scheduled items.

No extension of time due to the shutdown period will be granted to the Contractor for completion of the work.

*** Please note that this embargo only applies to NYCDOT construction permits. List of street and maps of the affected locations are available by borough on the Department of Transportation's website at: http://www.nyc.gov/html/dot/html/motorist/trafalrt.shtml**

(2) **Refer** to **Subsection 1.06.27 - Salvageable Materials**, Page I-14:
Delete the paragraph starting with the words, "No salvageable material...", and ending with the words, "...from the site.", in its entirety:
Substitute the following:

Except as specified below, no salvageable material shall be returned to the New York City Department of Environmental Protection regardless of condition. It shall become the property of the Contractor for removal and disposal, by the Contractor, away from the site.

The Contractor shall salvage and deliver to a designated NYCDEP yard all Metropolitan Valves (6" thru 20") removed during construction of the contract.

(3) **Refer** to **Subsection 1.06.29 - Contractor To Provide For Traffic**, Page I-15:
Add the following to **Subsection 1.06.29**:

See amended Standard Water Main Specifications (August 1, 2009) **Subsection 1.06.29 - Contractor To Provide For Traffic** of this addendum.

(4) **Refer** to **Section 1.08 - Miscellaneous Provisions**, Page I-19:
Delete Subsection 1.08.2 - Vendors in its entirety:
Substitute the following new **Subsection 1.08.2**:

1.08.2 VENDORS

Prior to starting work, the Contractor shall submit in writing to the Engineer the names of all vendors and manufacturers the Contractor intends to use. Unless otherwise specified in the contract documents or a written exception is granted by NYCDDC, the Contractor shall submit only one (1) vendor or manufacturer for each product that is to be incorporated in the contract. The use of multiple vendors or manufacturers to supply the same product will be prohibited, unless otherwise specified in the contract documents or a written exception is granted by NYCDDC. If the vendor or manufacturer is not approved, the Contractor will be notified to either submit another vendor or manufacturer, or have their proposed vendor or manufacturer submit a request for approval from NYCDDC. The Contractor will be prohibited from using the vendor or manufacturer until approval of the vendor or manufacturer has been acquired from NYCDDC.

(5) **Refer** to **Section 1.08 - Miscellaneous Provisions**, Page I-20:
Add the following new **Subsection 1.08.7**:

1.08.7 SUBMITTAL OF SCHEDULE LOG

The Contractor's attention is directed to **Article 9 - Progress Schedule** of the Contract. The Contractor shall submit along with the proposed progress schedule the following: A schedule log in Excel Format (tied to the proposed progress schedule) indicating a description of and the schedule submission dates for all required submittals, shop drawings, approval requests, design mixes, reports, samples, etc., as required by the specifications and the terms of the contract.

(6) **Refer** to **Section 2.05 - Precast Reinforced Concrete Pipe**, **Subsection 2.05.4 - Materials, Workmanship And Finish**, Page II-10:
Delete from **Subsection 2.05.4**, paragraph (A) CONCRETE in its entirety:
Substitute the following:

(A) CONCRETE - The Concrete shall comply with the requirements of **General Specification 11 - Concrete, as modified in Section 2.15**, and be a homogeneous mixture of such proportions and quality that the pipe will conform to the design and test requirements of these specifications.

(7) **Refer** to **Section 2.15 - Concrete**, **Subsection 2.15.3 - Modifications**, Page II-23:
Delete from **Subsection 2.15.3**, **Reference Number D 3.2.1** together with its paragraphs in their entirety:
Substitute the following:

D 3.2.1 DELETE 3.2.1 to 3.2.9 of GS11 and SUBSTITUTE the following:

All concrete mix designs shall be subject to approval by DDC's Quality Assurance and Construction Safety (QACS) Bureau and in accordance with their "MIX DESIGN,

LABORATORY AND PLANT APPROVAL PROTOCOL". Copies of this protocol may be obtained at the preconstruction meeting or from the Engineer. Before the Contractor begins to manufacture concrete, the Contractor shall secure DDC's QACS approval of the mix design the Contractor proposes to use.

The Contractor shall submit for this purpose a statement, in writing, of the sources of all ingredient materials, the type and brand of the cement and the number of pounds of each of the materials in a saturated surface-dry condition making up one (1) cubic yard of concrete. The range of water-cement ratios within which the concrete will be manufactured and the method of mixing to be employed shall also be stated. The mix design submittal shall include gradation of aggregates, specific gravities of ingredients, unit weight, mix proportion for each batch (a minimum of four (4) batches except in case of precast plants where one specific mix may be proposed), compressive strength test results for each mix at 7-days, 28-days (high-early strength mixes may require 6-hours, 24-hours, 3-days and shrinkage test as per the requirements), and graphical representation of strength vs. W/C projected in hours/days.

The Contractor may submit for approval concrete mixes that (within one (1) year of the contract) have been previously approved and used on other jobs with any Bureau of the Department of Environmental Protection or the Department of Design and Construction. Such submittals shall contain evidence that the concrete mix was approved within one (1) year of this contract and shall show that the concrete will be produced at the same mix plant, that the cement and admixtures are the same type (though not necessarily the same brand), that the water/cement ratio is the same and that adjustments have been made in the mix for air content, specific gravity and gradation of the aggregates.

If the Contractor elects to submit a concrete mix that was not previously approved, the Contractor shall submit the new concrete mix in accordance with Chapters 2 and 3 of General Specification 11 as modified herein.

(8) **Refer** to **Section 2.15 - Concrete**, **Subsection 2.15.3 - Modifications**, Page II-26:
Add to **Subsection 2.15.3**, before **Reference Number D 8.2** the following:

D 7.3.3 ADD the following to Subsection 7.3.3 of GS11:

Each Portland cement concrete batching plant shall be subject to approval by DDC's Quality Assurance and Construction Safety (QACS) Bureau and in accordance with their "MIX DESIGN, LABORATORY AND PLANT APPROVAL PROTOCOL". Copies of this protocol may be obtained at the preconstruction meeting or from the Engineer. The minimum requirement for approval is that the proposed Portland cement concrete batching plant must be on the New York State Department of Transportation (NYSDOT) approved list for the current construction season.

The minimum requirement for approval of a precast concrete plant is that the proposed plant must be on the NYSDOT approved list. A waiver for this requirement may be granted by the DDC's Quality Assurance and Construction Safety (QACS) Director for special products that no NYSDOT approved plant is capable of producing.

Each Portland cement concrete batching plant shall also be subject to auditing and approval of the DDC's Director of Quality Assurance and Construction Safety (QACS). The Director of QACS may at any time discontinue the use of any previously approved equipment if nonconformance with the specifications results during the progress of the work. When the Director of QACS discontinues the use of the plant, production will not be acceptable for Department work until corrective measures satisfactory to the Director are carried out.

(9) **Refer** to **Section 2.15 - Concrete**, **Subsection 2.15.3 - Modifications**, Page II-26:
Delete from **Subsection 2.15.3**, **Reference Number D 16.3** together with its paragraphs in their entirety:
Substitute the following:

D 16.3 Testing Service - ADD the following:

The Contractor shall retain the services of an independent testing laboratory to provide for the services outlined in 16.3.1.4 to 16.3.1.11 of GS11, with the exception of those tests specified herein to be performed by the Engineer and the City Retained Laboratory.

All laboratories shall be subject to approval by DDC's Quality Assurance and Construction Safety (QACS) Bureau and in accordance with their "MIX DESIGN, LABORATORY AND PLANT APPROVAL PROTOCOL". Copies of this protocol may be obtained at the pre-construction meeting or from the Engineer. The minimum requirement for approval is that the laboratory must have the current AMRL/AASHTO R-18 accreditation in the category of service proposed and must be currently licensed by the NYC Department of Buildings (DOB).

(10) **Refer** to **Section 2.15 - Concrete**, **Subsection 2.15.3 - Modifications**, Page II-26:
Delete from **Subsection 2.15.3**, **Reference Number D 16.8** together with its paragraphs in their entirety:
Substitute the following:

D 16.8 Responsibilities and Duties of Contractor - ADD the following:

The Contractor may, if the Contractor so desires, take cylinders corresponding to those taken by the Engineer for the City Retained Laboratory. However, determination of payment will be based solely on the cylinders taken by the Engineer for the City Retained Laboratory.

CONCRETE TEST CYLINDERS

The Contractor will be responsible for safe delivery of concrete cylinders to the Department of Design and Construction Laboratory, within two (2) days after molding, where they will be properly stored and cured until the date of test, and tested by others, upon removal from the curing room. The Department of Design and Construction testing laboratory will provide the services for the curing and breaking of the test cylinders.

The Contractor shall provide empty cylinder molds and facilities for the proper care of these cylinders while on the site, and shall safeguard them against injury and protect them from the elements.

The Engineer will be responsible for the preparation, documentation and labeling of the cylinders and for notifying the Contractor, at least twenty-four (24) hours in advance, when a shipment of cylinders is ready for delivery, so that cylinders can be tested for the standard twenty-eight (28) day and seven (7) day tests. Cylinders are to be delivered by the Contractor to a designated area near 30-30 Thomson Avenue, Long Island City, New York, or where otherwise directed within the City of New York.

The Contractor shall make arrangements to protect all cylinders from damage during loading, transport to, and unloading at a Department of Design and Construction designated testing laboratory, and shall obtain a receipt for delivered cylinders, which shall be submitted to the Engineer.

(11)<u>Refer</u> to **Section 4.06 - Backfilling, Subsection 4.06.3 - Method Of Depositing All Backfill**, Page IV-18:

(A) <u>Add</u> the following paragraph to beginning of **Subsection 4.06.3**:

At the preconstruction meeting, the Contractor shall submit for approval a full description of the Contractor's proposed methods to be used for all backfilling operations including, but not limited to, equipment, backfill material, depth of compaction layers, and trench locations where each is to be employed. In the field, the Contractor shall be required to demonstrate that the Contractor's methods of backfilling and compaction shall obtain a minimum of ninety-five (95) percent of Standard Proctor Maximum Dry Density.

(B) <u>Delete</u> from **Subsection 4.06.3**, the fourth paragraph in its entirety:
<u>Substitute</u> the following:

Unless otherwise approved in writing by the Engineer, backfilling of the remainder of the trenches and excavations from a point not less than two (2) feet above the top of the sewer conduit (i.e. sewer pipes on cradles or encasements, reinforced concrete sewers, basin and house connections, culverts, etc.) to the underside of the pavement shall be progressively deposited in uniform and successive horizontal layers not exceeding twelve (12) inches in depth for the entire width of the trench or excavation and each successive layer shall be solidly compacted by mechanical tamping or other approved means so as to achieve the required density. In deep trenches defined as those requiring sheeting, the Contractor may submit to the Engineer, for approval, an alternate backfill method (i.e. jetting, deeper deposited layers not exceeding twenty-four (24) inches, etc.) for depositing and compacting the backfill from two (2) feet above the top of the sewer conduit to a plane five (5) feet below final surface elevation. However, approval of any alternate backfill method shall not relieve the Contractor from obtaining a minimum of ninety-five (95) percent of Standard Proctor Maximum Dry Density. Should the Engineer determine that the specified density is not being obtained, the area must be re-excavated and backfilled at the Contractor's own cost until the required compaction density is achieved.

(C) <u>Delete</u> from **Subsection 4.06.3**, the seventh paragraph in its entirety:
<u>Substitute</u> the following:

Backfill shall proceed simultaneously with the withdrawal of sheeting but at no time shall the withdrawal of sheeting exceed a height of six (6) inches above the deposited backfill. Withdrawal of sheeting below levels previously backfilled and compacted is prohibited.

(12)<u>Refer</u> to **Section 5.01 - Reinforced Concrete Sewers, Subsection 5.01.4 - Precast Reinforced Concrete Sewer**, Paragraph (C) - Details, second paragraph, first line, Page V-4:
<u>Change</u> the words "C789 or C850 (as required)", to "C1433":

(13)<u>Refer</u> to **Section 5.05C - Reconstruction Of Existing Sewers Using D.E.P. Approved Cured-In-Place-Pipe (CIPP) Lining Method, Subsection 5.05C.6 - Separate Payment**, third paragraph, second line, Page V-49
<u>Change</u> the word, "nine", to "eleven":

(14)<u>Refer</u> to **Section 5.11 - Outfall Structures, Subsection 5.11.2 - Materials**, Page V-95:
<u>Delete</u> from **Subsection 5.11.1**, paragraph (A) in its entirety:
<u>Substitute</u> the following:

(A) Concrete used for outfall structure (including headwalls, reinforced concrete sewer outfalls, cradles and encasements, chambers, manholes and catch basins) shall comply with the requirements of **General Specification 11 - Concrete, as modified in Section 2.15**; and, shall contain entrained air of six percent (6%), and a corrosion inhibitor. The corrosion inhibitor shall consist of a calcium

nitrite solution, containing 30 ±2% calcium nitrite solids by weight and having a specific gravity of 1.27 ±0.02. The corrosion inhibitor when used in the manufacturing process shall not produce a significant amount of chloride ions in the final product (less than 1,000-ppm). The ph shall be greater than 8. The admixture shall not contain chemicals that produce a condition injurious to the quality and durability of the concrete or reinforcing steel. Calcium nitrite, which acts as an accelerator, may be used in conjunction with compatible retarding admixtures to control setting time and workability of the concrete; consult the manufacturer of the product. The corrosion inhibitor must be added to the mix immediately after air entraining and retarding admixtures have been introduced into the batch. Acceptance of calcium nitrite based corrosion inhibitor shall be based upon it being listed in the most current New York State Department of Transportation's "Approved List Of Calcium Nitrite Based Corrosion Inhibitors".

(15)<u>Refer</u> to **Section 5.18A - Sewer Cleaning**, **Subsection 5.18A.3 - Disposal**, Page V-124:
<u>Delete</u> from **Subsection 5.18A.3**, the first paragraph in its entirety:
<u>Substitute</u> the following:

All material removed from the sewers and sewer portions through the manholes under this contract shall become the property of the Contractor and shall be properly disposed of away from the site, at the Contractor's expense.

(16)<u>Refer</u> to **Section 5.23 - Decking**, **Subsection 5.23.1 - Description**, Page V-161:
<u>Delete</u> from **Subsection 5.23.1**, the third paragraph in its entirety:
<u>Substitute</u> the following:

Steel plates that are resting on pavement, that are not part of a decking system, and are used to temporarily span trenches and excavations for vehicular traffic and for pedestrian crossings and walkways shall not be included for payment under this decking section. The cost of all labor, materials, equipment, insurance and incidentals necessary to furnish, place, anchor and ramp these temporary steel plates, when and where directed, in order to comply with the requirements of the NYCDOT Office of Construction Mitigation and Coordination (OCMC) traffic stipulations, the directions of the Engineer, and the Contractor's construction operations shall be deemed included in the prices bid for all contract items of work.

(17)<u>Refer</u> to **Section 5.23 - Decking**, **Subsection 5.23.4 - Design Criteria**, Page V-162:
<u>Add</u> the following to **Subsection 5.23.4**:

(C) The Contractor may substitute skid resistant steel plates (Non-Skid Textured Plates) for timber mats, subject to approval in accordance with **Subsection 4.05.5**. These steel plates shall be placed flush with the existing roadway and shall be installed in compliance with the requirements of **Subsection 4.05.6(G)**.

(18)<u>Refer</u> to **Section 5.32 - Final Restoration Of Pavements**, Page V-183:
<u>Add</u> the following to **Subsection 5.32.4 - Specific Pavement Restoration Provisions**:

See amended Standard Water Main Specifications (August 1, 2009) **Subsection 5.32.4 - Specific Pavement Restoration Provisions** of this addendum.

(19)<u>Refer</u> to **Section 5.36 - Additional Earth Excavation Including Test Pits**, **Subsection 5.36.4 - Price To Cover**, Paragraph (3), fifth line, Page V-195:
<u>Change</u> 16", to 16'.

D. AMENDMENTS TO THE STANDARD WATER MAIN SPECIFICATIONS

(1) **Refer** to **Subsection 1.06.3 - Hours Of Work**, Page I-4:
Add the following to **Subsection 1.06.3**:

(A) HOLIDAY CONSTRUCTION EMBARGO - A special Holiday Construction Embargo shall be in effect on the Friday of the week preceding Thanksgiving Day week from 6:00 AM to 11:59 PM and again from the Monday of Thanksgiving Day week from 6:00 AM through January 2, at 11:59 PM. Roadway and sidewalk construction activities will be restricted during the embargo period on the streets listed below*.

Any permits issued prior to the date of this notice, for work during this embargo period on the streets listed below which do not already have the permit stipulation "410" are hereby suspended for the period noted above. All permittees must comply with this embargo unless a special waiver is granted by OCMC. Waiver requests must be filed at least thirteen (13) days before Thanksgiving Day, in the Permit Office by filing a "Request for Roadway/Sidewalk Permits During Embargo Periods" and submitting supporting documentation. Waiver requests should only be submitted for critical reasons for a specific project. If a waiver is granted, the applicant will be notified so they can apply for the approved permits. Waivers **are not** required for ongoing Building Construction Activity Permits which already include the "410" permit stipulation. Waiver request forms may be obtained at any Permit Office or on the Department of Transportation's website at:

http://www.nyc.gov/html/dot/downloads/pdf/holidayembapp.pdf

Prior to this embargo period all necessary measures must be taken so that all roadways and sidewalks are in proper condition to allow for the expeditious and safe movement of vehicular, bicycle and pedestrian traffic. Tool carts, cable reels, containers, and material stored on roadways must be removed during the embargo period.

The opening of utility access covers is prohibited on any of the streets noted below between the hours of 6:00 AM and midnight unless the utility or contractor files for an Emergency Authorization Number as required by section 2-07 of the Department of Transportation's Highway Rules. The planned opening of utility access covers may occur during the hours of 12:01 AM and 5:59 AM where no authorization number is required.

Temporary restoration of the streets and sidewalks and removal thereof, if required for the Holiday Embargo period, will be paid for under the appropriate scheduled items.

No extension of time due to the shutdown period will be granted to the Contractor for completion of the work.

*** Please note that this embargo only applies to NYCDOT construction permits. List of street and maps of the affected locations are available by borough on the Department of Transportation's website at: http://www.nyc.gov/html/dot/html/motorist/trafalrt.shtml**

(2) **Refer** to **Subsection 1.06.27 - Salvageable Materials**, Page I-14:
Delete the paragraph starting with the words, "No salvageable material...", and ending with the words, "...from the site.", in its entirety:
Substitute the following:

Except as specified below, no salvageable material shall be returned to the New York City Department of Environmental Protection regardless of condition. It shall become the property of the Contractor for removal and disposal, by the Contractor, away from the site.

The Contractor shall salvage and deliver to a designated NYCDEP yard all Metropolitan Valves (6" thru 20") removed during construction of the contract.

(3) **Refer** to **Subsection 1.06.14 - Notice To Utility Companies, Etc., To Remove Structures Occupying Place Of Sewers, Water Mains Or Appurtenances**, Page I-10:
Add the following to **Subsection 1.06.14**:

(1) CONSOLIDATED EDISON COMPANY OF NEW YORK (CON EDISON)

There are CON EDISON facilities in the area of construction. The Contractor shall notify CON EDISON at least seventy-two (72) hours prior to the start of construction by contacting Mr. Joe Bedell at (718) 275-2458.

(2) NATIONAL GRID

There are NATIONAL GRID facilities in the area of construction. The Contractor shall notify NATIONAL GRID at least seventy-two (72) hours prior to the start of construction by contacting Mr. Neville Jacobs Jr. at (718) 963-5612 or at NEVILLE.JACOBS@us.ngrid.com .

(3) VERIZON

There are VERIZON facilities in the area of construction. The Contractor shall notify VERIZON at least seventy-two (72) hours prior to the start of construction by contacting Mr. Anthony Foster at (718) 528-4836.

(4) TIME WARNER CABLE OF NEW YORK CITY

There are TIME WARNER CABLE facilities in the area of construction. The Contractor shall notify TIME WARNER CABLE at least seventy-two (72) hours prior to the start of construction by contacting Mr. John Piazza at (718) 888-4261.

(4) **Refer** to **Subsection 1.06.20 - Contractor To Notify City Departments**, Page I-12:
Add the following to **Subsection 1.06.20**:

(1) N.Y.C. D.E.P., BUREAU OF WATER AND SEWERS OPERATIONS

The Contractor shall notify Mr. James Garin, P.E., Assistant Commissioner, Engineering at the Department of Environmental Protection, 59-17 Junction Blvd., 3rd floor low rise, Corona N.Y. 11368, at least thirty (30) days prior to the start of construction.

(2) NEW YORK CITY FIRE DEPARTMENT

The Contractor shall notify the Bureau of Fire Communications at least thirty (30) days prior to the start of construction by contacting Mr. Edward Durkin or Mr. Edward Durkin at (718) 624-3752.

(3) N.Y.C. DEPARTMENT OF TRANSPORTATION

The Contractor shall notify Mr. Steve Galgano, P.E. Chief of Signal/Street Lighting Operations, 34-02 Queens Blvd., Long Island City, N.Y. 11101 at (718) 786-3550, at least seventy-two (72) hours prior to the start of construction.

(4) N.Y.C. DEPARTMENT OF PARKS AND RECREATION

The Contractor shall notify the Parks Department at least seventy-two (72) hours prior to the start of construction by contacting Mr. Shawn Maerz at (718) 699-4700.

(5) N.Y.C. TRANSIT AUTHORITY

(a) The Contractor is advised that bus routes as well as bus stops, within the scope of this project may be affected during construction operations. The Contractor shall notify the Transit Authority at least two (2) weeks prior to the start of construction, in order to make the necessary arrangements.

Arrangements shall be made through:

Ms. Sarah Wyss
Director Of Short Range, Bus Service Planning (SRB)
New York City Transit
2 Broadway, Room B17.50
New York, N.Y. 10004
Telephone No. (646) 252-5517
sarah.wyss@nyc.com

(6) LONG ISLAND RAIL ROAD (LIRR)

There are LIRR facilities in the area of construction. The Contractor shall notify LIRR at least two (2) weeks prior to the start of construction by contacting Mr. Chung Chu Shen at (516) 779-1372. The Contractor shall comply with the requirements as specified in **Sections 1.06.24A and 1.06.24B** of this addendum.

(5) **Refer** to **Subsection 1.06.24 - Contractor To Carry Out Agreement Between City And Railroad Company Or Property Owner(s)**, Page I-14:
Add the following to **Subsection 1.06.24**:

1.06.24A LIRR GENERAL NOTES AND REQUIREMENTS

(A) GENERAL NOTES:

(a) General Requirements For Projects Adjacent To LIRR Property With Potential To Impact LIRR Safety And Operations:

(1) Attached are "General Requirements For Outside Contractors Working On LIRR Property". These requirements apply to this project. Cost of LIRR personnel (i.e. flag protection, project engineers, inspectors, etc.) required by the project will be paid for directly to the LIRR by the City.

(2) Shop drawings and calculations detailing sheeting must be submitted prior to excavation, which may impact the stability of adjacent embankment or structures supporting our tracks. Shop drawings and calculations shall include the original seal and signature of a New York State Licensed Professional Engineer. Sheeting shall be designed for Cooper E-80 Axle Loading as per the American Railway Engineering Association.

(3) Drawings submitted to the LIRR for review shall be transmitted electronically on a CD or DVD with each drawing clearly defined. The format for the drawing can be either pdf or AutoCAD plotted to full size.

(4) LIRR flagging will be required at all times when performing work at or near the LIRR structure.

(5) Fouling of LIRR track includes work within 15-feet of or above LIRR tracks. This also includes operation of equipment or any part of equipment, (i.e. crane booms) which could fall onto or within six (6) feet of LIRR tracks.

(6) All parties are notified that fouling LIRR track without LIRR flag protection being present is a violation of federal law.

(7) Cranes:
   (a) Cranes operations must maintain at least 15-feet vertical and horizontal separation from overhead LIRR's High Tension lines. If overhead power lines, from outside agencies, are supported from LIRR High Tension poles, a letter from that agency must be submitted to the LIRR stating their vertical and horizontal separation requirements.
   (b) The following conditions apply for operating cranes with booms of sufficient length to fall onto or within six (6) feet of LIRR's tracks:
      (1) Cranes information must be submitted to the LIRR for review, including proposed location of crane, proposed boom angle and loading diagram indicating that the crane is capable of supporting 150% of the load to be lifted. Loading diagram shall include original seal and signature of New York State Licensed Professional Engineer.
      (2) LIRR flag protection must be on site. Crane operations will generally be restricted from 10:00 a.m. to 3:00 p.m. daily.
      (3) Crane operators or one (1) construction supervisor who will be on the site full time, must be trained and certified in Roadway Worker Protection.
      (4) Crane operators must follow the direction of LIRR's flagmen and face boom parallel to LIRR's track, when ordered to do so.

(b) General Requirements For Survey By Outside Contractor On LIRR Property:

(1) All survey party members employed by an outside contractor shall herein be referred to as the "contractor"

(2) Permanent and temporary marking of LIRR track structure is not permitted. LIRR track structure consists of running rail (track), rail fasteners, concrete ties, wood ties.

(3) Reflective paint shall not be used on or adjacent to LIRR property.

(4) Nonreflective red, orange or yellow paint shall not be used on LIRR property.

(5) Electric third rail must be considered energized at all times. The contractor must not come into contact with or attempt to mark the electric third rail, third rail cover board or third rail cover board brackets.

(c) Specific Requirements:

(1) This project is adjacent to LIRR's Broadway Street Station; therefore, station entrances must be open and accessible at all times. Protection of LIRR property and facilities is the responsibility of the Contractor and at no additional cost to the City. All damage to LIRR property caused by the Contractor's operation shall be repaired by the Contractor or repaired by the LIRR and charged to the Contractor.

(2) The Contractor shall contact LIRR for the following:
   (a) Obtaining Permits - Mr. Edward Maines at (718) 558-3536.
   (b) Insurance Submittal - Ms. Carol Berlingieri at (646) 252-1429.
   (c) Civil Design And Inspection - Joseph El-Kallassy at (718) 558-3218.
   (d) Compliance With Safety Training Requirements - Training Department (718) 558-3128.
   (e) Obtaining Flag Protection - Flag Desk (631) 893-2799.

(B) REQUIREMENTS:

The following shall become a part of and apply to the contract:

(a) <u>LONG ISLAND RAIL ROAD INSURANCE</u>: The Contractor shall procure, at its sole cost and expense, and shall maintain in force at all times during the term of this Agreement, policies of insurance as herein below set forth, written by companies with an A.M. Best Company rating of A- or better and approved by the LIRR/MTA. The Contractor shall deliver to the LIRR/MTA evidence of such policies. These policies must: (i) be written in accordance with the requirements of the

paragraphs below, as applicable; (ii) be endorsed in form acceptable to the LIRR/MTA to include a provision that the policy will not be canceled, materially changed, or not renewed without at least thirty (30) days prior written notice to the LIRR, Attention: Carol Berlingieri, MTA Risk and Insurance Management, Long Island Rail Road, 2 Broadway, New York, New York 10004, Telephone No. (646) 252-1429, by certified mail/return receipt requested; and (iii) state or be endorsed to provide that the coverage afforded under the policies shall apply on a primary and not on an excess or contributing basis with any policies which may be available to the LIRR/MTA. Except as otherwise provided herein, policies written on a "claims-made" basis are not acceptable. At least two (2) weeks prior to the expiration of the policies, evidence of renewal or replacement policies of insurance, with terms and limits no less favorable than the expiring policies, shall be delivered to the LIRR/MTA. Deductibles or self-insured retentions above those shown on Schedule "A" will require approval from the LIRR/MTA. The Contractor shall be responsible for all claim expense and loss payments within the deductible or self-insured retention.

(1) Commercial General Liability Insurance (I.S.O. Form CG 00 01 01 96 or equivalent approved by the Railroad) in the Contractor's name with limits of liability in the amount of shown on Schedule "A" on a combined single limit basis for injuries to persons (including death) and for damage to property. If the policy is subject to an aggregate limit, replacement insurance will be required if it is likely such aggregate will be exceeded.

Such policies shall include:

(a) Contractual coverage for liability assumed by the Contractor;
(b) "XCU" coverage (Explosion, Collapse, and Underground Hazards) where necessary;
(c) Products-Completed Operations Coverage;
(d) Independent Contractors Coverage;
(e) Coverage for claims for bodily injury asserted by an employee of an additional insured and any Employer Liability Exclusion which may otherwise operate to exclude such coverage shall be voided in this respect; and,
(f) Additional Insured Endorsement (latest I.S.O. Form CG 20 10 or equivalent approved by the Railroad) naming Long Island Rail Road and Metropolitan Transportation Authority (LIRR/MTA) including its subsidiaries and affiliates, City of New York and New York City Department of Design and Construction.

(2) Worker's Compensation Insurance (including Employer's Liability Insurance) meeting the statutory limits of New York State.

(3) An Automobile Liability Insurance Policy (I.S.O. Form CA 00 01 07 97 or equivalent approved by the Railroad) in Contractor's name with the Long Island Rail Road (LIRR), Metropolitan Transportation Authority (MTA), its subsidiaries and affiliated companies, the City of New York and all other indemnified parties included in the contract as Additional Insured with limits of liability in the amount of shown on Schedule "A" for claims for bodily injuries (including death) to persons and for damage to property arising out of the ownership, maintenance or use of any owned, hired or non-owned motor vehicle. The policy shall be extended to include employees of any insured acting in the scope of their employment. If the policy is subject to an aggregate limit, replacement insurance will be required if it is likely such aggregate will be exceeded.

(4) Railroad Protective Liability Insurance (ISO-RIMA or equivalent form approved by the Railroad), covering the work to be performed at the designated job site and affording protection for damages arising out of bodily injuries or death, injury to or destruction of property, including damage to the insureds own property and conforming to the following:

(a) The Long Island Rail Road Company and Metropolitan Transportation Authority are the "Named Insureds."
(b) The limit of liability shall be as shown on Schedule "A". If policy is subject to an aggregate limit, replacement insurance will be required if it is likely such aggregate will be exceeded.

(c) Evidence of Railroad Protective Liability Insurance, must be provided in the form of the original Policy or a detailed Binder pending issuance of the original Policy.
(d) Definition of "Physical Damage to Property" must be amended to mean direct and accidental loss of or damage to "all property of any Named Insured and all property in any Named Insured's care, custody or control".

(b) The Contractor shall furnish evidence of all policies, before any work is started, to:

Carol Berlingieri
MTA Risk and Insurance Management
Long Island Rail Road
2 Broadway
New York, New York 10004
Telephone No. (646) 252-1429

(c) Certificates of Insurance may be supplied as evidence of policies in paragraph numbers (1), (2), and (3) above, however, if requested by the Agency, the Contractor shall deliver to the Agency, within forty-five (45) days of the request, a copy of such policies, certified by the insurance carrier as being true and complete.

If a Certificate of Insurance is submitted it must:
(A) Be provided on the Long Island Rail Road Certificate of Insurance Form (see Schedule "A");
(B) Be signed by an authorized representative of the insurance carrier or producer and notarized;
(C) Disclose any deductible, self-insured retention, aggregate limit or any exclusions to the policy that materially change the coverage;
(D) Indicate the Additional Insureds and Named Insureds as required herein;
(E) Reference the Contract by number on the face of the certificate; and,
(F) Expressly reference the inclusion of all required endorsements.

(d) Evidence of policy in paragraph number (4) above, Railroad Protective Liability Insurance, requires submittal of the original Policy. The original Binder will be accepted pending issuance of the original policy. Railroad Protective Liability Insurance cannot be submitted on insurance certificate forms. It must be provided as follows:

(A) A detailed Binder, pending issuance of the actual policy, or the actual policy itself;
(B) Named Insureds: Long Island Rail Road/Metropolitan Transportation Authority;
(C) "Physical Damage to Property" definition must be amended as stated above in requirements.

(e) If, at any time during the period of this Agreement, insurance as required is not in effect, or proof thereof is not provided to the LIRR/MTA, the LIRR/MTA shall have the option to: (i) direct the Contractor to suspend work with no additional cost or extension of time due on account thereof, or (ii) treat such failure as an Event of Default.

1.06.24B LIRR MINIMUM JACKING REQUIREMENTS FOR UNDERGROUND UTILITIES

The Contractor's attention is directed to the **Long Island Rail Road MINIMUM JACKING REQUIREMENTS FOR UNDERGROUND UTILITIES; and, drawing titled "MINIMUM ROADWAY CLEARANCE"**, (three (3) pages) that are attached to the end of this addendum.

(6) **Refer** to **Subsection 1.06.29 - Contractor To Provide For Traffic**, Page I-15:
Add the following to **Subsection 1.06.29**:

(1) Traffic Stipulations:

The Contractor shall refer to the Traffic Stipulations (two (2) pages) that are attached to the end of this addendum, and as directed by the Engineer.

(7) **Refer** to **Section 1.08 - Miscellaneous Provisions**, Page I-19:
Delete **Subsection 1.08.2 - Vendors** in its entirety:
Substitute the following new **Subsection 1.08.2**:

1.08.2 VENDORS

Prior to starting work, the Contractor shall submit in writing to the Engineer the names of all vendors and manufacturers the Contractor intends to use. Unless otherwise specified in the contract documents or a written exception is granted by NYCDDC, the Contractor shall submit only one (1) vendor or manufacturer for each product that is to be incorporated in the contract. The use of multiple vendors or manufacturers to supply the same product will be prohibited, unless otherwise specified in the contract documents or a written exception is granted by NYCDDC. If the vendor or manufacturer is not approved, the Contractor will be notified to either submit another vendor or manufacturer, or have their proposed vendor or manufacturer submit a request for approval from NYCDDC. The Contractor will be prohibited from using the vendor or manufacturer until approval of the vendor or manufacturer has been acquired from NYCDDC.

(8) **Refer** to **Section 1.08 - Miscellaneous Provisions**, Page I-20:
Add the following new **Subsection 1.08.7**:

1.08.7 SUBMITTAL OF SCHEDULE LOG

The Contractor's attention is directed to **Article 9 - Progress Schedule** of the Contract. The Contractor shall submit along with the proposed progress schedule the following: A schedule log in Excel Format (tied to the proposed progress schedule) indicating a description of and the schedule submission dates for all required submittals, shop drawings, approval requests, design mixes, reports, samples, etc., as required by the specifications and the terms of the contract.

(9) **Refer** to **Section 2.15 - Concrete**, **Subsection 2.15.3 - Modifications**, Page II-11:
Delete from **Subsection 2.15.3**, **Reference Number D 3.2.1** together with its paragraphs in their entirety:
Substitute the following:

D 3.2.1 DELETE 3.2.1 to 3.2.9 of GS11 and SUBSTITUTE the following:

All concrete mix designs shall be subject to approval by DDC's Quality Assurance and Construction Safety (QACS) Bureau and in accordance with their "MIX DESIGN, LABORATORY AND PLANT APPROVAL PROTOCOL". Copies of this protocol may be obtained at the preconstruction meeting or from the Engineer. Before the Contractor begins to manufacture concrete, the Contractor shall secure DDC's QACS approval of the mix design the Contractor proposes to use.

The Contractor shall submit for this purpose a statement, in writing, of the sources of all ingredient materials, the type and brand of the cement and the number of pounds of each of the materials in a saturated surface-dry condition making up one (1) cubic yard of concrete. The range of water-cement ratios within which the concrete will be manufactured and the method of mixing to be employed shall also be stated. The mix design submittal shall include gradation of aggregates, specific gravities of ingredients, unit weight, mix proportion for each batch (a minimum of four (4) batches except in case of precast plants where one specific mix may be proposed), compressive strength test results for each mix at 7-days, 28-days (high-early strength mixes may require 6-hours,

24-hours, 3-days and shrinkage test as per the requirements), and graphical representation of strength vs. W/C projected in hours/days.

The Contractor may submit for approval concrete mixes that (within one (1) year of the contract) have been previously approved and used on other jobs with any Bureau of the Department of Environmental Protection or the Department of Design and Construction. Such submittals shall contain evidence that the concrete mix was approved within one (1) year of this contract and shall show that the concrete will be produced at the same mix plant, that the cement and admixtures are the same type (though not necessarily the same brand), that the water/cement ratio is the same and that adjustments have been made in the mix for air content, specific gravity and gradation of the aggregates.

If the Contractor elects to submit a concrete mix that was not previously approved, the Contractor shall submit the new concrete mix in accordance with Chapters 2 and 3 of General Specification 11 as modified herein.

(10)<u>**Refer**</u> to **Section 2.15 - Concrete**, **Subsection 2.15.3 - Modifications**, Page II-13:
<u>**Add**</u> to **Subsection 2.15.3**, before **Reference Number D 8.2** the following:

D 7.3.3 <u>ADD</u> the following to Subsection 7.3.3 of GS11:

Each Portland cement concrete batching plant shall be subject to approval by DDC's Quality Assurance and Construction Safety (QACS) Bureau and in accordance with their "MIX DESIGN, LABORATORY AND PLANT APPROVAL PROTOCOL". Copies of this protocol may be obtained at the preconstruction meeting or from the Engineer. The minimum requirement for approval is that the proposed Portland cement concrete batching plant must be on the New York State Department of Transportation (NYSDOT) approved list for the current construction season.

The minimum requirement for approval of a precast concrete plant is that the proposed plant must be on the NYSDOT approved list. A waiver for this requirement may be granted by the DDC's Quality Assurance and Construction Safety (QACS) Director for special products that no NYSDOT approved plant is capable of producing.

Each Portland cement concrete batching plant shall also be subject to auditing and approval of the DDC's Director of Quality Assurance and Construction Safety (QACS). The Director of QACS may at any time discontinue the use of any previously approved equipment if nonconformance with the specifications results during the progress of the work. When the Director of QACS discontinues the use of the plant, production will not be acceptable for Department work until corrective measures satisfactory to the Director are carried out.

(11)<u>**Refer**</u> to **Section 2.15 - Concrete**, **Subsection 2.15.3 - Modifications**, Page II-14:
<u>**Delete**</u> from **Subsection 2.15.3**, **Reference Number D 16.3** together with its paragraphs in their entirety:
<u>**Substitute**</u> the following:

D 16.3 Testing Service - <u>ADD</u> the following:

The Contractor shall retain the services of an independent testing laboratory to provide for the services outlined in 16.3.1.4 to 16.3.1.11 of GS11, with the exception of those tests specified herein to be performed by the Engineer and the City Retained Laboratory.

All laboratories shall be subject to approval by DDC's Quality Assurance and Construction Safety (QACS) Bureau and in accordance with their "MIX DESIGN, LABORATORY AND PLANT APPROVAL PROTOCOL". Copies of this protocol may be obtained at the pre-

construction meeting or from the Engineer. The minimum requirement for approval is that the laboratory must have the current AMRL/AASHTO R-18 accreditation in the category of service proposed and must be currently licensed by the NYC Department of Buildings (DOB).

(12)Refer to **Section 2.15 - Concrete**, **Subsection 2.15.3 - Modifications**, Page II-14:
Delete from **Subsection 2.15.3**, **Reference Number D 16.8** together with its paragraphs in their entirety:
Substitute the following:

D 16.8 Responsibilities and Duties of Contractor - ADD the following:

The Contractor may, if the Contractor so desires, take cylinders corresponding to those taken by the Engineer for the City Retained Laboratory. However, determination of payment will be based solely on the cylinders taken by the Engineer for the City Retained Laboratory.

CONCRETE TEST CYLINDERS

The Contractor will be responsible for safe delivery of concrete cylinders to the Department of Design and Construction Laboratory, within two (2) days after molding, where they will be properly stored and cured until the date of test, and tested by others, upon removal from the curing room. The Department of Design and Construction testing laboratory will provide the services for the curing and breaking of the test cylinders.

The Contractor shall provide empty cylinder molds and facilities for the proper care of these cylinders while on the site, and shall safeguard them against injury and protect them from the elements.

The Engineer will be responsible for the preparation, documentation and labeling of the cylinders and for notifying the Contractor, at least twenty-four (24) hours in advance, when a shipment of cylinders is ready for delivery, so that cylinders can be tested for the standard twenty-eight (28) day and seven (7) day tests. Cylinders are to be delivered by the Contractor to a designated area near 30-30 Thomson Avenue, Long Island City, New York, or where otherwise directed within the City of New York.

The Contractor shall make arrangements to protect all cylinders from damage during loading, transport to, and unloading at a Department of Design and Construction designated testing laboratory, and shall obtain a receipt for delivered cylinders, which shall be submitted to the Engineer.

(13)Refer to **Section 4.06 - Backfilling**, **Subsection 4.06.3 - Method Of Depositing All Backfill**, Page IV-18:

(A) Add the following paragraph to beginning of **Subsection 4.06.3**:

At the preconstruction meeting, the Contractor shall submit for approval a full description of the Contractor's proposed methods to be used for all backfilling operations including, but not limited to, equipment, backfill material, depth of compaction layers, and trench locations where each is to be employed. In the field, the Contractor shall be required to demonstrate that the Contractor's methods of backfilling and compaction shall obtain a minimum of ninety-five (95) percent of Standard Proctor Maximum Dry Density.

(B) Delete from **Subsection 4.06.3**, the fourth paragraph in its entirety:
Substitute the following:

Unless otherwise approved in writing by the Engineer, backfilling of the remainder of the trenches and excavations from a point not less than twelve (12) inches above the top of the barrel of the water main pipe to the underside of the pavement shall be progressively deposited in uniform and successive horizontal layers not exceeding twelve (12) inches in depth for the entire width of the trench or excavation and each successive layer shall be solidly compacted by mechanical tamping or other approved means so as to achieve the required density. In deep trenches defined as those requiring sheeting, the Contractor may submit to the Engineer, for approval, an alternate backfill method (i.e. jetting, deeper deposited layers not exceeding twenty-four (24) inches, etc.) for depositing and compacting the backfill from twelve (12) inches above the top of the barrel of the water main pipe to a plane five (5) feet below final surface elevation. However, approval of any alternate backfill method shall not relieve the Contractor from obtaining a minimum of ninety-five (95) percent of Standard Proctor Maximum Dry Density. Should the Engineer determine that the specified density is not being obtained, the area must be re-excavated and backfilled at the Contractor's own cost until the required compaction density is achieved.

(C) **Delete** from **Subsection 4.06.3**, the seventh paragraph in its entirety:
Substitute the following:

Backfill shall proceed simultaneously with the withdrawal of sheeting but at no time shall the withdrawal of sheeting exceed a height of six (6) inches above the deposited backfill. Withdrawal of sheeting below levels previously backfilled and compacted is prohibited.

(14) **Refer** to **Section 5.02 - Laying Ductile Iron Pipe And Fittings**, **Subsection 5.02.3(F) - Bedding And Foundation Of Pipes**, Page V-8:
Delete from **Subsection 5.02.3(F)**, Paragraph (5) - Pier And Plate, in its entirety:
Substitute the following new Paragraph (5):

(5) Shallow Cover: Where mains 24-inches and smaller are laid with covers of 2'-0" or less, the Contractor shall provide protection in accordance with **Standard Drawing No. 42063-Y** or as directed by the Engineer.

Where mains 24-inches and smaller are laid with covers between 2'-6" and 2'-0", the Contractor shall provide steel plates only over the main with dimensions as shown on **Standard Drawing No. 46464-Z** or as directed by the Engineer.

Where mains 30-inches and larger are laid with covers of 2'-6" or less, the Contractor shall provide protection in accordance with **Standard Drawing No. 46464-Z** or as directed by the Engineer.

Covers over the new mains shall not be less than 1'-6".

(15) **Refer** to **Section 5.02 - Laying Ductile Iron Pipe And Fittings**, **Subsection 5.02.3 - Construction Methods**, **Paragraph (M) - Laying Temporary Connections**, Page V-12:
Delete **Paragraph (M)**, in its entirety:
Substitute the following:

(M) LAYING TEMPORARY CONNECTIONS AND INSTALLING TEMPORARY CAP ASSEMBLIES AND/OR BULKHEADS

(1) When new water mains are laid and it becomes necessary to provide a temporary connection between the existing main and new mains laid under this contract (regardless of whether the new and existing water mains are in the same trench or are offset in two different trenches), the Contractor shall, if ordered, provide all labor, equipment and facilities for laying, maintaining and removing when directed, temporary connections and appurtenances. If City forces do laying of temporary connections, the Contractor shall make all required equipment and facilities available to

them. No payment will be made for providing temporary house services which may be required when making a temporary connection between the existing and new main.

(2) (a) Temporary cap assemblies on distribution water mains (20" and less in diameter) shall consist of a 2-foot long spigot/spigot ductile iron pipe with a mechanical joint cap restrained to the pipe with a "wedge-type" retainer gland and a minimum 2-inch tap on the pipe section.

(b) Temporary cap assemblies on distribution water mains (20" and less in diameter) shall be restrained and braced in a manner sufficient to support system working pressures, and thrust forces.

(c) The 2-inch tap required as part of the temporary cap assembly is to be utilized to allow air to escape while filling the main in addition to allow for proper flushing of the main.

(d) Restraint and bracing as well as temporary cap assemblies/bulkheads for water mains greater than 20" in diameter shall be submitted for approval by the Engineer prior to being utilized.

(16)<u>Refer</u> to **Section 5.02 - Laying Ductile Iron Pipe And Fittings**, **Subsection 5.02.5 - Price To Cover**, **Paragraph (10)**, Page V-16:
<u>Delete</u> **Paragraph (10)**, in its entirety:
<u>Substitute</u> the following:

(10)(a) No separate or additional payment will be made to the Contractor for furnishing, delivering, installing, restraining, bracing and removing temporary cap assemblies/bulkheads for water mains as ordered by the Engineer. The costs thereof shall be deemed included in the unit prices bid for all items of the contract.

(b) Payment for temporary valves (i.e. construction valves) and its associated fittings ordered by the Engineer during the course of the work to be installed will be paid for at the same rates as for valves and fittings permanently installed.

(c) If ordered by the Engineer, removal of valves (i.e. construction valves) and its associated fittings, including their transfer and disposal shall be deemed included in the prices bid for all items of the contract. No separate or additional payment will be made for this work.

(d) Payment For Temporary Connections: When new mains are laid and it becomes necessary to provide a temporary connection between the existing and new mains the following method of payment shall apply: The Contractor shall be paid once for furnishing and delivering pipes and fittings used in temporary connections. The Contractor shall also be paid for laying the temporary pipe connection and fitting using the appropriate pipe laying item for each time that the Contractor is directed to use them throughout the project as directed by the Engineer.

(17)<u>Refer</u> to **Subsection 5.04.4 - Furnishing, Delivering And Installing Steel Tee**, Paragraph (5), Item Numbers list, Page V-23:
<u>Delete</u> Item No. "60.23ST20T48", together with Description "FURNISHING, DELIVERING AND INSTALLING 48-INCH X 20-INCH STEEL TEE", and Pay Unit "EACH":

(18)<u>Refer</u> to **Section 5.05 - Furnishing And Delivering Gate Valves**, Page V-35:

(A) <u>Delete</u> from **Subsection 5.05.1 - Description**, the first paragraph in its entirety:
<u>Substitute</u> the following:

This specification describes furnishing and delivering of double disc 3-inch to 20-inch gate valves, resilient seated 3-inch to 20-inch gate valves and resilient seated 3-inch to 12-inch tapping valves.

Unless otherwise specified in the contract documents or ordered in writing by the Engineer, only resilient seated gate valves and tapping valves shall be furnished and delivered by the Contractor on the contract.

(B) **Delete** from **Subsection 5.05.2 - Materials**, second paragraph, first line, the words, "6-inch hydrant":
Substitute the following words, "3-inch to 20-inch":

(19) **Refer** to **Section 5.06 - Setting Gate Valves**, Page V-38:

(A) **Delete** from **Subsection 5.06.1 - Description**, the first paragraph in its entirety:
Substitute the following:

This specification describes the installation of double disc 3-inch to 20-inch gate valves, resilient seated 3-inch to 20-inch gate valves and resilient seated 3-inch to 12-inch tapping valves. It also describes the installing of manhole frames (skirts and heads) and covers.

Unless otherwise specified in the contract documents or ordered in writing by the Engineer, only resilient seated gate valves and tapping valves shall be installed by the Contractor on the contract.

(B) **Delete** from **Subsection 5.06.2 - Materials**, second paragraph, first line, the words, "6-inch hydrant":
Substitute the following words, "3-inch to 20-inch":

(20) **Refer** to **Section 5.23 - Decking**, **Subsection 5.23.1 - Description**, Page V-73:
Delete from **Subsection 5.23.1**, the third paragraph in its entirety:
Substitute the following:

Steel plates that are resting on pavement, that are not part of a decking system, and are used to temporarily span trenches and excavations for vehicular traffic and for pedestrian crossings and walkways shall not be included for payment under this decking section. The cost of all labor, materials, equipment, insurance and incidentals necessary to furnish, place, anchor and ramp these temporary steel plates, when and where directed, in order to comply with the requirements of the NYCDOT Office of Construction Mitigation and Coordination (OCMC) traffic stipulations, the directions of the Engineer, and the Contractor's construction operations shall be deemed included in the prices bid for all contract items of work.

(21) **Refer** to **Section 5.23 - Decking**, **Subsection 5.23.4 - Design Criteria**, Page V-74:
Add the following to **Subsection 5.23.4**:

(C) The Contractor may substitute skid resistant steel plates (Non-Skid Textured Plates) for timber mats, subject to approval in accordance with **Subsection 4.05.5**. These steel plates shall be placed flush with the existing roadway and shall be installed in compliance with the requirements of **Subsection 4.05.6(G)**.

(22) **Refer** to **Subsection 5.32.4 - Specific Pavement Restoration Provisions**, Page V-101:
Add the following to **Subsection 5.32.4**:

(E) Specific Pavement Restoration Provisions:

(1) In the north side of 54th Street from a point approximately 322-feet west of the west building line of Flushing Avenue to a point approximately 352-feet west of the west building line of Flushing Avenue; in the south side of 54th Street from a point approximately 324-feet west of the west building line of Flushing Avenue to a point approximately 354-feet west of the west

building line of flushing Avenue; in the north side of 54th Street from a point approximately 853-feet east of the east building line of Grand Avenue to a point approximately 868-feet east of the east building line of Grand Avenue; and, in the south side of 54th Street from a point approximately 849-feet east of the east building line of Grand Avenue to a point approximately 864-feet east of the east building line of Grand Avenue, the restoration shall be as follows:

(a) The existing roadway shall be removed from **curb to curb** or **edge to edge** and the entire area shall receive a permanent pavement restoration that shall consist of a top course of three (3) inches of Asphaltic Concrete Wearing Course on a base course of nine (9) inches of concrete, as directed by the Engineer. New curbs and sidewalks shall be constructed where and as directed by the Engineer.

(2) In all other street areas the restoration shall be as follows:

(a) The permanent restoration over the **trench width and cutbacks only** shall consist of a top course of a minimum of three (3) inches of binder mixture on a base course of a minimum of six (6) inches of concrete, to match the existing pavement as directed by the Engineer.

(b) Finally an overlay of two (2) inches of asphaltic concrete wearing course shall be installed over the entire width of the roadway from **curb to curb** or **edge to edge** of existing roadway.

(3) The following requirements shall apply:

(a) Before the top course is installed, an additional width of asphalt beyond the edge of new base course shall be saw-cut and removed from all edges of trenches to a depth to accommodate the specified top course and the entire area restored. This additional removal shall be in accordance with paragraph (b) below.

(b) Pavement excavation along with saw cutting of pavements for sewer and water main trenches shall be in accordance with **Section 5.30 - Pavement Excavation** of both the Standard Sewer Specifications and the Standard Water Main Specification.

(c) At locations requiring the installation of a concrete base course, a reflective cracking membrane shall be installed over joints prior to restoration, the cost of which shall be deemed included in the prices bid for all pavement restoration items. Additionally, appropriate pavement keys as described below shall be used.

(d) Pavement keys **Type B-1** shall be used to insure a desired four (4) inch curb reveal (two and one-half (2-1/2) inch absolute minimum). Pavement key **Type A** shall be used in all intersections. Both keys are to be per Bureau of Highways Operations Specifications and Standard Details of Construction.

(e) Unless otherwise specified, the cost for tack coating, eradication of temporary roadway markings, stripping or milling of pavement keys and adjustment of city-owned castings shall be deemed included in the prices bid for all pavement restoration items.

(f) Payment for placement of temporary pavement marking shall be made under Item No. 6.49 - TEMPORARY PAVEMENT MARKINGS (4" WIDE).

(g) Payment for removal of existing pavement markings shall be made under Item No. 6.53 - REMOVE EXISTING LANE MARKINGS (4"WIDE).

(h) Payment for removal and permanent placement of pavement marking with thermoplastic reflectorized pavement markings (crosswalk and lane dividers) shall be

made under Item No. 6.44 - THERMOPLASTIC REFLECTORIZED PAVEMENT MARKINGS (4" WIDE).

(i) Payment for pavement restoration shall be made under the following items:

Item No.	Item	Payment Description
4.02 AF-R	Asphaltic Concrete Wearing Course, 2" Thick	(For 2" asphaltic concrete wearing course over trenches and cutbacks.)
4.02 AG	Asphaltic Concrete Wearing Course, 3" Thick	(For asphaltic concrete wearing course for entire width of roadway restoration.)
4.02 CA	Binder Mixture	(For binder mixture top course when overlay is required; binder mixture in Type A and B Keys; and binder mixture to fill in roadway depressions and to provide a leveling course prior to overlay where ordered.)
4.04 B	Concrete Base For Pavement, Variable Thickness For Trench Restoration, Class B-32	(For concrete base course over trenches and cutbacks.)
4.04 DC	Concrete Base For Pavement, 9" Thick, Class B-32	(For concrete base course for entire width of roadway restoration.)

(23)<u>**Refer**</u> to **Section 5.36 - Additional Earth Excavation Including Test Pits, Subsection 5.36.4 - Price To Cover**, Paragraph (3), fifth line, Page V-114:
<u>**Change**</u> 16", to 16'.

END OF ADDENDUM NO. 2
This Addendum consists of twenty-four (24) pages plus five (5) pages of attachments.

NEW YORK CITY

Department of Transportation

JANETTE SADIK-KHAN, Commissioner

OCMC TRAFFIC STIPULATIONS

December 10, 2012

OCMC FILE NO: QEC 12-419
CONTRACT NO: QED 1008
PROJECT: WATER MAIN AND SANITARY SEWER CONNECTION

LOCATION(S): 54TH STREET BETWEEN FLUSHING AVENUE AND GRAND AVENUE

PERMISSION IS HEREBY GRANTED TO THE **NEW YORK CITY DEPARTMENT OF DESIGN AND CONSTRUCTION** AND ITS DULY AUTHORIZED AGENT, TO ENTER UPON AND RESTRICT THE FLOW OF TRAFFIC AT THE ABOVE LOCATION AND ITS LOCAL ADJACENT STREETS FOR THE PURPOSE OF CARRYING OUT THE ABOVE NOTED PROJECT, SUBJECT TO THE STIPULATIONS, AS NOTED BELOW:

A. SPECIAL STIPULATIONS

1. **EMBARGOES** – A CONSTRUCTION EMBARGO WILL APPLY TO THOSE LOCATIONS BELOW WHICH FALL WITHIN THE **HOLIDAY EMBARGO** OR ANY OTHER SPECIAL EVENT EMBARGOES SUCH AS PUBLISHED BY THE BUREAU OF PERMIT MANAGEMENT AND CONSTRUCTION CONTROL.
2. **BIKE LANES** – IF WORK IS IN OR AFFECTING A BIKE LANE, THE CONTRACTOR MUST POST ADVANCE WARNING SIGNS 350 FEET AND 200 FEET PRIOR TO THE WORK ZONE STATING **"CONSTRUCTION IN BIKE LANE AHEAD PROCEED WITH CAUTION"**, AND ALSO POST A SIGN AT THE WORK ZONE STATING **"CONSTRUCTION IN BIKE LANE PROCEED WITH CAUTION"**. SUCH SIGNS SHALL BE ORANGE, 3' X 3', DIAMOND-SHAPED WITH 4" BLACK LETTERING. SIGNS SHALL BE POSTED IN ACCORDANCE WITH THE FEDERAL MANUAL ON UNIFORM TRAFFIC CONTROL DEVICES (MUTCD).
3. **BUS STOPS** – THE CONTRACTOR SHALL PROVIDE WRITTEN NOTICE TO NYC DOT OCMC AND NEW YORK CITY TRANSIT (NYCT) A MINIMUM OF FIVE (5) WEEKS IN ADVANCE FOR LANE/STREET CLOSURES THAT AFFECT BUS ROUTES/BUS STOPS.
4. **METERS** – THE CONTRACTOR MAY NOT REMOVE OR RELOCATE PARKING METERS WITHOUT FIRST OBTAINING APPROVAL FROM NYCDOT PARKING METER DIVISION AT 718 – 894 – 8651.
5. **ACCESS TO ABUTTING PROPERTIES** – THE CONTRACTOR SHALL COORDINATE ALL ACTIVITIES WITH ABUTTING PROPERTY OWNERS TO ENSURE ACCESS IS PROVIDED TO/FROM ENTRANCES/DRIVEWAYS AT ALL TIMES.
6. **AUTHORIZED PARKING** – PRIOR TO PERFORMING WORK WHICH IMPACTS AUTHORIZED PARKING, THE CONTRACTOR SHALL SUBMIT IN WRITING, AND COPY OCMC-STREETS, A REQUEST TO OCCUPY SPACE CURRENTLY USED BY AUTHORIZED VEHICLES. APPROVAL MUST BE RECEIVED FROM AUTHORIZED PARKING PRIOR TO OCCUPYING THESE AREAS.
7. **NOTIFICATION** – THE CONTRACTOR MUST AT LEAST TWO (2) WORKING DAYS BEFORE THE START OF CONSTRUCTION NOTIFY THE NYC FIRE DEPARTMENT, NYC POLICE DEPARTMENT, NYCEMS, LOCAL COMMUNITY BOARD, BOROUGH PRESIDENT'S OFFICE-CHIEF ENGINEER, NYCDOT OCMC OFFICE, AND ALL ABUTTING PROPERTY OWNERS.
8. **ENHANCED MITIGATIONS**
   - "NO STANDING ANYTIME-TEMPORARY CONSTRUCTION" SIGNS AND TEMPORARY PAVEMENT MARKINGS SHALL BE INSTALLED AND MAINTAINED AS WARRANTED BY THE MAINTENANCE AND PROTECTION OF TRAFFIC (MPT) REQUIRED TO FACILITATE TRAFFIC MOVEMENTS THROUGH THE WORK ZONE. ALL TEMPORARY SIGNS AND PAVEMENT MARKINGS SHALL BE REMOVED UPON COMPLETION OF THE PROJECT.
   - COMMUNITY OUTREACH SHALL BE PROVIDED FOR THE DURATION OF THE PROJECT.

B. MAINTENANCE AND PROTECTION OF TRAFFIC

1. **54TH STREET BETWEEN FLUSHING AVENUE AND GRAND AVENUE**
   - Work hours shall be as follows: 9:00 AM to 4:00 PM, Monday thru Friday
     8:00 AM to 4:00 PM, Saturday
   - The contractor shall maintain one 12 foot lane for local and emergency traffic during working hours.
   - The contractor shall restore all travel lanes after working hours.
   - The contractor shall maintain 5-foot clear sidewalk for pedestrians at all times.
   - The contractor shall not interfere with the right of way of the Rail Road without written approval from proper authority.

NYC Department of Transportation
reau of Permit Management and Construction Control
Water Street - 7th Floor, New York, NY 10041
T: 212.839.9621 F: 212.839.8970
www.nyc.gov/dot

OCMC FILE NO: QEC 12-419
CONTRACT NO: QED 1008
PROJECT: WATER MAIN AND SANITARY SEWER CONNECTION

C. GENERAL NOTES

1. **THIS IS NOT A PERMIT**. THIS STIPULATION SHEET MUST BE SUBMITTED WITH ALL REQUESTS FOR PERMITS PERTAINING TO THE ABOVE CONTRACT AND PRESENT AT THE WORK SITE ALONG WITH ALL ACTIVE CONSTRUCTION PERMITS WHEN THE APPROVED WORK IS BEING PERFORMED.
2. ALL RELOCATION WORK BY THE UTILITIES SUCH AS; CON EDISON, TELEPHONE, GAS AND CABLE COMPANIES SHALL PRECEDE THE CONTRACTORS' START OF WORK ON ALL AFFECTED ROADWAYS IN THE IMPACTED CONTRACT AREA.
3. THE CONTRACTOR IS ADVISED THAT OTHER CONTRACTORS MAY BE WORKING IN THE GENERAL AREA DURING THE TERM OF THIS STIPULATION. IN WHICH EVENT, THE CONTRACTOR MAY REQUIRE MODIFICATIONS BY THE OCMC-STREETS.
4. THE PERMITTEE IS NOT AUTHORIZED TO ENTER, OCCUPY OR USE ANY PUBLICLY-OWNED OR PRIVATELY OWNED, NON-PAVED, LANDSCAPE OR NON-LANDSCAPED LOCATION WITHOUT SPECIFIC WRITTEN PERMISSION. WHEN THE LOCATION IS WITHIN THE RIGHT-OF-WAY OF A LIMITED-ACCESS ARTERIAL HIGHWAY, **WRITTEN** APPROVAL FROM THE NYCDOT OCMC-HIGHWAYS IS REQUIRED. WHEN THE LOCATION IS WITHIN THE RIGHT-OF-WAY OF A PUBLIC STREET OR PUBLIC PARK, **WRITTEN** APPROVAL FROM THE NEW YORK CITY DEPARTMENT OF TRANSPORTATION OR NEW YORK CITY DEPARTMENT OF PARKS AND RECREATION IS REQUIRED. WHEN THE LOCATION IS WITHIN THE RIGHT-OF-WAY OF ANY OTHER JURISDICTION SUCH AS PRIVATE PROPERTY, STATE, FEDERAL ETC., IT IS THE PERMITTEE'S RESPONSIBILITY TO DETERMINE THE PROPERTY OWNER AND OBTAIN THE WRITTEN APPROVAL.
5. THE PERMITTEE SHALL ADHERE TO THE NYCDOT BUREAU OF BRIDGES' SPECIAL PROVISIONS FOR LANDSCAPE PROTECTION, MAINTENANCE AND RESTORATION, ITEMS 1.18.15 THROUGH 1.18.19, WHENEVER AND WHEREVER ANY OF THE PERMITTEE'S ACTIVITIES OCCUR WITHIN A LIMITED ACCESS ARTERIAL HIGHWAY RIGHT - OF - WAY.
6. NO DEVIATION OR DEPARTURE FROM THESE STIPULATIONS WILL BE PERMITTED WITHOUT THE PRIOR WRITTEN APPROVAL FROM THE OCMC-STREETS. REQUEST FOR SUCH MODIFICATIONS SHALL BE SUBMITTED TO THE OFFICE OF THE OCMC-STREETS, NEW YORK CITY DEPARTMENT OF TRANSPORTATION, A MINIMUM OF TWENTY (20) DAYS IN ADVANCE FOR CONSIDERATION.
7. FOR THIS PROJECT THE CONTRACTOR SHALL FURNISH, INSTALL AND MAINTAIN ALL NECESSARY ADVANCE WARNING AND DETOUR SIGNS, TEMPORARY CONTROL DEVICES, BARRICADES, LIGHTS AND FLASHING ARROW BOARDS IN ACCORDANCE WITH THE "MANUAL ON UNIFORM TRAFFIC CONTROL DEVICES," THE TYPICAL SCHEMES INCLUDED IN THIS SPECIFICATION; AND AS ORDERED BY THE ENGINEER-IN-CHARGE AND THE OCMC-STREETS.
8. THE CONTRACTOR SHALL BE RESPONSIBLE FOR IDENTIFYING HIS CONSTRUCTION SIGNAGE. THE IDENTIFICATION SHALL INCLUDE THE CONTRACTOR'S NAME, SPONSORING AGENCY NAME AND THE CONTRACT NUMBER. THE IDENTIFICATION SHALL BE PLACED ON THE BACK OF THE SIGN. THE LETTERING SHALL BE THREE (3) INCHES HIGH.
9. THE OCMC-STREETS RESERVES THE RIGHT TO VOID OR MODIFY THESE STIPULATIONS SHOULD CONSTRUCTION FAIL TO COMMENCE WITHIN TWO (2) YEARS OF THE SIGNED DATE OF THESE STIPULATIONS.
10. THE CONTRACTOR MUST COMPLY WITH ALL CONSTRUCTION EMBARGOS ISSUED BY THE NYCDOT INCLUDING THE HOLIDAY EMBARGO.

JOSEPH P. NOTO
EXECUTIVE DIRECTOR
OCMC-STREETS

XIOMARA AGUILERA
PROJECT MANAGER
OCMC-STREETS

JPN/db

Long Island Rail Road

MINIMUM JACKING REQUIREMENTS FOR UNDERGROUND UTILITIES

All work must be in accordance with current American Railway Engineering Association (A.R.E.A.) specifications Part 5, Pipelines and as referenced below.

1. **All parties are notified that pipe jacking or directional boring under LIRR tracks without LIRR flagmen present is a violation of Federal Law.**

2. Jacking & Receiving Pits located on LIRR property- Details and calculations of the jacking and receiving pits, sheathing and bracing to be submitted to the LIRR for review. All details and calculations must include original seal and signature of a Licensed Professional Engineer, Licensed in the State of New York.
   Jacking & Receiving Pits located off of LIRR property- Details of the jacking and receiving pits, sheathing and bracing to be submitted to the LIRR for review. The utility and/or the contractor is responsible to assure the design of all sheathing and bracing complies with New York State Building codes and New York State Engineering Law.

3. The casing pipe shall not be less than 7'-0" from the base of the railroad tie to the top of the casing pipe at their closest point.

4. When the jacking operation is underway, the void from the soil material being removed shall not proceed in advance of the casing.

5. Once the jacking operation has commenced, the jacking procedure shall be carried on continuously until it is complete.

6. Open excavations on/or adjacent to the LIRR Right of Way (ROW) must be secured safely with fencing, barricades and flashing lights or other methods as deemed necessary by the LIRR.

7. The contractor must comply with all applicable maintenance and protection of traffic control standards during construction.

8. The contractor must keep the LIRR ROW clean of construction material, equipment and debris at all times.

9. The contractor shall satisfy LIRR insurance requirements prior to commencement of work. Further the contractor shall satisfy the requirements of Federal Law and LIRR requirements for Roadway Worker Protection training.

10. An Entry Permit or Force Account Agreement will be necessary to ensure the reimbursement of railroad costs associated with design review and construction monitoring.

11. **The LIRR must be given two (2) weeks notice prior to the commencement of work. No work shall be performed without a representative of the Long Island Rail Road Engineering Department and LIRR flagman being present. Contact Managing Engineer- 3rd Party Inspection at 718-558-3229 with two (2) week notification.**

12. **A utility markout must be performed by LIRR utility departments** and other agencies prior to any excavation on or adjacent to the LIRR Right of Way.

13. The cost incurred by the LIRR to correct settlement or upheaval of the railroad tracks resulting from jacking operations will be reimbursed to the LIRR directly by the permittee.

14. The cost incurred by the LIRR resulting from damage to LIRR facilities (grade crossing, overhead wires, signal systems, underground utilities, structures, etc) caused by jacking operations will be reimbursed to the LIRR directly by the permittee.

15. All references and notes to jacking operations shall also apply to directional boring operations.

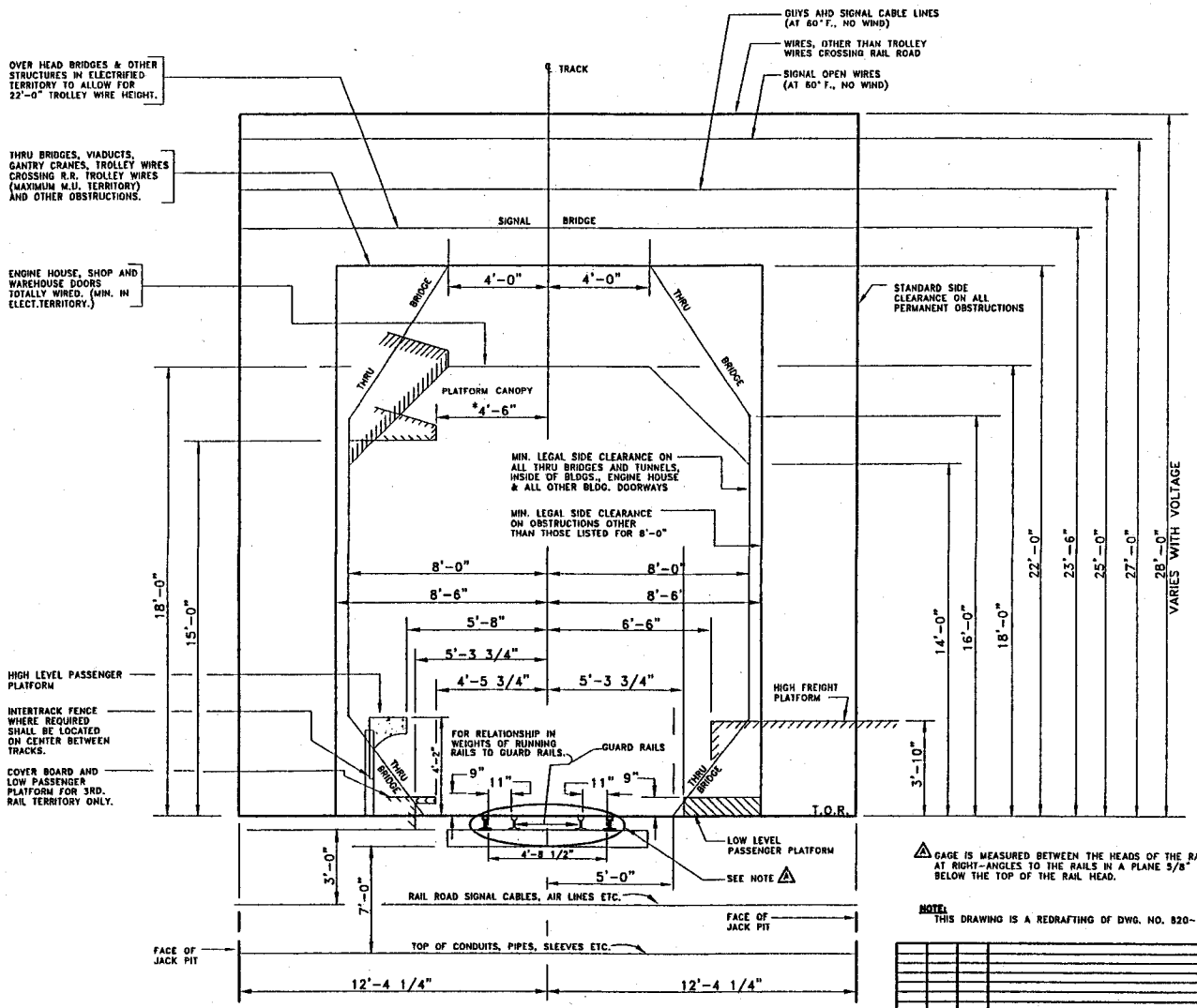

NOTES:

STRUCTURES MUST NOT BE LOCATED NEARER TO TRACK THAN THE MINIMUM CLEARANCE LIMITS PRESCRIBED BY THIS PLAN AND THESE DISTANCES SHOULD BE EXCEEDED WHERE POSSIBLE.

MINIMUM CLEARANCES:

FOR TANGENT TRACK SHALL BE SHOWN ON THIS PLAN.

FOR CURVED TRACK

ABOVE TOP OF RAIL — ARE THE SAME AS SHOWN FOR TANGENT TRACK MEASURED VERTICALLY FROM TOP OF HIGH RAIL. EXCEPT PASSENGER AND FREIGHT PLATFORMS. THE HEIGHT OF WHICH SHALL BE MEASURED FROM TOP OF NEAREST RAIL.

SIDE CLEARANCE (MEASURED RADIALLY)

OUTSIDE: ON THE OUTSIDE OF CURVED TRACK. SIDE CLEARANCES SHALL BE MEASURED HORIZONTALLY FROM THE GAGE OF NEAREST RAIL AND BE INCREASED BY 1 INCH PER DEGREE OF CURVATURE; OVER THAT SHOWN FOR TANGENT TRACK.

INSIDE: ON THE INSIDE OF CURVED TRACK SIDE CLEARANCES SHALL BE MEASURED HORIZONTALLY FROM THE GAGE OF NEAREST RAIL AND BE INCREASED BY 1 INCH PER DEGREE OF CURVATURE, OVER THAT SHOWN FOR TANGENT TRACK TO WHICH MUST ALSO BE ADDED TO THE AMOUNT OF SUPER ELEVATION OF THE HIGH RAIL ABOVE THE LOW RAIL.

CLEARANCE REQUIREMENTS SET FORTH ON THIS PLAN SHALL APPLY ONLY TO NEW CONSTRUCTION OR RECONSTRUCTION. STRUCTURES AND TRACKS CONSTRUCTED PRIOR TO APRIL 1st 1961. MAY BE MAINTAINED AND EXTENDED AT THE EXISTING CLEARANCE.

THE FOLLOWING SIDE CLEARANCE ARE INCLUDED IN SECTION 51-A OF THE RAIL ROAD LAW EFFECTIVE APRIL 1st 1961.

MIN. C TO C DISTANCE FOR PARALLEL MAIN TRACKS – 13'-6" C TO C
C TO C DISTANCE YARD AND SIDE TRACKS – 13'-6" C TO C
ALL TRACKS PARALLEL TO MAIN OR PASSING TRACKS – 15'-0" C TO C
LADDER TRACKS TO ADJACENT TRACKS – 16'-0" C TO C
PARALLEL LADDER TRACKS – 19'-0" C TO C
PARALLEL TEAM TRACKS AND HOUSE TRACKS – 13'-6" C TO C

* PLATFORM CANOPY CLEARANCE OF 4'-6" MAY BE USED ONLY IF RESTRICTIONS AGAINST RIDING ON THE SIDE OR TOP OF CARS AT THE LOCATION OF THE CANOPY ARE LISTED IN THE CURRENT TIME-TABLE UNDER SPECIAL INSTRUCTIONS.

PLOT SCALE: 1/4"=1'

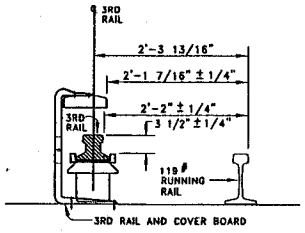

3 GAGE IS MEASURED BETWEEN THE HEADS OF THE RAILS AT RIGHT-ANGLES TO THE RAILS IN A PLANE 5/8" BELOW THE TOP OF THE RAIL HEAD.

NOTE: THIS DRAWING IS A REDRAFTING OF DWG. NO. 820-10. DATED: 6-30-72

Rev. No.	Drawn by	Ckd by	Description	Date
3	ALV	JE	REVISED DIMENSION AND DEFINED GAGE-3	
2	ALV	VP/VAM	REDRAFTED IN AUTOCAD FORMAT	1-26-99

LONG ISLAND RAIL ROAD

MINIMUM ROADWAY CLEARANCE

Drawing by: SEE NOTE	Drawn by: ALV	Drawing no: 820-10
Checked by: VAM/MP	Scale: NONE	Sheet no:
Approved by: FJS	Date: 1-26-99	CE-1

STANDARD

ATTACH TO CONTRACT DOCUMENTS

THE CITY OF NEW YORK
DEPARTMENT OF DESIGN AND CONSTRUCTION
INFRASTRUCTURE DIVISION
BUREAU OF DESIGN

PROJECT ID: QED1008

C FOR THE INSTALLATION OF 60-INCH AND 12-INCH WATER MAINS IN: 54TH STREET BETWEEN FLUSHING AVENUE AND GRAND AVENUE

Together With All Work Incidental Thereto
BOROUGH OF QUEENS

ADDENDUM NO. 3

DATED: February 20, 2013

This Addendum is issued for the purpose of amending the requirements of the Contract Documents and is hereby made part of said Contract Documents to the same extent as if it was originally included therein.

GAS COST SHARING (EP-7) STANDARD SPECIFICATIONS

EP-7 GAS COST SHARING
STANDARD SPECIFICATIONS

TABLE OF CONTENT

I - NOTICE TO ALL BIDDERS; GAS COST SHARING WORK

All prospective bidders are hereby advised that, pursuant to the "Gas Facility Cost Allocation Act", ("the Act"), the City of New York has entered into an agreement ("the Agreement") with the gas companies (Con Edison or National Grid (formerly KeySpan Energy Delivery)) operating in their respective areas of the City to "share" the cost of facility relocation and/or support and protection of facilities disturbed by proposed water and/or sewer and related City work specified in this contract. Therefore, bid items, specifications and estimated quantities for the incremental costs of support and protection of certain gas facilities have been included in this contract. The low bid for this contract shall be determined by examining each bid for all work to be performed under this contract including any work of support and protection of gas facilities to be performed. The Contractor shall not seek additional compensation from gas companies except as specifically set forth in its contract.

II - GENERAL PROVISIONS; GAS COST SHARING WORK

1. General:

The Contractor shall perform City work with interferences from existing live and abandoned gas facilities. This shall be defined as utility work. Therefore, this contract includes bid items, specifications and estimated quantities designed to fully compensate him/her for the incremental costs of supporting, protecting, providing accommodations and, avoiding disturbing gas facilities located in the streets shown on the contract drawings. In the event that any other provisions of this contract related to gas facilities (or private utilities) conflict with these provisions, these provisions shall supersede and govern all work related to gas facilities owned by the companies operating in the project area. All utility work, as defined in these specifications, including changes and additions thereto shall be paid solely by the City except when specified otherwise in this contract. Contractor hereby agrees that the facility operator shall not be liable to pay him/her for any work performed including extra utility work. Contractor agrees that its bid prices include all compensation for loss of productivity and efficiency, idle time, delays (including any delays occasioned by negotiation of a contract change), change in operations, mobilization, demobilization, remobilization, added cost or expense, lost of profit, other damages or impact costs that may be suffered by or because of utility work, or the presence of gas facilities in the proximity of City work and that it will not seek additional compensation for these items. All disputes shall be resolved as specified in the contract.

Pursuant to the Act, Agreement, and the New York City Administrative Code, the gas company(ies) has been directed by the Commissioner and is required to perform all maintenance, repairs, replacement, shifting, alteration, relocation, and/or removal work that are not part of this contract. By having bid on this contract, the Contractor understands and agrees that the Commissioner has preasserted any right the City has to require, including the issuance of any directives or so called "order outs" under the New York City Administrative Code, any or all gas companies to maintain, repair, replace, protect, support, shift, alter, relocate, and/or remove all gas facilities that are about to be disturbed by the City contract work. The issuance of additional such directives during the performance of the contract work, where necessary in the sole judgment of the Commissioner, shall be initiated by such Commissioner as set forth in the relevant sections of the Act and Agreement. Contractor further agrees to insert such requirements as set forth herein above into any contracts with its approved subcontractors so that its subcontractors also understand and agree to such contract requirements.

2. Gas Interferences And Accommodations:

During the performance of sewer and water main work funded by the New York City Department of Environmental Protection (NYCDEP), as instructed by the Engineer, the use of any applicable contract bid item is allowed in order to resolve and accommodate all gas facilities interferences with such City work, including the removal of contaminated soil in associated trench excavation. This is in addition to the specified EP-7 bid items in the contract. Payment for such accommodation shall be funded by EP-7 bid item "UTL-GCS-2WS - GAS INTERFERENCES AND ACCOMMODATIONS" (F.S. Fixed Sum). The value of such accommodation shall be computed by multiplying the appropriate unit prices bid to the quantity of work performed, as determined by the Engineer, and applying the total amount thus to be paid

to EP-7 bid item "UTL-GCS-2WS - GAS INTERFERENCES AND ACCOMMODATIONS". When EP-7 bid item "UTL-GCS-2WS - GAS INTERFERENCES AND ACCOMMODATIONS" does not exist, such additional accommodation work shall be at no cost to the City but shall be a matter of adjustment between gas facility operator and Contractor. Private facilities, other than gas, that become in interference due to gas interferences accommodations shall also be accommodated, if so directed by the Resident Engineer, at no additional cost to the City and, provided that its owner agrees to be responsible for all additional costs to Contractor, otherwise, such facility shall be ordered by the City to be maintained, shifted, relocated or replaced by its owner at his/her expenses.

2a. Water Main Accommodations:

When water main construction is to be performed in this contract, Contractor shall be required, if warranted by field conditions, and at locations designated by the Resident or Borough Engineer, to change the vertical or horizontal alignment of water mains including but not limited to all additional labor, material, work method accommodations, furnishing, delivering and laying offset fittings and pipes, etc., necessary in order to complete water main installation and, avoid gas interferences in the project area, including street intersections. Typical work method accommodations shall include, but not be limited to, pier and plate, installation of filter fabric and select fill, etc. Such work shall be performed as directed by the Engineer and in accordance with contract specifications and latest edition of water mains standards and specifications.

2b.Sewer Accommodations:

When sewer construction is to be performed in this contract, Contractor shall be required, if warranted by field conditions, and at locations designated by the Resident or Borough Engineer, to change the horizontal alignment of sewer facilities (if possible) including but not limited to all additional labor, material, work method accommodations, furnishing, delivering and construction of additional manholes or modification of manholes/catch basins, extending chute connections, house connections, using alternate materials and methods, poured-in-place structures, etc., necessary in order to complete sewer installation and, avoid gas interferences in the project area, including street intersections. The term sewer facility shall include, but not be limited to, all sewer pipe and appurtenances, manholes, catch basins, catch basin chutes, etc. Such work shall be performed as directed by the Engineer and in accordance with contract specifications and latest edition of sewer standards and specifications.

3. Quantity Overruns, EP-7 Funded Bid Items:

No quantity overrun, in excess of one hundred twenty five (125) percent, shall be permitted for EP-7 funded bid items (gas) included in this contract, except when Resident Engineer determines that such overruns are caused by field modifications to planned City work, or approved construction methods, or contract scope changes. Overruns not paid by City shall be negotiated and paid to Contractor by gas facility operator who then shall be entitled to reimbursement by NYCDEP under established cost sharing procedures.

4. Changes And Extra Work:

This section is not applicable to work defined under "Emergency Reconstruction Contracts" or so-called "Where and When Contracts" since these projects, by definition, inherently encounter unanticipated gas facilities and cannot be pre-engineered. In all other cases, any contract changes proposed for City work shall also cover and include all associated changes to support and protection of gas facilities affected by such changes to City work. In all other cases where the Contractor finds that City work cannot be performed as planned and specified and/or, as approved because of a need to support, protect and/or alleviate interferences from gas facilities that were not listed and/or shown, or incorrectly shown in contract plans and specifications, he shall immediately notify the Resident Engineer and the facility operators' representative of his findings. Resident Engineer shall promptly examine such claims and determine whether or not such work is covered by contract bid items and /or specifications (contract bid items and specifications shall include city contract items as well as EP-7 items). The Resident Engineer shall also examine the claim to determine if the application of EP-7 bid item "UTL-GCS-2WS - GAS INTERFERENCES AND ACCOMMODATIONS" is appropriate to resolve the claim. If upon examination, the Engineer determines that such field conditions were unanticipated (not shown and/or listed, or incorrectly shown in contract documents) and are not covered by bid items and contract specifications, he shall then direct the Contractor and the affected facility operator to negotiate the cost of supporting and

protecting, and/or alleviating the impact on City work caused by such unanticipated gas facilities with each other with the understanding that the performance of City work shall continue during negotiations. If a cost agreement is reached, the Contractor and facility operator shall adjust such costs between themselves at no additional costs to the City contract. If the Contractor and affected facility operator do not reach an agreement concerning the price to be paid for the extra work within five (5) business days of the Engineer's directive to engage into such negotiations and, after considering: public safety and inconvenience, requirements of laws and regulations applicable to private utilities, integrity of all utility systems, including but not limited to sewer and water, gas, electric, telephone and, cable TV facilities, sound engineering practices, cost (long and short term) to all affected parties, and potential City work delays, then the Resident Engineer, depending on nature and severity of interferences with City work, shall either, direct the facility operator to relocate or replace its facilities at its own discretion and cost, reimbursable by NYCDEP under established gas cost sharing procedures or, direct the Contractor to perform the utility work on actual time, material and equipment costs basis pursuant to relevant contract requirements and amendments. Contract bid prices for any applicable items of work involved shall be applied, or converted to an allowance for time and material charges. Changes shall be for affected portions of utility work and, shall be processed with EP-7 funds.

5. Excavation:

All excavators shall notify the NYC/LI One Call Center at 1-800-272-4480 at least two (2) working days, not including the day of the call, but not more than ten (10) working days in advance of the start of any excavation work. The gas company(ies) will mark out its facilities within the project limits and provide Construction Inspector(s) during all excavation work in close proximity (within twelve (12) inches) to gas facilities. The Contractor shall exercise extreme caution when excavating in the vicinity of any gas facilities. Hand excavation shall be performed within twelve (12) inches of gas facilities. The Contractor prior to excavating underneath these facilities shall adequately support all gas facilities. Standard support details for gas facilities have been included in the specifications. Any damage to gas facilities shall be reported immediately to the gas company(ies). The Contractor shall be responsible for all cost associated with repairs made necessary by damages caused by his operations.

6. Backfilling And Street Restoration:

Backfilling operations and street restorations shall be in accordance with contract requirements.

7. Non-Responsive Bids:

Every gas (EP-7) bid item has a suggested "Not less than" value per unit indicated on contract bid sheet. Bids resulting in cost of less than suggested for EP-7 items are hereby prohibited and if submitted shall be considered NON-RESPONSIVE.

8. Minimum Clearances:

Clearance requirements for City work shall govern and supersede any clearance requirement of gas facility operator. Therefore, a minimum of twelve (12) inches clearance between private utilities and City water mains, sewers or related structures to be installed in this contract shall be maintained. When this clearance is not attainable, the Resident Engineer may allow a minimum of four (4) inches clearance. With less than twelve (12) inches clearance a neoprene/polyethylene shield (to be provided by facility operator) shall be installed as part of all work item specifications. However, if Resident Engineer determines that City work cannot be performed within allowable clearance and no reasonable City accommodation (no-cost change to City work) is possible, the City shall direct the facility operator to remove, relocate, shift, or alter their facility(ies) pursuant to the New York City Administrative Code.

9. Work By Facility Operator:

The facility operator may find it necessary to perform the following types of work during performance of City work: accommodating a contractor's request for gas facilities modifications (in order to facilitate City contractor's proposed construction method) or, remedial and emergency work on gas facilities proper with their own resources and materials if an approved method of construction for City work causes unanticipated disturbances to gas facilities or, replacing defective gas facilities when they are exposed by the Contractor and their actual conditions are observable by the facility operator. Also included in the above category of defective gas facilities are: the presence of environmental contaminants attributable to

the gas facility in or around gas facilities. If such work is deemed required by the facility operator or if facility operator is directed by the City to address such deficiencies at any time during the course of construction, the Contractor shall modify the construction schedule at no cost to the City and allow the facility operator five (5) business days to perform such work without interferences. Additional costs to the facility operator (in cases of accommodations) or, Contractor (in cases of defective gas facilities) due to such gas work, if any, shall be the responsibility of the parties involved and not of the City. Such costs shall be a matter of adjustment between the Contractor and the facility operator.

10. Materials Furnished By Facility Operator:

It shall be the Contractor's responsibility to inspect material to be installed by him immediately upon delivery and advise the facility operator through its authorized representative, of all damaged materials. The Contractor at no additional costs to the City or the facility operator shall replace any material that is damaged or lost after the Contractor's inspection.

11. Liability And Insurance:

Notwithstanding the provisions of this contract, the existing division of liabilities to third parties shall remain the same as between the City and the company. Therefore, it is specifically agreed by the City, company and Contractor (by bidding on this contract) that for the purpose of any liabilities to third parties, that the City contractor performing work directly and physically relating to gas company facilities in this project, shall be deemed an agent of the company and not an agent of the City, the New York City Municipal Water Finance Authority, or the New York City Water Board. Contractor shall include the company as an additional insured on all insurance policies maintained to comply with the City's insurance requirements.

12. Width And Depth Of Excavation:

Contractor shall not be authorized to deliberately change trench or excavation widths and/or depth specified without Engineer's approval. Enlargement of any side of excavation up to eighteen (18) inches beyond pay limits (or inside face of sheeting) requested by the Contractor for the installation of certain types of sheeting may be granted. However, such enlargements or those greater than allowable shall not be approved when, in the sole judgment of the City, field conditions allow the water mains and sewer work to be performed within the limits specified and, the sole purpose of such enlargement request is to impact adjacent utilities (public or private) whose support and protection are part of this contract. Any approval shall be given at no additional cost to the City contract, including EP-7 funding, and all costs associated with unauthorized enlargements shall be the sole responsibility of the Contractor.

13. Depth And Crossing Angles Of Gas Facilities:

Where gas facilities are shown (or specified as) crossing proposed alignment of sewers, water mains, catch basins and chute connections or any other proposed excavations at specific angles (as measured off plans or sketches or specified in contract), it shall be understood that actual field measurements may deviate (plus or minus) forty-five (45) degrees from those shown or specified. The cover, or depth from street surface to top of facilities, shall be as shown or specified in contract documents, no deviation is to be assumed. Where gas facilities are not shown on contract documents, but their support and protection are otherwise included in this contract then, all references to facilities crossing at "various angles and depth" in the gas sections shall mean that such facilities are crossing sewer, water, catch basin and, catch basin chute, and other excavations at a ninety (90) degree angle to the proposed sheeting line or side of excavation (for unsheeted trenches) with an allowable deviation of forty-five (45) degrees in any direction, except for catch basin chute excavation where the allowable deviation shall be sixty (60) degrees. Where the cover is not noted or specified, the bottom face of such facilities shall be assumed to be crossing catch basin chutes at a depth of three (3) foot eight (8) inches or less from the street surface. Paragraph No. 2 above shall apply in cases of distribution water main construction. Appropriate bid items and specifications are provided for cases where angle and depth are greater than stated above. This section also applies to work defined in "Emergency Reconstruction Contracts" or so-called "Where and When Contracts". These contracts are not pre-engineered and consequently have no drawings, sketches or determined locations and so, gas facilities encountered will be crossing existing and proposed sewer, water, catch basin/catch basin chutes and all appurtenances at various angles and depths.

14. Maintenance Of Traffic For Gas Work:

All work pertaining to gas bid items and specifications shall be performed within the contract maintenance of traffic plan as specified in the contract document. The bid price for the Maintenance and Protection of Traffic shall cover all work pertaining to gas items. The City shall make compensation for additional maintenance and protection of traffic items in connection with gas item of work only when such additional work is deemed reasonable and necessary by the Resident Engineer and is approved by him prior to its performance.

15. Relocated Gas And Temporary Systems Installation:

In cases where the Contractor is allowed to select the location for temporary construction such as, installation of dewatering headers, wells, well points, etc., he shall not disturb any gas facilities shown on sketches provided in this section. The only exception shall be, if the affected gas company agrees to such relocation and provided that the cost of such relocation is a matter of adjustment between the company and Contractor, and at no cost to the City.

16. Role Of Company Inspector:

In any case in which the City elects to perform some or all support and protection work with its own employees, personnel or contractors, the facility operator shall provide onsite inspectors to approve and certify such support and protection work (exclusive of City accommodations) performed by the City's own employees, personnel, and contractors. Facility operator's inspectors are not authorized to direct City contractor during the performance of contract work. They shall act through the City Resident Engineer and provide him/her required approvals and certifications, prior to preparing partial payments of EP-7 items, in a format and frequency to be prescribed by the appropriate City Head of Construction.

17. Coordination With Gas Company:

The Contractor shall be required to notify the gas company(ies), in writing, at least two (2) weeks prior to the start of final paving in order to allow companies to complete any unfinished gas work located within the area to be paved. Every effort shall be made to maintain gas service with minimum inconvenience to the public.

III - TECHNICAL SECTION

SECTION 6.01 - Trench Crossings; Support And Protection Of Gas Facilities And Services.

1. Description:

Under this section, the Contractor shall provide all labor, materials, equipment, and incidentals required to support and/or protect the integrity of gas mains, services and appurtenances of any sizes, configurations, and operating pressures crossing trench excavations above subgrade for planned construction of sewers and water mains facilities. A gas service shall be defined as a gas pipe of three (3) inches in diameter or less branching from the main to a customer pick up point or property valve box. A gas main may be any size pipe that is part of a distribution or transmission network other than services described above. Crossings shall be defined as gas facilities spanning the width of excavation (one side to the other side). These crossings may be at various angles and depth as shown on "Gas Cost Sharing Work Standard Sketches Nos. 1 and 1A", and as specified in "General Provisions; Gas Cost Sharing Work Paragraph No. 13" and, at the locations shown or listed in contract documents. The gas company operating in the area, (facility operator), owns these facilities. The work shall be performed in accordance with contract specifications, plans, and at the directions of the Resident Engineer in consultation with the authorized representatives of the facility operator.

2. Method Of Construction:

A. Protection: In general, the gas facilities shall be protected as required by New York State Industrial Code 753. In particular, the Contractor shall use hand excavation methods (pick and shovel or hand held power tools) directly below the pavement base to expose the gas facilities (marked out by facility operators) and to ascertain the clearances and cover of the facilities with respect to the proposed excavation. Upon exposing the affected facilities sufficiently, at the discretion of the Resident Engineer, to ascertain the foregoing, Contractor shall be permitted to proceed with a combination of hand and machine excavation, as appropriate, outside a zone of protection whose limit shall be defined as a perimeter located twelve (12) inches from the outside face of each gas facility crossings (See "Gas Cost Sharing Work Standard Sketch No. 2"). If the facilities are in direct interference with City work, meaning that "Minimum Clearances" described in "General Provisions; Gas Cost Sharing Work Paragraph No. 8" cannot be maintained, and excavation has to be temporarily or permanently abandoned then this particular location shall become a test pit and dealt with as specified in Section 6.07, and "General Provisions; Gas Cost Sharing Work Paragraphs Nos. 2 and 8".

B. Support: Gas mains or services crossing excavations equal or less than four (4) feet wide are generally self supporting, unless field conditions as determined by the Resident Engineer require otherwise. The support requirements for gas mains and services crossing excavations greater than four (4) feet wide shall be as shown on the attached "Gas Cost Sharing Work Standard Sketch No. 1" and Contractor shall use sheeting methods that permit the maintenance of gas facilities in their existing locations and configurations. Alternate methods equivalent to those shown on the sketch or accommodations by the facility operator proposed by the Contractor in order to facilitate the execution of the specified work shall be allowable, provided that prior approval is obtained by the Contractor from the Engineer and the facility operator. The support and protection of gas facilities crossings shown on plans, drawings, listings or otherwise identified in this contract shall not be circumvented with the issuance of so called "order outs".

3. Method Of Measurement:

The Contractor shall be paid for supporting and/or protecting gas facilities crossing trench excavations under the appropriate bid items covered by this section. The Contractor shall be directly responsible to the facility operator for the total cost of using any alternate method requiring the use of resources owned by the facility operator. Regardless of the method used, the City shall pay the bid price for the appropriate support and/or protect item of work. The average rate charged by the facility operator for alternate support and protection work such as, disconnecting and reconnecting gas services is listed in attached "Schedule GCS-A".

4. Payment Restrictions:

These items shall not be paid for: gas services crossing unsheeted water main trench excavation; abandoned gas main/services identified by facility operator; gas mains/services crossing trench excavations for fire hydrant branch connections pipes, catch basins and/or chutes (sewer drain pipe), house sewer and/or water services; gas facilities encroaching any face of excavation for sewer and/or water construction, all of which are covered under other contract sections. Also this item shall not be paid for new gas mains and services crossing water trenches when trenching for such new facilities has been performed by the Contractor in common with trench excavation for City work (overlapping trench limits). The cost of supporting and protecting such gas facilities crossings shall be deemed included in the cost of trench excavation for the new gas facilities. This payment restriction shall apply even if such common trench gas excavation is not part of the contract. The prices bid for items covered by this section represent full compensation to Contractor to completely perform the work described. No other bid items shall be combined with these items in order to pay for gas main and/or services crossing excavations specified herein.

5. Method Of Payment:

Each (Ea.) gas facility crossing trench excavation as described in these specifications shall be counted for payment.

6. Price To Cover:

The cost of timber/steel supports installed for gas facilities shall be included in the bid price. The bid price for each crossing shall also cover all additional supervision, labor, material (except those provided by the facility operator), equipment and insurance necessary to completely maintain the gas facilities without disruption of service to the customers and in accordance with contract plans, specifications and facility operator standards. The price shall also include: changes of method of operations; sheeting modifications where necessary to accommodate the gas facilities crossings; installation and removal of water pipe under gas facilities (so called "snaking"); extra care during excavation (including hand excavation under existing single and multiple gas facilities); extra backfilling and compaction around, over and under gas facilities; installation and removal of sheeting around gas facilities; associated maintenance and protection of traffic; barricades; and traffic plates that may be required to temporarily close and/or complete the work.

SECTION 6.02 - Extra Excavation For The Installation Of Catch Basin Sewer Drain Pipes With Gas Interferences.

1. Description:

Under this item, the Contractor shall provide all labor, materials, equipment, insurance, and incidentals for the extra excavation associated with the installation of catch basin sewer drain pipes (chute) under gas facilities of various sizes crossing the trench excavation at various angles and depth at the locations shown in the contract documents and also, for the support and protection of these facilities during associated excavation and backfill operations. The gas company operating in the area, (facility operator), owns these facilities.

2. Method Of Measurement:

The bid price shall be per location (Each) where extra excavation is required when catch basin sewer drain pipes are installed at an upstream invert depth lower than four (4) feet (up to a maximum of six (6) feet) from the proposed pavement grade because the bottom faces of interfering gas mains and appurtenances are located at a depth greater than three (3) foot eight (8) inches from proposed pavement surface (See "Gas Cost Sharing Work Standard Sketch No. 4").

3. Method Of Construction:

Incremental cost responsibility for chute excavation is determined by the first private facility encountered starting from catch basin structure proper and that prevents the installation of the chute connection at an upstream cover less than or equal to three (3) feet or any other minimum cover required to avoid City facilities (e.g. water, sewer, etc.) as directed by the Resident Engineer.

4. Payment Restrictions:

This item shall not apply and related bid item shall not be paid in cases where:

A. Upstream invert chute is more than six (6) feet deep because of gas facilities.

B. Chute cannot be installed above existing gas facilities because of interferences with other private facilities that are not otherwise covered under this contract, regardless of upstream invert depth.

The above cases shall be at no cost to the City, but shall be a matter of adjustment between the Contractor and the facility operator(s).

5. Price To Cover:

The bid price shall cover the additional cost of all additional supervision, labor, materials, equipment and insurance, to complete the installation of catch basins and associated sewer connections in accordance with the contract plans and specifications. The price shall include: excavation by hand around and under single and multiple gas facilities; locating, supporting and protecting gas facilities; backfilling and all other items necessary to perform all work incidental thereto including: installation and removal of drain pipe under gas facilities ("snaking"); widening of trenches to facilitate the above work; subsequent additional

backfill and pavement restoration; modifying precast catch basin window to accommodate connection; changing sheeting method and configuration to accommodate gas facility crossings; maintenance and protection of traffic; barricades; and installation of traffic plates that may be required to temporarily close and/or complete the work. The price shall not include removal of ledge rock and/or excavation of boulders in open cut.

SECTION 6.02.1 - Extra Excavation For The Installation Of Catch Basin Sewer Drain Pipes With Upstream Inverts Greater Than Six (6) Feet.

1. Description:

Under this item, the Contractor shall provide all labor, materials, equipment, insurance and incidentals for the extra excavation of catch basin chutes where the upstream invert is greater than six (6) feet under gas facilities of various sizes crossing the trench excavation at various angles and depth at the locations shown in the contract documents or as determined by field conditions and also, for the support and protection of these facilities during the associated excavation, sheeting and backfilling operations.

2. Method Of Measurement:

The bid price shall be per location (Each) where extra excavation and sheeting is required when the catch basin chute installed at an upstream invert depth lower than six (6) feet from the proposed pavement grade because the bottom faces of the interfering gas mains and appurtenances are located at a greater depth than three foot eight inches from the proposed pavement surface only.

3. Method Of Construction:

Incremental cost responsibility for chute excavation is determined by the first private facility encountered during such excavation when initiated from catch basin structure and that prevents the installation of the chute at an upstream cover less than or equal to three (3) feet or any other cover required to avoid City facilities as directed by the Resident Engineer.

4. Payment Restriction:

This item shall not apply and related bid item shall not be paid in cases where:

Upstream invert chute is less than or equal to six (6) feet deep because of gas facilities. Section 6.02 shall be paid.

5. Price To Cover:

The bid price shall cover the additional cost of all supervision, labor, materials, equipment and insurance to complete the installation of catch basin and associated sewer connections in accordance with the contract plans and specifications. The price shall include: excavation by hand around and under single and multiple gas facilities; locating, supporting and protecting gas facilities incidental thereto; widening of trenches to facilitate the above work; subsequent additional backfilling and pavement restoration; modifying pre-cast basin window to accommodate connection; the installation of catch basin with deeper sumps as specified; additional sheeting and changes in sheeting method and configuration to accommodate gas facility crossings; maintenance and protection of traffic; barricades; and installation of traffic plates that may be required to temporarily close and/or complete the work.

SECTION 6.03 - Removal Of Abandoned Gas Facilities. All Sizes.

1. Description:

Under this section the Contractor shall provide all labor, materials, equipment, insurance and, incidentals required for the removal of abandoned gas mains, services, or appurtenances thereof, located within the street shown on the contract plans, owned by gas company operating in the project area (facility operator), used or to be used for or in connection with or to facilitate the conveying, transportation, distribution or

furnishing of gas (natural or manufactured or mixture of both) for light, heat, or power, but does not include property used solely for or in connection with business of selling, distributing or furnishing of gas in enclosed containers. Such removal shall include only abandoned gas facilities that interfere with (i.e. cause additional work) City work.

2. Determination Of Operating Status Of Gas Facilities:

The Contractor shall notify facility operator, as required by New York State Industrial Code 753. Gas facilities shall not be removed without the approval of the facility operator whose authorized representative shall certify in writing (specific facility or area wide facilities certification) and in a timely manner acceptable to the Resident Engineer that abandoned facilities are free of combustible gas and any other environmental contaminants prior to removal. The Resident Engineer shall rely on facility operator's certification. The facility operator may request the excavation of test pits (See Section 6.07) for this determination ahead of City work and, Contractor shall provide safe access, facilitate and permit facility operator to enter test pit excavations for the purpose of testing gas facilities to be removed by the Contractor. However, facility operator may prefer to make this test during performance of City work, in order to issue the above certification. This shall be permitted provided that it is agreed that additional costs, if any resulting from this choice shall be a matter of adjustment between the Contractor and facility operator only, and at no cost to the City.

3. Restrictions:

The facility operator shall be solely responsible for its contaminated gas facilities, surrounding contaminated soil and their disposal and abatement procedures, unless contract bid items are applicable and provided for such work. In such cases, the quantity removed shall be charged to EP-7 bid item "UTL-GCS-2WS - GAS INTERFERENCES AND ACCOMMODATIONS" at the City bid prices.

4. Method Of Measurement:

Abandoned gas pipeline removal shall be measured for payment per linear foot of pipe and appurtenances removed.

5. Price To Cover:

The price shall cover all additional cost of supervision, labor, materials, equipment, and insurance necessary to complete this work in accordance with the contract plans and specifications, including excavation by hand around and under other City and facility operator owned properties and, where necessary, support and protection of such properties. The price shall also cover breaking, cutting, and/or burning of abandoned gas pipes and their disposal from the site; sealing open ends remaining in the excavation with concrete or caps (caps to be provided by the facility operator) and backfilling of the area where the pipeline has been removed with clean backfill. The price shall also include any required dump charges. This item does not include any type of extra excavation, backfilling, compaction, pavement removal and restoration associated with abandoned gas facilities removal, all of which are covered under Section 6.06.

SECTION 6.03.1 - Removal Of Abandoned Gas Facilities With Possible Coal Tar Wrap. All Sizes. (For National Grid Work Only)

1. Description:

Under this section the Contractor shall provide all labor, materials, equipment, insurance and, incidentals required for the removal of abandoned gas mains, services or appurtenances thereof, located within the street shown on the contract plans, owned by the gas company operating in the project area (facility operator), used or to be used for or in connection with or to facilitate the conveying, transportation, distribution or furnishing of gas (natural or manufactured or mixture of both) for light, heat, or power, but does not include property used solely for or in connection with business of selling, distributing or furnishing of gas in enclosed containers. Such removal shall include only abandoned gas facilities that interfere with (i.e. cause additional work) City work. These gas facilities may be coated with Coal Tar Wrap and so, may require special handling and disposal methods as specified in National Grid Standard Operating Procedure 12-2, Coal Tar Wrap Handling and 12NYCRR56.

2. Determination Of Operating Status Of Gas Facilities:

The Contractor shall notify facility operator, as required by New York State Industrial Code 753. Gas facilities shall not be removed without the approval of the facility operator whose authorized representative shall certify in writing (specific facility or area wide facilities certification) and in a timely manner acceptable to the Resident Engineer that abandoned facilities are free of combustible gas and any other environmental contaminants prior to removal. The Resident Engineer shall rely on the facility operator's certification. The facility operator may request the excavation of test pits (See Section 6.07) for this determination ahead of City work and, the Contractor shall provide safe access, facilitate and permit facility operator to enter test pit excavations for the purpose of testing gas facilities to be removed by the Contractor. However, the facility operator may prefer to make this test during performance of City work, in order to issue the above certification. This shall be permitted provided that it is agreed that additional costs, if any, resulting from this choice shall be a matter of adjustment between the Contractor and the facility operator only, and at no cost to the City contract. Should such investigation result in the determination that the abandoned gas facilities do not contain Coal Tar Wrap then the removal of said facilities shall be covered under separate item (See Section 6.03).

3. Requirements:

The City Contractor shall excavate abandoned gas facility sufficiently, either in its entirety, or at locations determined by Contractor to allow the removal of Coal Tar Wrap (if present on the abandoned gas facility) and to facilitate the safe extraction of manageable lengths of abandoned pipe without damage to adjacent facilities, utilities or City structures either parallel to or crossing above or below abandoned gas facility. The Contractor is to allow access to the designated cutting points within the Contractor's trench by authorized National Grid personnel who will remove the Coal Tar Wrap as per National Grid procedures. This work by National Grid personnel shall be performed in a timely fashion and shall not unduly impede the Contractor's progress and/or productivity. Upon completion of the coating removal, the Contractor shall be allowed to cut, burn or grind the gas facility and remove the section of abandoned pipe. The Contractor at a site designated by the Contractor shall stockpile the removed pipe. The facility operator will be responsible to provide trucking and disposal services with its own personnel and shall remove the stockpiled pipes during off hours or during such time as agreed to by the Contractor. Since the pipe removed will remain the property of the facility operator and is to be disposed of by the facility operator, the facility operator shall be responsible for any required notifications, filings, dump charges and incidentals associated with the disposal of abandoned gas facilities found to contain Coal Tar Wrap.

4. Method Of Measurement:

Abandoned gas pipeline removal shall be measured for payment per linear foot of pipe and appurtenances removed.

5. Price To Cover:

The price shall cover all additional cost of supervision, labor, materials, equipment and insurance necessary to complete this work in accordance with the contract plans and specifications, including excavation by hand around and under other City and facility operator owned properties and, where necessary, the support and protection of such properties. The cost shall also include hand excavation in the area(s) of proposed abandoned pipe cut(s), cutting and/or burning of abandoned gas pipes and stockpile of removed sections of abandoned pipe and associated maintenance and protection of traffic, blocking and temporary fencing if required. The unit price shall also cover sealing open ends remaining in the excavation with concrete or end caps (end caps to be provided by the facility operator) and backfilling of the area where the abandoned pipeline has been removed with clean backfill material. This item does not include any type of extra excavation, backfilling, compaction, pavement removal and/or restoration (temporary and permanent) associated with abandoned pipe removal ("lost trench"), all of which are covered under separate Section 6.06. The price shall also include allowance for any loss of productivity by the Contractor due to required facility operator work to remove pipe coating and prepare pipe for cutting as well as any change in Contractor's excavation method, additional trucking and/or stockpiling costs.

SECTION 6.03.1a - Removal Of Abandoned Gas Facilities With Possible Coal Tar Wrap. All Sizes. (For Con Edison Work Only)

1. Description:

Under this section the Contractor shall provide all labor, material, equipment, insurance and, incidentals required to prepare abandoned gas mains, services and appurtenances thereof located within the street shown on contract plans, owned by the gas company operating in the project area (facility operator), for removal due to interference with proposed City work. These abandoned gas facilities were, at one time, used for or in connection with or to facilitate the conveying, transportation, distribution or furnishing of gas (natural, manufactured or a combination of both) for light, heat, or power, but does not include property used solely for or in connection with business of selling, distribution or furnishing of gas in enclosed containers. Such preparation for removal shall include only abandoned gas facilities that interfere with (i.e. cause additional work) City work. These gas facilities may be coated with Coal Tar Wrap which may contain asbestos or PCB's and so, may require special handling and disposal methods as specified in Con Edison - ASBESTOS MANAGEMENT MANUAL, CHAPTER 6 - ASBESTOS WORK PROCEDURES, SECTION 06.04 - COAL TAR WRAP REMOVAL. For under 25' (feet) in length and an approved NYC-DEP variance for over 25' (feet).

2. Determination Of Operating Status Of Gas Facilities:

The Contractor shall notify facility operator, as required by New York State Industrial Code 753. Gas Facilities shall not be removed without the approval of the facility operator whose authorized representative shall certify in writing (specific facility or area wide facilities certification) and in a timely manner acceptable to the Resident Engineer that abandoned facilities are free of combustible gas and any other environmental contaminants prior to removal. The Resident Engineer shall rely on the facility operator's certification. The facility operator may request the excavation of test pits (See Section 6.07) for this determination ahead of City work and Contractor shall provide safe access, facilitate and permit facility operator to enter test pit excavations for the purpose of testing gas facilities. However, the facility operator may prefer to make this test during performance of City work in order to issue the above certification. This shall be permitted provided that it is agreed that additional costs, if any, resulting from this choice shall be a matter of adjustment between the Contractor and the facility operator only, and at no cost the City contract. Should such investigation result in the determination that the abandoned gas facilities do not contain Coal Tar Warp then the removal of said facilities shall be covered under separate item (See Section 6.03).

3. Requirements:

The Contractor shall excavate abandoned gas facility sufficiently, either in it's entirety, or at locations determined by Contractor to allow the removal of Coal Tar Wrap (if present on the abandoned gas facility) and to facilitate the safe extraction of manageable lengths of abandoned pipe without damage to adjacent facilities, utilities or city structures either parallel to or crossing above or below abandoned gas facility. The Contractor is to allow access to the designated cutting points within the Contractors trench by authorized Con Edison personnel who will remove the Coal Tar Wrap as per Con Edison and/or NYC-DEP approved procedures. This access shall conform to all applicable codes, rules & regulations. This work by Con Edison personnel shall be performed in a timely fashion and shall not unduly impede the Contractors progress and/or productivity. Upon completion of the coating removal, the Contractor shall be allowed to cut, burn or grind the gas facility and remove the section of abandoned pipe. Contractor shall designate a specific site to stockpile those removed pipes. The facility operator will be responsible to provide trucking and disposal services with its own personnel and shall remove the stockpiled pipes during off hours or during such time as agreed to by the Contractor. Since the pipe removed will remain the property of the facility operator and is to be disposed of by the facility operator, the facility operator shall be responsible for any required notifications, filings, dump charges and incidentals associated with the disposal of abandoned gas facilities found to contain Coal Tar Wrap.

4. Method Of Measurement:

Abandoned gas facility removal shall be measured for payment per linear foot of pipe and appurtenances removed.

5. Price To Cover:

The price shall cover all additional cost of supervision, labor, materials, equipment and insurance necessary to complete this work in accordance with the plans and specifications, including, but not limited to, excavation by hand around and under other City and facility operator owned properties and, where necessary, the support and protection of such properties. The cost shall also include hand excavation in the area(s) of proposed abandoned pipe cut(s), cutting and/or burning of abandoned gas pipes and stockpile of removed sections of abandoned pipe and associated maintenance of traffic, blocking and temporary fencing if required. The unit price shall also cover sealing open ends remaining in the excavation with concrete or end caps (end caps to be supplied by facility operator) and backfilling of the area where the abandoned pipeline has been removed with clean backfill material. This item does not include any type of extra excavation, backfilling, compaction, pavement removal and/or restoration (temporary and permanent) associated with abandoned pipe removal ("lost trench"), all of which are covered under separate Section 6.06. The price shall also include allowance for any loss of productivity by the Contractor due to required facility operator work to remove pipe coating and prepare pipe for cutting as well as any change in Contractor excavation method, additional trucking and/or stockpiling costs.

SECTION 6.04 - Adjust Hardware To Grade Using Spacer Rings/Adaptors. (Street Repaving.)

1. Description:

Under this section, the Contractor shall provide all labor, supervision, materials, equipment, insurance and incidentals required to adjust to final grade gas street surface hardware located within the contract area boundaries shown on the plans. The gas company operating in the area, (facility operator), owns these facilities. The work shall be performed in accordance with the contract plans, specifications and at the directions of the Resident Engineer in concurrence with authorized representative of the facility operator.

2. Materials:

The facility operator shall furnish and deliver all prefabricated hardware parts required. These include adaptors for the grade adjustment proper and new street hardware if existing ones are found to be defective, all in accordance with the facility operator standards and City rules and regulations. The Contractor shall notify the facility operator of the installation schedule at least three (3) business days before materials are required on the site. Should the facility operator fail to deliver the necessary material according to any schedule mutually agreed upon by the Contractor and facility operator, the City shall not be responsible for any delays attributable thereto, nor for the failure of delivery of such materials. On project where material storage is not permitted on site, the facility operator shall deliver the required material to the Contractor's yard and it shall be the Contractor's responsibility to transport the material to the work site when needed for installation. It shall also be the Contractor's responsibility to inspect the materials to be installed by him immediately upon delivery and advise the facility operator through its authorized representative, of all damaged materials. The Contractor at no additional expense to the City or the facility operator shall replace any material that is damaged or lost after the Contractor's inspection.

3. Method Of Measurement:

The Contractor shall be paid for each six (6) inch round box and/or nine (9) inch square box adjusted to grade regardless of adjustment height requirements.

4. Price To Cover:

The unit price bid for this item shall include all additional labor, supervision, insurance, equipment and, material (except those to be provided by the facility operator), required to adjust each box to grade as required in the contract plans and specifications. The bid price shall also include the removal of existing frames and covers from existing facilities to be salvaged and returned to the facility operator and, all material transportation from the Contractor's material storage yard to the work site. In addition the bid price shall include "chipping" around existing box using appropriate means and methods where grinding is required.

SECTION 6.05 - Adjust Hardware To Grade By Resetting. (Road Reconstruction.)

1. Description:

Under this item, the Contractor shall provide all labor, supervision, materials, equipment, insurance and incidentals required to adjust to the proposed grade gas street surface hardware located within the contract area boundaries shown on the plans. The gas company operating in the area, (facility operator), owns these facilities. The work shall consist of either building up or lowering or resetting the casting by removing the existing frame and cover building up or decreasing the existing installation, replacing the frame and/or cover if damaged or worn out, as determined by the Resident Engineer, with a new frame and/or cover furnished by the owner, and setting the frame and cover to new elevation. The work shall be performed in accordance with the contract plans, specifications and at the directions of the Resident Engineer.

2. Materials:

The facility operator shall furnish and deliver all new hardware parts required. The Contractor shall furnish materials such as mortar, bricks and concrete in compliance with contract requirements. At locations where high-early strength concrete is required under this contract to be placed adjacent to gas facilities, then the requirement for concrete shall be high-early strength complying with the current New York State Department of Transportation, Standard Specifications for Class F concrete. Existing castings may be replaced as required and deemed necessary by the Engineer and by City rules and regulations. The Contractor shall install the new castings of various sizes furnished by the facility operator. The Contractor shall notify the facility operator of the installation schedule at least three (3) business days before materials are required on the site and, shall provide off-loading services to the facility operator. Should the facility operator fail to deliver the necessary material according to any schedule mutually agreed upon by the Contractor and facility operator, the City shall not be responsible for any delays attributable thereto, nor for the failure of delivery of such materials. Such delays shall be a matter of adjustment between the Contractor and the facility operator. On project where material storage is not permitted on site, the facility operator shall deliver the required material to the Contractor's yard and it shall be the Contractor's responsibility to transport the material to the work site when needed for installation. It shall also be the Contractor's responsibility to inspect the materials to be installed by him, immediately upon delivery and advise the facility operator through its authorized representative, of all damaged materials. The Contractor at no additional expense to the City or the facility operator shall replace any material that is damaged or lost after the Contractor's inspection.

3. Methods Of Construction:

The Contractor shall remove and reinstall existing castings or install new castings to the proposed grade. Setting and resetting the castings shall be done with mortar and brick according to the standards of the facility operator. Work shall be performed in a workmanlike manner. Castings that are deemed unacceptable for resetting shall remain the property of the facility operator and he shall be responsible for their removal and proper disposal from site. No traffic shall be allowed on adjusted street hardware until permitted by the Engineer.

4. Method Of Measurement:

The Contractor shall be paid for each gas hardware adjusted to grade regardless of size or adjustment height requirements (up or down).

5. Price To Cover:

The unit price bid for this item shall include all additional labor, supervision, insurance, equipment and, material (except those to be provided by the facility operator), required to adjust each gas hardware to grade as required in the contract plans and specifications. The bid price shall also include the removal of existing frames and covers from existing facilities; building up the existing installations with bricks and mortar, or lowering the existing installation by removing bricks and mortar; replacing damaged frames and/or covers with new frames and/or covers furnished by the facility operator; setting the frames and covers to the new elevations; protect existing installations; repair minor structural damages to existing installations prior to resetting frames; unloading of furnished castings at the Contractor's yard and transporting castings from the Contractor's yard to the job site as required; completing the work in

accordance with the contract plans, specifications and, at the directions of the Engineer. In addition the bid price shall include "chipping" around existing gas facilities using appropriate means and methods where grinding is required.

SECTION 6.06 - Special Care Excavation And Backfilling.

1. Description:

Under this section, the Contractor shall provide all labor, materials, equipment, insurance and incidentals required to support and protect the integrity of live gas facilities including mains, services, related structures and appurtenances during excavations. The gas company operating in the area, (facility operator), owns these facilities. The work shall be performed in accordance with the contract plans, specifications and at the directions of the Resident Engineer in consultation with authorized representatives of the facility operator.

2. Applicability Of Section:

This section shall apply to live gas facilities of various sizes located within two (2) feet of any face of unsheeted excavation, (unsheeted excavation refers to any excavation performed for city work and includes excavations performed that are to be subsequently sheeted using approved methods) and paralleling or, encroaching any face of excavation. Also, for crossings greater than forty-five (45) degrees and/or located at a cover depth greater than five (5) feet from existing street surface. Parallel facilities are not exposed at any time during excavation (See "Gas Cost Sharing Work Standard Sketch No. 5"). Encroaching facilities are partially exposed inside the limit of excavation (See "Gas Cost Sharing Work Standard Sketch No. 5"). This section shall also apply to gas facilities crossing catch basins excavation, and catch basins sewer connections (chutes) trench excavation only when extra depth (covered in other section), is not required for chutes installations because of such utilities interferences (See "Gas Cost Sharing Work Standard Sketch No. 3"). This section shall also apply to gas services (if shown or otherwise listed in contract documents) crossing unsheeted excavations for water mains, gas facilities crossing fire hydrant branch connections, house sewer and/or water service connections excavations. This section shall also apply for so called "loss trench", as described further, and for additional excavation (pavement and/or soil), backfilling, compaction, roadway base and pavement restoration due to abandoned gas facilities, only if removed by Contractor. If operating status of gas facilities cannot be determined prior to excavation then such facilities shall be considered live and this section shall fully apply. The excavation around fully exposed live gas facilities along and within limits of excavation (not crossings) shall be covered by this section also (not shown on "Gas Cost Sharing Work Standard Sketch No. 5"), however the support requirement, if any is required, of such facilities is beyond the scope of these specifications and therefore shall be the responsibility of facility operator to determine and prescribe, at no cost to the City contract, but shall be a matter of adjustment between the Contractor and facility operator.

3. Payment Restriction:

No special care excavation shall be paid for abandoned gas facilities paralleling and/or encroaching excavation and therefore are not in direct interference with City work. Except as allowed in this section, the bid item specified under this section shall not be used in combination with items covered under other sections for work done due to a particular gas facility. This item shall not be paid for new gas facilities when trenching for such new facilities has been performed by the Contractor of record in common with trench excavation for City Work (overlapping trench limits). The cost of excavating with care as defined in this section shall be deemed included in the cost of trench excavation for the new gas facilities. This restriction shall apply even if such gas common trench excavation is not part of the contract. If facilities are in direct interference with City work, meaning that "Minimum Clearances" described in "General Provisions; Gas Cost Sharing Work Paragraph No. 8" cannot be maintained and excavation has to be temporarily or permanently abandoned then this particular location shall become a test pit and dealt with as specified in Section 6.07 and "General Provisions; Gas Cost Sharing Work Paragraphs Nos. 2 and 8".

4. Method Of Construction:

All excavation in the vicinity of gas facilities shall be as required by NYS Industrial Code 753. Where these facilities are paralleling and located two (2) feet or less from the limits of the proposed excavation, the Contractor shall use hand excavation methods (pick and shovel or hand held power tools) to ascertain

the clearances of these facilities with respect to the proposed excavation. Once the location of these facilities with respect to the proposed excavation is verified to the satisfaction of the Resident Engineer, the Contractor shall then proceed with a combination of hand and machine excavation as required preserving the integrity of the facilities. The installation of timber supports or underpinning, when soil foundation cannot fully support partially exposed pipes, may be required to prevent pipe movement as directed by the Resident Engineer.

5. Method Of Payment:

The unit price for this work item shall be based on cubic yard (CY) of average excavation with care and, is to be considered as an incremental cost for performing City work with gas facilities interferences.

6. Method Of Measurement:

A. For Paralleling Facilities: Volume calculated as: Depth as measured from existing street surface to the bottom of unsheeted trench excavation allowable by OSHA regulations, multiplied by, the width measured as one (1) foot from the face of excavation toward the center of excavation, multiplied by the length of parallel facility, divided by twenty-seven (27) cubic feet per cubic yard (See "Gas Cost Sharing Work Standard Sketch No. 5"). The gas facility is no longer considered to be in interference once sheeting has been installed, therefore no further compensation for paralleling facilities as described above will be made.

B. For Encroaching Facilities: Volume calculated as: Depth of trench excavation multiplied by, the width of partially exposed pipe plus one (1) foot, multiplied by the length of facility encroachment, divided by twenty-seven (27) cubic feet per cubic yard (See "Gas Cost Sharing Work Standard Sketch No. 5").

C. Fully Exposed Gas Facilities: (Not shown on "Gas Cost Sharing Work Standard Sketch No. 5") along and inside trench and/or crossing trench at an angle greater than forty-five (45) degrees and/or a cover depth greater than five (5) feet from the existing street surface. The volume shall be measured as the depth of trench excavation multiplied by the distance measured along the sheeting line between two (2) points of intersections of the gas facilities and the sides of trench excavation, multiplied by the width of trench excavation.

D. For Additional Excavation And Restoration Due To So Called "Loss Trench", When The Integrity Of Pavement And Soil Above And Around Existing Live Gas Facilities Cannot Be Maintained Due To Its Lack Of Cohesiveness: Volume shall be calculated as: Depth of unsheeted trench excavation multiplied by width measured as distance of facility from closest edge of unsheeted excavation plus, width of facility proper plus, one (1) foot or a maximum width of three (3) feet multiplied by length of facility fully exposed divided by, twenty-seven (27) cubic feet per cubic yard (not shown on "Gas Cost Sharing Work Standard Sketch No. 5").

E. For Facilities Crossing Excavation For Catch Basins, Or Chutes Installations (When NYCDEP Funded) Or Fire Hydrant Branch Connections, Or Unsheeted Water Main Trench, Or House Sewer And/Or Water Services: Volume calculated as: Depth as defined above multiplied by, the width taken as the outside diameter of pipe or the width of structure plus one (1) foot on either side (two (2) feet), multiplied by, the length of exposed facility crossing the trench, divided by twenty-seven (27) cubic feet per cubic yard (not shown on "Gas Cost Sharing Work Standard Sketch No. 5").

Overlapping volume dimensions measured as described above may occur when multiple facilities are paralleling excavations, encroaching excavations or crossing catch basins and catch basin chute installations. In such cases, all such facilities shall be counted as one limited by the extreme pipes, faces (See "Gas Cost Sharing Work Standard Sketch No. 2"). The volume shall then be calculated as described above.

7. Price To Cover:

The bid price shall also cover all additional supervision, labor, material, equipment and insurance necessary to excavate while protecting and maintaining (excluding supports for fully exposed live gas) gas facilities without disruption of service to the public and in accordance with contract specifications. The price shall also include, changes of sheeting method and excavation width configuration where necessary to accommodate gas facilities in their existing locations; difficulties during the installation of catch basins,

chute connections, hydrant branch, and house sewer and water connections under or over gas facilities; loss of productivity due to slower rate of excavation (special care) during excavation, including the use of such methods as: hand excavation around existing single and multiple facilities, extra excavation and backfilling due to lost trench because of existing and adjacent gas facilities, compaction, removal of sheeting from the facilities, extra roadway base restoration and temporary pavement, associated maintenance and protection of traffic, barricades, and traffic plates that may be required to temporarily close and/or complete the work.

SECTION 6.07 - Test Pits For Gas Facilities.

1. Description:

Under this section, the Contractor shall furnish all labor, materials, insurance, equipment and appliances necessary to excavate, sheet and, maintain test pits at locations approved by the Resident Engineer in consultation with the facility operator. Test pits shall be dug in order to ascertain exact locations, cover and invert elevations, clearances, alignment and operating status (live or dead) of existing gas facilities. The Contractor shall inspect jointly with the Resident Engineer and facility operator, gas facilities and other structures uncovered, take all relevant measurements and elevations as directed by the Resident Engineer. Tests to determine operating status of gas facilities shall be performed by facility operator. The pits shall be covered with steel plates during daytime nonworking hours, and uncovered, as required, until the inspection work is completed. Testing of gas facilities may require a maximum of four (4) hours. Then, the pits shall be backfilled with clean fill, and resurfaced with temporary pavement. All traffic shall be maintained and all safety measures as stipulated shall be complied with.

2. Methods Of Construction:

A. Excavation: Existing pavement to be removed shall be neatly cut along lines of removal with a saw or other approved equipment which leaves a neat straight joint line along the juncture with subsequently replaced pavement. Excavation in the vicinity of utilities and other structures shall be performed using hand tools. Use of hand operated pneumatic and electric jackhammers will be permitted only for breaking pavement and removal of masonry, concrete and boulders, or as otherwise directed by the Resident Engineer. The Contractor shall properly dispose of all materials excavated from test pits away from site. Test pits shall be excavated at locations shown on the contract drawings or as directed by the Resident Engineer. Additional test pits may be required and shall be excavated where required, as ordered by the Resident Engineer. All test pits shall be excavated to a depth and size necessary to locate the existing facilities. Sheeting shall be used when depth of excavation exceeds five (5) feet. The sheeting required shall be furnished and installed in full compliance with the State of New York and Federal Safety Codes requirements and as specified in contract, whichever is more stringent. Care shall be taken that no existing gas facilities or other structures are broken or damaged. All broken or damaged facilities shall be reported immediately to facility operator who shall decide whether such facilities shall be repaired or replaced by company forces or by City contractor and in conformance with "General Provisions; Gas Cost Sharing Work Paragraph No. 9". Contractor shall excavate all material encountered, including large masses of concrete, cemented masonry and boulders, as directed by the Resident Engineer. Any type of excavation protection used, shall satisfy the following:

   (a) Industrial Code Rule 753.
   (b) Prevent injury to workers and the public, and avoid damage to existing water, sewer, and gas pipes or other structures, and to pavements and their foundations, through caving or sliding of the banks of the excavation.

   Should it become necessary, as determined by the Resident Engineer, to enlarge any test pit in any dimension after sheeting has been placed, the Contractor shall remove portions of the sheeting, as necessary, enlarge the test pits as directed, and replace the sheeting without additional compensation for this work other than for the additional volume of material excavated.

B. Maintenance Of Test Pits: Excavated test pits shall be maintained free of debris and kept dry by the Contractor in order to permit the inspection and measurements and to determine the locations of facilities. In order to accomplish this, Contractor shall, upon completion of excavation and placement of sheeting (if depth greater than five (5) feet), furnish and install adequate steel plates and posting

over the excavated pits and shall temporarily remove all equipment debris and workers, and relocate barricades in order to open the full width of street to traffic during nonworking hours. The Contractor shall then, at no additional cost, relocate such barricades, barrels, cones and other warning devices and remove steel plates, as and when directed by the Resident Engineer to facilitate the inspection of exposed facilities. When work is being performed and the pits are not covered with steel plates, the Contractor shall provide complete and safe access to the test pits as may be required, and he shall provide construction barricades and maintain traffic at all times as shown or as directed by the Resident Engineer. Upon completion of test pit inspection by the Resident Engineer, the pit shall be backfilled by the Contractor as specified in contract, except that backfill material shall conform to contract specifications for such purpose.

C. Pavement And Sidewalk Restoration: After backfilling is completed, the Contractor shall construct a temporary pavement consisting of a minimum of four (4) inches thick asphaltic concrete mixture in roadway areas or a two (2) inches thick asphaltic concrete mixture in sidewalk areas in order to maintain existing pedestrian and vehicular traffic. This temporary pavement shall be maintained until permanent pavement and sidewalk replacement is constructed as specified in contract.

3. Measurements:

The quantity to be measured for payment shall be the number of cubic yards of material removed from within the limits of the pit dimensions as directed by the Resident Engineer. The volume occupied by existing pipes or other structures remaining within the maximum payment lines will not be deducted from the total volume measured except, where the cross sectional area of these facilities exceeds four (4) square feet. As determined by the Resident Engineer, the quantity measured for payment may be proportionate to a fair and reasonable estimate of gas responsibility in the total volume excavated.

4. Price To Cover:

The contract price bid per cubic yard for test pits shall cover all additional costs of labor, material, insurance, equipment, appliances and incidentals required to excavate test pits, including removal and disposal of excavated materials, sheeting, steel plating, backfill, compaction and temporary pavement and sidewalk restoration all in accordance with the specifications and as directed by the Resident Engineer. The price shall also include the cost of providing safe access to the excavation by facility operator for the performance of certain test to determine operating status of gas facilities prior to City work. The price shall also include support and protection of all gas facilities crossing excavation, paralleling and/or encroaching any face of excavation.

GAS COST SHARING STANDARD SPECIFICATIONS
SCHEDULE GCS-A

Average rate charged by utility companies to Disconnect and Reconnect Gas Services:

1. National Grid - $586.90 per Service/and Visit
2. Con Edison - $524.00 per Service/and Visit

IV - STANDARD SKETCHES; GAS COST SHARING WORK

Hereinafter attached are the following Standard Sketches for Gas Cost Sharing Work:

Sketch No. 1 - Support Requirements For Gas Mains And Services Crossing Excavation Greater Than 4' - 0" Wide At Any Angle

Sketch No. 1A - Support Requirements For Gas Mains Over 16" Diameter Up To And Including 48" Diameter Crossing Excavation At Any Angle

Sketch No. 2 - Typical Methods Of Measurement For Gas Crossings

Sketch No. 3 - Utility Crossings During Catch Basin Chute Connection Pipe Installation

Sketch No. 4 - Utility Crossings During Catch Basin Chute Connection Pipe Installation (Extra Depth)

Sketch No. 5 - Gas Main Encroachment On And/Or Parallel To Excavation Of Unsheeted Trench

GAS COST SHARING WORK (SKETCH NO. 1)

SUPPORT REQUIREMENTS FOR GAS MAINS AND SERVICES CROSSING EXCAVATION GREATER THAN 4'-0" WIDE AT ANY ANGLE

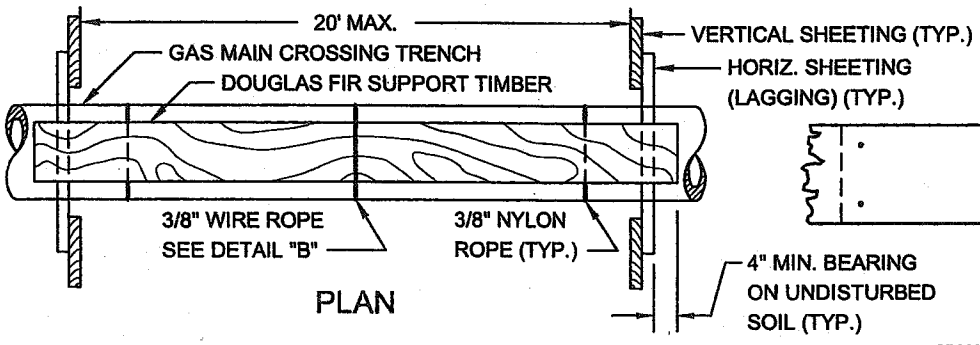

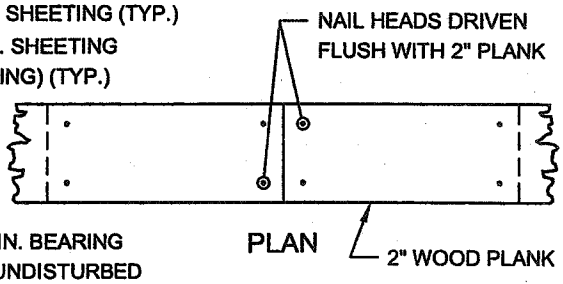

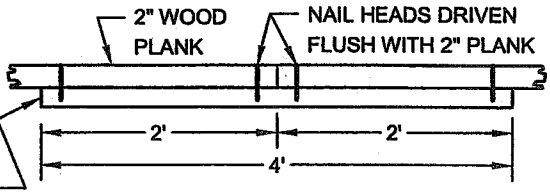

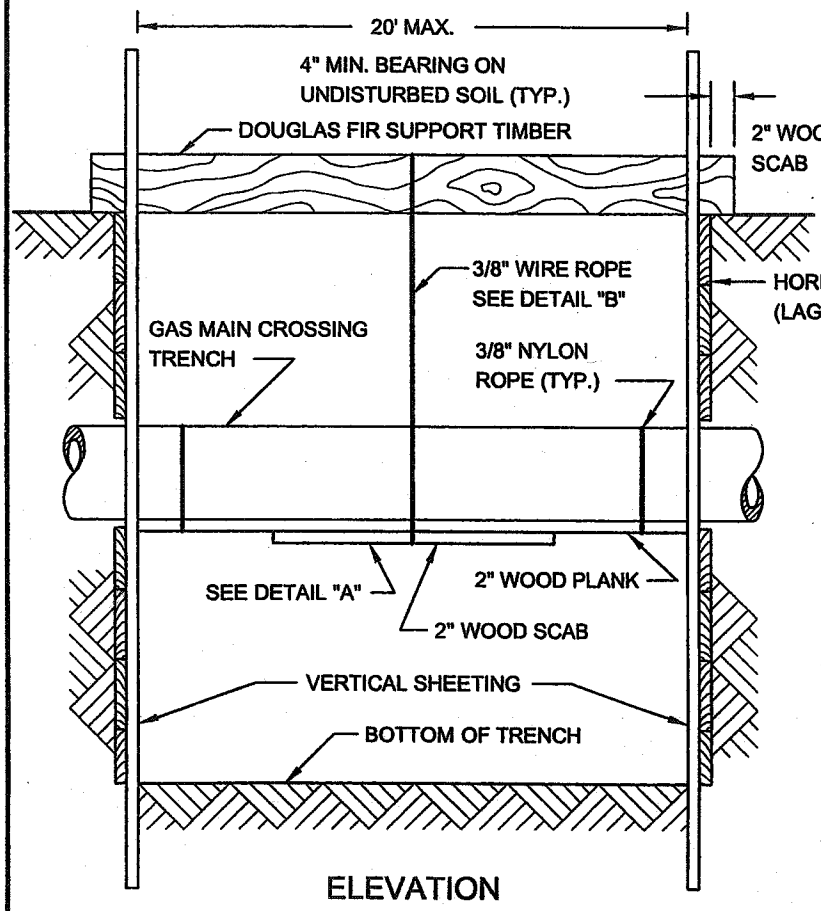

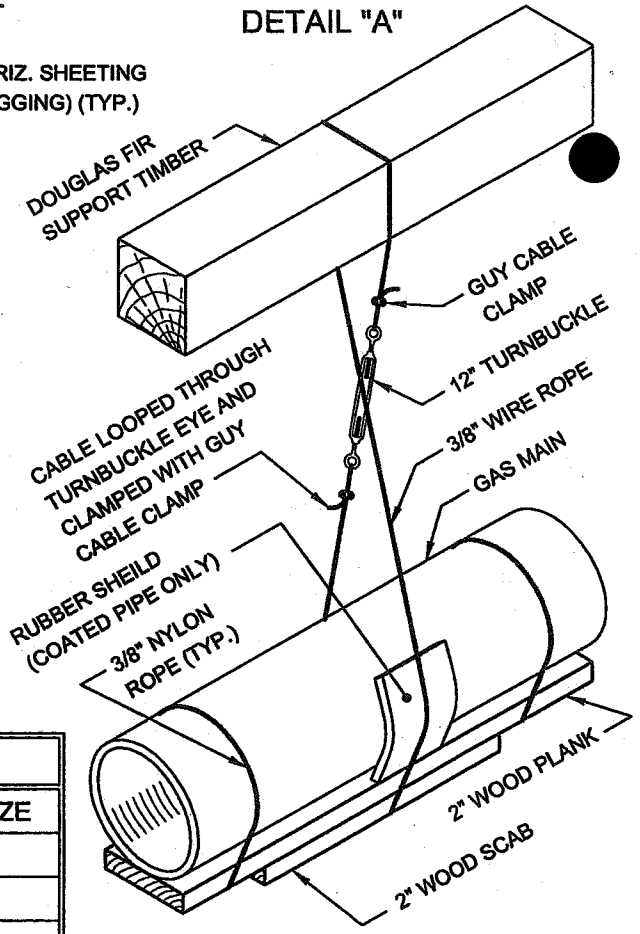

CABLE SUPPORT		TIMBER SUPPORT	
MAIN TYPE	SPACING	MAIN SIZE	TIMBER SIZE
CAST IRON	4' O.C. MAX.	UP TO 6"	6" X 6"
STEEL	10' O.C. MAX.	8" TO 10"	8" X 8"
PLASTIC	10' O.C. MAX.	12" TO 16"	10" X 10"

REVISED OCT. 2004 - L. ADRIEN
REVISED JUNE 1999 - J. WONG / W. PATALANO/P. MOY

GAS COST SHARING WORK (SKETCH NO. 1A)

SUPPORT REQUIREMENTS FOR GAS MAINS OVER 16" DIAMETER UP TO AND INCLUDING 48" DIAMETER CROSSING EXCAVATION AT ANY ANGLE

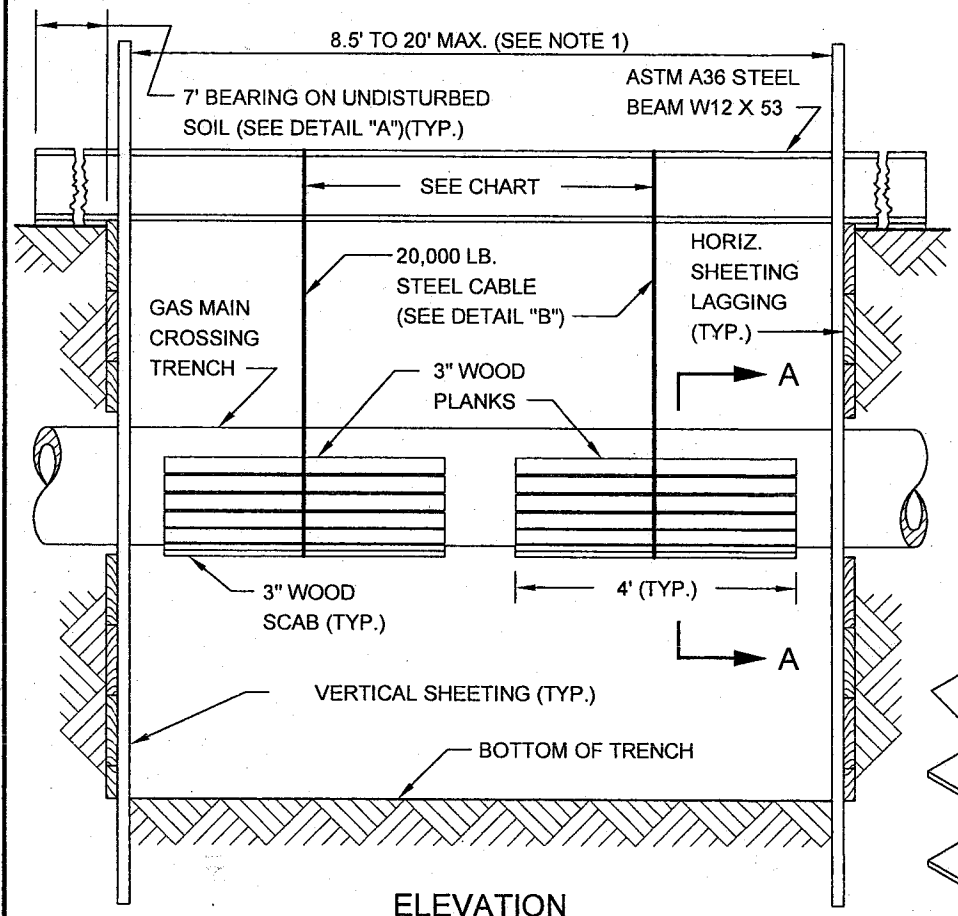

ELEVATION

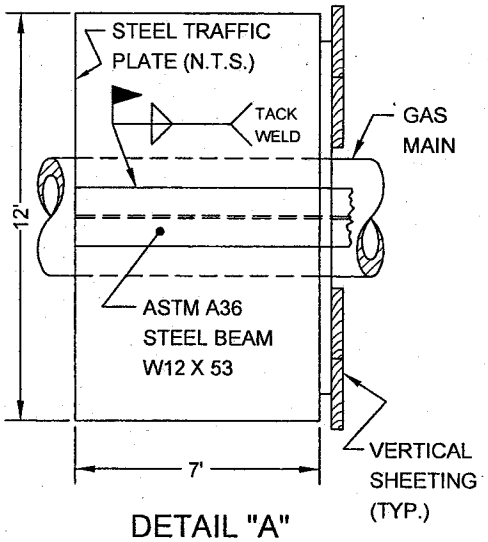

DETAIL "A"

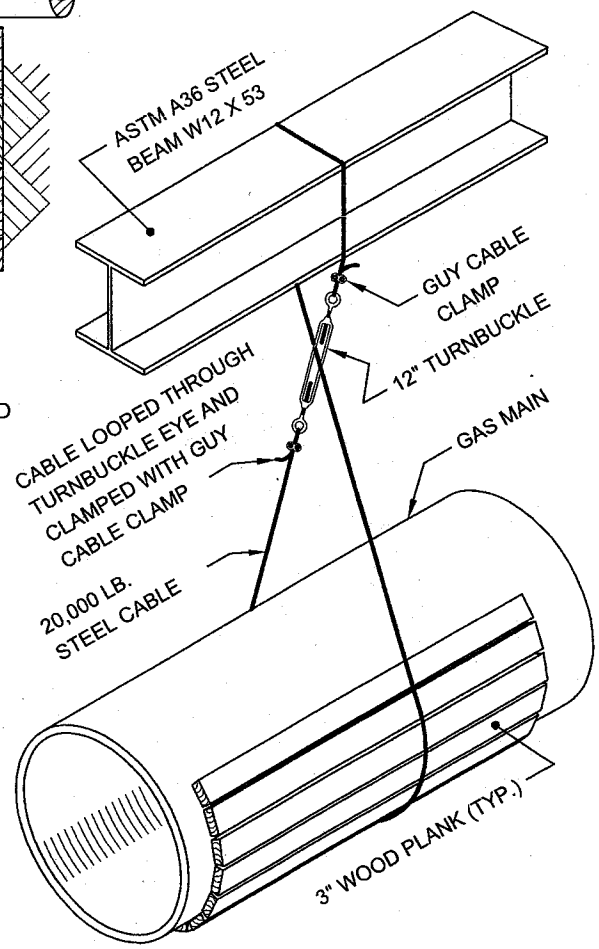

DETAIL "B"

CABLE SUPPORT	
MAIN TYPE	SPACING
CAST IRON	4' O.C. MAX.
STEEL	10' O.C. MAX.

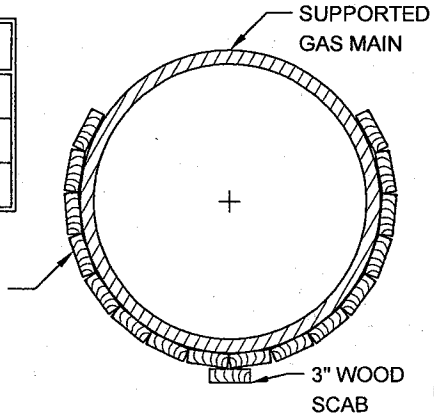

SECTION A-A

NOTES:

(1) NO SUPPORT IS REQUIRED FOR GAS MAINS OVER 16" DIA. UP TO AND INCLUDING 48" DIA. CROSSING TRENCHES LESS THAN 8.5' WIDE.

(2) UNDERMINE A MAXIMUM OF 8.5 L.F. OF CAST IRON GAS MAIN AT A TIME.

(3) SET STEEL CABLE OVER 3" WOOD PROTECTIVE PLANKS AND PLACE AN ADDITIONAL 3" SCAB ON THE BOTTOM OF THE GAS MAIN.

(4) ADJUST STEEL CABLE UNTIL DEAD WEIGHT OF THE UNDERMINED GAS MAIN HAS BEEN TAKEN UP BY THE OVERHEAD STEEL BEAM SUPPORT.

(5) ALL SUPPORTS AND STEEL CABLES CAN BE REMOVED ONLY AFTER THE REQUIRED BACKFILL (AROUND AND BELOW GAS MAIN) HAS BEEN COMPACTED IN ACCORDANCE WITH NEWYORK CITY STANDARDS AND AT THE DIRECTIONS OF THE ENGINEER.

REVISED OCT. 2004 - J. O'BRIEN
REVISED JUNE 1998 - J. WONG / W. PATALANO/P. MOY

GAS COST SHARING WORK (SKETCH NO. 2)

TYPICAL METHODS OF MEASUREMENT FOR GAS CROSSINGS

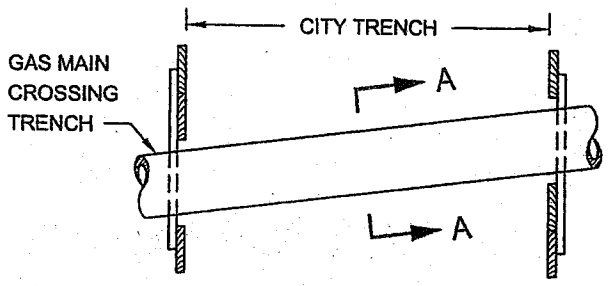

SINGLE FACILITY CROSSING

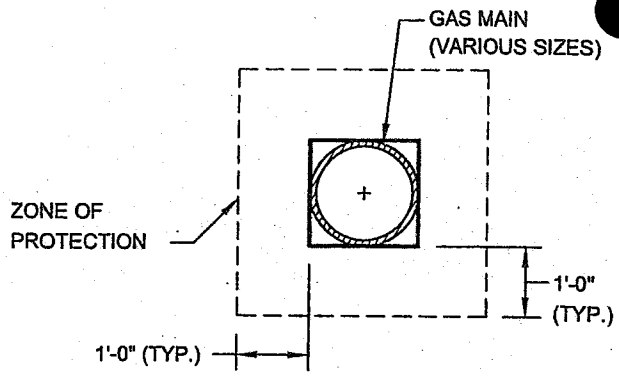

SECTION A-A

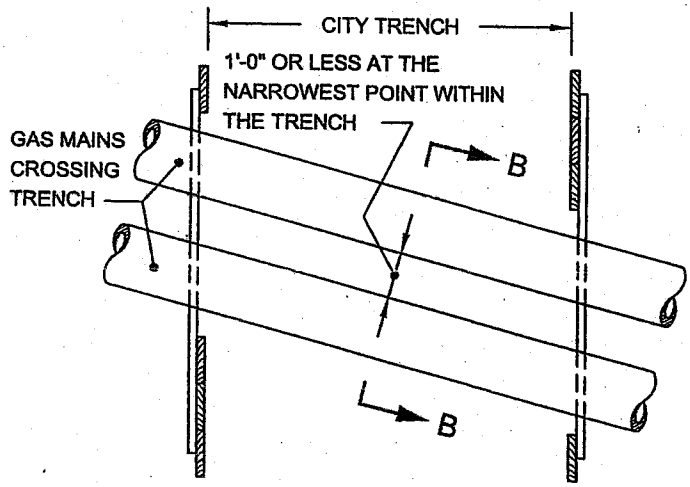

MULTIPLE FACILITIES
(GAS MAINS AT SAME ELEVATION)

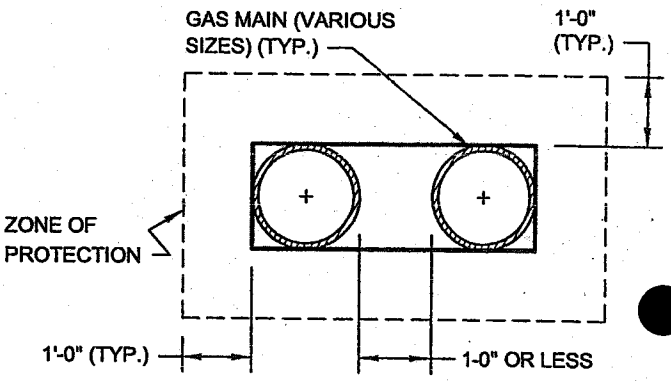

SECTION B-B

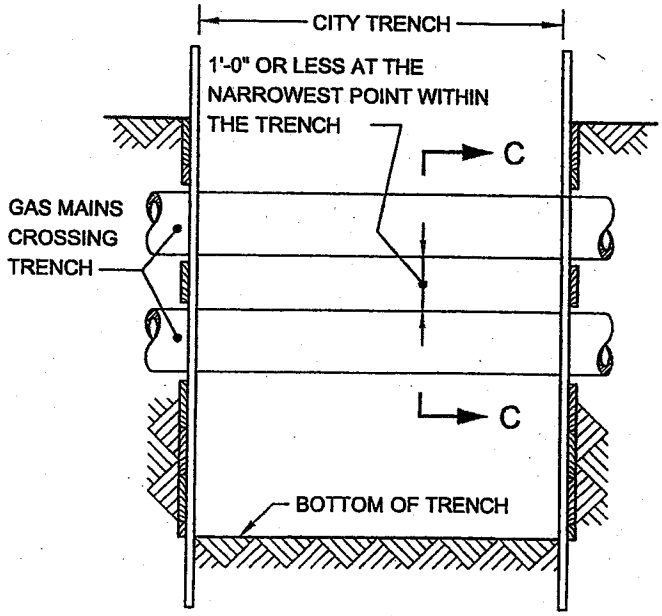

MULTIPLE FACILITIES
(ONE CROSSING AT DIFFERENT ELEVATIONS)

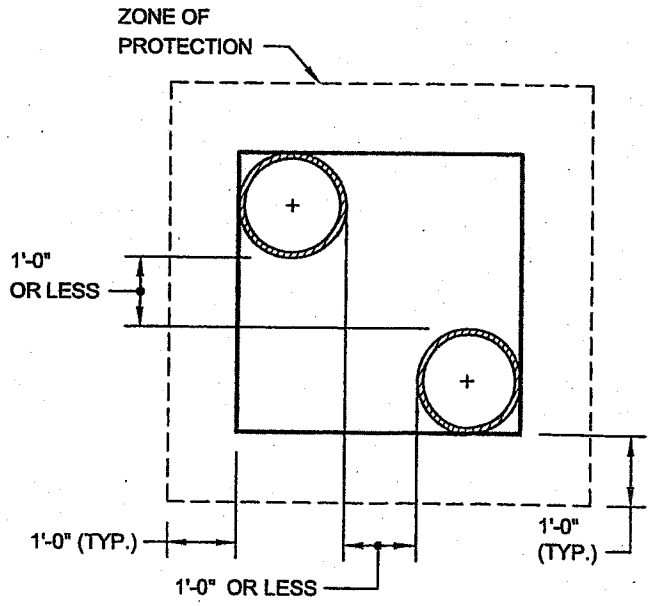

SECTION C-C

NOTE:

GAS MAINS MAY OR MAY NOT BE PARALLEL TO EACH OTHER.

REVISED SEPT. 2004 - L. ADRIEN
REVISED SEPT. 2004 - J. WONG/W. PATALANO/P. MOY

GAS COST SHARING WORK (SKETCH NO. 3)

UTILITY CROSSINGS DURING CATCH BASIN CHUTE CONNECTION PIPE INSTALLATION

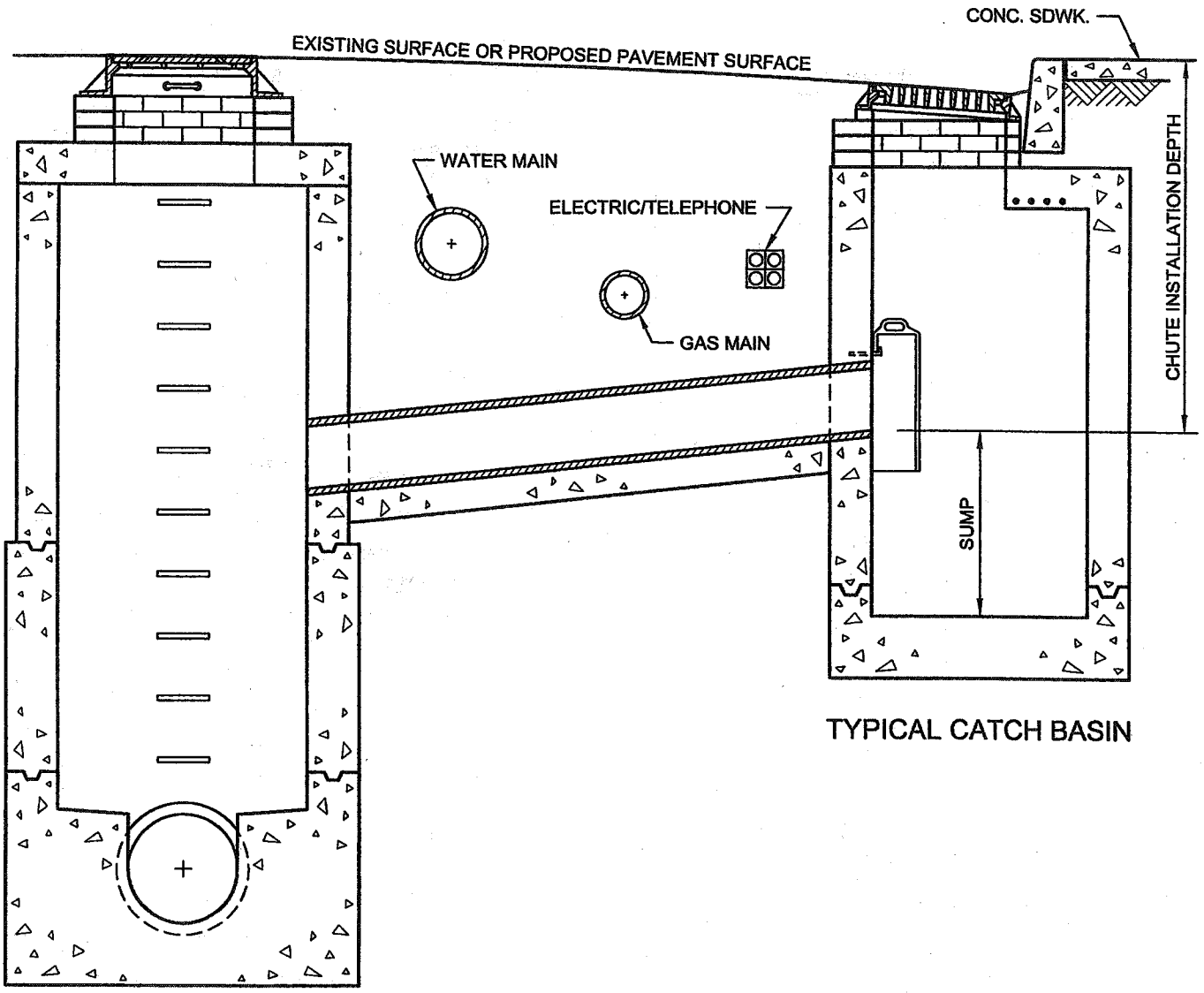

TYPICAL CATCH BASIN

TYPICAL SEWER MANHOLE

REVISED OCT. 2004 - I. ADRIEN
REVISED OCT. 1998 - J. WONG/W. PATALANO/P. MOY

GAS COST SHARING WORK (SKETCH NO. 4)

UTILITY CROSSINGS DURING CATCH BASIN CHUTE CONNECTION PIPE INSTALLATION (EXTRA DEPTH)

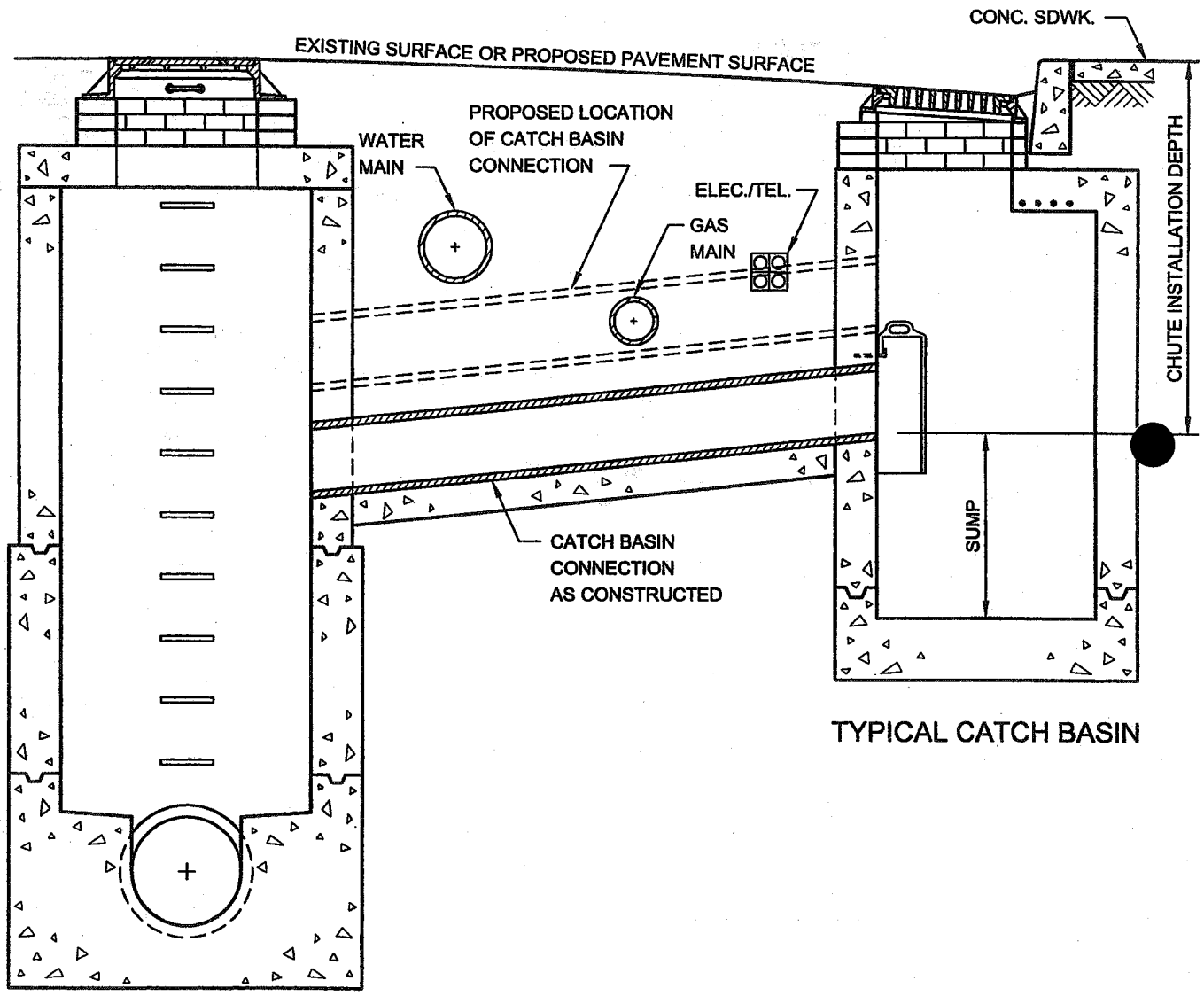

TYPICAL CATCH BASIN

TYPICAL SEWER MANHOLE

REVISED OCT. 2004 - L. ADRIEN
REVISED OCT. 1998 - J. WONG/W. PATALANO/P. MOY

GAS COST SHARING WORK (SKETCH NO. 5)

GAS MAIN ENCROACHMENT ON AND/OR PARALLEL TO EXCAVATION OF UNSHEETED TRENCH

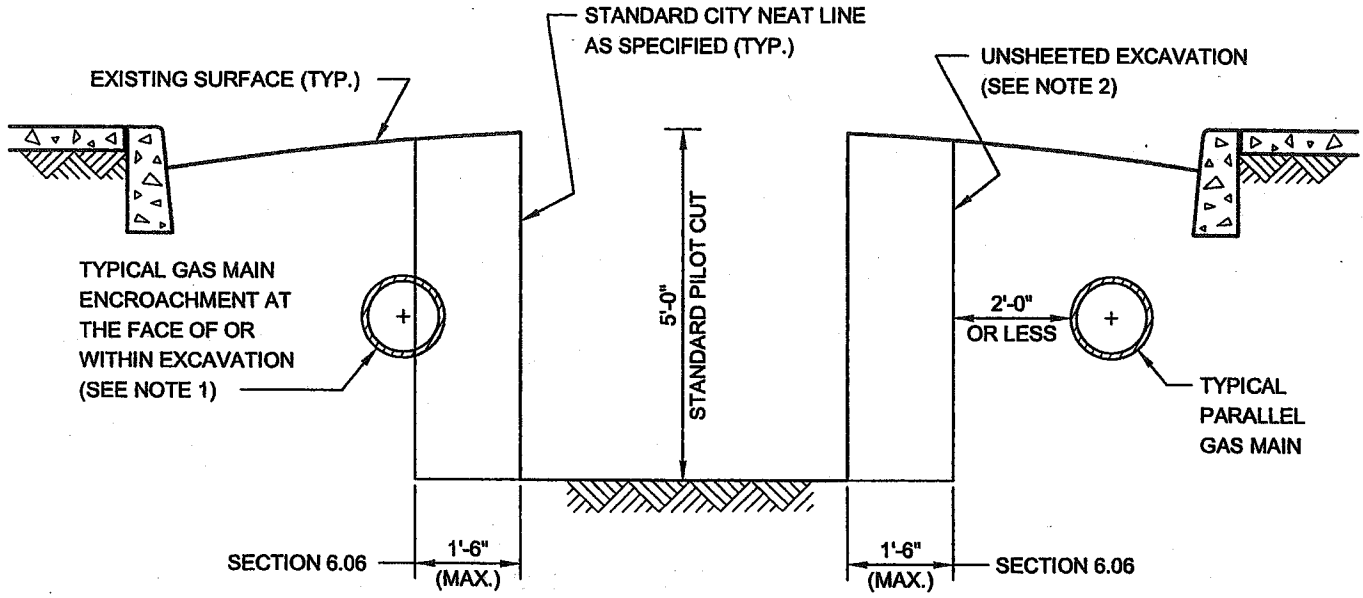

NOTES:

(1) GAS MAIN LOCATED AS SHOWN MAY HAVE TO BE REMOVED BY THE FACILITY OPERATOR PRIOR TO THE START OF CITY EXCAVATION, OTHERWISE, THE CONTRACTOR WILL BE PAID UNDER SECTION 6.06 FOR THE SAID WORK. IF GAS MAIN IS ABANDONED THEN SECTION 6.03 SHALL APPLY.

(2) EIGHTEEN (18) INCHES FROM STANDARD NEAT LINE IS THE MAXIMUM ALLOWABLE WIDTH OF AREA THAT MAY BE DISTURBED OR EXCAVATED DURING INSTALLATION OF CERTAIN TYPES OF SHEETING SYSTEMS THAT MEET THE REQUIREMENTS OF THE STANDARD SPECIFICATIONS OF THE DEPARTMENT OF DESIGN AND CONSTRUCTION OF THE CITY OF NEW YORK.

REVISED OCT. 2004 - L. ADRIEN
REVISED OCT. 1998 - J. WONG/W. PATALANO/P. MOY

NO TEXT THIS PAGE

V - PRELIMINARY GAS WORK TO BE PERFORMED BY FACILITY OPERATOR.

APPLICABLE TO ALL GAS DRAWINGS:

- ALL RELOCATION WORK SHOWN IN THIS ADDENDUM IS TO BE PERFORMED BY FACILITY OPERATOR.
- ALL SUPPORT AND PROTECTION WORK TO BE PERFORMED BY CITY CONTRACTOR
- IF ADDITIONAL INFORMATION IS NEEDED REGARDING THE FACILITY OPERATOR'S RELOCATION WORK, THE CONTRACTOR IS ADVISED TO CONTACT THE GAS COMPANY REPRESENTATIVE:

  Neville Jacobs Jr.
  NationalGrid Energy Delivery
  287 Maspeth Avenue
  Brooklyn, NY 11211
  718-963-5612

(NO TEXT IN THIS AREA, TURN PAGE)

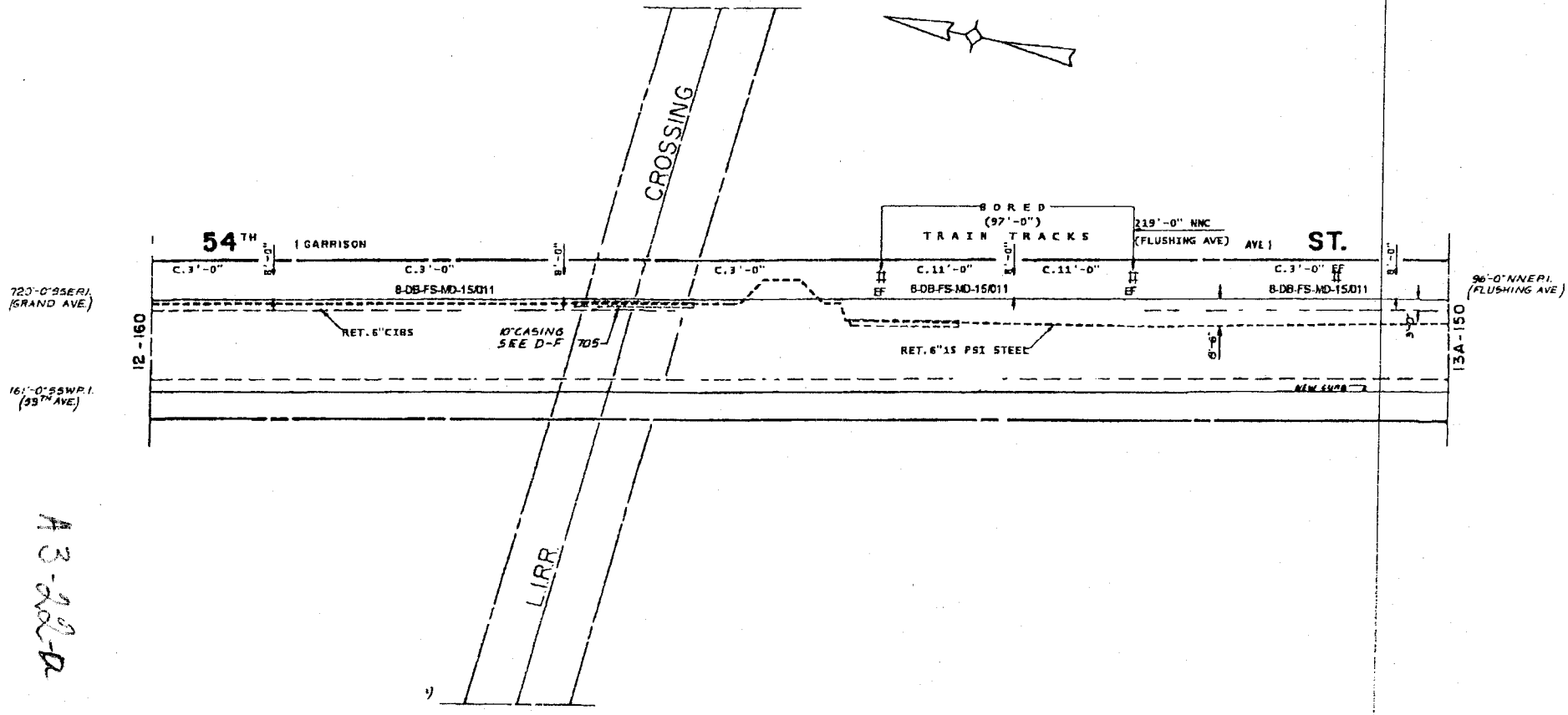

A3-22-A

VI - LISTING OF APPROXIMATE LOCATIONS OF EP-7 BID ITEMS QUANTITIES.

(NO TEXT IN THIS AREA, TURN PAGE)

SCOPE OF WORK
SUPPORT AND PROTECTION
FOR CONTRACT NUMBER QED1008

The City of New York Department of Design and Construction is planning to install sewers and/or water mains and all appurtenances in various locations in The City of New York along with all work incidental thereto.

6.01.8 - Support & Protect Gas Services Crossing Trenches and/or Excavations (Ea.)

3 in 54 Street btw Grand Ave & Flushing Ave

6.01.9 - Support & Protect Gas Main Crossing Water Main Up To 20" In Diameter (Ea.)

2 in 54 Street btw Grand Ave & Flushing Ave

6.03 - Removal Of Abandoned Gas Facilities. All Sizes (L.F.)

100 in Various Locations As Required

6.03.1 - Removal Of Abandoned Gas facilities with Possible Coal Tar Wrap. All sizes. (L.F.) (For National Grid work Only)

100 in Various Locations As Required

6.04 - Adjust Hardware to Grade Using Spacer Rings/Adaptors (Street repaving) (Ea.)

3 in Various Locations As Required

6.05 - Adjust Hardware to Grade by Resetting (Road Reconstruction) (Ea.)

2 in Various Locations As Required

6.06 - Special Care Excavation & Backfilling (C.Y.)

150 in various locations, as required, including but not limited to all gas services crossing unsheeted water main trenches.

6.07 - Test Pits For Gas Facilities (C.Y.)

50 in Various Locations As Required

END OF ADDENDUM NO. 3

This Addendum consists of thirty-two (32) pages

THE CITY OF NEW YORK
DEPARTMENT OF DESIGN AND CONSTRUCTION
INFRASTRUCTURE DIVISION
BUREAU OF DESIGN

PROJECT ID: QED1008

WATER MAIN AND SANITARY SEWER CONNECTION IN:
54TH STREET BETWEEN FLUSHING AVENUE AND GRAND AVENUE

INCLUDING WATER MAIN AND SEWER WORK
TOGETHER WITH ALL WORK INCIDENTAL THERETO
BOROUGH OF QUEENS
CITY OF NEW YORK

ADDENDUM NO.4

DATED FEBRUARY 28, 2013

THIS ADDENDUM IS HEREBY MADE A PART OF THE CONTRACT DOCUMENTS

1. The Contractor shall be responsible for compliance with all the provisions of the following Sections and Schedules, which are hereby made a part of the original contract documents:

   A. "SECTION U: Additional Contract Requirements Applying to Work Performed in the Presence of Privately Owned Utility Facilities" (Pages A4-3 through A4-13).

   B. Schedule U-1 (Page A4-14).

   C. Schedules U-2 (one for each Utility Company) (Pages A4-15 through A4-22).

   D. Section U-3 Page A4-23 (as per the Private Utilities reference document for SECTION U called "CET SPECIFICATIONS AND SKETCHES", dated November 2010), in this Addendum).

   E. Utility drawings consisting of: Con Edison - Overhead Electrical Condition Reports (1 drawing); Con Edison - Conduit & Duct Occupancy Plate & Low Tension Mains & Service Plate (1 drawing). Two drawings are attached to the Plans.

2. Each facility operator shall provide inspectors at the work site to inspect methods of interference work, verify quantities and items of Utility Work, and coordinate all phases of the facility operator operations.

3. In addition, the following statements are made to provide clarification of various paragraphs under Section U:

   A. Section U, ¶4, requires the Contractor to immediately commence negotiations with each Company for an Interference Agreement under which the Company will compensate the Contractor for any Interference Work which the Company does not elect to perform with its own forces or by specialty

contractors retained by the Company. Thus the Contractor is on notice that its work under the Contract may be affected by Interference Work performed by (a) the Contractor pursuant to a separate Interference Agreement with the Company, (b) the Company, or (c) partly by each.

B. Section U, ¶2, informs the Contractor that the duration of the Contract as shown in Schedule A includes the time which may be necessary for the Contractor to perform the necessary Interference Work.

C. The Contractor is hereby informed that the duration of the Contract as shown in Schedule A includes the time which may be necessary for the Company to perform whatever portion of the Interference Work which the Company elects to perform with its own forces or by specialty contractors retained by the Company.

D. Section U informs the Contractor that the City has entered into a Utility Agreement with the Companies regarding interferences to the City work in this Contract created by the facilities owned and/or operated by such Companies. Pursuant to this Addendum, a sample of the Utility Agreement letter as executed by the Companies is annexed on page A4-13, as an Exhibit to the Contract. Signed copies of those Utility Agreement letters are on file with NYCDDC.

E. The City has no contract with any of the Companies for work on or adjacent to the site of work under this Contract, and the Companies are not "Other Contractors" as defined for the purposes of this Contract. The Contractor is reminded, however, that pursuant to Section U, ¶4, the City will not compensate the Contractor for any direct and/or indirect costs related to Interference Work, regardless of whether such Interference Work is covered by an Interference Agreement between the Contractor and the Company or is performed by the Company using its own forces or by specialty contractors retained by the Company.

F. Section U, ¶14, provides that the provisions of Section U are material provisions of the Contract and that the Contractor's failure to comply with the procedures set forth in Section U are sufficient for the Commissioner to declare the Contractor in default pursuant to Article 48 of the Contract.

Pursuant to this Addendum, the Contractor is informed that the Performance Bond required of the Contractor pursuant to the Contract is not deemed to guarantee performance of any of the Interference Work.

Section U: Additional Contract Requirements Applicable to Work Performed in the Presence of Privately Owned Utility Facilities

The Contractor is hereby notified that pursuant to the law and franchise agreements issued by the City, certain private utility and public service companies named in Schedule U-1 ("the Companies") own and/or operate surface and/or subsurface facilities within the limits of this contract. The existence of these facilities impacts the productivity of the City work called for in the contract. In order to improve coordination of the City construction with the private utility facilities owned and/or operated by the Companies named in Schedule U-1, Article 1.06.30 of the Standard Highway Specifications of the New York City Department of Transportation, Dated November 1, 2010; Articles 1.06.14 through 1.06.17 of the General Provisions of the Standard Water Main Specifications of the New York City Department of Environmental Protection, dated August 1, 2009; and/or Articles 1.06.14 through 1.06.17 of the Standard Sewer Specifications of the New York City Department of Environmental Protection, Dated August 1, 2009; as applicable, are amended and will be implemented as follows:

1. Pre-engineering:

The anticipated scopes of private utility facilities interferences and anticipated work items and specifications are included in this contract. The locations of these interferences are indicated on the plans and/or listed in the specifications for this contract, and a schedule of estimated quantities by type of interference expected to be encountered within the limits of this project area have been listed on Schedule U-2. In addition, in Section U-3 the Companies have provided standard details and methods for supporting, protecting, relocating, and/or working around their facilities when they are in interference with City contract work.

2. Means and methods for City work:

a) The Contractor is hereby notified that the utility interferences identified on the plans and/or listed in the Specifications to be known conditions which may impact the performance of, and/or interferes with, City work. The contractor will be required to perform such utility work as directed by the Resident Engineer in order to clear all utility interferences from the project site as required for satisfactory completion of City work within specified contract schedule.

b) In areas serviced by overhead electric system, the contractor understands and by bidding for this contract agrees that he/she has reviewed the section 'U' package and that he/she will be required to perform the public work in the presence of energized

electrical overhead lines and appurtenances located in areas adjacent and/or within the project area. As a consequence he/she will select means and method of construction appropriate to maintain the safety clearances required or as permitted by contract specifications (e.g. "CET 350 – Overhead Accommodation Protection of Overhead Facilities, Poles, and Appurtenances") in order to avoid damaging the insulation or shielding of these lines and also to prevent knocking them down. The duration of the contract as shown in Schedule A thus includes the time which may be necessary for the Contractor to remove, repair, protect, support, shift, relocate, temporarily remove and replace, work around and/or work in the presence of the Companies' facilities ("Interference Work") as described on the plans and/or specifications of the contract during the progress of the City work.

3. Field inspection prior to construction:

Prior to the start of any contract work in areas serviced by overhead electric lines, and after the award to the apparent low bidder for this contract, the contractor must request a field walk of the project area along with the operator of the overhead electrical facilities and the DDC Engineer-In-Charge. At that time the facility operator, pursuant to contract specification (e.g. "CET 350 – Overhead Accommodation Protection of Overhead Facilities, Poles, and Appurtenances") will confirm the type and condition of the overhead electrical lines and the sufficiency of their insulating properties with respect to the means and methods proposed by the contractor. The contractor must be prepared to describe in enough details his/her proposed means and methods of construction operations in order to anticipate the likelihood that electric lines insulation would be cut or otherwise compromised. Also such details will allow the facility operator to anticipate the need for added insulation and/or shielding of non-insulated lines.

4. Compensation for interference work:

Compensation for Interference Work is a matter of adjustment between the Contractor and each private utility company located within the limits of the project area and whose utility facilities are affected by City contract work. In particular, the City will not compensate the Contractor for any direct and/or indirect costs related to Interference Work, including, but not limited to, lost profit, increased overhead, or any other impact costs. Upon receipt of a Notice of Award from the City, the Contractor shall immediately commence negotiations with each of the Companies concerning the manner in which and the price for which the Contractor, through its own forces or by others hired by it, will perform and be paid by the Company for all

necessary Interference Work as defined above that the Company(ies) choose(s) not to perform with its(their) own forces or by specialty Contractors hired by it (them) (as per "Interference Agreement"). (Specialty contractors' work is limited to (i) insulation installation and removal, (ii) live gas and steam work, (iii) cleanup and disposal of hazardous materials, (iv) splicing live electrical and telecommunications facilities, and (v) work not traditionally performed by general construction contractors.

5. Interference Agreement:

1. The Companies have provided estimate of the quantity of each of the types of interferences expected to be encountered in the contract in Schedule U-2. Although the parties may negotiate an Interference Agreement in any format or manner they deem fit, the Contractor is hereby advised that the Companies have indicated to the City that they will agree to compensate the Contractor on a unit price basis according to the Quantity and Types of Interferences expected to be encountered on this Contract as stated in Schedule U-2.
2. Furthermore, in Section U-3, standard unit work measurement and payment provisions are specified and shall apply only if the Contractor and affected Utility companies enters into a unit price based Interference Agreement, otherwise the unit of work measurement, and payment provisions set forth in Section U-3 shall not apply. The Contractor shall notify the City upon concluding an Interference Agreement with each of the Companies, which shall be binding and final once concluded.

6. City contract work to continue without Interference Agreement :

If, prior to the start of construction, as directed by the City's Order to work / Notice To Proceed (OTW/ NTP) date any of the Companies and the Contractor have not concluded an Interference Agreement as described above, then the City construction will proceed as ordered and the Contractor will be directed by the Resident Engineer to perform the City work on Time, Material and Equipment basis (T&M) as specified in standard City contract agreement Article 26.2. T&M records will include identification of types of utility facilities interfering with City work, utility facility owners, specifying the nature and quantity of any materials, plant and equipment furnished or used in connection with the performance of such work and crew size, such as: name and number of each worker employed on such work. T&M records will also indicate the hours of active time, standby time and idle time. The Company (ies) and the Contractor will maintain separate records of the actual quantity and cost of labor, materials, and equipment expended, and will provide copies of this information to the other party on a

daily basis for reconciliation. These T&M records along with cost evaluations will be submitted daily to the Resident Engineer for review and approval. The total cost of City work will be based on quantity of work performed multiplied by unit price contract bid items. The total interference cost will be calculated as the difference between the total T&M cost and total cost for City work. The Resident Engineer will conduct a monthly reconciliation session of the daily T&M records with the affected Company (ies) and contractor. If the contractor and affected utility companies cannot reconcile their T&M records, by the last day of each month, then the Resident Engineer will submit the approved City's T&M records along with total cost evaluations to the DDC Director of Construction who will review these records and recommend approval and validity certification by the DDC Deputy Commissioner.

1. Copies of the DDC approved and certified T&M records will then be transmitted by the DDC to the contractor and the utility companies. These certified records may be used by the contractor for compensation claims against the responsible private facility owners, or may be used by any party as supporting documentation in dispute regarding compensation for performing Interference Work as identified in Schedule U-2. The contractor will be required to perform City work while invoices are submitted by the contractor to the Utility companies for payment within 30 days, or while compensation disputes between contractor and affected company (ies) are submitted to Binding Arbitration process described in Paragraph 10.
2. All issues related to utility work and/ or delays due to compensation disputes or claims against utility companies are not allowable as justification for granting contract time extensions. The City may assess liquidated damages specified in the contract for net overall delays suffered by City contract work as a result of utility issues, disputes and claims.
3. The standard City contract dispute resolution process specified in Article 27 "Presentation of disputes to Commissioner", of the standard City contract agreement is not applicable to any disputes related to utility work and/ or compensation for such work or claim against utility companies. Utility work issues, disputes and claims may only be submitted to Binding Arbitration process described in Paragraph 10.
4. The contractor will notify the Resident Engineer when utility capital work not specified in Schedule U2 and/ or for utility work that require the intervention of company utility specialty crews causes excessive contractor's labor and equipment standby or idleness and, thereby jeopardizing the City project schedule. The Resident Engineer will submit

the facts to the DDC Director of construction who will recommend to the Deputy Commissioner regarding the issuance of a "48 hours notice" to the concerned utility company as authorized by the New York City administrative Code Section 19-143 and/ or Section 24-521 as applicable.

5. Utility delays caused by utility capital work not listed in Schedule U2 and/ or by unavailability of utility specialty crews cannot be discounted for earning any contractual bonus when such bonus clause is included in a contract. However, if such specified bonus is not earned or disallowed by the City or if the City assesses specified liquidated damages as a result of such excessive delays, the contractor may seek damages from the responsible utility company (ies).

7. ***Extra utility work with Utility Agreement:***

If during construction the Contractor encounters utility facilities interferences or utility scope of work that it believes is not covered by the Interference Agreement as described above, then the Contractor shall immediately notify the Company in writing, with a copy to the City, describing the nature and location of the extra work in question. The Company then has five (5) business days to investigate the conditions and then:

1. Advise the Contractor and the City in writing that no interference with its facilities exists at the location in question, and hence that the Contractor may proceed with City work without providing for any impact from Company facilities;
2. Advise the Contractor and the City in writing that the Interference Agreement negotiated pursuant to Paragraph (6), above, provides for the scope of work encountered, specifying the exact unit items and/or terms of the agreement that cover the work;
3. Advise the Contractor and the City in writing that it intends to perform the necessary utility Work with company forces or with its own contractor including, but not limited to, relocating its facility out of the way of the proposed City work. In this case, the Company shall provide a written schedule for the performance of the utility work it proposes to perform, which shall be subject to approval by the City based on its impact to the Contractor's currently approved progress schedule. Upon approval of the Company's schedule by the City, the Contractor shall provide access to the worksite to the Company and/or any contractors hired by it to perform this utility work. If necessary, the City may grant a contract time extension for delays caused by the performance of such utility work by the company.

4. Reasonably specify in writing the scope of work to be performed by the Contractor on behalf of the Company that is not covered under the Interference Agreement negotiated pursuant to Paragraph (6), including, but not limited to, relocating, supporting, and/or protecting the Company's facilities, and/or shifting the City facility if approved by the Resident Engineer, and/or otherwise changing its operations to work in the presence of the Company's facilities. Should the Company elect this option, it must adequately define and provide an initial price offer for the work required to be performed.

8. Means and Methods for utility work:

Upon receipt of the Company's determination pursuant to paragraphs 7.2, or 7.4, above, the Contractor shall determine reasonable means and methods of performing the work defined by the Company. These means and methods are subject to approval of the Company, which shall not be unreasonably withheld. If, however, the Company objects to the Contractor's proposed means and methods then it shall define an alternate method of construction. Upon receipt of the Company's approval or its proposed alternate method of construction, the Contractor shall commence performance of the work defined by the Company as soon as possible, and shall perform the work in a good, workmanlike, and efficient manner, using the means and methods approved by the Company, in order to permit the City work to proceed in the most expeditious manner possible, but without imposing unreasonable and/or unnecessary costs on the Company. It is expressly understood by all parties that the City's rights pursuant to Article 4 of the Contract apply to Utility Work performed pursuant to this section.

9. Disputed utility work covered by a utility agreement:

The City Work will continue as described in paragraph 6 above. In the event of any dispute between the Company (ies) and the Contractor regarding any issue related to the performance of, or payment for, utility work, including, but not limited to, any indirect or impact costs incurred by the Contractor due to the Utility Work and/or to the existence of facilities owned or operated by the Company (ies) on the line of the work. The Company (ies) and the Contractor hereby agree to submit to each other a "Final Offer," in writing, by certified mail. Each party shall then have three business days to consider each other's Final Offer. In the event that neither party accepts the other's Final Offer within those three days, the Company (ies) and the Contractor agree to immediately submit the dispute to binding arbitration as described in Paragraph 10. During the pendency of any arbitration, the Company (ies) and the Contractor shall maintain separate records of the actual quantity and cost of labor, materials, and equipment expended, and to provide copies of this information to the other party on a daily

basis for reconciliation. Any and all disagreement with the records maintained and provided by the other, must be documented in writing to all parties. However, these records are solely for the benefit of presentation to the arbitrator, whose decision may not necessarily be based on these records and in any event is final. Both parties should be aware that the City will not confirm or deny the accuracy of any records maintained by either party for Utility work performed pursuant to a Utility Agreement. While the arbitration is pending, the Company shall pay the Contractor on a monthly basis, based on the price offered by the Company to the Contractor for the performance of the work.

10. Arbitration of utility work:

The arbitration of the issues described above shall be conducted pursuant to the Construction Industry Arbitration Rules of the American Arbitration Association (hereinafter "the Rules" and "AAA") in effect on the date the arbitration is initiated except as set forth herein. The arbitration award shall be final and binding upon the parties to the arbitration and judgment upon the award may be entered in a court having jurisdiction.

(a) Once an arbitrator(s) has been appointed by the AAA, the arbitration shall be scheduled as promptly as possible given the arbitrator(s) and the parties' schedules.

(b) No later than seven days prior to the first arbitration hearing, Company and Contractor shall submit to the arbitrator(s), and to each other, a summary of each party's respective position and such other information as is deemed appropriate, along with a copy of each party's Final Offer as specified in paragraph 9.

(c) The arbitration shall be conducted and concluded in two days.

(d) On the morning of the first day of the arbitration, Contractor and/or representatives shall have 3 ½ hrs to make a presentation of its claim to the arbitrator. During its presentation, Contractor shall not be permitted to produce any documents or cost records which have not already been provided to the Company. Contractor shall be permitted to produce any analysis or description of its claim which has been prepared for the purpose of its presentation.

(e) After lunch, Company and/or its representatives shall have two hours to ask Contractor questions about its claim and its presentation. Thereafter the arbitrator(s) shall have two hours to ask Contractor questions about its claim and its presentation.

(f) On the morning of the second day of the arbitration, Company and/or its representatives shall have 3 ½ hours to make a presentation of its claim to the arbitrator. During its presentation, the Company shall not be permitted to produce any documents or cost

records which have not already been provided to the Contractor. The Company shall be permitted to produce any analysis or description of its claim which has been prepared for the purpose of its presentation.

(g) After lunch, Contractor and/or its representatives shall have two hours to ask Company questions about its claim and its presentation. Thereafter the arbitrator(s) shall have two hours to ask Company questions about its claim and its presentation.

(h) Subject to the above time limitations, the arbitrator(s) may conduct the arbitration in such manner as the arbitrator(s) deems reasonable.

(i) The arbitrator(s) shall then have one week to select in writing, as the arbitrator ('s) award, that party's Final Offer which appears to be more reasonable, based on the presentations at the arbitration hearings.

(j) The arbitrator shall have no discretion to grant an award other than one of the two Final Offers submitted by the parties.

(k) Any award for work that has already been performed shall be paid on the 7th day after receipt of the arbitrator's decision, or on the 30th day after completion of the work, whichever is later. Payment for work not yet completed at the time of the arbitrator's decision shall be paid within 30 days of completion of work. Interest shall accrue from the date payment is due at the rate of 9% per annum. Either party may cause judgment to be entered in accordance with the arbitrator(s) decision in a court in the State of New York, County of New York.

(l) The arbitrator's fees and any other costs of the arbitration shall be initially shared equally by Company and Contractor. The non-prevailing party shall then pay all arbitrator's fees and costs of the arbitration and shall reimburse the prevailing party for its share of such fees and costs theretofore paid.

(m) The parties may, at any time, settle any matter submitted to arbitration.

11. Order-out waiver:

The Contractor and all subcontractors hired by it, if an Interference Agreement is executed as specified between the concerned parties, agree to waive any rights they may have, if any, under law, contract or otherwise to compel the City to assert any right the City may have, including the issuance of any directives required under the New York City Administrative Code, Section 19-143 and Section 24-521, to require any or all of the Companies to maintain, repair, replace, protect, support, shift, alter, relocate, and/or remove utility facilities in connection with the work to be performed under this contract. However, nothing in this section shall preclude the City from exercising its rights under the Law to issue such a directive to the Company.

12. Cost of insurance:

Each of the named Companies, at their option and if an Interference Agreement is executed as specified between the concerned parties, may be named as an additional insured on all insurance policies required to be maintained under this contract. In the event that a Company opts to be so named as an additional insured, the actual incremental cost, if any, to the Contractor of providing such insurance coverage shall be borne by that Company. The Contractor shall provide a written statement from its insurance provider documenting the actual cost of this added coverage to the Company. Under no circumstances shall the cost of insurance coverage on behalf of any Company be borne by the City. Nothing in this paragraph shall be interpreted to imply the City's acceptance of any additional responsibility or liability for any matter related to the performance of Utility Work. In particular, the Company and the Contractor bear joint and full responsibility to ensure that any Utility Work performed by the Contractor is in compliance with all applicable government and Company regulations.

13. Cost of utility interference work:

The Companies, by virtue of a prior agreement with the City, have agreed to perform their obligations described in this section. It is expressly understood that the cost of Utility Work shall not be a charge against the City, but shall be a matter for adjustment between the Contractor and the Company or Companies concerned. The City and the Contractor agree that the Companies are third party beneficiaries of this section of the contract, if a Utility Agreement is executed between the contractor and utility company (ies). The provisions of this section shall govern in all cases where Company property interferes with or is about to be disturbed by the City work, notwithstanding any other provision of the Contract, except for Natural Gas transmission/distribution facilities covered subject to the Gas Facility Cost Allocation Act (GFCAA) and covered separately in this contract.

14. Default declaration:

The Contractor agrees that the provisions of this section are material provisions of the contract, and that the Contractor's failure to comply with the procedures set forth above are sufficient for the Commissioner to declare the Contractor in default pursuant to Article 48 of the Contract.

15. NYS Labor Law:

The Contractor is hereby advised that New York State Labor Law applies to public work. The work described in this Section U of the contract performed by utility company (ies) with their own forces or vendors hired by such company (ies) is not public work.

16. Facility operators:

The insurance requirements in Paragraph 12 of this Section U apply to: (i) additional Companies, if any, who were not named in Schedule "A" but which have executed a Utility Agreement with the contractor for utility work; and (ii) additional coverage, if any, paid for by Utility Companies whose utility facilities are located within the project limits, that they may require for the utility work pursuant to an utility agreement between the contractor and such utility companies.

[End]

"STANDARD UTILITY LETTER OF AGREEMENT"

(Name)
Deputy Commissioner, Infrastructure Division
Department of Design and Construction
30-30 Thomson Avenue
Long Island City, NY 11101

RE: City Work Performed in the Presence of Private Utility Facilities
Project No: _____

Dear (Name):

This letter is to certify that _____, has requested the inclusion of the attached "Section U: Additional contract requirements applying to work performed in the presence of privately owned utility." The company agrees to abide by the terms of this Section U and to submit a schedule listing the scope of work, including the items and estimated quantities, and types of utility facilities to be supported and protected at the company's own expenses due to interferences with the Public work.

Sincerely,

_____
By: Authorized Company Representative

_____
Title

NOTARY PUBLIC

CERTIFIED AS TO FORM
AND LEGAL AUTHORITY:

By: _____

SCHEDULE U-1

QED-1008

FOR THE CONSTRUCTION OF TRUNK MAINS

Listing of Companies for this Contract

COMPANY NAME	CONTACT NAME	TELEPHONE NUMBER
Consolidated Edison	Theresa Kong	(212) 460-4834
Time Warner	John Piazza	(718) 888-4261
Verizon	Aubrey Makhanlal	(718) 977-8165

SCHEDULE U-2

FOR INFORMATION ONLY

ENGINEER'S ESTIMATE OF QUANTITY AND TYPES OF INTERFERENCE

FOR CONSOLIDATED EDISON

QED-1008

54TH STREET BTWN GRAND AVE AND FLUSHING AVE

CET ITEM	DESCRIPTION	UNITS	ESTIMATED QUANTITY
CET 108.1	UTILITIES CROSSING TRENCH FOR WATERMAIN UP TO AND INCL. 12" DIAMETER (TYPE .1)	EA	1
CET 113.1	UTILITIES CROSSING TRENCH FOR WATERMAIN OVER 54" AND UP TO 60" (TYPE .1)	EA	7
CET 330E-A.2	SUPPORT & PROTECT ELEC, GAS & STEAM FAC. DURING EXCAVATION OF CITY TRENCH WHEN FAC. LIE W/IN TRENCH LIMITS W/O SHEETING(TYPE .2)	L.F.	170
CET 350	OVERHEAD ACCOMMODATION, PROTECTION OF OVERHEAD FACILITIES AND APPURTENANCES	L.S.	1
CET 351	INSTALL AND REMOVE "A" FRAME ON UTILITY POLES	EA	2
CET 401	TRENCH EXCAVATION FOR ADJUSTMENT OF UTILITIES	C.Y.	18
CET 402.1	EXISTING OCCUPIED CONCRETE ENCASED CONDUITS PLACED IN FINAL POSITION W/O CONCRETE ENCASEMENT	L.F.	1,020
CET 406	EXCAVATION FOR UTILITY STRUCTURE	C.Y.	12
CET 450.3	CONSTRUCTION FIELD SUPPORT REQUIRING AVERAGE MEDIUM SIZE CREW CAPABLE OF PERFORMING VARIOUS TASKS (TYPE .3)	CRHRS	16
CET 501	REMOVAL OF ABANDONED MASONRY FOR ELEC. AND TEL. FACILITIES	C.Y.	1
CET 603E.1	INSTALL UTILITY CONDUITS PLACED IN FINAL POSITION WITHOUT CONCRETE ENCASEMENT	L.F.	6
CET 638N	INSTALLATION OF FIELD CONSTRUCTED UTILITY STRUCTURE	C.Y.	12
CET 638R	BREAK OUT AND REMOVE UTILITY STRUCTURE	C.Y.	13

CET 108.1	UTILITIES CROSSING TRENCH FOR WATERMAIN UP TO AND INCL. 12" DIAMETER (TYPE .1)	EA

At the following locations:

N/S 54th Street, E/O Railroad Tracks

Total quantity for CET 108.1 = 1

CET 113.1	UTILITIES CROSSING TRENCH FOR WATERMAIN OVER 54" AND UP TO 60" (TYPE .1)	EA

At the following locations:

S/S 54th Street, W/O Railroad Tracks
S/S 54th Street, E/O Railroad Tracks
S/S 54th Street, E/O Railroad Tracks

Total quantity for CET 113.1 = 7

CET 330E-A.2	SUPPORT & PROTECT ELEC, GAS & STEAM FAC. DURING EXCAVATION OF CITY TRENCH WHEN FAC. LIE W/IN TRENCH LIMITS W/O SHEETING(TYPE .2)	L.F.

At the following locations:

S/S 54th Street, W/O Railroad Tracks
S/S 54th Street, E/O Railroad Tracks

Total quantity for CET 330E-A.2 = 170

CET 350	OVERHEAD ACCOMMODATION, PROTECTION OF OVERHEAD FACILITIES AND APPURTENANCES	L.S.

At the following locations:

S/C 54th Street, W/O Railroad Tracks
AS SHOWN ON CONTRACT DOCUMENTS

Total quantity for CET 350 = 1

CET 351	INSTALL AND REMOVE "A" FRAME ON UTILITY POLES	EA

At the following locations:

S/S 54th Street, W/O Railroad Tracks
S/S 54th Street, E/O Railroad Tracks

Total quantity for CET 351 = 2

CET 401 — **TRENCH EXCAVATION FOR ADJUSTMENT OF UTILITIES** — **C.Y.**

At the following locations:

S/S 54th Street, W/O Railroad Tracks
S/S 54th Street, E/O Railroad Tracks
AS ENCOUNTERED AND DIRECTED BY A CON EDISON REPRESENTATIVE

Total quantity for CET 401 = 18

CET 402.1 — **EXISTING OCCUPIED CONCRETE ENCASED CONDUITS PLACED IN FINAL POSITION W/O CONCRETE ENCASEMENT** — **L.F.**

At the following locations:

S/S 54th Street, W/O Railroad Tracks
S/S 54th Street, E/O Railroad Tracks
AS ENCOUNTERED AND DIRECTED BY A CON EDISON REPRESENTATIVE

Total quantity for CET 402.1 = 1,020

CET 406 — **EXCAVATION FOR UTILITY STRUCTURE** — **C.Y.**

At the following locations:

S/S 54th Street, E/O Railroad Tracks

Total quantity for CET 406 = 12

CET 450.3 — **CONSTRUCTION FIELD SUPPORT REQUIRING AVERAGE MEDIUM SIZE CREW CAPABLE OF PERFORMING VARIOUS TASKS (TYPE .3)** — **CRHRS**

At the following locations:

S/S 54th Street, W/O Railroad Tracks
S/S 54th Street, E/O Railroad Tracks

Total quantity for CET 450.3 = 16

CET 501 — **REMOVAL OF ABANDONED MASONRY FOR ELEC. AND TEL. FACILITIES** — **C.Y.**

At the following locations:

S/S 54th Street, W/O Railroad Tracks
AS ENCOUNTERED AND DIRECTED BY A CON EDISON REPRESENTATIVE

Total quantity for CET 501 = 1

CET 603E.1	INSTALL UTILITY CONDUITS PLACED IN FINAL POSITION WITHOUT CONCRETE ENCASEMENT *At the following locations:* S/S 54th Street, W/O Railroad Tracks AS ENCOUNTERED AND DIRECTED BY A CON EDISON REPRESENTATIVE **Total quantity for CET 603E.1 = 6**	L.F.
CET 638N	INSTALLATION OF FIELD CONSTRUCTED UTILITY STRUCTURE *At the following locations:* S/S 54th Street, E/O Railroad Tracks **Total quantity for CET 638N = 12**	C.Y.
CET 638R	BREAK OUT AND REMOVE UTILITY STRUCTURE *At the following locations:* S/S 54th Street, E/O Railroad Tracks AS ENCOUNTERED AND DIRECTED BY A CON EDISON REPRESENTATIVE **Total quantity for CET 638R = 13**	C.Y.

FOR INFORMATION ONLY
ENGINEER'S ESTIMATE OF QUANTITIES AND TYPES OF INTERFERENCE
TIME WARNER CABLE OF NEW YORK CITY
QED1008
Trunk Water Main in 54th Street
Borough of Queens

CET ITEM	DESCRIPTION	UNITS	ESTIMATED QUANTITY
350	OVERHEAD ACCOMMODATION, PROTECTION OF OVERHEAD FACILITIES, POLES & APPURTENANCES	LS	1

TIME WARNER CABLE
SUPPORT & PROTECTION
QED1008
Trunk Water Main in 54th Street
Borough of Queens

CET 350	OVERHEAD ACCOMMODATION, PROTECTION OF OVERHEAD FACILITIES, POLES & APPURTENANCES		LS
	At the following locations:		
	AS ENCOUNTERED		
			1
		Total quantity for CET 350	1

SCHEDULE U-2

FOR INFORMATION ONLY

ENGINEER'S ESTIMATE OF QUANTITY AND TYPES of INTERFERENCE

FOR VERIZON

QED 1008

CONSTRUCTION of TRUNK MAIN in 54th STREET, Queens, N.Y.

CET ITEM NUMBER	DESCRIPTION	UNITS	ESTIMATED QUANTITY
330T	SUPPORT & PROTECTION OF COMMUNICATION UTILITY FACILITIES DURING EXCAVATION OF CITY TRENCH WHEN FACILITIES LIE IN OR CLOSE PROXIMITY TO TRENCH	LF	50
350	OVERHEAD ACCOMMODATION - PROTECTION OF OH FACILITIES, POLES & APPURTENANCES	LS	1
351	INSTALL AND REMOVE "A" FRAMES ON UTILITY POLES	EA.	2
400	TEST PITS FOR UTILITY FACILITIES	CY	7

VERIZON
Support and Protection
QED 1008
Construction of Trunk Water Main in 54th Street
Borough of Queens

CET 330T SUPPORT & PROTECTION OF COMMUNICATION UTILITY FACILITIES DURING EXCAVATION OF CITY TRENCH WHEN FACILITIES LIE IN OR CLOSE PROXIMITY TO TRENCH **50 LF**

At the following locations:

On 54th Street, south side at Jacking and Receiving Pits 50 LF

CET 350 OVERHEAD ACCOMMODATION, PROTECTION of OVERHEAD FACILITITIES & APPURTENANCES 1 LS

At the following locations:

On 54th Street, south side from Flushing to Grand Ave. 1 LS

CET 351 OVERHEAD ACCOMMODATION – PROTECTION of OVERHEAD FACILITIES, POLES AND APPURTENANCES 2 EA

At the following locations:

On 54th Street, south side at Jacking and Receiving Pits 2 EA

CET 400 TEST PITS for UTILITY FACILITIES **7 CY**

At the following locations:

On 54th Street, south side at Jacking and Receiving Pits **7** CY

SECTION U-3

(NO TEXT IN THIS SECTION)

END OF ADDENDUM No.4

This Addendum consists of Twenty Four (24) Pages
And Two (2) Pages of Contract Drawings

ATTACH TO CONTRACT DOCUMENTS

THE CITY OF NEW YORK
DEPARTMENT OF DESIGN AND CONSTRUCTION
INFRASTRUCTURE DIVISION
BUREAU OF DESIGN

PROJECT ID: QED1008

FOR THE INSTALLATION OF 60-INCH AND 12-INCH WATER MAINS IN: 54TH STREET BETWEEN FLUSHING AVENUE AND GRAND AVENUE

Together With All Work Incidental Thereto

BOROUGH OF QUEENS

ADDENDUM NO. 5

DATED: April 30, 2013

This Addendum is issued for the purpose of amending the requirements of the contract documents and is hereby made part of said contract documents to the same extent as if it was originally included therein.

(1) **Refer** to **Section 5.04B - Water Mains In Jacked Steel Sleeves**, Page V-29:
Delete Section 5.04B in its entirety:
Substitute the following new **Section 5.04B**:

SECTION 5.04B
WATER MAINS IN JACKED STEEL SLEEVES

5.04B.1 INTENT

This section describes construction of ductile iron water main carrier pipe or steel water main carrier pipe in jacked steel sleeves.

5.04B.2 DESCRIPTION

The sleeve and carrier pipe shall be constructed to the sizes, kinds, classes and wall thicknesses of pipe specified and in accordance with the details shown on the contract drawings. The construction of the water mains herein shall be by means of the jacking of a steel sleeve with the use of microtunneling/pipe jacking techniques and the insertion of a carrier pipe.

Microtunneling shall be defined as the trenchless installation of the pipe by jacking the pipe behind a remotely controlled tunnel-boring machine. The microtunnel machine shall be capable of adequately and safely counter-balancing prevailing hydrostatic conditions and shall be a slurry shield or an earth pressure-balanced shield or an approved equal. The microtunnel-boring machine shall be equipped with a rock cutter head capable of tunneling both rock and boulders of all sizes.

The Contractor shall replace any equipment deemed necessary in order to complete the microtunneling operation. This includes the rock cutter head and any other required equipment. No additional or separate payment will be made for any equipment replacement that is required to complete the microtunneling operation.

5.04B.3 SUBMITTALS

(1) Before commencing any operations associated with the construction of water mains in jacked steel sleeves the Contractor shall submit a detailed description of the proposed method of installation including locations and dimensions of jacking/receiving pits, insertion procedures and all shop drawings required for review and approval by the Engineer. These submittals shall include procedural details to allow the Engineer to evaluate the procedure to be used. All pertinent dimensions, material properties, and design calculations must be shown.

(2) Shop drawings shall be submitted in accordance with all applicable provisions of **Subsection 4.05.5 - Shop Drawings**, as required. Design criteria shall be submitted in accordance with all applicable requirements of **Subsection 4.05.6 - Design Criteria**, as required.

(3) The Contractor shall allow a minimum of four (4) weeks for review.

(4) No work associated with the construction of water mains in jacked steel sleeves shall commence until the Contractor receives all required approved shop drawing from the Department of Design and Construction, Division of Infrastructure.

5.04B.4 MATERIALS

(A) Steel carrier pipe shall comply with the requirements of **Division 2 - Specification For Furnishing, Delivering And Laying Steel Pipe And Appurtenances (dated March 1999)** which is made part of the Specifications For Trunk Main Work (dated February 2010). Steel fittings shall comply with the requirements of **Division 2 - Specification For Furnishing, Delivering And Laying Steel Pipe And Appurtenances (dated March 1999)** which is made part of the Specifications For Trunk Main Work (dated February 2010).

(B) Ductile iron carrier pipe shall comply with the requirements of **Section 2.01 - Specifications For Ductile Iron Pipe And Accessories**. Ductile iron fittings shall comply with the requirements of **Section 2.02 - Specifications For Ductile Iron Fittings And Accessories**.

(C) Joints shall be restrained joint, and shall be TR-FLEX, as manufactured by U.S. Pipe Company, Birmingham, Alabama; or approved equal. The joints shall be pressure rated for 150-psi.

(D) Steel Sleeves shall have an outer diameter (O.D.) as shown or specified and shall have a minimum sleeve thickness as specified in table below. The steel shall conform to ASTM A134 (plates: ASTM A283, Grade C) API std. 5L, Grade B. The jacked sleeve shall be designed to withstand jacking thrust as well as external loads. A factor of safety of 2.5 shall be used for jacking thrusts. Hydrostatic tests will not be required for steel sleeves.

Minimum Sleeve O.D.	Minimum Sleeve Thickness
30"	0.532"
36"	0.563"
42"	0.625"
48"	0.688"
54"	0.781"
60"	0.844"
66"	0.938"
72"	1.000"

(E) Grout utilized to fill the voids between the steel sleeve and the water main carrier pipe shall be Low Weight Cement Grout - Mearlcrete Cellular Concrete manufactured by the Mearl Corporation or approved equal.

Low Weight Cement Grout:

(a) Grout shall consist of neat Portland cement, water, Mearlcrete Foam Liquid concentrate and other materials as recommended by the Mearl Corporation or approved equal.

(b) Portland cement shall comply with the requirements of **General Specification 11 - Concrete, as modified in Section 2.15**, and shall be Type II.
(c) Mixing water shall be a maximum of six (6) gallons per bag of cement (water/cement ratio is 0.53), and be potable, free from deleterious amounts of acid, alkali, salts, oils and organic materials.
(d) Wet Density shall be 95-lb/ft³ maximum.
Dry Density shall be 90-lb/ft³ maximum.
Compressive Strength shall be 1,000-psi minimum.

(F) Grout utilized to fill the voids between the outside of the jacked sleeve and the soil shall be Pressure Grout.

Pressure Grout:

(a) Pressure grout shall consist of neat Portland cement or it shall be mixed in a proportion by volume of one (1) part Portland cement and one (1) part sand or it shall be mixed by volume of one (1) part Portland cement to one and one-half (1-1/2) parts lime flour and one-fiftieth (1/50) part Interplast IV.
(b) All parts shall be mixed with clean fresh water to the desired consistency. In no case shall more than eight (8) gallons of water be mixed per bag of cement.

5.04B.5 METHODS

(A) GENERAL

The Contractor shall install jacking and receiving pits properly braced to withstand both external loads (soil, water, etc.), and internal jacking loads. The Contractor shall furnish, install and remove to the extent required; thrust blocks or whatever provisions may be required in driving the sleeve forward. A jacking frame with integrated pipe guides or steel rails or beams embedded in concrete shall be used in the pit for placement and alignment of each piece of sleeve during installation procedures.

The steel sleeve shall be jacked into position by the use of jacks of sufficient capacity to push the pipe and microtunneling machine through the existing soil. Upon completion of each jacked section (jacking pit to receiving pit) the Contractor shall immediately pressure grout from the interior of the steel sleeve in conformance with **Subsection 5.04B.10**.

The Contractor shall follow the recommendations of the pipe manufacturer regarding the installation of the water main carrier pipe. The recommended installation method used by the Contractor shall be such that no damage will occur to the carrier pipe when it is inserted.

The Contractor shall install the water main carrier pipe approximately in the center of the steel sleeve. Water main carrier pipe shall be properly braced and supported with spacers that are electrically insulated from the steel sleeve. The braces/supports/spacers shall be installed and positioned in accordance with the manufacturer's recommendations and shall not inhibit the flow of grout. The Contractor shall submit design and method of bracing prior to installation of carrier pipe for approval by the Engineer. Proper precautions shall be taken by the Contractor to prevent floatation or motion of the carrier pipe during the grouting operation.

The excavated pits shall be dewatered wherever required due to groundwater conditions. The Contractor shall lower and maintain the groundwater level below the invert of the steel sleeve at all times during construction by dewatering means to prevent inflow of water or water and soil into the pit.

(B) CONTROL OF LINE AND GRADE

(1) Lines and grades shall conform to the requirements of **Subsection 1.06.8** and as amended herein. The Contractor shall establish the baselines and benchmarks in accordance with this contract.

(2) The Contractor shall submit to the Engineer copies of field notes used to establish all lines and grades. However, the Contractor remains fully responsible for the accuracy of the Contractor's work.

(3) If there is any movement during construction, it shall be the Contractor's responsibility to detect and correct it as required.

(4) The microtunnel excavation and run of jacked pipe shall be controlled in such a manner that the deviation from grade is not more than one (1) inch nor from line more than three (3) inches. The Contractor shall make note of all possible encumbrances and structures in the line of work, which may restrict clearances.

(C) EQUIPMENT

(1) The microtunnel boring machine shall be capable of controlling the volume of excavated material removed from the excavation face at all times.

(2) The microtunnel-boring machine shall be fully steerable both horizontally and vertically.

(3) Guidance of the microtunnel-boring machine shall be through a remote console, in or adjacent to the jacking pit or shaft. At a minimum, the thrust force, rate of advance, distance along heading, deviation from line and deviation from grade shall be monitored and displayed on the remote console.

(D) SAFETY

The Contractor shall carry out the Contractor's operations in strict accordance with OSHA and the Manufacturer's safety requirements.

(E) CLEANLINESS

The inside of the carrier pipe shall be thoroughly cleaned before installation and kept clean during installation. Pipe ends shall be capped or plugged as necessary to maintain cleanliness throughout installation.

(F) INSTALLATION OF CASING PIPE FOR INSERTION OF GROUT

After the steel sleeve has been installed the Contractor shall drill 4-inch casing pipes from the ground surface down to the top centerline of the steel sleeve. The number of casing pipes placed shall be at a minimum, one at each end of the steel sleeve. The Engineer may order the drilling of additional casing pipes for grouting along the length of the steel sleeve. Payment for all work required for the drilling of additional casing pipe together with fittings, excavation requirements, removal of casing pipe, etc. ordered by the Engineer, shall be made under **Articles 25 and 26** of the Contract.

The Contactor shall wash out the material inside the 4-inch casing pipes, then drill holes in the top of the steel sleeve and install fittings to the ends of the casing pipe that will produce a sealed connection to both the casing pipe and the steel sleeve. These fittings shall provide a sealed connection so that the insertion of grout between the steel sleeve and the carrier pipe can proceed with no leakage of grout to the outside soil area of the steel sleeve.

The Contactor shall remove any debris due to the installation of the casing pipe from the inside of the steel sleeve to the satisfaction of the Engineer.

5.04B.6 QUALIFICATIONS

The microtunneling/pipe jacking Contractor or subcontractor performing the work required under this contract must be experienced in work of this nature and must have successfully completed a minimum of two (2) tunneling projects in the last five (5) years using pressurized face microtunneling/pipe jacking equipment with a closed face tunnel shield and positive controlled face pressure. The Contractor shall submit a description of such projects, which shall include at a minimum, a listing of the locations, dates of projects, owners, pipe types and sizes, type of equipment utilized, maximum line and grade deviations and other information relevant to the issue of the successful completion of such projects.

The microtunneling/pipe jacking machine operator(s) shall have adequate experience in using the same type of equipment required for this project, namely, pressurized face microtunneling/pipe jacking equipment with a closed face tunnel shield and positive, controllable tunnel face pressure.

Prior to the start of work the Contractor will be required to submit the name and resume of the pipe-jacking subcontractor for approval.

5.04B.7 SPECIFIC REQUIREMENTS FOR JACKING

All connections between successive steel sleeve pipe lengths shall be continuously butt-welded. Welds shall be made in conformance with AWS D1.1. Upon completion of a bore (jacking pit to receiving pit) the Contractor shall pressure grout all voids between the outside of the jacked sleeve and the soil and shall install the carrier pipe and completely fill all voids between the inside of the sleeve and the outside of the carrier pipe with low weight cement grout.

5.04B.8 INSPECTION AND TESTING

The entire installation procedure shall be rigorously inspected as herein specified, but inspection shall not relieve the Contractor of responsibility to furnish material and perform work in accordance with the specifications. If at any time it is found that the pipe insertion procedure is not in accordance with these specifications, the pipe so installed will be subject to rejection.

The Contractor shall furnish the Engineer reasonable assistance, without charge, for inspection and for obtaining such information, as the Engineer desires in respect to the progress and manner of the work performed.

After the water main carrier pipe has been inserted into the sleeve it shall be given a combined pressure and leakage test in accordance with the requirements of these specifications.

If a section fails to pass the pressure and leakage test, the Contractor shall do everything necessary to locate, uncover and repair or replace the defective pipe, pipe fitting, or joint, all at the Contractor's own expense.

5.04B.9 CLEANING

Prior to the insertion of the carrier pipe the Contractor will be required to remove and properly dispose of all sediments and deposits from within the steel sleeve.

The Contractor shall furnish all water and pumping equipment necessary for the cleaning operation. After cleaning, the sleeve shall be clean and entirely free from projections that might interfere with the insertion of the carrier pipe through it.

As soon as possible after the completion of the cleaning operation, the Engineer will conduct a visual inspection of the pipe for any defect or leakage so those repairs, if necessary, can be made. No carrier pipe shall be installed until authorized by the Engineer.

5.04B.10 GROUTING

(A) GROUT FILL OUTSIDE JACKED SLEEVE

Upon completion of a jacked section (jacking pit to receiving pit) the Contractor shall immediately pressure grout from the interior of the steel sleeve. Pressure grout shall be placed under pressure to fill all annular voids between the outside of the jacked sleeve and the soil.

Systems of standard pipe, fittings, hose and special grouting outlets embedded in the sleeve shall be provided by the Contractor. Care shall be taken to insure that parts of the system are maintained free from dirt. Cement grout shall be forced under pressure into the grouting connections. Grouting shall start at the lowest connections and shall proceed until grout begins to flow from upper connections. Connections shall then be made to those holes and the operation continued to completion. During the grouting process, each grout plug shall be removed and the grout-mixing machine shall be connected to the hole by means of a hose and nipple cut to the same thread as the screw plug.

The sleeve shall have grout holes equipped with pipe half couplings. Three (3) grout holes spaced one hundred twenty (120) degrees on center shall be installed on each section of pipe. The two (2) inch standard pipe half couplings welded into the holes in the sleeve shall be provided with threaded cast iron plugs. Plugs shall be no less than five-eighths (5/8) inch in diameter.

Apparatus for mixing and placing grout shall be capable of mixing effectively and stirring the grout and then forcing it into the grout connections in a continuous uninterrupted flow. When grouting is completed the grout plugs in each section shall be screwed into the grout holes for their full length and tightened to provide a watertight seal.

The Contractor shall take all necessary precautions to prevent grout from escaping and setting on inner surface of steel sleeve. The Contractor shall remove such grout and restore the surface to its original condition.

The Contractor shall provide the Engineer all facilities necessary for the inspection of pressure grouting operation to ensure complete filling of the annular void. These facilities shall include removing of grout plugs as required for inspection behind the steel sleeve. Any voids found shall be grouted at once as directed by the Engineer.

The Contractor shall keep and furnish to the Engineer an accurate log of grouting operations, pressures, rates of pumping, amount of cement for each change in water/cement ratio and such other data as are required by the Engineer. The log shall be supplied by the Contractor to the Engineer or the Engineer's representative after each shift.

After completion of pressure grouting the water main carrier pipe shall be installed in the center of the steel sleeve.

(B) GROUT FILL AROUND CARRIER PIPE

After the carrier pipe is satisfactorily installed and passes inspection and testing, the carrier pipe shall be secured to the steel sleeve at each end with a 12-inch long concrete plug. Unless otherwise shown on the contract drawings, the Contractor shall submit along with the required submittal in **Subsection 5.04B.3** the design of these concrete plugs. The design of these concrete plugs shall incorporate a method for securing the concrete plugs to the ends of the steel sleeve and carrier pipe so as to be capable of withstanding the grouting pressures without slippage or blow-out at the ends.

After approval by the Engineer the entire annular space between the inside of the steel sleeve and the outside of the water main carrier pipe shall be filled with Low Weight Cement Grout in one continuous uninterrupted operation in a manner to prevent occurrence of any voids between the steel sleeve and the carrier pipe.

The grout fill shall be placed by pneumatic or pumping equipment under a pressure between 10 and 15-psi to ensure that the entire void space has been evenly and completely filled. The pressure must

be continuously monitored and care must be taken to avoid pressures above 15-psi. Equipment and methods of placement of the grout fill will be subject to review by the Engineer.

The volume of the grout being placed shall be monitored and recorded. A comparison between the theoretical volume and the actual volume of grout placed shall be done and any discrepancies shall be brought to the attention of the Engineer.

The Contractor shall also fill the holes used to place the grout.

5.04B.11 MEASUREMENT

The quantity of water main in jacked steel sleeve to be measured for payment shall be the number of linear feet of each size, kind, class and wall thickness of water main carrier pipe together with jacked steel sleeve incorporated in the work, complete, as shown, specified or required, measured horizontally along the center line of water main.

5.04B.12 PRICE TO COVER

The contract price for "WATER MAINS IN JACKED STEEL SLEEVES" shall be the unit price bid per linear foot for each size, kind, class and wall thickness of water main carrier pipe together with jacked steel sleeve and shall cover the cost of all labor, materials, plant, equipment, samples, tests and insurance required and necessary to construct the water main in jacked steel sleeve to the sizes and to the lines and grades shown, including the earth excavation of all materials of whatever nature encountered (See **Section 4.03 - Earth Excavation**); all sheeting and bracing; pumping; bridging; connections; backfilling; jacking and receiving pits; installation of steel sleeve; grouting for soil stabilization; cleaning of carrier pipe and steel sleeve; installation of water main carrier pipe; inspection and testing; grouting required to fill the voids between the inside of steel sleeve and the outside of water main carrier pipe; preparation, submittal and approval of all required shop drawings and designs; obtaining of all necessary permits and furnishing and installing all other items necessary to complete this work and do all work incidental thereto, all in accordance with the contract drawings, specifications and standards and as directed by the Engineer.

In addition, included in the price hereunder shall be the cost of all labor and materials necessary to remove all specified and ordered structures and appurtenances that may be in the jacking and receiving pits and in the line of the work and to do all the work incidental thereto, all in accordance with **Subsections 1.06.12 and 1.06.27** of the specifications and as directed by the Engineer.

Included in the price hereunder shall be the cost of all labor, materials and equipment required to install concrete plugs and for installing and removing 4-inch grouting casing pipes.

Payment for Water Mains In Jacked Steel Sleeves will be made under the Item Number as calculated below:

The Item Numbers for Water Mains In Jacked Steel Sleeves have eleven characters. (The decimal point is considered a character, the third character.)

(1) The first five characters shall define Water Mains In Jacked Steel Sleeves:
60.31

(2) The sixth character shall define the Kind of Water Main Carrier Pipe:
D - Ductile Iron Restrained Joint Pipe
S - Steel Pipe (Double Lap Fillet Welded)

(3) The seventh and eighth characters shall define the Diameter of Water Main Carrier Pipe. (The seventh and eighth characters representing the unit of inches for the Diameter of the Water Main Carrier Pipe.) See examples below:
08 - 8-Inch

20 - 20-Inch
48 - 48-Inch

(4) The ninth character shall define the Class of Ductile Iron Water Main Carrier Pipe or the Wall Thickness of Steel Water Main Carrier Pipe (Wall thickness in 1/8-inch increments):

3 - 3/8-Inch Wall Thickness
4 - 4/8-Inch or 1/2-Inch Wall Thickness
5 - Class 55 or 5/8-Inch Wall Thickness
6 - Class 56 or 6/8-Inch or 3/4-Inch Wall Thickness

(5) The tenth and eleventh characters shall define the Diameter of the Jacked Steel Sleeve Pipe. (The tenth and eleventh characters representing the unit of inches for the Diameter of the Jacked Steel Sleeve Pipe.) See examples below:

30 - 30-Inch
66 - 66-Inch

(6) Examples of Item Numbers together with Description and Pay Unit as provided in the Bid Schedule are provided below:

Item No.	Description	Pay Unit
60.31D48572	48-INCH DUCTILE IRON PIPE CLASS 55 WATER MAIN IN JACKED 72-INCH STEEL SLEEVE	L.F.
60.31D20536	20-INCH DUCTILE IRON PIPE CLASS 55 WATER MAIN IN JACKED 36-INCH STEEL SLEEVE	L.F.
60.31D12630	12-INCH DUCTILE IRON PIPE CLASS 56 WATER MAIN IN JACKED 30-INCH STEEL SLEEVE	L.F.
60.31S48472	48-INCH STEEL PIPE (1/2-INCH WALL THICKNESS) WATER MAIN IN JACKED 72-INCH STEEL SLEEVE	L.F.

By signing in the space provided below, the bidder acknowledges receipt of the eight (8) pages of this Addendum.

THIS ADDENDUM MUST BE SIGNED BY ALL BIDDERS AND ATTACHED TO THEIR BIDS.

G. Saini

GURDIP SAINI, P.E.
Assistant Commissioner/Design

_____
Name of Bidder

By:_____

ATTACH TO CONTRACT DOCUMENTS

THE CITY OF NEW YORK
DEPARTMENT OF DESIGN AND CONSTRUCTION
INFRASTRUCTURE DIVISION
BUREAU OF DESIGN

PROJECT ID: QED1008

FOR THE INSTALLATION OF 60-INCH AND 12-INCH WATER MAINS IN: 54TH STREET BETWEEN FLUSHING AVENUE AND GRAND AVENUE

Together With All Work Incidental Thereto

BOROUGH OF QUEENS

ADDENDUM NO. 5

DATED: April 30, 2013

This Addendum is issued for the purpose of amending the requirements of the contract documents and is hereby made part of said contract documents to the same extent as if it was originally included therein.

(1) **Refer** to **Section 5.04B - Water Mains In Jacked Steel Sleeves**, Page V-29:
Delete Section 5.04B in its entirety:
Substitute the following new **Section 5.04B**:

SECTION 5.04B
WATER MAINS IN JACKED STEEL SLEEVES

5.04B.1 INTENT

This section describes construction of ductile iron water main carrier pipe or steel water main carrier pipe in jacked steel sleeves.

5.04B.2 DESCRIPTION

The sleeve and carrier pipe shall be constructed to the sizes, kinds, classes and wall thicknesses of pipe specified and in accordance with the details shown on the contract drawings. The construction of the water mains herein shall be by means of the jacking of a steel sleeve with the use of microtunneling/pipe jacking techniques and the insertion of a carrier pipe.

Microtunneling shall be defined as the trenchless installation of the pipe by jacking the pipe behind a remotely controlled tunnel-boring machine. The microtunnel machine shall be capable of adequately and safely counter-balancing prevailing hydrostatic conditions and shall be a slurry shield or an earth pressure-balanced shield or an approved equal. The microtunnel-boring machine shall be equipped with a rock cutter head capable of tunneling both rock and boulders of all sizes.

The Contractor shall replace any equipment deemed necessary in order to complete the microtunneling operation. This includes the rock cutter head and any other required equipment. No additional or separate payment will be made for any equipment replacement that is required to complete the microtunneling operation.

5.04B.3 SUBMITTALS

(1) Before commencing any operations associated with the construction of water mains in jacked steel sleeves the Contractor shall submit a detailed description of the proposed method of installation including locations and dimensions of jacking/receiving pits, insertion procedures and all shop drawings required for review and approval by the Engineer. These submittals shall include procedural details to allow the Engineer to evaluate the procedure to be used. All pertinent dimensions, material properties, and design calculations must be shown.

(2) Shop drawings shall be submitted in accordance with all applicable provisions of **Subsection 4.05.5 - Shop Drawings**, as required. Design criteria shall be submitted in accordance with all applicable requirements of **Subsection 4.05.6 - Design Criteria**, as required.

(3) The Contractor shall allow a minimum of four (4) weeks for review.

(4) No work associated with the construction of water mains in jacked steel sleeves shall commence until the Contractor receives all required approved shop drawing from the Department of Design and Construction, Division of Infrastructure.

5.04B.4 MATERIALS

(A) Steel carrier pipe shall comply with the requirements of **Division 2 - Specification For Furnishing, Delivering And Laying Steel Pipe And Appurtenances (dated March 1999)** which is made part of the Specifications For Trunk Main Work (dated February 2010). Steel fittings shall comply with the requirements of **Division 2 - Specification For Furnishing, Delivering And Laying Steel Pipe And Appurtenances (dated March 1999)** which is made part of the Specifications For Trunk Main Work (dated February 2010).

(B) Ductile iron carrier pipe shall comply with the requirements of **Section 2.01 - Specifications For Ductile Iron Pipe And Accessories**. Ductile iron fittings shall comply with the requirements of **Section 2.02 - Specifications For Ductile Iron Fittings And Accessories**.

(C) Joints shall be restrained joint, and shall be TR-FLEX, as manufactured by U.S. Pipe Company, Birmingham, Alabama; or approved equal. The joints shall be pressure rated for 150-psi.

(D) Steel Sleeves shall have an outer diameter (O.D.) as shown or specified and shall have a minimum sleeve thickness as specified in table below. The steel shall conform to ASTM A134 (plates: ASTM A283, Grade C) API std. 5L, Grade B. The jacked sleeve shall be designed to withstand jacking thrust as well as external loads. A factor of safety of 2.5 shall be used for jacking thrusts. Hydrostatic tests will not be required for steel sleeves.

Minimum Sleeve O.D.	Minimum Sleeve Thickness
30"	0.532"
36"	0.563"
42"	0.625"
48"	0.688"
54"	0.781"
60"	0.844"
66"	0.938"
72"	1.000"

(E) Grout utilized to fill the voids between the steel sleeve and the water main carrier pipe shall be Low Weight Cement Grout - Mearlcrete Cellular Concrete manufactured by the Mearl Corporation or approved equal.

Low Weight Cement Grout:

(a) Grout shall consist of neat Portland cement, water, Mearlcrete Foam Liquid concentrate and other materials as recommended by the Mearl Corporation or approved equal.

(b) Portland cement shall comply with the requirements of **General Specification 11 - Concrete, as modified in Section 2.15**, and shall be Type II.
(c) Mixing water shall be a maximum of six (6) gallons per bag of cement (water/cement ratio is 0.53), and be potable, free from deleterious amounts of acid, alkali, salts, oils and organic materials.
(d) Wet Density shall be 95-lb/ft³ maximum.
Dry Density shall be 90-lb/ft³ maximum.
Compressive Strength shall be 1,000-psi minimum.

(F) Grout utilized to fill the voids between the outside of the jacked sleeve and the soil shall be Pressure Grout.

Pressure Grout:

(a) Pressure grout shall consist of neat Portland cement or it shall be mixed in a proportion by volume of one (1) part Portland cement and one (1) part sand or it shall be mixed by volume of one (1) part Portland cement to one and one-half (1-1/2) parts lime flour and one-fiftieth (1/50) part Interplast IV.
(b) All parts shall be mixed with clean fresh water to the desired consistency. In no case shall more than eight (8) gallons of water be mixed per bag of cement.

5.04B.5 METHODS

(A) GENERAL

The Contractor shall install jacking and receiving pits properly braced to withstand both external loads (soil, water, etc.), and internal jacking loads. The Contractor shall furnish, install and remove to the extent required; thrust blocks or whatever provisions may be required in driving the sleeve forward. A jacking frame with integrated pipe guides or steel rails or beams embedded in concrete shall be used in the pit for placement and alignment of each piece of sleeve during installation procedures.

The steel sleeve shall be jacked into position by the use of jacks of sufficient capacity to push the pipe and microtunneling machine through the existing soil. Upon completion of each jacked section (jacking pit to receiving pit) the Contractor shall immediately pressure grout from the interior of the steel sleeve in conformance with **Subsection 5.04B.10**.

The Contractor shall follow the recommendations of the pipe manufacturer regarding the installation of the water main carrier pipe. The recommended installation method used by the Contractor shall be such that no damage will occur to the carrier pipe when it is inserted.

The Contractor shall install the water main carrier pipe approximately in the center of the steel sleeve. Water main carrier pipe shall be properly braced and supported with spacers that are electrically insulated from the steel sleeve. The braces/supports/spacers shall be installed and positioned in accordance with the manufacturer's recommendations and shall not inhibit the flow of grout. The Contractor shall submit design and method of bracing prior to installation of carrier pipe for approval by the Engineer. Proper precautions shall be taken by the Contractor to prevent floatation or motion of the carrier pipe during the grouting operation.

The excavated pits shall be dewatered wherever required due to groundwater conditions. The Contractor shall lower and maintain the groundwater level below the invert of the steel sleeve at all times during construction by dewatering means to prevent inflow of water or water and soil into the pit.

(B) CONTROL OF LINE AND GRADE

(1) Lines and grades shall conform to the requirements of **Subsection 1.06.8** and as amended herein. The Contractor shall establish the baselines and benchmarks in accordance with this contract.

(2) The Contractor shall submit to the Engineer copies of field notes used to establish all lines and grades. However, the Contractor remains fully responsible for the accuracy of the Contractor's work.

(3) If there is any movement during construction, it shall be the Contractor's responsibility to detect and correct it as required.

(4) The microtunnel excavation and run of jacked pipe shall be controlled in such a manner that the deviation from grade is not more than one (1) inch nor from line more than three (3) inches. The Contractor shall make note of all possible encumbrances and structures in the line of work, which may restrict clearances.

(C) EQUIPMENT

(1) The microtunnel boring machine shall be capable of controlling the volume of excavated material removed from the excavation face at all times.

(2) The microtunnel-boring machine shall be fully steerable both horizontally and vertically.

(3) Guidance of the microtunnel-boring machine shall be through a remote console, in or adjacent to the jacking pit or shaft. At a minimum, the thrust force, rate of advance, distance along heading, deviation from line and deviation from grade shall be monitored and displayed on the remote console.

(D) SAFETY

The Contractor shall carry out the Contractor's operations in strict accordance with OSHA and the Manufacturer's safety requirements.

(E) CLEANLINESS

The inside of the carrier pipe shall be thoroughly cleaned before installation and kept clean during installation. Pipe ends shall be capped or plugged as necessary to maintain cleanliness throughout installation.

(F) INSTALLATION OF CASING PIPE FOR INSERTION OF GROUT

After the steel sleeve has been installed the Contractor shall drill 4-inch casing pipes from the ground surface down to the top centerline of the steel sleeve. The number of casing pipes placed shall be at a minimum, one at each end of the steel sleeve. The Engineer may order the drilling of additional casing pipes for grouting along the length of the steel sleeve. Payment for all work required for the drilling of additional casing pipe together with fittings, excavation requirements, removal of casing pipe, etc. ordered by the Engineer, shall be made under **Articles 25 and 26** of the Contract.

The Contactor shall wash out the material inside the 4-inch casing pipes, then drill holes in the top of the steel sleeve and install fittings to the ends of the casing pipe that will produce a sealed connection to both the casing pipe and the steel sleeve. These fittings shall provide a sealed connection so that the insertion of grout between the steel sleeve and the carrier pipe can proceed with no leakage of grout to the outside soil area of the steel sleeve.

The Contactor shall remove any debris due to the installation of the casing pipe from the inside of the steel sleeve to the satisfaction of the Engineer.

5.04B.6 QUALIFICATIONS

The microtunneling/pipe jacking Contractor or subcontractor performing the work required under this contract must be experienced in work of this nature and must have successfully completed a minimum of two (2) tunneling projects in the last five (5) years using pressurized face microtunneling/pipe jacking equipment with a closed face tunnel shield and positive controlled face pressure. The Contractor shall submit a description of such projects, which shall include at a minimum, a listing of the locations, dates of projects, owners, pipe types and sizes, type of equipment utilized, maximum line and grade deviations and other information relevant to the issue of the successful completion of such projects.

The microtunneling/pipe jacking machine operator(s) shall have adequate experience in using the same type of equipment required for this project, namely, pressurized face microtunneling/pipe jacking equipment with a closed face tunnel shield and positive, controllable tunnel face pressure.

Prior to the start of work the Contractor will be required to submit the name and resume of the pipe-jacking subcontractor for approval.

5.04B.7 SPECIFIC REQUIREMENTS FOR JACKING

All connections between successive steel sleeve pipe lengths shall be continuously butt-welded. Welds shall be made in conformance with AWS D1.1. Upon completion of a bore (jacking pit to receiving pit) the Contractor shall pressure grout all voids between the outside of the jacked sleeve and the soil and shall install the carrier pipe and completely fill all voids between the inside of the sleeve and the outside of the carrier pipe with low weight cement grout.

5.04B.8 INSPECTION AND TESTING

The entire installation procedure shall be rigorously inspected as herein specified, but inspection shall not relieve the Contractor of responsibility to furnish material and perform work in accordance with the specifications. If at any time it is found that the pipe insertion procedure is not in accordance with these specifications, the pipe so installed will be subject to rejection.

The Contractor shall furnish the Engineer reasonable assistance, without charge, for inspection and for obtaining such information, as the Engineer desires in respect to the progress and manner of the work performed.

After the water main carrier pipe has been inserted into the sleeve it shall be given a combined pressure and leakage test in accordance with the requirements of these specifications.

If a section fails to pass the pressure and leakage test, the Contractor shall do everything necessary to locate, uncover and repair or replace the defective pipe, pipe fitting, or joint, all at the Contractor's own expense.

5.04B.9 CLEANING

Prior to the insertion of the carrier pipe the Contractor will be required to remove and properly dispose of all sediments and deposits from within the steel sleeve.

The Contractor shall furnish all water and pumping equipment necessary for the cleaning operation. After cleaning, the sleeve shall be clean and entirely free from projections that might interfere with the insertion of the carrier pipe through it.

As soon as possible after the completion of the cleaning operation, the Engineer will conduct a visual inspection of the pipe for any defect or leakage so those repairs, if necessary, can be made. No carrier pipe shall be installed until authorized by the Engineer.

5.04B.10 GROUTING

(A) GROUT FILL OUTSIDE JACKED SLEEVE

Upon completion of a jacked section (jacking pit to receiving pit) the Contractor shall immediately pressure grout from the interior of the steel sleeve. Pressure grout shall be placed under pressure to fill all annular voids between the outside of the jacked sleeve and the soil.

Systems of standard pipe, fittings, hose and special grouting outlets embedded in the sleeve shall be provided by the Contractor. Care shall be taken to insure that parts of the system are maintained free from dirt. Cement grout shall be forced under pressure into the grouting connections. Grouting shall start at the lowest connections and shall proceed until grout begins to flow from upper connections. Connections shall then be made to those holes and the operation continued to completion. During the grouting process, each grout plug shall be removed and the grout-mixing machine shall be connected to the hole by means of a hose and nipple cut to the same thread as the screw plug.

The sleeve shall have grout holes equipped with pipe half couplings. Three (3) grout holes spaced one hundred twenty (120) degrees on center shall be installed on each section of pipe. The two (2) inch standard pipe half couplings welded into the holes in the sleeve shall be provided with threaded cast iron plugs. Plugs shall be no less than five-eighths (5/8) inch in diameter.

Apparatus for mixing and placing grout shall be capable of mixing effectively and stirring the grout and then forcing it into the grout connections in a continuous uninterrupted flow. When grouting is completed the grout plugs in each section shall be screwed into the grout holes for their full length and tightened to provide a watertight seal.

The Contractor shall take all necessary precautions to prevent grout from escaping and setting on inner surface of steel sleeve. The Contractor shall remove such grout and restore the surface to its original condition.

The Contractor shall provide the Engineer all facilities necessary for the inspection of pressure grouting operation to ensure complete filling of the annular void. These facilities shall include removing of grout plugs as required for inspection behind the steel sleeve. Any voids found shall be grouted at once as directed by the Engineer.

The Contractor shall keep and furnish to the Engineer an accurate log of grouting operations, pressures, rates of pumping, amount of cement for each change in water/cement ratio and such other data as are required by the Engineer. The log shall be supplied by the Contractor to the Engineer or the Engineer's representative after each shift.

After completion of pressure grouting the water main carrier pipe shall be installed in the center of the steel sleeve.

(B) GROUT FILL AROUND CARRIER PIPE

After the carrier pipe is satisfactorily installed and passes inspection and testing, the carrier pipe shall be secured to the steel sleeve at each end with a 12-inch long concrete plug. Unless otherwise shown on the contract drawings, the Contractor shall submit along with the required submittal in **Subsection 5.04B.3** the design of these concrete plugs. The design of these concrete plugs shall incorporate a method for securing the concrete plugs to the ends of the steel sleeve and carrier pipe so as to be capable of withstanding the grouting pressures without slippage or blow-out at the ends.

After approval by the Engineer the entire annular space between the inside of the steel sleeve and the outside of the water main carrier pipe shall be filled with Low Weight Cement Grout in one continuous uninterrupted operation in a manner to prevent occurrence of any voids between the steel sleeve and the carrier pipe.

The grout fill shall be placed by pneumatic or pumping equipment under a pressure between 10 and 15-psi to ensure that the entire void space has been evenly and completely filled. The pressure must

be continuously monitored and care must be taken to avoid pressures above 15-psi. Equipment and methods of placement of the grout fill will be subject to review by the Engineer.

The volume of the grout being placed shall be monitored and recorded. A comparison between the theoretical volume and the actual volume of grout placed shall be done and any discrepancies shall be brought to the attention of the Engineer.

The Contractor shall also fill the holes used to place the grout.

5.04B.11 MEASUREMENT

The quantity of water main in jacked steel sleeve to be measured for payment shall be the number of linear feet of each size, kind, class and wall thickness of water main carrier pipe together with jacked steel sleeve incorporated in the work, complete, as shown, specified or required, measured horizontally along the center line of water main.

5.04B.12 PRICE TO COVER

The contract price for "WATER MAINS IN JACKED STEEL SLEEVES" shall be the unit price bid per linear foot for each size, kind, class and wall thickness of water main carrier pipe together with jacked steel sleeve and shall cover the cost of all labor, materials, plant, equipment, samples, tests and insurance required and necessary to construct the water main in jacked steel sleeve to the sizes and to the lines and grades shown, including the earth excavation of all materials of whatever nature encountered (See **Section 4.03 - Earth Excavation**); all sheeting and bracing; pumping; bridging; connections; backfilling; jacking and receiving pits; installation of steel sleeve; grouting for soil stabilization; cleaning of carrier pipe and steel sleeve; installation of water main carrier pipe; inspection and testing; grouting required to fill the voids between the inside of steel sleeve and the outside of water main carrier pipe; preparation, submittal and approval of all required shop drawings and designs; obtaining of all necessary permits and furnishing and installing all other items necessary to complete this work and do all work incidental thereto, all in accordance with the contract drawings, specifications and standards and as directed by the Engineer.

In addition, included in the price hereunder shall be the cost of all labor and materials necessary to remove all specified and ordered structures and appurtenances that may be in the jacking and receiving pits and in the line of the work and to do all the work incidental thereto, all in accordance with **Subsections 1.06.12 and 1.06.27** of the specifications and as directed by the Engineer.

Included in the price hereunder shall be the cost of all labor, materials and equipment required to install concrete plugs and for installing and removing 4-inch grouting casing pipes.

Payment for Water Mains In Jacked Steel Sleeves will be made under the Item Number as calculated below:

The Item Numbers for Water Mains In Jacked Steel Sleeves have eleven characters. (The decimal point is considered a character, the third character.)

(1) The first five characters shall define Water Mains In Jacked Steel Sleeves:
60.31

(2) The sixth character shall define the Kind of Water Main Carrier Pipe:
D - Ductile Iron Restrained Joint Pipe
S - Steel Pipe (Double Lap Fillet Welded)

(3) The seventh and eighth characters shall define the Diameter of Water Main Carrier Pipe. (The seventh and eighth characters representing the unit of inches for the Diameter of the Water Main Carrier Pipe.) See examples below:
08 - 8-Inch

20 - 20-Inch
48 - 48-Inch

(4) The ninth character shall define the Class of Ductile Iron Water Main Carrier Pipe or the Wall Thickness of Steel Water Main Carrier Pipe (Wall thickness in 1/8-inch increments):

3 - 3/8-Inch Wall Thickness
4 - 4/8-Inch or 1/2-Inch Wall Thickness
5 - Class 55 or 5/8-Inch Wall Thickness
6 - Class 56 or 6/8-Inch or 3/4-Inch Wall Thickness

(5) The tenth and eleventh characters shall define the Diameter of the Jacked Steel Sleeve Pipe. (The tenth and eleventh characters representing the unit of inches for the Diameter of the Jacked Steel Sleeve Pipe.) See examples below:

30 - 30-Inch
66 - 66-Inch

(6) Examples of Item Numbers together with Description and Pay Unit as provided in the Bid Schedule are provided below:

Item No.	Description	Pay Unit
60.31D48572	48-INCH DUCTILE IRON PIPE CLASS 55 WATER MAIN IN JACKED 72-INCH STEEL SLEEVE	L.F.
60.31D20536	20-INCH DUCTILE IRON PIPE CLASS 55 WATER MAIN IN JACKED 36-INCH STEEL SLEEVE	L.F.
60.31D12630	12-INCH DUCTILE IRON PIPE CLASS 56 WATER MAIN IN JACKED 30-INCH STEEL SLEEVE	L.F.
60.31S48472	48-INCH STEEL PIPE (1/2-INCH WALL THICKNESS) WATER MAIN IN JACKED 72-INCH STEEL SLEEVE	L.F.

By signing in the space provided below, the bidder acknowledges receipt of the eight (8) pages of this Addendum.

THIS ADDENDUM MUST BE SIGNED BY ALL BIDDERS AND ATTACHED TO THEIR BIDS.

G. Saini

GURDIP SAINI, P.E.
Assistant Commissioner/Design

_____
Name of Bidder

By:_____

ATTACH TO CONTRACT DOCUMENTS

THE CITY OF NEW YORK
DEPARTMENT OF DESIGN AND CONSTRUCTION
INFRASTRUCTURE DIVISION
BUREAU OF DESIGN

PROJECT ID: QED1008

FOR THE INSTALLATION OF 60-INCH AND 12-INCH WATER MAINS IN: 54TH STREET BETWEEN FLUSHING AVENUE AND GRAND AVENUE

Together With All Work Incidental Thereto

BOROUGH OF QUEENS

ADDENDUM NO. 5

DATED: April 30, 2013

This Addendum is issued for the purpose of amending the requirements of the contract documents and is hereby made part of said contract documents to the same extent as if it was originally included therein.

(1) **Refer** to **Section 5.04B - Water Mains In Jacked Steel Sleeves**, Page V-29:
Delete Section 5.04B in its entirety:
Substitute the following new **Section 5.04B**:

SECTION 5.04B
WATER MAINS IN JACKED STEEL SLEEVES

5.04B.1 INTENT

This section describes construction of ductile iron water main carrier pipe or steel water main carrier pipe in jacked steel sleeves.

5.04B.2 DESCRIPTION

The sleeve and carrier pipe shall be constructed to the sizes, kinds, classes and wall thicknesses of pipe specified and in accordance with the details shown on the contract drawings. The construction of the water mains herein shall be by means of the jacking of a steel sleeve with the use of microtunneling/pipe jacking techniques and the insertion of a carrier pipe.

Microtunneling shall be defined as the trenchless installation of the pipe by jacking the pipe behind a remotely controlled tunnel-boring machine. The microtunnel machine shall be capable of adequately and safely counter-balancing prevailing hydrostatic conditions and shall be a slurry shield or an earth pressure-balanced shield or an approved equal. The microtunnel-boring machine shall be equipped with a rock cutter head capable of tunneling both rock and boulders of all sizes.

The Contractor shall replace any equipment deemed necessary in order to complete the microtunneling operation. This includes the rock cutter head and any other required equipment. No additional or separate payment will be made for any equipment replacement that is required to complete the microtunneling operation.

5.04B.3 SUBMITTALS

(1) Before commencing any operations associated with the construction of water mains in jacked steel sleeves the Contractor shall submit a detailed description of the proposed method of installation including locations and dimensions of jacking/receiving pits, insertion procedures and all shop drawings required for review and approval by the Engineer. These submittals shall include procedural details to allow the Engineer to evaluate the procedure to be used. All pertinent dimensions, material properties, and design calculations must be shown.

(2) Shop drawings shall be submitted in accordance with all applicable provisions of **Subsection 4.05.5 - Shop Drawings**, as required. Design criteria shall be submitted in accordance with all applicable requirements of **Subsection 4.05.6 - Design Criteria**, as required.

(3) The Contractor shall allow a minimum of four (4) weeks for review.

(4) No work associated with the construction of water mains in jacked steel sleeves shall commence until the Contractor receives all required approved shop drawing from the Department of Design and Construction, Division of Infrastructure.

5.04B.4 MATERIALS

(A) Steel carrier pipe shall comply with the requirements of **Division 2 - Specification For Furnishing, Delivering And Laying Steel Pipe And Appurtenances (dated March 1999)** which is made part of the Specifications For Trunk Main Work (dated February 2010). Steel fittings shall comply with the requirements of **Division 2 - Specification For Furnishing, Delivering And Laying Steel Pipe And Appurtenances (dated March 1999)** which is made part of the Specifications For Trunk Main Work (dated February 2010).

(B) Ductile iron carrier pipe shall comply with the requirements of **Section 2.01 - Specifications For Ductile Iron Pipe And Accessories**. Ductile iron fittings shall comply with the requirements of **Section 2.02 - Specifications For Ductile Iron Fittings And Accessories**.

(C) Joints shall be restrained joint, and shall be TR-FLEX, as manufactured by U.S. Pipe Company, Birmingham, Alabama; or approved equal. The joints shall be pressure rated for 150-psi.

(D) Steel Sleeves shall have an outer diameter (O.D.) as shown or specified and shall have a minimum sleeve thickness as specified in table below. The steel shall conform to ASTM A134 (plates: ASTM A283, Grade C) API std. 5L, Grade B. The jacked sleeve shall be designed to withstand jacking thrust as well as external loads. A factor of safety of 2.5 shall be used for jacking thrusts. Hydrostatic tests will not be required for steel sleeves.

Minimum Sleeve O.D.	Minimum Sleeve Thickness
30"	0.532"
36"	0.563"
42"	0.625"
48"	0.688"
54"	0.781"
60"	0.844"
66"	0.938"
72"	1.000"

(E) Grout utilized to fill the voids between the steel sleeve and the water main carrier pipe shall be Low Weight Cement Grout - Mearlcrete Cellular Concrete manufactured by the Mearl Corporation or approved equal.

Low Weight Cement Grout:

(a) Grout shall consist of neat Portland cement, water, Mearlcrete Foam Liquid concentrate and other materials as recommended by the Mearl Corporation or approved equal.

(b) Portland cement shall comply with the requirements of **General Specification 11 - Concrete, as modified in Section 2.15**, and shall be Type II.
(c) Mixing water shall be a maximum of six (6) gallons per bag of cement (water/cement ratio is 0.53), and be potable, free from deleterious amounts of acid, alkali, salts, oils and organic materials.
(d) Wet Density shall be 95-lb/ft³ maximum.
Dry Density shall be 90-lb/ft³ maximum.
Compressive Strength shall be 1,000-psi minimum.

(F) Grout utilized to fill the voids between the outside of the jacked sleeve and the soil shall be Pressure Grout.

Pressure Grout:

(a) Pressure grout shall consist of neat Portland cement or it shall be mixed in a proportion by volume of one (1) part Portland cement and one (1) part sand or it shall be mixed by volume of one (1) part Portland cement to one and one-half (1-1/2) parts lime flour and one-fiftieth (1/50) part Interplast IV.
(b) All parts shall be mixed with clean fresh water to the desired consistency. In no case shall more than eight (8) gallons of water be mixed per bag of cement.

5.04B.5 METHODS

(A) GENERAL

The Contractor shall install jacking and receiving pits properly braced to withstand both external loads (soil, water, etc.), and internal jacking loads. The Contractor shall furnish, install and remove to the extent required; thrust blocks or whatever provisions may be required in driving the sleeve forward. A jacking frame with integrated pipe guides or steel rails or beams embedded in concrete shall be used in the pit for placement and alignment of each piece of sleeve during installation procedures.

The steel sleeve shall be jacked into position by the use of jacks of sufficient capacity to push the pipe and microtunneling machine through the existing soil. Upon completion of each jacked section (jacking pit to receiving pit) the Contractor shall immediately pressure grout from the interior of the steel sleeve in conformance with **Subsection 5.04B.10**.

The Contractor shall follow the recommendations of the pipe manufacturer regarding the installation of the water main carrier pipe. The recommended installation method used by the Contractor shall be such that no damage will occur to the carrier pipe when it is inserted.

The Contractor shall install the water main carrier pipe approximately in the center of the steel sleeve. Water main carrier pipe shall be properly braced and supported with spacers that are electrically insulated from the steel sleeve. The braces/supports/spacers shall be installed and positioned in accordance with the manufacturer's recommendations and shall not inhibit the flow of grout. The Contractor shall submit design and method of bracing prior to installation of carrier pipe for approval by the Engineer. Proper precautions shall be taken by the Contractor to prevent floatation or motion of the carrier pipe during the grouting operation.

The excavated pits shall be dewatered wherever required due to groundwater conditions. The Contractor shall lower and maintain the groundwater level below the invert of the steel sleeve at all times during construction by dewatering means to prevent inflow of water or water and soil into the pit.

(B) CONTROL OF LINE AND GRADE

(1) Lines and grades shall conform to the requirements of **Subsection 1.06.8** and as amended herein. The Contractor shall establish the baselines and benchmarks in accordance with this contract.

(2) The Contractor shall submit to the Engineer copies of field notes used to establish all lines and grades. However, the Contractor remains fully responsible for the accuracy of the Contractor's work.

(3) If there is any movement during construction, it shall be the Contractor's responsibility to detect and correct it as required.

(4) The microtunnel excavation and run of jacked pipe shall be controlled in such a manner that the deviation from grade is not more than one (1) inch nor from line more than three (3) inches. The Contractor shall make note of all possible encumbrances and structures in the line of work, which may restrict clearances.

(C) EQUIPMENT

(1) The microtunnel boring machine shall be capable of controlling the volume of excavated material removed from the excavation face at all times.

(2) The microtunnel-boring machine shall be fully steerable both horizontally and vertically.

(3) Guidance of the microtunnel-boring machine shall be through a remote console, in or adjacent to the jacking pit or shaft. At a minimum, the thrust force, rate of advance, distance along heading, deviation from line and deviation from grade shall be monitored and displayed on the remote console.

(D) SAFETY

The Contractor shall carry out the Contractor's operations in strict accordance with OSHA and the Manufacturer's safety requirements.

(E) CLEANLINESS

The inside of the carrier pipe shall be thoroughly cleaned before installation and kept clean during installation. Pipe ends shall be capped or plugged as necessary to maintain cleanliness throughout installation.

(F) INSTALLATION OF CASING PIPE FOR INSERTION OF GROUT

After the steel sleeve has been installed the Contractor shall drill 4-inch casing pipes from the ground surface down to the top centerline of the steel sleeve. The number of casing pipes placed shall be at a minimum, one at each end of the steel sleeve. The Engineer may order the drilling of additional casing pipes for grouting along the length of the steel sleeve. Payment for all work required for the drilling of additional casing pipe together with fittings, excavation requirements, removal of casing pipe, etc. ordered by the Engineer, shall be made under **Articles 25 and 26** of the Contract.

The Contactor shall wash out the material inside the 4-inch casing pipes, then drill holes in the top of the steel sleeve and install fittings to the ends of the casing pipe that will produce a sealed connection to both the casing pipe and the steel sleeve. These fittings shall provide a sealed connection so that the insertion of grout between the steel sleeve and the carrier pipe can proceed with no leakage of grout to the outside soil area of the steel sleeve.

The Contactor shall remove any debris due to the installation of the casing pipe from the inside of the steel sleeve to the satisfaction of the Engineer.

5.04B.6 QUALIFICATIONS

The microtunneling/pipe jacking Contractor or subcontractor performing the work required under this contract must be experienced in work of this nature and must have successfully completed a minimum of two (2) tunneling projects in the last five (5) years using pressurized face microtunneling/pipe jacking equipment with a closed face tunnel shield and positive controlled face pressure. The Contractor shall submit a description of such projects, which shall include at a minimum, a listing of the locations, dates of projects, owners, pipe types and sizes, type of equipment utilized, maximum line and grade deviations and other information relevant to the issue of the successful completion of such projects.

The microtunneling/pipe jacking machine operator(s) shall have adequate experience in using the same type of equipment required for this project, namely, pressurized face microtunneling/pipe jacking equipment with a closed face tunnel shield and positive, controllable tunnel face pressure.

Prior to the start of work the Contractor will be required to submit the name and resume of the pipe-jacking subcontractor for approval.

5.04B.7 SPECIFIC REQUIREMENTS FOR JACKING

All connections between successive steel sleeve pipe lengths shall be continuously butt-welded. Welds shall be made in conformance with AWS D1.1. Upon completion of a bore (jacking pit to receiving pit) the Contractor shall pressure grout all voids between the outside of the jacked sleeve and the soil and shall install the carrier pipe and completely fill all voids between the inside of the sleeve and the outside of the carrier pipe with low weight cement grout.

5.04B.8 INSPECTION AND TESTING

The entire installation procedure shall be rigorously inspected as herein specified, but inspection shall not relieve the Contractor of responsibility to furnish material and perform work in accordance with the specifications. If at any time it is found that the pipe insertion procedure is not in accordance with these specifications, the pipe so installed will be subject to rejection.

The Contractor shall furnish the Engineer reasonable assistance, without charge, for inspection and for obtaining such information, as the Engineer desires in respect to the progress and manner of the work performed.

After the water main carrier pipe has been inserted into the sleeve it shall be given a combined pressure and leakage test in accordance with the requirements of these specifications.

If a section fails to pass the pressure and leakage test, the Contractor shall do everything necessary to locate, uncover and repair or replace the defective pipe, pipe fitting, or joint, all at the Contractor's own expense.

5.04B.9 CLEANING

Prior to the insertion of the carrier pipe the Contractor will be required to remove and properly dispose of all sediments and deposits from within the steel sleeve.

The Contractor shall furnish all water and pumping equipment necessary for the cleaning operation. After cleaning, the sleeve shall be clean and entirely free from projections that might interfere with the insertion of the carrier pipe through it.

As soon as possible after the completion of the cleaning operation, the Engineer will conduct a visual inspection of the pipe for any defect or leakage so those repairs, if necessary, can be made. No carrier pipe shall be installed until authorized by the Engineer.

5.04B.10 GROUTING

(A) GROUT FILL OUTSIDE JACKED SLEEVE

Upon completion of a jacked section (jacking pit to receiving pit) the Contractor shall immediately pressure grout from the interior of the steel sleeve. Pressure grout shall be placed under pressure to fill all annular voids between the outside of the jacked sleeve and the soil.

Systems of standard pipe, fittings, hose and special grouting outlets embedded in the sleeve shall be provided by the Contractor. Care shall be taken to insure that parts of the system are maintained free from dirt. Cement grout shall be forced under pressure into the grouting connections. Grouting shall start at the lowest connections and shall proceed until grout begins to flow from upper connections. Connections shall then be made to those holes and the operation continued to completion. During the grouting process, each grout plug shall be removed and the grout-mixing machine shall be connected to the hole by means of a hose and nipple cut to the same thread as the screw plug.

The sleeve shall have grout holes equipped with pipe half couplings. Three (3) grout holes spaced one hundred twenty (120) degrees on center shall be installed on each section of pipe. The two (2) inch standard pipe half couplings welded into the holes in the sleeve shall be provided with threaded cast iron plugs. Plugs shall be no less than five-eighths (5/8) inch in diameter.

Apparatus for mixing and placing grout shall be capable of mixing effectively and stirring the grout and then forcing it into the grout connections in a continuous uninterrupted flow. When grouting is completed the grout plugs in each section shall be screwed into the grout holes for their full length and tightened to provide a watertight seal.

The Contractor shall take all necessary precautions to prevent grout from escaping and setting on inner surface of steel sleeve. The Contractor shall remove such grout and restore the surface to its original condition.

The Contractor shall provide the Engineer all facilities necessary for the inspection of pressure grouting operation to ensure complete filling of the annular void. These facilities shall include removing of grout plugs as required for inspection behind the steel sleeve. Any voids found shall be grouted at once as directed by the Engineer.

The Contractor shall keep and furnish to the Engineer an accurate log of grouting operations, pressures, rates of pumping, amount of cement for each change in water/cement ratio and such other data as are required by the Engineer. The log shall be supplied by the Contractor to the Engineer or the Engineer's representative after each shift.

After completion of pressure grouting the water main carrier pipe shall be installed in the center of the steel sleeve.

(B) GROUT FILL AROUND CARRIER PIPE

After the carrier pipe is satisfactorily installed and passes inspection and testing, the carrier pipe shall be secured to the steel sleeve at each end with a 12-inch long concrete plug. Unless otherwise shown on the contract drawings, the Contractor shall submit along with the required submittal in **Subsection 5.04B.3** the design of these concrete plugs. The design of these concrete plugs shall incorporate a method for securing the concrete plugs to the ends of the steel sleeve and carrier pipe so as to be capable of withstanding the grouting pressures without slippage or blow-out at the ends.

After approval by the Engineer the entire annular space between the inside of the steel sleeve and the outside of the water main carrier pipe shall be filled with Low Weight Cement Grout in one continuous uninterrupted operation in a manner to prevent occurrence of any voids between the steel sleeve and the carrier pipe.

The grout fill shall be placed by pneumatic or pumping equipment under a pressure between 10 and 15-psi to ensure that the entire void space has been evenly and completely filled. The pressure must

be continuously monitored and care must be taken to avoid pressures above 15-psi. Equipment and methods of placement of the grout fill will be subject to review by the Engineer.

The volume of the grout being placed shall be monitored and recorded. A comparison between the theoretical volume and the actual volume of grout placed shall be done and any discrepancies shall be brought to the attention of the Engineer.

The Contractor shall also fill the holes used to place the grout.

5.04B.11 MEASUREMENT

The quantity of water main in jacked steel sleeve to be measured for payment shall be the number of linear feet of each size, kind, class and wall thickness of water main carrier pipe together with jacked steel sleeve incorporated in the work, complete, as shown, specified or required, measured horizontally along the center line of water main.

5.04B.12 PRICE TO COVER

The contract price for "WATER MAINS IN JACKED STEEL SLEEVES" shall be the unit price bid per linear foot for each size, kind, class and wall thickness of water main carrier pipe together with jacked steel sleeve and shall cover the cost of all labor, materials, plant, equipment, samples, tests and insurance required and necessary to construct the water main in jacked steel sleeve to the sizes and to the lines and grades shown, including the earth excavation of all materials of whatever nature encountered (See **Section 4.03 - Earth Excavation**); all sheeting and bracing; pumping; bridging; connections; backfilling; jacking and receiving pits; installation of steel sleeve; grouting for soil stabilization; cleaning of carrier pipe and steel sleeve; installation of water main carrier pipe; inspection and testing; grouting required to fill the voids between the inside of steel sleeve and the outside of water main carrier pipe; preparation, submittal and approval of all required shop drawings and designs; obtaining of all necessary permits and furnishing and installing all other items necessary to complete this work and do all work incidental thereto, all in accordance with the contract drawings, specifications and standards and as directed by the Engineer.

In addition, included in the price hereunder shall be the cost of all labor and materials necessary to remove all specified and ordered structures and appurtenances that may be in the jacking and receiving pits and in the line of the work and to do all the work incidental thereto, all in accordance with **Subsections 1.06.12 and 1.06.27** of the specifications and as directed by the Engineer.

Included in the price hereunder shall be the cost of all labor, materials and equipment required to install concrete plugs and for installing and removing 4-inch grouting casing pipes.

Payment for Water Mains In Jacked Steel Sleeves will be made under the Item Number as calculated below:

The Item Numbers for Water Mains In Jacked Steel Sleeves have eleven characters. (The decimal point is considered a character, the third character.)

(1) The first five characters shall define Water Mains In Jacked Steel Sleeves:
60.31

(2) The sixth character shall define the Kind of Water Main Carrier Pipe:
D - Ductile Iron Restrained Joint Pipe
S - Steel Pipe (Double Lap Fillet Welded)

(3) The seventh and eighth characters shall define the Diameter of Water Main Carrier Pipe. (The seventh and eighth characters representing the unit of inches for the Diameter of the Water Main Carrier Pipe.) See examples below:
08 - 8-Inch

20 - 20-Inch
48 - 48-Inch

(4) The ninth character shall define the Class of Ductile Iron Water Main Carrier Pipe or the Wall Thickness of Steel Water Main Carrier Pipe (Wall thickness in 1/8-inch increments):

3 - 3/8-Inch Wall Thickness
4 - 4/8-Inch or 1/2-Inch Wall Thickness
5 - Class 55 or 5/8-Inch Wall Thickness
6 - Class 56 or 6/8-Inch or 3/4-Inch Wall Thickness

(5) The tenth and eleventh characters shall define the Diameter of the Jacked Steel Sleeve Pipe. (The tenth and eleventh characters representing the unit of inches for the Diameter of the Jacked Steel Sleeve Pipe.) See examples below:

30 - 30-Inch
66 - 66-Inch

(6) Examples of Item Numbers together with Description and Pay Unit as provided in the Bid Schedule are provided below:

Item No.	Description	Pay Unit
60.31D48572	48-INCH DUCTILE IRON PIPE CLASS 55 WATER MAIN IN JACKED 72-INCH STEEL SLEEVE	L.F.
60.31D20536	20-INCH DUCTILE IRON PIPE CLASS 55 WATER MAIN IN JACKED 36-INCH STEEL SLEEVE	L.F.
60.31D12630	12-INCH DUCTILE IRON PIPE CLASS 56 WATER MAIN IN JACKED 30-INCH STEEL SLEEVE	L.F.
60.31S48472	48-INCH STEEL PIPE (1/2-INCH WALL THICKNESS) WATER MAIN IN JACKED 72-INCH STEEL SLEEVE	L.F.

By signing in the space provided below, the bidder acknowledges receipt of the eight (8) pages of this Addendum.

THIS ADDENDUM MUST BE SIGNED BY ALL BIDDERS AND ATTACHED TO THEIR BIDS.

G. Saini

GURDIP SAINI, P.E.
Assistant Commissioner/Design

_____
Name of Bidder

By:_____

ATTACH TO CONTRACT DOCUMENTS

THE CITY OF NEW YORK
DEPARTMENT OF DESIGN AND CONSTRUCTION
INFRASTRUCTURE DIVISION
BUREAU OF DESIGN

PROJECT ID: QED1008

FOR THE INSTALLATION OF 60-INCH AND 12-INCH WATER MAINS IN: 54TH STREET BETWEEN FLUSHING AVENUE AND GRAND AVENUE

Together With All Work Incidental Thereto

BOROUGH OF QUEENS

ADDENDUM NO. 6

DATED: May 6, 2013

This Addendum is issued for the purpose of amending the requirements of the contract documents and is hereby made part of said contract documents to the same extent as if it was originally included therein.

Refer to the Bid and Contract Documents, VOLUME 1 OF 3, Page A-1, Attachment 1 - Bid Information;
Change the dates shown for Submission of Bids To: and for Bid Opening: from "May 9, 2013" to read "May 16, 2013."

By signing in the space provided below, the bidder acknowledges receipt of the one (1) page of this Addendum

THIS ADDENDUM MUST BE SIGNED BY ALL BIDDERS AND ATTACHED TO THEIR BIDS.

G. Saini

GURDIP SAINI, P.E.
Assistant Commissioner/Design

_____
Name of Bidder

By:_____

ATTACH TO CONTRACT DOCUMENTS

THE CITY OF NEW YORK
DEPARTMENT OF DESIGN AND CONSTRUCTION
INFRASTRUCTURE DIVISION
BUREAU OF DESIGN

PROJECT ID: QED1008

FOR THE INSTALLATION OF 60-INCH AND 12-INCH WATER MAINS IN: 54TH STREET BETWEEN FLUSHING AVENUE AND GRAND AVENUE

Together With All Work Incidental Thereto

BOROUGH OF QUEENS

ADDENDUM NO. 7

DATED: May 14, 2013

This Addendum is issued for the purpose of amending the requirements of the contract documents and is hereby made part of said contract documents to the same extent as if it was originally included therein.

(1) **Refer** to the Bid and Contract Documents, VOLUME 1 OF 3, Page A-1, Attachment 1 - Bid Information;
Change the dates shown for Submission of Bids To: and for Bid Opening: from "May 16, 2013" to read "May 30, 2013."

(2) **Refer** to the Bid and Contract Documents, VOLUME 1 OF 3;
Delete pages B-3 thru B-23 of the Bid Schedule in their entirety;.
Substitute pages B-3 (REVISION # 1) thru B-24 (REVISION # 1) of the Bid Schedule which are attached to the end of this addendum.

(3) **Refer** to the Bid and Contract Documents, VOLUME 3 OF 3, Schedule "A", Page SA-2;
Delete from the second paragraph the words, "180 consecutive calendar days (ccds)";
Substitute the words, "270 consecutive calendar days (ccds)".

(4) **Refer** to the Contract Drawings, Sheet 5 of 10 and Sheet 6 of 10;
Delete all places on these sheets wherever it reads "30-Inch Sleeve Pipe", or "30-Inch Casing Pipe";
Substitute the words, "48-Inch Steel Sleeve Pipe".

(5) **Refer** to the Bid and Contract Documents, VOLUME 3 OF 3, Addendum No. 2;
Add the "OCMC TRAFFIC STIPULATIONS" dated May 8, 2013, consisting of two (2) pages which are attached to the end of this addendum, that are "AMENDED FOR MICROTUNNELING RELATED TO EXCAVATION UNDERNEATH RAILROAD" to the end of Addendum No. 2. This traffic stipulation is only for tunneling related work and is in addition to and does not amend the original traffic stipulation attached to Addendum No. 2, which governs for all other work.

(6) **Refer** to the Bid and Contract Documents, VOLUME 3 OF 3, Addendum No. 2;

Add the "SPECIAL PROVISIONS FOR NOISE CONTROL" consisting of nine (9) pages which are attached to the end of this addendum, to the end of Addendum No. 2.

(7) **Refer** to Addendum No. 5, Page A5-1, **Section 5.04B - Water Mains In Jacked Steel Sleeves**:
Add the following to **Subsection 5.04B.2**:

The Contractor will be permitted to submit for approval an alternate method of jacking of a steel sleeve other than by microtunneling techniques. If the alternate pipe jacking tunneling technique is not capable of tunneling through rock and boulders of all sizes, and requires the manual excavation, removal and disposal of rock and boulders at the tunnel face, then no separate or additional payment will be made for this manual rock and boulder excavation, removal and disposal. The cost for all labor, materials, plant, equipment and insurance required and necessary to excavate, remove and dispose of all rock and boulders within the tunnel section shall be deemed included in the prices bid per linear foot for the respective "WATER MAIN IN JACKED STEEL SLEEVE" items.

(8) **Refer** to the Bid and Contract Documents, Volume 3 of 3, Addendum No. 5, page A5-5, **Subsection 5.04B.7 - Specific Requirements For Jacking**;
Add the following as the second sentence in the paragraph: "However, mechanical Permalok joint connections will be permitted in lieu of butt welded joints between successive steel casing pipe."

(9) **Refer** to Standard Sewer Specifications (August 1, 2009), Page V-172:
Add the following new **Section 5.26C**:

SECTION 5.26C
SOIL STABILIZATION

The Contractor is advised that due to poor soil conditions and presents of boulders, the following soil stabilization procedure shall be adopted prior to mircotunneling/jacking the 72-Inch and 48-Inch Steel Sleeves for the 60-Inch Steel Water Main carrier pipe and the 12-Inch Ductile Iron Water Main carrier pipe, respectively.

5.26C.1 SCOPE

The target grout zones shall be approximately for the 72-Inch Steel Sleeve - 80-feet long, 14-feet wide and 14-feet high; and, for the 48-Inch Steel Sleeve - 70-feet long, 12-feet wide and 12-feet high to prevent soil runs while microtunneling/jacking the Steel Sleeves. The target zone should provide complete coverage of the bore path to at least 4-feet beyond the edges of the pipes on all sides. The grouting shall be performed through Tube-A-Manchette grout pipes installed horizontally from the jacking pit. The pipes will be install in an approximate 5-foot to 6-foot grid across the treatment area.

The work covered by this section consists of furnishing all supervision, labor, materials and equipment necessary to perform the required chemical grouting as hereinafter specified and as outlined on the contract drawings.

The Contractor's attention is directed to SKETCH "A" which is attached to the end of this addendum.

5.26C.2 INTENT

The purposes of the chemical grouting program are to increase the strength and stiffness of the groutable soils in order to reduce settlements due to subsequent additional loading and/or microtunneling and open trench cut excavation.

5.26C.3 QUALIFICATIONS

The work shall be performed by a grouting subcontractor specialized in chemical grouting. The Contractor shall establish, to the satisfaction of the Engineer, that the planning for chemical grouting

and the actual placement of grout pipes and the mixing and injection of chemical grout is performed by an experienced grouting subcontractor that has completed at least ten (10) chemical grouting projects of similar scope and purpose, and that is experienced with the use of the specified continuous mixing procedure, automatic recording equipment, and types of chemical grout.

Prior to the start of work, the Contractor will be required to submit the name and resume of the chemical grouting subcontractor for approval.

5.26C.4 CHEMICAL GROUT MATERIAL

Structural - Structural chemical grout will be composed of liquid silicate, approved reactant, water and accelerator, if required. The design chemical grout mix shall be such that, when injected into the soil, the unconfined compressive strength of the grouted soil shall average at least 75-psi.

Sodium Silicate - The base material for the structural chemical grout shall be liquid sodium silicate, which shall have a specific gravity of 1.4 to 1.5 (41.5° to 48.3°Baume) and a silicate to soda ratio in the range of 3.20 to 3.35. The minimum sodium silicate concentration shall be fifty (50) percent of the mix by volume. The sodium silicate should be delivered in sealed containers or certified tank truck and shall be accompanied by the suppliers certificate of origin. Sodium silicate in ungelled liquid form, while not considered toxic, is strongly alkaline and shall be handled by authorized personnel only.

Reactant - The reactant shall be of organic base type and shall, when properly mixed with the other grout components, provide a permanent, irreversible gel with controllable gel times. The resulting gels shall exhibit less than two (2) percent syneresis in injected sample in thirty (30) days when mixed with appropriate amounts of sodium silicate, water and accelerator, and shall not exhibit objectionable odors such as ammonia.

Accelerator - The accelerator, if required, shall be technical grade, water soluble calcium chloride or other approved metal salt and shall contain a minimum amount of insoluble.

Water - Water used with grout shall be free of impurities that will affect the grout.

5.26C.5 EQUIPMENT

General - All chemical grouting equipment shall be of a type, capacity and mechanical capability suitable for doing the work. The equipment shall be maintained in first class operating condition at all times. Any grout hole that is lost or damaged due to mechanical failure of the equipment, inadequacy of grout supply, or improper injection procedure shall be properly filled and replaced by another hole, drilled by the Contractor at the Contractors expense.

Pumps - The chemical grout plant shall be of the continuous mixing type and shall be capable of supplying, proportioning, mixing and pumping the grout with a set time between 5 and 50-minutes. Batch-type systems will not be permitted. Each main pump shall be equipped with recording, positive displacement meters. The meters shall be constructed of materials that are non-corrodible for the intended products and shall operate independently of the viscosity of the metered fluid. The pumping unit shall be capable of varying the rate of pumping while maintaining the component ratios constant.

Piping And Accessories - The pumping unit shall be equipped with piping and/or hoses of adequate capacity to carry the base grout and reactant solutions separately to the point of mixing. The hoses shall come together in a "Y" fitting containing check valves to prevent backflow. The "Y" fitting shall be followed by a suitable baffling chamber. A sampling valve shall be placed beyond the point of mixing and the baffling chamber, and shall be easily accessible for sampling mixed grout. A water flushing connection or valve shall be placed behind the "Y" to facilitate flushing the grout from the mixing hose and baffle between grouting sessions. Distribution of proportioned grout, under pressure, to the grouting locations shall be monitored by separate, automatic recording, flow rate indicators and gages.

Chemical Tanks - Chemicals shall be stored in metal tanks, suitably protected from accidental discharge by valving and other necessary means. Tank capacity shall be sufficient to supply at least one (1) day's worth of grouting materials so as not to interrupt the work in the event of chemical delivery delays.

Testing - The Contractor shall provide at the site all necessary chemical quality control testing apparatus, including but not limited to: hydrometers, pH paper, graduates, and other devices that are required to conduct chemical material acceptance tests, chemical proportioning tests, and grout quality test for proper quality control of the work. The grouting subcontractor shall submit certified laboratory testing results documenting the required performance of the proposed chemical grouting at least thirty (30) days prior to the commencement of injection operations.

5.26C.6 INSTALLATION OF GROUT PIPES

Grout pipes may be installed horizontally, inclined, or vertically to obtain the specified minimum grout coverage. The grout pipes shall be the sleeve-port type. After being placed in a borehole, the sleeve-port grout pipes shall be encased in a continuous brittle mortar sheath. An internal double packer shall be used to inject grout at a specific sleeve-port.

5.26C.7 CHEMICAL GROUTING PROCEDURES

Work Plan - Prior to the start of the drilling work, the grouting subcontractor shall submit a detailed Chemical Grouting Work Plan for the area, specifying the locations and grout-pipe installation procedures. The Work Plan shall show the basis for establishing grout target volumes at each primary and secondary grout port.

Grouting Mixing Method - The method of injection for chemical grouting shall be the continuous mixing method, with the proper amounts of sodium silicate base material, water, reactants, and accelerator automatically proportioned and continuously supplied at proper flow rates and pressures. The batch system of mixing grout shall not be permitted. The base material and the water-accelerator-catalyst solution shall pass through parallel separate hoses to a suitable baffling chamber near the top of the hole. A sampling cock, to allow frequent gel time checks, shall be placed after baffling chamber. Suitable check-valves shall be placed in the grout lines at the proper locations to prevent backflow.

Injection Procedures - Using double packers, chemical grouts shall be injected into the design zones through grout ports in the sleeve pipes. The grouting pressure for any one pipe shall not be more than 2-psi per foot of overburden. Temporary very high injection pressures will be permitted to crack open sleeve-ports, but these pressures will not be permitted for longer than one (1) minute duration. In any event, the rate of injection into any port shall not exceed three (3) gallons per minute.

Gel Times - All grouts shall have a gel time between 10 and 50-minutes, with most grout having gel times in the range of 20 to 40-minutes. Samples shall be obtained for gel time checks at least once every hour of pumping or for every 1,000-gallons of grout, whichever is more frequent.

Record Keeping - Accurate and timely records of all chemical grouting shall be kept by the grouting subcontractor and submitted to the Engineer. These records shall include, but not limited to, grout mix, gel time, injection data and time, injection pressure and rate, injection volumes, and exact injection location. In addition, these data shall be displayed in an acceptable chart-type format that facilitates rapid visual evaluation of the results of the work. This display shall be updated daily.

Quality Assurance - Prior to the commencement of tunneling through a grouted zone, the Contractor shall demonstrate, using either soil sampling methods or geophysical methods such as radar, acoustic velocity measurements, post grout test borings as required by the Engineer, or other means, satisfactory to the Engineer, that the grouting zones have been thoroughly impregnated and stabilized with chemical grout. Tunneling through grouted areas shall not commence until the chemical grouting work has been completed and accepted by the Engineer.

5.26C.8 MEASUREMENT

Placement Of Grout Pipes - Grout pipe placement shall be measured for payment on the basis of the number of linear-feet of grout pipe properly placed.

Injection Of Chemical Grout - Injection of chemical grout shall be measured for payment by the gallon of liquid chemical grout properly mixed and injected.

Quality Control And Testing - Quality Control and Testing of the grouted zones will be paid under the chemical grout items per gallon and will not be paid separately.

The cost of assembling all plant, personnel and equipment at the site preparatory to initiating the global chemical grouting program, and the cost of removing it there from when the chemical grouting program has been completed, will be included in the contract lump-sum price for "MOBILIZATION".

5.26C.9 PRICE TO COVER

The cost of Soil Stabilization, as described above, shall be made under the contract prices bid for items labeled "DRILLING AND INSTALLING OF HORIZONTAL TUBE-A-MANCHETTE GROUT PIPE FOR SOIL STABILIZATION" measured per linear foot, and "FURNISHING AND INJECTING OF CHEMICAL GROUT FOR SOIL STABILIZATION" measured per gallon. This cost of drilling and installing of grout pipe and for furnishing and injecting of properly mixed chemical grout shall cover all labor; materials; plant; equipment; samples; tests and insurance; all sheeting and bracing; pumping; fencing; connection; cleaning up; record keeping; approval drawings; quality control and testing of the grouted zones; obtaining of necessary permits and furnishing and installing all other items necessary to complete this work and do all work incidental thereto all accordance with the plans and specifications and as directed by the Engineer. Costs for all work required and necessary to performed complete the soil stabilization shall be deemed included in these items.

Payment for Soil Stabilization will be made under the Item Numbers as calculated below:

The Item Numbers for Soil Stabilization have seven characters. (The decimal point is considered a character, the third character.)

(1) The first five characters shall define Soil Stabilization:
70.54

(2) The sixth and seventh characters shall define the Drilling And Installing Of Horizontal Tube-A-Manchette Grout Pipe For Soil Stabilization or Furnishing And Injecting Of Chemical Grout For Soil Stabilization:

GP - Drilling And Installing Of Horizontal Tube-A-Manchette Grout Pipe For Soil Stabilization
CG - Furnishing And Injecting Of Chemical Grout For Soil Stabilization

(3) The Item Numbers together with Description and Pay Unit as provided in the Bid Schedule are provided below:

Item No.	Description	Pay Unit
70.54GP	DRILLING AND INSTALLING OF HORIZONTAL TUBE-A-MANCHETTE GROUT PIPE FOR SOIL STABILIZATION	L.F.
70.54CG	FURNISHING AND INJECTING OF CHEMICAL GROUT FOR SOIL STABILIZATION	GAL.

(10) In response to questions from a contractor (See Attachment "1" consisting of two (2) pages) the answers to the questions are as following:

Answer to questions:

Question No. 1: See Article No. 2 of this addendum on page A7-1.

Question No. 2: See Article No. 5 of this addendum on page A7-1.

Question No. 3: (a) See Article No. 5 of this addendum on page A7-1.
(b) By increasing the diameter of the sleeve pipe from 30" to 48", the tunneling machine will be able to remove boulders. If the Engineer determines in writing that it cannot remove the boulders encountered, then the Contractor will be compensated for manual removal of boulders in accordance with **Section 5.26A** of the Sewer Specifications.
(c) See Article No. 7 of this addendum on page A7-2.

Question No. 4: See Article No. 8 of this addendum on page A7-2.

Question No. 5: The quantity specified will remain the same.

Question No. 6: See Article No. 3 of this addendum on page A7-1.

Question No. 7: (a) See Addendum No. 2, page A2-3, Notice To Bidders, paragraph (13), Contractor is required to obtain all railroad permits. Also, see Addendum No. 2, page A2-14, **Section 1.06.24A, (A), (c), (2) (a) Obtaining permits**.
(b) There are force account agreements and items that are part of this contract. Payment for railroad's personnel will be made as per force account agreements between City and railroads.

Question No. 8: Information provided by New York & Atlantic Railways states that they operate 25 to 30 cars of freight, (Garbage) per day along those tracks. The operation slows to about 15 cars on the weekends. New York & Atlantic Railways should be contacted for all remaining inquiries in regard to all other railroad operations schedules.

(11) In response to questions from a contractor (See Attachment "2" consisting of one (1) page) the answers to the questions are as following:

Answer to question: (a) See Article No. 7 of this addendum.
(b) See Article No. 9 of this addendum.

(12) In response to questions from a contractor (See Attachment "3" consisting of one (1) page) the answers to the questions are as following:

Answer to question: (a) See Article No. 7 of this addendum.

(13) In response to questions from a contractor (See Attachment "4" consisting of one (1) page) the answers to the questions are as following:

Answer to questions:

Question No. 1: (a) Cost of the carrier pipes within the tunnel sections shall be deemed included in the prices bid for the respective "WATER MAIN IN JACKED STEEL SLEEVE" items. No separate or addition payment will be made for these carrier pipes.
(b) Items provide for the furnishing and installing of 12" and 60" water mains are for water main pipe laid in open trench only.

Questions No. 2, 3, 4, 5 and 6: See Article No. 2 of this addendum.

By signing in the space provided below, the bidder acknowledges receipt of the seven (7) pages of this Addendum plus thirty-nine (39) pages of attachments

THIS ADDENDUM MUST BE SIGNED BY ALL BIDDERS
AND ATTACHED TO THEIR BIDS.

G. Saini

GURDIP SAINI, P.E.
Assistant Commissioner/Design

_____
Name of Bidder

By:_____

NEW YORK CITY DEPARTMENT OF DESIGN AND CONSTRUCTION
DIVISION OF INFRASTRUCTURE - BUREAU OF DESIGN

Contract PIN 8502012WM0006C
Project ID QED1008

BID SCHEDULE

NOTE: (1) The Agency may reject a bid if it contains unbalanced bid prices. An unbalanced bid is considered to be one containing lump sum or unit items which do not reflect reasonable actual costs plus a reasonable proportionate share of the Bidder's anticipated profit, overhead costs, and other indirect costs, anticipated for the performance of the items in question.

(2) The following bid prices on Unit Price Contracts are to be paid for the actual quantities of the several classes of work in the completed work or structure, and they cover the cost of all work, labor, material, tools, plant and appliances of every description necessary to complete the entire work, as specified, and the removal of all debris, temporary work and appliances.

(3) PLEASE BE SURE A LEGIBLE BID IS ENTERED, IN INK, FOR EACH ITEM. Alterations must be initialed in ink by the bidder.

(4) The Extended Amount entered in Column 5 shall be the product of the Estimated Quantity in Column 2 times the Unit Price Bid in Column 4.

(5) Prospective bidders must examine the Bid Schedule carefully and, before bidding, must advise the Commissioner, in writing, if any pages are missing, and must request that such missing pages be furnished them. The pages of this Bid Schedule are numbered consecutively, as follows: B - 3 through B - 24 [REVISION # 1]

05/13/2013
10:50AM
BID PAGES

NEW YORK CITY DEPARTMENT OF DESIGN AND CONSTRUCTION
DIVISION OF INFRASTRUCTURE - BUREAU OF DESIGN

Contract PIN 8502012WM0006C
Project ID QED1008

COL. 1 ITEM NUMBER (SEQUENCE NO.)	COL. 2 ENGINEER'S ESTIMATE OF QUANTITIES	COL. 3 CLASSIFICATIONS	COL. 4 UNIT PRICES (IN FIGURES) DOLLARS	CTS	COL. 5 EXTENDED AMOUNTS (IN FIGURES) DOLLARS	CTS
4.02 AF-R (001)	375.0 S.Y.	ASPHALTIC CONCRETE WEARING COURSE, 2" THICK	$	.	$	.
4.02 AG (002)	750.0 S.Y.	ASPHALTIC CONCRETE WEARING COURSE, 3" THICK	$	.	$	.
4.02 CA (003)	158.0 TONS	BINDER MIXTURE	$	.	$	.
4.04 B (004)	25.0 C.Y.	CONCRETE BASE FOR PAVEMENT, VARIABLE THICKNESS FOR TRENCH RESTORATION, CLASS B-32	$	.	$	.

NEW YORK CITY DEPARTMENT OF DESIGN AND CONSTRUCTION
DIVISION OF INFRASTRUCTURE - BUREAU OF DESIGN

Contract PIN 8502012WM0006C
Project ID QED1008

COL. 1 ITEM NUMBER (SEQUENCE NO.)	COL. 2 ENGINEER'S ESTIMATE OF QUANTITIES	COL. 3 CLASSIFICATIONS	COL. 4 UNIT PRICES (IN FIGURES) DOLLARS	CTS	COL. 5 EXTENDED AMOUNTS (IN FIGURES) DOLLARS	CTS
4.04 DC (005)	105.0 C.Y.	CONCRETE BASE FOR PAVEMENT, 9" THICK, CLASS B-32	$	.	$	.
4.09 AD (006)	90.0 L.F.	STRAIGHT STEEL FACED CONCRETE CURB (18" DEEP)	$	.	$	.
4.13 AAS (007)	275.0 S.F.	4" CONCRETE SIDEWALK (UNPIGMENTED)	$	.	$	.
4.18 A (008)	1.0 EACH	MAINTENANCE TREE PRUNING (UNDER 12" CAL.)	$	.	$	.

NEW YORK CITY DEPARTMENT OF DESIGN AND CONSTRUCTION
DIVISION OF INFRASTRUCTURE - BUREAU OF DESIGN

Contract PIN 8502012WM0006C
Project ID QED1008

COL. 1 ITEM NUMBER (SEQUENCE NO.)	COL. 2 ENGINEER'S ESTIMATE OF QUANTITIES	COL. 3 CLASSIFICATIONS	COL. 4 UNIT PRICES (IN FIGURES) DOLLARS	CTS	COL. 5 EXTENDED AMOUNTS (IN FIGURES) DOLLARS	CTS
4.18 B (009)	1.0 EACH	MAINTENANCE TREE PRUNING (12" TO UNDER 18" CAL.)	$	.	$	.
4.21 (010)	200.0 P/HR	TREE CONSULTANT	$	.	$	.
50.41S6E10 (011)	25.0 L.F.	10" D.I.P. CLASS 56 SANITARY SEWER, ENCASED IN CONCRETE	$	.	$	.
53.11DR (012)	25.0 L.F.	TELEVISION INSPECTION AND DIGITAL AUDIO-VISUAL RECORDING OF SEWERS	$	.	$	.

NEW YORK CITY DEPARTMENT OF DESIGN AND CONSTRUCTION
DIVISION OF INFRASTRUCTURE - BUREAU OF DESIGN

Contract PIN 8502012WM0006C
Project ID QED1008

COL. 1 ITEM NUMBER (SEQUENCE NO.)	COL. 2 ENGINEER'S ESTIMATE OF QUANTITIES	COL. 3 CLASSIFICATIONS	COL. 4 UNIT PRICES (IN FIGURES) DOLLARS	CTS	COL. 5 EXTENDED AMOUNTS (IN FIGURES) DOLLARS	CTS
6.02 AAN (013)	250.0 C.Y.	UNCLASSIFIED EXCAVATION	$	.	$	.
6.02 XSCW (014)	643.0 C.Y.	INCREMENTAL COST FOR USING SPECIAL CARE WORK METHODS NEAR (FROM 3 FEET TO 50 FEET) TRANSIT FACILITIES	$	.	$	.
6.25 RS (015)	300.0 S.F.	TEMPORARY SIGNS	$	.	$	.
6.26 (016)	500.0 L.F.	TIMBER CURB	$	.	$	.

NEW YORK CITY DEPARTMENT OF DESIGN AND CONSTRUCTION
DIVISION OF INFRASTRUCTURE - BUREAU OF DESIGN

Contract PIN 8502012WM0006C
Project ID QED1008

COL. 1 ITEM NUMBER (SEQUENCE NO.)	COL. 2 ENGINEER'S ESTIMATE OF QUANTITIES	COL. 3 CLASSIFICATIONS	COL. 4 UNIT PRICES (IN FIGURES) DOLLARS	CTS	COL. 5 EXTENDED AMOUNTS (IN FIGURES) DOLLARS	CTS
6.28 AA (017)	50.0 L.F.	LIGHTED TIMBER BARRICADES	$	.	$	.
6.29 TTM (018)	30.0 EACH	TEMPORARY TUBULAR MARKERS	$	.	$	.
6.40 B (019)	15.0 MONTH	ENGINEER'S FIELD OFFICE (TYPE B)	$	.	$	.
6.44 (020)	290.0 L.F.	THERMOPLASTIC REFLECTORIZED PAVEMENT MARKINGS (4" WIDE)	$	.	$	.

NEW YORK CITY DEPARTMENT OF DESIGN AND CONSTRUCTION
DIVISION OF INFRASTRUCTURE - BUREAU OF DESIGN

Contract PIN 8502012WM0006C
Project ID QED1008

COL. 1 ITEM NUMBER (SEQUENCE NO.)	COL. 2 ENGINEER'S ESTIMATE OF QUANTITIES	COL. 3 CLASSIFICATIONS	COL. 4 UNIT PRICES (IN FIGURES) DOLLARS	CTS	COL. 5 EXTENDED AMOUNTS (IN FIGURES) DOLLARS	CTS
6.49 (021)	290.0 L.F.	TEMPORARY PAVEMENT MARKINGS (4" WIDE)	$	.	$	.
6.52 (022)	1,560.0 P/HR	UNIFORMED FULL-TIME FLAGPERSON	$	.	$	.
6.53 (023)	290.0 L.F.	REMOVE EXISTING LANE MARKINGS (4" WIDE)	$	.	$	.
6.87 (024)	140.0 EACH	PLASTIC BARRELS	$	.	$	.

NEW YORK CITY DEPARTMENT OF DESIGN AND CONSTRUCTION
DIVISION OF INFRASTRUCTURE - BUREAU OF DESIGN

Contract PIN 8502012WM0006C
Project ID QED1008

COL. 1 ITEM NUMBER (SEQUENCE NO.)	COL. 2 ENGINEER'S ESTIMATE OF QUANTITIES	COL. 3 CLASSIFICATIONS	COL. 4 UNIT PRICES (IN FIGURES) DOLLARS	CTS	COL. 5 EXTENDED AMOUNTS (IN FIGURES) DOLLARS	CTS
60.11R612 (025)	66.0 L.F.	FURNISHING AND DELIVERING 12-INCH DUCTILE IRON RESTRAINED JOINT PIPE (CLASS 56)	$	.	$	.
60.12D12 (026)	78.0 L.F.	LAYING 12-INCH DUCTILE IRON PIPE AND FITTINGS	$	.	$	.
60.13M0A24 (027)	1.0 TONS	FURNISHING AND DELIVERING DUCTILE IRON MECHANICAL JOINT 24-INCH DIAMETER AND SMALLER FITTINGS, INCLUDING WEDGE TYPE RETAINER GLANDS	$	.	$	.
60.21SP5T60 (028)	170.0 L.F.	FURNISHING, DELIVERING AND LAYING 60-INCH STRAIGHT STEEL PIPE, 5/8-INCH WALL THICKNESS	$	.	$	.

NEW YORK CITY DEPARTMENT OF DESIGN AND CONSTRUCTION
DIVISION OF INFRASTRUCTURE - BUREAU OF DESIGN

Contract PIN 8502012WM0006C
Project ID QED1008

COL. 1 ITEM NUMBER (SEQUENCE NO.)	COL. 2 ENGINEER'S ESTIMATE OF QUANTITIES	COL. 3 CLASSIFICATIONS	COL. 4 UNIT PRICES (IN FIGURES) DOLLARS	CTS	COL. 5 EXTENDED AMOUNTS (IN FIGURES) DOLLARS	CTS
60.22BR5T60 (029)	90.0 L.F.	FURNISHING, DELIVERING AND LAYING 60-INCH STEEL BENDS AND REDUCERS, 5/8-INCH WALL THICKNESS	$	.	$	.
60.25PSO (030)	1,810.0 LBS.	FURNISHING, DELIVERING AND INSTALLING PLATE STEEL OUTLETS ON STEEL PIPE, ACCESS MANHOLE OUTLETS WITH COVERS, AND NUTS AND BOLTS COMPLETE	$	.	$	.
60.29CP (031)	1.0 L.S.	FURNISHING, INSTALLING AND TESTING CORROSION CONTROL AND/OR CATHODIC PROTECTION SYSTEM	$	.	$	.
60.31D12648 (032)	70.0 L.F.	12-INCH DUCTILE IRON PIPE (CLASS 56) WATER MAIN IN JACKED 48-INCH STEEL SLEEVE	$	.	$	.

NEW YORK CITY DEPARTMENT OF DESIGN AND CONSTRUCTION
DIVISION OF INFRASTRUCTURE - BUREAU OF DESIGN

Contract PIN 8502012WM0006C
Project ID QED1008

COL. 1 ITEM NUMBER (SEQUENCE NO.)	COL. 2 ENGINEER'S ESTIMATE OF QUANTITIES	COL. 3 CLASSIFICATIONS	COL. 4 UNIT PRICES (IN FIGURES) DOLLARS	CTS	COL. 5 EXTENDED AMOUNTS (IN FIGURES) DOLLARS	CTS
60.31S60672 (033)	80.0 L.F.	60-INCH STEEL PIPE (3/4-INCH WALL THICKNESS) WATER MAIN IN JACKED 72-INCH STEEL SLEEVE	$	.	$	.
63.11MH (034)	1.5 TONS	FURNISHING, DELIVERING AND INSTALLING 36-INCH CAST IRON MANHOLE HEADS AND COVERS	$	.	$	.
63.11MS (035)	10.0 EACH	FURNISHING, DELIVERING AND INSTALLING MANHOLE STEPS TYPE PS2-PF	$	.	$	.
64.11ST (036)	4.0 EACH	WITHDRAWING AND REPLACING HOUSE SERVICES USING SMALLER THAN 1-1/2-INCH SCREW TAPS	$	.	$	.

NEW YORK CITY DEPARTMENT OF DESIGN AND CONSTRUCTION
DIVISION OF INFRASTRUCTURE - BUREAU OF DESIGN

Contract PIN 8502012WM0006C
Project ID QED1008

COL. 1 ITEM NUMBER (SEQUENCE NO.)	COL. 2 ENGINEER'S ESTIMATE OF QUANTITIES	COL. 3 CLASSIFICATIONS	COL. 4 UNIT PRICES (IN FIGURES) DOLLARS	CTS	COL. 5 EXTENDED AMOUNTS (IN FIGURES) DOLLARS	CTS
64.12COLT (037)	15.0 L.F.	CUTTING AND OFFSETTING HOUSE SERVICE WATER CONNECTIONS (LESS THAN 3-INCH DIAMETER)	$	.	$	.
65.11BR (038)	30.0 LBS.	FURNISHING, DELIVERING AND INSTALLING BANDS, RODS, WASHERS, ETC., COMPLETE, FOR RESTRAINING JOINTS	$	.	$	.
65.21PS (039)	20.0 L.F.	FURNISHING AND PLACING POLYETHYLENE SLEEVE **Unit price bid shall not be less than: $ 0.50**	$	.	$	.
65.31FF (040)	5,956.0 S.F.	FURNISHING, DELIVERING AND PLACING FILTER FABRIC **Unit price bid shall not be less than: $ 0.10**	$	.	$	.

NEW YORK CITY DEPARTMENT OF DESIGN AND CONSTRUCTION
DIVISION OF INFRASTRUCTURE - BUREAU OF DESIGN

Contract PIN 8502012WM0006C
Project ID QED1008

COL. 1 ITEM NUMBER (SEQUENCE NO.)	COL. 2 ENGINEER'S ESTIMATE OF QUANTITIES	COL. 3 CLASSIFICATIONS	COL. 4 UNIT PRICES (IN FIGURES) DOLLARS	CTS	COL. 5 EXTENDED AMOUNTS (IN FIGURES) DOLLARS	CTS
65.51PC (041)	10.0 C.Y.	FURNISHING AND PLACING CAST-IN-PLACE CONCRETE CLASS 40 AND PRECAST CONCRETE CLASS 50	$	.	$	.
65.61SS (042)	780.0 LBS.	FURNISHING, DELIVERING AND PLACING STRUCTURAL, REINFORCING AND MISCELLANEOUS STEEL	$	.	$	.
65.71SG (043)	204.0 C.Y.	FURNISHING, DELIVERING AND PLACING SCREENED GRAVEL OR SCREENED BROKEN STONE BEDDING	$	.	$	.
7.13 B (044)	9.0 MONTH	MAINTENANCE OF SITE **Unit price bid shall not be less than: $ 7,500.00**	$	.	$	.

NEW YORK CITY DEPARTMENT OF DESIGN AND CONSTRUCTION
DIVISION OF INFRASTRUCTURE - BUREAU OF DESIGN

Contract PIN 8502012WM0006C
Project ID QED1008

COL. 1 ITEM NUMBER (SEQUENCE NO.)	COL. 2 ENGINEER'S ESTIMATE OF QUANTITIES	COL. 3 CLASSIFICATIONS	COL. 4 UNIT PRICES (IN FIGURES) DOLLARS	CTS	COL. 5 EXTENDED AMOUNTS (IN FIGURES) DOLLARS	CTS
7.36 (045)	285.0 L.F.	PEDESTRIAN STEEL BARRICADES	$	.	$	.
7.88 AA (046)	1.0 L.S.	RODENT INFESTATION SURVEY AND MONITORING **Unit price bid shall not be less than: $ 825.00**	$	.	$	.
7.88 AB (047)	70.0 EACH	RODENT BAIT STATIONS **Unit price bid shall not be less than: $ 60.00**	$	.	$	.
7.88 AC (048)	70.0 EACH	BAITING OF RODENT BAIT STATIONS **Unit price bid shall not be less than: $ 8.50**	$	.	$	.

NEW YORK CITY DEPARTMENT OF DESIGN AND CONSTRUCTION
DIVISION OF INFRASTRUCTURE - BUREAU OF DESIGN

Contract PIN 8502012WM0006C
Project ID QED1008

COL. 1 ITEM NUMBER (SEQUENCE NO.)	COL. 2 ENGINEER'S ESTIMATE OF QUANTITIES	COL. 3 CLASSIFICATIONS	COL. 4 UNIT PRICES (IN FIGURES) DOLLARS	CTS	COL. 5 EXTENDED AMOUNTS (IN FIGURES) DOLLARS	CTS
7.88 AD (049)	8.0 BLOCK	WATERBUG BAIT APPLICATIONS **Unit price bid shall not be less than: $ 65.00**	$	.	$	.
70.21DK (050)	180.0 S.Y.	DECKING	$	.	$	.
70.31FN (051)	535.0 L.F.	FENCING **Unit price bid shall not be less than: $ 2.00**	$	.	$	.
70.51EO (052)	117.0 C.Y.	EXCAVATION OF BOULDERS IN OPEN CUT **Unit price bid shall not be less than: $ 75.00**	$	.	$	.

NEW YORK CITY DEPARTMENT OF DESIGN AND CONSTRUCTION
DIVISION OF INFRASTRUCTURE - BUREAU OF DESIGN

Contract PIN 8502012WM0006C
Project ID QED1008

COL. 1 ITEM NUMBER (SEQUENCE NO.)	COL. 2 ENGINEER'S ESTIMATE OF QUANTITIES	COL. 3 CLASSIFICATIONS	COL. 4 UNIT PRICES (IN FIGURES) DOLLARS	CTS	COL. 5 EXTENDED AMOUNTS (IN FIGURES) DOLLARS	CTS
70.52ET (053)	48.0 C.Y.	EXCAVATION OF BOULDERS IN TUNNEL SECTION	$	.	$	.
70.54CG (054)	19,270.0 GAL.	FURNISHING AND INJECTING OF CHEMICAL GROUT FOR SOIL STABILIZATION	$	.	$	.
70.54GP (055)	1,485.0 L.F.	DRILLING AND INSTALLING OF HORIZONTAL TUBE-A-MANCHETTE GROUT PIPE FOR SOIL STABILIZATION	$	.	$	.
70.61RE (056)	10.0 C.Y.	ROCK EXCAVATION	$	.	$	.

NEW YORK CITY DEPARTMENT OF DESIGN AND CONSTRUCTION
DIVISION OF INFRASTRUCTURE - BUREAU OF DESIGN

Contract PIN 8502012WM0006C
Project ID QED1008

COL. 1 ITEM NUMBER (SEQUENCE NO.)	COL. 2 ENGINEER'S ESTIMATE OF QUANTITIES	COL. 3 CLASSIFICATIONS	COL. 4 UNIT PRICES (IN FIGURES) DOLLARS	CTS	COL. 5 EXTENDED AMOUNTS (IN FIGURES) DOLLARS	CTS
70.71SB (057)	1.0 C.Y.	STONE BALLAST **Unit price bid shall not be less than: $ 15.00**	$	.	$	.
70.81CB (058)	141.0 C.Y.	CLEAN BACKFILL **Unit price bid shall not be less than: $ 15.00**	$	.	$	.
70.91SW12 (059)	120.0 S.F.	FURNISHING AND PLACING SHEETING AND BRACING IN TRENCH FOR WATER MAIN PIPE 12-INCH IN DIAMETER AND LESS	$	.	$	.
73.11AB (060)	1.0 C.Y.	ADDITIONAL BRICK MASONRY **Unit price bid shall not be less than: $ 62.50**	$	.	$	.

NEW YORK CITY DEPARTMENT OF DESIGN AND CONSTRUCTION
DIVISION OF INFRASTRUCTURE - BUREAU OF DESIGN

Contract PIN 8502012WM0006C
Project ID QED1008

COL. 1 ITEM NUMBER (SEQUENCE NO.)	COL. 2 ENGINEER'S ESTIMATE OF QUANTITIES	COL. 3 CLASSIFICATIONS	COL. 4 UNIT PRICES (IN FIGURES) DOLLARS	CTS	COL. 5 EXTENDED AMOUNTS (IN FIGURES) DOLLARS	CTS
73.21AC (061)	12.0 C.Y.	ADDITIONAL CONCRETE **Unit price bid shall not be less than: $ 75.00**	$	.	$	.
73.31AE0 (062)	13.0 C.Y.	ADDITIONAL EARTH EXCAVATION INCLUDING TEST PITS (ALL DEPTHS) **Unit price bid shall not be less than: $ 22.50**	$	.	$	.
73.41AG (063)	17.0 C.Y.	ADDITIONAL SELECT GRANULAR BACKFILL **Unit price bid shall not be less than: $ 15.00**	$	.	$	.
73.51AS (064)	100.0 LBS.	ADDITIONAL STEEL REINFORCING BARS **Unit price bid shall not be less than: $ 1.00**	$	.	$	.

NEW YORK CITY DEPARTMENT OF DESIGN AND CONSTRUCTION
DIVISION OF INFRASTRUCTURE - BUREAU OF DESIGN

Contract PIN 8502012WM0006C
Project ID QED1008

COL. 1 ITEM NUMBER (SEQUENCE NO.)	COL. 2 ENGINEER'S ESTIMATE OF QUANTITIES	COL. 3 CLASSIFICATIONS	COL. 4 UNIT PRICES (IN FIGURES) DOLLARS	CTS	COL. 5 EXTENDED AMOUNTS (IN FIGURES) DOLLARS	CTS
76.11CR (065)	1.0 L.S.	CONSTRUCTION REPORT	$	.	$	.
76.21MR (066)	1.0 L.S.	MONITORING AND POST-CONSTRUCTION REPORT	$	.	$	.
8.02 B (067)	80.0 L.F.	SPECIAL CARE EXCAVATION AND RESTORATION FOR CURB WORK	$	.	$	.
9.04 HW (068)	1.0 F.S.	ALLOWANCE FOR ANTI-FREEZE ADDITIVE IN CONCRETE PRICE BID SHALL BE FOR THE FIXED SUM OF $ 5,000.00	$ 5,000	.00	$ 5,000	.00

NEW YORK CITY DEPARTMENT OF DESIGN AND CONSTRUCTION
DIVISION OF INFRASTRUCTURE - BUREAU OF DESIGN

Contract PIN 8502012WM0006C
Project ID QED1008

COL. 1 ITEM NUMBER (SEQUENCE NO.)	COL. 2 ENGINEER'S ESTIMATE OF QUANTITIES	COL. 3 CLASSIFICATIONS	COL. 4 UNIT PRICES (IN FIGURES) DOLLARS	CTS	COL. 5 EXTENDED AMOUNTS (IN FIGURES) DOLLARS	CTS
UTL-6.01.8 (069)	3.0 EACH	GAS SERVICES CROSSING TRENCHES AND/OR EXCAVATIONS (S6.01) **Unit price bid shall not be less than: $ 465.00**	$	.	$	.
UTL-6.01.9 (070)	2.0 EACH	GAS MAIN CROSSING WATER MAIN UP TO 20" IN DIAMETER (S6.01) **Unit price bid shall not be less than: $ 485.00**	$	.	$	.
UTL-6.03 (071)	100.0 L.F.	REMOVAL OF ABANDONED GAS FACILITIES. ALL SIZES. (S6.03) **Unit price bid shall not be less than: $ 15.00**	$	.	$	.
UTL-6.03.1 (072)	100.0 L.F.	REMOVAL OF ABANDONED GAS FACILITIES WITH POSSIBLE COAL TAR WRAP. ALL SIZES. (S6.03) **Unit price bid shall not be less than: $ 25.00**	$	.	$	.

NEW YORK CITY DEPARTMENT OF DESIGN AND CONSTRUCTION
DIVISION OF INFRASTRUCTURE - BUREAU OF DESIGN

Contract PIN 8502012WM0006C
Project ID QED1008

COL. 1 ITEM NUMBER (SEQUENCE NO.)	COL. 2 ENGINEER'S ESTIMATE OF QUANTITIES	COL. 3 CLASSIFICATIONS	COL. 4 UNIT PRICES (IN FIGURES) DOLLARS	CTS	COL. 5 EXTENDED AMOUNTS (IN FIGURES) DOLLARS	CTS
UTL-6.04 (073)	3.0 EACH	ADJUST HARDWARE TO GRADE USING SPACER RINGS/ADAPTORS. (STREET REPAVING.) (S6.04) **Unit price bid shall not be less than: $ 35.00**	$	.	$	.
UTL-6.05 (074)	2.0 EACH	ADJUST HARDWARE TO GRADE BY RESETTING. (ROAD RECONSTRUCTION.) (S6.05) **Unit price bid shall not be less than: $ 65.00**	$	.	$	.
UTL-6.06 (075)	150.0 C.Y.	SPECIAL CARE EXCAVATION AND BACKFILLING (S6.06) **Unit price bid shall not be less than: $ 180.00**	$	.	$	.
UTL-6.07 (076)	50.0 C.Y.	TEST PITS FOR GAS FACILITIES (S6.07) **Unit price bid shall not be less than: $ 100.00**	$	.	$	.

NEW YORK CITY DEPARTMENT OF DESIGN AND CONSTRUCTION
DIVISION OF INFRASTRUCTURE - BUREAU OF DESIGN

Contract PIN 8502012WM0006C
Project ID QED1008

COL. 1 ITEM NUMBER (SEQUENCE NO.)	COL. 2 ENGINEER'S ESTIMATE OF QUANTITIES	COL. 3 CLASSIFICATIONS	COL. 4 UNIT PRICES (IN FIGURES) DOLLARS	CTS	COL. 5 EXTENDED AMOUNTS (IN FIGURES) DOLLARS	CTS
UTL-GCS-2WS (077)	1.0 F.S.	GAS INTERFERENCES AND ACCOMMODATIONS PRICE BID SHALL BE FOR THE FIXED SUM OF $ 25,000.00	$ 25,000	.00	$ 25,000	.00

NEW YORK CITY DEPARTMENT OF DESIGN AND CONSTRUCTION
DIVISION OF INFRASTRUCTURE - BUREAU OF DESIGN

Contract PIN 8502012WM0006C
Project ID QED1008

COL. 1 ITEM NUMBER (SEQUENCE NO.)	COL. 2 ENGINEER'S ESTIMATE OF QUANTITIES	COL. 3 CLASSIFICATIONS	COL. 4 UNIT PRICES (IN FIGURES) DOLLARS	CTS	COL. 5 EXTENDED AMOUNTS (IN FIGURES) DOLLARS	CTS
		SUB-TOTAL:			$	
6.39 A (078)	1.0 LUMP SUM	MOBILIZATION PRICE BID SHALL NOT EXCEED 4% OF THE ABOVE SUB-TOTAL PRICE.			$	
		TOTAL BID PRICE:			$	

PLEASE BE SURE A LEGIBLE BID IS ENTERED FOR EACH ITEM.

THE BIDDER SHALL INSERT THE TOTAL BID PRICE IN THE BID FORM ON PAGE C-4 OF THIS BID BOOKLET.

NEW YORK CITY

Department of Transportation

JANETTE SADIK-KHAN, Commissioner

OCMC TRAFFIC STIPULATIONS

May 8, 2013

OCMC FILE NO: QEC 12-419
CONTRACT NO: QED 1008
PROJECT: WATER MAIN AND SANITARY SEWER CONNECTION

LOCATION(S): 54TH STREET BETWEEN FLUSHING AVENUE AND GRAND AVENUE

PERMISSION IS HEREBY GRANTED TO THE **NEW YORK CITY DEPARTMENT OF DESIGN AND CONSTRUCTION** AND ITS DULY AUTHORIZED AGENT, TO ENTER UPON AND RESTRICT THE FLOW OF TRAFFIC AT THE ABOVE LOCATION AND ITS LOCAL ADJACENT STREETS FOR THE PURPOSE OF CARRYING OUT THE ABOVE NOTED PROJECT, SUBJECT TO THE STIPULATIONS, AS NOTED BELOW:

AMENEDED FOR MICROTUNNELING RELATED TO EXCAVATION UNDERNEATH RAILROAD TRACKS

A. SPECIAL STIPULATIONS

1. **EMBARGOES** – A CONSTRUCTION EMBARGO WILL APPLY TO THOSE LOCATIONS BELOW WHICH FALL WITHIN THE **HOLIDAY EMBARGO** OR ANY OTHER SPECIAL EVENT EMBARGOES SUCH AS PUBLISHED BY THE BUREAU OF PERMIT MANAGEMENT AND CONSTRUCTION CONTROL.
2. **BIKE LANES** – IF WORK IS IN OR AFFECTING A BIKE LANE, THE CONTRACTOR MUST POST ADVANCE WARNING SIGNS 350 FEET AND 200 FEET PRIOR TO THE WORK ZONE STATING **"CONSTRUCTION IN BIKE LANE AHEAD PROCEED WITH CAUTION"**, AND ALSO POST A SIGN AT THE WORK ZONE STATING **"CONSTRUCTION IN BIKE LANE PROCEED WITH CAUTION"**. SUCH SIGNS SHALL BE ORANGE, 3' X 3', DIAMOND-SHAPED WITH 4" BLACK LETTERING. SIGNS SHALL BE POSTED IN ACCORDANCE WITH THE FEDERAL MANUAL ON UNIFORM TRAFFIC CONTROL DEVICES (MUTCD).
3. **BUS STOPS** – THE CONTRACTOR SHALL PROVIDE WRITTEN NOTICE TO NYC DOT OCMC AND NEW YORK CITY TRANSIT (NYCT) A MINIMUM OF FIVE (5) WEEKS IN ADVANCE FOR LANE/STREET CLOSURES THAT AFFECT BUS ROUTES/BUS STOPS.
4. **METERS** – THE CONTRACTOR MAY NOT REMOVE OR RELOCATE PARKING METERS WITHOUT FIRST OBTAINING APPROVAL FROM NYCDOT PARKING METER DIVISION AT 718-894-8651.
5. **ACCESS TO ABUTTING PROPERTIES** – THE CONTRACTOR SHALL COORDINATE ALL ACTIVITIES WITH ABUTTING PROPERTY OWNERS TO ENSURE ACCESS IS PROVIDED TO/FROM ENTRANCES/DRIVEWAYS AT ALL TIMES.
6. **AUTHORIZED PARKING** – PRIOR TO PERFORMING WORK WHICH IMPACTS AUTHORIZED PARKING, THE CONTRACTOR SHALL SUBMIT IN WRITING, AND COPY OCMC-STREETS, A REQUEST TO OCCUPY SPACE CURRENTLY USED BY AUTHORIZED VEHICLES. APPROVAL MUST BE RECEIVED FROM AUTHORIZED PARKING PRIOR TO OCCUPYING THESE AREAS.
7. **NOTIFICATION** – THE CONTRACTOR MUST AT LEAST TWO (2) WORKING DAYS BEFORE THE START OF CONSTRUCTION NOTIFY THE NYC FIRE DEPARTMENT, NYC POLICE DEPARTMENT, NYCEMS, LOCAL COMMUNITY BOARD, BOROUGH PRESIDENT'S OFFICE-CHIEF ENGINEER, NYCDOT OCMC OFFICE, AND ALL ABUTTING PROPERTY OWNERS.
8. **ENHANCED MITIGATIONS**
   - "NO STANDING ANYTIME-TEMPORARY CONSTRUCTION" SIGNS AND TEMPORARY PAVEMENT MARKINGS SHALL BE INSTALLED AND MAINTAINED AS WARRANTED BY THE MAINTENANCE AND PROTECTION OF TRAFFIC (MPT) REQUIRED TO FACILITATE TRAFFIC MOVEMENTS THROUGH THE WORK ZONE. ALL TEMPORARY SIGNS AND PAVEMENT MARKINGS SHALL BE REMOVED UPON COMPLETION OF THE PROJECT.
   - COMMUNITY OUTREACH SHALL BE PROVIDED FOR THE DURATION OF THE PROJECT.

B. MAINTENANCE AND PROTECTION OF TRAFFIC

1. **54TH STREET BETWEEN FLUSHING AVENUE AND GRAND AVENUE**
   - Work hours shall be as follows: 24 hours a day seven days a week
   - The contractor shall maintain one 12 foot lane for local and emergency traffic to gain access through street.
   - The contractor must meet noise requirement and provide access to all property owners on street segment.
   - The contractor shall maintain 5-foot clear sidewalk for pedestrians at all times.
   - The contractor shall not interfere with the right of way of the Rail Road without written approval from proper authority.

NYC Department of Transportation
Bureau of Permit Management and Construction Control
55 Water Street - 7th Floor, New York, NY 10041
T: 212.839.9621 F: 212.839.8970
www.nyc.gov/dot

OCMC FILE NO: QEC 12-419
CONTRACT NO: QED 1008
PROJECT: WATER MAIN AND SANITARY SEWER CONNECTION

C. GENERAL NOTES

1. **THIS IS NOT A PERMIT**. THIS STIPULATION SHEET MUST BE SUBMITTED WITH ALL REQUESTS FOR PERMITS PERTAINING TO THE ABOVE CONTRACT AND PRESENT AT THE WORK SITE ALONG WITH ALL ACTIVE CONSTRUCTION PERMITS WHEN THE APPROVED WORK IS BEING PERFORMED.
2. ALL RELOCATION WORK BY THE UTILITIES SUCH AS; CON EDISON, TELEPHONE, GAS AND CABLE COMPANIES SHALL PRECEDE THE CONTRACTORS' START OF WORK ON ALL AFFECTED ROADWAYS IN THE IMPACTED CONTRACT AREA.
3. THE CONTRACTOR IS ADVISED THAT OTHER CONTRACTORS MAY BE WORKING IN THE GENERAL AREA DURING THE TERM OF THIS STIPULATION. IN WHICH EVENT, THE CONTRACTOR MAY REQUIRE MODIFICATIONS BY THE OCMC-STREETS.
4. THE PERMITTEE IS NOT AUTHORIZED TO ENTER, OCCUPY OR USE ANY PUBLICLY-OWNED OR PRIVATELY OWNED, NON-PAVED, LANDSCAPE OR NON-LANDSCAPED LOCATION WITHOUT SPECIFIC WRITTEN PERMISSION. WHEN THE LOCATION IS WITHIN THE RIGHT-OF-WAY OF A LIMITED-ACCESS ARTERIAL HIGHWAY, **WRITTEN** APPROVAL FROM THE NYCDOT OCMC-HIGHWAYS IS REQUIRED. WHEN THE LOCATION IS WITHIN THE RIGHT-OF-WAY OF A PUBLIC STREET OR PUBLIC PARK, **WRITTEN** APPROVAL FROM THE NEW YORK CITY DEPARTMENT OF TRANSPORTATION OR NEW YORK CITY DEPARTMENT OF PARKS AND RECREATION IS REQUIRED. WHEN THE LOCATION IS WITHIN THE RIGHT-OF-WAY OF ANY OTHER JURISDICTION SUCH AS PRIVATE PROPERTY, STATE, FEDERAL ETC., IT IS THE PERMITTEE'S RESPONSIBILITY TO DETERMINE THE PROPERTY OWNER AND OBTAIN THE WRITTEN APPROVAL.
5. THE PERMITTEE SHALL ADHERE TO THE NYCDOT BUREAU OF BRIDGES' SPECIAL PROVISIONS FOR LANDSCAPE PROTECTION, MAINTENANCE AND RESTORATION, ITEMS 1.18.15 THROUGH 1.18.19, WHENEVER AND WHEREVER ANY OF THE PERMITTEE'S ACTIVITIES OCCUR WITHIN A LIMITED ACCESS ARTERIAL HIGHWAY RIGHT - OF - WAY.
6. NO DEVIATION OR DEPARTURE FROM THESE STIPULATIONS WILL BE PERMITTED WITHOUT THE PRIOR WRITTEN APPROVAL FROM THE OCMC-STREETS. REQUEST FOR SUCH MODIFICATIONS SHALL BE SUBMITTED TO THE OFFICE OF THE OCMC-STREETS, NEW YORK CITY DEPARTMENT OF TRANSPORTATION, A MINIMUM OF TWENTY (20) DAYS IN ADVANCE FOR CONSIDERATION.
7. FOR THIS PROJECT THE CONTRACTOR SHALL FURNISH, INSTALL AND MAINTAIN ALL NECESSARY ADVANCE WARNING AND DETOUR SIGNS, TEMPORARY CONTROL DEVICES, BARRICADES, LIGHTS AND FLASHING ARROW BOARDS IN ACCORDANCE WITH THE "MANUAL ON UNIFORM TRAFFIC CONTROL DEVICES," THE TYPICAL SCHEMES INCLUDED IN THIS SPECIFICATION; AND AS ORDERED BY THE ENGINEER-IN-CHARGE AND THE OCMC-STREETS.
8. THE CONTRACTOR SHALL BE RESPONSIBLE FOR IDENTIFYING HIS CONSTRUCTION SIGNAGE. THE IDENTIFICATION SHALL INCLUDE THE CONTRACTOR'S NAME, SPONSORING AGENCY NAME AND THE CONTRACT NUMBER. THE IDENTIFICATION SHALL BE PLACED ON THE BACK OF THE SIGN. THE LETTERING SHALL BE THREE (3) INCHES HIGH.
9. THE OCMC-STREETS RESERVES THE RIGHT TO VOID OR MODIFY THESE STIPULATIONS SHOULD CONSTRUCTION FAIL TO COMMENCE WITHIN TWO (2) YEARS OF THE SIGNED DATE OF THESE STIPULATIONS.
10. THE CONTRACTOR MUST COMPLY WITH ALL CONSTRUCTION EMBARGOS ISSUED BY THE NYCDOT INCLUDING THE HOLIDAY EMBARGO.

JOSEPH F. NETTO
EXECUTIVE DIRECTOR
OCMC-STREETS

XIOMARA AGUILERA
PROJECT MANAGER
OCMC-STREETS

JPN/db

SPECIAL PROVISIONS
FOR NOISE CONTROL

(A) NOISE CONTROL: The Contractor is directed to Title 24, Chapter 2 of the Administration Code of the City of New York, known as the "New York City Noise Code" by the Department of Environmental Protection. The provisions of this code and its most recent additions and revisions shall apply to this contract. In the event of a conflict between the requirements of the New York City Noise Code and the requirements of Noise Control contained in these special notes, the more stringent of the two shall apply.

The Contractor shall plan and carry out work on this Project to ensure that the noise from construction equipment and activities does not exceed the limits specified herein. The noise abatement operations and conditions specified shall be carried out by the Contractor to limit noise in project and adjacent areas. The Contractor shall conduct a continuous educational effort for the workers on the site to ensure that they are aware of their roles in minimizing noise propagating from the site.

In order to monitor noise abatement operations the Contractor shall employ services of "Noise Control Specialist" for the duration of construction activity. The Contractor shall submit qualifications and experience of the prospective specialist/firm to the Engineer for prior approval. The specialist/firm must satisfy the eligibility requirements of qualifications and work experience as required by the NYCDEP.

The monitoring protocol shall be as follows:

(a) There shall be one (1) outdoor and one (1) indoor monitoring station for each work area or 1,000-feet of street length whichever is less.

(b) Monitoring of noise level shall be done prior to start of construction and during construction for each station at the same work hours specified in the contract.

(c) Locations of monitoring stations shall be recommended by the noise control specialist for approval of the Engineer.

(d) Engineer shall provide indoor station locations to the Contractor after ascertaining availability of the said station from the Community Board.

Should the Contractor fail to carry out the noise abatement operations and conditions specified herein, the Engineer shall have the authority to suspend all work until such time as the Engineer deems that the Contractor has complied with the requirements.

The following additional requirements for noise control shall apply to this contract:

(1) Noise Level Requirements For Construction Equipment:

(a) The Contractor shall ensure that all Contractor and Subcontractor equipment, of the types listed in Table A to be used on-site for a total duration greater than 5-days, shall be tested for compliance with the stated noise emission limits during the first day of use on the construction site or at an alternative site acceptable to the Engineer.

(b) All equipment as described in (a) above shall be retested at 6-month intervals while in use on site.

(c) All compliance tests shall be performed by the Contractor.

(d) For each piece of equipment tested, the Contractor shall provide a noise report to the Engineer as shown in Figure A.

(e) Equipment of the types listed in Table A, as described above, shall not be used on-site without valid certificates of noise compliance.

(f) The Contractor shall provide to the Engineer two (2) noise meters meeting the requirements of **Paragraph (2)(d)** herein. Two (2) acoustic calibrators of the type recommended by the meter manufacturer shall also be provided.

TABLE A

CONSTRUCTION EQUIPMENT NOISE EMISSION LIMITS:
MEASURED AT 50-FEET FROM CONSTRUCTION EQUIPMENT

Equipment Category	Noise Level, dBA(SLOW)
Auger	83
Backhoe	80
Bar Bender	80
Cherry Picker	80
Chain Saw	86
Compactor	80
Compressor	70
Concrete Mixer	86
Concrete Pump	82
Concrete or Diamond Saw	90
Crane	86
Crawler Miller	90
Dozer	86
Front End Loader	80
Generator	82
Gradall	86
Grader	86
Jackhammer	88
Man Lift	80
Mounted Impact Hammer	95
Paver	86
Pneumatic Tools	86
Roller	80
Scraper	86
Shotcrete Liner (tire-mounted)	79
Striper (walk-behind)	80
Tractor	84
Traffic Line Remover	80
Truck (including truck-mounted equipment)	84
Vibrator	80
Vibratory Pile Driver	95
All Other Equipment with Engines Larger than 3750W	86
Impact Pile Driver	105-dBC(FAST)

FIGURE A

CERTIFICATE OF EQUIPMENT NOISE COMPLIANCE

Contractor Name: _____
Contract Name & Number: _____

Equipment Type: _____
Manufacturer & Model Number: _____
Identification Number: _____
Rated Power & Capacity: _____
Operating Condition During Test: _____

Measured Sound Levels at 6 to 15-meters:

Measured Values and Distance:
Engine-Powered or Concrete-Breaking Equipment:
Right Side: _____ dBA(SLOW), at _____ meters
Left Side: _____ dBA(SLOW), at _____ meters
Impact Pile Driving Equipment:
Right Side: _____ dBC(FAST), at _____ meters
Left Side: _____ dBC(FAST), at _____ meters

Equivalent Values at 50-Feet Distance:
Engine-Powered or Concrete-Breaking Equipment:
Right Side: _____ dBA(SLOW).
Left Side: _____ dBA(SLOW).
Impact Pile Driving Equipment:
Right Side: _____ dBC(FAST).
Left Side: _____ dBC(FAST).

Maximum Values Allowed for this Equipment: _____ dBA(SLOW) at 15-meters
_____ dBC(FAST) at 15-meters

If equipment sound level exceeds maximum value allowed, indicate action taken to achieve compliance:

_____

_____

_____

Name, Work Address & Phone No. of NYSDOT Inspector _____

_____

_____

_____

Authorized Signature: _____ Date: _____

CONTRACTOR'S ACCEPTANCE: _____ Date: _____

(2) Noise Level Test Procedures Of Construction Equipment:

(a) All engine-powered equipment shall be operated by the Contractor or Contractor's representative at high idle (maximum governed rpm) under full load conditions during the tests.

(b) Portable and mounted impact hammers, such as hoe rams and jackhammers to be used to concrete breaking, shall be tested during the first day of actual operation at the construction site under maximum load conditions as rated by the equipment manufacturer.

(c) Pile driving equipment shall be tested at the construction site under maximum load conditions as rated by the manufacturer.

(d) All noise certification measurements shall be performed with an instrument that is in compliance with the criteria for a Type 1 (Precision) or Type 2 (General Purpose) Sound Level Meter as defined in the current revision of ANSI Standard S1.4. An acoustic calibrator of the type recommended by the sound level meter manufacturer shall be used prior to all measurements.

(e) If possible, measurements shall be made at 50-feet (±1.5-feet) from the right and left sides of the equipment casing, at a height of 5-feet above ground level, with the equipment operating as indicated in items (a), (b) or (c) above for a minimum period of 1-minute. Measurements made at less than 50-feet, because of space limitations at the test site, shall be reduced by the values given in Table B to estimate the 50-feet sound level.

TABLE B

ADJUSTMENTS FOR CLOSE-IN EQUIPMENT NOISE MEASUREMENTS

Distance (Feet)	Measurement Values to be Subtracted from Measured Sound Level to Estimate Sound Level at 50-Feet (dBA)
20 to under 21	8
21 to under 23	7
23 to under 26	6
26 to under 29	5
29 to under 33	4
33 to under 37	3
37 to under 41	2
41 to under 47	1
47 to under 50	0

(3) Compliance With Equipment Noise Level Requirements:

(a) The Engineer shall retain a copy of the noise report from the Contractor with each piece of equipment used on the project of the types listed in Table A. The report shall be on the form shown in Figure A with certification by the noise control specialist hired by the Contractor that equipment noise emissions do not exceed those prescribed.

(b) If the noise levels obtained during the tests exceed those specified in Table A the Contractor shall promptly modify or alter such equipment and retest, or substitute other equipment to meet the noise level requirements.

(c) Upon compliance, (including the certification date and equipment identification number) the Engineer will keep the noise reports readily available on file in the Construction field office for inspection upon request.

(d) The Certification of Noise Compliance will remain valid for a period of 6-months only. Delays caused by certification refusal or by time lost in improving the rejected equipment or finding alternate acceptable equipment shall not be a basis for any monetary or time delay claims or for avoidance of late completion penalties.

(e) All equipment shall be subject to spot noise level testing by the Engineer at the Engineer's discretion as necessary to determine that the equipment in use meets the requirements specified in Table A. For this purpose, the Contractor shall furnish noise-measurement instrumentation that complies with the standards specified in **Paragraph (2)(d)**. If such tests are requested by the Engineer, the Contractor shall locate and operate the equipment as directed by the Engineer so as to facilitate the measurements. The Engineer shall provide the Contractor with a copy of the results of the measurements. If such tests demonstrate that any equipment does not comply with the requirements specified in Table A, its Certificate of Noise Compliance shall be revoke and equipment shall be taken out of use until compliance is achieved. A new Certificate of Noise Compliance will then be issued.

(4) Construction Noise Level Exposure Limits:

(a) In no case shall the public be exposed to construction noise levels exceeding 100-dBA (SLOW) or to impulsive noise levels exceeding 125-dBC (FAST).

(b) Construction activities shall be conducted in such a manner that the equivalent noise level (Leq) over any one-hour period does not exceed 85-dBA at any noise-sensitive locations (e.g. residence and hotels).

(5) Construction Noise Level Exposure Test Procedures:

(a) All noise exposure measurements will be performed with an integrating sound level meter. An acoustic calibrator will be used prior to all measurements.

(b) The measurement microphone of the sound level meter shall be fitted with an appropriate windscreen, and will be located 1.5-meters above the ground and at least 5-feet away from the nearest sound-reflective surface for the tests.

(c) Noise exposure measurements will be taken at noise-sensitive locations closest to the construction activities at least once each week and as dictated by construction activities. Measurement periods at each location shall be a minimum of one (1) hour.

(d) Construction noise exposure measurements will coincide with periods of maximum noise-generating construction activity, and will be performed during the construction phase or activity that the greatest potential to create annoyance or to exceed the noise exposure limits.

(6) Compliance With Construction Noise Level Exposure Limits:

(a) Construction noise exposure data will be collected by the Contractor on a weekly basis. The noise report will include:
   (1) a sketch indicating the locations of the measurements and of all nearby construction equipment operating during the measurement period,
   (2) the measured maximum A-weighted noise level at each location, in terms of dBA (SLOW),
   (3) the measured maximum C-weighted noise level, in terms of dBC (FAST), and,
   (4) the measured one-hour Leq (in dBA).

(b) In the event that the measured noise levels exceed the limits specified in **Paragraph (4)** above, the Engineer will immediately notify the Contractor and the Contractor shall implement corrective actions as directed by the Engineer.

(c) All construction activities will be subject to spot noise level testing by the Engineer at the Engineer's discretion as necessary to determine that the noise levels meet the exposure

limits specified in **Paragraph (4)** above. If such tests demonstrate that the noise levels exceed the specified limits, the Contractor shall implement corrective actions as directed by the Engineer.

(7) General Requirements For Construction Equipment Noise Control:

(a) The Contractor shall minimize the use of impact devices, such as jackhammers, pavement breakers, and hoe rams. Where possible, concrete crushers or pavement saws shall be used rather than hoe rams for tasks such as grillage removal and pavement demolition.

(b) All pneumatic impact tools and equipment used at the construction site shall have intake and exhaust mufflers recommended by the manufacturers thereof, to meet relevant noise ordinance limitations.

(c) All impact devices (i.e. jackhammers and pavement breakers) shall be equipped with acoustically attenuating shields or shrouds recommended by the manufacturers thereof, to meet relevant noise ordinance limitations.

(d) Hoppers, conveyors transfer points, storage bins, and chutes shall be line or covered with sound-deadening material.

(e) The Contractor shall minimize the use of air or gasoline-driven hand tools.

(f) All other equipment, including internal combustion engines, shall have mufflers and shield paneling recommended by the manufacturers thereof.

(8) General Operational Requirements For Construction Noise Control:

(a) The Contractor shall operate equipment so as to minimize banging, clattering, buzzing, and other annoying types of noises, especially near noise-sensitive locations.

(b) The Contractor, to the extent feasible, shall configure the construction site in a manner that keeps noisier equipment and activities as far as possible from noise-sensitive locations and nearby buildings.

(c) The Contractor shall minimize noise from the use of backup alarms near residential buildings by using self-adjusting, ambient noise-sensitive backup alarms that meet OSHA regulations.

(d) In no case shall the above restrictions limit the Contractor's responsibility for compliance with all applicable Federal, state and local safety ordinances and regulations and other sections of these construction specifications.

(9) Acoustic Shed Requirements:

(a) All noise-generating mechanical equipment that is operated by the Contractor at any time other than weekdays between the hours of 7:00 AM and 6:00 PM shall be enclosed within an acoustic shed. Such equipment includes, but is not limited to, generators for traffic sign boards and lighting.

(b) Acoustic sheds shall consist of three-sided, closed-top enclosures, oriented such that the open end of the shed faces away from residential or hotel buildings.

(c) The shed shall be constructed of 0.5-inch plywood sheeting, or other acceptable material weighing at least 1.5-pounds per square foot, on timber framing with no gaps at joints or corners. Gaps between the bottom edge of the shed panels and the ground shall not exceed 1-inch in width and shall be closed off with solid strips of rubber, neoprene or other suitably dense material.

(d) The inside of the shed shall be lined with glass fiber or mineral wool type sound-absorbing material at least 2-inches thick, protected by wire mesh or perforated sheets that have at least 30-percent open area.

(10) Cost Of Work:

(a) The cost of all labor, materials, equipment, insurance necessary for noise abatement measures as described in this section, any necessary modifications of construction methods or equipment and any delays to construction due to work suspension due to non-compliance with noise control requirements or due to necessary modifications to construction methods for compliance with the noise control requirements is deemed included in the prices bid for the items of work for which the equipment is used.

(K) ADDITIONAL NOISE CONTROL REQUIREMENTS FOR CAPITAL PROJECT NO. MED609: Since the construction work under Capital Project No. MED609 which is located in the vicinity of Lincoln Center and various schools, the Contractor shall be subject to the following additional noise limits below. No additional payment will be made for this work, the cost of which shall be deemed included in the prices bid for the items of work for which the equipment is used.

(1) All construction activities for Capital Project No. MED609 shall be conducted between the hours specified in the OCMC Traffic Stipulations, OCMC File No: MEC-10-302, attached to the end of this Addendum, except that it shall be subject to the sound levels in (Item (2)) below. Extension of construction activities beyond Monday through Friday may be granted by the Engineer on a case-by-case basis for reasons of safety.

(2) Sound levels due to construction activities shall not exceed a 30-minute Leq of 80-dB(A) when measured at business/commercial structures.

Sound levels due to construction activities when measured at the property line of residential structures*, shall not exceed the following 30-minute Leq levels:

(a) (Monday through Friday):

7:00 a.m. to 6:00 p.m. ———————————75-dB(A)

6:00 p.m. to 11:00 p.m. ———————————65-dB(A)

11:00 p.m. to 7:00 a.m. the following day ————60-dB(A)

* For noise abatement purposes, during their hours of use, schools and other noise sensitive facilities such as child and/or patient care centers and houses of worship, etc., are considered residential structures.

No construction activities shall be conducted on National Holidays until 7:00 a.m. the next day.

(b) Routine Maintenance:

Saturday's 7:00 a.m. to 6:00 p.m. ——————65-dB(A)

(c) Shaft Ventilation, Dewatering Maintenance or Watering for Underground Concrete Curing when no other construction activities are being conducted. ————55-dB(A)

(3) The construction site shall be fenced with a substantial tight-boarded and tight to ground fence, at least 10-feet high, made of exterior grade plywood, and gates shall be so lined as well to form street level sound barriers. To meet the required sound level standards, materials such as precast concrete providing equivalent or better sound barrier attenuation may be substituted for the plywood, subject to the Engineer's approval.

The Contractor shall submit for review by the Engineer and accepted by the Bureau of Environmental Compliance, Division of Noise Abatement, Department of Environmental Protection, any changes in fence barrier height necessary to comply with the noise standards of (Item (2)).

(4) All construction activities involved with the proposed microtunneling/pipe jacking operations under this contract including, but not limited to, Spoils Removal System shall be subject to all noise level standards described herein.

(5) Ready-Mix Concrete On-Site Management:

For delivery of ready-mix concrete to the site and transfer down the shaft, a truck unloading area shall be established on the site and shall be provided with an acoustic enclosure. The enclosure shall include a framework so that the truck and its auxiliary concrete pump, if any, which delivers concrete via passive ducts or conveyors to the shaft is all located in an acoustically enclosed structure so as to meet the noise standards of (Item (2)). Concrete may be delivered to the site between 7:00 a.m. and 6:00 p.m. Extension of concrete pouring operations to 8:00 p.m. may be granted by the Engineer on a case-by-case basis for reasons of safety or urgent engineering necessity.

(6) Truck Routing and Control:

(a) Scheduling of trucks to and from the site shall be controlled so as not to have trucks standing on streets with engines idling. Any queuing of trucks shall be restricted to a designated on-site area as far from noise sensitive areas as possible.

(b) Trucks for muck transport shall use DOT designated routes to enter and leave the site.

(c) Ready-mix concrete trucks to and from the construction site shall be via DOT designated truck routes.

(d) Any truck movement into or out of the site will be permitted via Amsterdam (10th) Avenue.

(7) (a) When hoists, conveyor belt or other material moving mechanisms are used to move material, equipment and workers into and out of the shaft, this equipment shall be powered by electricity supplied by an available electric power company.

(b) Shaft excavation equipment, pumps, compressors and all other ancillary stationary equipment shall be powered by electric power supplied by an available electric power company.

(c) Shaft ventilation, pumping equipment and any activity necessary to perform watering for concrete curing that requires a power source, shall be powered by electric power supplied by an available electric company.

(d) Equipment that is powered by other than electric power may be used, subject to prior written approval of the DEP, if the Contractor can satisfactorily demonstrate that such power generating equipment will meet all the noise requirements herein. Notwithstanding such approval, the Contractor shall continue to meet the noise standards required herein or said approval will be revoked.

(8) After 5:00 p.m. only electrically powered chain saws, powered from an available electric power company, may be used.

(9) The Contractor may have on site emergency back-up electric generators for hoisting workers and supplying illumination and ventilation. Such emergency electric generators may be exercised for up to one-half (1/2) hour between 10:00 a.m. and 3:00 p.m. weekdays (Monday to Friday).

(10)Silencers shall be provided for vent line motors located at or near the surface, and shall be subject to approval by the Engineer.

(11)Welding machines shall not be used in open areas between the hours of 11:00 p.m. and 7:00 a.m. without the written permission of the Engineer. Notwithstanding such approval, the Contractor shall continue to meet the noise standards required herein or said approval will be revoked.

(12)The use of a signal bell or alarms for other than emergency purposes is prohibited, except where necessary to meet OSHA requirements or New York State or Federal Government Labor Laws or Safety Regulations. In no case shall these bells or alarms be unreasonably loud.

(13)All mobile equipment, including loaders, track or wagon drills, etc., shall be properly maintained and shall be equipped with appropriate exhaust mufflers.

(14)Bit grinding may not be done at the construction site without the written permission of the Engineer. Notwithstanding such approval, the Contractor shall continue to meet the noise standards required herein or said approval will be revoked.

(15)Stationary equipment that is a source of noise shall be positioned as far from noise sensitive areas as possible within the confines of the approved construction site area.

(16)Should new abatement techniques be developed and more effective types of noise abatement devices become commercially available during the course of the contract period, such devices or equipment shall be installed by the Contractor if requested by the Commissioner. The Commissioner or the Commissioner's representatives reserves the right to inspect the construction site at any time to review and amend these requirements to cover changes in site operations and new conditions that may be properly imposed to reduce noise levels.

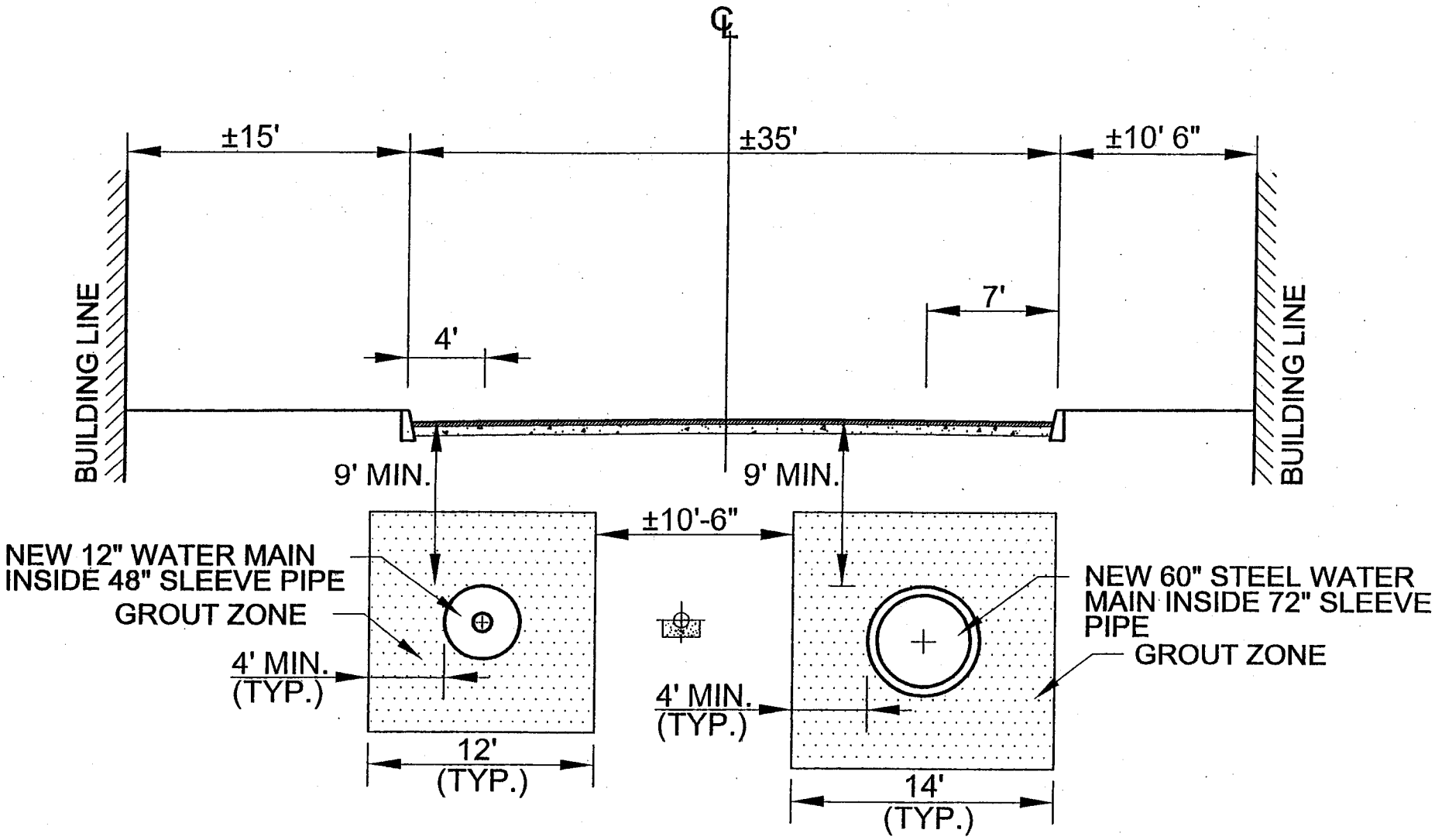
℄
±15'
±35'
±10' 6"
BUILDING LINE
BUILDING LINE
4'
7'
9' MIN.
9' MIN.
±10'-6"
NEW 12" WATER MAIN
INSIDE 48" SLEEVE PIPE
GROUT ZONE
4' MIN.
(TYP.)
12'
(TYP.)
4' MIN.
(TYP.)
NEW 60" STEEL WATER
MAIN INSIDE 72" SLEEVE
PIPE
GROUT ZONE
14'
(TYP.)

SKETCH "A"

ATTACHMENT "1"

NORTHEAST REMSCO
Construction

May 2, 2013

David Burney
New York City
Department of Design & Construction
30-30 Thompson Avenue
Long Island City, NY 11101

Send via Email and Fax

Re: NYC DDC Project QED-1008
54th Street, Queens
Bid Date: May 5, 2013

Dear Mr. Burney:

We request clarification of the bid documents for the referenced project as follows:

1. Bid Items 7.88AA, 76.11CR, 76.21MR and 6.39A are lump sum bid items. The unit price bid item form has a quantity of 0.9 LS for each of these. Please correct the bid form so that quantity correctly reads 1.0 LS.

2. The specified method for installing the jacked 72" and 30" sleeves for the 60" and 12" water mains is by microtunneling. The microtunneling operation requires a minimum of 10,000 SF of equipment lay down area for the generator, slurry separation plant, spoil stockpile, pipe stockpile, lubrication plant and more. Furthermore, the control container must be located immediately over the jacking pit.

   The NYC OCMC traffic stipulations mandate 9AM to 4PM work hours AND require that all travel lanes be restored during non-work hours. 54th Street is a narrow street and the jacking pits are located within the roadway. The OCMC traffic stipulations are inconsistent with the construction reality of a microtunneling operation. The control cabinet alone takes a few days to set up and cannot be moved to open lanes up to traffic. The project cannot be built using microtunneling with these restrictions. 54th Street must be closed to traffic during tunneling with only 1 lane access for local and emergency traffic at all times.

3. American Railway Engineering and Maintenance-of-Way Association (AREMA) manual and every railroad that we have tunneled under require that tunneling operations be carried out 24 hours/day 7 days/week. The OCMC stipulations that you have given us only permit work from 9AM to 4PM, Monday through Friday. The OCMC Permit stipulations must be revised to meet railroad requirements. Please revise or obtain OCMC waiver.

   Based on the bid items provided and the borings there is the expectation that boulders will stop the MTBM. Bid Item 70.52ET is estimated at 48 CY of boulders. Based on the engineers estimated quantity, the MTBM will not be able to break, cut and digest the boulders. Please be aware that a 30" MTBM has very limited cobble or boulder excavating capacity, regardless of MTBM manufacturer.

1433 Highway 34 South
Building B
Farmingdale, NJ 07727
Tel: 732-557-6100
Fax: 732-736-8900
www.northeastremsco.com

AN EQUAL OPPORTUNITY EMPLOYER

JAG COMPANIES

ATTACHMENT "1"

Also, the specification clearly states that boulders negotiated by the MTBM are not payable under the subject bid item since they are not quantifiable. Should boulders prevent a successful drive, what method would be allowed to rescue the MTBM. Is an open cut allowed to remove the boulder or will a jacked casing from the receiving pit back to the MTBM be the solution. Spec section 5.26A, applicable to this item, is silent on methodology.

A more reasonable approach is an open face jacked casing with hand excavation. In order to avoid claims and project delays please closely review and give consideration to this option. Be advised that AREMA permits hand mined jacked casings.

4. The specifications call for welded joint steel pipe for the tunneled casing. Typically, DDC and the BWS has accepted and specified the Permalok steel casing joint in lieu of welded joint. Permalok casings have previously been installed for steel and DIP water mains under the Bronx River and under SIRT tracks. Please modify the spec to allow Permalok joints.

5. The bid items for the 60" steel water main, 60.21SP5T60, 60.22BR5T60 and 60.31S60672 add up to 340 LF of 60" pipe. The plan quantities do not support the bid quantities. Please explain what your intent is or correct the unit bid quantities for consistency with the plans so a fair and balanced bid can be provided.

6. The contract time is 6 months. This is not sufficient based on our experience obtaining approvals from the railroad. Will time extension be given for railroad approval delays?

7. Has a railroad permit been procured to tunnel under their track? If so, please furnish same. The railroad has indicated that it does not issue permits to contractors so the permittee must be NYC DDC. If the permit has not been secured please indicate how long will it take the DDC to obtain permits? The permittee must also pay the costs of railroad inspection and flagmen. Please confirm that the DDC will pay said costs directly to the railroad via force account.

8. In order to obtain quotes for the railroad protective insurance policies we need to know the number of daily train movements, train speeds, number of passenger and freight trains, and whether slow orders will be in effect. The LIRR contacts provided with the bid documents were called to try and get this information. Their response was to get the information from DDC. Please provide this information.

We await your response.

Best Regards
Northeast Remsco Construction, Inc.

Robert Ross, PE
Division Manager

cc: Lorraine Holley - NYC DDC
Gurdip Saini, P.E. - NYC DDC
Eric Macfarlane, P.E. - NYC DDC
Dino Y. P. Ng, P.E. - NYC DDC

ATTACHMENT "2"

SECAC TUNNEL

SECAC Tunnel Co., LLC

VIA USPS CERTIFIED MAIL

May 1, 2013

New York City
Department of Design and Construction
30-30 Thomson Avenue
Long Island City, New York 11101

NYC D.D.C.
2013 MAY -6 PM 1:45

ATTN: Mr. David Burney, Commissioner

RE: Installation of 60-IN & 12-IN Water Mains in 54th St
QED1008
ADDENDUM #5 Issued 4/30/2013
Water Mains in Jacked Steel Casing
70LF of 72" & 66LF of 30" Steel Casing

Mr. Burney;

SECAC Tunnel is a prospective bidder for the referenced project. Our management and personnel have substantial experience constructing projects using Microtunneling techniques including but not limited to the first such installation in 1984. We also have many 10's of thousands of feet of tunneling, jacking and other trenchless experience.

Addendum 5 was issued as a replacement to Section 5.04B of the Standard Water Main Specifications, August 1, 2009. This Addendum 5 has specified the use of Mircotunneling and excluded the use of any other appropriate jacking/trenchless technique on this project.

We firmly believe that the use of Microtunneling is not appropriate for this application and that conventional jacking techniques will provide a better technical and more cost effective solution for the City.

The geology is characterized by potentially raveling soils with numerous "known" cobbles and boulders with relatively shallow cover. We do not expect the specified 72" MTBM to be successful without the added cost of soil stabilization grouting. We are not convinced the specified 30" MTBM will successfully excavate the "known" geology. Failure of either drive will be costly.

The use of Microtunneling will greatly increase the cost of this project. Setup time for the equipment including but not limited to control containers, generators, slurry tanks, slurry separation systems and plumbing, wiring, etc.. will be a direct cost to the City with no added benefit when compared to the same final product achieved by conventional jacking. The insistence of using Microtunneling will further increase costs by effectively reducing the number of bidders on this project.

We respectfully request that your office investigate the appropriateness of this Addendum 5 and provide a final determination which serves the best interests of the NYC DDC and the citizens of New York City.

Thank You,
SECAC Tunnel Co, LLC

Stephen S. Leius
Chief Operating Officer

Cc: JL/SECAC

8229 Fischer Rd. • Baltimore, MD 21222 • 410-477-6655 • 410-477-6657 Fax

ATTACHMENT "3"

NYC D.D.C.

2013 MAY -6 A 8:38

C.A.C. INDUSTRIES, INC.
54-08 Vernon Blvd.
Long Island City, New York 11101
P: 718.729.3600
F: 718.729.0400
(engineering fax)
F: 718.606.6995
(accounting fax)
www.cacindinc.com

Certified mail

Return Receipt Requested

New York City
Department of Design and Construction
30-30 Thomson Avenue
Long Island City, NY 11101

May 1st, 2013

Attn: Eric Macfarlane, P.E.
Deputy Commissioner
Re: QED 1008
Watermains in 54th Avenue, Queens
Subj: Addendum #5, Section 5.0B, Watermains in Jacked Sleeves

Dear Mr. Macfarlane,

C.A.C. Industries, Inc. is in receipt of Addendum #5 for the QED 1008 Project, 54th avenue, Queens, NY. The addendum and changes to the methods of work under section 5.04B1 which will prohibit C.A.C. Industries, Inc. from bidding with a competitive price. The method proposed will cause a huge increase in financial burden to New York City.

C.A.C. proposes to bid the job using conventional jacking methods. The length of the bore is typical and standard for this method of jacking.

Your immediate response to this inquiry is greatly appreciated as it provides us the opportunity to submit a fair, reasonable, and lower cost proposal for installing the work.

Thank you in advance.

Very truly yours,
C.A.C. Industries, Inc.

Michael A. Capasso
President

Cc: D. Ng, P.E., DDC
J. Labozza, P.E., CAC
D Adar, P.E., CAC

P:\Mike\Bids 2013\54th Ave - addendum 5.docx

"An Equal Opportunity Employer"

Cert # 7011 3500 0001 7071 1167

ATTACHMENT "4"

C.A.C. INDUSTRIES, INC.
54-08 Vernon Blvd.
Long Island City, New York 11101
P: 718.729.3600
F: 718.729.0400
(engineering fax)
F: 718.606.6995
(accounting fax)
www.cacindinc.com

May 3, 2013

Department of Design & Construction
30-30 Thomson Avenue
Long Island City, NY 11101

Attn: Eric Macfarlane, P.E.
Deputy Commissioner

Re: NYCDDC Contract No. QED1008
Installation of 60"/12" Water Mains

Gentlemen:

Please provide clarification of the following for the subject bid:

1. Addendum No 5 states that the unit price for water mains in jacked steel sleeves includes the cost of the water main carrier pipe as well as the sleeve. However, unit items for furnishing and installing 12" and 60" mains apparently duplicate the same footages.
2. Item No. 7.88AA includes a quantity of .9, less than 1.
3. Item no. 76.11CR includes a quantity of .9, less than 1.
4. Item No. 76.21MR includes a quantity of .9, less than 1.
5. Item No. 9.04W includes a quantity of .9, less than 1, but extended amount is same as unit price.
6. How can Item No. 6.39A, Mobilization, include a quantity of .9, again less than 1? Based on the bid book, Mobilization would be limited to 3.6% instead of specified 4%.

Very truly yours,

John M. Labozza

John M. Labozza, P.E.
Chief Operations Officer

cc: R. Zetterlund
D. Ng

NEW YORK CITY DEPARTMENT OF
DESIGN + CONSTRUCTION

INFRASTRUCTURE DIVISION
BUREAU OF DESIGN

VOLUME 3 OF 3

PROJECT ID: QED1008

FOR THE INSTALLATION OF 60-INCH AND 12-INCH WATER MAINS IN: 54TH STREET BETWEEN FLUSHING AVENUE AND GRAND AVENUE

Together With All Work Incidental Thereto
BOROUGH OF QUEENS
CITY OF NEW YORK

_____
Contractor

_____

Dated_____, **20**___

_____