Department of Design and Construction

THE CITY OF NEW YORK
DEPARTMENT OF DESIGN AND CONSTRUCTION
DIVISION OF INFRASTRUCTURE

30-30 THOMSON AVENUE
LONG ISLAND CITY, NEW YORK 11101-3045
TELEPHONE (718) 391-1000
WEBSITE www.nyc.gov/buildnyc

LAW

VOLUME 1 OF 3

BID BOOKLET

FOR FURNISHING ALL LABOR AND MATERIALS NECESSARY AND REQUIRED FOR:

PROJECT ID: QED1007

FOR THE CONSTRUCTION OF TRUNK AND DISTRIBUTION WATER MAINS IN ARVERNE BOULEVARD BETWEEN BEACH 59TH STREET AND BEACH 54TH STREET; ROCKAWAY BEACH BOULEVARD BETWEEN BEACH 54TH STREET AND BEACH 49TH STREET; BEACH 67TH STREET BETWEEN ROCKAWAY FREEWAY AND ROCKAWAY BEACH BOULEVARD; ROCKAWAY BEACH BOULEVARD BETWEEN BEACH 54TH STREET AND BEACH 53RD STREET; AND ROCKAWAY BEACH BOULEVARD BETWEEN BEACH 52ND STREET AND BEACH 49TH STREET

INCLUDING STORM AND SANITARY SEWER WORK

Together With All Work Incidental Thereto
BOROUGH OF QUEENS
CITY OF NEW YORK

FOR THE DEPARTMENT OF ENVIRONMENTAL PROTECTION
PREPARED BY
IN-HOUSE DESIGN

June 23, 2015

15-190

Department of Design and Construction

Dr. Feniosky Peña-Mora
Commissioner

Charlette Hamamgian, Esq.
Agency Chief
Contracting Officer

Lorraine Holley
Deputy ACCO
Competitive Sealed
Bid Contracts

April 01, 2016

CERTIFIED MAIL - RETURN RECEIPT REQUEST
C.A.C. INDUSTRIES, INC.
54-08 VERNON BOULEVARD
LONG ISLAND CITY, NY 11101

RE: FMS ID: QED-1007
E-PIN: 85015B0184001
DDC PIN: 8502014WM0013C
CONSTRUCTION OF TRUNK AND DISTRIBUTION WATER MAINS IN ARVENE BLVD BETWEEN BEACH 59TH STREET AND BEACH 54TH STREET/ROCKAWAY BEACH BLVD - BOROUGH OF QUEENS
NOTICE OF AWARD

Dear Contractor:

You are hereby awarded the above referenced contract based upon your bid in the amount of $9,671,062.14 submitted at the bid opening on November 06, 2015. Within ten (10) days of your receipt of this notice of award, you are required to take the actions set forth in Paragraphs (1) through (3) below. For your convenience, attached please find a copy of Schedule A of the General Conditions to the Contract, which sets forth the types and amounts of insurance coverage required for this contract.

(1) Execute four copies of the Agreement in the Contracts Unit, 30-30 Thomson Avenue, 1st Floor, Long Island City, New York (IDCNY Building). A Commissioner of Deeds will be available to witness and notarize your signature. The Agreement must be signed by an officer of the corporation or a partner of the firm.

(2) Submit to the Contracts Unit four properly executed performance and payment bonds. If required for this contract, copies of performance and payment bonds are attached.

(3) Submit to the Contracts Unit the following insurance documentation: (a) original certificate of insurance for general liability in the amount required by Schedule A, and (b) original certificates of insurance or other proof of coverage for workers' compensation and disability benefits, as required by New York State Law. The insurance documentation specified in this paragraph is required for registration of the contract with the Comptroller's Office.

On or before the contract commencement date, you are required to submit all other certificates of insurance and/or policies in the types and amounts required by Schedule A. Such certificates of Insurance and/or policies must be submitted to the Agency Chief Contracting Office, Attention: Risk Manager, Fourth Floor at the above indicated department address.

Your attention is directed to the section of the Information for Bidders entitled "Failure to Execute Contract". As indicated in this section, in the event you fail to execute the contract and furnish the required bonds within the (10) days of your receipt of this notice of award, your bid security will be retained by the City and you will be liable for the difference between your bid price and the price for which the contract is subsequently awarded, less the amount of the bid security retained.

Sincerely,

Lorraine Holley

Lorraine Holley

Bid Tab

Revised Bid Pages:
Revision #1

Description	**CONSTRUCTION OF TRUNK & DISTRIBUTION WATER MAINS IN ARVENE BLVL BETWEEN BEACH 59TH STREET AND BEACH 54TH STREET/ROCKAWAY BEACH BLVD – BOROUGH OF QUEENS**		
Bid Date	**11/6/2015**	**FMS ID**	**QED-1007**
Estimated Cost	**$9,684,103.15**	**Client Agency**	**DEP**
Bid Security	**Not less than 2% of Total Bid Price**	**PLA**	**No**
Time Allowed	**365 CCD**	**Contract Manager**	**Yamina Youb**
Addendum	**5**	**Project Manager**	**Legros, Molene**
PIN	**8502014WM0013C**	**E-PIN**	**85015B0184**
Selective Bidding	**☐Yes ☒No**	**Consultant**	**In-House**

Bid Rank	Vendor	Bid Amount	Security Type
1	C.A.C. INDUSTRIES, INC.	$9,671,062.14	Bond
2	JR CRUZ CORP.	$12,069,069.69	Bond
3	LAWS CONSTRUCTION CORP.	$12,760,000.00	Bond
4	HASA CONSTRUCTION LLC	$14,428,190.00	Bond

Recorder: Brenda Barreiro ext. 1041 **Approver:** Lorraine Holley

SPECIAL NOTICE TO BIDDERS

The New York City Department of Small Business Services (SBS), in conjunction with the New York Business Development Corporation (NYBDC), have established a **NYC Construction Loan** pilot program to provide prime contractors and subcontractors financing for mobilization costs on certain City construction projects.

Under this initiative, loans are available for early stage mobilization needs such as insurance, labor, supplies and equipment. Bidders are strongly encouraged to visit "Growing Your Business" at www.nyc.gov/nycbusiness to learn more about the loan or contact constructionloan@sbs.nyc.gov / (212) 513-6444 to obtain details and to determine preliminary eligibility.

A successful loan applicant will be required to make an assignment of its contract (or subcontract) payments to the lender NYBDC until the loan is repaid. If the loan is to a subcontractor, a prime contractor must honor the terms of such an assignment.

A prime contractor may not discriminate against a subcontractor or potential subcontractor by reason of the subcontractor's participation, or nonparticipation, in the NYC Construction Loan program.

NOTICE TO VENDORS

Please be advised that, pursuant to the authority granted to the City under Labor Law §816-b, the New York City Department of Design and Construction hereby requires that the contractor awarded a contract as a result of this solicitation, and any of its subcontractors with subcontracts worth two million dollars or over, have, prior to entering into such contract or subcontract, apprenticeship agreements appropriate for the type and scope of work to be performed that have been registered with, and approved by, the New York State Commissioner of Labor. In addition, the contractor and its subcontractors will be required to show that such apprenticeship program/s have successfully passed the two year Probation period following the initial registration date of such program/s with the New York State Department of Labor.

The failure to prove, upon request, that these requirements have been met shall result in the contract not being awarded to the contractor or the subcontractor not being approved.

Please be further advised that, pursuant to Labor Law §220, the allowable ratio of apprentices to journeypersons in any craft classification shall not be greater than the ratio permitted to the contractor as to its workforce on any job under the registered apprenticeship program.

(NO TEXT ON THIS PAGE)

CITY OF NEW YORK

DEPARTMENT OF DESIGN AND CONSTRUCTION DIVISION OF INFRASTRUCTURE

BID BOOKLET

FOR FURNISHING ALL LABOR AND MATERIALS NECESSARY AND REQUIRED FOR:

PROJECT ID: QED1007

FOR THE CONSTRUCTION OF TRUNK AND DISTRIBUTION WATER MAINS IN ARVERNE BOULEVARD BETWEEN BEACH 59TH STREET AND BEACH 54TH STREET; ROCKAWAY BEACH BOULEVARD BETWEEN BEACH 54TH STREET AND BEACH 49TH STREET; BEACH 67TH STREET BETWEEN ROCKAWAY FREEWAY AND ROCKAWAY BEACH BOULEVARD; ROCKAWAY BEACH BOULEVARD BETWEEN BEACH 54TH STREET AND BEACH 53RD STREET; AND ROCKAWAY BEACH BOULEVARD BETWEEN BEACH 52ND STREET AND BEACH 49TH STREET

INCLUDING STORM AND SANITARY SEWER WORK

Together With All Work Incidental Thereto
BOROUGH OF QUEENS

(NO TEXT ON THIS PAGE)

PROJECT ID: QED1007

CITY OF NEW YORK
DEPARTMENT OF DESIGN AND CONSTRUCTION
DIVISION OF INFRASTRUCTURE

BID BOOKLET

TABLE OF CONTENTS

SECTION		PAGE
PART A		
1.	Table of Contents	1
2.	Special Notice to Bidders	2
3.	Attachment 1 – Bid Information	A-1
4.	Bid Schedule	B-1
5.	Bid Form	C-1
6.	Affirmation	C-6
7.	Bid Bond	C-7
8.	M/WBE Program: M/WBE Utilization Plan	5
9.	Apprenticeship Program Requirements	19
PART B		
10.	Safety Questionnaire	21
11.	Pre-award Process	24
12.	Project Reference Form	26
13.	Contract Certificate	29
14.	Vendex Compliance	30
15.	Iran Divestment Act Compliance Rider	31
16.	Construction Employment Report	33

(NO TEXT ON THIS PAGE)

CITY OF NEW YORK
DEPARTMENT OF DESIGN AND CONSTRUCTION
DIVISION OF INFRASTRUCTURE

SPECIAL NOTICE TO BIDDERS

BID SUBMISSION REQUIREMENTS

THE FOLLOWING DOCUMENTS ARE TO BE COMPLETED AND SUBMITTED WITH THE BID:

1. Bid Schedule and Bid Form, including Affirmation
2. Bid Security (if required, see Attachment 1 on Page A-1)
3. Schedule B: M/WBE Utilization Plan (if participation goals have been established)

FAILURE TO SUBMIT ITEMS (1), (2) AND (3)
WILL RESULT IN THE DISQUALIFICATION OF THE BID.

4. Safety Questionnaire
5. Construction Employment Report (if bid is $1,000,000 or more)
6. Contract Certificate (if bid is less than $1,000,000)
7. Confirmation of Vendex Compliance
8. Bidder's Certification of Compliance with Iran Divestment Act
9. Special Experience Requirements (if applicable)
10. Apprenticeship Program Questionnaire (if applicable)
11. Any addenda issued prior to the receipt of bids

FAILURE TO SUBMIT ITEMS (4) THROUGH (11)
MAY RESULT IN THE DISQUALIFICATION OF THE BID.

NOTES:

(1) All of the above referred to blank forms to be completed and submitted with the bid are included in the BID BOOKLET.

(2) If the bidder has any questions or requires additional information, please contact the Department of Design and Construction by phone (718-391- 2601) or by fax (718-391-2615).

(3) VENDEX QUESTIONNAIRES: The Bidder is advised that Vendex Questionnaires and procedures have been changed. Vendex Questionnaires, as well as detailed instructions, may be obtained at www.nyc.gov/vendex. The bidder may also obtain Vendex forms and instructions by contacting the Agency Chief Contracting Officer or the contact person for this contract.

(4) SPECIAL EXPERIENCE REQUIREMENTS: The Bidder is advised that Special Experience Requirements may apply to this contract. Such requirements are set forth on pages 3, 3a, 3b, and 4 of this Bid Booklet.

SPECIAL NOTICE TO BIDDERS

SPECIAL EXPERIENCE REQUIREMENTS (Revised 03/2014)

(A) **SPECIAL EXPERIENCE REQUIREMENTS FOR THE BIDDER:** The Special Experience Requirements set forth below apply to the bidder. Compliance with such Special Experience Requirements will be determined solely by the City prior to an award of contract. Failure to comply with the Special Experience Requirements will result in rejection of the bid as non-responsive.

The requirements in this Section (A) apply to this contract where indicated by a blackened box (■).

■ The bidder must, within the last seven (7) consecutive years prior to the bid opening, have successfully completed in a timely fashion at least one (1) project similar in scope and type to the required work. Such prior project may have been performed as a prime contractor, subcontractor or sub-subcontractor.

The Special Experience Requirements next to the blackened box below apply to the bidder. If the bidder intends to perform such work itself, it must demonstrate compliance with the Special Experience Requirements. If the bidder intends to subcontract this work, the proposed subcontractor or sub-subcontractor must demonstrate compliance with the Special Experience Requirements. The contractor, subcontractor or sub-subcontractor (hereinafter referred to as the "entity") that will perform any specific area of work indicated by the blackened box below, may have performed the required prior project(s) as a prime contractor, subcontractor or sub-subcontractor. Once approved, no substitution will be permitted, unless the qualifications of the proposed replacement have been approved in writing in advance by the City.

■ **Trunk Water Main Work:** The entity that will perform the trunk water main work must, within the last seven (7) consecutive years prior to the bid opening, have successfully completed in a timely fashion at least one (1) project similar in scope and type to the required work.

☐ **Best Management Practice Work:** Best Management Practice ("BMP") Work is any item of work in the Bid Schedule that begins with the prefix "BMP". The entity that will perform any BMP Work must, within the last five (5) consecutive years prior to the bid opening, have successfully completed in a timely fashion at least three (3) projects similar in scope and type to the required work.

For professional services in connection with BMP Work, (i.e., monitoring and reporting services), the individual who will perform the required services must, within the last five (5) consecutive years prior to the bid opening, have successfully completed in a timely fashion at least three (3) projects similar in scope and type to the required work. Additional requirements are set forth below.

☐ The individual serving as the Restoration Specialist (Construction Monitor) must be a Registered Landscape Architect licensed by the state of New York, or must have equivalent professional experience.

☐ The individual serving as the Erosion and Sediment Control Licensed/Certified Professional must be a Certified Professional in Erosion and Sediment Control (CPESC), certified by CPESC, Inc.

☐ **Micro-Tunneling/Pipe Jacking Work:** The entity that will perform the micro-tunneling/pipe jacking work must, within the last five (5) consecutive years prior to the bid opening, have successfully completed in a timely fashion at least two (2) projects similar in scope and type to the required work.

☐ **OTHER:** _____

_____

(B) SPECIAL EXPERIENCE REQUIREMENTS FOR SPECIFIC AREAS OF WORK (to be provided after an award of contract):

The requirements in this Section (B) apply to this contract where indicated by a blackened box (■).

The Special Experience Requirements set forth below apply to the contractor, subcontractor or sub-subcontractor that will perform the specific area of work. **Compliance with such Special Experience Requirements will be determined solely by the City after an award of contract.** After an award of contract, when requested by the City, the contractor will be required to submit the qualifications of the contractor, subcontractor or sub-subcontractor that will perform the specific area of work. If the bidder intends to perform such work itself, it must demonstrate compliance with the Special Experience Requirements. If the bidder intends to subcontract this work, the proposed subcontractor or sub-subcontractor must demonstrate compliance with the Special Experience Requirements. Once approved, no substitution will be permitted, unless the qualifications of the proposed replacement have been approved in writing in advance by the City.

Special Experience Requirements apply to the contractor, subcontractor or sub-subcontractor (hereinafter referred to as the "entity") that will perform any specific area of work indicated by a blackened box. The entity may have performed the required prior project(s) as a prime contractor, subcontractor or sub-subcontractor.

☐ **Hazmat Work:** Hazmat Work is any item of work in the Bid Schedule that begins with the prefix 8.01. The entity that will perform any Hazmat Work must, within the last three (3) consecutive years prior to the bid opening, have successfully completed in a timely fashion at least five (5) projects similar in scope and type to the required work.

■ **Pile, CFA Pile, and/or Mini-Pile Work:** The entity that will perform the Pile, CFA Pile and/or Mini-Pile Work must, within the last three (3) consecutive years prior to the bid opening, have successfully completed in a timely fashion at least two (2) projects similar in scope and type to the required work.

For professional services in connection with Pile Work, (i.e., engineering and inspection services), the individual who will perform the required services must be a Professional Engineer licensed by the state of New York. Such individual must also comply with the above requirements for prior projects.

■ **Construction Report, Monitoring And Post-Construction Report, and Continuous Real-Time Monitoring For Vibrations And Movements And Post-Construction Report Work:** The entity that will perform the Construction Report, Monitoring For Vibrations And Movements, and Post-Construction Report Work must, within the last three (3) consecutive years prior to the bid opening, have successfully completed in a timely fashion at least two (2) projects similar in scope and type to the required work.

For professional services in connection with Reporting and Monitoring Work, (i.e., engineering and inspection services), the individual who will perform the required services must be a Professional Engineer licensed by the state of New York. Such individual must also comply with the above requirements for prior projects.

☐ **OTHER:**_____

_____

(C) **SPECIFICATIONS:** In the event of any conflict, omission or inconsistency between (1) the Specifications and/or Contract Drawings, and (2) the Special Experience Requirements in Section (B) of the Special Notice To Bidders, the special experience listed in the Specifications and/or Contract Drawings shall be controlling. The Special Experience Requirements in Section (B) of this Special Notice To Bidders are only for the convenience of the bidders.

(D) **SUBMISSION REQUIREMENTS:** For each project submitted to demonstrate compliance with the Special Experience Requirements, the bidder must complete and submit the Qualification Form included in the Bid Booklet. The City will only evaluate a project if the following criteria are met: (1) the project is described on the Qualification Form, and (2) all information on the Qualification Form is provided. The City will not evaluate any project which does not comply with the criteria set forth herein, including any project which is referred to only on the resume of an individual.

If Special Experience Requirements are indicated for any specific area of work, the submission requirement set forth above shall apply to the entity that will perform the specific area of work.

(E) **CONDITIONS**: In determining compliance with the Special Experience Requirements for the bidder set forth above, the City may consider prior projects completed by principal(s) or other employees of the bidder while affiliated with another entity, subject to the conditions set forth below.

- Any principal or other employee on whose prior experience the bidder is relying to demonstrate compliance with this special experience requirement must have held the following: (a) a significant management role in the prior entity with which he/she was affiliated, and (b) a significant management role in the entity submitting the bid for a period of six (6) months or more from the inception of the bidding entity.

- The bidder may not rely on the experience of its principals or other employees to demonstrate compliance with any other requirements, including without limitation, financial requirements or requirements for a specified minimum amount of annual gross revenues.

(F) **JOINT VENTURES**: In the event the bidder is a joint venture, at least one firm in the joint venture must meet the above described experience requirements.

Qualification Form

List previous projects completed to meet the special experience requirements for this contract. Please photocopy this form for submission of all required projects.

Name of Contractor: CAC INDUSTRIES INC

Name of Project: HUDSON ST

Location of Project: HUDSON ST NYC NY

Owner or Owner's representative (Architect or Engineer) who is familiar with the work performed:

Name: SRINI KESHAVA
Title: EIC Phone Number: 212 442-7283

Brief description of the Project completed or the Project in progress: INSTALLATION OF 1 NUKLWATER MAINS & APPURT IN HUDSON ST FROM CANAL ST TO WORTH ST FOR THE CONSTRUCTION OF SHAFT 29B INCLUDING NYSDOT WORK ON WEST ST

Was the Project performed as a prime, a subcontractor or a sub-subcontractor: PRIME

Amount of Contract, Subcontract or Sub-subcontract: $ 59,484,197.13

Start Date and Completion Date: 8/16/10 - 2/10/16

****

Name of Contractor: CAC INDUSTRIES INC

Name of Project: B94TH ST

Location of Project: FAR ROCKAWAY, N.Y

Owner or Owner's representative (Architect or Engineer) who is familiar with the work performed:

Name: J DAVIS
Title: Deputy Director Phone Number: 718 391-2299

Brief description of the Project completed or the Project in progress: INSTALLATION OF DUCTILE WATER MAINS STORM SANITARY AND WATER MAINS ON B94TH ST

Was the Project performed as a prime, a subcontractor or a sub-subcontractor: PRIME

Amount of Contract, Subcontract or Sub-subcontract: $ 27,000,000

Start Date and Completion Date: 9/19/11 - 9/30/14

Qualification Form

List previous projects completed to meet the special experience requirements for this contract. Please photocopy this form for submission of all required projects.

Name of Contractor: CAC INDUSTRIES INC

Name of Project: THURSBY

Location of Project: FAR ROCKAWAY QUEENS

Owner or Owner's representative (Architect or Engineer) who is familiar with the work performed:

Name: ERNEST FIEORE
Title: EIC Phone Number: 718 945 2190

Brief description of the Project completed or the Project in progress:
SANITARY SEWERS WATERMAIN SIDEWALK & CURBS - NEW ROADWAY

Was the Project performed as a prime, a subcontractor or a sub-subcontractor: PRIME

Amount of Contract, Subcontract or Sub-subcontract: $41 million

Start Date and Completion Date: 1/09 - 5/14

****

Name of Contractor: _____

Name of Project: _____

Location of Project: _____

Owner or Owner's representative (Architect or Engineer) who is familiar with the work performed:

Name: _____
Title: _____ Phone Number: _____

Brief description of the Project completed or the Project in progress: _____

Was the Project performed as a prime, a subcontractor or a sub-subcontractor: _____

Amount of Contract, Subcontract or Sub-subcontract: _____

Start Date and Completion Date: _____

(NO TEXT ON THIS PAGE)

ATTACHMENT 1 - BID INFORMATION

PROJECT ID: QED1007
PIN: 8502014WM0013C

Description and Location of Work: For The Construction Of Trunk And Distribution Water Mains In Arverne Boulevard Between Beach 59th Street And Beach 54th Street; Rockaway Beach Boulevard Between Beach 54th Street And Beach 49th Street; Beach 67th Street Between Rockaway Freeway And Rockaway Beach Boulevard; Rockaway Beach Boulevard Between Beach 54th Street And Beach 53rd Street; And Rockaway Beach Boulevard Between Beach 52nd Street And Beach 49th Street Including Storm And Sanitary Sewer Work, Together With All Work Incidental Thereto, Borough Of Queens.

Documents Available At:
30-30 Thomson Avenue
First Floor Bid Procurement Room
Long Island City, New York 11101
8:30 A.M. to 4:00 P.M. - Monday through Friday

Submission of Bids To:
30-30 Thomson Avenue
First Floor Bid Procurement Room
Long Island City, New York 11101
Before 11:00 A.M. on October 20, 2015

Bid Opening:
30-30 Thomson Avenue
First Floor Bid Procurement Room
Long Island City, New York 11101

Time and Date: 11:00 A.M. on October 20, 2015

Pre-Bid Conference: Yes _____ No X

If Yes, Mandatory: _____ Optional: _____
Time and Date: _____
Location: _____

Bid Security: Bid Security is required in the amount set forth below; provided, however, bid security is not required if the TOTAL BID PRICE set forth on the Bid Form is less than $1,000,000.00.

(1) Bond in an amount not less than 10% of the TOTAL BID PRICE set forth on the Bid Form, OR
(2) Certified Check in an amount not less than 2% of the TOTAL BID PRICE set forth on the Bid Form.

Performance and Payment Security: Required for contracts in the amount of $1,000,000 or more. Performance Security and Payment Security shall each be in an amount equal to 100% of the Contract Price.

Agency Contact Person: Lorraine Holley
Phone: 718-391-2601 FAX: 718-391-2615

(NO TEXT ON THIS PAGE)

BID SCHEDULE

NOTICE TO BIDDERS

Items listed in this Bid Schedule which have one (1) digit followed by a decimal (e.g. 4.02 AG), excluding items beginning with the number "8.01", shall comply with the requirements of the corresponding numerical Sections of the NYCDOT Standard Highway Specifications as amended by Addendum No. 1 and Addendum No. 2, herein Volume 3 of 3.

Items listed in this Bid Schedule which have two (2) digits beginning with the number "5" followed by a decimal (e.g. 50.31CC15) shall comply with the requirements of the New York City Department of Environmental Protection (NYCDEP) Standard Sewer and Water Main Specifications dated July 1, 2014, as amended by Addendum No. 2, herein Volume 3 of 3.

Items listed in this Bid Schedule which have two (2) digits beginning with the number "6" followed by a decimal (e.g. 60.11R612) shall comply with the requirements of the New York City Department of Environmental Protection (NYCDEP) Standard Sewer and Water Main Specifications dated July 1, 2014, as amended by Addendum No. 2, herein Volume 3 of 3.

Items listed in this Bid Schedule which have two (2) digits beginning with the number "7" followed by a decimal (e.g. 70.31FN) shall comply with the requirements of the New York City Department of Environmental Protection (NYCDEP) Standard Sewer and Water Main Specifications dated July 1, 2014, as amended by Addendum No. 2, herein Volume 3 of 3.

Items listed in this Bid Schedule beginning with the prefix "UTL-" (e.g. UTL-6.01.8) are for Gas Cost Sharing (EP-7) work and shall comply with the requirements of Addendum No. 3, herein Volume 3 of 3.

(NO TEXT ON THIS PAGE)

BID SCHEDULE

NOTE: (1) The Agency may reject a bid if it contains unbalanced bid prices. An unbalanced bid is considered to be one containing lump sum or unit items which do not reflect reasonable actual costs plus a reasonable proportionate share of the Bidder's anticipated profit, overhead costs, and other indirect costs, anticipated for the performance of the items in question.

(2) The following bid prices on Unit Price Contracts are to be paid for the actual quantities of the item numbers in the completed work or structure, and they cover the cost of all work, labor, material, tools, plant and appliances of every description necessary to complete the entire work, as specified, and the removal of all debris, temporary work and appliances.

(3) PLEASE BE SURE A LEGIBLE BID IS ENTERED, IN INK, FOR EACH ITEM.
Alterations must be initialed in ink by the bidder.

(4) The Extended Amount entered in Column 6 shall be the product of the Estimated Quantity in Column 3 times the Unit Price Bid in Column 5.

(5) Prospective bidders must examine the Bid Schedule carefully and, before bidding, must advise the Commissioner, in writing, if any pages are missing, and must request that such missing pages be furnished them. The pages of this Bid Schedule are numbered consecutively, as follows:
B - 3 [REVISION # 1] Through B - 28 [REVISION # 1]

PLEASE BE SURE A LEGIBLE BID IS ENTERED FOR EACH ITEM.
THE BIDDER SHALL INSERT THE TOTAL BID PRICE IN
THE BID FORM ON PAGE C-4 OF THIS BID BOOKLET.

NEW YORK CITY DEPARTMENT OF DESIGN AND CONSTRUCTION
DIVISION OF INFRASTRUCTURE - BUREAU OF DESIGN

PROJECT ID: QED1007
CONTRACT PIN: 8502014WM0013C

BID SCHEDULE FORM

COL. 1 SEQ. NO	COL. 2 ITEM NUMBER and DESCRIPTION	COL. 3 ENGINEER'S ESTIMATE OF QUANTITIY	COL. 4 UNIT	COL. 5 UNIT PRICE (IN FIGURES) DOLLARS	CTS	COL. 6 EXTENDED AMOUNT (IN FIGURES) DOLLARS	CTS
001	**4.02 AF-R** ASPHALTIC CONCRETE WEARING COURSE, 2" THICK	9,800.00	S.Y.	15	00	147,000	00
002	**4.02 AG** ASPHALTIC CONCRETE WEARING COURSE, 3" THICK	750.00	S.Y.	30	00	22,500	00
003	**4.02 CA** BINDER MIXTURE	2,265.00	TONS	180	00	407,700	00
004	**4.04 AC** CONCRETE BASE FOR PAVEMENT, 6" THICK, CLASS B-32	125.00	C.Y.	275	00	34,375	00
005	**4.04 H** CONCRETE BASE FOR PAVEMENT, VARIABLE THICKNESS FOR TRENCH RESTORATION, (HIGH-EARLY STRENGTH)	30.00	C.Y.	350	00	10,500	00
006	**4.08 AA** CONCRETE CURB (18" DEEP)	150.00	L.F.	60	00	9,000	00

NEW YORK CITY DEPARTMENT OF DESIGN AND CONSTRUCTION
DIVISION OF INFRASTRUCTURE - BUREAU OF DESIGN

PROJECT ID: QED1007
CONTRACT PIN: 8502014WM0013C

BID SCHEDULE FORM

COL. 1 SEQ. NO	COL. 2 ITEM NUMBER and DESCRIPTION	COL. 3 ENGINEER'S ESTIMATE OF QUANTITIY	COL. 4 UNIT	COL. 5 UNIT PRICE (IN FIGURES) DOLLARS	CTS	COL. 6 EXTENDED AMOUNT (IN FIGURES) DOLLARS	CTS
007	4.09 AD STRAIGHT STEEL FACED CONCRETE CURB (18" DEEP)	360.00	L.F.	85	00	30,600	00
008	4.09 CD CORNER STEEL FACED CONCRETE CURB (18" DEEP)	240.00	L.F.	125	00	30,000	00
009	4.13 AAS 4" CONCRETE SIDEWALK (UNPIGMENTED)	1,680.00	S.F.	12	00	20,160	00
010	4.13 BAS 7" CONCRETE SIDEWALK (UNPIGMENTED)	1,350.00	S.F.	16	00	21,600	00
011	4.13 DE EMBEDDED PREFORMED DETECTABLE WARNING UNITS	192.00	S.F.	15	00	2,880	00
012	4.18 A MAINTENANCE TREE PRUNING (UNDER 12" CAL.)	51.00	EACH	340	00	17,340	00

NEW YORK CITY DEPARTMENT OF DESIGN AND CONSTRUCTION
DIVISION OF INFRASTRUCTURE - BUREAU OF DESIGN

PROJECT ID: QED1007
CONTRACT PIN: 8502014WM0013C

BID SCHEDULE FORM

COL. 1 SEQ. NO	COL. 2 ITEM NUMBER and DESCRIPTION	COL. 3 ENGINEER'S ESTIMATE OF QUANTITIY	COL. 4 UNIT	COL. 5 UNIT PRICE (IN FIGURES) DOLLARS	CTS	COL. 6 EXTENDED AMOUNT (IN FIGURES) DOLLARS	CTS
013	**4.18 B** MAINTENANCE TREE PRUNING (12" TO UNDER 18" CAL.)	14.00	EACH	450	00	6,300	00
014	**4.18 C** MAINTENANCE TREE PRUNING (18" TO UNDER 24" CAL.)	5.00	EACH	600	00	3,000	00
015	**4.21** TREE CONSULTANT	140.00	P/HR	75	00	10,500	00
016	**50.21M3E024D** 24" R.C.P. CLASS III STORM SEWER, ENCASED IN CONCRETE	30.00	L.F.	850	00	25,500	00
017	**50.31ME12** 12" E.S.V.P. STORM SEWER, ENCASED IN CONCRETE	30.00	L.F.	750	00	22,500	00
018	**50.31SC10** 10" E.S.V.P. SANITARY SEWER, ON CONCRETE CRADLE	170.00	L.F.	700	00	119,000	00

NEW YORK CITY DEPARTMENT OF DESIGN AND CONSTRUCTION
DIVISION OF INFRASTRUCTURE - BUREAU OF DESIGN

PROJECT ID: QED1007
CONTRACT PIN: 8502014WM0013C

BID SCHEDULE FORM

COL. 1 SEQ. NO	COL. 2 ITEM NUMBER and DESCRIPTION	COL. 3 ENGINEER'S ESTIMATE OF QUANTITIY	COL. 4 UNIT	COL. 5 UNIT PRICE (IN FIGURES) DOLLARS	CTS	COL. 6 EXTENDED AMOUNT (IN FIGURES) DOLLARS	CTS
019	**50.31SE12** 12" E.S.V.P. SANITARY SEWER, ENCASED IN CONCRETE	30.00	L.F.	680	00	20,400	00
020	**50.41M6E12** 12" D.I.P. CLASS 56 STORM SEWER, ENCASED IN CONCRETE	30.00	L.F.	860	00	25,800	00
021	**50.41M6E20** 20" D.I.P. CLASS 56 STORM SEWER, ENCASED IN CONCRETE	265.00	L.F.	675	00	178,875	00
022	**51.11C000** CHAMBER	1.00	EACH	35,000	00	35,000	00
023	**51.21S0A3000V** STANDARD SHALLOW MANHOLE TYPE A-3	3.00	EACH	5,000	00	15,000	00
024	**51.21S0B1000V** STANDARD MANHOLE TYPE B-1	4.00	EACH	10,000	00	40,000	00

NEW YORK CITY DEPARTMENT OF DESIGN AND CONSTRUCTION
DIVISION OF INFRASTRUCTURE - BUREAU OF DESIGN

PROJECT ID: QED1007
CONTRACT PIN: 8502014WM0013C

BID SCHEDULE FORM

COL. 1 SEQ. NO	COL. 2 ITEM NUMBER and DESCRIPTION	COL. 3 ENGINEER'S ESTIMATE OF QUANTITIY	COL. 4 UNIT	COL. 5 UNIT PRICE (IN FIGURES) DOLLARS	CTS	COL. 6 EXTENDED AMOUNT (IN FIGURES) DOLLARS	CTS
025	51.21W000000V SPECIAL SHALLOW MANHOLE	1.00	EACH	25,000	00	25,000	00
026	51.23RF REPLACEMENT OF EXISTING MANHOLE FRAME AND COVER	13.00	EACH	1,000	00	13,000	00
027	51.41S001 STANDARD CATCH BASIN, TYPE 1	21.00	EACH	15,000	00	315,000	00
028	52.11D12 12" DUCTILE IRON PIPE BASIN CONNECTION	540.00	L.F.	125	00	67,500	00
029	52.21V08 8" E.S.V.P. RISER FOR HOUSE CONNECTION	10.00	V.F.	95	00	950	00
030	52.31V06S10 6" E.S.V.P. SPUR FOR HOUSE CONNECTION ON 10" E.S.V.P. SANITARY SEWER	2.00	EACH	250	00	500	00

NEW YORK CITY DEPARTMENT OF DESIGN AND CONSTRUCTION
DIVISION OF INFRASTRUCTURE - BUREAU OF DESIGN

PROJECT ID: QED1007
CONTRACT PIN: 8502014WM0013C

BID SCHEDULE FORM

COL. 1 SEQ. NO	COL. 2 ITEM NUMBER and DESCRIPTION	COL. 3 ENGINEER'S ESTIMATE OF QUANTITIY	COL. 4 UNIT	COL. 5 UNIT PRICE (IN FIGURES) DOLLARS	CTS	COL. 6 EXTENDED AMOUNT (IN FIGURES) DOLLARS	CTS
031	**52.31V06S12** 6" E.S.V.P. SPUR FOR HOUSE CONNECTION ON 12" E.S.V.P. SANITARY SEWER	4.00	EACH	325	00	1,300	00
032	**52.41V06R** 6" E.S.V.P. HOUSE CONNECTION DRAIN ON CONCRETE CRADLE (RECONNECTION)	36.00	L.F.	75	00	2,700	00
033	**53.11DR** TELEVISION INSPECTION AND DIGITAL AUDIO-VISUAL RECORDING OF SEWERS	985.00	L.F.	5	00	4,925	00
034	**6.02 AAN** UNCLASSIFIED EXCAVATION	1,565.00	C.Y.	25	00	39,125	00
035	**6.02 XHEC** INCREMENTAL COST FOR MODIFYING WORK METHODS NEAR (WITHIN 3 FEET OF) TRANSIT FACILITIES AND BUILDING VAULTS	25.00	C.Y.	150	00	3,750	00
036	**6.02 XSCW** INCREMENTAL COST FOR USING SPECIAL CARE WORK METHODS NEAR (FROM 3 FEET TO 50 FEET) TRANSIT FACILITIES	25.00	C.Y.	100	00	2,500	00

NEW YORK CITY DEPARTMENT OF DESIGN AND CONSTRUCTION
DIVISION OF INFRASTRUCTURE - BUREAU OF DESIGN

PROJECT ID: QED1007
CONTRACT PIN: 8502014WM0013C

BID SCHEDULE FORM

COL. 1	COL. 2	COL. 3	COL. 4	COL. 5 UNIT PRICE (IN FIGURES)		COL. 6 EXTENDED AMOUNT (IN FIGURES)	
SEQ. NO	ITEM NUMBER and DESCRIPTION	ENGINEER'S ESTIMATE OF QUANTITIY	UNIT	DOLLARS	CTS	DOLLARS	CTS
037	6.25 RS TEMPORARY SIGNS	2,150.00	S.F.	1	00	2,150	00
038	6.26 TIMBER CURB	8,610.00	L.F.		01	86	10
039	6.28 AA LIGHTED TIMBER BARRICADES	2,250.00	L.F.		01	22	50
040	6.40 C ENGINEER'S FIELD OFFICE (TYPE C)	18.00	MONTH	5,500	00	99,000	00
041	6.44 THERMOPLASTIC REFLECTORIZED PAVEMENT MARKINGS (4" WIDE)	16,600.00	L.F.	1	00	16,600	00
042	6.49 TEMPORARY PAVEMENT MARKINGS (4" WIDE)	4,200.00	L.F.		50	2,100	00

NEW YORK CITY DEPARTMENT OF DESIGN AND CONSTRUCTION
DIVISION OF INFRASTRUCTURE - BUREAU OF DESIGN

PROJECT ID: QED1007
CONTRACT PIN: 8502014WM0013C

BID SCHEDULE FORM

COL. 1	COL. 2	COL. 3	COL. 4	COL. 5 UNIT PRICE (IN FIGURES)		COL. 6 EXTENDED AMOUNT (IN FIGURES)	
SEQ. NO	ITEM NUMBER and DESCRIPTION	ENGINEER'S ESTIMATE OF QUANTITIY	UNIT	DOLLARS	CTS	DOLLARS	CTS
043	6.50 CLEANING OF DRAINAGE STRUCTURES	4.00	EACH	500	00	2,000	00
044	6.52 CG CROSSING GUARD	875.00	P/HR	75	00	65,625	00
045	6.53 REMOVE EXISTING LANE MARKINGS (4" WIDE)	4,200.00	L.F.	1	00	4,200	00
046	6.87 PLASTIC BARRELS	2,180.00	EACH	1	00	2,180	00
047	60.11R520 FURNISHING AND DELIVERING 20-INCH DUCTILE IRON RESTRAINED JOINT PIPE (CLASS 55)	40.00	L.F.	200	00	8,000	00
048	60.11R536 FURNISHING AND DELIVERING 36-INCH DUCTILE IRON RESTRAINED JOINT PIPE (CLASS 55)	10.00	L.F.	1,500	00	15,000	00

NEW YORK CITY DEPARTMENT OF DESIGN AND CONSTRUCTION
DIVISION OF INFRASTRUCTURE - BUREAU OF DESIGN

PROJECT ID: QED1007
CONTRACT PIN: 8502014WM0013C

BID SCHEDULE FORM

COL. 1	COL. 2	COL. 3	COL. 4	COL. 5 UNIT PRICE (IN FIGURES)		COL. 6 EXTENDED AMOUNT (IN FIGURES)	
SEQ. NO	ITEM NUMBER and DESCRIPTION	ENGINEER'S ESTIMATE OF QUANTITIY	UNIT	DOLLARS	CTS	DOLLARS	CTS
049	**60.11R606** FURNISHING AND DELIVERING 6-INCH DUCTILE IRON RESTRAINED JOINT PIPE (CLASS 56)	250.00	L.F.	31	00	7,750	00
050	**60.11R608** FURNISHING AND DELIVERING 8-INCH DUCTILE IRON RESTRAINED JOINT PIPE (CLASS 56)	160.00	L.F.	45	00	7,200	00
051	**60.11R612** FURNISHING AND DELIVERING 12-INCH DUCTILE IRON RESTRAINED JOINT PIPE (CLASS 56)	3,355.00	L.F.	80	00	268,400	00
052	**60.12D06** LAYING 6-INCH DUCTILE IRON PIPE AND FITTINGS	295.00	L.F.	25	00	7,375	00
053	**60.12D08** LAYING 8-INCH DUCTILE IRON PIPE AND FITTINGS	175.00	L.F.	70	00	12,250	00
054	**60.12D12** LAYING 12-INCH DUCTILE IRON PIPE AND FITTINGS	3,580.00	L.F.	80	00	286,400	00

NEW YORK CITY DEPARTMENT OF DESIGN AND CONSTRUCTION
DIVISION OF INFRASTRUCTURE - BUREAU OF DESIGN

PROJECT ID: QED1007
CONTRACT PIN: 8502014WM0013C

BID SCHEDULE FORM

COL. 1 SEQ. NO	COL. 2 ITEM NUMBER and DESCRIPTION	COL. 3 ENGINEER'S ESTIMATE OF QUANTITIY	COL. 4 UNIT	COL. 5 UNIT PRICE (IN FIGURES) DOLLARS	CTS	COL. 6 EXTENDED AMOUNT (IN FIGURES) DOLLARS	CTS
055	60.12D20 LAYING 20-INCH DUCTILE IRON PIPE AND FITTINGS	50.00	L.F.	200	00	10,000	00
056	60.12D36 LAYING 36-INCH DUCTILE IRON PIPE AND FITTINGS	15.00	L.F.	550	00	8,250	00
057	60.13M0A24 FURNISHING AND DELIVERING DUCTILE IRON MECHANICAL JOINT 24 -INCH DIAMETER AND SMALLER FITTINGS, INCLUDING WEDGE TYPE RETAINER GLANDS	13.00	TONS	7,500	00	97,500	00
058	60.13M5S36 FURNISHING AND DELIVERING 36-INCH DUCTILE IRON MECHANICAL JOINT SLEEVES (CLASS 55)	1.00	EACH	74,000	00	74,000	00
059	60.18BJC20EL FURNISHING, DELIVERING AND INSTALLING BELL JOINT CLAMPS, COMPLETE FOR 20-INCH PIPE AND LESS	14.00	EACH	1	00	14	00
060	60.21SP3T30 FURNISHING, DELIVERING AND LAYING 30-INCH STRAIGHT STEEL PIPE, 3/8-INCH WALL THICKNESS	35.00	L.F.	1,100	00	38,500	00

NEW YORK CITY DEPARTMENT OF DESIGN AND CONSTRUCTION
DIVISION OF INFRASTRUCTURE - BUREAU OF DESIGN

PROJECT ID: QED1007
CONTRACT PIN: 8502014WM0013C

BID SCHEDULE FORM

COL. 1	COL. 2	COL. 3	COL. 4	COL. 5 UNIT PRICE (IN FIGURES)		COL. 6 EXTENDED AMOUNT (IN FIGURES)	
SEQ. NO	ITEM NUMBER and DESCRIPTION	ENGINEER'S ESTIMATE OF QUANTITIY	UNIT	DOLLARS	CTS	DOLLARS	CTS
061	**60.21SP3T36** FURNISHING, DELIVERING AND LAYING 36-INCH STRAIGHT STEEL PIPE, 3/8-INCH WALL THICKNESS	2,875.00	L.F.	900	00	2,587,500	00
062	**60.22BR3T30** FURNISHING, DELIVERING AND LAYING 30-INCH STEEL BENDS AND REDUCERS, 3/8-INCH WALL THICKNESS	20.00	L.F.	3,000	00	60,000	00
063	**60.22BR3T36** FURNISHING, DELIVERING AND LAYING 36-INCH STEEL BENDS AND REDUCERS, 3/8-INCH WALL THICKNESS	125.00	L.F.	3,100	00	387,500	00
064	**60.25PSO** FURNISHING, DELIVERING AND INSTALLING PLATE STEEL OUTLETS ON STEEL PIPE, ACCESS MANHOLE OUTLETS WITH COVERS, AND NUTS AND BOLTS COMPLETE	7,000.00	LBS.	25	00	175,000	00
065	**60.29CP** FURNISHING, INSTALLING AND TESTING CORROSION CONTROL AND/OR CATHODIC PROTECTION SYSTEM	1.00	L.S.	150,000	00	150,000	00

NEW YORK CITY DEPARTMENT OF DESIGN AND CONSTRUCTION
DIVISION OF INFRASTRUCTURE - BUREAU OF DESIGN

PROJECT ID: QED1007
CONTRACT PIN: 8502014WM0013C

BID SCHEDULE FORM

COL. 1	COL. 2	COL. 3	COL. 4	COL. 5 UNIT PRICE (IN FIGURES)		COL. 6 EXTENDED AMOUNT (IN FIGURES)	
SEQ. NO	ITEM NUMBER and DESCRIPTION	ENGINEER'S ESTIMATE OF QUANTITIY	UNIT	DOLLARS	CTS	DOLLARS	CTS
066	**61.11DFM06** FURNISHING AND DELIVERING 6-INCH FLANGED-MECHANICAL JOINT DUCTILE IRON GATE VALVE COMPLETE WITH WEDGE TYPE RETAINER GLAND	4.00	EACH	10,000	00	40,000	00
067	**61.11DFM12** FURNISHING AND DELIVERING 12-INCH FLANGED-MECHANICAL JOINT DUCTILE IRON GATE VALVE COMPLETE WITH WEDGE TYPE RETAINER GLAND	3.00	EACH	15,000	00	45,000	00
068	**61.11DMM06** FURNISHING AND DELIVERING 6-INCH MECHANICAL JOINT DUCTILE IRON GATE VALVE COMPLETE WITH WEDGE TYPE RETAINER GLANDS	13.00	EACH	2,500	00	32,500	00
069	**61.11DMM08** FURNISHING AND DELIVERING 8-INCH MECHANICAL JOINT DUCTILE IRON GATE VALVE COMPLETE WITH WEDGE TYPE RETAINER GLANDS	1.00	EACH	6,000	00	6,000	00
070	**61.11DMM12** FURNISHING AND DELIVERING 12-INCH MECHANICAL JOINT DUCTILE IRON GATE VALVE COMPLETE WITH WEDGE TYPE RETAINER GLANDS	16.00	EACH	12,000	00	192,000	00

NEW YORK CITY DEPARTMENT OF DESIGN AND CONSTRUCTION
DIVISION OF INFRASTRUCTURE - BUREAU OF DESIGN

PROJECT ID: QED1007
CONTRACT PIN: 8502014WM0013C

BID SCHEDULE FORM

COL. 1 SEQ. NO	COL. 2 ITEM NUMBER and DESCRIPTION	COL. 3 ENGINEER'S ESTIMATE OF QUANTITIY	COL. 4 UNIT	COL. 5 UNIT PRICE (IN FIGURES) DOLLARS	CTS	COL. 6 EXTENDED AMOUNT (IN FIGURES) DOLLARS	CTS
071	**61.11DMM20** FURNISHING AND DELIVERING 20-INCH MECHANICAL JOINT DUCTILE IRON GATE VALVE COMPLETE WITH WEDGE TYPE RETAINER GLANDS	1.00	EACH	25,000	00	25,000	00
072	**61.11TWC03** FURNISHING AND DELIVERING 3-INCH WET CONNECTION TAPPING VALVE COMPLETE WITH WEDGE TYPE RETAINER GLANDS	3.00	EACH	800	00	2,400	00
073	**61.11TWC04** FURNISHING AND DELIVERING 4-INCH WET CONNECTION TAPPING VALVE COMPLETE WITH WEDGE TYPE RETAINER GLANDS	3.00	EACH	900	00	2,700	00
074	**61.11TWC06** FURNISHING AND DELIVERING 6-INCH WET CONNECTION TAPPING VALVE COMPLETE WITH WEDGE TYPE RETAINER GLANDS	4.00	EACH	1,050	00	4,200	00
075	**61.12DFM06** SETTING 6-INCH FLANGED-MECHANICAL JOINT DUCTILE IRON GATE VALVE COMPLETE WITH WEDGE TYPE RETAINER GLAND	4.00	EACH	20,000	00	80,000	00
076	**61.12DFM12** SETTING 12-INCH FLANGED-MECHANICAL JOINT DUCTILE IRON GATE VALVE COMPLETE WITH WEDGE TYPE RETAINER GLAND	3.00	EACH	25,000	00	75,000	00

NEW YORK CITY DEPARTMENT OF DESIGN AND CONSTRUCTION
DIVISION OF INFRASTRUCTURE - BUREAU OF DESIGN

PROJECT ID: QED1007
CONTRACT PIN: 8502014WM0013C

BID SCHEDULE FORM

COL. 1	COL. 2	COL. 3	COL. 4	COL. 5 UNIT PRICE (IN FIGURES)		COL. 6 EXTENDED AMOUNT (IN FIGURES)	
SEQ. NO	ITEM NUMBER and DESCRIPTION	ENGINEER'S ESTIMATE OF QUANTITIY	UNIT	DOLLARS	CTS	DOLLARS	CTS
077	**61.12DMM06** SETTING 6-INCH MECHANICAL JOINT DUCTILE IRON GATE VALVE COMPLETE WITH WEDGE TYPE RETAINER GLANDS	13.00	EACH	1,000	00	13,000	00
078	**61.12DMM08** SETTING 8-INCH MECHANICAL JOINT DUCTILE IRON GATE VALVE COMPLETE WITH WEDGE TYPE RETAINER GLANDS	1.00	EACH	1,500	00	1,500	00
079	**61.12DMM12** SETTING 12-INCH MECHANICAL JOINT DUCTILE IRON GATE VALVE COMPLETE WITH WEDGE TYPE RETAINER GLANDS	16.00	EACH	2,500	00	40,000	00
080	**61.12DMM20** SETTING 20-INCH MECHANICAL JOINT DUCTILE IRON GATE VALVE COMPLETE WITH WEDGE TYPE RETAINER GLANDS	1.00	EACH	3,000	00	3,000	00
081	**61.12TWC03** SETTING 3-INCH WET CONNECTION TAPPING VALVE COMPLETE WITH WEDGE TYPE RETAINER GLANDS	3.00	EACH	200	00	600	00
082	**61.12TWC04** SETTING 4-INCH WET CONNECTION TAPPING VALVE COMPLETE WITH WEDGE TYPE RETAINER GLANDS	3.00	EACH	200	00	600	00

NEW YORK CITY DEPARTMENT OF DESIGN AND CONSTRUCTION
DIVISION OF INFRASTRUCTURE - BUREAU OF DESIGN

PROJECT ID: QED1007
CONTRACT PIN: 8502014WM0013C

BID SCHEDULE FORM

COL. 1 SEQ. NO	COL. 2 ITEM NUMBER and DESCRIPTION	COL. 3 ENGINEER'S ESTIMATE OF QUANTITIY	COL. 4 UNIT	COL. 5 UNIT PRICE (IN FIGURES) DOLLARS	CTS	COL. 6 EXTENDED AMOUNT (IN FIGURES) DOLLARS	CTS
083	**61.12TWC06** SETTING 6-INCH WET CONNECTION TAPPING VALVE COMPLETE WITH WEDGE TYPE RETAINER GLANDS	4.00	EACH	200	00	800	00
084	**61.21BVB36** FURNISHING, DELIVERING AND INSTALLING 36-INCH BUTTERFLY VALVE WITH BY-PASS ARRANGEMENT AND OUTLET, COMPLETE	1.00	EACH	450,000	00	450,000	00
085	**61.21EJB36** FURNISHING, DELIVERING AND INSTALLING 36-INCH EXPANSION JOINT FOR BUTTERFLY VALVE INCLUDING 6-INCH BY-PASS OUTLET	1.00	EACH	150,000	00	150,000	00
086	**61.31PV12** FURNISHING, DELIVERING AND INSTALLING 12-INCH PRESSURE REGULATOR VALVE	1.00	EACH	160,000	00	160,000	00
087	**62.11SD** FURNISHING AND DELIVERING HYDRANTS	16.00	EACH	10,000	00	160,000	00
088	**62.12SG** SETTING HYDRANTS COMPLETE WITH WEDGE TYPE RETAINER GLANDS	16.00	EACH	5,000	00	80,000	00

NEW YORK CITY DEPARTMENT OF DESIGN AND CONSTRUCTION
DIVISION OF INFRASTRUCTURE - BUREAU OF DESIGN

PROJECT ID: QED1007
CONTRACT PIN: 8502014WM0013C

BID SCHEDULE FORM

COL. 1 SEQ. NO	COL. 2 ITEM NUMBER and DESCRIPTION	COL. 3 ENGINEER'S ESTIMATE OF QUANTITIY	COL. 4 UNIT	COL. 5 UNIT PRICE (IN FIGURES) DOLLARS	CTS	COL. 6 EXTENDED AMOUNT (IN FIGURES) DOLLARS	CTS
089	**62.13RH** REMOVING HYDRANTS	10.00	EACH	1,000	00	10,000	00
090	**62.14FS** FURNISHING, DELIVERING AND INSTALLING HYDRANT FENDERS	36.00	EACH	250	00	9,000	00
091	**63.11MH** FURNISHING, DELIVERING AND INSTALLING 36-INCH CAST IRON MANHOLE HEADS AND COVERS	7.00	TONS	1,500	00	10,500	00
092	**63.11MS** FURNISHING, DELIVERING AND INSTALLING MANHOLE STEPS TYPE PS2-PF	94.00	EACH	50	00	4,700	00
093	**63.11VC** FURNISHING AND DELIVERING VARIOUS CASTINGS	17.00	TONS	1,500	00	25,500	00
094	**64.11EL** WITHDRAWING AND REPLACING HOUSE SERVICES USING 1-1/2-INCH OR LARGER SCREW TAPS	2.00	EACH	850	00	1,700	00

NEW YORK CITY DEPARTMENT OF DESIGN AND CONSTRUCTION
DIVISION OF INFRASTRUCTURE - BUREAU OF DESIGN

PROJECT ID: QED1007
CONTRACT PIN: 8502014WM0013C

BID SCHEDULE FORM

COL. 1 SEQ. NO	COL. 2 ITEM NUMBER and DESCRIPTION	COL. 3 ENGINEER'S ESTIMATE OF QUANTITIY	COL. 4 UNIT	COL. 5 UNIT PRICE (IN FIGURES) DOLLARS	CTS	COL. 6 EXTENDED AMOUNT (IN FIGURES) DOLLARS	CTS
095	**64.11ST** WITHDRAWING AND REPLACING HOUSE SERVICES USING SMALLER THAN 1-1/2-INCH SCREW TAPS	12.00	EACH	560	00	6,720	00
096	**64.12COEG** CUTTING AND OFFSETTING HOUSE SERVICE WATER CONNECTIONS (EQUAL TO OR GREATER THAN 3-INCH DIAMETER)	10.00	L.F.	120	00	1,200	00
097	**64.12COLT** CUTTING AND OFFSETTING HOUSE SERVICE WATER CONNECTIONS (LESS THAN 3-INCH DIAMETER)	10.00	L.F.	100	00	1,000	00
098	**64.12ESEG** EXTENDING HOUSE SERVICE WATER CONNECTIONS (EQUAL TO OR GREATER THAN 3-INCH DIAMETER)	210.00	L.F.	100	00	21,000	00
099	**64.12ESLT** EXTENDING HOUSE SERVICE WATER CONNECTIONS (LESS THAN 3-INCH DIAMETER)	30.00	L.F.	80	00	2,400	00
100	**64.13WC08** FURNISHING, DELIVERING AND INSTALLING WET CONNECTION SLEEVE ON 8-INCH WATER MAIN PIPE WITH VARIOUS OUTLETS	1.00	EACH	1,800	00	1,800	00

NEW YORK CITY DEPARTMENT OF DESIGN AND CONSTRUCTION
DIVISION OF INFRASTRUCTURE - BUREAU OF DESIGN

PROJECT ID: QED1007
CONTRACT PIN: 8502014WM0013C

BID SCHEDULE FORM

COL. 1	COL. 2	COL. 3	COL. 4	COL. 5 UNIT PRICE (IN FIGURES)		COL. 6 EXTENDED AMOUNT (IN FIGURES)	
SEQ. NO	ITEM NUMBER and DESCRIPTION	ENGINEER'S ESTIMATE OF QUANTITIY	UNIT	DOLLARS	CTS	DOLLARS	CTS
101	**64.13WC12** FURNISHING, DELIVERING AND INSTALLING WET CONNECTION SLEEVE ON 12-INCH WATER MAIN PIPE WITH VARIOUS OUTLETS	9.00	EACH	2,000	00	18,000	00
102	**65.11BR** FURNISHING, DELIVERING AND INSTALLING BANDS, RODS, WASHERS, ETC., COMPLETE, FOR RESTRAINING JOINTS	5,100.00	LBS.		01	51	00
103	**65.21PS** FURNISHING AND PLACING POLYETHYLENE SLEEVE **Unit price bid shall not be less than: $ 0.50**	3,500.00	L.F.		50	1,750	00
104	**65.31FF** FURNISHING, DELIVERING AND PLACING FILTER FABRIC **Unit price bid shall not be less than: $ 0.10**	68,800.00	S.F.		10	6,880	00
105	**65.41PS06** FURNISHING, DELIVERING AND INSTALLING 6-INCH PIPE-TO-WALL PENETRATION SEAL, INCLUDING STEEL SLEEVE AND ANCHOR/WATER STOP PLATE	2.00	EACH	2,000	00	4,000	00

NEW YORK CITY DEPARTMENT OF DESIGN AND CONSTRUCTION
DIVISION OF INFRASTRUCTURE - BUREAU OF DESIGN

PROJECT ID: QED1007
CONTRACT PIN: 8502014WM0013C

BID SCHEDULE FORM

COL. 1 SEQ. NO	COL. 2 ITEM NUMBER and DESCRIPTION	COL. 3 ENGINEER'S ESTIMATE OF QUANTITIY	COL. 4 UNIT	COL. 5 UNIT PRICE (IN FIGURES) DOLLARS	CTS	COL. 6 EXTENDED AMOUNT (IN FIGURES) DOLLARS	CTS
106	**65.41PS12** FURNISHING, DELIVERING AND INSTALLING 12-INCH PIPE-TO-WALL PENETRATION SEAL, INCLUDING STEEL SLEEVE AND ANCHOR/WATER STOP PLATE	4.00	EACH	3,000	00	12,000	00
107	**65.41PS36** FURNISHING, DELIVERING AND INSTALLING 36-INCH PIPE-TO-WALL PENETRATION SEAL, INCLUDING STEEL SLEEVE AND ANCHOR/WATER STOP PLATE	4.00	EACH	7,500	00	30,000	00
108	**65.51PC** FURNISHING AND PLACING CAST-IN-PLACE CONCRETE CLASS 40 AND PRECAST CONCRETE CLASS 50	125.00	C.Y.	1,500	00	187,500	00
109	**65.61SS** FURNISHING, DELIVERING AND PLACING STRUCTURAL, REINFORCING AND MISCELLANEOUS STEEL	14,450.00	LBS.	10	00	144,500	00
110	**65.71SG** FURNISHING, DELIVERING AND PLACING SCREENED GRAVEL OR SCREENED BROKEN STONE BEDDING	875.00	C.Y.	35	00	30,625	00

NEW YORK CITY DEPARTMENT OF DESIGN AND CONSTRUCTION
DIVISION OF INFRASTRUCTURE - BUREAU OF DESIGN

PROJECT ID: QED1007
CONTRACT PIN: 8502014WM0013C

BID SCHEDULE FORM

COL. 1	COL. 2	COL. 3	COL. 4	COL. 5 UNIT PRICE (IN FIGURES)		COL. 6 EXTENDED AMOUNT (IN FIGURES)	
SEQ. NO	ITEM NUMBER and DESCRIPTION	ENGINEER'S ESTIMATE OF QUANTITIY	UNIT	DOLLARS	CTS	DOLLARS	CTS
111	**7.13 B** MAINTENANCE OF SITE **Unit price bid shall not be less than: $ 8,000.00**	12.00	MONTH	8,000	00	96,000	00
112	**7.36** PEDESTRIAN STEEL BARRICADES	7,650.00	L.F.	1	00	7,650	00
113	**7.88 AA** RODENT INFESTATION SURVEY AND MONITORING **Unit price bid shall not be less than: $ 3,500.00**	1.00	L.S.	3,500	00	3,500	00
114	**7.88 AB** RODENT BAIT STATIONS **Unit price bid shall not be less than: $ 60.00**	115.00	EACH	60	00	6,900	00
115	**7.88 AC** BAITING OF RODENT BAIT STATIONS **Unit price bid shall not be less than: $ 9.25**	115.00	EACH	10	00	1,150	00
116	**7.88 AD** WATERBUG BAIT APPLICATIONS **Unit price bid shall not be less than: $ 65.00**	250.00	BLOCK	65	00	16,250	00

NEW YORK CITY DEPARTMENT OF DESIGN AND CONSTRUCTION
DIVISION OF INFRASTRUCTURE - BUREAU OF DESIGN

PROJECT ID: QED1007
CONTRACT PIN: 8502014WM0013C

BID SCHEDULE FORM

COL. 1 SEQ. NO	COL. 2 ITEM NUMBER and DESCRIPTION	COL. 3 ENGINEER'S ESTIMATE OF QUANTITIY	COL. 4 UNIT	COL. 5 UNIT PRICE (IN FIGURES) DOLLARS	CTS	COL. 6 EXTENDED AMOUNT (IN FIGURES) DOLLARS	CTS
117	70.11TT TIMBER PILES (TREATED) **Unit price bid shall not be less than: $ 17.50**	20,040.00	V.F.	17	50	350,700	00
118	70.21DK DECKING	775.00	S.Y.	75	00	58,125	00
119	70.31FN FENCING **Unit price bid shall not be less than: $ 2.00**	16,400.00	L.F.	2	00	32,800	00
120	70.51EO EXCAVATION OF BOULDERS IN OPEN CUT **Unit price bid shall not be less than: $ 75.00**	40.00	C.Y.	75	00	3,000	00
121	70.71SB STONE BALLAST **Unit price bid shall not be less than: $ 15.00**	285.00	C.Y.	75	00	21,375	00
122	70.81CB CLEAN BACKFILL **Unit price bid shall not be less than: $ 15.00**	2,075.00	C.Y.	40	00	83,000	00

NEW YORK CITY DEPARTMENT OF DESIGN AND CONSTRUCTION
DIVISION OF INFRASTRUCTURE - BUREAU OF DESIGN

PROJECT ID: QED1007
CONTRACT PIN: 8502014WM0013C

BID SCHEDULE FORM

COL. 1 SEQ. NO	COL. 2 ITEM NUMBER and DESCRIPTION	COL. 3 ENGINEER'S ESTIMATE OF QUANTITIY	COL. 4 UNIT	COL. 5 UNIT PRICE (IN FIGURES) DOLLARS	CTS	COL. 6 EXTENDED AMOUNT (IN FIGURES) DOLLARS	CTS
123	**70.91SW12** FURNISHING AND PLACING SHEETING AND BRACING IN TRENCH FOR WATER MAIN PIPE 12-INCH IN DIAMETER AND LESS	3,100.00	S.F.		01	3,	00
124	**70.91SW20** FURNISHING AND PLACING SHEETING AND BRACING IN TRENCH FOR WATER MAIN PIPE 20-INCH IN DIAMETER	290.00	S.F.	5	00	1,450	00
125	**73.11AB** ADDITIONAL BRICK MASONRY **Unit price bid shall not be less than: $ 62.50**	35.00	C.Y.	62	50	2,187	50
126	**73.21AC** ADDITIONAL CONCRETE **Unit price bid shall not be less than: $ 62.50**	185.00	C.Y.	135	00	24,975	00
127	**73.31AE0** ADDITIONAL EARTH EXCAVATION INCLUDING TEST PITS (ALL DEPTHS) **Unit price bid shall not be less than: $ 20.00**	60.00	C.Y.	40	00	2,400	00
128	**73.41AG** ADDITIONAL SELECT GRANULAR BACKFILL **Unit price bid shall not be less than: $ 15.00**	55.00	C.Y.	50	00	2,750	00

NEW YORK CITY DEPARTMENT OF DESIGN AND CONSTRUCTION
DIVISION OF INFRASTRUCTURE - BUREAU OF DESIGN

PROJECT ID: QED1007
CONTRACT PIN: 8502014WM0013C

BID SCHEDULE FORM

COL. 1 SEQ. NO	COL. 2 ITEM NUMBER and DESCRIPTION	COL. 3 ENGINEER'S ESTIMATE OF QUANTITIY	COL. 4 UNIT	COL. 5 UNIT PRICE (IN FIGURES) DOLLARS	CTS	COL. 6 EXTENDED AMOUNT (IN FIGURES) DOLLARS	CTS
129	**73.51AS** ADDITIONAL STEEL REINFORCING BARS **Unit price bid shall not be less than: $ 1.00**	8,970.00	LBS.	2	00	17,940	00
130	**76.11CR** CONSTRUCTION REPORT	1.00	L.S.	25,000	00	25,000	00
131	**76.21MR** MONITORING AND POST-CONSTRUCTION REPORT	1.00	L.S.	25,000	00	25,000	00
132	**UTL-6.01.1** GAS MAIN CROSSING SEWER UP TO 24" IN DIAMETER (S6.01) **Unit price bid shall not be less than: $ 1,040.00**	9.00	EACH	1,248	00	11,232	00
133	**UTL-6.01.11** GAS MAIN CROSSING WATER MAIN 36" THRU 42" IN DIAMETER (S6.01) **Unit price bid shall not be less than: $ 685.00**	6.00	EACH	822	00	4,932	00
134	**UTL-6.01.9** GAS MAIN CROSSING WATER MAIN UP TO 20" IN DIAMETER (S6.01) **Unit price bid shall not be less than: $ 485.00**	5.00	EACH	582	00	2,910	00

NEW YORK CITY DEPARTMENT OF DESIGN AND CONSTRUCTION
DIVISION OF INFRASTRUCTURE - BUREAU OF DESIGN

PROJECT ID: QED1007
CONTRACT PIN: 8502014WM0013C

BID SCHEDULE FORM

COL. 1	COL. 2	COL. 3	COL. 4	COL. 5 UNIT PRICE (IN FIGURES)		COL. 6 EXTENDED AMOUNT (IN FIGURES)	
SEQ. NO	ITEM NUMBER and DESCRIPTION	ENGINEER'S ESTIMATE OF QUANTITIY	UNIT	DOLLARS	CTS	DOLLARS	CTS
135	**UTL-6.02** EXTRA EXCAVATION FOR THE INSTALLATION OF CATCH BASIN SEWER DRAIN PIPES WITH GAS INTERFERENCES (S6.02) **Unit price bid shall not be less than: $ 715.00**	2.00	EACH	858	00	1,716	00
136	**UTL-6.03** REMOVAL OF ABANDONED GAS FACILITIES. ALL SIZES. (S6.03) **Unit price bid shall not be less than: $ 15.00**	4,000.00	L.F.	18	00	72,000	00
137	**UTL-6.03.1** REMOVAL OF ABANDONED GAS FACILITIES WITH POSSIBLE COAL TAR WRAP. ALL SIZES. (S6.03) **Unit price bid shall not be less than: $ 25.00**	1,000.00	L.F.	30	00	30,000	00
138	**UTL-6.04** ADJUST HARDWARE TO GRADE USING SPACER RINGS/ADAPTORS. (STREET REPAVING.) (S6.04) **Unit price bid shall not be less than: $ 35.00**	5.00	EACH	84	00	420	00
139	**UTL-6.05** ADJUST HARDWARE TO GRADE BY RESETTING. (ROAD RECONSTRUCTION.) (S6.05) **Unit price bid shall not be less than: $ 65.00**	10.00	EACH	156	00	1,560	00
140	**UTL-6.06** SPECIAL CARE EXCAVATION AND BACKFILLING (S6.06) **Unit price bid shall not be less than: $ 180.00**	500.00	C.Y.	216	00	108,000	00

NEW YORK CITY DEPARTMENT OF DESIGN AND CONSTRUCTION
DIVISION OF INFRASTRUCTURE - BUREAU OF DESIGN

PROJECT ID: QED1007
CONTRACT PIN: 8502014WM0013C

BID SCHEDULE FORM

COL. 1 SEQ. NO	COL. 2 ITEM NUMBER and DESCRIPTION	COL. 3 ENGINEER'S ESTIMATE OF QUANTITIY	COL. 4 UNIT	COL. 5 UNIT PRICE (IN FIGURES) DOLLARS	CTS	COL. 6 EXTENDED AMOUNT (IN FIGURES) DOLLARS	CTS
141	**UTL-6.07** TEST PITS FOR GAS FACILITIES (S6.07) **Unit price bid shall not be less than: $ 100.00**	30.00	C.Y.	120	00	3,600	00
142	**UTL-GCS-2WS** GAS INTERFERENCES AND ACCOMMODATIONS **PRICE BID SHALL BE FOR THE FIXED SUM OF $ 60,000.00**	1.00	F.S.	60,000	00	60,000	00

SUB-TOTAL: $ 9,300,062 10

143	**6.39 A** MOBILIZATION **BID PRICE OF MOBILIZATION SHALL NOT EXCEED 4% OF THE ABOVE SUB-TOTAL PRICE.**	1.00	L.S.	371,000	04	371,000	04

TOTAL BID PRICE: $ 9,671,062.14

PLEASE BE SURE A LEGIBLE BID IS ENTERED FOR EACH ITEM.
THE BIDDER SHALL INSERT THE TOTAL BID PRICE IN
THE BID FORM ON PAGE C-4 OF THIS BID BOOKLET.

BID FORM
THE CITY OF NEW YORK
DEPARTMENT OF DESIGN AND CONSTRUCTION
DIVISION OF INFRASTRUCTURE

BID FOR FURNISHING ALL LABOR AND MATERIAL NECESSARY AND REQUIRED FOR:

PROJECT ID: QED1007

FOR THE CONSTRUCTION OF TRUNK AND DISTRIBUTION WATER MAINS IN ARVERNE BOULEVARD BETWEEN BEACH 59TH STREET AND BEACH 54TH STREET; ROCKAWAY BEACH BOULEVARD BETWEEN BEACH 54TH STREET AND BEACH 49TH STREET; BEACH 67TH STREET BETWEEN ROCKAWAY FREEWAY AND ROCKAWAY BEACH BOULEVARD; ROCKAWAY BEACH BOULEVARD BETWEEN BEACH 54TH STREET AND BEACH 53RD STREET; AND ROCKAWAY BEACH BOULEVARD BETWEEN BEACH 52ND STREET AND BEACH 49TH STREET

INCLUDING STORM AND SANITARY SEWER WORK

Together With All Work Incidental Thereto
BOROUGH OF QUEENS

Name of Bidder: CAC Industries Inc

Date of Bid Opening: 10/20/15

Bidder is: (Check one, whichever applies) Individual ( ) Partnership ( ) Corporation (✓)

Place of Business of Bidder: 5408 Vernon Blvd LIC NY 11101

Bidder's Telephone Number: 718 729-3600 Fax Number: 718 729-0400

Bidder's E-Mail Address: JLaBozzetta@CACIndInc.com

Residence of Bidder (If Individual): _____

If Bidder is a Partnership, fill in the following blanks:

Names of Partners	Residence of Partners
_____	_____
_____	_____
_____	_____

If Bidder is a Corporation, fill in the following blanks:

Organized under the laws of the State of New York

Name and Home Address of President: Michael A Capasso
45 E 72nd St NYC, NY 10022

Name and Home Address of Secretary: Same

Name and Home Address of Treasurer: _____

BID FORM

The above-named Bidder affirms and declares:

1. The said bidder is of lawful age and the only one interested in this bid; and no person, firm or corporation other than hereinbefore named has any interest in this bid, or in the Contract proposed to be taken.

2. By submission of this bid, each bidder and each person signing on behalf of any bidder certifies, and in the case of a joint bid each party thereto certifies as to its own organization, under penalty of perjury, that to the best of its knowledge and belief: (1) the prices in this bid have been arrived at independently without collusion, consultation, communication or agreement, for the purpose of restricting competition, as to any matter relating to such prices with any other bidder or with any competitor; (2) unless otherwise required by law, the prices quoted in this bid have not been knowingly disclosed by the bidder and will not knowingly be disclosed by the bidder prior to opening, directly or indirectly, to any other bidder or to any competitor; and (3) No attempt has been made or will be made by the bidder to induce any other person, partnership or corporation to submit or not to submit a bid for the purpose of restricting competition.

3. No councilman or other officer or employee or person whose salary is payable in whole or in part from the City Treasury is directly or indirectly interested in this bid, or in the supplies, materials, equipment, work or labor to which it relates, or in any of the profits thereof.

4. The bidder is not in arrears to the City of New York upon debt or contract or taxes, and is not a defaulter, as surety or otherwise, upon any obligation of the City of New York, and has not been declared not responsible, or disqualified, by any agency of the City of New York or State of New York, nor is there any proceeding pending relating to the responsibility or qualification of the bidder to receive public contracts except as set forth on the Affirmation included as page C-6 of this Bid Booklet.

The bidder hereby affirms that it has paid all applicable City income, excise and other taxes for all years it has conducted business activities in New York City.

5. The bidder, as an individual, or as a member, partner, director or officer of the bidder, if the same be a firm, partnership or corporation, executes this document expressly warranting and representing that should this bid be accepted by the City and the Contract awarded to him, he and his subcontractors engaged in the performance: (1) will comply with the provisions of Section 6-108 of the Administrative Code of the City of New York and the non-discrimination provisions of Section 220a of the New York State Labor Law, as more expressly and in detail set forth in the Agreement; (2) will comply with Section 6-109 of the Administrative Code of the City of New York in relation to minimum wages and other stipulations as more expressly and in detail set forth in the Agreement; (3) have complied with the provisions of the aforesaid laws since their respective effective dates, and (4) will post notices to be furnished by the City, setting forth the requirements of the aforesaid laws in prominent and conspicuous places in each and every plant, factory, building and structure where employees engaged in the performance of the Contract can readily view it, and will continue to keep such notices posted until the supplies, materials and equipment, or work labor and services required to be furnished or rendered by the Contractor have been finally accepted by the City. In the event of any breach or violation of the foregoing, the Contractor may be subject to damages, liquidated or otherwise, cancellation of the Contract and suspension as a bidder for a period of three years. (The words, "the bidder", "he", "his", and "him" where used herein shall mean the individual bidder, firm, partnership or corporation executing the bid).

6. Compliance Report

The bidder, as an individual, or as a member, partner, director, or officer of the bidder, if the same be a firm, partnership, or corporation, (1) represents that his attention has been specifically drawn to Executive Order No. 50, dated, April 25, 1980, on Equal Employment Compliance of the contract, and (2) warrants that he will comply with the provisions of Executive Order No. 50. The Employment Report must be submitted as part of the bid.

The bidder, as an individual, or as a member, partner, director, or officer of the bidder, if the same be a firm, partnership, or corporation, executes this document expressly warranting that he will comply with: (1) the provision of the contract on providing records, Chapter 8.

7. By submission of this bid, the bidder certifies that it now has and will continue to have the financial capability to fully perform the work required for this contract. Any award of this contract will be made in reliance upon such certification. Upon request therefor, the bidder will submit written verification of such financial capability in a form that is acceptable to the department.

8. In accordance with Section 165 of the State Finance Law, the bidder agrees that tropical hardwoods, as defined in Section 165 of the State Finance Law, shall not be utilized in the performance of this Contract, except as the same are permitted by the foregoing provision of law.

9. The bidder has visited and examined the site of the work and has carefully examined the Contract in the form approved by the Corporation Counsel, and will execute the Contract and perform all its items, covenants and conditions, and will provide, furnish and deliver all the work, materials, supplies, tools and appliances for all labor and materials necessary or required for the hereinafter named work, all in strict conformity with the Contract, for the prices set forth in the Bid Schedule:

10. M/WBE UTILIZATION PLAN: By signing its bid, the bidder agrees to the Vendor Certification and Required Affirmations set forth below, unless a full waiver of the Participation Goals is granted. The Vendor Certification and Required Affirmations will be deemed to satisfy the requirement to complete Section V of Part II of Schedule B: M/WBE Utilization Plan.

Section V: Vendor Certification and Required Affirmations:

I hereby:

1) acknowledge my understanding of the M/WBE participation requirements as set forth in this Contract and the pertinent provisions of Section 6-129 of the Administrative Code of the City of New York and the rules promulgated thereunder;
2) affirm that the information supplied in support of the M/WBE Utilization Plan is true and correct;
3) agree, if awarded this Contract, to comply with the M/WBE participation requirements of this Contract, the pertinent provisions of Section 6-129, and the rules promulgated thereunder, all of which shall be deemed to be material terms of this Contract;
4) agree and affirm that it is a material term of this Contract that the Vendor will award the total dollar value of the M/WBE Participation Goals to certified MBEs and/or WBEs, unless a full waiver is obtained or such goals are modified by the Agency; and
5) agree and affirm, if awarded this Contract, to make all reasonable, good faith efforts to meet the M/WBE Participation Goals, or If a partial waiver is obtained or such goals are modified by the Agency, to meet the modified Participation Goals by soliciting and obtaining the participation of certified MBE and/or WBE firms.

(NO TEXT ON THIS PAGE)

BID FORM

PROJECT ID: QED1007

TOTAL BID PRICE: In the space provided below, the Bidder shall indicate its Total Bid Price in figures. Such Total Bid Price is set forth on the final page of the Bid Schedule.

TOTAL BID PRICE:
(a/k/a BID PROPOSAL)

$ 9,671,062.14
BB 11/6/15

BIDDER'S SIGNATURE AND AFFIDAVIT

Bidder: CAC Industries Inc

By: _____
(Signature of Partner or corporate officer)

_____
Secretary of Corporate Bidder

Attest:
(Corporate Seal)

Affidavit on the following page should be subscribed
and sworn to before a Notary Public

BID FORM (TO BE NOTARIZED)

AFFIDAVIT WHERE BIDDER IS AN INDIVIDUAL

STATE OF NEW YORK, COUNTY OF _____ ss:

_____ being duly sworn says:

I am the person described in and who executed the foregoing bid, and the several matters therein stated are in all respects true.

_____

(Signature of the person who signed the Bid)

Subscribed and sworn to before me this

_____ day of _____, _____

_____

Notary Public

AFFIDAVIT WHERE BIDDER IS A PARTNERSHIP

STATE OF NEW YORK, COUNTY OF _____ ss:

_____ being duly sworn says:

I am a member of _____ the firm described in and which executed the foregoing bid. I subscribed the name of the firm thereto on behalf of the firm, and the several matters therein stated are in all respects true.

_____

(Signature of Partner who signed the Bid)

Subscribed and sworn to before me this

_____ day of _____, _____

_____

Notary Public

AFFIDAVIT WHERE BIDDER IS A CORPORATION

STATE OF NEW YORK, COUNTY OF Queens ss:

Michael A Cuprisin being duly sworn says:

I am the President of the above named corporation whose name is subscribed to and which executed the foregoing bid. I reside at 45E 72nd St NYC NY 10022

I have knowledge of the several matters therein stated, and they are in all respects true.

_____

(Signature of Partner who signed the Bid)

Subscribed and sworn to before me this

20th day of Oct, 2015

_____

Notary Public

DIANE C. DERIN
Notary Public, State of New York
No. 01DE5048152
Qualified in Queens County
Commission Expires August 15, 2017

AFFIRMATION

PROJECT ID: QED1007

The undersigned bidder affirms and declares that said bidder is not in arrears to the City of New York upon debt, contract or taxes and is not a defaulter, as surety or otherwise, upon obligation to the City of New York, and has not been declared not responsible, or disqualified, by any agency of the City of New York, nor is there any proceeding pending relating to the responsibility or qualification of the bidder to receive public contracts except:

NONE

(If none, the bidder shall insert the word "None" in the space provided above.)

Full Name of Bidder: CAC INDUSTRIES INC

Address: 5408 VERNON BLVD

City LIC State NY Zip Code 11101

CHECK ONE BOX AND INCLUDE APPROPRIATE NUMBER:

/__/ A - Individual or Sole Proprietorship*
SOCIAL SECURITY NUMBER

__/ B - Partnership, Joint Venture or other unincorporated organization
EMPLOYER IDENTIFICATION NUMBER

/✓/ C- Corporation
EMPLOYER IDENTIFICATION NUMBER
11-3082726

By: _____
Signature

Title: President

If a corporation, place seal here

This affirmation must be signed by an officer or duly authorized representative.

*Under the Federal Privacy Act the furnishing of Social Security Numbers by bidders on City contracts is voluntary. Failure to provide a Social Security Number will not result in a bidder's disqualification. Social Security Numbers will be used to identify bidders, proposers or vendors to ensure their compliance with laws, to assist the City in enforcement of laws, as well as to provide the City a means of identifying of businesses which seek City contracts.

(NO TEXT ON THIS PAGE)

BID BOND 1
FORM OF BID BOND

KNOW ALL MEN BY THESE PRESENTS. That we,_____
_____
_____

hereinafter referred to as the "Principal", and _____
_____
_____
_____

hereinafter referred to as the "Surety" are held and firmly bound to THE CITY OF NEW YORK, hereinafter referred to as the "CITY", or to its successors and assigns in the penal sum of _____

_____

($_____), Dollars lawful money of the United States, for the payment of which said sum of money well and truly to be made, we, and each of us, bind ourselves, our heirs, executors, administrators, successors and assigns, jointly and severally, firmly by these presents.

Whereas, the Principal is about to submit (or has submitted) to the City the accompanying proposal, hereby made a part hereof, to enter into a contract in writing for _____

_____

_____

NOW, THEREFORE, the conditions of this obligation are such that if the Principal shall not withdraw said Proposal without the consent of the City for a period of forty-five (45) days after the opening of bids and in the event of acceptance of the Principal's Proposal by the City, if the Principal shall:

(a) Within ten (10) days after notification by the City, execute in quadruplicate and deliver to the City all the executed counterparts of the Contract in the form set forth in the Contract Documents, in accordance with the proposal as accepted, and

(b) Furnish a performance bond and separate payment bond, as may be required by the City, for the faithful performance and proper fulfillment of such Contract, which bonds shall be satisfactory in all respects to the City and shall be executed by good and sufficient sureties, and

(c) In all respects perform the agreement created by the acceptance of said Proposal as provided in the Information for Bidders, bound herewith and made a part hereof, or if the City shall reject the aforesaid Proposal, then this obligation shall be null and void; otherwise to remain in full force and effect.

BID BOND 2

In the event that the Proposal of the Principal shall be accepted and the Contract be awarded to him the Surety hereunder agrees subject only to the payment by the Principal of the premium therefore, if requested by the City, to write the aforementioned performance and payment bonds in the form set forth in the Contract Documents.

It is expressly understood and agreed that the liability of the Surety for any and all claims hereunder shall in no event exceed the penal amount of this obligation as herein stated.

There shall be no liability under this bond if, in the event of the acceptance of the Principal's Proposal by the City, either a performance bond or payment bond, or both, shall not be required by the City on or before the 30th day after the date on which the City signs the Contract.

The surety, for the value received, hereby stipulates and agrees that the obligations of the Surety and its bond shall in no way be impaired or affected by any postponements of the date upon which the City will receive or open bids, or by any extensions of the time within which the City may accept the Principal's Proposal, or by any waiver by the City of any of the requirements of the Information for Bidders, and the Surety hereby waives notice of any such postponements, extensions, or waivers.

IN WITNESS WHEREOF, the Principal and the Surety have hereunto set their hands and seals and such of them as are corporations have caused their corporate seals to be hereto affixed and these presents to be signed by their proper officers the _____ day of _____, _____.

(Seal) _____(L.S.)
Principal

By: _____

(Seal) _____
Surety

By: _____

BID BOND 3

ACKNOWLEDGMENT OF PRINCIPAL, IF A CORPORATION

State of _____ County of _____ ss:
On this _____ day of _____, _____, before me personally came _____ to me known, who, being by me duly sworn, did depose and say that he resides at _____ that he is the _____ of _____ the corporation described in and which executed the foregoing instrument; that he knows the seal of said corporation; that one of the seals affixed to said instrument is such seal; that it was so affixed by order of the directors of said corporation, and that he signed his name thereto by like order.

_____
Notary Public

ACKNOWLEDGMENT OF PRINCIPAL, IF A PARTNERSHIP

State of _____ County of _____ ss:
On this _____ day of _____, _____, before me personally appeared _____ to me known and known to me to be one of the members of the firm of _____ described in and who executed the foregoing instrument, and he acknowledged to me that he executed the same as and for the act and deed of said firm.

_____
Notary Public

ACKNOWLEDGMENT OF PRINCIPAL, IF AN INDIVIDUAL

State of _____ County of _____ ss:
On this _____ day of _____, _____, before me personally appeared _____ to me known and known to me to be the person described in and who executed the foregoing instrument and acknowledged that he executed the same.

_____
Notary Public

AFFIX ACKNOWLEDGMENTS AND JUSTIFICATION OF SURETIES

(NO TEXT ON THIS PAGE)

M/WBE PROGRAM

M/WBE UTILIZATION PLAN

M/WBE Program Requirements: The requirements for the M/WBE Program are set forth on the following pages of this Bid Booklet, in the section entitled "Notice to All Prospective Contractors".

Schedule B: M/WBE Utilization Plan: Schedule B: M/WBE Utilization Plan for this Contract is set forth in this Bid Booklet on the pages following the section entitled "Notice to All Prospective Contractors". The M/WBE Utilization Plan (Part I) indicates whether Participation Goals have been established for this Contract. If Participation Goals have been established for this Contract, the bidder must submit an M/WBE Utilization Plan (Part II) with its bid.

Waiver: The bidder may seek a full or partial pre-award waiver of the Participation Goals in accordance with the "Notice to All Prospective Contractors" (See Part A, Section 10). The bidder's request for a waiver must be submitted at least seven (7) calendar days prior to the bid date. Waiver requests submitted after the deadline will not be considered. The form for requesting a waiver of the Participation Goals is set forth in the M/WBE Utilization Plan (Part III).

Rejection of the Bid: The bidder must complete Schedule B: M/WBE Utilization Plan (Part II) set forth in this Bid Booklet on the pages following the section entitled "Notice to All Prospective Contractors". A Schedule B submitted by the bidder which does not include the Vendor Certification and Required Affirmations (See Section V of Part II) will be deemed to be non-responsive, unless a full waiver of the Participation Goals is granted (Schedule B, Part III). In the event that the City determines that the bidder has submitted a Schedule B where the Vendor Certification and Required Affirmations are completed but other aspects of the Schedule B are not complete, or contain a copy or computation error that is at odds with the Vendor Certification and Required Affirmations, the bidder will be notified by the Agency and will be given four (4) calendar days from receipt of notification to cure the specified deficiencies and return a completed Schedule B to the Agency. Failure to do so will result in a determination that the Bid is non-responsive. Receipt of notification is defined as the date notice is emailed or faxed (if the bidder has provided an email address or fax number), or no later than five (5) calendar days from the date of mailing or upon delivery, if delivered.

Impact on LBE Requirements: If Participation Goals have been established for the participation of M/WBEs, the contractor is not required to comply with the Locally Based Enterprise Program ("LBE"). The LBE Program is set forth in Article 67 of the Contract.

NOTICE TO ALL PROSPECTIVE CONTRACTORS

PARTICIPATION BY MINORITY-OWNED AND WOMEN-OWNED BUSINESS ENTERPRISES IN CITY PROCUREMENT

ARTICLE I. M/WBE PROGRAM

Local Law No. 129 of 2005 added and Local Law 1 of 2013 amended Section 6-129 of the Administrative Code of the City of New York (hereinafter "Section 6-129"). Section 6-129 establishes the program for participation in City procurement ("M/WBE Program") by minority- owned business enterprises ("MBEs") and women-owned business enterprises ("WBEs"), certified in accordance with Section 1304 of the New York City Charter. As stated in Section 6-129, the intent of the program is to address the impact of discrimination on the City's procurement process, and to promote the public interest in avoiding fraud and favoritism in the procurement process, increasing competition for City business, and lowering contract costs. The contract provisions contained herein are pursuant to Section 6-129, and the rules of the Department of Small Business Services ("DSBS") promulgated thereunder.

If this Contract is subject to the M/WBE Program established by Section 6-129, the specific requirements of MBE and/or WBE participation for this Contract are set forth in Schedule B of the Contract (entitled the "M/WBE Utilization Plan"), and are detailed below. The Contractor must comply with all applicable MBE and WBE requirements for this Contract.

All provisions of Section 6-129 are hereby incorporated in the Contract by reference and all terms used herein that are not defined herein shall have the meanings given such terms in Section 6-129. Article I, Part A, below, sets forth provisions related to the participation goals for construction, standard and professional services contracts. Article I, Part B, below, sets forth miscellaneous provisions related to the M/WBE Program.

PART A

PARTICIPATION GOALS FOR CONSTRUCTION, STANDARD AND PROFESSIONAL SERVICES CONTRACTS OR TASK ORDERS

1. The **MBE and/or WBE Participation Goals** established for this Contract or Task Orders issued pursuant to this Contract, ("**Participation Goals**"), as applicable, are set forth on Schedule B, Part I to this Contract (see Page 1, line 1 Total Participation Goals) or will be set forth on Schedule B, Part I to Task Orders issued pursuant to this Contract, as applicable.

The **Participation Goals** represent a percentage of the total dollar value of the Contract or Task Order, as applicable, that may be achieved by awarding subcontracts to firms certified with New York City Department of Small Business Services as MBEs and/or WBEs, and/or by crediting the participation of prime contractors and/or qualified joint ventures as provided in Section 3 below, unless the goals have been waived or modified by Agency in accordance with Section 6-129 and Part A, Sections 10 and 11 below, respectively.

2. If **Participation Goals** have been established for this Contract or Task Orders issued pursuant to this Contract, Contractor agrees or shall agree as a material term of the Contract that Contractor shall be subject to the **Participation Goals**, unless the goals are waived or modified by Agency in accordance with Section 6-129 and Part A, Sections 10 and 11 below, respectively.

3. If **Participation Goals** have been established for this Contract or Task Order issued pursuant to this Contract, a Contractor that is an MBE and/or WBE shall be permitted to count its own participation toward fulfillment of the relevant **Participation Goal**, provided that in accordance with Section 6-129 the value of Contractor's participation shall be determined by subtracting from the total value of the Contract or Task Order, as applicable, any amounts that the Contractor pays to direct subcontractors (as defined in Section 6-129(c)(13)), and provided further that a Contractor that is certified as both an MBE and a WBE may count its own participation either toward the goal for MBEs or the goal for WBEs, but not both.

A Contractor that is a qualified joint venture (as defined in Section 6-129(c)(30)) shall be permitted to count a percentage of its own participation toward fulfillment of the relevant **Participation Goal**. In accordance with Section 6-129, the value of Contractor's participation shall be determined by subtracting from the total value of the Contract or Task Order, as applicable, any amounts that Contractor pays to direct subcontractors, and then multiplying the remainder by the percentage to be applied to total profit to determine the amount to which an MBE or WBE is entitled pursuant to the joint venture agreement, provided that where a participant in a joint venture is certified as both an MBE and a WBE, such amount shall be counted either toward the goal for MBEs or the goal for WBEs, but not both.

4. A. If **Participation Goals** have been established for this Contract, a prospective contractor shall be required to submit with its bid or proposal, as applicable, a completed Schedule B, M/WBE Utilization Plan, Part II (see Pages 2-4) indicating: (a) whether the contractor is an MBE or WBE, or qualified joint venture; (b) the percentage of work it intends to award to direct subcontractors; and (c) in cases where the contractor intends to award direct subcontracts, a description of the type and dollar value of work designated for participation by MBEs and/or WBEs, and the time frames in which such work is scheduled to begin and end. In the event that this M/WBE Utilization Plan indicates that the bidder or proposer, as applicable, does not intend to meet the **Participation Goals**, the bid or proposal, as applicable, shall be deemed non-responsive, unless Agency has granted the bidder or proposer, as applicable, a pre- award waiver of the Participation Goals in accordance with Section 6-129 and Part A, Section 10 below.

B. (i) If this Contract is for a master services agreement or other requirements type contract that will result in the issuance of Task Orders that will be individually registered ("Master Services Agreement") and is subject to M/WBE **Participation Goals**, a prospective contractor shall be required to submit with its bid or proposal, as applicable, a completed Schedule B, M/WBE Participation Requirements for Master Services Agreements That Will Require Individually Registered Task Orders, Part II (page 2) indicating the prospective contractor's certification and required affirmations to make all reasonable good faith efforts to meet participation goals established on each individual Task Order issued pursuant to this Contract, or if a partial waiver is obtained or such goals are modified by the Agency, to meet the modified **Participation Goals** by soliciting and obtaining the participation of certified MBE and/or WBE firms. In the event that the Schedule B indicates that the bidder or proposer, as applicable, does not intend to meet the **Participation Goals** that may be established on Task Orders issued pursuant to this Contract, the bid or proposal, as applicable, shall be deemed nonresponsive.

(ii) **Participation Goals** on a Master Services Agreement will be established for individual Task Orders issued after the Master Services Agreement is awarded. If **Participation Goals** have been established on a Task Order, a contractor shall be required to submit a Schedule B – M/WBE Utilization Plan For Independently Registered Task Orders That Are Issued Pursuant to Master Services Agreements, Part II (see Pages 2-4) indicating: (a) whether the contractor is an MBE or WBE, or qualified joint venture; (b) the percentage of work it intends to award to direct subcontractors; and (c) in cases where the contractor intends to award direct subcontracts, a description of the type and dollar value of work designated for participation by MBEs and/or WBEs, and the time frames in which such work is scheduled to begin and end. The contractor must engage in good faith efforts to meet the **Participation Goals** as established for the Task Order unless Agency has granted the contractor a pre-award waiver of the Participation Goals in accordance with Section 6-129 and Part A, Section 10 below.

C. THE BIDDER/PROPOSER MUST COMPLETE THE SCHEDULE B INCLUDED HEREIN (SCHEDULE B, PART II). A SCHEDULE B SUBMITTED BY THE BIDDER/PROPOSER WHICH DOES NOT INCLUDE THE VENDOR CERTIFICATION AND REQUIRED AFFIRMATIONS (SEE SECTION V OF PART II) WILL BE DEEMED TO BE NON-RESPONSIVE, UNLESS A FULL WAIVER OF THE PARTICIPATION GOALS IS GRANTED (SCHEDULE B, PART III). IN THE EVENT THAT THE CITY DETERMINES THAT THE BIDDER/PROPOSER HAS SUBMITTED A SCHEDULE B WHERE THE VENDOR CERTIFICATION AND REQUIRED AFFIRMATIONS ARE COMPLETED BUT OTHER ASPECTS OF THE SCHEDULE B ARE NOT COMPLETE, OR CONTAIN A COPY OR COMPUTATION ERROR THAT IS AT ODDS WITH THE VENDOR CERTIFICATION AND AFFIRMATIONS, THE BIDDER/PROPOSER WILL BE NOTIFIED BY THE AGENCY AND WILL BE GIVEN FOUR (4) CALENDAR DAYS FROM RECEIPT OF NOTIFICATION TO CURE THE SPECIFIED DEFICIENCIES AND RETURN A COMPLETED SCHEDULE B TO THE AGENCY. FAILURE TO DO

SO WILL RESULT IN A DETERMINATION THAT THE BID/PROPOSAL IS NON-RESPONSIVE. RECEIPT OF NOTIFICATION IS DEFINED AS THE DATE NOTICE IS E-MAILED OR FAXED (IF THE BIDDER/PROPOSER HAS PROVIDED AN E-MAIL ADDRESS OR FAX NUMBER), OR NO LATER THAN FIVE (5) CALENDAR DAYS FROM THE DATE OF MAILING OR UPON DELIVERY, IF DELIVERED.

5. Where an **M/WBE** Utilization Plan has been submitted, the Contractor shall, within 30 days of issuance by Agency of a notice to proceed, submit a list of proposed persons or entities to which it intends to award subcontracts within the subsequent 12 months. In the case of multiyear contracts, such list shall also be submitted every year thereafter. The Agency may also require the Contractor to report periodically about the contracts awarded by its direct subcontractors to indirect subcontractors (as defined in Section 6-129(c)(22)). **PLEASE NOTE: If this Contract is a public works project subject to GML §101(5) (i.e., a contract valued at or below $3M for projects in New York City) or if the Contract is subject to a project labor agreement in accordance with Labor Law §222, and the bidder is required to identify at the time of bid submission its intended subcontractors for the Wicks trades (plumbing and gas fitting; steam heating, hot water heating, ventilating and air conditioning (HVAC); and electric wiring), the Contractor must identify all those to which it intends to award construction subcontracts for any portion of the Wicks trade work at the time of bid submission, regardless of what point in the life of the contract such subcontracts will occur. In identifying intended subcontractors in the bid submission, bidders may satisfy any Participation Goals established for this Contract by proposing one or more subcontractors that are MBEs and/or WBEs for any portion of the Wicks trade work.** In the event that the Contractor's selection of a subcontractor is disapproved, the Contractor shall have a reasonable time to propose alternate subcontractors.

6. MBE and WBE firms must be certified by DSBS in order for the Contractor to credit such firms' participation toward the attainment of the **Participation Goals**. Such certification must occur prior to the firms' commencement of work. A list of MBE and WBE firms may be obtained from the DSBS website at www.nyc.gov/buycertified, by emailing DSBS at buyer@sbs.nyc.gov, by calling (212) 513-6356, or by visiting or writing DSBS at 110 William St., New York, New York, 10038, 7th floor. Eligible firms that have not yet been certified may contact DSBS in order to seek certification by visiting www.nyc.gov/getcertified, emailing MWBE@sbs.nyc.gov, or calling the DSBS certification helpline at (212) 513-6311. A firm that is certified as both an MBE and a WBE may be counted either toward the goal for MBEs or the goal for WBEs, but not both. No credit shall be given for participation by a graduate MBE or graduate WBE, as defined in Section 6-129(c)(20).

7. Where an **M/WBE** Utilization Plan has been submitted, the Contractor shall, with each voucher for payment, and/or periodically as Agency may require, submit statements, certified under penalty of perjury, which shall include, but not be limited to,: the total amount the Contractor paid to its direct subcontractors, and, where applicable pursuant to Section 6-129(j), the total amount direct subcontractors paid to indirect subcontractors; the names, addresses and contact numbers of each MBE or WBE hired as a subcontractor by the Contractor, and, where applicable, hired by any of the Contractor's direct subcontractors; and the dates and amounts paid to each MBE or WBE. The Contractor shall also submit, along with its voucher for final payment: the total amount it paid to subcontractors, and, where applicable pursuant to Section 6-129(j), the total amount its direct subcontractors paid directly to their indirect subcontractors; and a final list, certified under penalty of perjury, which shall include the name, address and contact information of each subcontractor that is an MBE or WBE, the work performed by, and the dates and amounts paid to each.

8. If payments made to, or work performed by, MBEs or WBEs are less than the amount specified in the Contractor's **M/WBE** Utilization Plan, Agency shall take appropriate action, in accordance with Section 6-129 and Article II below, unless the Contractor has obtained a modification of its **M/WBE** Utilization Plan in accordance with Section 6-129 and Part A, Section 11 below.

9. Where an **M/WBE** Utilization Plan has been submitted, and the Contractor requests a change order the value of which exceeds the greater of 10 percent of the Contract or Task Order, as applicable, or $500,000, Agency shall review the scope of work for the Contract or Task Order, as applicable, and the scale and types of work involved in the change order, and determine whether the **Participation Goals** should be modified.

10. Pre-award waiver of the **Participation Goals**. (a) A bidder or proposer, or contractor with respect to a Task Order, may seek a pre-award full or partial waiver of the **Participation Goals** in accordance with Section 6-129, which requests that Agency change one or more **Participation Goals** on the grounds that the **Participation Goals** are unreasonable in light of the availability of certified firms to perform the services required, or by demonstrating that it has legitimate business reasons for proposing a lower level of subcontracting in its M/WBE Utilization Plan.

(b) To apply for a full or partial waiver of the **Participation Goals**, a bidder, proposer, or contractor, as applicable, must complete Part III (Page 5) of Schedule B and submit such request no later than seven (7) calendar days prior to the date and time the bids, proposals, or Task Orders are due, in writing to the Agency by email at poped@ddc.nyc.gov or via facsimile at (718) 391-1886. Bidders, proposers, or contractors, as applicable, who have submitted requests will receive an Agency response by no later than two (2) calendar days prior to the due date for bids, proposals, or Task Orders; provided, however, that if that date would fall on a weekend or holiday, an Agency response will be provided by close-of-business on the business day before such weekend or holiday date.

(c) If the Agency determines that the **Participation Goals** are unreasonable in light of the availability of certified firms to perform the services required, it shall revise the solicitation and extend the deadline for bids and proposals, or revise the Task Order, as applicable.

(d) Agency may grant a full or partial waiver of the **Participation Goals** to a bidder, proposer or contractor, as applicable, who demonstrates—before submission of the bid, proposal or Task Order, as applicable—that it has legitimate business reasons for proposing the level of subcontracting in its **M/WBE** Utilization Plan. In making its determination, Agency shall consider factors that shall include, but not be limited to, whether the bidder, proposer or contractor, as applicable, has the capacity and the bona fide intention to perform the Contract without any subcontracting, or to perform the Contract without awarding the amount of subcontracts represented by the **Participation Goals**. In making such determination, Agency may consider whether the **M/WBE** Utilization Plan is consistent with past subcontracting practices of the bidder, proposer or contractor, as applicable, whether the bidder, proposer or contractor, as applicable, has made efforts to form a joint venture with a certified firm, and whether the bidder, proposer, or contractor, as applicable, has made good faith efforts to identify other portions of the Contract that it intends to subcontract.

11. Modification of **M/WBE** Utilization Plan. (a) A Contractor may request a modification of its **M/WBE** Utilization Plan after award of this Contract. **PLEASE NOTE: If this Contract is a public works project subject to GML §101(5) (i.e., a contract valued at or below $3M for projects in New York City) or if the Contract is subject to a project labor agreement in accordance with Labor Law §222, and the bidder is required to identify at the time of bid submission its intended subcontractors for the Wicks trades (plumbing and gas fitting; steam heating, hot water heating, ventilating and air conditioning (HVAC); and electric wiring), the Contractor may request a Modification of its M/WBE Utilization Plan as part of its bid submission.** The Agency may grant a request for Modification of a Contractor's **M/WBE** Utilization Plan if it determines that the Contractor has established, with appropriate documentary and other evidence, that it made reasonable, good faith efforts to meet the **Participation Goals.** In making such determination, Agency shall consider evidence of the following efforts, as applicable, along with any other relevant factors:

(i) The Contractor advertised opportunities to participate in the Contract, where appropriate, in general circulation media, trade and professional association publications and small business media, and publications of minority and women's business organizations;
(ii) The Contractor provided notice of specific opportunities to participate in the Contract, in a timely manner, to minority and women's business organizations;
(iii) The Contractor sent written notices, by certified mail or facsimile, in a timely manner, to advise MBEs or WBEs that their interest in the Contract was solicited;
(iv) The Contractor made efforts to identify portions of the work that could be substituted for portions originally designated for participation by MBEs and/or WBEs in the M/WBE Utilization Plan, and for which the Contractor claims an inability to retain MBEs or WBEs;

(v) The Contractor held meetings with MBEs and/or WBEs prior to the date their bids or proposals were due, for the purpose of explaining in detail the scope and requirements of the work for which their bids or proposals were solicited;

(vi) The Contractor made efforts to negotiate with MBEs and/or WBEs as relevant to perform specific subcontracts, or act as suppliers or service providers;

(vii) Timely written requests for assistance made by the Contractor to Agency's M/WBE liaison officer and to DSBS;

(viii) Description of how recommendations made by DSBS and Agency were acted upon and an explanation of why action upon such recommendations did not lead to the desired level of participation of MBEs and/or WBEs.

Agency's M/WBE officer shall provide written notice to the Contractor of the determination.

(b) The Agency may modify the **Participation Goals** when the scope of the work has been changed by the Agency in a manner that affects the scale and types of work that the Contractor indicated in its **M/WBE** Utilization Plan would be awarded to subcontractors.

12. If this Contract is for an indefinite quantity of construction, standard or professional services or is a requirements type contract and the Contractor has submitted an **M/WBE** Utilization Plan and has committed to subcontract work to MBEs and/or WBEs in order to meet the **Participation Goals**, the Contractor will not be deemed in violation of the M/WBE Program requirements for this Contract with regard to any work which was intended to be subcontracted to an MBE and/or WBE to the extent that the Agency has determined that such work is not needed.

13. If **Participation Goals** have been established for this Contract or a Task Order issued pursuant to this Contract, at least once annually during the term of the Contract or Task Order, as applicable, Agency shall review the Contractor's progress toward attainment of its M/WBE Utilization Plan, including but not limited to, by reviewing the percentage of work the Contractor has actually awarded to MBE and/or WBE subcontractors and the payments the Contractor made to such subcontractors.

14. If **Participation Goals** have been established for this Contract or a Task Order issued pursuant to this Contract, Agency shall evaluate and assess the Contractor's performance in meeting those goals, and such evaluation and assessment shall become part of the Contractor's overall contract performance evaluation.

PART B: MISCELLANEOUS

1. The Contractor shall take notice that, if this solicitation requires the establishment of an **M/WBE** Utilization Plan, the resulting contract may be audited by DSBS to determine compliance with Section 6-129. See §6-129(e)(10). Furthermore, such resulting contract may also be examined by the City's Comptroller to assess compliance with the **M/WBE** Utilization Plan.

2. Pursuant to DSBS rules, construction contracts that include a requirement for an **M/WBE** Utilization Plan shall not be subject to the law governing Locally Based Enterprises set forth in Section 6-108.1 of the Administrative Code of the City of New York.

3. DSBS is available to assist contractors and potential contractors in determining the availability of MBEs and/or WBEs to participate as subcontractors, and in identifying opportunities that are appropriate for participation by MBEs and/or WBEs in contracts.

4. Prospective contractors are encouraged to enter into qualified joint venture agreements with MBEs and/or WBEs as defined by Section 6-129(c)(30).

5. By submitting a bid or proposal the Contractor hereby acknowledges its understanding of the M/WBE Program requirements set forth herein and the pertinent provisions of Section 6-129, and any rules promulgated thereunder, and if awarded this Contract, the Contractor hereby agrees to comply with the M/WBE Program requirements of this Contract and pertinent provisions of Section 6-129, and any rules promulgated thereunder, all of which shall be deemed to be material terms of this Contract. The Contractor hereby agrees to make all reasonable, good faith efforts to solicit and obtain the participation of MBEs and/or WBEs to meet the required **Participation Goals**.

ARTICLE II. ENFORCEMENT

1. If Agency determines that a bidder or proposer, as applicable, has, in relation to this procurement, violated Section 6-129 or the DSBS rules promulgated pursuant to Section 6-129, Agency may disqualify such bidder or proposer, as applicable, from competing for this Contract and the Agency may revoke such bidder's or proposer's prequalification status, if applicable.

2. Whenever Agency believes that the Contractor or a subcontractor is not in compliance with Section 6-129 or the DSBS rules promulgated pursuant to Section 6-129, or any provision of this Contract that implements Section 6-129, including, but not limited to any **M/WBE** Utilization Plan, Agency shall send a written notice to the Contractor describing the alleged noncompliance and offering the Contractor an opportunity to be heard. Agency shall then conduct an investigation to determine whether such Contractor or subcontractor is in compliance.

3. In the event that the Contractor has been found to have violated Section 6-129, the DSBS rules promulgated pursuant to Section 6-129, or any provision of this Contract that implements Section 6-129, including, but not limited to, any **M/WBE** Utilization Plan, Agency may determine that one of the following actions should be taken:

(a) entering into an agreement with the Contractor allowing the Contractor to cure the violation;
(b) revoking the Contractor's pre-qualification to bid or make proposals for future contracts;
(c) making a finding that the Contractor is in default of the Contract;
(d) terminating the Contract;
(e) declaring the Contractor to be in breach of Contract;
(f) withholding payment or reimbursement;
(g) determining not to renew the Contract;
(h) assessing actual and consequential damages;
(i) assessing liquidated damages or reducing fees, provided that liquidated damages may be based on amounts representing costs of delays in carrying out the purposes of the M/WBE Program, or in meeting the purposes of the Contract, the costs of meeting utilization goals through additional procurements, the administrative costs of investigation and enforcement, or other factors set forth in the Contract;
(j) exercising rights under the Contract to procure goods, services or construction from another contractor and charge the cost of such contract to the Contractor that has been found to be in noncompliance; or
(k) taking any other appropriate remedy.

4. If an **M/WBE** Utilization Plan has been submitted, and pursuant to this Article II, Section 3, the Contractor has been found to have failed to fulfill its **Participation Goals** contained in its **M/WBE** Utilization Plan or the **Participation Goals** as modified by Agency pursuant to Article I, Part A, Section 11, Agency may assess liquidated damages in the amount of ten percent (10%) of the difference between the dollar amount of work required to be awarded to MBE and/or WBE firms to meet the **Participation Goals** and the dollar amount the Contractor actually awarded and paid, and/or credited, to MBE and/or WBE firms. In view of the difficulty of accurately ascertaining the loss which the City will suffer by reason of Contractor's failure to meet the **Participation Goals**, the foregoing amount is hereby fixed and agreed as the liquidated damages that the City will suffer by reason of such failure, and not as a penalty. Agency may deduct and retain out of any monies which may become due under this Contract the amount of any such liquidated damages; and in case the amount which may become due under this Contract shall be less than the amount of liquidated damages suffered by the City, the Contractor shall be liable to pay the difference.

5. Whenever Agency has reason to believe that an MBE and/or WBE is not qualified for certification, or is participating in a contract in a manner that does not serve a commercially useful function (as defined in Section 6-129(c)(8)), or has violated any provision of Section 6- 129, Agency shall notify the Commissioner of DSBS who shall determine whether the certification of such business enterprise should be revoked.

6. Statements made in any instrument submitted to Agency pursuant to Section 6-129 shall be submitted under penalty of perjury and any false or misleading statement or omission shall be grounds for the application of any applicable criminal and/or civil penalties for perjury. The making of a false or fraudulent statement by an MBE and/or WBE in any instrument submitted pursuant to Section 6-129 shall, in addition, be grounds for revocation of its certification.

7. The Contractor's record in implementing its **M/WBE** Utilization Plan shall be a factor in the evaluation of its performance. Whenever Agency determines that a Contractor's compliance with an **M/WBE** Utilization Plan has been unsatisfactory, Agency shall, after consultation with the City Chief Procurement Officer, file an advice of caution form for inclusion in VENDEX as caution data.

APPRENTICESHIP PROGRAM REQUIREMENTS

Bidders are advised that the Apprenticeship Program Requirements set forth below apply to each contract for which a check mark is indicated before the word "Yes". Compliance with these requirements will be determined solely by the City.

____√____ YES _____ NO

(1) Apprenticeship Program Requirements

Notice to Bidders: Please be advised that, pursuant to the authority granted to the City under Labor Law Section 816-b, the Department of Design and Construction hereby requires that the contractor awarded a contract as a result of this Invitation for Bids, and any of its subcontractors with subcontracts worth two million dollars or over, have, prior to entering into such contract or subcontract, apprenticeship agreements appropriate for the type and scope of work to be performed that have been registered with, and approved by, the New York State Commissioner of Labor. In addition, the contractor and its subcontractors will be required to show that such apprenticeship program/s have successfully passed the two year Probation period following the initial registration date of such program/s with the New York State Department of Labor.

The failure to prove, upon request, that these requirements have been met shall result in the contract not being awarded to the contractor or the subcontract not being approved.

Please be further advised that, pursuant to Labor Law Section 220, the allowable ratio of apprentices to journeypersons in any craft classification shall not be greater than the ratio permitted to the contractor as to its workforce on any job under the registered apprenticeship program.

(2) Apprenticeship Program Questionnaire

The bidder must submit a completed and signed Apprenticeship Program Questionnaire. The Questionnaire is set forth on the following page of the Bid Booklet.

APPRENTICESHIP PROGRAM QUESTIONNAIRE

PROJECT ID: QED1007

The bidder must submit a completed and signed Apprenticeship Program Questionnaire.

1. Does the bidder have an Apprenticeship Program appropriate for the type and scope of work to be performed? [Note: Participation may be by either direct sponsorship or through collective bargaining agreement(s).]

✓ YES _____ NO

2. Has the bidder's Apprenticeship Program been registered with, and approved by, the New York State Commissioner of Labor?

✓ YES _____ NO

3. Has the bidder's Apprenticeship Program had three years of successful experience in providing career opportunities?

✓ YES _____ NO

If the answer to Question #3 is "Yes", the bidder shall, in the space below, provide information regarding the experience the Apprenticeship Program has had in providing career opportunities. The bidder may attach additional pages if necessary.

THROUGH COLLECTIVE BARGAINING AGREEMENTS WITH THE LABOR UNIONS VIA GCA

Bidder: QAC Industries Inc

By: _____ Title: President
(Signature of Partner or Corporate Officer)

Date: 10/20/15

THE GENERAL CONTRACTORS ASSOCIATION OF NEW YORK, INC.

Denise M. Richardson
Executive Director

October 30, 2014

C.A.C. Industries Inc.
Attn: Mr. Michael A. Capasso
54-08 Vernon Blvd.
Long Island City, NY 11101

Dear Mr. Capasso:

C.A.C. Industries Inc. is a member in good standing of the General Contractors Association of New York ("GCA"). Through your membership in the GCA, you have authorized the GCA to enter into collective bargaining agreements on your behalf.

As such, your firm is signatory to the collective bargaining agreements and participates in and upholds all provisions of those agreements, including but not limited to participation in the unions' established and approved apprenticeship programs.

The General Contractors Association has collective bargaining agreements with the following unions:

- Laborers International Union of North America
  Local 731, Heavy Construction Laborers
  Local 29 Drillers and Blasters
  Local 147 Tunnel Workers
  Local 1010 Asphalt Pavers
- New York District Council of Carpenters
  Local 1556 Dockbuilders/Timbermen*
  *Formerly Locals 1456 Dockbuilders and 1536 Timbermen dissolved and formed a new Local, 1556
- International Union of Operating Engineers
  Local 14 / 15 Operating Engineers
  Local 15 C Operating Engineers Mechanics & Helpers
  Local 15 D Surveyors
- International Brotherhood of Teamsters Local 282
- Metallic Lathers Local 46

Please contact me if you require additional information.

Sincerely,

Denise M Richardson

Denise M. Richardson

60 E. 42nd Street - Suite 3510, New York, NY 10165 Tel: (212) 687-3131 Fax: (212) 808-5267 Website: www.gcany.net

Pre-Award Process

The bidder is advised that as part of the pre-award review of its bid, it may be required to submit the information described in Sections (A) through (D) below. If required, such information must be submitted by the bidder within five (5) business days following receipt of notification from DDC that it is among the low bidders. Such notification from DDC will be by facsimile or in writing and will specify the types of information must be submitted. The types of information the bidder may be required to submit are described below. In the event the bidder fails to submit the required information within the specified time frame, its bid may be rejected as nonresponsive.

****

(A) **Project Reference Form**: If required, the bidder must complete and submit the Project Reference Form set forth on pages 26 through 28 of this Bid Booklet. The Project Reference Form consists of 3 parts: (1) Similar Contracts Completed by the Bidder, (2) Contracts Currently Under Construction by the Bidder, and (3) Pending Contracts Not Yet Started by the Bidder.

(B) **Copy of License**: If required, the bidder must submit a copy of the license under which the bidder will be performing the work. Such license must clearly show the following: (1) Name of the Licensee, (2) License Number, and (3) Expiration date of the License. A copy of the license will be required from bidders for the following contracts: Plumbing Work, Electrical Work and Asbestos Abatement.

(C) **Financial Information**: If required, the bidder must submit the financial information described below:

(1) Audited Financial Statements: Financial statements (Balance Sheet and Income Statement) of the entity submitting the bid, as audited by an independent auditor licensed to practice as a certified public accountant (CPA). Audited financial statements for the three most recent fiscal years must be submitted. Each such financial statement must include the auditor's standard report.

If the bidder does not have audited financial statements, it must submit an affidavit attesting to the fact that the bidder does not have such statements. In addition, the bidder must submit the following documentation covering the three most recent fiscal years: signed federal tax returns, unaudited financial statements, and a "certified review letter" from a certified public accountant (CPA) verifying the unaudited financial statements.

Unless the most recent audited or unaudited financial statement was issued within ninety (90) days, the bidder must submit interim financial information that includes data on financial position and results of operation (income data) for the current fiscal year. Such information may be summarized on a monthly or quarterly basis or at other intervals.

(2) Schedule of Aged Accounts Receivable, including portion due within ninety (90) days.

(D) **Project Specific Information**: If required, the bidder must submit the project specific information described below:

(1) Statement indicating the number of years of experience the bidder has had and in what type of construction.
(2) Resumes of all key personnel to be involved in the project, including the proposed project superintendent.
(3) List of significant pieces of equipment expected to be used for the contract, and whether such equipment is owned or leased.
(4) Description of work expected to be subcontracted, and to what firms, if known.
(5) List of key material suppliers.
(6) Preliminary bar chart time schedule
(7) Contractor's expected means of financing the project. This should be based on the assumption that the contractor is required to finance 2X average monthly billings throughout the contract period.
(8) Any other issues the contractor sees as impacting his ability to complete the project according to the contract.

In addition to the information described in Sections (A) through (D) above, the bidder shall submit such additional information as the Commissioner may require, including without limitation, an explanation or justification for specific unit price items.

The bidder is further advised that it may be required to attend a pre-award meeting with DDC representatives. If such a meeting is convened, the bidder will be advised as to any additional material to be provided.

A. PROJECT REFERENCES – SIMILAR CONTRACTS COMPLETED BY THE BIDDER

List all contracts substantially completed within the last 4 years similar to the contract being awarded, up to a maximum of 10, in descending order of date of substantial completion.

Project & Location	Contract Type	Contract Amount ($000)	Date Completed	Owner Reference & Tel. No.	Architect/Engineer Reference & Tel. No. if different from owner

B. PROJECT REFERENCES – CONTRACTS CURRENTLY UNDER CONSTRUCTION BY THE BIDDER

List all contracts currently under construction even if they are not similar to the contract being awarded.

Project & Location	Contract Type	Contract Amount ($000)	Subcontracted to Others ($000)	Uncompleted Portion ($000)	Date Scheduled to Complete	Owner Reference & Tel. No.	Architect/Engineer Reference & Tel. No. if different from owner

C. PROJECT REFERENCES – PENDING CONTRACTS NOT YET STARTED BY THE BIDDER

List all contracts awarded to or won by the bidder but not yet started.

Project & Location	Contract Type	Contract Amount ($000)	Date Scheduled to Start	Owner Reference & Tel. No.	Architect/Engineer Reference & Tel. No. if different from owner

(NO TEXT ON THIS PAGE)

OFFICE OF THE MAYOR
BUREAU OF LABOR SERVICES
CONTRACT CERTIFICATE

To be completed if the contract is less than $1,000,000

Contractor: _____

Address: _____

_____

Telephone Number: _____

Name and Title of Signatory: _____

_____

Contracting Agency or Owner: _____

Project Number: _____

Proposed Contract Amount: _____

Description and Address of Proposed Contract: _____

Names of Subcontractors in the amount of 750,000 or more on this contract (if not known at this time, so state indicating that trades will be subcontracted):

_____

_____

_____

I, (fill in name of person signing) _____, hereby affirm that I am authorized by the above-named contractor to certify that said contractor's proposed contract with the above-named owner or city agency is less than $1,000,000. This affirmation is made in accordance with Executive Order No. 50 (1980) as amended and its implementing regulations.

_____ _____

Date Signature

WILLFUL OR FRAUDULENT FALSIFICATION OF ANY DATA OR INFORMATION SUBMITTED HEREWITH MAY RESULT IN THE TERMINATION OF ANY CONTRACT BETWEEN THE CITY AND THE BIDDER OR CONTRACTOR AND BAR THE BIDDER OR CONTRACTOR FROM PARTICIPATION IN ANY CITY CONTRACT FOR A PERIOD OF UP TO THREE YEARS. FURTHER, SUCH FALSIFICATION MAY RESULT IN CRIMINAL PROSECUTION.

(NO TEXT ON THIS PAGE)

VENDEX COMPLIANCE

(A) Vendex Fees: Pursuant to Procurement Policy Board Rule 2-08(f)(2), the contractor will be charged a fee for the administration of the VENDEX system, including the Vendor Name Check process, if a Vendor Name Check review is required to be conducted by the Department of Investigation. The contractor shall also be required to pay the applicable required fees for any of its subcontractors for which Vendor Name Check reviews are required. The fee(s) will be deducted from payments made to the contractor under the contract. For contracts with an estimated value of less than or equal to $1,000,000, the fee will be $175 per Vendor Name Check review. For contracts with an estimated value of greater than $1,000,000, the fee will be $350 per Vendor Name Check review.

(B) Confirmation of Vendex Compliance: The Bidder shall submit this Confirmation of Vendex Compliance to the Department of Design and Construction, Contracts Section, 30-30 Thomson Avenue – First Floor, Long Island City, NY 11101.

Bid Information: The Bidder shall complete the bid information set forth below.

Name of Bidder: C AC INJUSTICE INC
Bidder's Address: 3708 VERNON BLVD LIC NY 11106
Bidder's Telephone Number: 718 729-3600
Bidder's Fax Number: 718 729-0406
Date of Bid Opening: 10/20/15
Project ID: Q481007

Vendex Compliance: To demonstrate compliance with Vendex requirements, the Bidder shall complete either Section (1) or Section (2) below, whichever applies.

(1) **Submission of Vendex Questionnaires to MOCS:** By signing in the space provided below, the Bidder certifies that as of the date specified below, the Bidder has submitted Vendex Questionnaires to the Mayor's Office of Contract Services, Attn: VENDEX, 253 Broadway, 9th Floor, New York, New York 10007.

Date of Submission: _____

By: _____
(Signature of Partner or corporate officer)

Print Name: _____

(2) **Submission of Certification of No Change to DDC:** By signing in the space provided below, the Bidder certifies that it has read the instructions in a "Vendor's Guide to Vendex" and that such instructions do not require the Bidder to submit Vendex Questionnaires. The Bidder has completed **TWO ORIGINALS** of the Certification of No Change set forth on the next page of this Bid Booklet.

By: _____
(Signature of Partner or corporate officer)

Print Name: Michael A Capasso

(NO TEXT ON THIS PAGE)

Certificate of No Change Form

Mayor's Office of Contract Services

- Please submit two completed forms. Copies will not be accepted.
- Please send both copies to the agency that requested it, unless you are advised to send it directly to the Mayor's Office of Contract Services (MOCS).
- A materially false statement willfully or fraudulently made in connection with this certification, and/or the failure to conduct appropriate due diligence in verifying the information that is the subject of this certification, may result in rendering the submitting entity non-responsible for the purpose of contract award.
- A materially false statement willfully or fraudulently made in connection with this certification may subject the person making the false statement to criminal charges

I, Michael A Cipresso, being duly sworn, state that I have read
Enter Your Name

and understand all the items contained in the vendor questionnaire and any submission of change as identified on page one of this form and certify that as of this date, these items have not changed. I further certify that, to the best of my knowledge, information and belief, those answers are full, complete, and accurate; and that, to the best of my knowledge, information, and belief, those answers continue to be full, complete, and accurate.

In addition, I further certify on behalf of the submitting vendor that the information contained in the principal questionnaire(s) and any submission of change identified on page two of this form have not changed and have been verified and continue, to the best of my knowledge, to be full, complete and accurate.

I understand that the City of New York will rely on the information supplied in this certification as additional inducement to enter into a contract with the submitting entity.

Vendor Questionnaire *This section is required.*

This refers to the vendor questionnaire(s) submitted for the vendor doing business with the City.

Name of Submitting Entity: CACTUS Systems INC

Vendor's Address: 5408 VERNON BLVD LIC NY 11101

Vendor's EIN or TIN: 11-3082726 Requesting Agency: _____

Are you submitting this Certification as a parent? (Please circle one) Yes (No)

Signature date on the last full vendor questionnaire signed for the submitting vendor: 11/3/14

Signature date on change submission for the submitting vendor: 7/25/13

Mayor's Office of Contract Services
253 Broadway, 9th Floor New York, NY 10007
Phone: 212 788 0018 Fax: 212 788 0049

Principal Questionnaire

This section refers to the most recent principal questionnaire submissions.

Mayor's Office of Contract Services

	Principal Name	Date of signature on last full Principal Questionnaire	Date(s) of signature on submission of change
1	Michael A Capasso	8/28/14	
2	John M LaBozza	11/3/14	
3	James E McMurray	11/3/14	
4	Richard E Gavin	11/3/14	
5			
6			

☐ Check if additional changes were submitted and attach a document with the date of additional submissions.

Certification *This section is required.*

This form must be signed and notarized. Please complete this twice. Copies will not be accepted.

Certified By:

Michael A Capasso
Name (Print)

President
Title

Action Industries Inc
Name of Submitting Entity

MC
Signature

10/20/15
Date

Notarized By:

Notary Public

Queens
County License Issued

01DE5048152
License Number

Sworn to before me on: 10/20/15
Date

DIANE C. DERIN
Notary Public, State of New York
No. 01DE5048152
Qualified in Queens County
Commission Expires August 14, 2017

Certificate of No Change Form

Mayor's Office of Contract Services

- Please submit two completed forms. Copies will not be accepted.
- Please send both copies to the agency that requested it, unless you are advised to send it directly to the Mayor's Office of Contract Services (MOCS).
- A materially false statement willfully or fraudulently made in connection with this certification, and/or the failure to conduct appropriate due diligence in verifying the information that is the subject of this certification, may result in rendering the submitting entity non-responsible for the purpose of contract award.
- A materially false statement willfully or fraudulently made in connection with this certification may subject the person making the false statement to criminal charges

I, Michael A Capasso, being duly sworn, state that I have read
Enter Your Name

and understand all the items contained in the vendor questionnaire and any submission of change as identified on page one of this form and certify that as of this date, these items have not changed. I further certify that, to the best of my knowledge, information and belief, those answers are full, complete, and accurate; and that, to the best of my knowledge, information, and belief, those answers continue to be full, complete, and accurate.

In addition, I further certify on behalf of the submitting vendor that the information contained in the principal questionnaire(s) and any submission of change identified on page two of this form have not changed and have been verified and continue, to the best of my knowledge, to be full, complete and accurate.

I understand that the City of New York will rely on the information supplied in this certification as additional inducement to enter into a contract with the submitting entity.

Vendor Questionnaire *This section is required.*

This refers to the vendor questionnaire(s) submitted for the vendor doing business with the City.

Name of Submitting Entity: CAC Industries Inc

Vendor's Address: 5408 Vernon Blvd Long Island City

Vendor's EIN or TIN: 11-3682726 Requesting Agency: _____

Are you submitting this Certification as a parent? (Please circle one) Yes (No)

Signature date on the last full vendor questionnaire signed for the submitting vendor: 11/8/14

Signature date on change submission for the submitting vendor: 7/25/13

Principal Questionnaire

This section refers to the most recent principal questionnaire submissions.

Mayor's Office of Contract Services

	Principal Name	Date of signature on last full Principal Questionnaire	Date(s) of signature on submission of change
1	Michael A Chapasso	8/28/14	
2	John M LaBozza	11/3/14	
3	James E McMorrow	11/3/14	
4	Richard E Curtis	11/3/14	
5			
6			

☐ Check if additional changes were submitted and attach a document with the date of additional submissions.

Certification *This section is required.*

This form must be signed and notarized. Please complete this twice. Copies will not be accepted.

Certified By:

Michael A Chapasso
Name (Print)

President
Title

CHC Industries Inc
Name of Submitting Entity

Signature 10/20/15 *Date*

Notarized By:

Notary Public Queens *County License Issued* 01DE5048152 *License Number*

Sworn to before me on: 10/20/15 *Date*

DIANE C. DERIN
Notary Public, State of New York
No. 01DE5048152
Qualified in Queens County
Commission Expires August 14, 2017

IRAN DIVESTMENT ACT COMPLIANCE RIDER

FOR NEW YORK CITY CONTRACTORS

The Iran Divestment Act of 2012, effective as of April 12, 2012, is codified at State Finance Law ("SFL") §165-a and General Municipal Law ("GML") §103-g. The Iran Divestment Act, with certain exceptions, prohibits municipalities, including the City, from entering into contracts with persons engaged in investment activities in the energy sector of Iran. Pursuant to the terms set forth in SFL §165-a and GML §103-g, a person engages in investment activities in the energy sector of Iran if:

(a) The person provides goods or services of twenty million dollars or more in the energy sector of Iran, including a person that provides oil or liquefied natural gas tankers, or products used to construct or maintain pipelines used to transport oil or liquefied natural gas, for the energy sector of Iran; or

(b) The person is a financial institution that extends twenty million dollars or more in credit to another person, for forty-five days or more, if that person will use the credit to provide goods or services in the energy sector in Iran and is identified on a list created pursuant to paragraph (b) of subdivision three of Section 165-a of the State Finance Law and maintained by the Commissioner of the Office of General Services.

A bid or proposal shall not be considered for award nor shall any award be made where the bidder or proposer fails to submit a signed and verified bidder's certification.

Each bidder or proposer must certify that it is not on the list of entities engaged in investment activities in Iran created pursuant to paragraph (b) of subdivision 3 of Section 165-a of the State Finance Law. In any case where the bidder or proposer cannot certify that they are not on such list, the bidder or proposer shall so state and shall furnish with the bid or proposal a signed statement which sets forth in detail the reasons why such statement cannot be made. The City of New York may award a bid to a bidder who cannot make the certification on a case by case basis if:

(1) The investment activities in Iran were made before the effective date of this section (i.e., April 12, 2012), the investment activities in Iran have not been expanded or renewed after the effective date of this section and the person has adopted, publicized and is implementing a formal plan to cease the investment activities in Iran and to refrain from engaging in any new investments in Iran: or

(2) The City makes a determination that the goods or services are necessary for the City to perform its functions and that, absent such an exemption, the City would be unable to obtain the goods or services for which the contract is offered. Such determination shall be made in writing and shall be a public document.

BIDDER'S CERTIFICATION OF COMPLIANCE WITH IRAN DIVESTMENT ACT

Pursuant to General Municipal Law §103-g, which generally prohibits the City from entering into contracts with persons engaged in investment activities in the energy sector of Iran, the bidder/proposer submits the following certification:

[*Please Check One*]

BIDDER'S CERTIFICATION

☑ By submission of this bid or proposal, each bidder/proposer and each person signing on behalf of any bidder/proposer certifies, and in the case of a joint bid each party thereto certifies as to its own organization, under penalty of perjury, that to the best of its knowledge and belief, that each bidder/proposer is not on the list created pursuant to paragraph (b) of subdivision 3 of Section 165-a of the State Finance Law.

☐ I am unable to certify that my name and the name of the bidder/proposer does not appear on the list created pursuant to paragraph (b) of subdivision 3 of Section 165-a of the State Finance Law. I have attached a signed statement setting forth in detail why I cannot so certify.

SIGNATURE

Michael A Capasso
PRINTED NAME

President
TITLE

Sworn to before me this
20th day of Oct, 20 15

Notary Public

Dated: 10/20/15

DIANE C. DERIN
Notary Public, State of New York
No. 01DE5048152
Qualified in Queens County
Commission Expires August 14, 2017

CITY OF NEW YORK
DEPARTMENT OF DESIGN AND CONSTRUCTION
DIVISION OF INFRASTRUCTURE

ADDENDA CONTROL SHEET

BID OPENING DATE: NOVEMBER 6, 2015

PROJECT NO.: QED1007

TITLE: FOR THE CONSTRUCTION OF TRUNK AND DISTRIBUTION WATER MAINS IN ROCKAWAY BEACH BOULEVARD, ETC

ADDENDA ISSUED	No. OF DRAWINGS	DATE
#1: Amendments to Standard Highway Specs.		04/15/2015
#2: Sewer and Water Main Specifications		06/23/2015
#3: Gas Cost Sharing (EP-7) Std. Specifications		06/23/2015
#4: To CET Specifications		06/23/2015
#5: Additional Amendments		10/15/2015



ATTACH TO CONTRACT DOCUMENTS

THE CITY OF NEW YORK
DEPARTMENT OF DESIGN AND CONSTRUCTION
INFRASTRUCTURE DIVISION
BUREAU OF DESIGN

PROJECT ID: QED1007

FOR THE CONSTRUCTION OF TRUNK AND DISTRIBUTION WATER MAINS IN ARVERNE BOULEVARD BETWEEN BEACH 59TH STREET AND BEACH 54TH STREET; ROCKAWAY BEACH BOULEVARD BETWEEN BEACH 54TH STREET AND BEACH 49TH STREET; BEACH 67TH STREET BETWEEN ROCKAWAY FREEWAY AND ROCKAWAY BEACH BOULEVARD; ROCKAWAY BEACH BOULEVARD BETWEEN BEACH 54TH STREET AND BEACH 53RD STREET; AND ROCKAWAY BEACH BOULEVARD BETWEEN BEACH 52ND STREET AND BEACH 49TH STREET

INCLUDING STORM AND SANITARY SEWER WORK

Together With All Work Incidental Thereto

BOROUGH OF QUEENS

ADDENDUM NO. 5

DATED: October 15, 2015

This Addendum is issued for the purpose of amending the requirements of the contract documents and is hereby made part of said contract documents to the same extent as if it was originally included therein.

(1) **Refer** to the Bid and Contract Documents, VOLUME 1 OF 3, Page A-1, Attachment 1 - Bid Information;
Change the dates shown for Submission of Bids To: and for Bid Opening: from "October 20, 2015 to read "November 6, 2015."

(2) **Refer** to the Bid and Contract Documents, VOLUME 1 OF 3, Page 13, Schedule B - MWBE;
Change the dates shown for Bid/Proposal Response Date: from "October 20, 2015 to read "November 6, 2015."

(3) **Refer** to the Bid and Contract Documents, VOLUME 1 OF 3, BID SCHEDULE, pages B-3 to B-28;
Delete all pages in their entirety;
Substitute attached revised pages B-3 (REVISION #1) to B-28 (REVISION #1).

Note: The revised attached bid sheets removes Item No. 60.27RSC36 - FURNISHING, DELIVERING AND INSTALLING 36-INCH DIAMETER BOLTED, SPLIT SLEEVE-TYPE RESTRAINED COUPLING.

(4) **Refer** to the Contract Drawings, Sheet No. 11 of 15, DETAILS OF 36" STEEL WATER MAIN ON CONCRETE SADDLE ON TIMBER PILES, NOTES;
Add the following note:

"5. The width of the pile caps is two feet six inches (2'6")."

By signing in the space provided below, the bidder acknowledges receipt of the two (2) pages of this Addendum plus twenty-six (26) pages of attachments.

THIS ADDENDUM MUST BE SIGNED BY ALL BIDDERS AND ATTACHED TO THEIR BIDS.

G. Saini

GURDIP SAINI, P.E.
Associate Commissioner/Design I

CAC Industries Inc

Name of Bidder

By: mc

BID BOND 1
FORM OF BID BOND

KNOW ALL MEN BY THESE PRESENTS. That we, _____

C.A.C. Industries, Inc.

54-08 Vernon Blvd., Long Island City, NY 11101

hereinafter referred to as the "Principal", and _____

Federal Insurance Company

15 Mountain View Road , Warren, NJ 07059

hereinafter referred to as the "Surety" are held and firmly bound to THE CITY OF NEW YORK, hereinafter referred to as the "CITY", or to its successors and assigns in the penal sum of

Ten Percent of Amount Bid

($ 10%), Dollars lawful money of the United States, for the payment of which said sum of money well and truly to be made, we, and each of us, bind ourselves, our heirs, executors, administrators, successors and assigns, jointly and severally, firmly by these presents.

Whereas, the Principal is about to submit (or has submitted) to the City the accompanying proposal, hereby made a part hereof, to enter into a contract in writing for QED1007 Construction of Trunk & Distribution Water Mains in Arverne Blvd. between Beach 59th Street & Beach 54th Street, Borough of Queens, City of New York.

NOW, THEREFORE, the conditions of this obligation are such that if the Principal shall not withdraw said Proposal without the consent of the City for a period of forty-five (45) days after the opening of bids and in the event of acceptance of the Principal's Proposal by the City, if the Principal shall:

(a) Within ten (10) days after notification by the City, execute in quadruplicate and deliver to the City all the executed counterparts of the Contract in the form set forth in the Contract Documents, in accordance with the proposal as accepted, and

(b) Furnish a performance bond and separate payment bond, as may be required by the City, for the faithful performance and proper fulfullment of such Contract, which bonds shall be satisfactory in all respects to the City and shall be executed by good and sufficient sureties, and

(c) In all respects perform the agreement created by the acceptance of said Proposal as provided in the Information for Bidders, bound herewith and made a part hereof, or if the City shall reject the aforesaid Proposal, then this obligation shall be null and void; otherwise to remain in full force and effect.

BID BOND 2

In the event that the Proposal of the Principal shall be accepted and the Contract be awarded to him the Surety hereunder agrees subject only to the payment by the Principal of the premium therefore, if requested by the City, to write the aforementioned performance and payment bonds in the form set forth in the Contract Documents.

It is expressly understood and agreed that the liability of the Surety for any and all claims hereunder shall in no event exceed the penal amount of this obligation as herein stated.

There shall be no liability under this bond if, in the event of the acceptance of the Principal's Proposal by the City, either a performance bond or payment bond, or both, shall not be required by the City on or before the 30th day after the date on which the City signs the Contract.

The surety, for the value received, hereby stipulates and agrees that the obligations of the Surety and its bond shall in no way be impaired or affected by any postponements of the date upon which the City will receive or open bids, or by any extensions of time within which the City may accept the Principal's Proposal, or by any waiver by the City of any of the requirements of the Information for Bidders, and the Surety hereby waives notice of any such postponements, extensions, or waivers.

IN WITNESS WHEREOF, the Principal and the Surety have hereunto set their hands and seals and such of them as are corporations have caused their corporate seals to be hereto affixed and these presents to be signed by their proper officers the 8th day of October, 2015.

(Seal) C.A.C. Industries, Inc. (L.S.)

Principal

By: _____

(Seal) Federal Insurance Company

Surety

By: _____

Thomas Bean Attorney-in-Fact

BID BOND 3

ACKNOWLEDGEMENT OF PRINCIPAL, IF A CORPORATION

State of New York County of Queens ss:
On this 20th day of Oct, 2015, before me personally came Michael A Cuppari to me known, who, being by me duly sworn, did depose and say that he resides at 45 E 72nd St NY NY 10022
that he is the President of CAC Industries Inc
the corporation described in and which executed the foregoing instrument; that he knows the seal of said corporation; that one of the seals affixed to said instrument is such seal; that it was so affixed by order of the directors of said corporation, and that he signed his name thereto by like order.

DIANE C. DERIN
Notary Public, State of New York
No. 01DE5048152
Qualified in Queens County
Commission Expires August 14, 2017

Notary Public

ACKNOWLEDGEMENT OF PRINCIPAL, IF A PARTNERSHIP

State of _____ County of _____ ss:
On this _____ day of _____, _____, before me personally appeared _____ to me known and known to me to be one of the members of the firm of _____ described in and who executed the foregoing instrument, and he acknowledged to me that he executed the same as and for the act and deed of said firm.

_____
Notary Public

ACKNOWLEDGEMENT OF PRINCIPAL, IF AN INDIVIDUAL

State of _____ County of _____ ss:
On this _____ day of _____, _____, before me personally appeared _____ to me known and known to me to be the person described in and who executed the foregoing instrument and acknowledged that he executed the same.

_____
Notary Public

AFFIX ACKNOWLEDGEMENTS AND JUSTIFICATION OF SURETIES

Chubb Surety

POWER OF ATTORNEY

Federal Insurance Company
Vigilant Insurance Company
Pacific Indemnity Company

Attn: Surety Department
15 Mountain View Road
Warren, NJ 07059

Know All by These Presents, That **FEDERAL INSURANCE COMPANY**, an Indiana corporation, **VIGILANT INSURANCE COMPANY**, a New York corporation, and **PACIFIC INDEMNITY COMPANY**, a Wisconsin corporation, do each hereby constitute and appoint Thomas Bean, George O. Brewster, Desiree Cardlin, Colette R. Chisholm, Susan Lupski, Gerard S. Macholz, Camille Maitland, Robert T. Pearson, Nelly Renchiwich, Rita Sagistano, Vincent Walsh and Mia Woo-Warren of Uniondale, New York ----------

each as their true and lawful Attorney- in- Fact to execute under such designation in their names and to affix their corporate seals to and deliver for and on their behalf as surety thereon or otherwise, bonds and undertakings and other writings obligatory in the nature thereof (other than bail bonds) given or executed in the course of business, and any instruments amending or altering the same, and consents to the modification or alteration of any instrument referred to in said bonds or obligations.

In Witness Whereof, said **FEDERAL INSURANCE COMPANY, VIGILANT INSURANCE COMPANY**, and **PACIFIC INDEMNITY COMPANY** have each executed and attested these presents and affixed their corporate seals on this **20th** day of **July, 2015.**

Dawn M. Chloros, Assistant Secretary

David B. Norris, Jr., Vice President

STATE OF NEW JERSEY

ss.

County of Somerset

On this **20th** day of **July, 2015** before me, a Notary Public of New Jersey, personally came Dawn M. Chloros, to me known to be Assistant Secretary of FEDERAL INSURANCE COMPANY, VIGILANT INSURANCE COMPANY, and PACIFIC INDEMNITY COMPANY, the companies which executed the foregoing Power of Attorney, and the said Dawn M. Chloros, being by me duly sworn, did depose and say that she is Assistant Secretary of FEDERAL INSURANCE COMPANY, VIGILANT INSURANCE COMPANY, and PACIFIC INDEMNITY COMPANY and knows the corporate seals thereof, that the seals affixed to the foregoing Power of Attorney are such corporate seals and were thereto affixed by authority of the By- Laws of said Companies; and that she signed said Power of Attorney as Assistant Secretary of said Companies by like authority; and that she is acquainted with David B. Norris, Jr., and knows him to be Vice President of said Companies; and that the signature of David B. Norris, Jr., subscribed to said Power of Attorney is in the genuine handwriting of David B. Norris, Jr., and was thereto subscribed by authority of said By- Laws and in deponent's presence.

Notarial Seal

KATHERINE J. ADELAAR
NOTARY PUBLIC OF NEW JERSEY
No. 2316685
Commission Expires July 16, 2019

Notary Public

CERTIFICATION

Extract from the By- Laws of FEDERAL INSURANCE COMPANY, VIGILANT INSURANCE COMPANY, and PACIFIC INDEMNITY COMPANY:

"Except as otherwise provided in these By-Laws or by law or as otherwise directed by the Board of Directors, the President or any Vice President shall be authorized to execute and deliver, in the name and on behalf of the Corporation, all agreements, bonds, contracts, deeds, mortgages, and other instruments, either for the Corporation's own account or in a fiduciary or other capacity, and the seal of the Corporation, if appropriate, shall be affixed thereto by any of such officers or the Secretary or an Assistant Secretary. The Board of Directors, the President or any Vice President designated by the Board of Directors may authorize any other officer, employee or agent to execute and deliver, in the name and on behalf of the Corporation, agreements, bonds, contracts, deeds, mortgages, and other instruments, either for the Corporation's own account or in a fiduciary or other capacity, and, if appropriate, to affix the seal of the Corporation thereto. The grant of such authority by the Board or any such officer may be general or confined to specific instances."

I, Dawn M. Chloros, Assistant Secretary of FEDERAL INSURANCE COMPANY, VIGILANT INSURANCE COMPANY, and PACIFIC INDEMNITY COMPANY (the "Companies") do hereby certify that

(i) the foregoing extract of the By- Laws of the Companies is true and correct,
(ii) the Companies are duly licensed and authorized to transact surety business in all 50 of the United States of America and the District of Columbia and are authorized by the U.S. Treasury Department; further, Federal and Vigilant are licensed in the U.S. Virgin Islands, and Federal is licensed in Guam, Puerto Rico, and each of the Provinces of Canada except Prince Edward Island; and
(iii) the foregoing Power of Attorney is true, correct and in full force and effect.

Given under my hand and seals of said Companies at Warren, NJ this October 8, 2015

Dawn M. Chloros, Assistant Secretary

IN THE EVENT YOU WISH TO NOTIFY US OF A CLAIM, VERIFY THE AUTHENTICITY OF THIS BOND OR NOTIFY US OF ANY OTHER MATTER, PLEASE CONTACT US AT ADDRESS LISTED ABOVE, OR BY Telephone (908) 903- 3493 Fax (908) 903- 3656 e-mail: surety@chubb.com

ACKNOWLEDGMENT OF SURETY COMPANY

STATE OF .....New York.....} ss
COUNTY OF ...Nassau.....}

On this ....OCTOBER 8, 2015....., before me personally came.....THOMAS BEAN..... to me know, who, being by me duly sworn, did depose and say; that he/she resides in .....SUFFOLK COUNTY....., State of.....NEW YORK....., that he/she is the Attorney-In-Fact of the .....FEDERAL INSURANCE COMPANY.....the corporation described in which executed the above instrument; that he/she knows the seal of said corporation; that the seal affixed to said instrument is such corporate seal; that is was so affixed by order of the Board of Directors of said corporation; and that he/she signed his/her name thereto by like order; and the affiant did further depose and say that the Superintendent of Insurance of the State of New York, has, pursuant to Section 1111 of the Insurance Law of the State of New York, issued to...FEDERAL INSURANCE COMPANY.....(Surety) his/her certificate of qualification evidencing the qualification of said Company and its sufficiency under any law of the State of New York as surety and guarantor, and the propriety of accepting and approving it as such; and that such certificate has not been revoked.

GRACE ACKERSON
Notary Public, State of New York
Nassau County
Lic. #01AC6111590
Term Expires June 14, 2016

.....
Notary Public

NY acknowledgment

GRACE ACKERSON
Notary Public, State of New York
Nassau County
Lic. #01AC6111590
Term Expires June 14, 2018

FEDERAL INSURANCE COMPANY

STATEMENT OF ASSETS, LIABILITIES AND SURPLUS TO POLICYHOLDERS

Statutory Basis

DECEMBER 31, 2014

(in thousands of dollars)

ASSETS		*LIABILITIES AND SURPLUS TO POLICYHOLDERS*	
Cash and Short Term Investments	$ 110,484	Outstanding Losses and Loss Expenses	$ 12,181,139
United States Government, State and Municipal Bonds	10,245,402	Unearned Premiums	3,654,861
Other Bonds	4,927,443	Ceded Reinsurance Premiums Payable	339,466
Stocks	1,066,355	Provision for Reinsurance	46,470
Other Invested Assets	1,365,367	Other Liabilities	1,434,018
TOTAL INVESTMENTS	17,715,051	TOTAL LIABILITIES	17,655,954
Investments in Affiliates:			
Chubb Investment Holdings, Inc.	3,565,038	Capital Stock	20,980
Pacific Indemnity Company	2,922,214	Paid-In Surplus	3,106,809
Executive Risk Indemnity Inc.	1,258,019	Unassigned Funds	11,700,594
Chubb Insurance Investment Holdings Ltd.	1,162,709		
CC Canada Holdings Ltd.	652,880		
Chubb Insurance Company of Australia Ltd.	480,068	SURPLUS TO POLICYHOLDERS	14,828,383
Great Northern Insurance Company	476,969		
Vigilant Insurance Company	292,313		
Chubb European Investment Holdings SLP	287,633		
Other Affiliates	517,330		
Premiums Receivable	1,679,148		
Other Assets	1,474,965		
TOTAL ADMITTED ASSETS	$ 32,484,337	TOTAL LIABILITIES AND SURPLUS TO POLICYHOLDERS	$ 32,484,337

Investments are valued in accordance with requirements of the National Association of Insurance Commissioners. At December 31, 2014, investments with a carrying value of $518,199,884 were deposited with government authorities as required by law.

State, County & City of New York, — ss:

Yvonne Baker, Assistant Secretary of the Federal Insurance Company being duly sworn, deposes and says that the foregoing Statement of Assets, Liabilities and Surplus to Policyholders of said Federal Insurance Company on December 31, 2014 is true and correct and is a true abstract of the Annual Statement of said Company as filed with the Secretary of the Treasury of the United States for the 12 months ending December 31, 2014.

Subscribed and sworn to before me
this March 11, 2015.

Jeanette Shipsey
Notary Public

JEANETTE SHIPSEY
Notary Public, State of New York
No. 02SH5074142
Qualified in Nassau County
Commission Expires March 10, 2019

Yvonne Baker
Assistant Secretary

PROJECT REFERENCES

C.A.C. INDUSTRIES, INC.

CONTRACTS CURRENTLY UNDER CONSTRUCTION BY THE BIDDER

6/22/2011

Project & Location	Type	Amount	to Others	Portion	to Complete	& Tel. No.	Ref & Tel. No.
Reconstruction of Thursby Avenue, Phase II, etc. Borough of Queens Contract No: HWQ631B1	G.C.	$ 41,544,348.39	$ 250,000.00	$ 6,000,000.00	Jan-12	D.D.C.	Donald Granger, P.E (718) 391-1968
Construction of Storm Sewer & Outfall in B. 42nd St b/w B. Channel Drive & the U.S. Bulkhead Line , Borough of Queens Contract No: SEQ200533	G.C.	$ 5,277,781.60	$ 400,000.00	$ 1,200,000.00	Aug-11	D.D.C.	Donald Granger, P.E (718) 391-1968
World Trade Center - WTC Street, Utilities & Related Infrastructure - Phase I Utilities & Interim Street & Sidewalk Surfaces, Manhattan Contract No: WTC-342.287	G.C.	$ 9,057,261.78	$ 330,000.00	$ 8,200,000.00	Dec-13	The Port Authority	Trevor Wright (212) 435-5151
Rehabilitation of College Point Blvd & Reconstruction of 32nd Ave Borough of Queens Contract No: HWQ1675	G.C.	$ 12,454,452.00	$ 715,000.00	$ 11,000,000.00	Sep-11	D.D.C.	Donald Granger, P.E. (718) 391-1968
Reconstruction of Bronx & Pelham Pkwy East Bound & Pelham Pkwy South from Bronx River Pkwy to Hutchinson River Pkwy, Borough of the Bronx Contract No: HWX710	G.C.	$ 36,165,168.80	$ 3,500,000.00	$ 30,500,000.00	Aug-12	D.D.C.	Joe Cassidy, P.E. (718) 365-2106
Construction of Sanitary & Storm and Appurtenances in 89th Ave, etc. various locations, Borough of Queens Contract No: SEQ002658	G.C.	$ 1,898,354.25	$ 70,000.00	$ 1,200,000.00	Aug-11	D.D.C.	Donald Granger, P.E. (718) 391-1968
Installation of Trunk Mains & Appurtenances in Hudson Street, Manhattan Contract No: MED-596	G.C.	$ 59,494,197.13	$ 2,400,000.00	$ 49,000,000.00	Feb-16	D.D.C.	Ashwinkumar Patel, P.E. (212) 442-7990
Construction of Storm and Combined Sewers in Fairfax Avenue between Waterbury Ave & Fairmount Avenue, Borough of the Bronx Contract No: SEX20039	G.C.	$ 2,245,311.00	$ -	$ 2,200,000.00	Jun-12	D.D.C.	Joe Cassidy, P.E. (718) 365-2106
Reconstruction of East Fordham Rd from Southern Blvd to the Ramps of the Bronx River Parkway - Borough of the Bronx Contract No: HWXP134	G.C.	$ 11,421,586.26	$ -	$ 11,300,000.00	Dec-12	D.D.C.	Joe Cassidy, P.E. (718) 365-2106

PROJECT REFERENCES

C.A.C. INDUSTRIES, INC.

CONTRACTS CURRENTLY UNDER CONSTRUCTION BY THE BIDDER

6/22/2011

Reconstruction of Bailey Place Retaining Wall, etc. Borough of the Bronx Contract No: RWX003	G.C.	$ 5,155,388.10	$ -	$ 5,100,000.00	Sep-12	D.D.C.	Joe Cassidy, P.E. (718) 365-2106

THE GENERAL CONTRACTORS ASSOCIATION OF NEW YORK, INC.

Denise M. Richardson
Executive Director

June 5, 2015

C.A.C. Industries Inc.
Attn: Mr. Michael A. Capasso
54-08 Vernon Blvd.
Long Island City, NY 11101

Dear Mr. Capasso:

C.A.C. Industries Inc. is a member in good standing of the General Contractors Association of New York ("GCA"). Through your membership in the GCA, you have authorized the GCA to enter into collective bargaining agreements on your behalf.

As such, your firm is signatory to the collective bargaining agreements and participates in and upholds all provisions of those agreements, including but not limited to participation in the unions' established and approved apprenticeship programs.

The General Contractors Association has collective bargaining agreements with the following unions:

- Laborers International Union of North America
  Local 731, Heavy Construction Laborers
  Local 29 Drillers and Blasters
  Local 147 Tunnel Workers
  Local 1010 Asphalt Pavers
- New York District Council of Carpenters
  Local 1556 Dockbuilders/Timbermen
- International Union of Operating Engineers
  Local 14 / 15 Operating Engineers
  Local 15 C Operating Engineers Mechanics & Helpers
  Local 15 D Surveyors
- International Brotherhood of Teamsters Local 282
- Metallic Lathers Local 46

Please contact me if you require additional information.

Sincerely,

Charles J. Montalbano, P.E.
Director, Labor Relations

SPECIAL NOTICE TO BIDDERS

The New York City Department of Small Business Services (SBS), in conjunction with the New York Business Development Corporation (NYBDC), have established a **NYC Construction Loan** pilot program to provide prime contractors and subcontractors financing for mobilization costs on certain City construction projects.

Under this initiative, loans are available for early stage mobilization needs such as insurance, labor, supplies and equipment. Bidders are strongly encouraged to visit "Growing Your Business" at www.nyc.gov/nycbusiness to learn more about the loan or contact constructionloan@sbs.nyc.gov / (212) 513-6444 to obtain details and to determine preliminary eligibility.

A successful loan applicant will be required to make an assignment of its contract (or subcontract) payments to the lender NYBDC until the loan is repaid. If the loan is to a subcontractor, a prime contractor must honor the terms of such an assignment.

A prime contractor may not discriminate against a subcontractor or potential subcontractor by reason of the subcontractor's participation, or nonparticipation, in the NYC Construction Loan program.

NOTICE TO VENDORS

Please be advised that, pursuant to the authority granted to the City under Labor Law §816-b, the New York City Department of Design and Construction hereby requires that the contractor awarded a contract as a result of this solicitation, and any of its subcontractors with subcontracts worth two million dollars or over, have, prior to entering into such contract or subcontract, apprenticeship agreements appropriate for the type and scope of work to be performed that have been registered with, and approved by, the New York State Commissioner of Labor. In addition, the contractor and its subcontractors will be required to show that such apprenticeship program/s have successfully passed the two year Probation period following the initial registration date of such program/s with the New York State Department of Labor.

The failure to prove, upon request, that these requirements have been met shall result in the contract not being awarded to the contractor or the subcontractor not being approved.

Please be further advised that, pursuant to Labor Law §220, the allowable ratio of apprentices to journeypersons in any craft classification shall not be greater than the ratio permitted to the contractor as to its workforce on any job under the registered apprenticeship program.

(NO TEXT ON THIS PAGE)

CITY OF NEW YORK

DEPARTMENT OF DESIGN AND CONSTRUCTION DIVISION OF INFRASTRUCTURE

BID BOOKLET

FOR FURNISHING ALL LABOR AND MATERIALS NECESSARY AND REQUIRED FOR:

PROJECT ID: QED1007

FOR THE CONSTRUCTION OF TRUNK AND DISTRIBUTION WATER MAINS IN ARVERNE BOULEVARD BETWEEN BEACH 59TH STREET AND BEACH 54TH STREET; ROCKAWAY BEACH BOULEVARD BETWEEN BEACH 54TH STREET AND BEACH 49TH STREET; BEACH 67TH STREET BETWEEN ROCKAWAY FREEWAY AND ROCKAWAY BEACH BOULEVARD; ROCKAWAY BEACH BOULEVARD BETWEEN BEACH 54TH STREET AND BEACH 53RD STREET; AND ROCKAWAY BEACH BOULEVARD BETWEEN BEACH 52ND STREET AND BEACH 49TH STREET

INCLUDING STORM AND SANITARY SEWER WORK

Together With All Work Incidental Thereto
BOROUGH OF QUEENS

(NO TEXT ON THIS PAGE)

PROJECT ID: QED1007

CITY OF NEW YORK
DEPARTMENT OF DESIGN AND CONSTRUCTION
DIVISION OF INFRASTRUCTURE

BID BOOKLET

TABLE OF CONTENTS

SECTION		PAGE
PART A		
1.	Table of Contents	1
2.	Special Notice to Bidders	2
3.	Attachment 1 – Bid Information	A-1
4.	Bid Schedule	B-1
5.	Bid Form	C-1
6.	Affirmation	C-6
7.	Bid Bond	C-7
8.	M/WBE Program: M/WBE Utilization Plan	5
9.	Apprenticeship Program Requirements	19
PART B		
10.	Safety Questionnaire	21
11.	Pre-award Process	24
12.	Project Reference Form	26
13.	Contract Certificate	29
14.	Vendex Compliance	30
15.	Iran Divestment Act Compliance Rider	31
16.	Construction Employment Report	33

(NO TEXT ON THIS PAGE)

CITY OF NEW YORK
DEPARTMENT OF DESIGN AND CONSTRUCTION
DIVISION OF INFRASTRUCTURE

SPECIAL NOTICE TO BIDDERS

BID SUBMISSION REQUIREMENTS

THE FOLLOWING DOCUMENTS ARE TO BE COMPLETED AND SUBMITTED WITH THE BID:

1. Bid Schedule and Bid Form, including Affirmation
2. Bid Security (if required, see Attachment 1 on Page A-1)
3. Schedule B: M/WBE Utilization Plan (if participation goals have been established)

FAILURE TO SUBMIT ITEMS (1), (2) AND (3)
WILL RESULT IN THE DISQUALIFICATION OF THE BID.

4. Safety Questionnaire
5. Construction Employment Report (if bid is $1,000,000 or more)
6. Contract Certificate (if bid is less than $1,000,000)
7. Confirmation of Vendex Compliance
8. Bidder's Certification of Compliance with Iran Divestment Act
9. Special Experience Requirements (if applicable)
10. Apprenticeship Program Questionnaire (if applicable)
11. Any addenda issued prior to the receipt of bids

FAILURE TO SUBMIT ITEMS (4) THROUGH (11)
MAY RESULT IN THE DISQUALIFICATION OF THE BID.

NOTES:

(1) All of the above referred to blank forms to be completed and submitted with the bid are included in the BID BOOKLET.

(2) If the bidder has any questions or requires additional information, please contact the Department of Design and Construction by phone (718-391- 2601) or by fax (718-391-2615).

(3) VENDEX QUESTIONNAIRES: The Bidder is advised that Vendex Questionnaires and procedures have been changed. Vendex Questionnaires, as well as detailed instructions, may be obtained at www.nyc.gov/vendex. The bidder may also obtain Vendex forms and instructions by contacting the Agency Chief Contracting Officer or the contact person for this contract.

(4) SPECIAL EXPERIENCE REQUIREMENTS: The Bidder is advised that Special Experience Requirements may apply to this contract. Such requirements are set forth on pages 3, 3a, 3b, and 4 of this Bid Booklet.

SPECIAL NOTICE TO BIDDERS

SPECIAL EXPERIENCE REQUIREMENTS (Revised 03/2014)

(A) **SPECIAL EXPERIENCE REQUIREMENTS FOR THE BIDDER:** The Special Experience Requirements set forth below apply to the bidder. Compliance with such Special Experience Requirements will be determined solely by the City prior to an award of contract. Failure to comply with the Special Experience Requirements will result in rejection of the bid as non-responsive.

The requirements in this Section (A) apply to this contract where indicated by a blackened box (■).

■ The bidder must, within the last seven (7) consecutive years prior to the bid opening, have successfully completed in a timely fashion at least one (1) project similar in scope and type to the required work. Such prior project may have been performed as a prime contractor, subcontractor or sub-subcontractor.

The Special Experience Requirements next to the blackened box below apply to the bidder. If the bidder intends to perform such work itself, it must demonstrate compliance with the Special Experience Requirements. If the bidder intends to subcontract this work, the proposed subcontractor or sub-subcontractor must demonstrate compliance with the Special Experience Requirements. The contractor, subcontractor or sub-subcontractor (hereinafter referred to as the "entity") that will perform any specific area of work indicated by the blackened box below, may have performed the required prior project(s) as a prime contractor, subcontractor or sub-subcontractor. Once approved, no substitution will be permitted, unless the qualifications of the proposed replacement have been approved in writing in advance by the City.

■ **Trunk Water Main Work:** The entity that will perform the trunk water main work must, within the last seven (7) consecutive years prior to the bid opening, have successfully completed in a timely fashion at least one (1) project similar in scope and type to the required work.

☐ **Best Management Practice Work:** Best Management Practice ("BMP") Work is any item of work in the Bid Schedule that begins with the prefix "BMP". The entity that will perform any BMP Work must, within the last five (5) consecutive years prior to the bid opening, have successfully completed in a timely fashion at least three (3) projects similar in scope and type to the required work.

For professional services in connection with BMP Work, (i.e., monitoring and reporting services), the individual who will perform the required services must, within the last five (5) consecutive years prior to the bid opening, have successfully completed in a timely fashion at least three (3) projects similar in scope and type to the required work. Additional requirements are set forth below.

☐ The individual serving as the Restoration Specialist (Construction Monitor) must be a Registered Landscape Architect licensed by the state of New York, or must have equivalent professional experience.

☐ The individual serving as the Erosion and Sediment Control Licensed/Certified Professional must be a Certified Professional in Erosion and Sediment Control (CPESC), certified by CPESC, Inc.

☐ **Micro-Tunneling/Pipe Jacking Work:** The entity that will perform the micro-tunneling/pipe jacking work must, within the last five (5) consecutive years prior to the bid opening, have successfully completed in a timely fashion at least two (2) projects similar in scope and type to the required work.

☐ **OTHER:** _____

_____

(B) SPECIAL EXPERIENCE REQUIREMENTS FOR SPECIFIC AREAS OF WORK (to be provided after an award of contract):

The requirements in this Section (B) apply to this contract where indicated by a blackened box (■).

The Special Experience Requirements set forth below apply to the contractor, subcontractor or sub-subcontractor that will perform the specific area of work. **Compliance with such Special Experience Requirements will be determined solely by the City after an award of contract.** After an award of contract, when requested by the City, the contractor will be required to submit the qualifications of the contractor, subcontractor or sub-subcontractor that will perform the specific area of work. If the bidder intends to perform such work itself, it must demonstrate compliance with the Special Experience Requirements. If the bidder intends to subcontract this work, the proposed subcontractor or sub-subcontractor must demonstrate compliance with the Special Experience Requirements. Once approved, no substitution will be permitted, unless the qualifications of the proposed replacement have been approved in writing in advance by the City.

Special Experience Requirements apply to the contractor, subcontractor or sub-subcontractor (hereinafter referred to as the "entity") that will perform any specific area of work indicated by a blackened box. The entity may have performed the required prior project(s) as a prime contractor, subcontractor or sub-subcontractor.

☐ **Hazmat Work:** Hazmat Work is any item of work in the Bid Schedule that begins with the prefix 8.01. The entity that will perform any Hazmat Work must, within the last three (3) consecutive years prior to the bid opening, have successfully completed in a timely fashion at least five (5) projects similar in scope and type to the required work.

■ **Pile, CFA Pile, and/or Mini-Pile Work:** The entity that will perform the Pile, CFA Pile and/or Mini-Pile Work must, within the last three (3) consecutive years prior to the bid opening, have successfully completed in a timely fashion at least two (2) projects similar in scope and type to the required work.

For professional services in connection with Pile Work, (i.e., engineering and inspection services), the individual who will perform the required services must be a Professional Engineer licensed by the state of New York. Such individual must also comply with the above requirements for prior projects.

■ **Construction Report, Monitoring And Post-Construction Report, and Continuous Real-Time Monitoring For Vibrations And Movements And Post-Construction Report Work:** The entity that will perform the Construction Report, Monitoring For Vibrations And Movements, and Post-Construction Report Work must, within the last three (3) consecutive years prior to the bid opening, have successfully completed in a timely fashion at least two (2) projects similar in scope and type to the required work.

For professional services in connection with Reporting and Monitoring Work, (i.e., engineering and inspection services), the individual who will perform the required services must be a Professional Engineer licensed by the state of New York. Such individual must also comply with the above requirements for prior projects.

☐ **OTHER:**_____

_____

(C) **SPECIFICATIONS:** In the event of any conflict, omission or inconsistency between (1) the Specifications and/or Contract Drawings, and (2) the Special Experience Requirements in Section (B) of the Special Notice To Bidders, the special experience listed in the Specifications and/or Contract Drawings shall be controlling. The Special Experience Requirements in Section (B) of this Special Notice To Bidders are only for the convenience of the bidders.

(D) **SUBMISSION REQUIREMENTS:** For each project submitted to demonstrate compliance with the Special Experience Requirements, the bidder must complete and submit the Qualification Form included in the Bid Booklet. The City will only evaluate a project if the following criteria are met: (1) the project is described on the Qualification Form, and (2) all information on the Qualification Form is provided. The City will not evaluate any project which does not comply with the criteria set forth herein, including any project which is referred to only on the resume of an individual.

If Special Experience Requirements are indicated for any specific area of work, the submission requirement set forth above shall apply to the entity that will perform the specific area of work.

(E) **CONDITIONS**: In determining compliance with the Special Experience Requirements for the bidder set forth above, the City may consider prior projects completed by principal(s) or other employees of the bidder while affiliated with another entity, subject to the conditions set forth below.

- Any principal or other employee on whose prior experience the bidder is relying to demonstrate compliance with this special experience requirement must have held the following: (a) a significant management role in the prior entity with which he/she was affiliated, and (b) a significant management role in the entity submitting the bid for a period of six (6) months or more from the inception of the bidding entity.

- The bidder may not rely on the experience of its principals or other employees to demonstrate compliance with any other requirements, including without limitation, financial requirements or requirements for a specified minimum amount of annual gross revenues.

(F) **JOINT VENTURES**: In the event the bidder is a joint venture, at least one firm in the joint venture must meet the above described experience requirements.

Qualification Form

List previous projects completed to meet the special experience requirements for this contract. Please photocopy this form for submission of all required projects.

Name of Contractor: _____

Name of Project: _____

Location of Project: _____

Owner or Owner's representative (Architect or Engineer) who is familiar with the work performed:

Name: _____
Title: _____ Phone Number: _____

Brief description of the Project completed or the Project in progress: _____
_____
_____

Was the Project performed as a prime, a subcontractor or a sub-subcontractor: _____

Amount of Contract, Subcontract or Sub-subcontract: _____

Start Date and Completion Date: _____

****

Name of Contractor: _____

Name of Project: _____

Location of Project: _____

Owner or Owner's representative (Architect or Engineer) who is familiar with the work performed:

Name: _____
Title: _____ Phone Number: _____

Brief description of the Project completed or the Project in progress: _____
_____
_____

Was the Project performed as a prime, a subcontractor or a sub-subcontractor: _____

Amount of Contract, Subcontract or Sub-subcontract: _____

Start Date and Completion Date: _____

(NO TEXT ON THIS PAGE)

ATTACHMENT 1 - BID INFORMATION

PROJECT ID: QED1007
PIN: 8502014WM0013C

Description and Location of Work: For The Construction Of Trunk And Distribution Water Mains In Arverne Boulevard Between Beach 59th Street And Beach 54th Street; Rockaway Beach Boulevard Between Beach 54th Street And Beach 49th Street; Beach 67th Street Between Rockaway Freeway And Rockaway Beach Boulevard; Rockaway Beach Boulevard Between Beach 54th Street And Beach 53rd Street; And Rockaway Beach Boulevard Between Beach 52nd Street And Beach 49th Street Including Storm And Sanitary Sewer Work, Together With All Work Incidental Thereto, Borough Of Queens.

Documents Available At:
30-30 Thomson Avenue
First Floor Bid Procurement Room
Long Island City, New York 11101
8:30 A.M. to 4:00 P.M. - Monday through Friday

Submission of Bids To:
30-30 Thomson Avenue
First Floor Bid Procurement Room
Long Island City, New York 11101
Before 11:00 A.M. on October 20, 2015

Bid Opening:
30-30 Thomson Avenue
First Floor Bid Procurement Room
Long Island City, New York 11101

Time and Date: 11:00 A.M. on October 20, 2015

Pre-Bid Conference: Yes _____ No X

If Yes, Mandatory: _____ Optional: _____
Time and Date: _____
Location: _____

Bid Security: Bid Security is required in the amount set forth below; provided, however, bid security is not required if the TOTAL BID PRICE set forth on the Bid Form is less than $1,000,000.00.

(1) Bond in an amount not less than 10% of the TOTAL BID PRICE set forth on the Bid Form, OR
(2) Certified Check in an amount not less than 2% of the TOTAL BID PRICE set forth on the Bid Form.

Performance and Payment Security: Required for contracts in the amount of $1,000,000 or more. Performance Security and Payment Security shall each be in an amount equal to 100% of the Contract Price.

Agency Contact Person:
Lorraine Holley
Phone: 718-391-2601 FAX: 718-391-2615

(NO TEXT ON THIS PAGE)

BID SCHEDULE

NOTICE TO BIDDERS

Items listed in this Bid Schedule which have one (1) digit followed by a decimal (e.g. 4.02 AG), excluding items beginning with the number "8.01", shall comply with the requirements of the corresponding numerical Sections of the NYCDOT Standard Highway Specifications as amended by Addendum No. 1 and Addendum No. 2, herein Volume 3 of 3.

Items listed in this Bid Schedule which have two (2) digits beginning with the number "5" followed by a decimal (e.g. 50.31CC15) shall comply with the requirements of the New York City Department of Environmental Protection (NYCDEP) Standard Sewer and Water Main Specifications dated July 1, 2014, as amended by Addendum No. 2, herein Volume 3 of 3.

Items listed in this Bid Schedule which have two (2) digits beginning with the number "6" followed by a decimal (e.g. 60.11R612) shall comply with the requirements of the New York City Department of Environmental Protection (NYCDEP) Standard Sewer and Water Main Specifications dated July 1, 2014, as amended by Addendum No. 2, herein Volume 3 of 3.

Items listed in this Bid Schedule which have two (2) digits beginning with the number "7" followed by a decimal (e.g. 70.31FN) shall comply with the requirements of the New York City Department of Environmental Protection (NYCDEP) Standard Sewer and Water Main Specifications dated July 1, 2014, as amended by Addendum No. 2, herein Volume 3 of 3.

Items listed in this Bid Schedule beginning with the prefix "UTL-" (e.g. UTL-6.01.8) are for Gas Cost Sharing (EP-7) work and shall comply with the requirements of Addendum No. 3, herein Volume 3 of 3.

(NO TEXT ON THIS PAGE)

BID SCHEDULE

NOTE: (1) The Agency may reject a bid if it contains unbalanced bid prices. An unbalanced bid is considered to be one containing lump sum or unit items which do not reflect reasonable actual costs plus a reasonable proportionate share of the Bidder's anticipated profit, overhead costs, and other indirect costs, anticipated for the performance of the items in question.

(2) The following bid prices on Unit Price Contracts are to be paid for the actual quantities of the item numbers in the completed work or structure, and they cover the cost of all work, labor, material, tools, plant and appliances of every description necessary to complete the entire work, as specified, and the removal of all debris, temporary work and appliances.

(3) PLEASE BE SURE A LEGIBLE BID IS ENTERED, IN INK, FOR EACH ITEM.
Alterations must be initialed in ink by the bidder.

(4) The Extended Amount entered in Column 6 shall be the product of the Estimated Quantity in Column 3 times the Unit Price Bid in Column 5.

(5) Prospective bidders must examine the Bid Schedule carefully and, before bidding, must advise the Commissioner, in writing, if any pages are missing, and must request that such missing pages be furnished them. The pages of this Bid Schedule are numbered consecutively, as follows:
B - 3 Through B - 28

PLEASE BE SURE A LEGIBLE BID IS ENTERED FOR EACH ITEM.
THE BIDDER SHALL INSERT THE TOTAL BID PRICE IN
THE BID FORM ON PAGE C-4 OF THIS BID BOOKLET.

NEW YORK CITY DEPARTMENT OF DESIGN AND CONSTRUCTION
DIVISION OF INFRASTRUCTURE - BUREAU OF DESIGN

PROJECT ID: QED1007
CONTRACT PIN: 8502014WM0013C

BID SCHEDULE FORM

COL. 1	COL. 2	COL. 3	COL. 4	COL. 5 UNIT PRICE (IN FIGURES)		COL. 6 EXTENDED AMOUNT (IN FIGURES)	
SEQ. NO	ITEM NUMBER and DESCRIPTION	ENGINEER'S ESTIMATE OF QUANTITIY	UNIT	DOLLARS	CTS	DOLLARS	CTS
001	4.02 AF-R ASPHALTIC CONCRETE WEARING COURSE, 2" THICK	9,800.00	S.Y.				
002	4.02 AG ASPHALTIC CONCRETE WEARING COURSE, 3" THICK	750.00	S.Y.				
003	4.02 CA BINDER MIXTURE	2,265.00	TONS				
004	4.04 AC CONCRETE BASE FOR PAVEMENT, 6" THICK, CLASS B-32	125.00	C.Y.				
005	4.04 H CONCRETE BASE FOR PAVEMENT, VARIABLE THICKNESS FOR TRENCH RESTORATION, (HIGH-EARLY STRENGTH)	30.00	C.Y.				
006	4.08 AA CONCRETE CURB (18" DEEP)	150.00	L.F.				

NEW YORK CITY DEPARTMENT OF DESIGN AND CONSTRUCTION
DIVISION OF INFRASTRUCTURE - BUREAU OF DESIGN

PROJECT ID: QED1007
CONTRACT PIN: 8502014WM0013C

BID SCHEDULE FORM

COL. 1	COL. 2	COL. 3	COL. 4	COL. 5 UNIT PRICE (IN FIGURES)		COL. 6 EXTENDED AMOUNT (IN FIGURES)	
SEQ. NO	ITEM NUMBER and DESCRIPTION	ENGINEER'S ESTIMATE OF QUANTITIY	UNIT	DOLLARS	CTS	DOLLARS	CTS
007	4.09 AD STRAIGHT STEEL FACED CONCRETE CURB (18" DEEP)	360.00	L.F.				
008	4.09 CD CORNER STEEL FACED CONCRETE CURB (18" DEEP)	240.00	L.F.				
009	4.13 AAS 4" CONCRETE SIDEWALK (UNPIGMENTED)	1,680.00	S.F.				
010	4.13 BAS 7" CONCRETE SIDEWALK (UNPIGMENTED)	1,350.00	S.F.				
011	4.13 DE EMBEDDED PREFORMED DETECTABLE WARNING UNITS	192.00	S.F.				
012	4.18 A MAINTENANCE TREE PRUNING (UNDER 12" CAL.)	51.00	EACH				

NEW YORK CITY DEPARTMENT OF DESIGN AND CONSTRUCTION
DIVISION OF INFRASTRUCTURE - BUREAU OF DESIGN

PROJECT ID: QED1007
CONTRACT PIN: 8502014WM0013C

BID SCHEDULE FORM

COL. 1 SEQ. NO	COL. 2 ITEM NUMBER and DESCRIPTION	COL. 3 ENGINEER'S ESTIMATE OF QUANTITIY	COL. 4 UNIT	COL. 5 UNIT PRICE (IN FIGURES) DOLLARS	CTS	COL. 6 EXTENDED AMOUNT (IN FIGURES) DOLLARS	CTS
013	**4.18 B** MAINTENANCE TREE PRUNING (12" TO UNDER 18" CAL.)	14.00	EACH				
014	**4.18 C** MAINTENANCE TREE PRUNING (18" TO UNDER 24" CAL.)	5.00	EACH				
015	**4.21** TREE CONSULTANT	140.00	P/HR				
016	**50.21M3E024D** 24" R.C.P. CLASS III STORM SEWER, ENCASED IN CONCRETE	30.00	L.F.				
017	**50.31ME12** 12" E.S.V.P. STORM SEWER, ENCASED IN CONCRETE	30.00	L.F.				
018	**50.31SC10** 10" E.S.V.P. SANITARY SEWER, ON CONCRETE CRADLE	170.00	L.F.				

NEW YORK CITY DEPARTMENT OF DESIGN AND CONSTRUCTION
DIVISION OF INFRASTRUCTURE - BUREAU OF DESIGN

PROJECT ID: QED1007
CONTRACT PIN: 8502014WM0013C

BID SCHEDULE FORM

COL. 1	COL. 2	COL. 3	COL. 4	COL. 5 UNIT PRICE (IN FIGURES)		COL. 6 EXTENDED AMOUNT (IN FIGURES)	
SEQ. NO	ITEM NUMBER and DESCRIPTION	ENGINEER'S ESTIMATE OF QUANTITIY	UNIT	DOLLARS	CTS	DOLLARS	CTS
019	**50.31SE12** 12" E.S.V.P. SANITARY SEWER, ENCASED IN CONCRETE	30.00	L.F.				
020	**50.41M6E12** 12" D.I.P. CLASS 56 STORM SEWER, ENCASED IN CONCRETE	30.00	L.F.				
021	**50.41M6E20** 20" D.I.P. CLASS 56 STORM SEWER, ENCASED IN CONCRETE	265.00	L.F.				
022	**51.11C000** CHAMBER	1.00	EACH				
023	**51.21S0A3000V** STANDARD SHALLOW MANHOLE TYPE A-3	3.00	EACH				
024	**51.21S0B1000V** STANDARD MANHOLE TYPE B-1	4.00	EACH				

NEW YORK CITY DEPARTMENT OF DESIGN AND CONSTRUCTION
DIVISION OF INFRASTRUCTURE - BUREAU OF DESIGN

PROJECT ID: QED1007
CONTRACT PIN: 8502014WM0013C

BID SCHEDULE FORM

COL. 1	COL. 2	COL. 3	COL. 4	COL. 5 UNIT PRICE (IN FIGURES)		COL. 6 EXTENDED AMOUNT (IN FIGURES)	
SEQ. NO	ITEM NUMBER and DESCRIPTION	ENGINEER'S ESTIMATE OF QUANTITIY	UNIT	DOLLARS	CTS	DOLLARS	CTS
025	51.21W000000V SPECIAL SHALLOW MANHOLE	1.00	EACH				
026	51.23RF REPLACEMENT OF EXISTING MANHOLE FRAME AND COVER	13.00	EACH				
027	51.41S001 STANDARD CATCH BASIN, TYPE 1	21.00	EACH				
028	52.11D12 12" DUCTILE IRON PIPE BASIN CONNECTION	540.00	L.F.				
029	52.21V08 8" E.S.V.P. RISER FOR HOUSE CONNECTION	10.00	V.F.				
030	52.31V06S10 6" E.S.V.P. SPUR FOR HOUSE CONNECTION ON 10" E.S.V.P. SANITARY SEWER	2.00	EACH				

NEW YORK CITY DEPARTMENT OF DESIGN AND CONSTRUCTION
DIVISION OF INFRASTRUCTURE - BUREAU OF DESIGN

PROJECT ID: QED1007
CONTRACT PIN: 8502014WM0013C

BID SCHEDULE FORM

COL. 1	COL. 2	COL. 3	COL. 4	COL. 5		COL. 6	
		ENGINEER'S ESTIMATE		UNIT PRICE (IN FIGURES)		EXTENDED AMOUNT (IN FIGURES)	
SEQ. NO	ITEM NUMBER and DESCRIPTION	OF QUANTITIY	UNIT	DOLLARS	CTS	DOLLARS	CTS
031	**52.31V06S12** 6" E.S.V.P. SPUR FOR HOUSE CONNECTION ON 12" E.S.V.P. SANITARY SEWER	4.00	EACH				
032	**52.41V06R** 6" E.S.V.P. HOUSE CONNECTION DRAIN ON CONCRETE CRADLE (RECONNECTION)	36.00	L.F.				
033	**53.11DR** TELEVISION INSPECTION AND DIGITAL AUDIO-VISUAL RECORDING OF SEWERS	985.00	L.F.				
034	**6.02 AAN** UNCLASSIFIED EXCAVATION	1,565.00	C.Y.				
035	**6.02 XHEC** INCREMENTAL COST FOR MODIFYING WORK METHODS NEAR (WITHIN 3 FEET OF) TRANSIT FACILITIES AND BUILDING VAULTS	25.00	C.Y.				
036	**6.02 XSCW** INCREMENTAL COST FOR USING SPECIAL CARE WORK METHODS NEAR (FROM 3 FEET TO 50 FEET) TRANSIT FACILITIES	25.00	C.Y.				

NEW YORK CITY DEPARTMENT OF DESIGN AND CONSTRUCTION
DIVISION OF INFRASTRUCTURE - BUREAU OF DESIGN

PROJECT ID: QED1007
CONTRACT PIN: 8502014WM0013C

BID SCHEDULE FORM

COL. 1	COL. 2	COL. 3	COL. 4	COL. 5 UNIT PRICE (IN FIGURES)		COL. 6 EXTENDED AMOUNT (IN FIGURES)	
SEQ. NO	ITEM NUMBER and DESCRIPTION	ENGINEER'S ESTIMATE OF QUANTITIY	UNIT	DOLLARS	CTS	DOLLARS	CTS
037	6.25 RS TEMPORARY SIGNS	2,150.00	S.F.				
038	6.26 TIMBER CURB	8,610.00	L.F.				
039	6.28 AA LIGHTED TIMBER BARRICADES	2,250.00	L.F.				
040	6.40 C ENGINEER'S FIELD OFFICE (TYPE C)	18.00	MONTH				
041	6.44 THERMOPLASTIC REFLECTORIZED PAVEMENT MARKINGS (4" WIDE)	16,600.00	L.F.				
042	6.49 TEMPORARY PAVEMENT MARKINGS (4" WIDE)	4,200.00	L.F.				

NEW YORK CITY DEPARTMENT OF DESIGN AND CONSTRUCTION
DIVISION OF INFRASTRUCTURE - BUREAU OF DESIGN

PROJECT ID: QED1007
CONTRACT PIN: 8502014WM0013C

BID SCHEDULE FORM

COL. 1	COL. 2	COL. 3	COL. 4	COL. 5 UNIT PRICE (IN FIGURES)		COL. 6 EXTENDED AMOUNT (IN FIGURES)	
SEQ. NO	ITEM NUMBER and DESCRIPTION	ENGINEER'S ESTIMATE OF QUANTITIY	UNIT	DOLLARS	CTS	DOLLARS	CTS
043	6.50 CLEANING OF DRAINAGE STRUCTURES	4.00	EACH				
044	6.52 CG CROSSING GUARD	875.00	P/HR				
045	6.53 REMOVE EXISTING LANE MARKINGS (4" WIDE)	4,200.00	L.F.				
046	6.87 PLASTIC BARRELS	2,180.00	EACH				
047	60.11R520 FURNISHING AND DELIVERING 20-INCH DUCTILE IRON RESTRAINED JOINT PIPE (CLASS 55)	40.00	L.F.				
048	60.11R536 FURNISHING AND DELIVERING 36-INCH DUCTILE IRON RESTRAINED JOINT PIPE (CLASS 55)	10.00	L.F.				

NEW YORK CITY DEPARTMENT OF DESIGN AND CONSTRUCTION
DIVISION OF INFRASTRUCTURE - BUREAU OF DESIGN

PROJECT ID: QED1007
CONTRACT PIN: 8502014WM0013C

BID SCHEDULE FORM

COL. 1	COL. 2	COL. 3	COL. 4	COL. 5 UNIT PRICE (IN FIGURES)		COL. 6 EXTENDED AMOUNT (IN FIGURES)	
SEQ. NO	ITEM NUMBER and DESCRIPTION	ENGINEER'S ESTIMATE OF QUANTITIY	UNIT	DOLLARS	CTS	DOLLARS	CTS
049	**60.11R606** FURNISHING AND DELIVERING 6-INCH DUCTILE IRON RESTRAINED JOINT PIPE (CLASS 56)	250.00	L.F.				
050	**60.11R608** FURNISHING AND DELIVERING 8-INCH DUCTILE IRON RESTRAINED JOINT PIPE (CLASS 56)	160.00	L.F.				
051	**60.11R612** FURNISHING AND DELIVERING 12-INCH DUCTILE IRON RESTRAINED JOINT PIPE (CLASS 56)	3,355.00	L.F.				
052	**60.12D06** LAYING 6-INCH DUCTILE IRON PIPE AND FITTINGS	295.00	L.F.				
053	**60.12D08** LAYING 8-INCH DUCTILE IRON PIPE AND FITTINGS	175.00	L.F.				
054	**60.12D12** LAYING 12-INCH DUCTILE IRON PIPE AND FITTINGS	3,580.00	L.F.				

NEW YORK CITY DEPARTMENT OF DESIGN AND CONSTRUCTION
DIVISION OF INFRASTRUCTURE - BUREAU OF DESIGN

PROJECT ID: QED1007
CONTRACT PIN: 8502014WM0013C

BID SCHEDULE FORM

COL. 1	COL. 2	COL. 3	COL. 4	COL. 5 UNIT PRICE (IN FIGURES)		COL. 6 EXTENDED AMOUNT (IN FIGURES)	
SEQ. NO	ITEM NUMBER and DESCRIPTION	ENGINEER'S ESTIMATE OF QUANTITIY	UNIT	DOLLARS	CTS	DOLLARS	CTS
055	**60.12D20** LAYING 20-INCH DUCTILE IRON PIPE AND FITTINGS	50.00	L.F.				
056	**60.12D36** LAYING 36-INCH DUCTILE IRON PIPE AND FITTINGS	15.00	L.F.				
057	**60.13M0A24** FURNISHING AND DELIVERING DUCTILE IRON MECHANICAL JOINT 24 -INCH DIAMETER AND SMALLER FITTINGS, INCLUDING WEDGE TYPE RETAINER GLANDS	13.00	TONS				
058	**60.13M5S36** FURNISHING AND DELIVERING 36-INCH DUCTILE IRON MECHANICAL JOINT SLEEVES (CLASS 55)	1.00	EACH				
059	**60.18BJC20EL** FURNISHING, DELIVERING AND INSTALLING BELL JOINT CLAMPS, COMPLETE FOR 20-INCH PIPE AND LESS	14.00	EACH				
060	**60.21SP3T30** FURNISHING, DELIVERING AND LAYING 30-INCH STRAIGHT STEEL PIPE, 3/8-INCH WALL THICKNESS	35.00	L.F.				

NEW YORK CITY DEPARTMENT OF DESIGN AND CONSTRUCTION
DIVISION OF INFRASTRUCTURE - BUREAU OF DESIGN

PROJECT ID: QED1007
CONTRACT PIN: 8502014WM0013C

BID SCHEDULE FORM

COL. 1	COL. 2	COL. 3	COL. 4	COL. 5 UNIT PRICE (IN FIGURES)		COL. 6 EXTENDED AMOUNT (IN FIGURES)	
SEQ. NO	ITEM NUMBER and DESCRIPTION	ENGINEER'S ESTIMATE OF QUANTITIY	UNIT	DOLLARS	CTS	DOLLARS	CTS
061	**60.21SP3T36** FURNISHING, DELIVERING AND LAYING 36-INCH STRAIGHT STEEL PIPE, 3/8-INCH WALL THICKNESS	2,875.00	L.F.				
062	**60.22BR3T30** FURNISHING, DELIVERING AND LAYING 30-INCH STEEL BENDS AND REDUCERS, 3/8-INCH WALL THICKNESS	20.00	L.F.				
063	**60.22BR3T36** FURNISHING, DELIVERING AND LAYING 36-INCH STEEL BENDS AND REDUCERS, 3/8-INCH WALL THICKNESS	125.00	L.F.				
064	**60.25PSO** FURNISHING, DELIVERING AND INSTALLING PLATE STEEL OUTLETS ON STEEL PIPE, ACCESS MANHOLE OUTLETS WITH COVERS, AND NUTS AND BOLTS COMPLETE	7,000.00	LBS.				
065	**60.27RSC36** FURNISHING, DELIVERING AND INSTALLING 36-INCH DIAMETER BOLTED, SPLIT SLEEVE-TYPE RESTRAINED COUPLING	1.00	EACH				
066	**60.29CP** FURNISHING, INSTALLING AND TESTING CORROSION CONTROL AND/OR CATHODIC PROTECTION SYSTEM	1.00	L.S.				

NEW YORK CITY DEPARTMENT OF DESIGN AND CONSTRUCTION
DIVISION OF INFRASTRUCTURE - BUREAU OF DESIGN

PROJECT ID: QED1007
CONTRACT PIN: 8502014WM0013C

BID SCHEDULE FORM

COL. 1	COL. 2	COL. 3	COL. 4	COL. 5 UNIT PRICE (IN FIGURES)		COL. 6 EXTENDED AMOUNT (IN FIGURES)	
SEQ. NO	ITEM NUMBER and DESCRIPTION	ENGINEER'S ESTIMATE OF QUANTITIY	UNIT	DOLLARS	CTS	DOLLARS	CTS
067	**61.11DFM06** FURNISHING AND DELIVERING 6-INCH FLANGED-MECHANICAL JOINT DUCTILE IRON GATE VALVE COMPLETE WITH WEDGE TYPE RETAINER GLAND	4.00	EACH				
068	**61.11DFM12** FURNISHING AND DELIVERING 12-INCH FLANGED-MECHANICAL JOINT DUCTILE IRON GATE VALVE COMPLETE WITH WEDGE TYPE RETAINER GLAND	3.00	EACH				
069	**61.11DMM06** FURNISHING AND DELIVERING 6-INCH MECHANICAL JOINT DUCTILE IRON GATE VALVE COMPLETE WITH WEDGE TYPE RETAINER GLANDS	13.00	EACH				
070	**61.11DMM08** FURNISHING AND DELIVERING 8-INCH MECHANICAL JOINT DUCTILE IRON GATE VALVE COMPLETE WITH WEDGE TYPE RETAINER GLANDS	1.00	EACH				
071	**61.11DMM12** FURNISHING AND DELIVERING 12-INCH MECHANICAL JOINT DUCTILE IRON GATE VALVE COMPLETE WITH WEDGE TYPE RETAINER GLANDS	16.00	EACH				

NEW YORK CITY DEPARTMENT OF DESIGN AND CONSTRUCTION
DIVISION OF INFRASTRUCTURE - BUREAU OF DESIGN

PROJECT ID: QED1007
CONTRACT PIN: 8502014WM0013C

BID SCHEDULE FORM

COL. 1	COL. 2	COL. 3	COL. 4	COL. 5		COL. 6	
		ENGINEER'S ESTIMATE		UNIT PRICE (IN FIGURES)		EXTENDED AMOUNT (IN FIGURES)	
SEQ. NO	ITEM NUMBER and DESCRIPTION	OF QUANTITIY	UNIT	DOLLARS	CTS	DOLLARS	CTS
072	**61.11DMM20** FURNISHING AND DELIVERING 20-INCH MECHANICAL JOINT DUCTILE IRON GATE VALVE COMPLETE WITH WEDGE TYPE RETAINER GLANDS	1.00	EACH				
073	**61.11TWC03** FURNISHING AND DELIVERING 3-INCH WET CONNECTION TAPPING VALVE COMPLETE WITH WEDGE TYPE RETAINER GLANDS	3.00	EACH				
074	**61.11TWC04** FURNISHING AND DELIVERING 4-INCH WET CONNECTION TAPPING VALVE COMPLETE WITH WEDGE TYPE RETAINER GLANDS	3.00	EACH				
075	**61.11TWC06** FURNISHING AND DELIVERING 6-INCH WET CONNECTION TAPPING VALVE COMPLETE WITH WEDGE TYPE RETAINER GLANDS	4.00	EACH				
076	**61.12DFM06** SETTING 6-INCH FLANGED-MECHANICAL JOINT DUCTILE IRON GATE VALVE COMPLETE WITH WEDGE TYPE RETAINER GLAND	4.00	EACH				
077	**61.12DFM12** SETTING 12-INCH FLANGED-MECHANICAL JOINT DUCTILE IRON GATE VALVE COMPLETE WITH WEDGE TYPE RETAINER GLAND	3.00	EACH				

NEW YORK CITY DEPARTMENT OF DESIGN AND CONSTRUCTION
DIVISION OF INFRASTRUCTURE - BUREAU OF DESIGN

PROJECT ID: QED1007
CONTRACT PIN: 8502014WM0013C

BID SCHEDULE FORM

COL. 1	COL. 2	COL. 3	COL. 4	COL. 5 UNIT PRICE (IN FIGURES)		COL. 6 EXTENDED AMOUNT (IN FIGURES)	
SEQ. NO	ITEM NUMBER and DESCRIPTION	ENGINEER'S ESTIMATE OF QUANTITIY	UNIT	DOLLARS	CTS	DOLLARS	CTS
078	**61.12DMM06** SETTING 6-INCH MECHANICAL JOINT DUCTILE IRON GATE VALVE COMPLETE WITH WEDGE TYPE RETAINER GLANDS	13.00	EACH				
079	**61.12DMM08** SETTING 8-INCH MECHANICAL JOINT DUCTILE IRON GATE VALVE COMPLETE WITH WEDGE TYPE RETAINER GLANDS	1.00	EACH				
080	**61.12DMM12** SETTING 12-INCH MECHANICAL JOINT DUCTILE IRON GATE VALVE COMPLETE WITH WEDGE TYPE RETAINER GLANDS	16.00	EACH				
081	**61.12DMM20** SETTING 20-INCH MECHANICAL JOINT DUCTILE IRON GATE VALVE COMPLETE WITH WEDGE TYPE RETAINER GLANDS	1.00	EACH				
082	**61.12TWC03** SETTING 3-INCH WET CONNECTION TAPPING VALVE COMPLETE WITH WEDGE TYPE RETAINER GLANDS	3.00	EACH				
083	**61.12TWC04** SETTING 4-INCH WET CONNECTION TAPPING VALVE COMPLETE WITH WEDGE TYPE RETAINER GLANDS	3.00	EACH				

NEW YORK CITY DEPARTMENT OF DESIGN AND CONSTRUCTION
DIVISION OF INFRASTRUCTURE - BUREAU OF DESIGN

PROJECT ID: QED1007
CONTRACT PIN: 8502014WM0013C

BID SCHEDULE FORM

COL. 1	COL. 2	COL. 3	COL. 4	COL. 5 UNIT PRICE (IN FIGURES)		COL. 6 EXTENDED AMOUNT (IN FIGURES)	
SEQ. NO	ITEM NUMBER and DESCRIPTION	ENGINEER'S ESTIMATE OF QUANTITIY	UNIT	DOLLARS	CTS	DOLLARS	CTS
084	**61.12TWC06** SETTING 6-INCH WET CONNECTION TAPPING VALVE COMPLETE WITH WEDGE TYPE RETAINER GLANDS	4.00	EACH				
085	**61.21BVB36** FURNISHING, DELIVERING AND INSTALLING 36-INCH BUTTERFLY VALVE WITH BY-PASS ARRANGEMENT AND OUTLET, COMPLETE	1.00	EACH				
086	**61.21EJB36** FURNISHING, DELIVERING AND INSTALLING 36-INCH EXPANSION JOINT FOR BUTTERFLY VALVE INCLUDING 6-INCH BY-PASS OUTLET	1.00	EACH				
087	**61.31PV12** FURNISHING, DELIVERING AND INSTALLING 12-INCH PRESSURE REGULATOR VALVE	1.00	EACH				
088	**62.11SD** FURNISHING AND DELIVERING HYDRANTS	16.00	EACH				
089	**62.12SG** SETTING HYDRANTS COMPLETE WITH WEDGE TYPE RETAINER GLANDS	16.00	EACH				

NEW YORK CITY DEPARTMENT OF DESIGN AND CONSTRUCTION
DIVISION OF INFRASTRUCTURE - BUREAU OF DESIGN

PROJECT ID: QED1007
CONTRACT PIN: 8502014WM0013C

BID SCHEDULE FORM

COL. 1 SEQ. NO	COL. 2 ITEM NUMBER and DESCRIPTION	COL. 3 ENGINEER'S ESTIMATE OF QUANTITIY	COL. 4 UNIT	COL. 5 UNIT PRICE (IN FIGURES) DOLLARS	CTS	COL. 6 EXTENDED AMOUNT (IN FIGURES) DOLLARS	CTS
090	62.13RH REMOVING HYDRANTS	10.00	EACH				
091	62.14FS FURNISHING, DELIVERING AND INSTALLING HYDRANT FENDERS	36.00	EACH				
092	63.11MH FURNISHING, DELIVERING AND INSTALLING 36-INCH CAST IRON MANHOLE HEADS AND COVERS	7.00	TONS				
093	63.11MS FURNISHING, DELIVERING AND INSTALLING MANHOLE STEPS TYPE PS2-PF	94.00	EACH				
094	63.11VC FURNISHING AND DELIVERING VARIOUS CASTINGS	17.00	TONS				
095	64.11EL WITHDRAWING AND REPLACING HOUSE SERVICES USING 1-1/2-INCH OR LARGER SCREW TAPS	2.00	EACH				

NEW YORK CITY DEPARTMENT OF DESIGN AND CONSTRUCTION
DIVISION OF INFRASTRUCTURE - BUREAU OF DESIGN

PROJECT ID: QED1007
CONTRACT PIN: 8502014WM0013C

BID SCHEDULE FORM

COL. 1	COL. 2	COL. 3	COL. 4	COL. 5 UNIT PRICE (IN FIGURES)		COL. 6 EXTENDED AMOUNT (IN FIGURES)	
SEQ. NO	ITEM NUMBER and DESCRIPTION	ENGINEER'S ESTIMATE OF QUANTITIY	UNIT	DOLLARS	CTS	DOLLARS	CTS
096	**64.11ST** WITHDRAWING AND REPLACING HOUSE SERVICES USING SMALLER THAN 1-1/2-INCH SCREW TAPS	12.00	EACH				
097	**64.12COEG** CUTTING AND OFFSETTING HOUSE SERVICE WATER CONNECTIONS (EQUAL TO OR GREATER THAN 3-INCH DIAMETER)	10.00	L.F.				
098	**64.12COLT** CUTTING AND OFFSETTING HOUSE SERVICE WATER CONNECTIONS (LESS THAN 3-INCH DIAMETER)	10.00	L.F.				
099	**64.12ESEG** EXTENDING HOUSE SERVICE WATER CONNECTIONS (EQUAL TO OR GREATER THAN 3-INCH DIAMETER)	210.00	L.F.				
100	**64.12ESLT** EXTENDING HOUSE SERVICE WATER CONNECTIONS (LESS THAN 3-INCH DIAMETER)	30.00	L.F.				
101	**64.13WC08** FURNISHING, DELIVERING AND INSTALLING WET CONNECTION SLEEVE ON 8-INCH WATER MAIN PIPE WITH VARIOUS OUTLETS	1.00	EACH				

NEW YORK CITY DEPARTMENT OF DESIGN AND CONSTRUCTION
DIVISION OF INFRASTRUCTURE - BUREAU OF DESIGN

PROJECT ID: QED1007
CONTRACT PIN: 8502014WM0013C

BID SCHEDULE FORM

COL. 1	COL. 2	COL. 3	COL. 4	COL. 5 UNIT PRICE (IN FIGURES)		COL. 6 EXTENDED AMOUNT (IN FIGURES)	
SEQ. NO	ITEM NUMBER and DESCRIPTION	ENGINEER'S ESTIMATE OF QUANTITIY	UNIT	DOLLARS	CTS	DOLLARS	CTS
102	**64.13WC12** FURNISHING, DELIVERING AND INSTALLING WET CONNECTION SLEEVE ON 12-INCH WATER MAIN PIPE WITH VARIOUS OUTLETS	9.00	EACH				
103	**65.11BR** FURNISHING, DELIVERING AND INSTALLING BANDS, RODS, WASHERS, ETC., COMPLETE, FOR RESTRAINING JOINTS	5,100.00	LBS.				
104	**65.21PS** FURNISHING AND PLACING POLYETHYLENE SLEEVE **Unit price bid shall not be less than: $ 0.50**	3,500.00	L.F.				
105	**65.31FF** FURNISHING, DELIVERING AND PLACING FILTER FABRIC **Unit price bid shall not be less than: $ 0.10**	68,800.00	S.F.				
106	**65.41PS06** FURNISHING, DELIVERING AND INSTALLING 6-INCH PIPE-TO-WALL PENETRATION SEAL, INCLUDING STEEL SLEEVE AND ANCHOR/WATER STOP PLATE	2.00	EACH				

NEW YORK CITY DEPARTMENT OF DESIGN AND CONSTRUCTION
DIVISION OF INFRASTRUCTURE - BUREAU OF DESIGN

PROJECT ID: QED1007
CONTRACT PIN: 8502014WM0013C

BID SCHEDULE FORM

COL. 1	COL. 2	COL. 3	COL. 4	COL. 5		COL. 6	
		ENGINEER'S ESTIMATE		UNIT PRICE (IN FIGURES)		EXTENDED AMOUNT (IN FIGURES)	
SEQ. NO	ITEM NUMBER and DESCRIPTION	OF QUANTITIY	UNIT	DOLLARS	CTS	DOLLARS	CTS
107	**65.41PS12** FURNISHING, DELIVERING AND INSTALLING 12-INCH PIPE-TO-WALL PENETRATION SEAL, INCLUDING STEEL SLEEVE AND ANCHOR/WATER STOP PLATE	4.00	EACH				
108	**65.41PS36** FURNISHING, DELIVERING AND INSTALLING 36-INCH PIPE-TO-WALL PENETRATION SEAL, INCLUDING STEEL SLEEVE AND ANCHOR/WATER STOP PLATE	4.00	EACH				
109	**65.51PC** FURNISHING AND PLACING CAST-IN-PLACE CONCRETE CLASS 40 AND PRECAST CONCRETE CLASS 50	125.00	C.Y.				
110	**65.61SS** FURNISHING, DELIVERING AND PLACING STRUCTURAL, REINFORCING AND MISCELLANEOUS STEEL	14,450.00	LBS.				
111	**65.71SG** FURNISHING, DELIVERING AND PLACING SCREENED GRAVEL OR SCREENED BROKEN STONE BEDDING	875.00	C.Y.				

NEW YORK CITY DEPARTMENT OF DESIGN AND CONSTRUCTION
DIVISION OF INFRASTRUCTURE - BUREAU OF DESIGN

PROJECT ID: QED1007
CONTRACT PIN: 8502014WM0013C

BID SCHEDULE FORM

COL. 1 SEQ. NO	COL. 2 ITEM NUMBER and DESCRIPTION	COL. 3 ENGINEER'S ESTIMATE OF QUANTITIY	COL. 4 UNIT	COL. 5 UNIT PRICE (IN FIGURES) DOLLARS	CTS	COL. 6 EXTENDED AMOUNT (IN FIGURES) DOLLARS	CTS
112	7.13 B MAINTENANCE OF SITE **Unit price bid shall not be less than: $ 8,000.00**	12.00	MONTH				
113	7.36 PEDESTRIAN STEEL BARRICADES	7,650.00	L.F.				
114	7.88 AA RODENT INFESTATION SURVEY AND MONITORING **Unit price bid shall not be less than: $ 3,500.00**	1.00	L.S.				
115	7.88 AB RODENT BAIT STATIONS **Unit price bid shall not be less than: $ 60.00**	115.00	EACH				
116	7.88 AC BAITING OF RODENT BAIT STATIONS **Unit price bid shall not be less than: $ 9.25**	115.00	EACH				
117	7.88 AD WATERBUG BAIT APPLICATIONS **Unit price bid shall not be less than: $ 65.00**	250.00	BLOCK				

NEW YORK CITY DEPARTMENT OF DESIGN AND CONSTRUCTION
DIVISION OF INFRASTRUCTURE - BUREAU OF DESIGN

PROJECT ID: QED1007
CONTRACT PIN: 8502014WM0013C

BID SCHEDULE FORM

COL. 1	COL. 2	COL. 3	COL. 4	COL. 5 UNIT PRICE (IN FIGURES)		COL. 6 EXTENDED AMOUNT (IN FIGURES)	
SEQ. NO	ITEM NUMBER and DESCRIPTION	ENGINEER'S ESTIMATE OF QUANTITIY	UNIT	DOLLARS	CTS	DOLLARS	CTS
118	70.11TT TIMBER PILES (TREATED) **Unit price bid shall not be less than: $ 17.50**	20,040.00	V.F.				
119	70.21DK DECKING	775.00	S.Y.				
120	70.31FN FENCING **Unit price bid shall not be less than: $ 2.00**	16,400.00	L.F.				
121	70.51EO EXCAVATION OF BOULDERS IN OPEN CUT **Unit price bid shall not be less than: $ 75.00**	40.00	C.Y.				
122	70.71SB STONE BALLAST **Unit price bid shall not be less than: $ 15.00**	285.00	C.Y.				
123	70.81CB CLEAN BACKFILL **Unit price bid shall not be less than: $ 15.00**	2,075.00	C.Y.				

NEW YORK CITY DEPARTMENT OF DESIGN AND CONSTRUCTION
DIVISION OF INFRASTRUCTURE - BUREAU OF DESIGN

PROJECT ID: QED1007
CONTRACT PIN: 8502014WM0013C

BID SCHEDULE FORM

COL. 1 SEQ. NO	COL. 2 ITEM NUMBER and DESCRIPTION	COL. 3 ENGINEER'S ESTIMATE OF QUANTITIY	COL. 4 UNIT	COL. 5 UNIT PRICE (IN FIGURES) DOLLARS	CTS	COL. 6 EXTENDED AMOUNT (IN FIGURES) DOLLARS	CTS
124	70.91SW12 FURNISHING AND PLACING SHEETING AND BRACING IN TRENCH FOR WATER MAIN PIPE 12-INCH IN DIAMETER AND LESS	3,100.00	S.F.				
125	70.91SW20 FURNISHING AND PLACING SHEETING AND BRACING IN TRENCH FOR WATER MAIN PIPE 20-INCH IN DIAMETER	290.00	S.F.				
126	73.11AB ADDITIONAL BRICK MASONRY **Unit price bid shall not be less than: $ 62.50**	35.00	C.Y.				
127	73.21AC ADDITIONAL CONCRETE **Unit price bid shall not be less than: $ 62.50**	185.00	C.Y.				
128	73.31AE0 ADDITIONAL EARTH EXCAVATION INCLUDING TEST PITS (ALL DEPTHS) **Unit price bid shall not be less than: $ 20.00**	60.00	C.Y.				
129	73.41AG ADDITIONAL SELECT GRANULAR BACKFILL **Unit price bid shall not be less than: $ 15.00**	55.00	C.Y.				

NEW YORK CITY DEPARTMENT OF DESIGN AND CONSTRUCTION
DIVISION OF INFRASTRUCTURE - BUREAU OF DESIGN

PROJECT ID: QED1007
CONTRACT PIN: 8502014WM0013C

BID SCHEDULE FORM

COL. 1	COL. 2	COL. 3	COL. 4	COL. 5		COL. 6	
		ENGINEER'S ESTIMATE		UNIT PRICE (IN FIGURES)		EXTENDED AMOUNT (IN FIGURES)	
SEQ. NO	ITEM NUMBER and DESCRIPTION	OF QUANTITIY	UNIT	DOLLARS	CTS	DOLLARS	CTS
130	73.51AS ADDITIONAL STEEL REINFORCING BARS **Unit price bid shall not be less than: $ 1.00**	8,970.00	LBS.				
131	76.11CR CONSTRUCTION REPORT	1.00	L.S.				
132	76.21MR MONITORING AND POST-CONSTRUCTION REPORT	1.00	L.S.				
133	UTL-6.01.1 GAS MAIN CROSSING SEWER UP TO 24" IN DIAMETER (S6.01) **Unit price bid shall not be less than: $ 1,040.00**	9.00	EACH				
134	UTL-6.01.11 GAS MAIN CROSSING WATER MAIN 36" THRU 42" IN DIAMETER (S6.01) **Unit price bid shall not be less than: $ 685.00**	6.00	EACH				
135	UTL-6.01.9 GAS MAIN CROSSING WATER MAIN UP TO 20" IN DIAMETER (S6.01) **Unit price bid shall not be less than: $ 485.00**	5.00	EACH				

NEW YORK CITY DEPARTMENT OF DESIGN AND CONSTRUCTION
DIVISION OF INFRASTRUCTURE - BUREAU OF DESIGN

PROJECT ID: QED1007
CONTRACT PIN: 8502014WM0013C

BID SCHEDULE FORM

COL. 1 SEQ. NO	COL. 2 ITEM NUMBER and DESCRIPTION	COL. 3 ENGINEER'S ESTIMATE OF QUANTITIY	COL. 4 UNIT	COL. 5 UNIT PRICE (IN FIGURES) DOLLARS	CTS	COL. 6 EXTENDED AMOUNT (IN FIGURES) DOLLARS	CTS
136	UTL-6.02 EXTRA EXCAVATION FOR THE INSTALLATION OF CATCH BASIN SEWER DRAIN PIPES WITH GAS INTERFERENCES (S6.02) **Unit price bid shall not be less than: $ 715.00**	2.00	EACH				
137	UTL-6.03 REMOVAL OF ABANDONED GAS FACILITIES. ALL SIZES. (S6.03) **Unit price bid shall not be less than: $ 15.00**	4,000.00	L.F.				
138	UTL-6.03.1 REMOVAL OF ABANDONED GAS FACILITIES WITH POSSIBLE COAL TAR WRAP. ALL SIZES. (S6.03) **Unit price bid shall not be less than: $ 25.00**	1,000.00	L.F.				
139	UTL-6.04 ADJUST HARDWARE TO GRADE USING SPACER RINGS/ADAPTORS. (STREET REPAVING.) (S6.04) **Unit price bid shall not be less than: $ 35.00**	5.00	EACH				
140	UTL-6.05 ADJUST HARDWARE TO GRADE BY RESETTING. (ROAD RECONSTRUCTION.) (S6.05) **Unit price bid shall not be less than: $ 65.00**	10.00	EACH				
141	UTL-6.06 SPECIAL CARE EXCAVATION AND BACKFILLING (S6.06) **Unit price bid shall not be less than: $ 180.00**	500.00	C.Y.				

NEW YORK CITY DEPARTMENT OF DESIGN AND CONSTRUCTION
DIVISION OF INFRASTRUCTURE - BUREAU OF DESIGN

PROJECT ID: QED1007
CONTRACT PIN: 8502014WM0013C

BID SCHEDULE FORM

COL. 1 SEQ. NO	COL. 2 ITEM NUMBER and DESCRIPTION	COL. 3 ENGINEER'S ESTIMATE OF QUANTITIY	COL. 4 UNIT	COL. 5 UNIT PRICE (IN FIGURES) DOLLARS	CTS	COL. 6 EXTENDED AMOUNT (IN FIGURES) DOLLARS	CTS
142	UTL-6.07 TEST PITS FOR GAS FACILITIES (S6.07) **Unit price bid shall not be less than: $ 100.00**	30.00	C.Y.				
143	UTL-GCS-2WS GAS INTERFERENCES AND ACCOMMODATIONS **PRICE BID SHALL BE FOR THE FIXED SUM OF $ 60,000.00**	1.00	F.S.	60,000	00	60,000	00

SUB-TOTAL: $ _____

144	6.39 A MOBILIZATION **BID PRICE OF MOBILIZATION SHALL NOT EXCEED 4% OF THE ABOVE SUB-TOTAL PRICE.**	1.00	L.S.				

TOTAL BID PRICE: $ _____

PLEASE BE SURE A LEGIBLE BID IS ENTERED FOR EACH ITEM.
THE BIDDER SHALL INSERT THE TOTAL BID PRICE IN
THE BID FORM ON PAGE C-4 OF THIS BID BOOKLET.

BID FORM
THE CITY OF NEW YORK
DEPARTMENT OF DESIGN AND CONSTRUCTION
DIVISION OF INFRASTRUCTURE

BID FOR FURNISHING ALL LABOR AND MATERIAL NECESSARY AND REQUIRED FOR:

PROJECT ID: QED1007

FOR THE CONSTRUCTION OF TRUNK AND DISTRIBUTION WATER MAINS IN ARVERNE BOULEVARD BETWEEN BEACH 59TH STREET AND BEACH 54TH STREET; ROCKAWAY BEACH BOULEVARD BETWEEN BEACH 54TH STREET AND BEACH 49TH STREET; BEACH 67TH STREET BETWEEN ROCKAWAY FREEWAY AND ROCKAWAY BEACH BOULEVARD; ROCKAWAY BEACH BOULEVARD BETWEEN BEACH 54TH STREET AND BEACH 53RD STREET; AND ROCKAWAY BEACH BOULEVARD BETWEEN BEACH 52ND STREET AND BEACH 49TH STREET

INCLUDING STORM AND SANITARY SEWER WORK

Together With All Work Incidental Thereto
BOROUGH OF QUEENS

Name of Bidder: _____

Date of Bid Opening: _____

Bidder is: (Check one, whichever applies) Individual ( ) Partnership ( ) Corporation ( )

Place of Business of Bidder: _____

Bidder's Telephone Number: _____ Fax Number: _____

Bidder's E-Mail Address: _____

Residence of Bidder (If Individual): _____

If Bidder is a Partnership, fill in the following blanks:

Names of Partners	Residence of Partners
_____	_____
_____	_____
_____	_____

If Bidder is a Corporation, fill in the following blanks:

Organized under the laws of the State of _____

Name and Home Address of President: _____

_____

Name and Home Address of Secretary: _____

_____

Name and Home Address of Treasurer: _____

_____

BID FORM

The above-named Bidder affirms and declares:

1. The said bidder is of lawful age and the only one interested in this bid; and no person, firm or corporation other than hereinbefore named has any interest in this bid, or in the Contract proposed to be taken.

2. By submission of this bid, each bidder and each person signing on behalf of any bidder certifies, and in the case of a joint bid each party thereto certifies as to its own organization, under penalty of perjury, that to the best of its knowledge and belief: (1) the prices in this bid have been arrived at independently without collusion, consultation, communication or agreement, for the purpose of restricting competition, as to any matter relating to such prices with any other bidder or with any competitor; (2) unless otherwise required by law, the prices quoted in this bid have not been knowingly disclosed by the bidder and will not knowingly be disclosed by the bidder prior to opening, directly or indirectly, to any other bidder or to any competitor; and (3) No attempt has been made or will be made by the bidder to induce any other person, partnership or corporation to submit or not to submit a bid for the purpose of restricting competition.

3. No councilman or other officer or employee or person whose salary is payable in whole or in part from the City Treasury is directly or indirectly interested in this bid, or in the supplies, materials, equipment, work or labor to which it relates, or in any of the profits thereof.

4. The bidder is not in arrears to the City of New York upon debt or contract or taxes, and is not a defaulter, as surety or otherwise, upon any obligation of the City of New York, and has not been declared not responsible, or disqualified, by any agency of the City of New York or State of New York, nor is there any proceeding pending relating to the responsibility or qualification of the bidder to receive public contracts except as set forth on the Affirmation included as page C-6 of this Bid Booklet.

The bidder hereby affirms that it has paid all applicable City income, excise and other taxes for all years it has conducted business activities in New York City.

5. The bidder, as an individual, or as a member, partner, director or officer of the bidder, if the same be a firm, partnership or corporation, executes this document expressly warranting and representing that should this bid be accepted by the City and the Contract awarded to him, he and his subcontractors engaged in the performance: (1) will comply with the provisions of Section 6-108 of the Administrative Code of the City of New York and the non-discrimination provisions of Section 220a of the New York State Labor Law, as more expressly and in detail set forth in the Agreement; (2) will comply with Section 6-109 of the Administrative Code of the City of New York in relation to minimum wages and other stipulations as more expressly and in detail set forth in the Agreement; (3) have complied with the provisions of the aforesaid laws since their respective effective dates, and (4) will post notices to be furnished by the City, setting forth the requirements of the aforesaid laws in prominent and conspicuous places in each and every plant, factory, building and structure where employees engaged in the performance of the Contract can readily view it, and will continue to keep such notices posted until the supplies, materials and equipment, or work labor and services required to be furnished or rendered by the Contractor have been finally accepted by the City. In the event of any breach or violation of the foregoing, the Contractor may be subject to damages, liquidated or otherwise, cancellation of the Contract and suspension as a bidder for a period of three years. (The words, "the bidder", "he", "his", and "him" where used herein shall mean the individual bidder, firm, partnership or corporation executing the bid).

6. Compliance Report

The bidder, as an individual, or as a member, partner, director, or officer of the bidder, if the same be a firm, partnership, or corporation, (1) represents that his attention has been specifically drawn to Executive Order No. 50, dated, April 25, 1980, on Equal Employment Compliance of the contract, and (2) warrants that he will comply with the provisions of Executive Order No. 50. The Employment Report must be submitted as part of the bid.

The bidder, as an individual, or as a member, partner, director, or officer of the bidder, if the same be a firm, partnership, or corporation, executes this document expressly warranting that he will comply with: (1) the provision of the contract on providing records, Chapter 8.

7. By submission of this bid, the bidder certifies that it now has and will continue to have the financial capability to fully perform the work required for this contract. Any award of this contract will be made in reliance upon such certification. Upon request therefor, the bidder will submit written verification of such financial capability in a form that is acceptable to the department.

8. In accordance with Section 165 of the State Finance Law, the bidder agrees that tropical hardwoods, as defined in Section 165 of the State Finance Law, shall not be utilized in the performance of this Contract, except as the same are permitted by the foregoing provision of law.

9. The bidder has visited and examined the site of the work and has carefully examined the Contract in the form approved by the Corporation Counsel, and will execute the Contract and perform all its items, covenants and conditions, and will provide, furnish and deliver all the work, materials, supplies, tools and appliances for all labor and materials necessary or required for the hereinafter named work, all in strict conformity with the Contract, for the prices set forth in the Bid Schedule:

10. M/WBE UTILIZATION PLAN: By signing its bid, the bidder agrees to the Vendor Certification and Required Affirmations set forth below, unless a full waiver of the Participation Goals is granted. The Vendor Certification and Required Affirmations will be deemed to satisfy the requirement to complete Section V of Part II of Schedule B: M/WBE Utilization Plan.

Section V: Vendor Certification and Required Affirmations:

I hereby:

1) acknowledge my understanding of the M/WBE participation requirements as set forth in this Contract and the pertinent provisions of Section 6-129 of the Administrative Code of the City of New York and the rules promulgated thereunder;
2) affirm that the information supplied in support of the M/WBE Utilization Plan is true and correct;
3) agree, if awarded this Contract, to comply with the M/WBE participation requirements of this Contract, the pertinent provisions of Section 6-129, and the rules promulgated thereunder, all of which shall be deemed to be material terms of this Contract;
4) agree and affirm that it is a material term of this Contract that the Vendor will award the total dollar value of the M/WBE Participation Goals to certified MBEs and/or WBEs, unless a full waiver is obtained or such goals are modified by the Agency; and
5) agree and affirm, if awarded this Contract, to make all reasonable, good faith efforts to meet the M/WBE Participation Goals, or If a partial waiver is obtained or such goals are modified by the Agency, to meet the modified Participation Goals by soliciting and obtaining the participation of certified MBE and/or WBE firms.

(NO TEXT ON THIS PAGE)

BID FORM

PROJECT ID: QED1007

TOTAL BID PRICE: In the space provided below, the Bidder shall indicate its Total Bid Price in figures. Such Total Bid Price is set forth on the final page of the Bid Schedule.

TOTAL BID PRICE:
(a/k/a BID PROPOSAL) $ _____

BIDDER'S SIGNATURE AND AFFIDAVIT

Bidder: _____

By: _____
(Signature of Partner or corporate officer)

_____

Attest: Secretary of Corporate Bidder
(Corporate Seal)

Affidavit on the following page should be subscribed
and sworn to before a Notary Public

BID FORM (TO BE NOTARIZED)

AFFIDAVIT WHERE BIDDER IS AN INDIVIDUAL

STATE OF NEW YORK, COUNTY OF _____ ss:

_____ being duly sworn says:

I am the person described in and who executed the foregoing bid, and the several matters therein stated are in all respects true.

_____

(Signature of the person who signed the Bid)

Subscribed and sworn to before me this

_____ day of _____, _____

_____

Notary Public

AFFIDAVIT WHERE BIDDER IS A PARTNERSHIP

STATE OF NEW YORK, COUNTY OF _____ ss:

_____ being duly sworn says:

I am a member of _____ the firm described in and which executed the foregoing bid. I subscribed the name of the firm thereto on behalf of the firm, and the several matters therein stated are in all respects true.

_____

(Signature of Partner who signed the Bid)

Subscribed and sworn to before me this

_____ day of _____, _____

_____

Notary Public

AFFIDAVIT WHERE BIDDER IS A CORPORATION

STATE OF NEW YORK, COUNTY OF _____ ss:

_____ being duly sworn says:

I am the _____ of the above named corporation whose name is subscribed to and which executed the foregoing bid. I reside at _____

I have knowledge of the several matters therein stated, and they are in all respects true.

_____

(Signature of Partner who signed the Bid)

Subscribed and sworn to before me this

_____ day of _____, _____

_____

Notary Public

AFFIRMATION

PROJECT ID: QED1007

The undersigned bidder affirms and declares that said bidder is not in arrears to the City of New York upon debt, contract or taxes and is not a defaulter, as surety or otherwise, upon obligation to the City of New York, and has not been declared not responsible, or disqualified, by any agency of the City of New York, nor is there any proceeding pending relating to the responsibility or qualification of the bidder to receive public contracts except:

_____

_____

(If none, the bidder shall insert the word "None" in the space provided above.)

Full Name of Bidder: _____

Address: _____

City _____ State _____ Zip Code _____

CHECK ONE BOX AND INCLUDE APPROPRIATE NUMBER:

/__/ A - Individual or Sole Proprietorship*
SOCIAL SECURITY NUMBER

- - - - - - - - - - - -

/__/ B - Partnership, Joint Venture or other unincorporated organization
EMPLOYER IDENTIFICATION NUMBER

- - - - - - - - - - - -

/__/ C- Corporation
EMPLOYER IDENTIFICATION NUMBER

- - - - - - - - - - - -

By:_____
Signature

Title:_____

If a corporation, place seal here

This affirmation must be signed by an officer or duly authorized representative.

*Under the Federal Privacy Act the furnishing of Social Security Numbers by bidders on City contracts is voluntary. Failure to provide a Social Security Number will not result in a bidder's disqualification. Social Security Numbers will be used to identify bidders, proposers or vendors to ensure their compliance with laws, to assist the City in enforcement of laws, as well as to provide the City a means of identifying of businesses which seek City contracts.

(NO TEXT ON THIS PAGE)

BID BOND 1
FORM OF BID BOND

KNOW ALL MEN BY THESE PRESENTS. That we,_____
_____
_____

hereinafter referred to as the "Principal", and _____
_____
_____

hereinafter referred to as the "Surety" are held and firmly bound to THE CITY OF NEW YORK, hereinafter referred to as the "CITY", or to its successors and assigns in the penal sum of _____

_____

($_____), Dollars lawful money of the United States, for the payment of which said sum of money well and truly to be made, we, and each of us, bind ourselves, our heirs, executors, administrators, successors and assigns, jointly and severally, firmly by these presents.

Whereas, the Principal is about to submit (or has submitted) to the City the accompanying proposal, hereby made a part hereof, to enter into a contract in writing for _____

_____

_____

NOW, THEREFORE, the conditions of this obligation are such that if the Principal shall not withdraw said Proposal without the consent of the City for a period of forty-five (45) days after the opening of bids and in the event of acceptance of the Principal's Proposal by the City, if the Principal shall:

(a) Within ten (10) days after notification by the City, execute in quadruplicate and deliver to the City all the executed counterparts of the Contract in the form set forth in the Contract Documents, in accordance with the proposal as accepted, and

(b) Furnish a performance bond and separate payment bond, as may be required by the City, for the faithful performance and proper fulfillment of such Contract, which bonds shall be satisfactory in all respects to the City and shall be executed by good and sufficient sureties, and

(c) In all respects perform the agreement created by the acceptance of said Proposal as provided in the Information for Bidders, bound herewith and made a part hereof, or if the City shall reject the aforesaid Proposal, then this obligation shall be null and void; otherwise to remain in full force and effect.

BID BOND 2

In the event that the Proposal of the Principal shall be accepted and the Contract be awarded to him the Surety hereunder agrees subject only to the payment by the Principal of the premium therefore, if requested by the City, to write the aforementioned performance and payment bonds in the form set forth in the Contract Documents.

It is expressly understood and agreed that the liability of the Surety for any and all claims hereunder shall in no event exceed the penal amount of this obligation as herein stated.

There shall be no liability under this bond if, in the event of the acceptance of the Principal's Proposal by the City, either a performance bond or payment bond, or both, shall not be required by the City on or before the 30th day after the date on which the City signs the Contract.

The surety, for the value received, hereby stipulates and agrees that the obligations of the Surety and its bond shall in no way be impaired or affected by any postponements of the date upon which the City will receive or open bids, or by any extensions of the time within which the City may accept the Principal's Proposal, or by any waiver by the City of any of the requirements of the Information for Bidders, and the Surety hereby waives notice of any such postponements, extensions, or waivers.

IN WITNESS WHEREOF, the Principal and the Surety have hereunto set their hands and seals and such of them as are corporations have caused their corporate seals to be hereto affixed and these presents to be signed by their proper officers the _____ day of _____, _____.

(Seal) _____(L.S.)
Principal

By: _____

(Seal) _____
Surety

By: _____

BID BOND 3

ACKNOWLEDGMENT OF PRINCIPAL, IF A CORPORATION

State of _____ County of _____ ss:
On this _____ day of _____, _____, before me personally came _____ to me known, who, being by me duly sworn, did depose and say that he resides at _____ that he is the _____ of _____ the corporation described in and which executed the foregoing instrument; that he knows the seal of said corporation; that one of the seals affixed to said instrument is such seal; that it was so affixed by order of the directors of said corporation, and that he signed his name thereto by like order.

_____
Notary Public

ACKNOWLEDGMENT OF PRINCIPAL, IF A PARTNERSHIP

State of _____ County of _____ ss:
On this _____ day of _____, _____, before me personally appeared _____ to me known and known to me to be one of the members of the firm of _____ described in and who executed the foregoing instrument, and he acknowledged to me that he executed the same as and for the act and deed of said firm.

_____
Notary Public

ACKNOWLEDGMENT OF PRINCIPAL, IF AN INDIVIDUAL

State of _____ County of _____ ss:
On this _____ day of _____, _____, before me personally appeared _____ to me known and known to me to be the person described in and who executed the foregoing instrument and acknowledged that he executed the same.

_____
Notary Public

AFFIX ACKNOWLEDGMENTS AND JUSTIFICATION OF SURETIES

(NO TEXT ON THIS PAGE)

M/WBE PROGRAM

M/WBE UTILIZATION PLAN

M/WBE Program Requirements: The requirements for the M/WBE Program are set forth on the following pages of this Bid Booklet, in the section entitled "Notice to All Prospective Contractors".

Schedule B: M/WBE Utilization Plan: Schedule B: M/WBE Utilization Plan for this Contract is set forth in this Bid Booklet on the pages following the section entitled "Notice to All Prospective Contractors". The M/WBE Utilization Plan (Part I) indicates whether Participation Goals have been established for this Contract. If Participation Goals have been established for this Contract, the bidder must submit an M/WBE Utilization Plan (Part II) with its bid.

Waiver: The bidder may seek a full or partial pre-award waiver of the Participation Goals in accordance with the "Notice to All Prospective Contractors" (See Part A, Section 10). The bidder's request for a waiver must be submitted at least seven (7) calendar days prior to the bid date. Waiver requests submitted after the deadline will not be considered. The form for requesting a waiver of the Participation Goals is set forth in the M/WBE Utilization Plan (Part III).

Rejection of the Bid: The bidder must complete Schedule B: M/WBE Utilization Plan (Part II) set forth in this Bid Booklet on the pages following the section entitled "Notice to All Prospective Contractors". A Schedule B submitted by the bidder which does not include the Vendor Certification and Required Affirmations (See Section V of Part II) will be deemed to be non-responsive, unless a full waiver of the Participation Goals is granted (Schedule B, Part III). In the event that the City determines that the bidder has submitted a Schedule B where the Vendor Certification and Required Affirmations are completed but other aspects of the Schedule B are not complete, or contain a copy or computation error that is at odds with the Vendor Certification and Required Affirmations, the bidder will be notified by the Agency and will be given four (4) calendar days from receipt of notification to cure the specified deficiencies and return a completed Schedule B to the Agency. Failure to do so will result in a determination that the Bid is non-responsive. Receipt of notification is defined as the date notice is emailed or faxed (if the bidder has provided an email address or fax number), or no later than five (5) calendar days from the date of mailing or upon delivery, if delivered.

Impact on LBE Requirements: If Participation Goals have been established for the participation of M/WBEs, the contractor is not required to comply with the Locally Based Enterprise Program ("LBE"). The LBE Program is set forth in Article 67 of the Contract.

NOTICE TO ALL PROSPECTIVE CONTRACTORS

PARTICIPATION BY MINORITY-OWNED AND WOMEN-OWNED BUSINESS ENTERPRISES IN CITY PROCUREMENT

ARTICLE I. M/WBE PROGRAM

Local Law No. 129 of 2005 added and Local Law 1 of 2013 amended Section 6-129 of the Administrative Code of the City of New York (hereinafter "Section 6-129"). Section 6-129 establishes the program for participation in City procurement ("M/WBE Program") by minority- owned business enterprises ("MBEs") and women-owned business enterprises ("WBEs"), certified in accordance with Section 1304 of the New York City Charter. As stated in Section 6-129, the intent of the program is to address the impact of discrimination on the City's procurement process, and to promote the public interest in avoiding fraud and favoritism in the procurement process, increasing competition for City business, and lowering contract costs. The contract provisions contained herein are pursuant to Section 6-129, and the rules of the Department of Small Business Services ("DSBS") promulgated thereunder.

If this Contract is subject to the M/WBE Program established by Section 6-129, the specific requirements of MBE and/or WBE participation for this Contract are set forth in Schedule B of the Contract (entitled the "M/WBE Utilization Plan"), and are detailed below. The Contractor must comply with all applicable MBE and WBE requirements for this Contract.

All provisions of Section 6-129 are hereby incorporated in the Contract by reference and all terms used herein that are not defined herein shall have the meanings given such terms in Section 6-129. Article I, Part A, below, sets forth provisions related to the participation goals for construction, standard and professional services contracts. Article I, Part B, below, sets forth miscellaneous provisions related to the M/WBE Program.

PART A

PARTICIPATION GOALS FOR CONSTRUCTION, STANDARD AND PROFESSIONAL SERVICES CONTRACTS OR TASK ORDERS

1. The **MBE and/or WBE Participation Goals** established for this Contract or Task Orders issued pursuant to this Contract, ("**Participation Goals**"), as applicable, are set forth on Schedule B, Part I to this Contract (see Page 1, line 1 Total Participation Goals) or will be set forth on Schedule B, Part I to Task Orders issued pursuant to this Contract, as applicable.

The **Participation Goals** represent a percentage of the total dollar value of the Contract or Task Order, as applicable, that may be achieved by awarding subcontracts to firms certified with New York City Department of Small Business Services as MBEs and/or WBEs, and/or by crediting the participation of prime contractors and/or qualified joint ventures as provided in Section 3 below, unless the goals have been waived or modified by Agency in accordance with Section 6-129 and Part A, Sections 10 and 11 below, respectively.

2. If **Participation Goals** have been established for this Contract or Task Orders issued pursuant to this Contract, Contractor agrees or shall agree as a material term of the Contract that Contractor shall be subject to the **Participation Goals**, unless the goals are waived or modified by Agency in accordance with Section 6-129 and Part A, Sections 10 and 11 below, respectively.

3. If **Participation Goals** have been established for this Contract or Task Order issued pursuant to this Contract, a Contractor that is an MBE and/or WBE shall be permitted to count its own participation toward fulfillment of the relevant **Participation Goal**, provided that in accordance with Section 6-129 the value of Contractor's participation shall be determined by subtracting from the total value of the Contract or Task Order, as applicable, any amounts that the Contractor pays to direct subcontractors (as defined in Section 6-129(c)(13)), and provided further that a Contractor that is certified as both an MBE and a WBE may count its own participation either toward the goal for MBEs or the goal for WBEs, but not both.

A Contractor that is a qualified joint venture (as defined in Section 6-129(c)(30)) shall be permitted to count a percentage of its own participation toward fulfillment of the relevant **Participation Goal**. In accordance with Section 6-129, the value of Contractor's participation shall be determined by subtracting from the total value of the Contract or Task Order, as applicable, any amounts that Contractor pays to direct subcontractors, and then multiplying the remainder by the percentage to be applied to total profit to determine the amount to which an MBE or WBE is entitled pursuant to the joint venture agreement, provided that where a participant in a joint venture is certified as both an MBE and a WBE, such amount shall be counted either toward the goal for MBEs or the goal for WBEs, but not both.

4. A. If **Participation Goals** have been established for this Contract, a prospective contractor shall be required to submit with its bid or proposal, as applicable, a completed Schedule B, M/WBE Utilization Plan, Part II (see Pages 2-4) indicating: (a) whether the contractor is an MBE or WBE, or qualified joint venture; (b) the percentage of work it intends to award to direct subcontractors; and (c) in cases where the contractor intends to award direct subcontracts, a description of the type and dollar value of work designated for participation by MBEs and/or WBEs, and the time frames in which such work is scheduled to begin and end. In the event that this M/WBE Utilization Plan indicates that the bidder or proposer, as applicable, does not intend to meet the **Participation Goals**, the bid or proposal, as applicable, shall be deemed non-responsive, unless Agency has granted the bidder or proposer, as applicable, a pre- award waiver of the Participation Goals in accordance with Section 6-129 and Part A, Section 10 below.

B. (i) If this Contract is for a master services agreement or other requirements type contract that will result in the issuance of Task Orders that will be individually registered ("Master Services Agreement") and is subject to M/WBE **Participation Goals**, a prospective contractor shall be required to submit with its bid or proposal, as applicable, a completed Schedule B, M/WBE Participation Requirements for Master Services Agreements That Will Require Individually Registered Task Orders, Part II (page 2) indicating the prospective contractor's certification and required affirmations to make all reasonable good faith efforts to meet participation goals established on each individual Task Order issued pursuant to this Contract, or if a partial waiver is obtained or such goals are modified by the Agency, to meet the modified **Participation Goals** by soliciting and obtaining the participation of certified MBE and/or WBE firms. In the event that the Schedule B indicates that the bidder or proposer, as applicable, does not intend to meet the **Participation Goals** that may be established on Task Orders issued pursuant to this Contract, the bid or proposal, as applicable, shall be deemed nonresponsive.

(ii) **Participation Goals** on a Master Services Agreement will be established for individual Task Orders issued after the Master Services Agreement is awarded. If **Participation Goals** have been established on a Task Order, a contractor shall be required to submit a Schedule B – M/WBE Utilization Plan For Independently Registered Task Orders That Are Issued Pursuant to Master Services Agreements, Part II (see Pages 2-4) indicating: (a) whether the contractor is an MBE or WBE, or qualified joint venture; (b) the percentage of work it intends to award to direct subcontractors; and (c) in cases where the contractor intends to award direct subcontracts, a description of the type and dollar value of work designated for participation by MBEs and/or WBEs, and the time frames in which such work is scheduled to begin and end. The contractor must engage in good faith efforts to meet the **Participation Goals** as established for the Task Order unless Agency has granted the contractor a pre-award waiver of the Participation Goals in accordance with Section 6-129 and Part A, Section 10 below.

C. THE BIDDER/PROPOSER MUST COMPLETE THE SCHEDULE B INCLUDED HEREIN (SCHEDULE B, PART II). A SCHEDULE B SUBMITTED BY THE BIDDER/PROPOSER WHICH DOES NOT INCLUDE THE VENDOR CERTIFICATION AND REQUIRED AFFIRMATIONS (SEE SECTION V OF PART II) WILL BE DEEMED TO BE NON-RESPONSIVE, UNLESS A FULL WAIVER OF THE PARTICIPATION GOALS IS GRANTED (SCHEDULE B, PART III). IN THE EVENT THAT THE CITY DETERMINES THAT THE BIDDER/PROPOSER HAS SUBMITTED A SCHEDULE B WHERE THE VENDOR CERTIFICATION AND REQUIRED AFFIRMATIONS ARE COMPLETED BUT OTHER ASPECTS OF THE SCHEDULE B ARE NOT COMPLETE, OR CONTAIN A COPY OR COMPUTATION ERROR THAT IS AT ODDS WITH THE VENDOR CERTIFICATION AND AFFIRMATIONS, THE BIDDER/PROPOSER WILL BE NOTIFIED BY THE AGENCY AND WILL BE GIVEN FOUR (4) CALENDAR DAYS FROM RECEIPT OF NOTIFICATION TO CURE THE SPECIFIED DEFICIENCIES AND RETURN A COMPLETED SCHEDULE B TO THE AGENCY. FAILURE TO DO

SO WILL RESULT IN A DETERMINATION THAT THE BID/PROPOSAL IS NON-RESPONSIVE. RECEIPT OF NOTIFICATION IS DEFINED AS THE DATE NOTICE IS E-MAILED OR FAXED (IF THE BIDDER/PROPOSER HAS PROVIDED AN E-MAIL ADDRESS OR FAX NUMBER), OR NO LATER THAN FIVE (5) CALENDAR DAYS FROM THE DATE OF MAILING OR UPON DELIVERY, IF DELIVERED.

5. Where an **M/WBE** Utilization Plan has been submitted, the Contractor shall, within 30 days of issuance by Agency of a notice to proceed, submit a list of proposed persons or entities to which it intends to award subcontracts within the subsequent 12 months. In the case of multiyear contracts, such list shall also be submitted every year thereafter. The Agency may also require the Contractor to report periodically about the contracts awarded by its direct subcontractors to indirect subcontractors (as defined in Section 6-129(c)(22)). **PLEASE NOTE: If this Contract is a public works project subject to GML §101(5) (i.e., a contract valued at or below $3M for projects in New York City) or if the Contract is subject to a project labor agreement in accordance with Labor Law §222, and the bidder is required to identify at the time of bid submission its intended subcontractors for the Wicks trades (plumbing and gas fitting; steam heating, hot water heating, ventilating and air conditioning (HVAC); and electric wiring), the Contractor must identify all those to which it intends to award construction subcontracts for any portion of the Wicks trade work at the time of bid submission, regardless of what point in the life of the contract such subcontracts will occur. In identifying intended subcontractors in the bid submission, bidders may satisfy any Participation Goals established for this Contract by proposing one or more subcontractors that are MBEs and/or WBEs for any portion of the Wicks trade work.** In the event that the Contractor's selection of a subcontractor is disapproved, the Contractor shall have a reasonable time to propose alternate subcontractors.

6. MBE and WBE firms must be certified by DSBS in order for the Contractor to credit such firms' participation toward the attainment of the **Participation Goals**. Such certification must occur prior to the firms' commencement of work. A list of MBE and WBE firms may be obtained from the DSBS website at www.nyc.gov/buycertified, by emailing DSBS at buyer@sbs.nyc.gov, by calling (212) 513-6356, or by visiting or writing DSBS at 110 William St., New York, New York, 10038, 7th floor. Eligible firms that have not yet been certified may contact DSBS in order to seek certification by visiting www.nyc.gov/getcertified, emailing MWBE@sbs.nyc.gov, or calling the DSBS certification helpline at (212) 513-6311. A firm that is certified as both an MBE and a WBE may be counted either toward the goal for MBEs or the goal for WBEs, but not both. No credit shall be given for participation by a graduate MBE or graduate WBE, as defined in Section 6-129(c)(20).

7. Where an **M/WBE** Utilization Plan has been submitted, the Contractor shall, with each voucher for payment, and/or periodically as Agency may require, submit statements, certified under penalty of perjury, which shall include, but not be limited to,: the total amount the Contractor paid to its direct subcontractors, and, where applicable pursuant to Section 6-129(j), the total amount direct subcontractors paid to indirect subcontractors; the names, addresses and contact numbers of each MBE or WBE hired as a subcontractor by the Contractor, and, where applicable, hired by any of the Contractor's direct subcontractors; and the dates and amounts paid to each MBE or WBE. The Contractor shall also submit, along with its voucher for final payment: the total amount it paid to subcontractors, and, where applicable pursuant to Section 6-129(j), the total amount its direct subcontractors paid directly to their indirect subcontractors; and a final list, certified under penalty of perjury, which shall include the name, address and contact information of each subcontractor that is an MBE or WBE, the work performed by, and the dates and amounts paid to each.

8. If payments made to, or work performed by, MBEs or WBEs are less than the amount specified in the Contractor's **M/WBE** Utilization Plan, Agency shall take appropriate action, in accordance with Section 6-129 and Article II below, unless the Contractor has obtained a modification of its **M/WBE** Utilization Plan in accordance with Section 6-129 and Part A, Section 11 below.

9. Where an **M/WBE** Utilization Plan has been submitted, and the Contractor requests a change order the value of which exceeds the greater of 10 percent of the Contract or Task Order, as applicable, or $500,000, Agency shall review the scope of work for the Contract or Task Order, as applicable, and the scale and types of work involved in the change order, and determine whether the **Participation Goals** should be modified.

10. Pre-award waiver of the **Participation Goals**. (a) A bidder or proposer, or contractor with respect to a Task Order, may seek a pre-award full or partial waiver of the **Participation Goals** in accordance with Section 6-129, which requests that Agency change one or more **Participation Goals** on the grounds that the **Participation Goals** are unreasonable in light of the availability of certified firms to perform the services required, or by demonstrating that it has legitimate business reasons for proposing a lower level of subcontracting in its M/WBE Utilization Plan.

(b) To apply for a full or partial waiver of the **Participation Goals**, a bidder, proposer, or contractor, as applicable, must complete Part III (Page 5) of Schedule B and submit such request no later than seven (7) calendar days prior to the date and time the bids, proposals, or Task Orders are due, in writing to the Agency by email at poped@ddc.nyc.gov or via facsimile at (718) 391-1886. Bidders, proposers, or contractors, as applicable, who have submitted requests will receive an Agency response by no later than two (2) calendar days prior to the due date for bids, proposals, or Task Orders; provided, however, that if that date would fall on a weekend or holiday, an Agency response will be provided by close-of-business on the business day before such weekend or holiday date.

(c) If the Agency determines that the **Participation Goals** are unreasonable in light of the availability of certified firms to perform the services required, it shall revise the solicitation and extend the deadline for bids and proposals, or revise the Task Order, as applicable.

(d) Agency may grant a full or partial waiver of the **Participation Goals** to a bidder, proposer or contractor, as applicable, who demonstrates—before submission of the bid, proposal or Task Order, as applicable—that it has legitimate business reasons for proposing the level of subcontracting in its **M/WBE** Utilization Plan. In making its determination, Agency shall consider factors that shall include, but not be limited to, whether the bidder, proposer or contractor, as applicable, has the capacity and the bona fide intention to perform the Contract without any subcontracting, or to perform the Contract without awarding the amount of subcontracts represented by the **Participation Goals**. In making such determination, Agency may consider whether the **M/WBE** Utilization Plan is consistent with past subcontracting practices of the bidder, proposer or contractor, as applicable, whether the bidder, proposer or contractor, as applicable, has made efforts to form a joint venture with a certified firm, and whether the bidder, proposer, or contractor, as applicable, has made good faith efforts to identify other portions of the Contract that it intends to subcontract.

11. Modification of **M/WBE** Utilization Plan. (a) A Contractor may request a modification of its **M/WBE** Utilization Plan after award of this Contract. **PLEASE NOTE: If this Contract is a public works project subject to GML §101(5) (i.e., a contract valued at or below $3M for projects in New York City) or if the Contract is subject to a project labor agreement in accordance with Labor Law §222, and the bidder is required to identify at the time of bid submission its intended subcontractors for the Wicks trades (plumbing and gas fitting; steam heating, hot water heating, ventilating and air conditioning (HVAC); and electric wiring), the Contractor may request a Modification of its M/WBE Utilization Plan as part of its bid submission.** The Agency may grant a request for Modification of a Contractor's **M/WBE** Utilization Plan if it determines that the Contractor has established, with appropriate documentary and other evidence, that it made reasonable, good faith efforts to meet the **Participation Goals.** In making such determination, Agency shall consider evidence of the following efforts, as applicable, along with any other relevant factors:

(i) The Contractor advertised opportunities to participate in the Contract, where appropriate, in general circulation media, trade and professional association publications and small business media, and publications of minority and women's business organizations;
(ii) The Contractor provided notice of specific opportunities to participate in the Contract, in a timely manner, to minority and women's business organizations;
(iii) The Contractor sent written notices, by certified mail or facsimile, in a timely manner, to advise MBEs or WBEs that their interest in the Contract was solicited;
(iv) The Contractor made efforts to identify portions of the work that could be substituted for portions originally designated for participation by MBEs and/or WBEs in the M/WBE Utilization Plan, and for which the Contractor claims an inability to retain MBEs or WBEs;

(v) The Contractor held meetings with MBEs and/or WBEs prior to the date their bids or proposals were due, for the purpose of explaining in detail the scope and requirements of the work for which their bids or proposals were solicited;

(vi) The Contractor made efforts to negotiate with MBEs and/or WBEs as relevant to perform specific subcontracts, or act as suppliers or service providers;

(vii) Timely written requests for assistance made by the Contractor to Agency's M/WBE liaison officer and to DSBS;

(viii) Description of how recommendations made by DSBS and Agency were acted upon and an explanation of why action upon such recommendations did not lead to the desired level of participation of MBEs and/or WBEs.

Agency's M/WBE officer shall provide written notice to the Contractor of the determination.

(b) The Agency may modify the **Participation Goals** when the scope of the work has been changed by the Agency in a manner that affects the scale and types of work that the Contractor indicated in its **M/WBE** Utilization Plan would be awarded to subcontractors.

12. If this Contract is for an indefinite quantity of construction, standard or professional services or is a requirements type contract and the Contractor has submitted an **M/WBE** Utilization Plan and has committed to subcontract work to MBEs and/or WBEs in order to meet the **Participation Goals**, the Contractor will not be deemed in violation of the M/WBE Program requirements for this Contract with regard to any work which was intended to be subcontracted to an MBE and/or WBE to the extent that the Agency has determined that such work is not needed.

13. If **Participation Goals** have been established for this Contract or a Task Order issued pursuant to this Contract, at least once annually during the term of the Contract or Task Order, as applicable, Agency shall review the Contractor's progress toward attainment of its M/WBE Utilization Plan, including but not limited to, by reviewing the percentage of work the Contractor has actually awarded to MBE and/or WBE subcontractors and the payments the Contractor made to such subcontractors.

14. If **Participation Goals** have been established for this Contract or a Task Order issued pursuant to this Contract, Agency shall evaluate and assess the Contractor's performance in meeting those goals, and such evaluation and assessment shall become part of the Contractor's overall contract performance evaluation.

PART B: MISCELLANEOUS

1. The Contractor shall take notice that, if this solicitation requires the establishment of an **M/WBE** Utilization Plan, the resulting contract may be audited by DSBS to determine compliance with Section 6-129. See §6-129(e)(10). Furthermore, such resulting contract may also be examined by the City's Comptroller to assess compliance with the **M/WBE** Utilization Plan.

2. Pursuant to DSBS rules, construction contracts that include a requirement for an **M/WBE** Utilization Plan shall not be subject to the law governing Locally Based Enterprises set forth in Section 6-108.1 of the Administrative Code of the City of New York.

3. DSBS is available to assist contractors and potential contractors in determining the availability of MBEs and/or WBEs to participate as subcontractors, and in identifying opportunities that are appropriate for participation by MBEs and/or WBEs in contracts.

4. Prospective contractors are encouraged to enter into qualified joint venture agreements with MBEs and/or WBEs as defined by Section 6-129(c)(30).

5. By submitting a bid or proposal the Contractor hereby acknowledges its understanding of the M/WBE Program requirements set forth herein and the pertinent provisions of Section 6-129, and any rules promulgated thereunder, and if awarded this Contract, the Contractor hereby agrees to comply with the M/WBE Program requirements of this Contract and pertinent provisions of Section 6-129, and any rules promulgated thereunder, all of which shall be deemed to be material terms of this Contract. The Contractor hereby agrees to make all reasonable, good faith efforts to solicit and obtain the participation of MBEs and/or WBEs to meet the required **Participation Goals**.

ARTICLE II. ENFORCEMENT

1. If Agency determines that a bidder or proposer, as applicable, has, in relation to this procurement, violated Section 6-129 or the DSBS rules promulgated pursuant to Section 6-129, Agency may disqualify such bidder or proposer, as applicable, from competing for this Contract and the Agency may revoke such bidder's or proposer's prequalification status, if applicable.

2. Whenever Agency believes that the Contractor or a subcontractor is not in compliance with Section 6-129 or the DSBS rules promulgated pursuant to Section 6-129, or any provision of this Contract that implements Section 6-129, including, but not limited to any **M/WBE** Utilization Plan, Agency shall send a written notice to the Contractor describing the alleged noncompliance and offering the Contractor an opportunity to be heard. Agency shall then conduct an investigation to determine whether such Contractor or subcontractor is in compliance.

3. In the event that the Contractor has been found to have violated Section 6-129, the DSBS rules promulgated pursuant to Section 6-129, or any provision of this Contract that implements Section 6-129, including, but not limited to, any **M/WBE** Utilization Plan, Agency may determine that one of the following actions should be taken:

(a) entering into an agreement with the Contractor allowing the Contractor to cure the violation;
(b) revoking the Contractor's pre-qualification to bid or make proposals for future contracts;
(c) making a finding that the Contractor is in default of the Contract;
(d) terminating the Contract;
(e) declaring the Contractor to be in breach of Contract;
(f) withholding payment or reimbursement;
(g) determining not to renew the Contract;
(h) assessing actual and consequential damages;
(i) assessing liquidated damages or reducing fees, provided that liquidated damages may be based on amounts representing costs of delays in carrying out the purposes of the M/WBE Program, or in meeting the purposes of the Contract, the costs of meeting utilization goals through additional procurements, the administrative costs of investigation and enforcement, or other factors set forth in the Contract;
(j) exercising rights under the Contract to procure goods, services or construction from another contractor and charge the cost of such contract to the Contractor that has been found to be in noncompliance; or
(k) taking any other appropriate remedy.

4. If an **M/WBE** Utilization Plan has been submitted, and pursuant to this Article II, Section 3, the Contractor has been found to have failed to fulfill its **Participation Goals** contained in its **M/WBE** Utilization Plan or the **Participation Goals** as modified by Agency pursuant to Article I, Part A, Section 11, Agency may assess liquidated damages in the amount of ten percent (10%) of the difference between the dollar amount of work required to be awarded to MBE and/or WBE firms to meet the **Participation Goals** and the dollar amount the Contractor actually awarded and paid, and/or credited, to MBE and/or WBE firms. In view of the difficulty of accurately ascertaining the loss which the City will suffer by reason of Contractor's failure to meet the **Participation Goals**, the foregoing amount is hereby fixed and agreed as the liquidated damages that the City will suffer by reason of such failure, and not as a penalty. Agency may deduct and retain out of any monies which may become due under this Contract the amount of any such liquidated damages; and in case the amount which may become due under this Contract shall be less than the amount of liquidated damages suffered by the City, the Contractor shall be liable to pay the difference.

5. Whenever Agency has reason to believe that an MBE and/or WBE is not qualified for certification, or is participating in a contract in a manner that does not serve a commercially useful function (as defined in Section 6-129(c)(8)), or has violated any provision of Section 6- 129, Agency shall notify the Commissioner of DSBS who shall determine whether the certification of such business enterprise should be revoked.

6. Statements made in any instrument submitted to Agency pursuant to Section 6-129 shall be submitted under penalty of perjury and any false or misleading statement or omission shall be grounds for the application of any applicable criminal and/or civil penalties for perjury. The making of a false or fraudulent statement by an MBE and/or WBE in any instrument submitted pursuant to Section 6-129 shall, in addition, be grounds for revocation of its certification.

7. The Contractor's record in implementing its **M/WBE** Utilization Plan shall be a factor in the evaluation of its performance. Whenever Agency determines that a Contractor's compliance with an **M/WBE** Utilization Plan has been unsatisfactory, Agency shall, after consultation with the City Chief Procurement Officer, file an advice of caution form for inclusion in VENDEX as caution data.

Tax ID #: _____ APT E-PIN #: 85015B0184

SCHEDULE B – M/WBE Utilization Plan
Part I: M/WBE Participation Goals

Part I to be completed by contracting agency

Contract Overview

APT E- Pin #	85015B0184	**FMS Project ID#:**	QED-1007
Project Title/ Agency PIN #	CONSTRUCTION OF TRUNK AND DISTRIBUTION WATER MAINS/8502014WM0013C		
Bid/Proposal Response Date	October 20, 2015		
Contracting Agency	Department of Design and Construction		
Agency Address	30-30 Thomson Avenue **City** Long Island City **State** NY **Zip Code** 11101		
Contact Person	Ann-Chevealle Brown	**Title**	MWBE Liaison & Compliance Analyst
Telephone #	(718) 391-1175	**Email**	Brownann@ddc.nyc.gov

Project Description *(attach additional pages if necessary)*

PROJECT ID: QED1007

FOR THE CONSTRUCTION OF TRUNK AND DISTRIBUTION WATER MAINS IN ARVERNE BOULEVARD BETWEEN BEACH 59TH STREET AND BEACH 54TH STREET; ROCKAWAY BEACH BOULEVARD BETWEEN BEACH 54TH STREET AND BEACH 49TH STREET; BEACH 67TH STREET BETWEEN ROCKAWAY FREEWAY AND ROCKAWAY BEACH BOULEVARD; ROCKAWAY BEACH BOULEVARD BETWEEN BEACH 54TH STREET AND BEACH 53RD STREET; AND ROCKAWAY BEACH BOULEVARD BETWEEN BEACH 52ND STREET AND BEACH 49TH STREET

INCLUDING STORM AND SANITARY SEWER WORK

Together With All Work Incidental Thereto
BOROUGH OF QUEENS
CITY OF NEW YORK

M/WBE Participation Goals for Services
Enter the percentage amount for each group or for an unspecified goal. Please note that there are no goals for Asian Americans in Professional Services.

Prime Contract Industry: Construction

Group	Percentage	
Unspecified*	**12%**	
or		
Black American	**UNSPECIFIED***	
Hispanic American	**UNSPECIFIED***	
Asian American	**UNSPECIFIED***	
Women	**UNSPECIFIED***	
Total Participation Goals	**12%**	**Line 1**

**Note: For this procurement, individual ethnicity and gender goals are not specified. The Total Participation Goal for construction contracts may be met by using either Black-American, Hispanic-American, Asian American, or Women certified firms or any combination of such firms.*

Tax ID #: _____ APT E-
PIN #: 85015B0184

SCHEDULE B - Part II: M/WBE Participation Plan

Part II to be completed by the bidder/proposer.
Please note: For Non-M/WBE Prime Contractors who will NOT subcontract any services and will self-perform the entire contract, you must obtain a FULL waiver by completing the Waiver Application on pages 17 and 18 and timely submitting it to the contracting agency pursuant to the Notice to Prospective Contractors. Once a FULL WAIVER is granted, it must be included with your bid or proposal and you do not have to complete or submit this form with your bid or proposal.

Section I: Prime Contractor Contact Information

Tax ID #		**FMS Vendor ID #**	
Business Name		**Contact Person**	
Address			
Telephone #		**Email**	

Section II: M/WBE Utilization Goal Calculation: Check the applicable box and complete subsection.

PRIME CONTRACTOR ADOPTING AGENCY M/WBE PARTICIPATION GOALS

☐ **For Prime Contractors (including Qualified Joint Ventures and M/WBE firms) adopting Agency M/WBE Participation Goals.**

Calculate the total dollar value of your total bid that you agree will be awarded to M/WBE subcontractors for services and/or credited to an M/WBE prime contractor or Qualified Joint Venture.

Please review the Notice to Prospective Contractors for more information on how to obtain credit for M/WBE participation.

Total Bid/Proposal Value		**Agency Total Participation Goals (Line 1, Page 13)**		**Calculated M/WBE Participation Amount**
$	X		=	$ Line 2

PRIME CONTRACTOR OBTAINED PARTIAL WAIVER APPROVAL: ADOPTING MODIFIED M/WBE PARTICIPATION GOALS

☐ **For Prime Contractors (including Qualified Joint Ventures and M/WBE firms) adopting Modified M/WBE Participation Goals.**

Calculate the total dollar value of your total bid that you agree will be awarded to M/WBE subcontractors for services and/or credited to an M/WBE prime contractor or Qualified Joint Venture.

Please review the Notice to Prospective Contractors for more information on how to obtain credit for M/WBE participation.

Total Bid/Proposal Value		**Adjusted Participation Goal (From Partial Waiver)**		**Calculated M/WBE Participation Amount**
$	X		=	$ Line 3

Tax ID #:_____ APT E-
PIN #: 85015B0184

Section III: M/WBE Utilization Plan: How Proposer/Bidder Will Fulfill M/WBE Participation Goals. Please review the Notice to Prospective Contractors for more information on how to obtain credit for M/WBE participation. Check applicable box. The Proposer or Bidder will fulfill the M/WBE Participation Goals:

☐ As an M/WBE Prime Contractor that will self-perform and/or subcontract to other M/WBE firms a portion of the contract the value of which is at least the amount located on Lines 2 or 3 above, as applicable. The value of any work subcontracted to non-M/WBE firms will not be credited towards fulfillment of M/WBE Participation Goals. Please check all that apply to Prime Contractor:

☐ MBE ☐WBE

☐ As a Qualified Joint Venture with an M/WBE partner, in which the value of the M/WBE partner's participation and/or the value of any work subcontracted to other M/WBE firms is at least the amount located on Lines 2 or 3 above, as applicable. The value of any work subcontracted to non M/WBE firms will not be credited towards fulfillment of M/WBE Participation Goals.

☐ As a non M/WBE Prime Contractor that will enter into subcontracts with M/WBE firms the value of which is at least the amount located on Lines 2 or 3 above, as applicable.

Section IV: General Contract Information

What is the expected percentage of the total contract dollar value that you expect to award in subcontracts for services, regardless of M/WBE status? % _____

✓ Scopes of Subcontract Work

Enter brief description of the type(s) and dollar value of subcontracts for all/any services you plan on subcontracting if awarded this contract. For each item, indicate whether the work is designated for participation by MBEs and/or WBEs and the time frame in which such work is scheduled to begin and end. Use additional sheets if necessary.

1._____
2._____
3._____
4._____
5._____
6._____
7._____
8._____
9._____
10._____
11._____
12._____
13._____
14._____
15._____
16._____
17._____

Tax ID #: _____ APT E-PIN #: 85015B0184

Section V: Vendor Certification and Required Affirmations

I hereby:

1) acknowledge my understanding of the M/WBE participation requirements as set forth herein and the pertinent provisions of Section 6-129 of the Administrative Code of the City of New York ("Section 6-129"), and the rules promulgated thereunder;

2) affirm that the information supplied in support of this M/WBE Utilization Plan is true and correct;

3) agree, if awarded this Contract, to comply with the M/WBE participation requirements of this Contract, the pertinent provisions of Section 6-129, and the rules promulgated thereunder, all of which shall be deemed to be material terms of this Contract;

4) agree and affirm that it is a material term of this Contract that the Vendor will award the total dollar value of the M/WBE Participation Goals to certified MBEs and/or WBEs, unless a full waiver is obtained or such goals are modified by the Agency; and

5) agree and affirm, if awarded this Contract, to make all reasonable, good faith efforts to meet the M/WBE Participation Goals, or If a partial waiver is obtained or such goals are modified by the Agency, to meet the modified Participation Goals by soliciting and obtaining the participation of certified MBE and/or WBE firms.

Signature _____ **Date** _____

Print Name _____ **Title** _____

SCHEDULE B – PART III – REQUEST FOR WAIVER OF M/WBE PARTICIPATION REQUIREMENT

Contract Overview

Tax ID # _____ FMS Vendor ID # _____

Business Name _____

Contact Name _____ Telephone # _____ Email _____

Type of Procurement ☐ Competitive Sealed Bids ☐ Other Bid/Response Due Date _____

APT E-PIN # (for this procurement):_____ Contracting Agency: _____

M/WBE Participation Goals *as described in bid/solicitation documents*

_____ % Agency M/WBE Participation Goal

Proposed M/WBE Participation Goal *as anticipated by vendor seeking waiver*

_____ % of the total contract value anticipated in good faith by the bidder/proposer to be subcontracted for services and/or credited to an M/WBE Prime Contractor or Qualified Joint Venture.

Basis for Waiver Request *Check appropriate box & explain in detail below (attach additional pages if needed)*

☐ **Vendor does not subcontract services, and has the capacity and good faith intention to perform all such work itself with its own employees.**

☐ **Vendor subcontracts *some* of this type of work but at a *lower* % than bid/solicitation describes, and has the capacity and good faith intention to do so on this contract. (Attach subcontracting plan outlining services that the vendor will self-perform and subcontract to other vendors or consultants.)**

☐ **Vendor has other legitimate business reasons for proposing the M/WBE Participation Goal above. Explain under separate cover.**

References

List 3 most recent contracts performed for NYC agencies (if any). Include information for each subcontract awarded in performance of such contracts. Add more pages if necessary.

CONTRACT NO. _____	**AGENCY** _____	**DATE COMPLETED** _____
Total Contract Amount $ _____	**Total Amount Subcontracted** $ _____	_____
Item of Work Subcontracted and Value of subcontract _____	Item of Work Subcontracted and Value of subcontract _____	Item of Work Subcontracted and Value of subcontract _____
CONTRACT NO. _____	**AGENCY** _____	**DATE COMPLETED** _____
Total Contract Amount $ _____	**Total Amount Subcontracted** $ _____	_____
Item of Work Subcontracted and Value of subcontract _____	Item of Work Subcontracted and Value of subcontract _____	Item of Work Subcontracted and Value of subcontract _____
CONTRACT NO.	**AGENCY**	**DATE COMPLETED**
Total Contract Amount $	**Total Amount Subcontracted** $	
Item of Work Subcontracted and Value of subcontract _____	Item of Work Subcontracted and Value of subcontract _____	Item of Work Subcontracted and Value of subcontract _____

List 3 most recent contracts performed for other entities. Include information for each subcontract awarded in performance of such contracts. Add more pages if necessary.

(Complete ONLY if vendor has performed fewer than 3 New York City contracts.)

TYPE OF Contract _____ **ENTITY** _____ **DATE COMPLETED** _____

Manager at entity that hired vendor (Name/Phone No./Email) _____

Total Contract Amount $ _____ **Total Amount Subcontracted** $ _____ _____

Type of Work Subcontracted _____ _____ _____

_____

TYPE OF Contract _____ **AGENCY/ENTITY** _____ **DATE COMPLETED** _____

Manager at agency/entity that hired vendor (Name/Phone No./Email) _____

Total Contract Amount $ _____ **Total Amount Subcontracted** $ _____ _____

Item of Work Subcontracted and Value of subcontract _____ Item of Work Subcontracted and Value of subcontract _____ Item of Work Subcontracted and Value of subcontract _____

_____

TYPE OF Contract _____ **AGENCY/ENTITY** _____ **DATE COMPLETED** _____

Manager at entity that hired vendor (Name/Phone No./Email) _____

Total Contract Amount $ _____ **Total Amount Subcontracted** $ _____ _____

Item of Work Subcontracted and Value of subcontract _____ Item of Work Subcontracted and Value of subcontract _____ Item of Work Subcontracted and Value of subcontract _____

_____

VENDOR CERTIFICATION: *I hereby affirm that the information supplied in support of this waiver request is true and correct, and that this request is made in good faith.*

Signature: _____ **Date:** _____

Print Name: _____ **Title:** _____

Shaded area below is for agency completion only

AGENCY CHIEF CONTRACTING OFFICER APPROVAL

Signature: _____ **Date:** _____

CITY CHIEF PROCUREMENT OFFICER APPROVAL

Signature: _____ **Date:** _____

Waiver Determination

Full Waiver Approved: ☐
Waiver Denied: ☐
Partial Waiver Approved: ☐
Revised Participation Goal:_____%

APPRENTICESHIP PROGRAM REQUIREMENTS

Bidders are advised that the Apprenticeship Program Requirements set forth below apply to each contract for which a check mark is indicated before the word "Yes". Compliance with these requirements will be determined solely by the City.

____√____ YES _____ NO

(1) Apprenticeship Program Requirements

Notice to Bidders: Please be advised that, pursuant to the authority granted to the City under Labor Law Section 816-b, the Department of Design and Construction hereby requires that the contractor awarded a contract as a result of this Invitation for Bids, and any of its subcontractors with subcontracts worth two million dollars or over, have, prior to entering into such contract or subcontract, apprenticeship agreements appropriate for the type and scope of work to be performed that have been registered with, and approved by, the New York State Commissioner of Labor. In addition, the contractor and its subcontractors will be required to show that such apprenticeship program/s have successfully passed the two year Probation period following the initial registration date of such program/s with the New York State Department of Labor.

The failure to prove, upon request, that these requirements have been met shall result in the contract not being awarded to the contractor or the subcontract not being approved.

Please be further advised that, pursuant to Labor Law Section 220, the allowable ratio of apprentices to journeypersons in any craft classification shall not be greater than the ratio permitted to the contractor as to its workforce on any job under the registered apprenticeship program.

(2) Apprenticeship Program Questionnaire

The bidder must submit a completed and signed Apprenticeship Program Questionnaire. The Questionnaire is set forth on the following page of the Bid Booklet.

APPRENTICESHIP PROGRAM QUESTIONNAIRE

PROJECT ID: QED1007

The bidder must submit a completed and signed Apprenticeship Program Questionnaire.

1. Does the bidder have an Apprenticeship Program appropriate for the type and scope of work to be performed? [Note: Participation may be by either direct sponsorship or through collective bargaining agreement(s).]

   _____ YES _____ NO

2. Has the bidder's Apprenticeship Program been registered with, and approved by, the New York State Commissioner of Labor?

   _____ YES _____ NO

3. Has the bidder's Apprenticeship Program had three years of successful experience in providing career opportunities?

   _____ YES _____ NO

If the answer to Question #3 is "Yes", the bidder shall, in the space below, provide information regarding the experience the Apprenticeship Program has had in providing career opportunities. The bidder may attach additional pages if necessary.

_____

_____

_____

_____

_____

_____

_____

_____

_____

_____

_____

Bidder: _____

By: _____ Title: _____
(Signature of Partner or Corporate Officer)

Date: _____

Project ID. _____

SAFETY QUESTIONNAIRE

The bidder must include, with its bid, all information requested on this Safety Questionnaire. Failure to provide a completed and signed Safety Questionnaire at the time of bid opening may result in disqualification of the bid as non-responsive.

1. Bidder Information:

Company Name: _____

DDC Project Number: _____

Company Size: _____ Ten (10) employees or less

_____ Greater than ten (10) employees

Company has previously worked for DDC _____ YES _____ NO

2. Type(s) of Construction Work

TYPE OF WORK	LAST 3 YEARS	THIS PROJECT
General Building Construction		
Residential Building Construction		
Nonresidential Building Construction		
Heavy Construction, except building		
Highway and Street Construction		
Heavy Construction, except highways		
Plumbing, Heating, HVAC		
Painting and Paper Hanging		
Electrical Work		
Masonry, Stonework and Plastering		
Carpentry and Floor Work		
Roofing, Siding, and Sheet Metal		
Concrete Work		
Specialty Trade Contracting		
Asbestos Abatement		
Other (specify)		
_____	_____	_____

3. Experience Modification Rate:

The Experience Modification Rate (EMR) is a rating generated by the National Council of Compensation Insurance (NCCI). This rating is used to determine the contractor's premium for worker's compensation insurance. The contractor may obtain its EMR by contacting its insurance broker or the NCCI. If the contractor cannot obtain its EMR, it must submit a written explanation as to why.

Project ID. _____

The Contractor must indicate its Intrastate and Interstate EMR for the past three years. [Note: For contractors with less than three years of experience, the EMR will be considered to be 1.00].

YEAR	INTRASTATE RATE	INTERSTATE RATE
_____	_____	_____
_____	_____	_____
_____	_____	_____

If the Intrastate and/or Interstate EMR for any of the past three years is greater than 1.00, the contractor must attach, to this questionnaire, a written explanation for the rating and identify what corrective action was taken to correct the situation resulting in that rating.

4. OSHA Information:

____ YES ____ NO Contractor has received a willful violation issued by OSHA or New York City Department of Buildings (NYCDOB) within the last three years.

____ YES ____ NO Contractor has had an incident requiring OSHA notification within 8 hours (all work-related fatalities) or an incident requiring OSHA notification within 24 hours (all work-related in-patient hospitalizations, all amputations and all losses of an eye).

The Occupational Safety and Health Act (OSHA) of 1970 requires employers with ten or more employees, on a yearly basis to complete and maintain on file the form entitled "Log of Work-related Injuries and Illnesses". This form is commonly referred to as the OSHA 300 Log (OSHA 200 Log for 2001 and earlier).

The OSHA 300 Log must be submitted for the last three years for contractors with more than ten employees.

The Contractor must indicate the total number of hours worked by its employees, as reflected in payroll records for the past three years.

The contractor must submit the Incident Rate for Lost Time Injuries (the Incident Rate) for the past three years. The Incident Rate is calculated in accordance with the formula set forth below. For each given year, the total number of incidents is the total number of non-fatal injuries and illnesses reported on the OSHA 300 Log. The 200,000 hours represents the equivalent of 100 employees working forty hours a week, fifty weeks per year.

$$\text{Incident Rate} = \frac{\text{Total Number of Incidents X 200,000}}{\text{Total Number of Hours Worked by Employees}}$$

YEAR	TOTAL NUMBERS OF HOURS WORKED BY EMPLOYEES	INCIDENT RATE
_____	_____	_____
_____	_____	_____
_____	_____	_____

If the contractor's Incident Rate for any of the past three years is one point higher than the Incident Rate for the type of construction it performs (listed below), the contractor must attach, to this questionnaire, a written explanation for the relatively high rate.

General Building Construction	8.5
Residential Building Construction	7.0
Nonresidential Building Construction	10.2
Heavy Construction, except building	8.7
Highway and Street Construction	9.7
Heavy Construction, except highways	8.3
Plumbing, Heating, HVAC	11.3
Painting and Paper Hanging	6.9
Electrical Work	9.5
Masonry, Stonework and Plastering	10.5
Carpentry and Floor Work	12.2
Roofing, Siding, and Sheet Metal	10.3
Concrete Work	8.6
Specialty Trade Contracting	8.6

5. Safety Performance on Previous DDC Project(s)

___ YES ___ NO Contractor previously audited by the DDC Office of Site Safety.

DDC Project Number(s): _____, _____, _____

___ YES ___ NO Accident on previous DDC Project(s).

DDC Project Number(s): _____, _____, _____

___ YES ___ NO Fatality or Life-altering Injury on DDC Project(s) within the last three years. [Examples of a life-altering injury include loss of limb, loss of a sense (e.g., sight, hearing), or loss of neurological function].

DDC Project Number(s): _____, _____, _____

Date: _____ By: _____

(Signature of Owner, Partner, Corporate Officer)

Title: _____

(NO TEXT ON THIS PAGE)

Pre-Award Process

The bidder is advised that as part of the pre-award review of its bid, it may be required to submit the information described in Sections (A) through (D) below. If required, such information must be submitted by the bidder within five (5) business days following receipt of notification from DDC that it is among the low bidders. Such notification from DDC will be by facsimile or in writing and will specify the types of information must be submitted. The types of information the bidder may be required to submit are described below. In the event the bidder fails to submit the required information within the specified time frame, its bid may be rejected as nonresponsive.

****

(A) **Project Reference Form**: If required, the bidder must complete and submit the Project Reference Form set forth on pages 26 through 28 of this Bid Booklet. The Project Reference Form consists of 3 parts: (1) Similar Contracts Completed by the Bidder, (2) Contracts Currently Under Construction by the Bidder, and (3) Pending Contracts Not Yet Started by the Bidder.

(B) **Copy of License**: If required, the bidder must submit a copy of the license under which the bidder will be performing the work. Such license must clearly show the following: (1) Name of the Licensee, (2) License Number, and (3) Expiration date of the License. A copy of the license will be required from bidders for the following contracts: Plumbing Work, Electrical Work and Asbestos Abatement.

(C) **Financial Information**: If required, the bidder must submit the financial information described below:

(1) Audited Financial Statements: Financial statements (Balance Sheet and Income Statement) of the entity submitting the bid, as audited by an independent auditor licensed to practice as a certified public accountant (CPA). Audited financial statements for the three most recent fiscal years must be submitted. Each such financial statement must include the auditor's standard report.

If the bidder does not have audited financial statements, it must submit an affidavit attesting to the fact that the bidder does not have such statements. In addition, the bidder must submit the following documentation covering the three most recent fiscal years: signed federal tax returns, unaudited financial statements, and a "certified review letter" from a certified public accountant (CPA) verifying the unaudited financial statements.

Unless the most recent audited or unaudited financial statement was issued within ninety (90) days, the bidder must submit interim financial information that includes data on financial position and results of operation (income data) for the current fiscal year. Such information may be summarized on a monthly or quarterly basis or at other intervals.

(2) Schedule of Aged Accounts Receivable, including portion due within ninety (90) days.

(D) **Project Specific Information**: If required, the bidder must submit the project specific information described below:

(1) Statement indicating the number of years of experience the bidder has had and in what type of construction.
(2) Resumes of all key personnel to be involved in the project, including the proposed project superintendent.
(3) List of significant pieces of equipment expected to be used for the contract, and whether such equipment is owned or leased.
(4) Description of work expected to be subcontracted, and to what firms, if known.
(5) List of key material suppliers.
(6) Preliminary bar chart time schedule
(7) Contractor's expected means of financing the project. This should be based on the assumption that the contractor is required to finance 2X average monthly billings throughout the contract period.
(8) Any other issues the contractor sees as impacting his ability to complete the project according to the contract.

In addition to the information described in Sections (A) through (D) above, the bidder shall submit such additional information as the Commissioner may require, including without limitation, an explanation or justification for specific unit price items.

The bidder is further advised that it may be required to attend a pre-award meeting with DDC representatives. If such a meeting is convened, the bidder will be advised as to any additional material to be provided.

A. PROJECT REFERENCES – SIMILAR CONTRACTS COMPLETED BY THE BIDDER

List all contracts substantially completed within the last 4 years similar to the contract being awarded, up to a maximum of 10, in descending order of date of substantial completion.

Project & Location	Contract Type	Contract Amount ($000)	Date Completed	Owner Reference & Tel. No.	Architect/Engineer Reference & Tel. No. if different from owner

B. PROJECT REFERENCES – CONTRACTS CURRENTLY UNDER CONSTRUCTION BY THE BIDDER

List all contracts currently under construction even if they are not similar to the contract being awarded.

Project & Location	Contract Type	Contract Amount ($000)	Subcontracted to Others ($000)	Uncompleted Portion ($000)	Date Scheduled to Complete	Owner Reference & Tel. No.	Architect/Engineer Reference & Tel. No. if different from owner

C. PROJECT REFERENCES – PENDING CONTRACTS NOT YET STARTED BY THE BIDDER

List all contracts awarded to or won by the bidder but not yet started.

Project & Location	Contract Type	Contract Amount ($000)	Date Scheduled to Start	Owner Reference & Tel. No.	Architect/Engineer Reference & Tel. No. if different from owner

(NO TEXT ON THIS PAGE)

OFFICE OF THE MAYOR
BUREAU OF LABOR SERVICES
CONTRACT CERTIFICATE

To be completed if the contract is less than $1,000,000

Contractor: _____

Address: _____

_____

Telephone Number: _____

Name and Title of Signatory: _____

_____

Contracting Agency or Owner: _____

Project Number: _____

Proposed Contract Amount: _____

Description and Address of Proposed Contract: _____

Names of Subcontractors in the amount of 750,000 or more on this contract (if not known at this time, so state indicating that trades will be subcontracted):

_____

_____

_____

I, (fill in name of person signing) _____, hereby affirm that I am authorized by the above-named contractor to certify that said contractor's proposed contract with the above-named owner or city agency is less than $1,000,000. This affirmation is made in accordance with Executive Order No. 50 (1980) as amended and its implementing regulations.

_____ _____

Date Signature

WILLFUL OR FRAUDULENT FALSIFICATION OF ANY DATA OR INFORMATION SUBMITTED HEREWITH MAY RESULT IN THE TERMINATION OF ANY CONTRACT BETWEEN THE CITY AND THE BIDDER OR CONTRACTOR AND BAR THE BIDDER OR CONTRACTOR FROM PARTICIPATION IN ANY CITY CONTRACT FOR A PERIOD OF UP TO THREE YEARS. FURTHER, SUCH FALSIFICATION MAY RESULT IN CRIMINAL PROSECUTION.

(NO TEXT ON THIS PAGE)

VENDEX COMPLIANCE

(A) Vendex Fees: Pursuant to Procurement Policy Board Rule 2-08(f)(2), the contractor will be charged a fee for the administration of the VENDEX system, including the Vendor Name Check process, if a Vendor Name Check review is required to be conducted by the Department of Investigation. The contractor shall also be required to pay the applicable required fees for any of its subcontractors for which Vendor Name Check reviews are required. The fee(s) will be deducted from payments made to the contractor under the contract. For contracts with an estimated value of less than or equal to $1,000,000, the fee will be $175 per Vendor Name Check review. For contracts with an estimated value of greater than $1,000,000, the fee will be $350 per Vendor Name Check review.

(B) Confirmation of Vendex Compliance: The Bidder shall submit this Confirmation of Vendex Compliance to the Department of Design and Construction, Contracts Section, 30-30 Thomson Avenue – First Floor, Long Island City, NY 11101.

Bid Information: The Bidder shall complete the bid information set forth below.

Name of Bidder: _____
Bidder's Address: _____
Bidder's Telephone Number: _____
Bidder's Fax Number: _____
Date of Bid Opening: _____
Project ID: _____

Vendex Compliance: To demonstrate compliance with Vendex requirements, the Bidder shall complete either Section (1) or Section (2) below, whichever applies.

(1) **Submission of Vendex Questionnaires to MOCS:** By signing in the space provided below, the Bidder certifies that as of the date specified below, the Bidder has submitted Vendex Questionnaires to the Mayor's Office of Contract Services, Attn: VENDEX, 253 Broadway, 9th Floor, New York, New York 10007.

Date of Submission: _____

By: _____
(Signature of Partner or corporate officer)

Print Name: _____

(2) **Submission of Certification of No Change to DDC:** By signing in the space provided below, the Bidder certifies that it has read the instructions in a "Vendor's Guide to Vendex" and that such instructions do not require the Bidder to submit Vendex Questionnaires. The Bidder has completed **TWO ORIGINALS** of the Certification of No Change set forth on the next page of this Bid Booklet.

By: _____
(Signature of Partner or corporate officer)

Print Name: _____

(NO TEXT ON THIS PAGE)

Certificate of No Change Form

Mayor's Office of Contract Services

- Please submit two completed forms. Copies will not be accepted.
- Please send both copies to the agency that requested it, unless you are advised to send it directly to the Mayor's Office of Contract Services (MOCS).
- A materially false statement willfully or fraudulently made in connection with this certification, and/or the failure to conduct appropriate due diligence in verifying the information that is the subject of this certification, may result in rendering the submitting entity non-responsible for the purpose of contract award.
- A materially false statement willfully or fraudulently made in connection with this certification may subject the person making the false statement to criminal charges

I, _____, being duly sworn, state that I have read
Enter Your Name

and understand all the items contained in the vendor questionnaire and any submission of change as identified on page one of this form and certify that as of this date, these items have not changed. I further certify that, to the best of my knowledge, information and belief, those answers are full, complete, and accurate; and that, to the best of my knowledge, information, and belief, those answers continue to be full, complete, and accurate.

In addition, I further certify on behalf of the submitting vendor that the information contained in the principal questionnaire(s) and any submission of change identified on page two of this form have not changed and have been verified and continue, to the best of my knowledge, to be full, complete and accurate.

I understand that the City of New York will rely on the information supplied in this certification as additional inducement to enter into a contract with the submitting entity.

Vendor Questionnaire *This section is required.*

This refers to the vendor questionnaire(s) submitted for the vendor doing business with the City.

Name of Submitting Entity: _____

Vendor's Address: _____

Vendor's EIN or TIN: _____ Requesting Agency: _____

Are you submitting this Certification as a parent? (Please circle one) Yes No

Signature date on the last full vendor questionnaire signed for the submitting vendor: _____

Signature date on change submission for the submitting vendor: _____

Mayor's Office of Contract Services
253 Broadway, 9th Floor New York, NY 10007
Phone: 212 788 0018 Fax: 212 788 0049

Principal Questionnaire

This section refers to the most recent principal questionnaire submissions.

Mayor's Office of Contract Services

	Principal Name	Date of signature on last full Principal Questionnaire	Date(s) of signature on submission of change
1			
2			
3			
4			
5			
6			

☐ Check if additional changes were submitted and attach a document with the date of additional submissions.

Certification *This section is required.*

This form must be signed and notarized. Please complete this twice. Copies will not be accepted.

Certified By:

_____
Name (Print)

_____
Title

_____
Name of Submitting Entity

_____ _____
Signature *Date*

Notarized By:

_____ _____ _____
Notary Public *County License Issued* *License Number*

Sworn to before me on: _____
Date

Certificate of No Change Form

Mayor's Office of Contract Services

- Please submit two completed forms. Copies will not be accepted.
- Please send both copies to the agency that requested it, unless you are advised to send it directly to the Mayor's Office of Contract Services (MOCS).
- A materially false statement willfully or fraudulently made in connection with this certification, and/or the failure to conduct appropriate due diligence in verifying the information that is the subject of this certification, may result in rendering the submitting entity non-responsible for the purpose of contract award.
- A materially false statement willfully or fraudulently made in connection with this certification may subject the person making the false statement to criminal charges

I, _____, being duly sworn, state that I have read
Enter Your Name

and understand all the items contained in the vendor questionnaire and any submission of change as identified on page one of this form and certify that as of this date, these items have not changed. I further certify that, to the best of my knowledge, information and belief, those answers are full, complete, and accurate; and that, to the best of my knowledge, information, and belief, those answers continue to be full, complete, and accurate.

In addition, I further certify on behalf of the submitting vendor that the information contained in the principal questionnaire(s) and any submission of change identified on page two of this form have not changed and have been verified and continue, to the best of my knowledge, to be full, complete and accurate.

I understand that the City of New York will rely on the information supplied in this certification as additional inducement to enter into a contract with the submitting entity.

Vendor Questionnaire *This section is required.*

This refers to the vendor questionnaire(s) submitted for the vendor doing business with the City.

Name of Submitting Entity: _____

Vendor's Address: _____

Vendor's EIN or TIN: _____ Requesting Agency: _____

Are you submitting this Certification as a parent? (Please circle one) Yes No

Signature date on the last full vendor questionnaire signed for the submitting vendor: _____

Signature date on change submission for the submitting vendor: _____

Mayor's Office of Contract Services
253 Broadway, 9th Floor New York, NY 10007
Phone: 212 788 0018 Fax: 212 788 0049

Principal Questionnaire

This section refers to the most recent principal questionnaire submissions.

Mayor's Office of Contract Services

	Principal Name	Date of signature on last full Principal Questionnaire	Date(s) of signature on submission of change
1			
2			
3			
4			
5			
6			

☐ Check if additional changes were submitted and attach a document with the date of additional submissions.

Certification *This section is required.*

This form must be signed and notarized. Please complete this twice. Copies will not be accepted.

Certified By:

_____
Name (Print)

_____
Title

_____
Name of Submitting Entity

_____ _____
Signature *Date*

Notarized By:

_____ _____ _____
Notary Public *County License Issued* *License Number*

Sworn to before me on: _____
Date

IRAN DIVESTMENT ACT COMPLIANCE RIDER

FOR NEW YORK CITY CONTRACTORS

The Iran Divestment Act of 2012, effective as of April 12, 2012, is codified at State Finance Law ("SFL") §165-a and General Municipal Law ("GML") §103-g. The Iran Divestment Act, with certain exceptions, prohibits municipalities, including the City, from entering into contracts with persons engaged in investment activities in the energy sector of Iran. Pursuant to the terms set forth in SFL §165-a and GML §103-g, a person engages in investment activities in the energy sector of Iran if:

(a) The person provides goods or services of twenty million dollars or more in the energy sector of Iran, including a person that provides oil or liquefied natural gas tankers, or products used to construct or maintain pipelines used to transport oil or liquefied natural gas, for the energy sector of Iran; or

(b) The person is a financial institution that extends twenty million dollars or more in credit to another person, for forty-five days or more, if that person will use the credit to provide goods or services in the energy sector in Iran and is identified on a list created pursuant to paragraph (b) of subdivision three of Section 165-a of the State Finance Law and maintained by the Commissioner of the Office of General Services.

A bid or proposal shall not be considered for award nor shall any award be made where the bidder or proposer fails to submit a signed and verified bidder's certification.

Each bidder or proposer must certify that it is not on the list of entities engaged in investment activities in Iran created pursuant to paragraph (b) of subdivision 3 of Section 165-a of the State Finance Law. In any case where the bidder or proposer cannot certify that they are not on such list, the bidder or proposer shall so state and shall furnish with the bid or proposal a signed statement which sets forth in detail the reasons why such statement cannot be made. The City of New York may award a bid to a bidder who cannot make the certification on a case by case basis if:

(1) The investment activities in Iran were made before the effective date of this section (i.e., April 12, 2012), the investment activities in Iran have not been expanded or renewed after the effective date of this section and the person has adopted, publicized and is implementing a formal plan to cease the investment activities in Iran and to refrain from engaging in any new investments in Iran: or

(2) The City makes a determination that the goods or services are necessary for the City to perform its functions and that, absent such an exemption, the City would be unable to obtain the goods or services for which the contract is offered. Such determination shall be made in writing and shall be a public document.

BIDDER'S CERTIFICATION OF COMPLIANCE WITH IRAN DIVESTMENT ACT

Pursuant to General Municipal Law §103-g, which generally prohibits the City from entering into contracts with persons engaged in investment activities in the energy sector of Iran, the bidder/proposer submits the following certification:

[*Please Check One*]

BIDDER'S CERTIFICATION

☐ By submission of this bid or proposal, each bidder/proposer and each person signing on behalf of any bidder/proposer certifies, and in the case of a joint bid each party thereto certifies as to its own organization, under penalty of perjury, that to the best of its knowledge and belief, that each bidder/proposer is not on the list created pursuant to paragraph (b) of subdivision 3 of Section 165-a of the State Finance Law.

☐ I am unable to certify that my name and the name of the bidder/proposer does not appear on the list created pursuant to paragraph (b) of subdivision 3 of Section 165-a of the State Finance Law. I have attached a signed statement setting forth in detail why I cannot so certify.

_____
SIGNATURE

_____
PRINTED NAME

_____
TITLE

Sworn to before me this
_____ day of_____, 20____

_____
Notary Public

Dated:

THE CITY OF NEW YORK
DEPARTMENT OF SMALL BUSINESS SERVICES
DIVISION OF LABOR SERVICES
CONTRACT COMPLIANCE UNIT
110 WILLIAMS STREET
NEW YORK, NEW YORK 10038
PHONE: (212) 513-6323
FAX: (212) 618-8879

CONSTRUCTION

EMPLOYMENT

REPORT

(NO TEXT ON THIS PAGE)

The City of New York
Department of Small Business Services
Division of Labor Services
Contract Compliance Unit
110 William Street
New York, New York 10038
Phone: (212) 513 – 6323
Fax: (212) 618-8878

CONSTRUCTION EMPLOYMENT REPORT INSTRUCTIONS

WHO MUST FILE A CONSTRUCTION EMPLOYMENT REPORT

A Construction Employment Report (ER) must be filed if you meet the following conditions:

CONTRACT FUNDING SOURCE	CONTRACTOR	CONTRACT VALUE	SUBMISSION REQUIREMENT
Federal/Federally assisted	Prime and subcontractors	$10,000 or greater	Construction Employment Report
City and state funded	Prime contractor	$1,000,000 or greater	
	Subcontractor	$750,000 or greater	
		Less than $750,000	Less than $750,000 Certificate (City/State Only)

Prime Contractor:

- A general contractor or construction manager selected to perform work on a construction project funded (in whole or in part) by the federal government with a proposed contract value of $10,000 or more.
- A general contractor or construction manager selected to perform work on a construction project funded or assisted by the City of New York with a proposed contract value of $1,000,000 or more.

Subcontractor:

- A subcontractor selected to perform work on a construction project funded (in whole or in part) by the federal government with a proposed contract value of $10,000 or more.
- A subcontractor selected to perform work on a construction project funded or assisted by the City of New York with a proposed contract value of $750,000 or more.
- A subcontractor selected to perform work on a construction project funded or assisted by the City of New York with a proposed contract value of less than $750,000 must submit a "Less than $750,000" certificate.

WHERE TO FILE

Employment Reports must be filed with the City agency awarding the contract. If you are a contractor or subcontractor who will be working for a private developer in receipt of funding or assistance from the City, the ER must be filed with the City agency with jurisdiction over the developer's project.

DLS REVIEW PROCESS

In accordance with Executive Order 50 (EO 50), upon receipt by DLS of a completed ER, DLS conducts a review of the contractor's current employment policies, practices and procedures, as well as perform a statistical analysis of the contractor's workforce, if necessary. The process is as follows:

1. Within five (5) business days, DLS will review the ER for completeness and accuracy. If any information is omitted or incorrect, or if necessary documents are not submitted, the submission shall be deemed incomplete and DLS will inform the contractor. The substantive compliance review does not commence until the submission is complete. **An incomplete submission will delay the review process and may preclude or interrupt the contract approval.**

2. If the ER submission is complete, the compliance review will proceed, resulting in one of the following:

   Certificate of Approval
   The contractor is found to be in compliance with all applicable laws and regulations. The approval is valid for 36 months.

   Continued Approval Certificate
   The contractor has been issued a Certificate of Approval in the previous 36 months which is good for the applicable contract.

   Conditional Certificate of Compliance
   The contractor is required to take corrective actions in order to be in compliance with EO 50. The contractor must meet the conditions within one month of the issue of the Conditional Certificate.

   Determination of Nonperformance
   The contractor has failed to take the required corrective actions stipulated in the Conditional Certificate. A determination of nonperformance may prevent a contractor from receiving an award of a contract.

HOW TO COMPLETE THE EMPLOYMENT REPORT

Contents

General Information
Part I: Contractor/Subcontractor Information
Part II: Employment Policies and Practices
Part III: Contract Bid Information and Projected and Current Workforce Forms
Signature Page

PART I: CONTRACTOR/SUBCONTRACTOR INFORMATION

Questions 7 – 11: Please provide the required contact information for your company. All contracts must have a designated Equal Employment Officer.

Question 12: If you are a subcontractor, you must state the name of the contractor for whom you are providing the construction services.

Question 13: Please provide the number of permanent employees in your company.

Question 14a-g: The Project Identification Number (PIN) and the Contract Registration ID Number (CT#) can be obtained from the City agency. Provide a description of the trade work you will perform on this project and the address where the work will be performed. Subcontractors can obtain this information from the contract they have with the prime contractor.

Questions 15 – 18: If your company has received a valid Certificate of Approval within the past 36 months, been audited by the United States Department of Labor, Office of Federal Contract Compliance Programs (OFCCP), or if your company has submitted an ER for a different contract for which you have not yet received a compliance certificate, then you only need to complete and submit the following:

- General Information section
- Part I - Contractor/Subcontractor Information
- Form B - Projected Workforce
- Signature Page

If your company is currently waiting for an approval on another contract previously submitted, be certain to identify the date on which you submitted the completed Employment Report, the name of the City contracting agency with which the contract was made, and the name and telephone number of the person to whom the Employment Report was submitted.

If your company was issued a Conditional Certificate of Approval, all required corrective actions must have been taken or DLS will not issue a Continued Certificate.

Question 18: If the company was audited by the OFCCP, also provide the following:

- Identify the reviewing OFCCP office by its name and address
- If an unconditional certificate of compliance was issued by the OFCCP, attach a copy of the certificate in lieu of completing Parts II and III;
- Include copies of all corrective actions and documentation of OFCCP's performance; and
- Provide a copy of all stated OFCCP findings.

Question 19: Please provide a copy of any Collective Bargaining Agreement(s) which is negotiated through an employer trade association on behalf of your organization or any of its affiliates.

PART II: EMPLOYMENT POLICIES AND PRACTICES

Remember to label all documents with the question number for which they are submitted.

Questions 20a – j: You must respond to the questions as to whether or not your firm has documents reflecting written policies, benefits and procedures. If so, then you must identify by name each document in which the policy(ies), procedure(s) and benefit(s) is located and submit copies of all of the document(s). If your firm follows unwritten practices or procedures, include an explanation of how they operate. Please submit the most current document(s), including all applicable amendments. Label each document and/or unwritten practice according to the question to which it corresponds (e.g. 20a, 20b, etc.)

Questions 21a – h: Inquires about the manner/methods by which you comply with the requirements of the Immigration Reform and Control Act of 1986 (IRCA).

Question 22: Inquires into where and how I-9 forms are maintained and stored.

Questions 23a – e: Inquires into whether or not there is a requirement that an applicant or employee be subjected to a medical examination at any given time. Copes of the medical information questionnaire and instructions must be submitted with the Employment Report.

Question 24: Indicate the existence and location of all statements of your firm's Equal Employment Opportunity policy and attach a copy of each statement.

Question 25: Submit any current Affirmative Action Plan(s) created pursuant to Executive Order 11246.

Question 26: If your firm or collective bargaining agreement has an internal grievance procedure, indicate this and submit a copy of the policy and procedure. If unwritten, explain its nature and operation. Explain how your firm's procedure addresses EEO complaints.

Question 27: If your employees have used the procedure in the last three (3) years, please submit an explanation in the format indicated below:

1. Number of complaint(s)	2. Nature of the complaint(s)	3. Position(s) of the complainant(s)	4. Was an investigation conducted? Y/N	5. Current status of the disposition

Question 28: Indicate whether in the past three (3) years complaints have been filed with a court of law or administrative agency, naming your company as a defendant (or respondent) in a complaint alleging violation of any anti-discrimination or affirmative action laws. If yes, develop and submit a log to show, for each administrative/and or judicial action filed, the following information:

1. Name(s) of complainant(s)	2. Administrative agency or court in which action was filed	3. Nature of the complaint(s)	4. Current status	5. If not pending, the complaint's disposition

Question 29: Identify each job for which a physical qualification exists. Identify and explain the physical qualification(s) for each stated job. Submit job descriptions for each job and the reasons for the qualifications.

Question 30: Identify each job for which there exists any qualification related to age, race, color, national origin, sex, creed, disability, marital status, sexual orientation or citizenship status. Identify and explain the specific related qualification for each job stated. Submit job descriptions for each job and the reasons for the qualifications.

PART III: CONTRACT BID INFORMATION AND PROJECTED AND CURRENT WORKFORCE FORMS

FORM A: CONTRACT BID INFORMATION – USE OF SUBCONTRACTORS/TRADES

Your projections for the utilization of subcontractors on the proposed contract are to be provided in this section. A chart has been provided for the identification of subcontractors. Information is to be provided to the extent known at the time the ER is filed for review by DLS. If the subcontractor's name is unknown, then write "unknown". Under "ownership", enter the appropriate race/ethnic and gender code. If the contract is federally funded or assisted and the subcontractor is being utilized in accordance with applicable federal requirements with respect to Minority Business Enterprise or Woman Business Enterprise requirements, enter the appropriate code. This will also apply to state funded contracts with similar requirements for minority and female owned businesses.

FORM B: PROJECTED WORKFORCE FOR WORK TO BE PERFORMED ON THIS PROJECT

For each trade to be engaged by your company for this project, enter the projected workforce for Males and Females by trade classification in the charts provided.

FORM C: CURRENT WORKFORCE FOR WORK TO BE PERFORMED ON THIS PROJECT

For each trade *currently* engaged by your company for all work performed in NYC, enter the current workforce for Males and Females by trade classification in the charts provided.

SIGNATURE PAGE

The signatory of this Employment Report and all other documents submitted to DLS must be an official authorized to enter into a binding legal agreement. The signature page must be completed in its entirety and notarized. Only original signatures will be accepted.

The City of New York Department of Small Business Services
Division of Labor Services Contract Compliance Unit
110 William Street, New York, New York 10038
Phone: (212) 513 – 6323
Fax: (212) 618-8879
CONSTRUCTION EMPLOYMENT REPORT

GENERAL INFORMATION

1. Your contractual relationship in this contract is: Prime contractor_x_ Subcontractor____

1a. Are M/WBE goals attached to this project? Yes ____ No ____

2. Please check one of the following if your firm would like information on how to certify with the City of New York as a:

___Minority Owned Business Enterprise
___Women Owned Business Enterprise
___Disadvantaged Business Enterprise
___Locally Based Business Enterprise
___Emerging Business Enterprise

2a. If you are certified as an **MBE**, **WBE**, **LBE, EBE** or **DBE**, what city/state agency are you certified with? _____ Are you DBE certified? Yes ____ No ____

3. Please indicate if you would like assistance from SBS in identifying certified M/WBEs for contracting opportunities: Yes___ No___

4. Is this project subject to a project labor agreement? Yes ____ No ____

5. Are you a Union contractor? Yes ____ No ____ If yes, please list which local(s) you affiliated with _____

6. Are you a Veteran owned company? Yes ____ No ____

PART I: CONTRACTOR/SUBCONTRACTOR INFORMATION

7. _____
Employer Identification Number or Federal Tax I.D. Email Address

8. _____
Company Name

9. _____
Company Address and Zip Code

10. _____
Chief Operating Officer Telephone Number

11. _____
Designated Equal Opportunity Compliance Officer Telephone Number
(If same as Item #10, write "same")

12. _____
Name of Prime Contractor and Contact Person
(If same as Item #8, write "same")

13. Number of employees in your company: _____

14. Contract information:

(a) _____ Contracting Agency (City Agency)

(b) _____ Contract Amount

(c) _____ Procurement Identification Number (PIN)

(d) _____ Contract Registration Number (CT#)

(e) _____ Projected Commencement Date

(f) _____ Projected Completion Date

(g) Description and location of proposed contract:

_____

_____

15. Has your firm been reviewed by the Division of Labor Services (DLS) within the past 36 months and issued a Certificate of Approval? Yes___ No___

If yes, attach a copy of certificate.

16. Has DLS within the past month reviewed an Employment Report submission for your company and issued a Conditional Certificate of Approval? Yes___ No___

If yes, attach a copy of certificate.

NOTE: DLS WILL NOT ISSUE A CONTINUED CERTIFICATE OF APPROVAL IN CONNECTION WITH THIS CONTRACT UNLESS THE REQUIRED CORRECTIVE ACTIONS IN PRIOR CONDITIONAL CERTIFICATES OF APPROVAL HAVE BEEN TAKEN.

17. Has an Employment Report already been submitted for a different contract (not covered by this Employment Report) for which you have not yet received compliance certificate?
Yes___ No___ If yes,

Date submitted: _____
Agency to which submitted: _____
Name of Agency Person: _____
Contract No: _____
Telephone: _____

18. Has your company in the past 36 months been audited by the United States Department of Labor, Office of Federal Contract Compliance Programs (OFCCP)? Yes___ No___

If yes,

(a) Name and address of OFCCP office.

_____

_____

(b) Was a Certificate of Equal Employment Compliance issued within the past 36 months? Yes___ No___

If yes, attach a copy of such certificate.

(c) Were any corrective actions required or agreed to? Yes___ No___

If yes, attach a copy of such requirements or agreements.

(d) Were any deficiencies found? Yes___ No___

If yes, attach a copy of such findings.

19. Is your company or its affiliates a member or members of an employers' trade association which is responsible for negotiating collective bargaining agreements (CBA) which affect construction site hiring? Yes___ No___

If yes, attach a list of such associations and all applicable CBA's.

PART II: DOCUMENTS REQUIRED

20. For the following policies or practices, attach the relevant documents (e.g., printed booklets, brochures, manuals, memoranda, etc.). If the policy(ies) are unwritten, attach a full explanation of the practices. See instructions.

___ (a) Health benefit coverage/description(s) for all management, nonunion and union employees (whether company or union administered)

___ (b) Disability, life, other insurance coverage/description

___ (c) Employee Policy/Handbook

___ (d) Personnel Policy/Manual

___ (e) Supervisor's Policy/Manual

___ (f) Pension plan or 401k coverage/description for all management, nonunion and union employees, whether company or union administered

___ (g) Collective bargaining agreement(s).

___ (h) Employment Application(s)

___ (i) Employee evaluation policy/form(s).

___ (j) Does your firm have medical and/or non-medical (i.e. education, military, personal, pregnancy, child care) leave policy?

21. To comply with the Immigration Reform and Control Act of 1986 when and of whom does your firm require the completion of an I-9 Form?

(a) Prior to job offer	Yes___ No___
(b) After a conditional job offer	Yes___ No___
(c) After a job offer	Yes___ No___
(d) Within the first three days on the job	Yes___ No___
(e) To some applicants	Yes___ No___
(f) To all applicants	Yes___ No___
(g) To some employees	Yes___ No___
(h) To all employees	Yes___ No___

22. Explain where and how completed I-9 Forms, with their supportive documentation, are maintained and made accessible.

_____

_____

23. Does your firm or any of its collective bargaining agreements require job applicants to take a medical examination? Yes___ No___

If yes, is the medical examination given:

(a) Prior to a job offer	Yes___ No___
(b) After a conditional job offer	Yes___ No___
(c) After a job offer	Yes___ No___
(d) To all applicants	Yes___ No___
(e) Only to some applicants	Yes___ No___

If yes, list for which applicants below and attach copies of all medical examination or questionnaire forms and instructions utilized for these examinations.

_____

_____

24. Do you have a written equal employment opportunity (EEO) policy? Yes___ No___

If yes, list the document(s) and page number(s) where these written policies are located.

_____

_____

25. Does the company have a current affirmative action plan(s) (AAP)

_____Minorities and Women

_____Individuals with handicaps

_____Other. Please specify _____

26. Does your firm or collective bargaining agreement(s) have an internal grievance procedure with respect to EEO complaints? Yes___ No___

If yes, please attach a copy of this policy.

If no, attach a report detailing your firm's unwritten procedure for handling EEO complaints.

27. Has any employee, within the past three years, filed a complaint pursuant to an internal grievance procedure or with any official of your firm with respect to equal employment opportunity? Yes___ No___

If yes, attach an internal complaint log. See instructions.

28. Has your firm, within the past three years, been named as a defendant (or respondent) in any administrative or judicial action where the complainant (plaintiff) alleged violation of any anti-discrimination or affirmative action laws? Yes___ No___

If yes, attach a log. See instructions.

29. Are there any jobs for which there are physical qualifications? Yes___ No___

If yes, list the job(s), submit a job description and state the reason(s) for the qualification(s).

_____

_____

30. Are there any jobs for which there are age, race, color, national origin, sex, creed, disability, marital status, sexual orientation, or citizenship qualifications? Yes___ No___

If yes, list the job(s), submit a job description and state the reason(s) for the qualification(s).

_____

_____

SIGNATURE PAGE

I, (print name of authorized official signing)_____ hereby certify that the information submitted herewith is true and complete to the best of my knowledge and belief and submitted with the understanding that compliance with New York City's equal employment requirements, as contained in Chapter 56 of the City Charter, Executive Order No. 50 (1980), as amended, and the implementing Rules and Regulations, is a contractual obligation. I also agree on behalf of the company to submit a certified copy of payroll records to the Division of Labor Services on a monthly basis.

_____
Contractor's Name

_____
Name of person who prepared this Employment Report Title

_____
Name of official authorized to sign on behalf of the contractor Title

_____
Telephone Number

_____
Signature of authorized official Date

If contractors are found to be underutilizing minorities and females in any given trade based on Chapter 56 Section 3H, the Division of Labor Services reserves the right to request the contractor's workforce data and to implement an employment program.

Contractors who fail to comply with the above mentioned requirements or are found to be in noncompliance may be subject to the withholding of final payment.

Willful or fraudulent falsifications of any data or information submitted herewith may result in the termination of the contract between the City and the bidder or contractor and in disapproval of future contracts for a period of up to five years. Further, such falsification may result in civil and/and or criminal prosecution.

To the extent permitted by law and consistent with the proper discharge of DLS' responsibilities under Charter Chapter 56 of the City Charter and Executive Order No. 50 (1980) and the implementing Rules and Regulations, all information provided by a contractor to DLS shall be confidential.

Only original signatures accepted.

Sworn to before me this _____ day of _____ 20 _____

_____
Notary Public Authorized Signature Date

FOR OFFICIAL USE ONLY: File No._____

FORM A. CONTRACT BID INFORMATION: USE OF SUBCONTRACTORS/TRADES

1. Do you plan to subcontractor work on this contract? Yes___ No___

2. If yes, complete the chart below.

NOTE: All proposed subcontractors with a subcontract in excess of $750,000 must complete an Employment Report for review and approval before the contract may be awarded and work commences.

SUBCONTRACTOR'S NAME*	OWNERSHIP (ENTER APPROPRIATE CODE LETTERS BELOW)	WORK TO BE PERFORMED BY SUBCONTRACTOR	TRADE PROJECTED FOR USE BY SUBCONTRACTOR	PROJECTED DOLLAR VALUE OF SUBCONTRACT

***If subcontractor is presently unknown, please enter the trade (craft name).**

OWNERSHIP CODES
- W: White
- B: Black
- H: Hispanic
- A: Asian
- N: Native American
- F: Female

FORM B: PROJECTED WORKFORCE

TRADE CLASSIFICATION CODES

(J) Journeylevel Workers
(A) Apprentice
(H) Helper
(TRN) Trainee
(TOT) Total by Column

For each trade to be engaged by your company for this project, enter the projected workforce for Males and Females by trade classification on the charts below.

Trade: _____

Union Affiliation, if applicable _____

Total (Col. #1-10): _____

Total Minority, Male & Female (Col. #2,3,4,5,7,8,9, & 10): _____

Total Female (Col. #6 – 10): _____

	MALES					FEMALES				
	(1) White Non Hisp.	(2) Black Non Hisp.	(3) Hisp.	(4) Asian	(5) Native Amer.	(6) White Non Hisp.	(7) Black Non Hisp.	(8) Hisp.	(9) Asian	(10) Native Amer.
J										
H										
A										
TRN										
TOT										

What are the recruitment sources for you projected hires (i.e., unions, government employment office, job tap center, community outreach)?

_____

_____

FOR OFFICIAL ONLY: File No. _____

FORM B: PROJECTED WORKFORCE

Trade: _____

Union Affiliation, if applicable _____

Total (Col. #1-10): _____

Total Minority, Male & Female (Col. #2,3,4,5,7,8,9, & 10): _____

Total Female (Col. #6 – 10): _____

	MALES					FEMALES				
	(1) White Non Hisp.	(2) Black Non Hisp.	(3) Hisp.	(4) Asian	(5) Native Amer.	(6) White Non Hisp.	(7) Black Non Hisp.	(8) Hisp.	(9) Asian	(10) Native Amer.
J										
H										
A										
TRN										
TOT										

What are the recruitment sources for you projected hires (i.e., unions, government employment office, job tap center, community outreach)?

_____

_____

FORM C: CURRENT WORKFORCE

TRADE CLASSIFICATION CODES

(J) Journeylevel Workers
(A) Apprentice
(H) Helper
(TRN) Trainee
(TOT) Total by Column

For each trade currently engaged by your company for all work performed in New York City, enter the current workforce for Males and Females by trade classification on the charts below.

Trade: _____

Union Affiliation, if applicable _____

Total (Col. #1-10): _____

Total Minority, Male & Female (Col. #2,3,4,5,7,8,9, & 10): _____

Total Female (Col. #6 – 10): _____

	MALES					FEMALES				
	(1) White Non Hisp.	(2) Black Non Hisp.	(3) Hisp.	(4) Asian	(5) Native Amer.	(6) White Non Hisp.	(7) Black Non Hisp.	(8) Hisp.	(9) Asian	(10) Native Amer.
J										
H										
A										
TRN										
TOT										

What are the recruitment sources for you projected hires (i.e., unions, government employment office, job tap center, community outreach)?

_____

_____

FORM C: CURRENT WORKFORCE

Trade:

_____

Union Affiliation, if applicable

_____

Total (Col. #1-10):

_____

Total Minority, Male & Female
(Col. #2,3,4,5,7,8,9, & 10):

_____

Total Female
(Col. #6 – 10):

_____

	MALES					FEMALES				
	(1) White Non Hisp.	(2) Black Non Hisp.	(3) Hisp.	(4) Asian	(5) Native Amer.	(6) White Non Hisp.	(7) Black Non Hisp.	(8) Hisp.	(9) Asian	(10) Native Amer.
J										
H										
A										
TRN										
TOT										

What are the recruitment sources for you projected hires (i.e., unions, government employment office, job tap center, community outreach)?

_____

_____

FOR OFFICIAL USE ONLY: File No._____

(NO TEXT ON THIS PAGE)

The City of New York Department of Small Business Services
Division of Labor Services Contract Compliance Unit
110 William Street, New York, New York 10038
Phone: (212) 513 – 6323
Fax: (212) 513-6679

CONSTRUCTION EMPLOYMENT REPORT

GENERAL INFORMATION

1. Your contractual relationship in this contract is: Prime contractor____ Subcontractor_x_

1a. Are M/WBE goals attached to this project? Yes ____ No ____

2. Please check one of the following if your firm would like information on how to certify with the City of New York as a:

___Minority Owned Business Enterprise
___Women Owned Business Enterprise
___Disadvantaged Business Enterprise
___Locally Based Business Enterprise
___Emerging Business Enterprise

2a. If you are certified as an **MBE**, **WBE**, **LBE, EBE** or **DBE**, what city/state agency are you certified with? _____ Are you DBE certified? Yes ____ No ____

3. Please indicate if you would like assistance from SBS in identifying certified M/WBEs for contracting opportunities: Yes___ No___

4. Is this project subject to a project labor agreement? Yes ____ No ____

5. Are you a Union contractor? Yes ____ No ____ If yes, please list which local(s) you affiliated with _____

6. Are you a Veteran owned company? Yes ____ No ____

PART I: CONTRACTOR/SUBCONTRACTOR INFORMATION

7. _____
Employer Identification Number or Federal Tax I.D. Email Address

8. _____
Company Name

9. _____
Company Address and Zip Code

10. _____
Chief Operating Officer Telephone Number

11. _____
Designated Equal Opportunity Compliance Officer Telephone Number
(If same as Item #10, write "same")

12. _____
Name of Prime Contractor and Contact Person
(If same as Item #8, write "same")

13. Number of employees in your company: _____

14. Contract information:

(a) _____ Contracting Agency (City Agency)

(b) _____ Contract Amount

(c) _____ Procurement Identification Number (PIN)

(d) _____ Contract Registration Number (CT#)

(e) _____ Projected Commencement Date

(f) _____ Projected Completion Date

(g) Description and location of proposed contract:

_____

_____

15. Has your firm been reviewed by the Division of Labor Services (DLS) within the past 36 months and issued a Certificate of Approval? Yes___ No___

If yes, attach a copy of certificate.

16. Has DLS within the past month reviewed an Employment Report submission for your company and issued a Conditional Certificate of Approval? Yes___ No___

If yes, attach a copy of certificate.

NOTE: DLS WILL NOT ISSUE A CONTINUED CERTIFICATE OF APPROVAL IN CONNECTION WITH THIS CONTRACT UNLESS THE REQUIRED CORRECTIVE ACTIONS IN PRIOR CONDITIONAL CERTIFICATES OF APPROVAL HAVE BEEN TAKEN.

17. Has an Employment Report already been submitted for a different contract (not covered by this Employment Report) for which you have not yet received compliance certificate?
Yes___ No___ If yes,

Date submitted: _____
Agency to which submitted: _____
Name of Agency Person: _____
Contract No: _____
Telephone: _____

18. Has your company in the past 36 months been audited by the United States Department of Labor, Office of Federal Contract Compliance Programs (OFCCP)? Yes___ No___

If yes,

(a) Name and address of OFCCP office.

_____

_____

(b) Was a Certificate of Equal Employment Compliance issued within the past 36 months? Yes___ No___

If yes, attach a copy of such certificate.

(c) Were any corrective actions required or agreed to? Yes___ No___

If yes, attach a copy of such requirements or agreements.

(d) Were any deficiencies found? Yes___ No___

If yes, attach a copy of such findings.

19. Is your company or its affiliates a member or members of an employers' trade association which is responsible for negotiating collective bargaining agreements (CBA) which affect construction site hiring? Yes___ No___

If yes, attach a list of such associations and all applicable CBA's.

PART II: DOCUMENTS REQUIRED

20. For the following policies or practices, attach the relevant documents (e.g., printed booklets, brochures, manuals, memoranda, etc.). If the policy(ies) are unwritten, attach a full explanation of the practices. See instructions.

___ (a) Health benefit coverage/description(s) for all management, nonunion and union employees (whether company or union administered)

___ (b) Disability, life, other insurance coverage/description

___ (c) Employee Policy/Handbook

___ (d) Personnel Policy/Manual

___ (e) Supervisor's Policy/Manual

___ (f) Pension plan or 401k coverage/description for all management, nonunion and union employees, whether company or union administered

___ (g) Collective bargaining agreement(s).

___ (h) Employment Application(s)

___ (i) Employee evaluation policy/form(s).

___ (j) Does your firm have medical and/or non-medical (i.e. education, military, personal, pregnancy, child care) leave policy?

21. To comply with the Immigration Reform and Control Act of 1986 when and of whom does your firm require the completion of an I-9 Form?

(a) Prior to job offer	Yes___ No___
(b) After a conditional job offer	Yes___ No___
(c) After a job offer	Yes___ No___
(d) Within the first three days on the job	Yes___ No___
(e) To some applicants	Yes___ No___
(f) To all applicants	Yes___ No___
(g) To some employees	Yes___ No___
(h) To all employees	Yes___ No___

22. Explain where and how completed I-9 Forms, with their supportive documentation, are maintained and made accessible.

_____
_____

23. Does your firm or any of its collective bargaining agreements require job applicants to take a medical examination? Yes___ No___

If yes, is the medical examination given:

(a) Prior to a job offer	Yes___ No___
(b) After a conditional job offer	Yes___ No___
(c) After a job offer	Yes___ No___
(d) To all applicants	Yes___ No___
(e) Only to some applicants	Yes___ No___

If yes, list for which applicants below and attach copies of all medical examination or questionnaire forms and instructions utilized for these examinations.

_____
_____

24. Do you have a written equal employment opportunity (EEO) policy? Yes___ No___

If yes, list the document(s) and page number(s) where these written policies are located.

_____
_____

25. Does the company have a current affirmative action plan(s) (AAP)
_____Minorities and Women
_____Individuals with handicaps
_____Other. Please specify _____

26. Does your firm or collective bargaining agreement(s) have an internal grievance procedure with respect to EEO complaints? Yes___ No___

If yes, please attach a copy of this policy.

If no, attach a report detailing your firm's unwritten procedure for handling EEO complaints.

27. Has any employee, within the past three years, filed a complaint pursuant to an internal grievance procedure or with any official of your firm with respect to equal employment opportunity? Yes___ No___

If yes, attach an internal complaint log. See instructions.

28. Has your firm, within the past three years, been named as a defendant (or respondent) in any administrative or judicial action where the complainant (plaintiff) alleged violation of any anti-discrimination or affirmative action laws? Yes___ No___

If yes, attach a log. See instructions.

29. Are there any jobs for which there are physical qualifications? Yes___ No___

If yes, list the job(s), submit a job description and state the reason(s) for the qualification(s).

_____

_____

30. Are there any jobs for which there are age, race, color, national origin, sex, creed, disability, marital status, sexual orientation, or citizenship qualifications? Yes___ No___

If yes, list the job(s), submit a job description and state the reason(s) for the qualification(s).

_____

_____

SIGNATURE PAGE

I, (print name of authorized official signing)_____ hereby certify that the information submitted herewith is true and complete to the best of my knowledge and belief and submitted with the understanding that compliance with New York City's equal employment requirements, as contained in Chapter 56 of the City Charter, Executive Order No. 50 (1980), as amended, and the implementing Rules and Regulations, is a contractual obligation. I also agree on behalf of the company to submit a certified copy of payroll records to the Division of Labor Services on a monthly basis.

_____

Contractor's Name

_____

Name of person who prepared this Employment Report Title

_____

Name of official authorized to sign on behalf of the contractor Title

_____

Telephone Number

_____

Signature of authorized official Date

If contractors are found to be underutilizing minorities and females in any given trade based on Chapter 56 Section 3H, the Division of Labor Services reserves the right to request the contractor's workforce data and to implement an employment program.

Contractors who fail to comply with the above mentioned requirements or are found to be in noncompliance may be subject to the withholding of final payment.

Willful or fraudulent falsifications of any data or information submitted herewith may result in the termination of the contract between the City and the bidder or contractor and in disapproval of future contracts for a period of up to five years. Further, such falsification may result in civil and/and or criminal prosecution.

To the extent permitted by law and consistent with the proper discharge of DLS' responsibilities under Charter Chapter 56 of the City Charter and Executive Order No. 50 (1980) and the implementing Rules and Regulations, all information provided by a contractor to DLS shall be confidential.

Only original signatures accepted.

Sworn to before me this _____ day of _____ 20 _____

_____

Notary Public Authorized Signature Date

FORM A. CONTRACT BID INFORMATION: USE OF SUBCONTRACTORS/TRADES

1. Do you plan to subcontractor work on this contract? Yes___ No___

2. If yes, complete the chart below.

NOTE: All proposed subcontractors with a subcontract in excess of $750,000 must complete an Employment Report for review and approval before the contract may be awarded and work commences.

SUBCONTRACTOR'S NAME*	OWNERSHIP (ENTER APPROPRIATE CODE LETTERS BELOW)	WORK TO BE PERFORMED BY SUBCONTRACTOR	TRADE PROJECTED FOR USE BY SUBCONTRACTOR	PROJECTED DOLLAR VALUE OF SUBCONTRACT

***If subcontractor is presently unknown, please enter the trade (craft name).**

OWNERSHIP CODES
- W: White
- B: Black
- H: Hispanic
- A: Asian
- N: Native American
- F: Female

FORM B: PROJECTED WORKFORCE

TRADE CLASSIFICATION CODES

(J) Journeylevel Workers
(A) Apprentice
(H) Helper
(TRN) Trainee
(TOT) Total by Column

For each trade to be engaged by your company for this project, enter the projected workforce for Males and Females by trade classification on the charts below.

Trade: _____

Union Affiliation, if applicable _____

Total (Col. #1-10): _____

Total Minority, Male & Female (Col. #2,3,4,5,7,8,9, & 10): _____

Total Female (Col. #6 – 10): _____

	MALES					FEMALES				
	(1) White Non Hisp.	(2) Black Non Hisp.	(3) Hisp.	(4) Asian	(5) Native Amer.	(6) White Non Hisp.	(7) Black Non Hisp.	(8) Hisp.	(9) Asian	(10) Native Amer.
J										
H										
A										
TRN										
TOT										

What are the recruitment sources for you projected hires (i.e., unions, government employment office, job tap center, community outreach)?

_____

_____

FOR OFFICIAL ONLY: File No. _____

FORM B: PROJECTED WORKFORCE

Trade: _____

Union Affiliation, if applicable _____

Total (Col. #1-10): _____

Total Minority, Male & Female (Col. #2,3,4,5,7,8,9, & 10): _____

Total Female (Col. #6 – 10): _____

	MALES					FEMALES				
	(1) White Non Hisp.	(2) Black Non Hisp.	(3) Hisp.	(4) Asian	(5) Native Amer.	(6) White Non Hisp.	(7) Black Non Hisp.	(8) Hisp.	(9) Asian	(10) Native Amer.
J										
H										
A										
TRN										
TOT										

What are the recruitment sources for you projected hires (i.e., unions, government employment office, job tap center, community outreach)?

_____

_____

FORM C: CURRENT WORKFORCE

TRADE CLASSIFICATION CODES

(J) Journeylevel Workers
(H) Helper
(TOT) Total by Column
(A) Apprentice
(TRN) Trainee

For each trade currently engaged by your company for all work performed in New York City, enter the current workforce for Males and Females by trade classification on the charts below.

Trade: _____

Union Affiliation, if applicable _____

Total (Col. #1-10): _____

Total Minority, Male & Female (Col. #2,3,4,5,7,8,9, & 10): _____

Total Female (Col. #6 – 10): _____

	MALES					FEMALES				
	(1) White Non Hisp.	(2) Black Non Hisp.	(3) Hisp.	(4) Asian	(5) Native Amer.	(6) White Non Hisp.	(7) Black Non Hisp.	(8) Hisp.	(9) Asian	(10) Native Amer.
J										
H										
A										
TRN										
TOT										

What are the recruitment sources for you projected hires (i.e., unions, government employment office, job tap center, community outreach)?

_____

_____

FOR OFFICIAL USE ONLY: File No. _____

FORM C: CURRENT WORKFORCE

Trade:

_____

Union Affiliation, if applicable

_____

Total (Col. #1-10):

_____

Total Minority, Male & Female (Col. #2,3,4,5,7,8,9, & 10):

_____

Total Female (Col. #6 – 10):

_____

	MALES					FEMALES				
	(1) White Non Hisp.	(2) Black Non Hisp.	(3) Hisp.	(4) Asian	(5) Native Amer.	(6) White Non Hisp.	(7) Black Non Hisp.	(8) Hisp.	(9) Asian	(10) Native Amer.
J										
H										
A										
TRN										
TOT										

What are the recruitment sources for you projected hires (i.e., unions, government employment office, job tap center, community outreach)?

_____

_____

FOR OFFICIAL USE ONLY: File No._____

(NO TEXT ON THIS PAGE)

The City of New York Department of Small Business Services
Division of Labor Services Contract Compliance Unit
110 William Street, New York, New York 10038
Phone: (212) 513 - 6323 Fax: (212) 618-8879

Date _____ File Number _____

LESS THAN $750,000 SUBCONTRACT CERTIFICATE
(CITY, STATE AND YDP ONLY)

Are you currently certified as one of the following? Please check yes or no:

MBE Yes ___No ___ WBE Yes ___No ___ LBE Yes ___No ___

DBE Yes___No___ EBE Yes ___ No ___

If you are certified as an MBE, WBE, LBE, EBE or DBE, what city/state agency are you certified with?

_____

Please check one of the following if your firm would like information on how to certify with the City of New York as a:

___Minority Owned Business Enterprise ___Locally based Business Enterprise

___Women Owned Business Enterprise ___Emerging Business Enterprise

___Disadvantaged Business Enterprise

_____
Company Name Employer Identification Number or Federal Tax I.D

_____
Company Address and Zip Code

_____
Contact Person (First Name, Last Name) Telephone Number

_____
Fax Number E-mail Address

Description and location of proposed subcontract:_____
_____
_____

Are you a Union contractor? Yes ____ No ____ If yes, please list which local(s) you affiliated with

_____

Are you a Veteran owned company? Yes ____ No ____

_____ _____
Procurement Identification Number (PIN) Contract Registration Number (CT#)
(City contracts only) (City contracts only)

FOR OFFICIAL USE ONLY: File No._____

Block and Lot Number
(ICIP projects only)

Contract Amount

I, (print name of authorized official signing)_____ hereby certify that I am authorized by the above-named subcontractor to certify that said subcontractor's proposed contract with the above named owner or City agency is less than $750,000. This affirmation is made in accordance with NYC Charter Chapter 56, Executive Order No. 50 (1980) and the implementing Rules.

Willful or fraudulent falsifications of any data or information submitted herewith may result in the termination of the contract between the City and the bidder or contractor and in disapproval of future contracts for a period of up to five years. Further, such falsification may result in civil and/and or criminal prosecution.

Signature of authorized official

Date

Only original signatures accepted.

Sworn to before me this _____ day of _____ 20 _____

Notary Public

Authorized Signature

Date

Department of Design and Construction

INFRASTRUCTURE DIVISION
BUREAU OF DESIGN

VOLUME 1 OF 3

PROJECT ID: QED1007

FOR THE CONSTRUCTION OF TRUNK AND DISTRIBUTION WATER MAINS IN ARVERNE BOULEVARD BETWEEN BEACH 59TH STREET AND BEACH 54TH STREET; ROCKAWAY BEACH BOULEVARD BETWEEN BEACH 54TH STREET AND BEACH 49TH STREET; BEACH 67TH STREET BETWEEN ROCKAWAY FREEWAY AND ROCKAWAY BEACH BOULEVARD; ROCKAWAY BEACH BOULEVARD BETWEEN BEACH 54TH STREET AND BEACH 53RD STREET; AND ROCKAWAY BEACH BOULEVARD BETWEEN BEACH 52ND STREET AND BEACH 49TH STREET

INCLUDING STORM AND SANITARY SEWER WORK

Together With All Work Incidental Thereto
BOROUGH OF QUEENS
CITY OF NEW YORK

_____
Contractor

_____

Dated_____, **20**___

_____

Department of Design and Construction

THE CITY OF NEW YORK
DEPARTMENT OF DESIGN AND CONSTRUCTION
DIVISION OF INFRASTRUCTURE

30-30 THOMSON AVENUE
LONG ISLAND CITY, NEW YORK 11101-3045
TELEPHONE (718) 391-1000
WEBSITE www.nyc.gov/buildnyc

VOLUME 2 OF 3

INFORMATION FOR BIDDERS
CONTRACT
PERFORMANCE AND PAYMENT BONDS
PREVAILING WAGE SCHEDULE

FOR FURNISHING ALL LABOR AND MATERIALS NECESSARY AND REQUIRED FOR:

PROJECT ID: QED1007

FOR THE CONSTRUCTION OF TRUNK AND DISTRIBUTION WATER MAINS IN ARVERNE BOULEVARD BETWEEN BEACH 59TH STREET AND BEACH 54TH STREET; ROCKAWAY BEACH BOULEVARD BETWEEN BEACH 54TH STREET AND BEACH 49TH STREET; BEACH 67TH STREET BETWEEN ROCKAWAY FREEWAY AND ROCKAWAY BEACH BOULEVARD; ROCKAWAY BEACH BOULEVARD BETWEEN BEACH 54TH STREET AND BEACH 53RD STREET; AND ROCKAWAY BEACH BOULEVARD BETWEEN BEACH 52ND STREET AND BEACH 49TH STREET

INCLUDING STORM AND SANITARY SEWER WORK

Together With All Work Incidental Thereto
BOROUGH OF QUEENS
CITY OF NEW YORK

FOR THE DEPARTMENT OF ENVIRONMENTAL PROTECTION
PREPARED BY
IN-HOUSE DESIGN

June 23, 2015

15-190

Department of Design and Construction

THE CITY OF NEW YORK
DEPARTMENT OF DESIGN AND CONSTRUCTION
DIVISION OF INFRASTRUCTURE

30-30 THOMSON AVENUE
LONG ISLAND CITY, NEW YORK 11101-3045
TELEPHONE (718) 391-1000
WEBSITE www.nyc.gov/buildnyc

VOLUME 2 OF 3

INFORMATION FOR BIDDERS
CONTRACT
PERFORMANCE AND PAYMENT BONDS
PREVAILING WAGE SCHEDULE

FOR FURNISHING ALL LABOR AND MATERIALS NECESSARY AND REQUIRED FOR:

FOR THE DEPARTMENT OF ENVIRONMENTAL PROTECTION
PREPARED BY
IN-HOUSE DESIGN

June 23, 2015

NOTICE TO BIDDERS

Please be advised that the City of New York has issued a new Standard Construction Contract. The new Contract, which is incorporated in this bid, is significantly different from the 2008 version previously used by the City. A listing of some of the significant changes is provided below. This notice is only a partial listing. Please refer to the Contract itself for a full understanding of the changes and the actual text of the changes that were made. The text of the revised Standard Construction Contract is the controlling document should there be any discrepancies between this notice and the Standard Construction Contract.

Significant changes include the following:

ARTICLE 11 DAMAGES CAUSED BY DELAYS

In 2008, the City embarked on a pilot project to test the use of new construction contract language altering the allocation of the risk of project delays, as between the City and the contractor. The City has determined to make the pilot project language the standard language for all City construction contracts. Accordingly, there is now one Standard City Construction Contract that is to be used by all agencies for all bids released after the release of the new contract. The damages for delay language is Article 11. Please note that changes have been made to the damages for delay provisions from the pilot to the adopted version.

ARTICLE 22 INSURANCE

Changes have been made to the insurance provisions, including incorporating requirements that the insurance provided comply with recent NYC Department of Buildings regulations specifying required dollar limits for CGL insurance for certain projects and requiring proof of builder's risk insurance prior to Work commencing rather than within 10 days of award.

ARTICLE 26 EXTRA WORK

The percentage paid for overhead for Extra Work pursuant to Section 26.1.11 is increased from 10% to 12% and the calculation of Worker's Compensation insurance costs reimbursed for Extra Work has been clarified.

ARTICLE 37 LABOR LAW REQUIREMENTS
ARTICLE 38 PAYROLL REPORTS

The provisions governing Labor Law provisions have been tightened, including requirements the employee identification cards include a photo (unless the requirement is waived), a prohibition on cash payments to employees and subcontractors, and clear enforcement authority requirements.

ARTICLE 70 ELECTRONIC FILING

A provision is added to make mandatory the electronic filing of certain alteration permits with the Department of Buildings.

Other significant changes include the following:

ARTICLE 7 INDEMNIFICATION

Changes have been made to the indemnification provisions.

ARTICLE14 FINAL ACCEPTANCE OF WORK
ARTICLE 44 SUBSTANTIAL COMPLETION PAYMENT

The Commissioner is no longer required to issue a substantial completion determination in addition to the already existing requirement that the Engineer issue a substantial completion determination and reach an agreement on a punch list of remaining work. Now, the Engineer, when issuing the punch list to the Contractor, must also include a proposed schedule for the completion of the punch list. The Contractor may propose an alternative schedule that is subject to the approval of the Engineer. If the Contractor fails to respond to the Engineer's proposed schedule, the Engineer's schedule is deemed accepted.

ARTICLE 15 LIQUIDATED DAMAGES

The contract is revised to match Schedule A to provide that liquidated damages are available only until substantial completion.

ARTICLE 17 SUBCONTRACTS

The requirements for prior approval of subcontractors, and for contractors to be responsible for the actions of their subcontractors, have been tightened. The requirement that the Contractor list subcontractors in the City's Payee Information Portal has been added; the provision was previously attached as a rider.

ARTICLE 19 SECURITY DEPOSIT

The provisions governing the return of bid deposits are clarified.

ARTICLE 20 PAYMENT GUARANTEE

The Payment Guaranty provisions, which apply when the City does not require the Contractor to obtain payment bonds, has been significantly revised to track the requirements of State Finance law 137.

ARTICLE 28 RECORDKEEPING FOR EXTRA OR DISPUTED WORK

The recordkeeping requirement that currently apply to payments for Time & Materials for extra work are expressly made applicable to regular work that is paid for on a T & M basis.

ARTICLE 35 EMPLOYEES

The whistleblower provisions of local law are added to the construction contract. They previously have been attached as a rider.

ARTICLE 38 PAYROLL REPORTS
ARTICLE 77 RECORDS RETENTION

Requirements that records be maintained for six years and directions on how such records must be made available.

ARTICLE 42 PARTIAL PAYMENTS

Increased flexibility has been provided for when contractors may submit invoices.

ARTICLE 62 TAX EXEMPTION

The provisions identifying the State tax exemption for municipalities are revised to more clearly describe State law.

(NO TEXT ON THIS PAGE)

NEW YORK CITY STANDARD CONSTRUCTION CONTRACT (DEC. 2013)
INSURANCE RIDER

The following provisions supersede the corresponding provisions in the December 2013 version of the New York City Standard Construction Contract:

1. Section 22.1.1(c) provides as follows:

   22.1.1(c) If the **Work** requires a permit from the Department of Buildings pursuant to 1 RCNY Section 101-08, the **Contractor** shall provide Commercial General Liability Insurance with limits of at least those required by 1 RCNY section 101-08 or greater limits provided by the Agency in Schedule A. If the Work does not require such a permit, the minimum limits shall be those provided for in Schedule A.

2. Section 22.3.3 provides as follows:

   22.3.3 For policies provided pursuant to all of Article 22.1 other than Article 22.1.2, the **Contractor** shall submit one or more Certificates of Insurance on forms acceptable to the **Commissioner**. All such Certificates of Insurance shall certify (a) the issuance and effectiveness of such policies of insurance, each with the specified minimum limits (b) for insurance secured pursuant to Article 22.1.1 that the **City** and any other entity specified in Schedule A is an Additional Insured thereunder; (c) in the event insurance is required pursuant to Article 22.1.6 and/or Article 22.1.7, that the City is an Additional Insured thereunder; and (d) the company code issued to the insurance company by the National Association of Insurance Commissioners (the NAIC number). All such Certificates of Insurance shall be accompanied by the required additional insured endorsements and either a duly executed "Certification by Insurance Broker or Agent" in the form contained in Part III of Schedule A or copies of all policies referenced in such Certificate of Insurance as certified by an authorized representative of the issuing insurance carrier. If any policy is not available at the time of submission, certified binders may be submitted until such time as the policy is available, at which time a certified copy of the policy shall be submitted.

(NO TEXT ON THIS PAGE)

CITY OF NEW YORK

DEPARTMENT OF
DESIGN AND CONSTRUCTION
DIVISION OF INFRASTRUCTURES

INFORMATION FOR BIDDERS

JUNE 2015

(NO TEXT ON THIS PAGE)

CITY OF NEW YORK CITY
DEPARTMENT OF DESIGN AND CONSTRUCTION
INFORMATION FOR BIDDERS

TABLE OF CONTENTS

SECTION 1.	DESCRIPTION AND LOCATION OF WORK	1
SECTION 2.	TIME AND PLACE FOR RECEIPT OF BIDS	1
SECTION 3.	DEFINITIONS	1
SECTION 4.	INVITATION FOR BIDS AND CONTRACT DOCUMENTS	1
SECTION 5.	PRE-BID CONFERENCE	2
SECTION 6.	AGENCY CONTACT	2
SECTION 7.	BIDDER'S OATH	2
SECTION 8.	EXAMINATION AND VIEWING OF SITE, CONSIDERATION OF OTHER SOURCES OF INFORMATION AND CHANGED CONDITIONS	2
SECTION 9.	EXAMINATION OF PROPOSED CONTRACT	3
SECTION 10.	FORM OF BID	3
SECTION 11.	IRREVOCABILITY OF BID	3
SECTION 12.	ACKNOWLEDGMENT OF AMENDMENTS	4
SECTION 13.	BID SAMPLES AND DESCRIPTIVE LITERATURE	4
SECTION 14.	PROPRIETARY INFORMATION/TRADE SECRETS	4
SECTION 15.	PRE-OPENING MODIFICATION OR WITHDRAWAL OF BIDS	4
SECTION 16.	BID EVALUATION AND AWARD	4
SECTION 17.	LATE BIDS, LATE WITHDRAWALS AND LATE MODIFICATIONS	5
SECTION 18.	WITHDRAWAL OF BIDS.	5
SECTION 19.	MISTAKE IN BIDS	5
SECTION 20.	LOW TIE BIDS	6
SECTION 21.	REJECTION OF BIDS	6
SECTION 22.	RIGHT TO APPEAL DETERMINATIONS OF NON-RESPONSIVENESS OR NON-RESPONSIBILITY AND RIGHT TO PROTEST SOLICITATIONS AND AWARD	7
SECTION 23.	AFFIRMATIVE ACTION AND EQUAL EMPLOYMENT OPPORTUNITY	7
SECTION 24.	VENDEX QUESTIONNAIRES	7
SECTION 25.	COMPLAINTS ABOUT THE BID PROCESS	8
SECTION 26.	BID, PERFORMANCE AND PAYMENT SECURITY	8
SECTION 27.	FAILURE TO EXECUTE CONTRACT	9
SECTION 28.	BIDDER RESPONSIBILITIES AND QUALIFICATIONS	9
SECTION 29.	EMPLOYMENT REPORT	10
SECTION 30.	LABOR LAW REQUIREMENTS	10
SECTION 31.	INSURANCE	10
SECTION 32.	LUMP SUM CONTRACTS	11
SECTION 33.	UNIT PRICE CONTRACTS	11
SECTION 34.	EXCISE TAX	11
SECTION 35.	LICENSES AND PERMITS	11
SECTION 36.	MULTIPLE PRIME CONTRACTORS	11
SECTION 37.	LOCALLY BASED ENTERPRISE REQUIREMENTS (LBE)	12
SECTION 38.	BID SUBMISSION REQUIREMENTS	13
SECTION 39.	COMPTROLLER'SCERTIFICATE	14
SECTION 40.	PROCUREMENT POLICY BOARD RULES	14
SECTION 41.	DDC SAFETY REQUIREMENTS	14

(NO TEXT ON THIS PAGE)

INFORMATION FOR BIDDERS

1. Description and Location of Work

The description and location of the work for which bids are requested are specified in Attachment 1, "Bid Information". Attachment 1 is included as page A-l of the Bid Booklet.

2. Time and Place for Receipt of Bids

Sealed bids shall be received on or before the date and hour specified in Attachment 1, at which time they will be publicly opened and read aloud in the presence of the Commissioner or his or her representative, and any bidders who may desire to be present.

3. Definitions

The definitions set forth in the Procurement Policy Board Rules shall apply to this Invitation For Bids.

4. Invitation For Bids and Contract Documents

(A) Except for titles, sub-titles, headings, running headlines, tables of contents and indices (all of which are printed herein merely for convenience) the following, except for such portions thereof as may be specifically excluded, shall be deemed to be part of the Contract and the Invitation for Bids.

(1) All provisions required by law to be inserted in this Contract, whether actually inserted or not
(2) The Contract Drawings and Specifications
(3) The General Conditions, the General Requirements and the Special Conditions, if any
(4) The Contract
(5) The Information for Bidders; Request for Proposals; Notice of Solicitation and Proposal For Bids; Bid or Proposal, and, if used, the Bid Booklet
(6) The Budget Director's Certificate; all Addenda issued prior to the receipt of the bids; the Notice of Award; Performance and Payment Bonds, if required; and the Notice to Proceed with the Work.

(B) For particulars as to this procurement, including quantity and quality of the purchase, extent of the work or labor to be performed, delivery and performance schedule, and any other special instructions, prospective bidders are referred to the Invitation For Bids Documents. A copy of such documents can be obtained at the location set forth in Attachment 1.

(C) Deposit for Copy of Invitation For Bids Documents: Prospective bidders may obtain a copy of the Invitation For Bids Documents by complying with the conditions set forth in the Notice of Solicitation. The deposit must be in the form of a check or money order made payable to the City of New York, and drawn upon a state or national bank or trust company, or a check of such bank or trust company signed by a duly authorized officer thereof.

(D) Return of Invitation For Bids Documents: All Invitation For Bids Documents must be returned to the Department upon request. If the bidder elects not to submit a bid thereunder, the

Invitation For Bids Documents shall be returned to the Department, along with a statement that no bid will be submitted.

(E) Return of Deposit: Such deposit will be returned within 30 days after the award of the contract or the rejection of all bids as set forth in the advertisement, provided the Invitation For Bids Documents are returned to the location specified in Attachment 1, in physical condition satisfactory to the Commissioner.

(F) Additional Copies: Additional copies of the Invitation For Bids Documents may be obtained, subject to the conditions set forth in the advertisement for bids.

5. Pre-Bid Conference

A pre-bid conference shall be held as set forth in Attachment 1. Nothing stated at the pre-bid conference shall change the terms or conditions of the Invitation For Bids Documents, unless a change is made by written amendment as provided in Section 9 below. Failure to attend a mandatory pre-bid conference shall constitute grounds for the rejection of the bid.

6. Agency Contact

Any questions or correspondence relating to this bid solicitation shall be addressed to the Agency Contact person specified in Attachment 1.

7. Bidder's Oath

(A) The bid-shall be properly signed by an authorized representative of the bidder and the bid shall be verified by the written oath of the authorized representative who signed the bid, that the several matters stated and information furnished therein are in all aspects true.

(B) A materially false statement willfully or fraudulently made in connection with the bid or any of the forms completed and submitted with the bid may result in the termination of any Contract between the City and the Bidder. As a result, the Bidder may be barred from participating in future City contracts as well as be subject to possible criminal prosecution.

8. Examination and Viewing of Site

(A) Pre-Bidding (Investigation) Viewing of Site -Bidders must carefully view and examine the site of the proposed work, as well as its adjacent area, and seek other usual sources of information, for they will be conclusively presumed to have full knowledge of any and all conditions on, about or above the site relating to or affecting in any way the performance of the work to be done under the Contract which were or should have been indicated to a reasonably prudent bidder. To arrange a date for visiting the work site, bidders are to contact the Agency Contact person specified in Attachment 1.

(B) Should the contractor encounter during the progress of the work subsurface conditions at the site materially differing from any shown on the Contract Drawings or indicated in the Specifications or such subsurface conditions as could not reasonably have been anticipated by the contractor and were not anticipated by the City, which conditions will materially affect the cost of the work to be done under the

Contract, the attention of the Commissioner must be called immediately to such conditions before they are disturbed. The Commissioner shall thereupon promptly investigate the conditions. If he finds that they do so materially differ, or that they could not have been reasonably anticipated by the contractor and were not anticipated by the City, the Contract may be modified with his written approval.

9. Examination of Proposed Contract

(A) Request for Interpretation or Correction: Prospective bidders must examine the Contract Documents carefully and before bidding must request the Commissioner in writing for an interpretation or correction of every patent ambiguity, inconsistency or error therein which should have been discovered by a reasonably prudent bidder. Such interpretation or correction, as well as any additional contract provisions the Commissioner may decide to include, will be issued in writing by the Commissioner as an addendum to the Contract, which will be transmitted to each person recorded as having received a copy of the Contract Documents from the Department. Transmission of such addendum will be by mail, e-mail, facsimile or hand delivery. Such addendum will also be posted at the place where the Contract Documents are available for the inspection of prospective bidders. Upon transmission as provided for herein, such addendum shall become a part of the Contract Documents, and binding on all bidders, whether or not actual notice of such addendum is shown.

(B) Only Commissioner's Interpretation or Correction Binding: Only the written interpretation or correction so given by the Commissioner shall be binding, and prospective bidders are warned that no other officer, agent or employee of the City is authorized to give information concerning, or to explain or interpret, the Contract.

(C) Documents given to a subcontractor for the purpose of soliciting the subcontractor's bid shall include either a copy of the bid cover sheet or a separate information sheet setting forth the project name, the Contract number (if available), the contracting agency and the Project's location.

10. Form of Bid

Each bid must be submitted upon the prescribed form and must contain: a) the name, residence and place of business of the person or persons making the same; b) the names of all persons interested therein, and if no other person is so interested, such fact must be distinctly stated; c) a statement to the effect that it is made without any connection with any other person making a bid for the same purpose and that it is in all respects fair and without collusion or fraud; d) a statement that no Council member or other officer or employee or person whose salary is payable in whole or part from the City Treasury is directly or indirectly interested therein or in the supplies, materials or equipment and work or labor to which it relates, or in any portion of the profits thereof; e) a statement that the bidder is not in arrears to the City or to any agency upon a debt or contract or taxes, and is not a defaulter as surety or otherwise upon any obligation to the City to any agency thereof, except as set forth in the bid.

THE BID SHALL BE TYPEWRITTEN OR WRITTEN LEGIBLY IN INK. THE BID SHALL BE SIGNED IN INK. ERASURES OR ALTERATIONS SHALL BE INITIALED BY THE SIGNER IN INK. FAILURE TO CONFORM TO THE REQUIREMENTS OF THIS SECTION 10 SHALL RESULT IN THE REJECTION OF THE BID.

11. Irrevocability of Bid

The prices set forth in the bid cannot be revoked and shall be effective until the award of the Contract, unless the bid is withdrawn as provided for in Sections 15 and 18 below.

12. Acknowledgment of Amendments

The receipt of any amendment to the Contract Documents shall be acknowledged by the bidder in its bid submission.

13. Bid Samples and Descriptive Literature

Bid samples and descriptive literature shall not be submitted by the bidder, unless expressly requested elsewhere in the Contract or Contract Documents. Any unsolicited bid samples or descriptive literature which are submitted shall not be examined or tested and shall not be deemed to vary any of the provisions of this Contract.

14. Proprietary Information/Trade Secrets

(A) The bidder shall identify those portions of the bid which it deems to be confidential, proprietary information or trade secrets, and provide justification why such materials shall not be disclosed by the City. All such materials shall be clearly indicated by stamping the pages on which such information appears, at the top and bottom thereof with the word "Confidential". Such materials stamped "Confidential" must be easily separable from the non-confidential sections of the bid.

(B) All such materials so indicated shall be reviewed by the Agency and any decision not to honor a request for confidentiality shall be communicated in writing to the bidder. For those bids which are unsuccessful, all such confidential materials shall be returned to the bidder. Prices, makes and model or catalog numbers of the items offered, deliveries, and terms of payment shall be publicly available after bid opening, regardless of any designation of confidentiality made by the bidder.

15. Pre-Opening Modification or Withdrawal of Bids

Bids may be modified or withdrawn by written notice received in the office designated in Attachment 1, before the time and date set for the bid opening. If a bid is withdrawn in accordance with this Section, the bid security, if any, shall be returned to the bidder.

16. Bid Evaluation and Award

In accordance with the New York City Charter, the Procurement Policy Board Rules and the terms and conditions of this Invitation For Bids, this Contract shall be awarded, if at all, to the responsible bidder whose bid meets the requirements and evaluation criteria set forth in the Invitation For Bids, and whose bid price is either the most favorable bid price or, if the Invitation For Bids so states, the most favorable evaluated bid price. A bid may not be evaluated for any requirement or criterion that is not disclosed in the Invitation For Bids.

Restriction: No negotiations with any bidder shall be allowed to take place except under the circumstances and in the manner set forth in Section 21. Nothing in this Section shall be deemed to permit a contract award to a bidder submitting a higher quality item than that designated in the Invitation For Bids, if that bid is not also the most favorable bid.

17. Late Bids, Late Withdrawals and Late Modifications

Any bid received at the place designated in the solicitation after the time and date set for receipt of bids is late and shall not be considered. Any request for withdrawal or modification received at the place designated in the solicitation after the time and date set for receipt of bids is late and shall not be considered. The exception to this provision is that a late modification of a successful bid that makes the bid terms more favorable to the City shall be considered at any time it is received.

18. Withdrawal of Bids.

Except as provided for in Section 15, above, a bidder may not withdraw its bid before the expiration of forty-five (45) days after the date of the opening of bids; thereafter, a bidder may withdraw its bid only in writing and in advance of an actual award. If within sixty (60) days after the execution of the Contract, the Commissioner fails to fix the date for commencement of work by written notice to the bidder, the bidder, at his option, may ask to be relieved of his obligation to perform the work called for by written notice to the Commissioner. If such notice is given to the Commissioner, and the request to withdraw is granted, the bidder waives all claims in connection with this Contract.

19. Mistake in Bids

(A) Mistake Discovered Before Bid Opening: A bidder may correct mistakes discovered before the time and date set for bid opening by withdrawing or correcting the bid as provided in Section 15 above.

(B) Mistakes Discovered Before Award

(1) In accordance with General Municipal Law (Section 103, subdivision 11), where a unilateral error or mistake is discovered in a bid, such bid may be withdrawn upon written approval of the Agency Chief Contracting Officer if the following conditions are met:

(a) The mistake is known or made known to the agency prior to the awarding of the Contract or within 3 days after the opening of the bid, whichever period is shorter; and
(b) The price bid was based upon an error of such magnitude that enforcement would be unconscionable; and
(c) The bid was submitted in good faith and the bidder submits credible evidence that the mistake was a clerical error as opposed to a judgment error; and
(d) The error in the bid is actually due to an unintentional and substantial arithmetic error or an unintentional omission of a substantial quantity of work, labor, material or services made directly in the compilation of the bid, which unintentional arithmetic error or unintentional omission can be clearly shown by objective evidence drawn from inspection of the original work paper, documents, or materials used in the preparation of the bid sought to be withdrawn; and
(e) It is possible to place the agency in the same position as existed prior to the bid.

(2) Unless otherwise required by law, the sole remedy for a bid mistake in accordance with this Article shall be withdrawal of the bid, and the return of the bid bond, or other security, if any, to the bidder. Thereafter, the agency may, in its discretion, award the Contract to the next lowest bidder or rebid the Contract. Any amendment to or reformation of a bid or a Contract to rectify such an error or mistake

therein is strictly prohibited.

(3) If the mistake and the intended correct bid are clearly evident on the face of the bid document, the bid shall be corrected to the intended correct bid and may not be withdrawn. Examples of mistakes that may be corrected are typographical errors, errors in extending unit prices, transposition errors and arithmetical errors.

20. Low Tie Bids

(A) When two or more low responsive bids from responsible bidders are identical in price, meeting all the requirements and criteria set forth in the Invitation For Bids, the Agency Chief Contracting Officer will break the tie in the following manner and order of priority:

(1) Award to a certified New York City small, minority or woman-owned business entity bidder;
(2) Award to a New York City bidder;
(3) Award to a certified New York State small, minority or woman-owned business bidder;
(4) Award to a New York State bidder.

(B) If two or more bidders still remain equally eligible after application of paragraph (A) above, award shall be made by a drawing by lot limited to those bidders. The bidders involved shall be invited to attend the drawing. A witness shall be present to verify the drawing and shall certify the results on the bid tabulation sheet.

21. Rejection of Bids

(A) Rejection of Individual Bids: The Agency may reject a bid if:

(1) The bidder fails to furnish any of the information required pursuant to Section 24 or 28 hereof; or if
(2) The bidder is determined to be not responsible pursuant to the Procurement Policy Board Rules; or if
(3) The bid is determined to be non-responsive pursuant to the Procurement Policy Board Rules; or if
(4) The bid, in the opinion of the Agency Chief Contracting Officer, contains unbalanced bid prices and is thus non-responsive, unless the bidder can show that the prices are not unbalanced for the probable required quantity of items, or if the imbalance is corrected pursuant to Section 15.

(B) Rejection of All Bids: The Agency, upon written approval by the Agency Chief Contracting Officer, may reject all bids and may elect to resolicit bids if in its sole opinion it shall deem it in the best interest of the City so to do.

(C) Rejection of All Bids and Negotiation With All Responsible Bidders: The Agency Head may determine that it is appropriate to cancel the Invitation For Bids after bid opening and before award and to complete the acquisition by negotiation. This determination shall be based on one of the following reasons:

(1) All otherwise acceptable bids received are at unreasonable prices, or only one bid is received and the Agency Chief Contracting Officer cannot determine the reasonableness of the bid price, or no responsive bid has been received from a responsible bidder; or

(2) In the judgment of the Agency Chief Contracting Officer, the bids were not independently arrived at in open competition, were collusive, or were submitted in bad faith.

(D) When the Agency has determined that the Invitation for Bids is to be canceled and that use of negotiation is appropriate to complete the acquisition, the contracting officer may negotiate and award the Contract without issuing a new solicitation, subject to the following conditions:

(1) prior notice of the intention to negotiate and a reasonable opportunity to negotiate have been given by the contracting officer to each responsible bidder that submitted a bid in response to the Invitation for Bids;

(2) the negotiated price is the lowest negotiated price offered by a responsible bidder; and

(3) the negotiated price is lower than the lowest rejected bid price of a responsible bidder that submitted a bid in response to the Invitation for Bids.

22. Right to Appeal Determinations of Non-Responsiveness or Non-Responsibility and Right to Protest Solicitations and Award

The bidder has the right to appeal a determination of non-responsiveness or non-responsibility and has the right to protest a solicitation and award. For further information concerning these rights, the bidder is directed to the Procurement Policy Board Rules.

23. Affirmative Action and Equal Employment Opportunity

This Invitation For Bids is subject to applicable provisions of Federal, State and Local Laws and executive orders requiring affirmative action and equal employment opportunity.

24. VENDEX Questionnaires

(A) Requirement: Pursuant to Administrative Code Section 6-116.2 and the PPB Rules, bidders may be obligated to complete and submit VENDEX Questionnaires. Generally, if this bid is $100,000 or more, or if this bid when added to the sum total of all contracts, concessions and franchises the bidder has received from the City and any subcontracts received from City contractors over the past twelve months, equals or exceeds $100,000, Vendex Questionnaires must be completed. If required, Vendex Questionnaires must be completed and submitted before any award of contract may be made or before approval is given for a proposed subcontractor. Non-compliance with these submission requirements may result in the disqualification of the bid, disapproval of a subcontractor, subsequent withdrawal of approval for the use of an approved subcontractor, or the cancellation of the contract after its award.

(B) Submission: Vendex Questionnaires must be submitted directly to the Mayor's Office of Contract Services, ATTN: Vendex, 253 Broadway, 9th Floor, New York, New York 10007. In addition, the bidder must submit a Confirmation of Vendex Compliance to the agency. A form for this confirmation is set forth in the Bid Booklet.

(C) Obtaining Forms: Vendex Questionnaires, as well as detailed instructions, may be obtained at www.nyc.gov/vendex. The bidder may also obtain Vendex forms and instructions by contacting the

Agency Chief Contracting Office or the contract person for this contract.

25. Complaints About the Bid Process

The New York City Comptroller is charged with the audit of contracts in New York City. Any vendor who believes that there has been unfairness, favoritism or impropriety in the bid process should inform the Comptroller, Office of Contract Administration, One Centre Street, Room 835, New York, New York; telephone number (212)669-2797.

26. Bid, Performance and Payment Security

(A) Bid Security: Each bid must be accompanied by bid security in an amount and type specified in Attachment 1 (page A-1 of the Bid Booklet). The bid security shall assure the City of New York of the adherence of the bidder to its proposal, the execution of the Contract, and the furnishing of Performance and Payment Bonds by the bidder, if required in Attachment 1. Bid security shall be returned to the bidder as follows:

(1) Within ten (10) days after the bid opening, the Comptroller will be notified to return the deposits of all but the three (3) lowest bidders. Within five (5) days after the award, the Comptroller will be notified to return the deposits of the remaining two unsuccessful bidders.
(2) Within five (5) days after the execution of the Contract and acceptance of the Contractor's bonds, the Comptroller will be notified to return the bid security of the successful bidder or, if performance and payment bonds are not required, only after the sum retained under Article 21 of the Contract equals the amount of the bid security.
(3) Where all bids are rejected, the Comptroller will be notified to return the deposit of the three (3) lowest bidders at the time of rejection.

(B) Performance and Payment Security: Performance and Payment Security must be provided in an amount and type specified in Attachment 1 (page A-1 of the Bid Booklet). The performance and payment security shall be delivered by the contractor prior to or at the time of execution of the Contract. If a contractor fails to deliver the required performance and payment security, its bid security shall be enforced, and an award of Contract may be made to the next lowest responsible and responsive bidder, or the contract may be rebid.

(C) Acceptable Types of Security: Acceptable types of security for bids, performance, and payment shall be limited to the following:

(1) a one-time bond in a form satisfactory to the City;
(2) a bank certified check or money order;
(3) obligations of the City of New York; or
(4) other financial instruments as determined by the Office of Construction in consultation with the Comptroller.

Whenever the successful bidder deposits obligations of the City of New York as performance and payment security, the Comptroller may sell and use the proceeds thereof for any purpose for which the principal or surety on such bond would be liable under the terms of the Contract. If the money is deposited with the Comptroller, the successful bidder shall not be entitled to receive interest on such money from the City.

(D) Form of Bonds: Security provided in the form of bonds must be prepared on the form of bonds authorized by the City of New York. Forms for bid, performance, and payment bonds are included in the Invitation for Bids Documents. Such bonds must have as surety thereunder such surety company or companies as are: (I) approved by the City of New York; (2) authorized to do business in the State of New York, and (3) approved by the Department of the Treasury of the United States. Premiums for any required bonds must be included in the base bid.

The bidder is advised that submission of a bid bond where the surety on such bond fails to meet the criteria set forth herein, shall result in the rejection of the bid as non-responsive.

The Department of the Treasury of the United States advises that information concerning approved surety companies may be obtained as follows: (1) from the Government Printing Office at 202-512-1800; (2) through the Internet at http://www.fms.treas.gov/c570/index.html, and (3) through a computerized public bulletin board, which can be accessed by using your computer modem and dialing 202-874-6887.

(E) Power of Attorney: Attorneys in fact who sign bid, performance, or payment bonds must file with each bond a certified copy of their power of attorney to sign said bonds.

27. Failure to Execute Contract

In the event of failure of the successful bidder to execute the Contract and furnish the required security within ten (10) days after notice of the award of the Contract, the deposit of the successful bidder or so much thereof as shall be applicable to the amount of the award made shall be retained by the City, and the successful bidder shall be liable for and hereby agrees to pay on demand the difference between the price bid and the price for which such Contract shall be subsequently awarded, including the cost of any required reletting and less the amount of such deposit. No plea of mistake in such accepted bid shall be available to the bidder for the recovery of the deposit or as a defense to any action based upon such accepted bid. Further, should the bidder's failure to comply with this Section cause any funding agency, body or group (Federal, State, City, Public, Private, etc.) to terminate, cancel or reduce the funding on this project, the bidder in such event shall be liable also to the City for the amount of actual funding withdrawn by such agency on this project, less the amount of the forfeited deposit.

28. Bidder Responsibilities and Qualifications

(A) Bidders must include with their bids all information necessary for a determination of bidder responsibility, as set forth in the Specifications.

(B) The Agency may require any bidder or prospective bidder to furnish all books of account, records, vouchers, statements or other information concerning the bidder's financial status for examination as may be required by the Agency to ascertain the bidder's responsibility and capability to perform the Contract. If required, a bidder must also submit a sworn statement setting forth such information as the Agency may require concerning present and proposed plant and equipment, the personnel and qualifications of his working organizations, prior experience and performance record.

(C) Oral Examination on Qualifications: In addition thereto, and when directed by the Agency, the bidder, or a responsible officer, agent or employee of the bidder, must submit to an oral examination to be conducted by the Agency in relation to his proposed tentative plan and schedule of

operations, and such other matters as the Agency may deem necessary in order to determine the bidder's ability and responsibility to perform the work in accordance with the Contract. Each person so examined must sign and verify a stenographic transcript of such examination noting thereon such corrections as such person may desire to make.

(D) If the bidder fails or refuses to supply any of the documents or information set forth in paragraph (B) hereof or fails to comply with any of the requirements thereof, the Agency may reject the bid.

29. Employment Report

In accordance with Executive Order No. 50 (1980) as modified by Executive Order 108 (1986), the filing of a completed Employment Report (ER) is a requirement of doing business with the City of New York for construction contractors with contracts of $1,000,000 or more and subcontractors with construction subcontracts of $750,000 or more. The required forms and information are included in the Bid Booklet.

30. Labor Law Requirements

(A) General: The successful bidder will be required to comply strictly with all Federal, State and local labor laws and regulations.

(B) New York State Labor Law: This Contract is subject to New York State Labor Law Section 220, which requires that construction workers on the site be paid prevailing wages and supplements. The Contractor is reminded that all wage provisions of this Contract will be enforced strictly and failure to comply will be considered when evaluating performance. Noncompliance may result in the contractor being debarred by the City from future contracts. Complaints filed with the Comptroller may result in decisions which may debar a contractor from bidding contracts with any state governmental entity and other political subdivisions.

(C) Records: The Contractor is expected to submit accurate payroll reports and other required documents and verify attendance and job classifications being utilized in compliance with the law, Contract provisions and agency procedures.

31. Insurance

(A) Bidders are advised that the insurance requirements contained herein are regarded as material terms of the Contract. As required by Article 22 of the Contract, the contractor must effect and maintain with companies licensed and authorized to do business in the State of New York, the types of insurance set forth therein, when required by and in the amounts set forth in Schedule A of the General Conditions. Such required insurance must be provided from the date the contractor is ordered to commence work and up to the date of final acceptance of all required work.

(B) The contractor must, within ten days of receipt of the notice of award, submit the following insurance documentation: (a) original certificate of insurance for general liability in the amount required by Schedule A of the General Conditions, and (b) original certificates of insurance or other proof of coverage for workers' compensation and disability benefits, as required by Section 57 of the New York State Workers' Compensation Law and Section 220 of the Disability Benefits Law.

32. Lump Sum Contracts

(A) Comparison of Bids: Bids on Lump Sum Contracts will be compared on the basis of the lump sum price bid, adjusted for alternate prices bid, if any.

(B) Lump Sum Bids for "General Construction Work" which include excavation shall include all necessary excavation work defined in the Specifications as being included in the lump sum bid. The bidder shall also bid a unit price for the additional cost of excavating material which is defined in the Specifications as excavation for which additional payment will be made. The total estimated additional cost of removing such material will be taken as the quantity set forth in the Engineer's Estimate multiplied by the unit price bid. This total estimated cost of additional excavation shall be added to the lump sum bid for the General Construction Work for the purpose of comparing bids to determine the low bidder.

(C) Variations from Engineer's Estimate: The Engineer's Estimate of the quantity of excavation for which additional payment will be made is approximate only and is given solely to be used as a uniform basis for the comparison of bids and such estimate is not to be considered as part of this contract. The quantities actually required to complete the contract work may be more or less than the quantities in the Engineer's Estimate and, if so, no action for damages or for loss of profits shall accrue to the contractor by reason thereof.

33. Unit Price Contracts

(A) Comparison of Bids: Bids on Unit Price Contracts will be compared on the basis of a total estimated price, arrived at by taking the sum of the estimated quantities of such items, in accordance with the Engineer's Estimate of Quantities set forth in the Bid Schedule, multiplied by the corresponding unit prices, and including any lump sum bids on individual items.

(B) Variations from Engineer's Estimate: Bidders are warned that the Engineer's Estimate of Quantities on the various items of work and materials is approximate only, given solely to be used as a uniform basis for the comparison of bids, and is not be considered part of this contract. The quantities actually required to complete the contract work may be less or more than so estimated, and if so, no action for damages or for loss of profits shall accrue to the contractor by reason thereof.

(C) Overruns: The terms and conditions applicable to overruns of unit price items are set forth in Article 26 of the Contract.

34. Excise Tax

Bidders are referred to the Specifications for information on Federal Excise Tax exemptions.

35. Licenses and Permits

The successful bidder will be required to obtain all necessary licenses and permits necessary to perform the work.

36. Multiple Prime Contractors

If more than one prime contractor will be involved on this project, all contractors are required to examine the Invitation for Bid packages for all other parts of the project.

37. Locally Based Enterprise Requirements (LBE)

This Contract is subject to the requirements of Administrative Code, Section 6-108.1, and the regulations promulgated thereunder. No construction contract will be awarded unless and until these requirements have been complied with in their entirety. The bidder is advised of the provisions set forth below, as well as the provisions with respect to the Locally Based Enterprise Program contained in Article 67 of the Contract. The contractor is advised that:

(A) If any portion of the Contract is subcontracted, not less than ten percent of the total dollar amount of the contract shall be awarded to locally based enterprises ("LBEs"); except, where less than ten percent of the total dollar amount of the Contract is subcontracted, such lesser percentage shall be so awarded.

(B) No contractor shall require performance and payment bonds from LBE subcontractors.

(C) No Contract shall be awarded unless the contractor first identifies in its bid:

(1) the percentage, dollar amount and type of work to be subcontracted; and
(2) the percentage, dollar amount and type of work to be subcontracted to LBEs.

(D) Within ten calendar days after notification of low bid, the apparent low bidder shall submit an "LBE Participation Schedule" to the contracting agency. If such schedule does not identify sufficient LBE subcontractors to meet the requirements of Administrative Code Section 6-108.1, the apparent low bidder shall submit documentation of its good faith efforts to meet such requirements.

(1) The "LBE Participation Schedule" shall include:

(a) the name and address of each LBE that will be given a subcontract,
(b) the percentage, dollar amount and type of work to be subcontracted to the LBE, and
(c) the dates when the LBE subcontract work will commence and end.

(2) The following documents shall be attached to the "LBE Participation Schedule":

(a) verification letters from each subcontractor listed in the "LBE Participation Schedule" stating that the LBE will enter into a formal agreement for work,
(b) certification documents of any proposed LBE subcontractor which is not on the LBE certified list, and
(c) copies of the certification letter of any proposed subcontractor which is an LBE.

(3) Documentation of good faith efforts to achieve the required LBE percentage shall include as appropriate but not limited to the following:

(a) attendance at prebid meetings, when scheduled by the agency, to advise bidders of contract requirements;

(b) advertisement where appropriate in general circulation media, trade association publications and small business media of the specific subcontracts that would be at least equal to the percentage goal for LBE utilization specified by the contractor;

(c) written notification to association of small, minority and women contractors soliciting specific subcontractors;

(d) written notification by certified mail to LBE firms that their interest in the contract is solicited for specific work items and their estimated values;

(e) demonstration of efforts made to select portions of the work for performance by LBE firms in order to increase the likelihood of achieving the stated goal;

(f) documented efforts to negotiate with LBE firms for specific subcontracts, including at a minimum:
(i) The names, address and telephone numbers of LBE firms that are contacted;
(ii) A description of the information provided to LBE firms regarding the plans and specifications for portions of the work to be performed;
(iii) Documentation showing that no reasonable price can be obtained from LBE firms;
(iv) A statement of why agreements with LBE firms were not reached;

(g) a statement of the reason for rejecting any LBE firm which the contractor deemed to be unqualified; and

(h) documentation of efforts made to assist the LBE firms contacted that needed assistance in obtaining required insurance.

(E) Unless otherwise waived by the Commissioner with the approval of the Office of Economic and Financial Opportunity, failure of a proposed contractor to provide the information required by paragraphs (C) and (D) above may render the bid non-responsive and the Contract may not be awarded to the bidder. If the contractor states that it will subcontract a specific portion of the work, but can demonstrate despite good faith efforts it cannot achieve its required LBE percentage for subcontracted work until after award of Contract, the Contract may be awarded, subject to a letter of compliance from the contractor stating that it will comply with Administrative Code Section 6-108.1 and subject to approval by the Commissioner. If the contractor has not met its required LBE percentage prior to award, the contractor shall demonstrate that a good faith effort has been made subsequent to award to obtain LBEs on each subcontract until its meets the required percentage.

(F) When a bidder indicates prior to award that no work will be subcontracted, no work may be subcontracted without the prior written approval of the Commissioner, which shall be granted only if the contractor in good faith seeks LBE subcontractors at least six weeks prior to the start of work.

(G) The contractor may not substitute or change any LBE which was identified prior to award of the contract without the written permission of the Commissioner. The contractor shall make a written application to the Commissioner for permission to make such substitution or change, explaining why the contractor needs to change its LBE subcontractor and how the contractor will meet its LBE subcontracting requirement. Copies of such application must be served on the originally identified LBE by certified mail return receipt requested, as well as the proposed substitute LBE. The Commissioner shall determine whether or not to grant the contractor's request for substitution.

38. Bid Submission Requirements

The following forms, all of which are contained in the Bid Booklet, are to be completed and submitted with the bid:

(1) Bid Schedule and Bid Form, including Affirmation
(2) Bid Security (if required, see Attachment 1 on Page A-1)
(3) M/WBE Subcontactor Utilization Plan (if participation goals have been established)

FAILURE TO SUBMIT ITEMS (1), (2) AND (3)
WILL RESULT IN THE DISQUALIFICATION OF THE BID.

(4) Safety Questionnaire
(5) Construction Employment Report (if bid is $1,000,000 or more)
(6) Contract Certificate (if bid is less than $1,000,000)
(7) Confirmation of Vendex Compliance
(8) Special Experience Requirements (if applicable to this contract)
(9) Apprenticeship Program Questionnaire (if applicable)

FAILURE TO SUBMIT ITEMS (4) THROUGH (9)
MAY RESULT IN THE DISQUALIFICATION OF THE BID.

39. Comptroller's Certificate

This Contract shall not be binding or of any force unless it is registered by the Comptroller in accordance with Section 328 of the City Charter and the Procurement Policy Board Rules. This Contract shall continue in force only after annual appropriation of funds by the City of New York and certification as hereinabove set forth.

40. Procurement Policy Board Rules

This Invitation For Bids is subject to the Rules of the Procurement Policy Board of the City of New York. In the event of a conflict between said Rules and a provision of this Invitation For Bids, the Rules shall take precedence.

41. DDC Safety Requirements

The DDC Safety Requirements apply to the work to be performed pursuant to the Contract. The DDC Safety Requirements are set forth on the following pages.

CITY OF NEW YORK

DEPARTMENT OF DESIGN AND CONSTRUCTION

SAFETY REQUIREMENTS

June 2015

THE DDC SAFETY REQUIREMENTS INCLUDE THE FOLLOWING SECTIONS:

I. **POLICY ON SITE SAFETY**

II. **PURPOSE**

III. **DEFINITIONS**

IV. **RESPONSIBILITIES**

V. **SAFETY QUESTIONNAIRE**

VI. **SAFETY PROGRAM AND SITE SAFETY PLAN**

VII. **KICK-OFF/PRE-CONSTRUCTION MEETINGS AND SAFETY REVIEW**

VIII. **EVALUATION DURING WORK IN PROGRESS**

IX. **SAFETY PERFORMANCE EVALUATION**

I. POLICY ON SITE SAFETY

The City of New York Department of Design and Construction (DDC) is committed to a policy of injury and illness prevention and risk management for construction work that will ensure the safety and health of the workers engaged in the projects and the protection of the general public. Therefore, it is DDC's policy that work carried out by Contractors on DDC jobsites must, at a minimum, comply with applicable federal, state and city laws, rules and regulations, including without limitation:

- U. S. Department of Labor 29 Code of Federal Regulations (CFR) Part 1926 and applicable Sub-parts of Part 1910 – U.S. Occupational Safety and Health Administration (OSHA); New York State Department of Labor Industrial Code Rule 23 – Protection in Construction, Demolition and Excavation;
- New York City Construction Codes, Title 28
- NYC Department of Transportation Title 34 Chapter 2 – Highway Rules
- New York State Department of Labor Industrial Code Rule 16 NYCRR Part 753
- Title 15 of the Rules of the City of New York, Chapter 13 Citywide Construction Dust Mitigation
- Manual on Uniform Traffic Control Devices (MUTCD)
- Title 15 of the Rules of the City of New York, Chapter 28 Citywide Construction Noise Mitigation

II. PURPOSE

The purpose of this policy is to ensure that Contractors perform their work and supervise their employees in accordance with all applicable federal, state and city rules and regulations. Further, Contractors will be expected to minimize or eliminate jobsite and public hazards, through a planning, inspection, auditing and corrective action process. The goal is to control risks so that injuries, illnesses and accidents to contractors' employees, DDC employees and the general public, as well as damage to city-owned and private property, are reduced to the lowest level feasible.

III. DEFINITIONS

Agency Chief Contracting Officer (ACCO): The ACCO shall mean the person delegated authority by the Commissioner to organize and supervise the procurement activity of subordinate Agency staff in conjunction with the CCPO.

Competent Person: As defined by OSHA, an individual who is capable of identifying existing and predictable hazards in the surroundings or working conditions that are unsanitary, hazardous, or dangerous to employees or the general public, and who has authorization to take prompt corrective measures to eliminate them.

Construction Safety Auditor: A representative of the QA&CS Construction Safety Unit who provides inspection and assessment services to enhance health and safety on all DDC construction projects. The activities of the Construction Safety Auditor include performing site surveys, reviewing health and safety plans, reviewing construction permits, and rendering technical advice and assistance to DDC Resident Engineers and Project Managers.

Construction Safety Unit: A part of QA&CS within the Division of Program Management/ Safety & Site Support that assesses contractor safety on DDC jobsites and advises responsible parties of needed corrective actions.

Construction Superintendent: A representative of the contractor responsible for overseeing performance of the required construction work. This individual must engage in sound construction practices, and is responsible to maintain a safe work site. In the case of a project involving the demolition, alteration or new construction of buildings, the Construction Superintendent must be licensed by the NYC Department of Buildings.

Contractor: For purposes of these Safety Requirements, the term "Contractor" shall mean any person or entity that enters into a contract for the performance of construction work on a DDC project. The term "Contractor" shall include any person or entity which enters into any of the following types of contracts: (1) a prime construction contract for a specific project, (2) a prime construction contract using the Job Order Contracting System ("JOCS Contract"), and (3) a subcontract with a CM/Builder ("First Tier Subcontract").

Daily Safety Job Briefing: Daily jobsite safety meetings, giving to all jobsite personnel by contractor, with the purpose of discussing project specific safety procedures for the scheduled construction work.

Director - Quality Assurance and Construction Safety (QA&CS): Responsible for the operations of the QACS Construction Safety Unit and the DDC Site Safety management programs.

Job Hazard Analysis (JHA): A process of identifying the major job steps and any potential site-specific hazards that may be present during construction and establishing the means and methods to eliminate or control those hazards.

Qualified Person: As defined by OSHA, an individual who, by possession of a recognized degree, certificate, license or professional standing, or who by extensive knowledge, training, and experience, has successfully demonstrated his or her ability to solve problems relating to the subject matter, the work, or the project. Qualified Persons are required under regulation to address issues pertaining, but without limit, to fall protection, scaffold design and trenching and shoring, among others.

Project Site: Those areas indicated in the Contract Documents where the Work is to be performed.

Project Safety Representative: The designated project safety representative shall have completed an authorized 30 hour OSHA Construction Safety Course and other safety training applicable to Contractor's/subcontractor's project work. Except in instances where a dedicated Project Safety Manager is required, a Project Safety Representative may also function as a superintendent, foreman or crew leader on the Project, but must have sufficient experience and authority to undertake corrective actions and must qualify to be a competent person. No work is to be performed on site when a Project Safety Representative is not present.

Project Safety Manager: A dedicated, full-time project safety manager may be a contractual requirement on large projects or projects deemed by DDC to be particularly high risk. This would be in addition or in lieu of a Contractor's Project Safety Representative. This individual shall not have any other assigned duties. This individual shall have received, at a minimum an authorized 30 hour OSHA Construction Safety Course. Other examples of acceptable training are OSHA Safety and Health Standards for the Construction Industry training program (OSHA 510), Certified Safety Professional (CSP), Certified Industrial Hygienist (CIH) or a degree/certificate in a safety and health from a college-level curriculum.
A Project Safety Manager shall possess the additional training, years of experience, and skills necessary to thoroughly understand the health and safety hazards and controls for large construction projects, including the full scope of the specific Work.

QA&CS – Quality Assurance and Construction Safety of the New York City Department of Design and Construction.

Resident Engineer (RE) / Construction Project Manager (CPM): Representative of the Commissioner duly designated by the Commissioner to be his/her representative at the site of the work. (The RE/CPM may be a third-party consultant, including a Construction Management firm, retained by DDC)

Safety Program: Established by the Contractor that covers all operations of that Contractor and establishes the Contractor's overall safety policy, regulatory compliance plan and minimum safety standards. The Safety Program must be submitted prior to the commencement of work at the site and is subject to review and acceptance by the Construction Safety Unit.

Safety Questionnaire: Used by DDC to evaluate Contractor's current and past safety performance. It is required to be completed by all Contractors initially when submitting bids for Construction work, or when being pre-qualified and updated annually or as requested by the DDC.

Site Safety Manager: For certain projects, as defined in NYC Construction Codes – Title 28, the Contractor shall provide a Site Safety Manager with a Site Safety Manager License issued by the NYC Department of Building.

Site Safety Plan: A site-specific safety plan developed by the Contractor for a specific project. The Site Safety Plan must identify hazards associated with the project, and include specific safety procedures and training appropriate and necessary to complete the work. The Site Safety Plan must be submitted prior to the commencement of work at the site and is subject to review and acceptance by the Construction Safety Unit.

Unsafe or Unhealthy Condition: A condition that could be potentially hazardous to the health and safety of personnel or the public, and/or damaging to equipment, machinery, property or the environment.

Weekly Safety Meetings: Weekly documented jobsite safety meetings, given to all jobsite personnel by contractor, with the purpose of discussing general safety topics and job specific requirements encountered at the DDC work site.

Work: The construction required by the Contract Documents whether completed or partially completed, performed by the Contractor/ subcontractors. Work refers to the furnishing of labor, furnishing and incorporating materials and equipment into the construction and providing any service required by the Contract Documents to fulfill the Contractor's obligation to complete the Project.

IV. RESPONSIBILITIES

All persons who manage, perform, and provide support for construction projects shall conduct operations in compliance with the requirements identified in this Policy and all applicable governing regulatory agency requirements and guidelines pertaining to safety in construction.

A. DDC or CM Resident Engineer / Construction Project Manager

- Monitors the issuance of safety- related permits, approvals and drawings and maintains copies on site.
- Monitors construction-related work activities to confirm that they are conducted in accordance with DDC policies and all applicable regulations that pertain to construction safety.
- Maintains documentation and periodically attends weekly safety meetings and daily safety job briefings.
- Notifies the Construction Safety Unit and the ACCO's Insurance and Risk Management Unit of project- related accidents and emergencies, as per DDC's Construction Safety Emergency and Accident Notification and Response Protocol.
- Gathers facts related to all accidents and prepares DDC Construction Accident Report.

- Notifies the Construction Safety Unit within two (2) hours of the start of an inspection by any outside regulatory agency personnel, including OSHA, NYC DOB or others and forwards a copy of the inspection report within three days of its receipt.
- Monitors the conditions at the site for conformance with the contractor's Site Safety Plan and DDC construction documents.
- Notifies the contractor and DDC in the event that any condition or activity exists that is not in compliance with the contractor's Site Safety Plan, applicable federal, state or local codes or any condition that presents a potential risk of injury to the public or workers or possible damage to property.
- Notifies DDC of any unsafe or unhealthy condition and directs the contractor to provide such labor, materials, equipment and supervision to abate such conditions.
- Escort and assist QA&CS Construction Safety Auditors during the field and record inspections.
- Reports emergency conditions to the Construction Safety Unit immediately.

B. Contractors

- Submit a completed Safety Questionnaire and other safety performance related documentation with its bid or as part of a pre-qualification package.
- Complete a written Job Hazard Analysis (JHA) that identifies safety hazards for project specific work tasks and hazard control methods. A written JHA shall be available at the site for reference and included in the Site Safety Plan submitted by the contractor.
- Submit a Site Safety Plan and Safety Program within 30 days from the Award Date or as otherwise directed. The Site Safety Plan and Safety Program are subject to review and acceptance by the Construction Safety Unit prior to the commencement of work at the site. The Site Safety Plan shall be revised and updated as necessary.
- Develop project specific safety procedures to protect general public during all construction activities for the duration of the project.
- Ensure that all employees are aware of the hazards associated with the project through documented formal and informal training and/or other communications. Conduct and document weekly safety meetings and daily job briefing sessions for the duration of the project. Documentation to be provided to the RE/CPM on a monthly basis.
- Name the Project Safety Representative and Project Safety Manager, if required. The Contractor will be required to identify the Project Safety Representative and Project Safety Manager in the Site Safety Plan. Resumes, outlining the qualification and experience for the Project Safety Representative and Project Safety Manager, shall be available upon request. DDC reserves the right to request that the Contractor replace any Project Safety Representative or Project Safety Manager for any reason at any time during the project.
- Name a Competent Person(s), The Contractor will be required to identify a Competent Person(s) in the Site Safety Plan.
- Comply with all mandated federal, state and local safety and health rules and regulations.
- Comply with all provisions of the Site Safety Plan.
- Conduct applicable safety training prior to the commencement of work at the site. All training records (OSHA 10-hour, flagger, scaffold, fall protection, confined space entry, etc.) shall be provided to the RE/CPM prior to mobilization, included in the Site Safety Plan, kept current during the course of the project, and available for review. Prior to performing any work on DDC project all employees shall have successfully completed, within the previous five calendar years, a 10 Hour OSHA construction safety course.
- As part of the Site Safety Plan, prepare a site specific programs and plans, such as MPT plan, steel erection plan, confined space program, fall protection plan, demolition plan, etc. (if not otherwise provided in the contract documents) and comply with all of its provisions.
- Conduct and document site-specific safety orientation for Contractor personnel to review the hazards associated with the project as identified in the Site Safety Plan and the specific safety procedures and

controls that will be used to protect workers, the general public and property. The Project Safety Representative and/or Project Safety Manager will conduct this training prior to mobilization and provide documentation to the RE/CPM.

- Provide, replace and adequately maintain at or around the project site, suitable and sufficient signage, lights, barricades and enclosures (fences, sidewalk sheds, netting, bracing, etc.).
- Report unsafe or unhealthy conditions to the RE/CPM as soon as practical, but no more than 24 hours after discovery, and take prompt actions to remove or abate such conditions.
- Report any accidents involving injuries to workers or the general public, as well as property damage, to the RE/CPM within one (1) hour.
- Following an accident, the Contractor shall not remove or alter any equipment, structure, material, or evidence related to the accident. Exception: Immediate emergency procedures taken to secure structures, temporary construction, operations, or equipment that pose a continued imminent danger or facilitate assistance for persons who are trapped or who have sustained bodily injury.
- Notify the RE/CPM within one (1) hour of the start of an inspection by any outside regulatory agency personnel, including OSHA, NYC DOB or others.
- Maintain all records pertaining to all required compliance documents and accident and injury reports.
- Address DDC recommendations on safety, which shall in no way relieve the Contractor of its responsibilities for safety on the project. The Contractor has sole responsibility for safety.

V. SAFETY QUESTIONNAIRE

DDC requires that all Contractors provide information regarding their current and past safety performance and programs. This will be accomplished by the use of the DDC Safety Questionnaire. As a part of the bid submittal package, the contractor must submit a completed DDC Safety Questionnaire listing company workers' compensation experience modification rating and OSHA Incident Rates for the three (3) years prior to the date of the bid opening. DDC may request a Contractor to update its Questionnaire at any time or to provide more detailed information. The Contractor must provide the requested information within 15 days.

The following criteria will be used by DDC in reviewing the Contractor's responsibility, which will be based on the information provided on the questionnaire:

Criteria 1: OSHA Injury and Illness Rates (I&IR) are no greater than the average for the industry (based on the most current Bureau of Labor Statistics data for the Contractors SIC code); and

Criteria 2: Insurance workers compensation Experience Modification Rate (EMR) equal to or less than 1.0; and

Criteria 3: Any willful violations issued by OSHA or NYC DOB within the last three (3) years; and

Criteria 4: A fatality (worker or member of public) and injuries, requiring OSHA notification, experienced on or near Contractor's worksite within the last three (3) years; and

Criteria 5: Past safety performance on DDC projects (accidents; status of safety program and site safety plan submittals; etc.)

Criteria 6: OSHA violation history for the last three (3) years;

Criteria 7: Contractor shall provide OSHA Injury and Illness Records (currently OSHA 300 and 300A Logs) for the last three (3) years.

If the Contractor fails to meet the basic criteria listed above, the Construction Safety Unit may request, through the ACCO, more details concerning the Contractor's safety experience. DDC may request the Contractor to provide copies of, among other things, accident investigation reports, OSHA records, OSHA and NYC DOB citations, EPA citations and written corrective action plan.

VI. SAFETY PROGRAM AND SITE SAFETY PLAN

Within thirty (30) days from the Award Date, or as otherwise directed, the Contractor shall submit the following: (1) Safety Program, and (2) Site Safety Plan. The Safety Program shall set forth the Contractor's overall safety policy, regulatory compliance plan and minimum safety standards. The Site Safety Plan shall identify project work scope, safety hazards associated with the project tasks, and include specific safety procedures and training appropriate and necessary to complete the work. The Safety Program and the Site Safety Plan are subject to review and acceptance by the Construction Safety Unit prior to the commencement of work at the site. Failure by the Contractor to submit an acceptable Site Safety Plan and Safety Program shall be grounds for default.

Safety Program: Corporate Safety Program established by the Contractor that includes the Contractor's overall safety policy, regulatory compliance plan and basic safety procedures covering all aspects of construction operations, performed by the Contractor. The Safety Program shall be a written document with a separate section describing each element of the Safety Program. The Safety Program shall have at minimum the following elements applicable to the Contractor's operations:

- Responsibility and Organization – Contractor's company organization chart, including titles, names, contact information, roles and responsibilities for key personnel, etc.
- Safety Training Program – Contractor's corporate training program.
- Hazard Corrective Actions – Criteria for safety inspections, identification of safety non-compliances, implementation and verification of corrective actions, forms to document safety inspections results, etc.
- Accident/Exposure Investigation
- Recordkeeping and Reporting Injuries – Responsible staff; reporting and recording criteria; OSHA 300 and 300A form completion, etc.
- Fire Protection and Prevention Program
- Housekeeping
- Illumination
- Sanitation
- Personal Protective Equipment (PPE) – Company policy for the use of head protection, foot protection, hearing protection, eye and face protection, protective clothing, and any additional protective equipment based on work tasks; PPE inspection and replacement policy.
- Hazard Communication Program
- Employee Emergency Action Plan
- Protection of Underground Facilities and Utilities
- Ionizing/Nonionizing Radiation
- Material Handling, Storage, Use and Disposal
- Tools – Hand and Power
- Signs, Signals, and Barricades
- Scaffold – Local Law 52 requirements, installation, use, inspection, dismantling, training and general safety requirements.
- Welding and Cutting
- Electrical Safety
- Fall Protection
- Cranes, Derrick, Hoists, Elevators, Conveyors
- Excavation Safety
- Concrete and Masonry Construction
- Maintenance and Protection of Traffic
- Steel Erection
- Demolition
- Blasting and the Use of Explosives
- Stairways and Ladders

- Toxic and Hazardous Substances
- Alcohol and Drug Abuse Policy
- Rodents and Vermin
- Occupational Noise Exposure
- Confined Space Program – General confined Space Program: training requirements, confined space hazard evaluation procedure, atmospheric testing procedure, confined space classification, permit-required procedure, communication procedure, rescue procedure, forms, etc.
- Construction Vehicles/Heavy Equipment
- Dust Control Procedures

Site Safety Plan: The Site Safety Plan shall be a written document and shall apply to all project specific Contractor and subcontractor operations, and shall have at a minimum, the following elements with each element described in a separate section (It may be necessary to modify the basic format for certain unique or high-risk projects, such as tunnels or high-rise construction):

- Project Work Scope – Detailed information regarding work tasks that will be performed by contractor and subcontractors under the project.
- Responsibility and Organization – Contractor's organization chart with responsible staff for the project, including titles, names, contact information, roles and responsibilities.
- Safety Training and Education – OSHA 10 Hours training, requirements for daily safety briefings and weekly safety meetings, any work task specific training, responsible staff for implementation of training program for the project.
- Job Hazard Analysis (JHA) – Project specific Job Hazard Analysis including work tasks, identified hazards, hazard control methods (administrative, engineering, PPE), contractor's name, project id, location, name and signature of a certifying person, hazard assessment date.
- Protection of Public
- Hazard Corrective Actions – Responsible staff, forms, frequency of safety inspections and implementation of corrective actions.
- Accident/Exposure Investigation – Accident/incident notification procedure of DDC project staff. Project specific procedures for accident investigation and implementation of corrective actions.
- First Aid and Medical Attention – Responsible staff, location and inspection of First Aid kit, directions to local hospitals; emergency telephone numbers.
- Project Specific Fire Protection and Prevention Program.
- Project Specific Illumination Procedure.
- Project Specific Sanitation Procedure.
- Personal Protective Equipment (PPE)
- Hazard Communication Program – Responsible staff; training; SDS records, project specific list of chemical; location of the program and SDS records.
- Means of Egress – Information regarding free and unobstructed egress from all parts of the building or structure; exit marking; maintenance of means of egress, etc.
- Employee Emergency Action Plan – Project specific: responsible staff, emergency alarm system, evacuation procedure, procedure to account for employees after evacuation, etc.
- Evacuation Plan – Project specific evacuation plan (drawing/scheme) with exists and evacuation routes.
- Protection of Underground Facilities and Utilities, including responsible staff.
- Ionizing/Nonionizing Radiation – Competent person, license and qualification requirements, type of radiation, employees exposure and protection, etc.
- Material Handling, Storage, Use and Disposal – Project specific information regarding material storage and disposal.
- Signs, Signals, and Barricades – Use of danger/warning signs, sidewalk closure, safety instruction signs, pedestrian fencing and barricades, etc.
- Scaffold – Project specific scaffold types, training, scaffold drawings, competent person, criteria for project specific scaffold, falling object protection.

- Welding and Cutting – project specific procedure for welding and cutting, including all necessary safety requirements such as fire prevention, personal protective equipment, hot work permits, FDNY certificate requirements.
- Fall Protection – Project specific information regarding selected fall protection systems, fall protection plan.
- Cranes, Derrick, Hoists, Elevators, Conveyors – project specific equipment information including type, rated load capacity, manufacture specification requirements, competent person, exposure to falling load, inspection, recordkeeping, clearance requirements, communication procedure, ground lines, permits.
- Excavation Safety – Competent person, project specific protective system.
- Maintenance and Protection of Traffic Plan – Project specific MPT plan, flagmen training.
- Steel Erection – Site specific erection plan, requirements for applicable written notifications, competent person.
- Demolition – Engineering survey, including written evidence, disconnection of all effected utilities, identification of all hazardous chemicals, materials, gases, etc., floor openings, chutes, inspection and maintenance of all stairs/passageways, removal of materials/debris/structural elements, lock out/tag out, competent person.
- Blasting and the Use of Explosives – Project specific safety procedures, warning signs, training/qualification, transportation, storage and use of explosives, inspection.
- Toxic and Hazardous Substances – Safety procedures for substances to be used on project.
- Noise Mitigation Plan – Completed project specific Noise Mitigation Plan.
- Confined Space Program – Project specific Confined Space Program, responsible staff, training records, equipment information, rescue procedure, list of project specific confined spaces, forms.
- Construction Vehicles/Heavy Equipment – Type of construction vehicles/heavy equipment to be used on site.
- Dust Mitigation Plan – Completed project specific Dust Mitigation Plan.

The most critical component of the Site Safety Plan is the Job Hazard Analysis (JHA) section. The JHA form is a written document prepared by the contractor. The contractor must conduct a site and task assessment JHA to identify the major job steps and any potential safety or environmental hazards related to performance of the work, eliminate or implement controls for the potential hazards, and identify proper personal protective equipment for the task. The JHA shall be communicated to all contractor/subcontractor personnel on site.
The initial Job Hazard Assessment form shall be included in the contractor's Site Safety Plan and the current form shall be available at the construction site for reference.

Certain DDC programs, such as Job Order Contracting System (JOCS), may not necessarily require Site Safety Plans. The JOCS contractor shall submit a Safety Program. The Site Safety Plan requirement for the JOCS contractor will be determined by QA&CS based on a project work scope, construction activities and project location. In addition, certain DDC Operating Units may establish client-specific program or safety requirements. The contractor's Site Safety Plan must address such client-specific program or safety requirements.

VII. KICK-OFF MEETINGS/PRE-CONSTRUCTION AND SAFETY REVIEW

RE/CPM shall invite QA&CS Construction Safety Unit to the construction kick-off meeting. A QA&CS representative will participate in this meeting with the Contractor and RE/CPM prior to the start of the project for the purpose of:

A. Reviewing the safety issues detailed in the contract.
B. Reviewing the Site Safety Plan.
C. Reviewing any new issues or information that was not previously addressed.
D. Discussing planned inspections and audits of the site by QA&CS personnel.

VIII. EVALUATION DURING WORK IN PROGRESS

The Contractor's adherence to these Safety Requirements will be monitored throughout the project. This will be accomplished by the following:

A. Use of a safety checklist by a representative of the Construction Safety Unit or other designated DDC representative or Consultant during regular, unannounced inspections of the job site. Field Exit Conferences will be held with the RE/CPM, Contractor Project Safety Representatives.

B. The RE/CPM will continually monitor the safety and environmental performance of the contractor's employees and work methods. Deficiencies shall be brought to the attention of the contractor's representative on site for immediate correction. The DDC representative will maintain a written record of these deficiencies and have these records available upon request. Any critical deficiencies shall be immediately reported to QA&CS phone# (718) 391-1624 or (718) 391-1911.

C. If the Contractor's safety performance during the project is not up to DDC standards (safety performance measure, accident/incident rate, etc.) the Director – QA&CS, or his/her designee will meet with the Contractor's Project Safety Representative and or Project Safety Manager, the DDC Project Manager, the RE/CPM, and the DDC Environmental Specialist (if environmental issues are involved). The purpose of this meeting is to 1) determine the level of non-compliance; 2) explain and clarify the safety/environmental provisions; 3) agree on a future course of action to correct the deficiencies.

D. If the deficiencies continue to occur with inadequate attention by the contractor, this shall, among other remedies available, be grounds for default.

E. The contractor shall within 1 hour inform the RE/CPM/CM of all accidents/incidents including all fatalities, any injuries to employees or members of the general public, and property damage (e.g., structural damage, equipment rollovers, utility damage, loads dropped from crane). The RE/CPM shall notify the Construction Safety Unit as per DDC's Construction Safety Emergency and Accident Notification and Response Protocol and shall maintain a record of all contractor accidents/incidents for the project.

F. The Construction Safety Unit shall be notified within two (2) hours of the start of any NYS-DOL/ NYC-COSH/ OSHA/ EPA inspections.

IX. SAFETY PERFORMANCE EVALUATION

The contractor's safety record, including accident/incident history and DDC safety inspection results, will be considered as part of the Contractor's performance evaluation at the conclusion of the project. Poor safety performance during the course of the project shall be a reason to rate a Contractor unsatisfactory which may be reflected in the City's Vendex system and will be considered for future procurement actions as set forth in the City's Procurement Policy Board Rules.

CITY OF NEW YORK

STANDARD CONSTRUCTION CONTRACT

DECEMBER 2013

(NO TEXT ON THIS PAGE)

CITY OF NEW YORK
STANDARD CONSTRUCTION CONTRACT

TABLE OF CONTENTS

CHAPTER I
THE CONTRACT AND DEFINITIONS

ARTICLE 1.	THE CONTRACT	1
ARTICLE 2.	DEFINITIONS	1

CHAPTER II
THE WORK AND ITS PERFORMANCE

ARTICLE 3.	CHARACTER OF THE WORK	4
ARTICLE 4.	MEANS AND METHODS OF CONSTRUCTION	4
ARTICLE 5.	COMPLIANCE WITH LAWS	5
ARTICLE 6.	INSPECTION	10
ARTICLE 7.	PROTECTION OF WORK AND OF PERSONS AND PROPERTY; NOTICES AND INDEMNIFICATION	11

CHAPTER III
TIME PROVISIONS

ARTICLE 8.	COMMENCEMENT AND PROSECUTION OF THE WORK	12
ARTICLE 9.	PROGRESS SCHEDULES	12
ARTICLE 10.	REQUESTS FOR INFORMATION OR APPROVAL	13
ARTICLE 11.	NOTICE OF CONDITIONS CAUSING DELAY AND DOCUMENTATION OF DAMAGES CAUSED BY DELAY	13
ARTICLE 12.	COORDINATION WITH OTHER CONTRACTORS	17
ARTICLE 13.	EXTENSION OF TIME FOR PERFORMANCE	18
ARTICLE 14.	COMPLETION AND FINAL ACCEPTANCE OF THE WORK	21
ARTICLE 15.	LIQUIDATED DAMAGES	22
ARTICLE 16.	OCCUPATION OR USE PRIOR TO COMPLETION	22

CHAPTER IV
SUBCONTRACTS AND ASSIGNMENTS

ARTICLE 17.	SUBCONTRACTS	23
ARTICLE 18.	ASSIGNMENTS	25

CITY OF NEW YORK
STANDARD CONSTRUCTION CONTRACT

TABLE OF CONTENTS

CHAPTER V
CONTRACTOR'S SECURITY AND GUARANTY

ARTICLE 19.	SECURITY DEPOSIT	26
ARTICLE 20.	PAYMENT GUARANTEE	26
ARTICLE 21.	RETAINED PERCENTAGE	29
ARTICLE 22.	INSURANCE	29
ARTICLE 23.	MONEY RETAINED AGAINST CLAIMS	35
ARTICLE 24.	MAINTENANCE AND GUARANTY	36

CHAPTER VI
CHANGES, EXTRA WORK AND DOCUMENTATION OF CLAIM

ARTICLE 25.	CHANGES	37
ARTICLE 26.	METHODS OF PAYMENT FOR OVERRUNS AND EXTRA WORK	37
ARTICLE 27.	RESOLUTION OF DISPUTES	40
ARTICLE 28.	RECORD KEEPING FOR EXTRA OR DISPUTED WORK OR WORK ON A TIME & MATERIALS BASIS	44
ARTICLE 29.	OMITTED WORK	45
ARTICLE 30.	NOTICE AND DOCUMENTATION OF COSTS AND DAMAGES; PRODUCTION OF FINANCIAL RECORDS	45

CHAPTER VII
POWERS OF THE RESIDENT ENGINEER, THE ENGINEER OR ARCHITECT AND THE COMMISSIONER

ARTICLE 31.	THE RESIDENT ENGINEER	46
ARTICLE 32.	THE ENGINEER OR ARCHITECT OR PROJECT MANAGER	47
ARTICLE 33.	THE COMMISSIONER	47
ARTICLE 34.	NO ESTOPPEL	48

CHAPTER VIII
LABOR PROVISIONS

ARTICLE 35.	EMPLOYEES	48
ARTICLE 36.	NO DISCRIMINATION	50
ARTICLE 37.	LABOR LAW REQUIREMENTS	52
ARTICLE 38.	PAYROLL REPORTS	57
ARTICLE 39.	DUST HAZARDS	58

TABLE OF CONTENTS

CHAPTER IX
PARTIAL AND FINAL PAYMENTS

ARTICLE 40.	CONTRACT PRICE	58
ARTICLE 41.	BID BREAKDOWN ON LUMP SUM	58
ARTICLE 42.	PARTIAL PAYMENTS	58
ARTICLE 43.	PROMPT PAYMENT	59
ARTICLE 44.	SUBSTANTIAL COMPLETION PAYMENT	59
ARTICLE 45.	FINAL PAYMENT	60
ARTICLE 46.	ACCEPTANCE OF FINAL PAYMENT	61
ARTICLE 47.	APPROVAL BY PUBLIC DESIGN COMMISSION	62

CHAPTER X
CONTRACTOR'S DEFAULT

ARTICLE 48.	COMMISSIONER'S RIGHT TO DECLARE CONTRACTOR IN DEFAULT	62
ARTICLE 49.	EXERCISE OF THE RIGHT TO DECLARE DEFAULT	64
ARTICLE 50.	QUITTING THE SITE	64
ARTICLE 51.	COMPLETION OF THE WORK	64
ARTICLE 52.	PARTIAL DEFAULT	64
ARTICLE 53.	PERFORMANCE OF UNCOMPLETED WORK	65
ARTICLE 54.	OTHER REMEDIES	65

CHAPTER XI
MISCELLANEOUS PROVISIONS

ARTICLE 55.	CONTRACTOR'S WARRANTIES	66
ARTICLE 56.	CLAIMS AND ACTIONS THEREON	66
ARTICLE 57.	INFRINGEMENT	66
ARTICLE 58.	NO CLAIM AGAINST OFFICERS, AGENTS OR EMPLOYEES	67
ARTICLE 59.	SERVICE OF NOTICES	67
ARTICLE 60.	UNLAWFUL PROVISIONS DEEMED STRICKEN FROM CONTRACT	67
ARTICLE 61.	ALL LEGAL PROVISIONS DEEMED INCLUDED	67
ARTICLE 62.	TAX EXEMPTION	67
ARTICLE 63.	INVESTIGATION(S) CLAUSE	69
ARTICLE 64.	TERMINATION BY THE CITY	71
ARTICLE 65.	CHOICE OF LAW, CONSENT TO JURISDICTION AND VENUE	73

TABLE OF CONTENTS

CHAPTER XI (CONT'D)
MISCELLANEOUS PROVISIONS

ARTICLE 66.	PARTICIPATION IN AN INTERNATIONAL BOYCOTT	74
ARTICLE 67.	LOCALLY BASED ENTERPRISE PROGRAM	74
ARTICLE 68.	ANTITRUST	75
ARTICLE 69.	MACBRIDE PRINCIPLES PROVISIONS	75
ARTICLE 70	ELECTRONIC FILING/NYC DEVELOPMENT HUB	77
ARTICLE 71.	PROHIBITION OF TROPICAL HARDWOODS	77
ARTICLE 72.	CONFLICTS OF INTEREST	78
ARTICLE 73.	MERGER CLAUSE	78
ARTICLE 74.	STATEMENT OF WORK	78
ARTICLE 75.	COMPENSATION TO BE PAID TO CONTRACTOR	78
ARTICLE 76:	ELECTRONIC FUNDS TRANSFER	78
ARTICLE 77:	RECORDS RETENTION	79
ARTICLE 78:	PARTICIPATION BY MINORITY-OWNED AND WOMEN-OWNED BUSINESS ENTERPRISES IN CITY PROCUREMENT	79

SIGNATURES	87
ACKNOWLEDGMENT BY CORPORATION	88
ACKNOWLEDGMENT BY PARTNERSHIP	88
ACKNOWLEDGMENT BY INDIVIDUAL	88
ACKNOWLEDGMENT BY COMMISSIONER	89
AUTHORITY	90
COMPTROLLER'S CERTIFICATE	90
MAYOR'S CERTIFICATE	91
PERFORMANCE BOND #1	92
PERFORMANCE BOND #2	96
PAYMENT BOND	100

WITNESSETH:

The parties, in consideration of the mutual agreements contained herein, agree as follows:

CHAPTER I
THE CONTRACT AND DEFINITIONS

ARTICLE 1. THE CONTRACT

1.1 Except for titles, subtitles, headings, running headlines, tables of contents and indices (all of which are printed herein merely for convenience), the following, except for such portions thereof as may be specifically excluded, shall be deemed to be part of this Contract:

1.1.1 All provisions required by law to be inserted in this Contract, whether actually inserted or not;

1.1.2 The Contract Drawings and Specifications;

1.1.3 The General Conditions and Special Conditions, if any;

1.1.4 The Contract;

1.1.5 The Information for Bidders; Request for Proposals; Notice of Solicitation and Proposal For Bids; Bid or Proposal, and, if used, the Bid Booklet;

1.1.6 All Addenda issued prior to the receipt of the bids; the Notice of Award; Performance and Payment Bonds, if required; and the Notice to Proceed or the Order to Work.

1.2 Should any conflict occur in or between the Drawings and Specifications, the Contractor shall be deemed to have estimated the most expensive way of doing the Work, unless the Contractor shall have asked for and obtained a decision in writing from the Commissioner of the Agency that is entering into this Contract, before the submission of its bid, as to what shall govern.

ARTICLE 2. DEFINITIONS

2.1 The following words and expressions, or pronouns used in their stead, shall, wherever they appear in this Contract, be construed as follows, unless a different meaning is clear from the context:

2.1.1 **"Addendum"** or **"Addenda"** shall mean the additional Contract provisions and/or technical clarifications issued in writing by the Commissioner prior to the receipt of bids.

2.1.2 **"Agency"** shall mean a city, county, borough or other office, position, department, division, bureau, board or commission, or a corporation, institution or agency of government, the expenses of which are paid in whole or in part from the City treasury.

2.1.3 **"Agency Chief Contracting Officer" (ACCO)** shall mean a person delegated authority by the Commissioner to organize and supervise the procurement activity of subordinate Agency staff in conjunction with the CCPO, or his/her duly authorized representative.

2.1.4 **"Allowance"** shall mean a sum of money which the Agency may include in the total amount of the Contract for such specific contingencies as the Agency believes may be necessary to complete the Work, *e.g.*, lead or asbestos remediation, and for which the Contractor will be paid on the basis of stipulated unit prices or a formula set forth in the Contract or negotiated between the parties provided, however, that if the Contractor is not directed to use the Allowance, the Contractor shall have no right to such money and it shall be deducted from the total amount of the Contract.

2.1.5 **"City"** shall mean the City of New York.

2.1.6 **"City Chief Procurement Officer" (CCPO)** shall mean a person delegated authority by the Mayor to coordinate and oversee the procurement activity of Mayoral agency staff, including the ACCO and any offices which have oversight responsibility for the procurement of construction, or his/her duly authorized representative.

2.1.7 **"Commissioner"** shall mean the head of the Agency that has entered into this Contract, or his/her duly authorized representative.

2.1.8 **"Comptroller"** shall mean the Comptroller of the City of New York.

2.1.9 **"Contract"** or **"Contract Documents"** shall mean each of the various parts of the contract referred to in Article 1 hereof, both as a whole and severally.

2.1.10 **"Contract Drawings"** shall mean only those drawings specifically entitled as such and listed in the Specifications or in any Addendum, or any drawings furnished by the Commissioner, pertaining or supplemental thereto.

2.1.11 **"Contract Work"** shall mean everything required to be furnished and done by the Contractor by any one or more of the parts of the Contract referred to in Article 1, except Extra Work as hereinafter defined.

2.1.12 **"Contractor"** shall mean the entity which executed this Contract, whether a corporation, firm, partnership, joint venture, individual, or any combination thereof, and its, their, his/her successors, personal representatives, executors, administrators, and assigns, and any person, firm, partnership, joint venture, individual, or corporation which shall at any time be substituted in the place of the Contractor under this Contract.

2.1.13 **"Days"** shall mean calendar days, except where otherwise specified.

2.1.14 **"Engineer"** or **"Architect"** or **"Project Manager"** shall mean the person so designated in writing by the Commissioner in the Notice to Proceed or the Order to Work to act as such in relation to this Contract, including a private Architect or Engineer or Project Manager, as the case may be. Subject to written approval by the Commissioner, the Engineer, Architect or Project Manager may designate an authorized representative.

2.1.15 **"Engineering Audit Officer" (EAO)** shall mean the person so designated by the Commissioner to perform responsible auditing functions hereunder.

2.1.16 **"Extra Work"** shall mean Work other than that required by the Contract at the time of award which is authorized by the Commissioner pursuant to Chapter VI of this Contract.

2.1.17 **"Federal-Aid Contract"** shall mean a contract in which the United States (federal) Government provides financial funding as so designated in the Information for Bidders.

2.1.18 **"Final Acceptance"** shall mean final written acceptance of all the Work by the Commissioner, a copy of which shall be sent to the Contractor.

2.1.19 **"Final Approved Punch List"** shall mean a list, approved pursuant to Article 14.2.2, specifying those items of Work to be completed by the Contractor after Substantial Completion and dates for the completion of each item of Work.

2.1.20 **"Law"** or **"Laws"** shall mean the Constitution of the State of New York, the New York City Charter, the New York City Administrative Code, a statute of the United States or of the State of New York, a local law of the City of New York, any ordinance, rule or regulation having the force of law, or common law.

2.1.21 **"Materialman"** shall mean any corporation, firm, partnership, joint venture, or individual, other than employees of the Contractor, who or which contracts with the Contractor or any Subcontractor, to fabricate or deliver, or who actually fabricates or delivers, plant, materials or equipment to be incorporated in the Work.

2.1.22 **"Means and Methods of Construction"** shall mean the labor, materials, temporary structures, tools, plant, and construction equipment, and the manner and time of their use, necessary to accomplish the result intended by this Contract.

2.1.23**"Notice to Proceed" or "Order to Work"** shall mean the written notice issued by the Commissioner specifying the time for commencement of the Work and the Engineer, Architect or Project Manager.

2.1.24 **"Other Contractor(s)"** shall mean any contractor (other than the entity which executed this Contract or its Subcontractors) who or which has a contract with the City for work on or adjacent to the building or Site of the Work.

2.1.25 **"Payroll Taxes"** shall mean State Unemployment Insurance (SUI), Federal Unemployment Insurance (FUI), and payments pursuant to the Federal Insurance Contributions Act (FICA).

2.1.26 **"Project"** shall mean the public improvement to which this Contract relates.

2.1.27 **"Procurement Policy Board" (PPB)** shall mean the Agency of the City of New York whose function is to establish comprehensive and consistent procurement policies and rules which shall have broad application throughout the City.

2.1.28 **"Required Quantity"** in a unit price Contract shall mean the actual quantity of any item of Work or materials which is required to be performed or furnished in order to comply with the Contract.

2.1.29 **"Resident Engineer"** shall mean the representative of the Commissioner duly designated by the Commissioner to be his/her representative at the site of the Work.

2.1.30 **"Site"** shall mean the area upon or in which the Contractor's operations are carried on, and such other areas adjacent thereto as may be designated as such by the Engineer.

2.1.31 **"Small Tools"** shall mean items that are ordinarily required for a worker's job function, including but not limited to, equipment that ordinarily has no licensing, insurance

or substantive storage costs associated with it; such as circular and chain saws, impact drills, threaders, benders, wrenches, socket tools, etc.

2.1.32 **"Specifications"** shall mean all of the directions, requirements, and standards of performance applying to the Work as hereinafter detailed and designated under the Specifications.

2.1.33 **"Subcontractor"** shall mean any person, firm or corporation, other than employees of the Contractor, who or which contracts with the Contractor or with its subcontractors to furnish, or actually furnishes labor, or labor and materials, or labor and equipment, or superintendence, supervision and/or management at the Site. Wherever the word Subcontractor appears, it shall also mean sub-Subcontractor.

2.1.34 **"Substantial Completion"** shall mean the written determination by the Engineer that the Work required under this Contract is substantially, but not entirely, complete and the approval of the **Final Approved Punch List**.

2.1.35 **"Work"** shall mean all services required to complete the Project in accordance with the Contract Documents, including without limitation, labor, material, superintendence, management, administration, equipment, and incidentals, and obtaining any and all permits, certifications and licenses as may be necessary and required to complete the Work, and shall include both Contract Work and Extra Work.

CHAPTER II
THE WORK AND ITS PERFORMANCE

ARTICLE 3. CHARACTER OF THE WORK

3.1 Unless otherwise expressly provided in the **Contract Drawings**, **Specifications,** and **Addenda**, the **Work** shall be performed in accordance with the best modern practice, utilizing, unless otherwise specified in writing, new and unused materials of standard first grade quality and workmanship and design of the highest quality, to the satisfaction of the **Commissioner**.

ARTICLE 4. MEANS AND METHODS OF CONSTRUCTION

4.1 Unless otherwise expressly provided in the **Contract Drawings**, **Specifications,** and **Addenda**, the **Means and Methods of Construction** shall be such as the **Contractor** may choose; subject, however, to the **Engineer's** right to reject the **Means and Methods of Construction** proposed by the **Contractor** which in the opinion of the **Engineer**:

4.1.1 Will constitute or create a hazard to the **Work**, or to persons or property; or

4.1.2 Will not produce finished **Work** in accordance with the terms of the **Contract**; or

4.1.3 Will be detrimental to the overall progress of the **Project**.

4.2 The **Engineer's** approval of the **Contractor's Means and Methods of Construction**, or his/her failure to exercise his/her right to reject such means or methods, shall not relieve the **Contractor** of its obligation to complete the **Work** as provided in this **Contract**; nor shall the exercise of such right to reject create a cause of action for damages.

ARTICLE 5. COMPLIANCE WITH LAWS

5.1 The **Contractor** shall comply with all **Laws** applicable to this **Contract** and to the **Work** to be done hereunder.

5.2 Procurement Policy Board Rules: This **Contract** is subject to the Rules of the **PPB** ("**PPB** Rules") in effect at the time of the bid opening for this **Contract**. In the event of a conflict between the **PPB** Rules and a provision of this **Contract**, the **PPB** Rules shall take precedence.

5.3 Noise Control Code provisions.

5.3.1 In accordance with the provisions of Section 24-216(b) of the Administrative Code of the **City** ("Administrative Code"), Noise Abatement Contract Compliance, devices and activities which will be operated, conducted, constructed or manufactured pursuant to this **Contract** and which are subject to the provisions of the **City** Noise Control Code shall be operated, conducted, constructed, or manufactured without causing a violation of the Administrative Code. Such devices and activities shall incorporate advances in the art of noise control development for the kind and level of noise emitted or produced by such devices and activities, in accordance with regulations issued by the **Commissioner** of the **City** Department of Environmental Protection.

5.3.2 The **Contractor** agrees to comply with Section 24-219 of the Administrative Code and implementing rules codified at 15 Rules of the City of New York ("RCNY") Section 28-100 *et seq*. In accordance with such provisions, the **Contractor**, if the **Contractor** is the responsible party under such regulations, shall prepare and post a Construction Noise Mitigation Plan at each **Site**, in which the **Contractor** shall certify that all construction tools and equipment have been maintained so that they operate at normal manufacturers operating specifications. If the **Contractor** cannot make this certification, it must have in place an Alternative Noise Mitigation Plan approved by the **City** Department of Environmental Protection. In addition, the **Contractor**'s certified Construction Noise Mitigation Plan is subject inspection by the **City** Department of Environmental Protection in accordance with Section 28-101 of Title 15 of RCNY. No **Contract Work** may take place at a **Site** unless there is a Construction Noise Mitigation Plan or approved Alternative Noise Mitigation Plan in place. In addition, the **Contractor** shall create and implement a noise mitigation training program. Failure to comply with these requirements may result in fines and other penalties pursuant to the applicable provisions of the Administrative Code and RCNY.

5.4 Ultra Low Sulfur Diesel Fuel: In accordance with the provisions of Section 24-163.3 of the Administrative Code, the **Contractor** specifically agrees as follows:

5.4.1 Definitions. For purposes of this Article 5.4, the following definitions apply:

5.4.1(a) "Contractor" means any person or entity that enters into a Public Works Contract with a **City Agency**, or any person or entity that enters into an agreement with such person or entity, to perform work or provide labor or services related to such Public Works Contract.

5.4.1(b) "Motor Vehicle" means any self-propelled vehicle designed for transporting persons or property on a street or highway.

5.4.1(c) "Nonroad Engine" means an internal combustion engine (including the fuel system) that is not used in a Motor Vehicle or a vehicle used solely for competition, or that is not subject to standards promulgated under Section 7411 or Section 7521 of

Title 42 of the United States Code, except that this term shall apply to internal combustion engines used to power generators, compressors or similar equipment used in any construction program or project.

5.4.1(d) "Nonroad Vehicle" means a vehicle that is powered by a Nonroad Engine, fifty (50) horsepower and greater, and that is not a Motor Vehicle or a vehicle used solely for competition, which shall include, but not be limited to, excavators, backhoes, cranes, compressors, generators, bulldozers, and similar equipment, except that this term shall not apply to horticultural maintenance vehicles used for landscaping purposes that are powered by a Nonroad Engine of sixty-five (65) horsepower or less and that are not used in any construction program or project.

5.4.1(e) "Public Works Contract" means a contract with a **City Agency** for a construction program or project involving the construction, demolition, restoration, rehabilitation, repair, renovation, or abatement of any building, structure, tunnel, excavation, roadway, park or bridge; a contract with a **City Agency** for the preparation for any construction program or project involving the construction, demolition, restoration, rehabilitation, repair, renovation, or abatement of any building, structure, tunnel, excavation, roadway, park or bridge; or a contract with a **City Agency** for any final work involved in the completion of any construction program or project involving the construction, demolition, restoration, rehabilitation, repair, renovation, or abatement of any building, structure, tunnel, excavation, roadway, park or bridge.

5.4.1(f) "Ultra Low Sulfur Diesel Fuel" means diesel fuel that has a sulfur content of no more than fifteen parts per million (15 ppm).

5.4.2 Ultra Low Sulfur Diesel Fuel

5.4.2(a) All **Contractors** shall use Ultra Low Sulfur Diesel Fuel in diesel-powered Nonroad Vehicles in the performance of this **Contract**.

5.4.2(b) Notwithstanding the requirements of Article 5.4.2(a), **Contractors** may use diesel fuel that has a sulfur content of no more than thirty parts per million (30 ppm) to fulfill the requirements of this Article 5.4.2, where the Commissioner of the **City** Department of Environmental Protection ("DEP Commissioner") has issued a determination that a sufficient quantity of Ultra Low Sulfur Diesel Fuel is not available to meet the needs of **Agencies** and **Contractors**. Any such determination shall expire after six (6) months unless renewed.

5.4.2(c) **Contractors** shall not be required to comply with this Article 5.4.2 where the **City Agency** letting this **Contract** makes a written finding, which is approved, in writing, by the DEP Commissioner, that a sufficient quantity of Ultra Low Sulfur Diesel Fuel, or diesel fuel that has a sulfur content of no more than thirty parts per million (30 ppm) is not available to meet the requirements of Section 24-163.3 of the Administrative Code, provided that such **Contractor** in its fulfillment of the requirements of this **Contract**, to the extent practicable, shall use whatever quantity of Ultra Low Sulfur Diesel Fuel or diesel fuel that has a sulfur content of no more than thirty parts per million (30 ppm) is available. Any finding made pursuant to this Article 5.4.2(c) shall expire after sixty (60) **Days**, at which time the requirements of this Article 5.4.2 shall be in full force and effect unless the **City Agency** renews the finding in writing and such renewal is approved by the DEP Commissioner.

5.4.2(d) **Contractors** may check on determinations and approvals issued by the DEP Commissioner pursuant to Section 24-163.3 of the Administrative Code, if any, at www.dep.nyc.gov or by contacting the **City Agency** letting this **Contract**.

5.4.2(e) The requirements of this Article 5.4.2 do not apply where they are precluded by federal or State funding requirements or where the **Contract** is an emergency procurement.

5.4.3 Best Available Technology

5.4.3(a) All **Contractors** shall utilize the best available technology for reducing the emission of pollutants for diesel-powered Nonroad Vehicles in the performance of this **Contract**. For determinations of best available technology for each type of diesel-powered Nonroad Vehicle, **Contractors** shall comply with the regulations of the **City** Department of Environmental Protection, as and when adopted, Chapter 14 of Title 15 of the Rules of the City of New York (RCNY). The **Contractor** shall fully document all steps in the best available technology selection process and shall furnish such documentation to the **City Agency** or the DEP Commissioner upon request. The **Contractor** shall retain all documentation generated in the best available technology selection process for as long as the selected best available technology is in use.

5.4.3(b) No **Contractor** shall be required to replace best available technology for reducing the emission of pollutants or other authorized technology utilized for a diesel-powered Nonroad Vehicle in accordance with the provisions of this Article 5.4.3 within three (3) years of having first utilized such technology for such vehicle.

5.4.3(c) This Article 5.4.3 shall not apply to any vehicle used to satisfy the requirements of a specific Public Works Contract for fewer than twenty (20) **Days**.

5.4.3(d) The **Contractor** shall not be required to comply with this Article 5.4.3 with respect to a diesel-powered Nonroad Vehicle under the following circumstances:

5.4.3(d)(i) Where the **City Agency** makes a written finding, which is approved, in writing, by the DEP Commissioner, that the best available technology for reducing the emission of pollutants as required by this Article 5.4.3 is unavailable for such vehicle, the **Contractor** shall use whatever technology for reducing the emission of pollutants, if any, is available and appropriate for such vehicle.

5.4.3(d)(ii) Where the DEP Commissioner has issued a written waiver based upon the **Contractor** having demonstrated to the DEP Commissioner that the use of the best available technology for reducing the emission of pollutants might endanger the operator of such vehicle or those working near such vehicle, due to engine malfunction, the **Contractor** shall use whatever technology for reducing the emission of pollutants, if any, is available and appropriate for such vehicle, which would not endanger the operator of such vehicle or those working near such vehicle.

5.4.3(d)(iii) In determining which technology to use for the purposes of Articles 5.4.3(d)(i) and 5.4.3(d)(ii) above, the **Contractor** shall primarily consider the reduction in emissions of particulate matter and secondarily consider the reduction in emissions of nitrogen oxides associated with the use of such

technology, which shall in no event result in an increase in the emissions of either such pollutant.

5.4.3(d)(iv) The **Contractor** shall submit requests for a finding or a waiver pursuant to this Article 5.4.3(d) in writing to the DEP Commissioner, with a copy to the **ACCO** of the **City Agency** letting this **Contract**. Any finding or waiver made or issued pursuant to Articles 5.4.3(d)(i) and 5.4.3(d)(ii) above shall expire after one hundred eighty (180) **Days**, at which time the requirements of Article 5.4.3(a) shall be in full force and effect unless the **City Agency** renews the finding, in writing, and the DEP Commissioner approves such finding, in writing, or the DEP Commissioner renews the waiver, in writing.

5.4.3(e) The requirements of this Article 5.4.3 do not apply where they are precluded by federal or State funding requirements or where the **Contract** is an emergency procurement.

5.4.4 Section 24-163 of the Administrative Code. The **Contractor** shall comply with Section 24-163 of the Administrative Code related to the idling of the engines of motor vehicles while parking.

5.4.5 Compliance

5.4.5(a) The **Contractor's** compliance with Article 5.4 may be independently monitored. If it is determined that the **Contractor** has failed to comply with any provision of Article 5.4, any costs associated with any independent monitoring incurred by the **City** shall be reimbursed by the **Contractor**.

5.4.5(b) Any **Contractor** who violates any provision of Article 5.4, except as provided in Article 5.4.5(c) below, shall be liable for a civil penalty between the amounts of one thousand ($1,000) and ten thousand ($10,000) dollars, in addition to twice the amount of money saved by such **Contractor** for failure to comply with Article 5.4.

5.4.5(c) No **Contractor** shall make a false claim with respect to the provisions of Article 5.4 to a **City Agency**. Where a **Contractor** has been found to have done so, such **Contractor** shall be liable for a civil penalty of twenty thousand ($20,000) dollars, in addition to twice the amount of money saved by such **Contractor** in association with having made such false claim.

5.4.6 Reporting

5.4.6(a) For all Public Works Contracts covered by this Article 5.4, the **Contractor** shall report to the **City Agency** the following information:

5.4.6(a)(i) The total number of diesel-powered Nonroad Vehicles used to fulfill the requirements of this Public Works Contract;

5.4.6(a)(ii) The number of such Nonroad Vehicles that were powered by Ultra Low Sulfur Diesel Fuel;

5.4.6(a)(iii) The number of such Nonroad Vehicles that utilized the best available technology for reducing the emission of pollutants, including a breakdown by vehicle model and the type of technology;

5.4.6(a)(iv) The number of such Nonroad Vehicles that utilized such other authorized technology in accordance with Article 5.4.3, including a breakdown by vehicle model and the type of technology used for each such vehicle;

5.4.6(a)(v) The locations where such Nonroad Vehicles were used; and

5.4.6(a)(vi) Where a determination is in effect pursuant to Article 5.4.2(b) or 5.4.2(c), detailed information concerning the **Contractor's** efforts to obtain Ultra Low Sulfur Diesel Fuel or diesel fuel that has a sulfur content of no more than thirty parts per million (30 ppm).

5.4.6(b) The **Contractor** shall submit the information required by Article 5.4.6(a) at the completion of **Work** under the Public Works Contract and on a yearly basis no later than August 1 throughout the term of the Public Works Contract. The yearly report shall cover **Work** performed during the preceding fiscal year (July 1 - June 30).

5.5 Ultra Low Sulfur Diesel Fuel. In accordance with the Coordinated Construction Act for Lower Manhattan, as amended:

5.5.1 Definitions. For purposes of this Article 5.5, the following definitions apply:

5.5.1(a) "Lower Manhattan" means the area to the south of and within the following lines: a line beginning at a point where the United States pierhead line in the Hudson River as it exists now or may be extended would intersect with the southerly line of West Houston Street in the Borough of Manhattan extended, thence easterly along the southerly side of West Houston Street to the southerly side of Houston Street, thence easterly along the southerly side of Houston Street to the southerly side of East Houston Street, thence northeasterly along the southerly side of East Houston Street to the point where it would intersect with the United States pierhead line in the East River as it exists now or may be extended, including tax lots within or immediately adjacent thereto.

5.5.1(b) "Lower Manhattan Redevelopment Project" means any project in Lower Manhattan that is funded in whole or in part with federal or State funding, or any project intended to improve transportation between Lower Manhattan and the two air terminals in the **City** known as LaGuardia Airport and John F. Kennedy International Airport, or between Lower Manhattan and the air terminal in Newark known as Newark Liberty International Airport, and that is funded in whole or in part with federal funding.

5.5.1(c) "Nonroad Engine" means an internal combustion engine (including the fuel system) that is not used in a Motor Vehicle or a vehicle used solely for competition, or that is not subject to standards promulgated under Section 7411 or Section 7521 of Title 42 of the United States Code, except that this term shall apply to internal combustion engines used to power generators, compressors or similar equipment used in any construction program or project.

5.5.1(d) "Nonroad Vehicle" means a vehicle that is powered by a Nonroad Engine, fifty (50) horsepower (HP) and greater, and that is not a Motor Vehicle or a vehicle used solely for competition, which shall include, but not be limited to, excavators, backhoes, cranes, compressors, generators, bulldozers, and similar equipment, except

that this terms shall not apply to horticultural maintenance vehicles used for landscaping purposes that are powered by a Nonroad Engine of sixty-five (65) HP or less and that are not used in any construction program or project.

5.5.1(e) "Ultra Low Sulfur Diesel Fuel" means diesel fuel that has a sulfur content of no more than fifteen parts per million (15 ppm).

5.5.2 Requirements. **Contractors** and **Subcontractors** are required to use only Ultra Low Sulfur Diesel Fuel to power the diesel-powered Nonroad Vehicles with engine HP rating of fifty (50) HP and above used on a Lower Manhattan Redevelopment Project and, where practicable, to reduce the emission of pollutants by retrofitting such Nonroad Vehicles with oxidation catalysts, particulate filters, or technology that achieves lowest particulate matter emissions.

5.6 Pesticides. In accordance with Section 17-1209 of the Administrative Code, to the extent that the **Contractor** or any **Subcontractor** applies pesticides to any property owned or leased by the **City**, the **Contractor,** and any **Subcontractor** shall comply with Chapter 12 of the Administrative Code.

5.7 Waste Treatment, Storage, and Disposal Facilities and Transporters. In connection with the **Work**, the **Contractor** and any **Subcontractor** shall use only those waste treatment, storage, and disposal facilities and waste transporters that possess the requisite license, permit or other governmental approval necessary to treat, store, dispose, or transport the waste, materials or hazardous substances.

5.8 Environmentally Preferable Purchasing. The **Contractor** shall ensure that products purchased or leased by the **Contractor** or any **Subcontractor** for the **Work** that are not specified by the **City** or are submitted as equivalents to a product specified by the **City** comply with the requirements of the New York City Environmentally Preferable Purchasing Program contained in Chapter 11 of Title 43 of the RCNY, pursuant to Chapter 3 of Title 6 of the Administrative Code.

ARTICLE 6. INSPECTION

6.1 During the progress of the **Work** and up to the date of **Final Acceptance**, the **Contractor** shall at all times afford the representatives of the **City** every reasonable, safe, and proper facility for inspecting all **Work** done or being done at the **Site** and also for inspecting the manufacture or preparation of materials and equipment at the place of such manufacture or preparation.

6.2 The **Contractor's** obligation hereunder shall include the uncovering or taking down of finished **Work** and its restoration thereafter; provided, however, that the order to uncover, take down and restore shall be in writing, and further provided that if **Work** thus exposed proves satisfactory, and if the **Contractor** has complied with Article 6.1, such uncovering or taking down and restoration shall be considered an item of **Extra Work** to be paid for in accordance with the provisions of Article 26. If the **Work** thus exposed proves unsatisfactory, the **City** has no obligation to compensate the **Contractor** for the uncovering, taking down or restoration.

6.3 Inspection and approval by the **Commissioner**, the **Engineer**, **Project Manager**, or **Resident Engineer**, of finished **Work** or of **Work** being performed, or of materials and equipment at the place of manufacture or preparation, shall not relieve the **Contractor** of its obligation to perform the **Work** in strict accordance with the **Contract**. Finished or unfinished **Work** not found to be in strict accordance with the **Contract** shall be replaced as directed by the **Engineer**, even though such **Work** may have been previously approved and paid for. Such corrective **Work** is **Contract Work** and shall not be deemed **Extra Work**.

6.4 Rejected **Work** and materials shall be promptly taken down and removed from the **Site**, which must at all times be kept in a reasonably clean and neat condition.

ARTICLE 7. PROTECTION OF WORK AND OF PERSONS AND PROPERTY; NOTICES AND INDEMNIFICATION

7.1 During the performance of the **Work** and up to the date of **Final Acceptance**, the **Contractor** shall be under an absolute obligation to protect the finished and unfinished **Work** against any damage, loss, injury, theft and/or vandalism and in the event of such damage, loss, injury, theft and/or vandalism, it shall promptly replace and/or repair such **Work** at the **Contractor's** sole cost and expense, as directed by the **Resident Engineer**. The obligation to deliver finished **Work** in strict accordance with the **Contract** prior to **Final Acceptance** shall be absolute and shall not be affected by the **Resident Engineer's** approval of, or failure to prohibit, the **Means and Methods of Construction** used by the **Contractor**.

7.2 During the performance of the **Work** and up to the date of **Final Acceptance**, the **Contractor** shall take all reasonable precautions to protect all persons and the property of the **City** and of others from damage, loss or injury resulting from the **Contractor's**, and/or its **Subcontractors'** operations under this **Contract.** The **Contractor's** obligation to protect shall include the duty to provide, place or replace, and adequately maintain at or about the **Site** suitable and sufficient protection such as lights, barricades, and enclosures.

7.3 The **Contractor** shall comply with the notification requirements set forth below in the event of any loss, damage or injury to **Work**, persons or property, or any accidents arising out of the operations of the **Contractor** and/or its **Subcontractors** under this **Contract.**

7.3.1 The **Contractor** shall make a full and complete report in writing to the **Resident Engineer** within three (3) **Days** after the occurrence.

7.3.2 The **Contractor** shall also send written notice of any such event to all insurance carriers that issued potentially responsive policies (including commercial general liability insurance carriers for events relating to the **Contractor**'s own employees) no later than twenty (20) days after such event and again no later than twenty (20) days after the initiation of any claim and/or action resulting therefrom. Such notice shall contain the following information: the number of the insurance policy, the name of the Named Insured, the date and location of the incident, and the identity of the persons injured or property damaged. For any policy on which the **City** and/or the **Engineer**, **Architect**, or **Project Manager** are Additional Insureds, such notice shall expressly specify that "this notice is being given on behalf of the City of New York as Additional Insured, such other Additional Insureds, as well as the Named Insured."

7.3.2(a) Whenever such notice is sent under a policy on which the **City** is an Additional Insured, the **Contractor** shall provide copies of the notice to the **Comptroller,** the **Commissioner** and the **City** Corporation Counsel. The copy to the **Comptroller** shall be sent to the Insurance Unit, NYC Comptroller's Office, 1 Centre Street – Room 1222, New York, New York, 10007. The copy to the **Commissioner** shall be sent to the address set forth in Schedule A of the General Conditions. The copy to the **City** Corporation Counsel shall be sent to Insurance Claims Specialist, Affirmative Litigation Division, New York City Law Department, 100 Church Street, New York, New York 10007.

7.3.2(b) If the **Contractor** fails to provide any of the foregoing notices to any appropriate insurance carrier(s) in a timely and complete manner, the **Contractor** shall indemnify the **City** for all losses, judgments, settlements, and expenses, including reasonable attorneys' fees, arising from an insurer's disclaimer of coverage citing late notice by or on behalf of the **City**.

7.4 To the fullest extent permitted by law, the **Contractor** shall defend, indemnify, and hold the **City**, its employees, and officials (the "Indemnitees") harmless against any and all claims (including but not limited to claims asserted by any employee of the **Contractor** and/or its **Subcontractors**) and costs and expenses of whatever kind (including but not limited to payment or reimbursement of attorneys' fees and disbursements) allegedly arising out of or in any way related to the operations of the **Contractor** and/or its **Subcontractors** in the performance of this **Contract** or from the **Contractor's** and/or its **Subcontractors'** failure to comply with any of the provisions of this **Contract** or of the **Law**. Such costs and expenses shall include all those incurred in defending the underlying claim and those incurred in connection with the enforcement of this Article 7.4 by way of cross-claim, third-party claim, declaratory action or otherwise. The parties expressly agree that the indemnification obligation hereunder contemplates (1) full indemnity in the event of liability imposed against the Indemnitees without negligence and solely by reason of statute, operation of **Law** or otherwise; and (2) partial indemnity in the event of any actual negligence on the part of the Indemnitees either causing or contributing to the underlying claim (in which case, indemnification will be limited to any liability imposed over and above that percentage attributable to actual fault whether by statute, by operation of **Law**, or otherwise). Where partial indemnity is provided hereunder, all costs and expenses shall be indemnified on a pro rata basis.

7.4.1 Indemnification under Article 7.4 or any other provision of the **Contract** shall operate whether or not **Contractor** or its **Subcontractors** have placed and maintained the insurance specified under Article 22.

7.5 The provisions of this Article 7 shall not be deemed to create any new right of action in favor of third parties against the **Contractor** or the **City**.

CHAPTER III
TIME PROVISIONS

ARTICLE 8. COMMENCEMENT AND PROSECUTION OF THE WORK

8.1 The **Contractor** shall commence the **Work** on the date specified in the **Notice to Proceed** or the **Order to Work**. The time for performance of the **Work** under the **Contract** shall be computed from the date specified in the **Notice to Proceed** or the **Order to Work**. **TIME BEING OF THE ESSENCE** to the **City**, the **Contractor** shall thereafter prosecute the **Work** diligently, using such **Means and Methods of Construction** as are in accord with Article 4 herein and as will assure its completion not later than the date specified in this Contract, or on the date to which the time for completion may be extended.

ARTICLE 9. PROGRESS SCHEDULES

9.1 To enable the **Work** to be performed in an orderly and expeditious manner, the **Contractor**, within fifteen (15) **Days** after the **Notice to Proceed** or **Order to Work**, unless otherwise directed by the **Engineer**, shall submit to the **Engineer** a proposed progress schedule based on the Critical Path Method in the form of a bar graph or in such other form as specified by the **Engineer**, and monthly cash flow requirements, showing:

9.1.1 The anticipated time of commencement and completion of each of the various operations to be performed under this **Contract**; and

9.1.2 The sequence and interrelation of each of these operations with the others and with those of other related contracts; and

9.1.3 The estimated time required for fabrication or delivery, or both, of all materials and equipment required for the **Work**, including the anticipated time for obtaining required approvals pursuant to Article 10; and

9.1.4 The estimated amount in dollars the **Contractor** will claim on a monthly basis.

9.2 The proposed schedule shall be revised as directed by the **Engineer**, until finally approved by the **Engineer**, and after such approval, subject to the provisions of Article 11, shall be strictly adhered to by the **Contractor**.

9.3 If the **Contractor** shall fail to adhere to the approved progress schedule, or to the schedule as revised pursuant to Article 11, it shall promptly adopt such other or additional **Means and Methods of Construction**, at its sole cost and expense, as will make up for the time lost and will assure completion in accordance with the approved progress schedule. The approval by the **City** of a progress schedule which is shorter than the time allotted under the **Contract** shall not create any liability for the **City** if the approved progress schedule is not met.

9.4 The **Contractor** will not receive any payments until the proposed progress schedule is submitted.

ARTICLE 10. REQUESTS FOR INFORMATION OR APPROVAL

10.1 From time to time as the **Work** progresses and in the sequence indicated by the approved progress schedule, the **Contractor** shall submit to the **Engineer** a specific request in writing for each item of information or approval required by the **Contractor**. These requests shall state the latest date upon which the information or approval is actually required by the **Contractor**, and shall be submitted in a reasonable time in advance thereof to provide the **Engineer** a sufficient time to act upon such submissions, or any necessary re-submissions thereof.

10.2 The **Contractor** shall not have any right to an extension of time on account of delays due to the **Contractor's** failure to submit requests for the required information or the required approval in accordance with the above requirements.

ARTICLE 11. NOTICE OF CONDITIONS CAUSING DELAY AND DOCUMENTATION OF DAMAGES CAUSED BY DELAY

11.1 After the commencement of any condition which is causing or may cause a delay in completion of the **Work**, including conditions for which the **Contractor** may be entitled to an extension of time, the following notifications and submittals are required:

11.1.1 Within seven (7) **Days** after the commencement of such condition, the **Contractor** must notify the **Engineer** in writing of the existence, nature and effect of such condition upon the approved progress schedule and the **Work**, and must state why and in what respects, if any, the condition is causing or may cause a delay.

11.1.2 If the **Contractor** shall claim to be sustaining damages for delay as provided for in this Article 11, within forty-five (45) **Days** from the time such damages are first incurred, and every thirty (30) **Days** thereafter for as long as such damages are being incurred, the **Contractor** shall submit to the **Commissioner** verified written statements of the details and the amounts of such damages, together with documentary evidence of such damages, ("statement of delay damages") as further detailed in Article 11.6. The **Contractor** may submit any of the above statements within such additional time as may be granted by the **Commissioner** in writing upon written request therefor. On failure of the **Contractor** to strictly comply with all of the foregoing provisions, such claims shall be deemed waived and no right to recover on such claims shall exist. Damages that the **Contractor** may claim in any action arising under or by reason of this **Contract** shall not be different from or in excess of the statements made and documentation provided pursuant to this Article 11.

11.1.3Within 60 days of submission of the final verified statement of claims pursuant to Article 44, the **Commissioner** shall make a determination as to whether a compensable delay has occurred and, if so, the amount of compensation due the **Contractor**. Notwithstanding the above, the **Commissioner** may make a determination as to whether a compensable delay has occurred at any time after the **Contractor's** first submission of a statement of delay damages provided, however, that the amount of compensation due to the **Contractor** will not be determined until the **Commissioner** determines that the **Work** is delayed after the date set for substantial completion.

11.2 Failure of the **Contractor** to strictly comply with the requirements of Article 11.1.1 may, in the discretion of the **Commissioner**, be deemed sufficient cause to deny any extension of time on account of delay arising out of such condition. Failure of the **Contractor** to strictly comply with the requirements of Articles 11.1.1 and 11.1.2 shall be deemed a conclusive waiver by the **Contractor** of any and all claims for damages for delay arising from such condition and no right to recover on such claims shall exist.

11.3 When appropriate and directed by the **Engineer**, the progress schedule shall be revised by the **Contractor** until finally approved by the **Engineer**. The revised progress schedule must be strictly adhered to by the **Contractor**.

11.4 Compensable Delays

11.4.1 The **Contractor** agrees to make claim only for additional costs attributable to delay in the performance of this **Contract** necessarily extending the time for completion of the **Work** or resulting from acceleration directed by the **Commissioner** and required to maintain the **Project** schedule, occasioned solely by any act or omission to act of the **City** listed below. The **Contractor** also agrees that delay from any other cause shall be compensated, if at all, solely by an extension of time to complete the performance of the **Work**.

11.4.1.1 The failure of the **City** to take reasonable measures to coordinate and progress the **Work**, except that the City shall not be responsible for the **Contractor's** obligation to coordinate and progress the **Work** of its **Subcontractors.**

11.4.1.2 Extended delays attributable to the **City** in the review or issuance of change orders, in shop drawing reviews and approvals or as a result of the cumulative impact of multiple change orders, which have a verifiable impact on **Project** costs.

11.4.1.3 The unavailability of the **Site** for an extended period of time that significantly affects the scheduled completion of the **Contract**.

11.4.1.4 The issuance by the **Engineer** of a stop work order relative to a substantial portion of the **Work** for a period exceeding thirty (30) **Days**, that was not brought about through any action or omission of the **Contractor**.

11.4.1.5 Differing site conditions that were neither known nor reasonably ascertainable on a pre-bid inspection of the **Site** or review of the bid documents or other publicly available sources, and that are not ordinarily encountered in the **Project's** geographical area or neighborhood or in the type of **Work** to be performed.

11.4.1.6 Delays caused by the **City's** bad faith or its willful, malicious, or grossly negligent conduct;

11.4.1.7 Delays not contemplated by the parties;

11.4.1.8 Delays so unreasonable that they constitute an intentional abandonment of the **Contract** by the **City**; and

11.4.1.9 Delays resulting from the **City's** breach of a fundamental obligation of the **Contract**.

11.4.2 No claim may be made for any alleged delay in **Substantial Completion** of the **Work** by a date earlier than the date of **Substantial Completion** provided for in Schedule A unless there is a provision in the **Contract** providing for additional compensation for early completion. No claim may be made for any alleged delay in **Substantial Completion** of the **Work** if the work is substantially completed by the date of **Substantial Completion** provided for in Schedule A unless acceleration has been directed by the **Commissioner** to meet the date of **Substantial Completion** set forth in Schedule A.

11.4.3 The provisions of this Article 11 apply only to claims for additional costs attributable to delay and do not preclude determinations by the **Commissioner** allowing reimbursements for additional costs for **Extra Work** pursuant to Articles 25 and 26 of this **Contract**. To the extent that any cost attributable to delay is reimbursed as part of a change order, no additional claim for compensation under this Article 11 shall be allowed.

11.5 Non-Compensable Delays. The **Contractor** agrees to make no claim for, and is deemed to have included in its bid prices for the various items of the **Contract**, the extra/additional costs attributable to any delays caused by or attributable to the items set forth below. For such items, the **Contractor** shall be compensated, if at all, solely by an extension of time to complete the performance of the **Work**, in accordance with the provisions of Article 13. Such extensions of time will be granted, if at all, pursuant to the grounds set forth in Article 13.3.

11.5.1 The acts or omissions of any third parties, including but not limited to **Other Contractors**, public/ governmental bodies (other than **City Agencies**), utilities or private enterprises, who are disclosed in the **Contract Documents** or are ordinarily encountered or generally recognized as related to the **Work**;

11.5.2 Any situation which was within the contemplation of the parties at the time of entering into the **Contract**, including any delay indicated or disclosed in the **Contract Documents** or generally recognized as related to the nature of the **Work**, and/or the existence of any facility or appurtenance owned, operated or maintained by any third party, as indicated or disclosed in the **Contract Documents** or ordinarily encountered or generally recognized as related to the nature of the **Work**;

11.5.3 Restraining orders, injunctions or judgments issued by a court which were caused by a Contractor's submission, action or inaction or by a Contractor's **Means and Methods of**

Construction, or by third parties, unless such order, injunction or judgment was the result of an action or omission by the **City**;

11.5.4 Any labor boycott, strike, picketing, lockout or similar situation;

11.5.5 Any shortages of supplies or materials, or unavailability of equipment, required by the **Contract Work**;

11.5.6 Climatic conditions, storms, floods, droughts, tidal waves, fires, hurricanes, earthquakes, landslides or other catastrophes or acts of God, or acts of war or of the public enemy or terrorist acts, including the **City's** reasonable responses thereto; and

11.5.7 **Extra Work** which does not significantly affect the overall completion of the **Contract**, reasonable delays in the review or issuance of change orders or field orders and/or in shop drawing reviews or approvals.

11.6 Required Content of Submission of Statement of Delay Damages

11.6.1 In the verified written statement of delay damages required by Article 11.1.2, the following information shall be provided by the **Contractor**:

11.6.1.1 For each delay, the start and end dates of the claimed periods of delay and, in addition, a description of the operations that were delayed, an explanation of how they were delayed, and the reasons for the delay, including identifying the applicable act or omission of the City listed in Article 11.4.

11.6.1.2 A detailed factual statement of the claim providing all necessary dates, locations and items of **Work** affected by the claim.

11.6.1.3 The amount of additional compensation sought and a breakdown of that amount into categories as described in Article 26.2, subject to the limitations set forth in Article 11.7.

11.6.1.4 Any additional information requested by the **Commissioner**.

11.7 Recoverable Costs

11.7.1 Delay damages may be recoverable for the following costs actually and necessarily incurred in the performance of the **Work**:

11.7.1.1 Direct labor, including payroll taxes (subject to statutory wage caps) and supplemental benefits, based on time and materials records;

11.7.1.2 Necessary materials (including transportation to the **Site**), based on time and material records;

11.7.1.3 Reasonable rental value of necessary plant and equipment other than small tools, plus fuel/energy costs according to the applicable formula set forth in Articles 26.2.4 and/or 26.2.8, based on time and material records;

11.7.1.4 Insurance and bond costs;

11.7.1.5 Extended field office costs;

11.7.1.6 Extended **Site** overhead; and

11.7.1.7 Extended home office overhead.

11.7.2 Recoverable Subcontractor Costs. When the **Work** is performed by a **Subcontractor**, the **Contractor** may be paid the actual and necessary costs of such subcontracted **Work** as outlined above in Articles 11.7.1.1 through 11.7.1.6, and an

additional overhead of five (5%) percent of the costs outlined in Articles 11.7.1.1 through 11.7.1.3.

11.7.3 Non-Recoverable Costs. The parties agree that the **City** will have no liability for the following items and the **Contractor** agrees it shall make no claim for the following items:

11.7.3.1 Profit, or loss of anticipated or unanticipated profit;

11.7.3.2 Consequential damages, including but not limited to interest on monies in dispute, including interest which is paid on such monies, loss of bonding capacity, bidding opportunities, or interest in investment, or any resulting insolvency;

11.7.3.3 Indirect costs or expenses of any nature;

11.7.3.4 Direct or indirect costs attributable to performance of **Work** where the **Contractor**, because of situations or conditions within its control, has not progressed the **Work** in a satisfactory manner; and

11.7.3.5 Attorneys' fees and dispute and claims preparation expenses.

11.8 Determinations under this Article 11 are not subject to the jurisdiction of the Contract Dispute Resolution Board pursuant to the dispute resolution process set forth in Article 27.

11.9 If the parties agree, pursuant to Article 11.1.3 above, that a compensable delay has occurred and agree on the amount of compensation, payment may be made pursuant to a written change order. Payment pursuant to such change order is subject to pre-audit by the **Engineering Audit Officer,** and may be post-audited by the **Comptroller** and/or the **Agency**.

ARTICLE 12. COORDINATION WITH OTHER CONTRACTORS

12.1 During the progress of the **Work**, **Other Contractors** may be engaged in performing other work or may be awarded other contracts for additional work on this **Project**. In that event, the **Contractor** shall coordinate the **Work** to be done hereunder with the work of such **Other Contractors** and the **Contractor** shall fully cooperate with such **Other Contractors** and carefully fit its own **Work** to that provided under other contracts as may be directed by the **Engineer**. The **Contractor** shall not commit or permit any act which will interfere with the performance of work by any **Other Contractors**.

12.2 If the **Engineer** determines that the **Contractor** is failing to coordinate its **Work** with the work of **Other Contractors** as the **Engineer** has directed, then the **Commissioner** shall have the right to withhold any payments otherwise due hereunder until the **Contractor** completely complies with the **Engineer's** directions.

12.3 The **Contractor** shall notify the **Engineer** in writing if any **Other Contractor** on this **Project** is failing to coordinate its work with the **Work** of this **Contract**. If the **Engineer** finds such charges to be true, the **Engineer** shall promptly issue such directions to the **Other Contractor** with respect thereto as the situation may require. The **City** shall not, however, be liable for any damages suffered by any **Other Contractor's** failure to coordinate its work with the **Work** of this **Contract** or by reason of the **Other Contractor's** failure to promptly comply with the directions so issued by the **Engineer**, or by reason of any **Other Contractor's** default in performance, it being understood that the **City** does not guarantee the responsibility or continued efficiency of any contractor. The **Contractor** agrees to make no claim against

the **City** for any damages relating to or arising out of any directions issued by the **Engineer** pursuant to this Article 12 (including but not limited to the failure of any **Other Contractor** to comply or promptly comply with such directions), or the failure of the **Engineer** to issue any directions, or the failure of any **Other Contractor** to coordinate its work, or the default in performance of any **Other Contractor**.

12.4 The **Contractor** shall indemnify and hold the **City** harmless from any and all claims or judgments for damages and from costs and expenses to which the **City** may be subjected or which it may suffer or incur by reason of the **Contractor's** failure to comply with the **Engineer's** directions promptly; and the **Comptroller** shall have the right to exercise the powers reserved in Article 23 with respect to any claims which may be made for damages due to the **Contractor's** failure to comply with the **Engineer's** directions promptly. Insofar as the facts and **Law** relating to any claim would preclude the **City** from being completely indemnified by the **Contractor**, the **City** shall be partially indemnified by the **Contractor** to the fullest extent provided by **Law**.

12.5 Should the **Contractor** sustain any damage through any act or omission of any **Other Contractor** having a contract with the **City** for the performance of work upon the **Site** or of work which may be necessary to be performed for the proper prosecution of the **Work** to be performed hereunder, or through any act or omission of a subcontractor of such **Other Contractor**, the **Contractor** shall have no claim against the **City** for such damage, but shall have a right to recover such damage from the **Other Contractor** under the provision similar to the following provisions which apply to this **Contract** and have been or will be inserted in the contracts with such **Other Contractors**:

> 12.5.1 Should any **Other Contractor** having or who shall hereafter have a contract with the **City** for the performance of work upon the **Site** sustain any damage through any act or omission of the **Contractor** hereunder or through any act or omission of any **Subcontractor** of the **Contractor**, the **Contractor** agrees to reimburse such **Other Contractor** for all such damages and to defend at its own expense any action based upon such claim and if any judgment or claim (even if the allegations of the action are without merit) against the **City** shall be allowed the **Contractor** shall pay or satisfy such judgment or claim and pay all costs and expenses in connection therewith and agrees to indemnify and hold the **City** harmless from all such claims. Insofar as the facts and **Law** relating to any claim would preclude the **City** from being completely indemnified by the **Contractor**, the **City** shall be partially indemnified by the **Contractor** to the fullest extent provided by **Law**.

12.6 The **City's** right to indemnification hereunder shall in no way be diminished, waived or discharged by its recourse to assessment of liquidated damages as provided in Article 15, or by the exercise of any other remedy provided for by **Contract** or by **Law**.

ARTICLE 13. EXTENSION OF TIME FOR PERFORMANCE

13.1 If performance by the **Contractor** is delayed for a reason set forth in Article 13.3, the **Contractor** may be allowed a reasonable extension of time in conformance with this Article 13 and the **PPB** Rules.

13.2 Any extension of time may be granted only by the **ACCO** or by the Board for the Extension of Time (hereafter "Board") (as set forth below) upon written application by the **Contractor**.

13.3 Grounds for Extension: If such application is made, the **Contractor** shall be entitled to an extension of time for delay in completion of the **Work** caused solely:

13.3.1 By the acts or omissions of the **City**, its officials, agents or employees; or

13.3.2 By the act or omissions of **Other Contractors** on this **Project**; or

13.3.3 By supervening conditions entirely beyond the control of either party hereto (such as, but not limited to, acts of God or the public enemy, excessive inclement weather, war or other national emergency making performance temporarily impossible or illegal, or strikes or labor disputes not brought about by any act or omission of the **Contractor**).

13.3.4 The **Contractor** shall, however, be entitled to an extension of time for such causes only for the number of **Days** of delay which the **ACCO** or the Board may determine to be due solely to such causes, and then only if the **Contractor** shall have strictly complied with all of the requirements of Articles 9 and 10.

13.4 The **Contractor** shall not be entitled to receive a separate extension of time for each of several causes of delay operating concurrently, but, if at all, only for the actual period of delay in completion of the **Work** as determined by the **ACCO** or the Board, irrespective of the number of causes contributing to produce such delay. If one of several causes of delay operating concurrently results from any act, fault or omission of the **Contractor** or of its **Subcontractors** or **Materialmen**, and would of itself (irrespective of the concurrent causes) have delayed the **Work**, no extension of time will be allowed for the period of delay resulting from such act, fault or omission.

13.5 The determination made by the **ACCO** or the Board on an application for an extension of time shall be binding and conclusive on the **Contractor**.

13.6 The **ACCO** or the Board acting entirely within their discretion may grant an application for an extension of time for causes of delay other than those herein referred.

13.7 Permitting the **Contractor** to continue with the **Work** after the time fixed for its completion has expired, or after the time to which such completion may have been extended has expired, or the making of any payment to the **Contractor** after such time, shall in no way operate as a waiver on the part of the **City** of any of its rights under this **Contract**.

13.8 Application for Extension of Time:

13.8.1 Before the **Contractor's** time extension request will be considered, the **Contractor** shall notify the **ACCO** of the condition which allegedly has caused or is causing the delay, and shall submit a written application to the **ACCO** identifying:

13.8.1(a) The **Contractor**; the registration number; and **Project** description;

13.8.1(b) Liquidated damage assessment rate, as specified in the **Contract**;

13.8.1(c) Original total bid price;

13.8.1(d) The original **Contract** start date and completion date;

13.8.1(e) Any previous time extensions granted (number and duration); and

13.8.1(f) The extension of time requested.

13.8.2 In addition, the application for extension of time shall set forth in detail:

13.8.2(a) The nature of each alleged cause of delay in completing the **Work**;

13.8.2(b) The date upon which each such cause of delay began and ended and the number of **Days** attributable to each such cause;

13.8.2(c) A statement that the **Contractor** waives all claims except for those delineated in the application, and the particulars of any claims which the **Contractor** does not agree to waive. For time extensions for **Substantial Completion** and final completion payments, the application shall include a detailed statement of the dollar amounts of each element of claim item reserved; and

13.8.2(d) A statement indicating the **Contractor's** understanding that the time extension is granted only for purposes of permitting continuation of **Contract** performance and payment for **Work** performed and that the **City** retains its right to conduct an investigation and assess liquidated damages as appropriate in the future.

13.9 Analysis and Approval of Time Extensions:

13.9.1 For time extensions for partial payments, a written determination shall be made by the **ACCO** who may, for good and sufficient cause, extend the time for the performance of the **Contract** as follows:

13.9.1(a) If the **Work** is to be completed within six (6) months, the time for performance may be extended for sixty (60) **Days**;

13.9.1(b) If the **Work** is to be completed within less than one (1) year but more than six (6) months, an extension of ninety (90) **Days** may be granted;

13.9.1(c) If the **Contract** period exceeds one (1) year, besides the extension granted in Article 13.9.1(b), an additional thirty (30) **Days** may be granted for each multiple of six (6) months involved beyond the one (1) year period; or

13.9.1(d) If exceptional circumstances exist, the **ACCO** may extend the time for performance beyond the extensions in Articles 13.9.1(a), 13.9.1(b), and 13.9.1(c). In that event, the **ACCO** shall file with the Mayor's Office of Contract Services a written explanation of the exceptional circumstances.

13.9.2 For extensions of time for **Substantial Completion** and final completion payments, the **Engineer**, in consultation with the **ACCO**, shall prepare a written analysis of the delay (including a preliminary determination of the causes of delay, the beginning and end dates for each such cause of delay, and whether the delays are excusable under the terms of this **Contract**). The report shall be subject to review by and approval of the Board, which shall have authority to question its analysis and determinations and request additional facts or documentation. The report as reviewed and made final by the Board shall be made a part of the **Agency** contract file. Neither the report itself nor anything contained therein shall operate as a waiver or release of any claim the **City** may have against the **Contractor** for either actual or liquidated damages.

13.9.3 Approval Mechanism for Time Extensions for **Substantial Completion** or Final Completion Payments: An extension shall be granted only with the approval of the Board which is comprised of the **ACCO** of the **Agency**, the **City** Corporation Counsel, and the **Comptroller**, or their authorized representatives.

13.9.4 Neither the granting of any application for an extension of time to the **Contractor** or any **Other Contractor** on this **Project** nor the papers, records or reports related to any application for or grant of an extension of time or determination related thereto shall be referred to or offered in evidence by the **Contractor** or its attorneys in any action or proceeding.

13.10 No Damage for Delay: The **Contractor** agrees to make no claim for damages for delay in the performance of this **Contract** occasioned by any act or omission to act of the **City** or any of its representatives, except as provided for in Article 11.

ARTICLE 14. COMPLETION AND FINAL ACCEPTANCE OF THE WORK

14.1 Date for **Substantial Completion**: The **Contractor** shall substantially complete the **Work** within the time fixed in Schedule A of the General Conditions, or within the time to which such **Substantial Completion** may be extended.

14.2 Determining the Date of **Substantial Completion**: The **Work** will be deemed to be substantially complete when the two conditions set forth below have been met.

14.2.1 Inspection: The **Engineer** has inspected the **Work** and has made a written determination that it is substantially complete.

14.2.2 Approval of **Final Approved Punch List** and Date for **Final Acceptance**: Following inspection of the **Work**, the **Engineer** shall furnish the **Contractor** with a final punch list, specifying all items of **Work** to be completed and proposing dates for the completion of each specified item of **Work**. The **Contractor** shall then submit in writing to the **Engineer** within ten (10) **Days** of the **Engineer** furnishing the final punch list either acceptance of the dates or proposed alternative dates for the completion of each specified item of **Work**. If the **Contractor** proposes alternative dates, then, within a reasonable time after receipt, the **Engineer**, in a written notification to the **Contractor**, shall approve the **Contractor's** completion dates or, if they are unable to agree, the Engineer shall establish dates for the completion of each item of **Work**. If the **Contractor** neither accepts the dates nor proposes alternative dates within ten (10) **Days**, the schedule proposed by the **Engineer** shall be deemed accepted. The latest completion date specified shall be the date for **Final Acceptance** of the **Work**.

14.3 Date of **Substantial Completion**. The date of approval of the **Final Approved Punch List**, shall be the date of **Substantial Completion**. The date of approval of the **Final Approved Punch List** shall be either (a) if the **Contractor** approves the final punch list and proposed dates for completion furnished by the **Engineer**, the date of the **Contractor**'s approval; or (b) if the **Contractor** neither accepts the dates nor proposes alternative dates, ten (10) **Days** after the **Engineer** furnishes the **Contractor** with a final punch list and proposed dates for completion; or (c) if the **Contractor** proposes alternative dates, the date that the **Engineer** sends written notification to the **Contractor** either approving the **Contractor**'s proposed alternative dates or establishing dates for the completion for each item of **Work**.

14.4 Determining the Date of **Final Acceptance**: The **Work** will be accepted as final and complete as of the date of the **Engineer's** inspection if, upon such inspection, the **Engineer** finds that all items on the **Final Approved Punch List** are complete and no further **Work** remains to be done. The **Commissioner** will then issue a written determination of **Final Acceptance**.

14.5 Request for Inspection: Inspection of the **Work** by the **Engineer** for the purpose of **Substantial Completion** or **Final Acceptance** shall be made within ten (10) **Days** after receipt of the **Contractor's** written request therefor.

14.6 Request for Re-inspection: If upon inspection for the purpose of **Substantial Completion** or **Final Acceptance**, the **Engineer** determines that there are items of **Work** still to be performed, the **Contractor** shall promptly perform them and then request a re-inspection. If upon re-inspection, the **Engineer** determines that the **Work** is substantially complete or finally accepted, the date of such re-inspection shall be the date of **Substantial Completion** or **Final Acceptance**. Re-inspection by the **Engineer** shall be made within ten (10) **Days** after receipt of the **Contractor's** written request therefor.

14.7 Initiation of Inspection by the **Engineer**: If the **Contractor** does not request inspection or re-inspection of the **Work** for the purpose of **Substantial Completion** or **Final Acceptance**, the **Engineer** may initiate such inspection or re-inspection.

ARTICLE 15. LIQUIDATED DAMAGES

15.1 In the event the **Contractor** fails to substantially complete the **Work** within the time fixed for such **Substantial Completion** in Schedule A of the General Conditions, plus authorized time extensions, or if the **Contractor**, in the sole determination of the **Commissioner**, has abandoned the **Work**, the **Contractor** shall pay to the **City** the sum fixed in Schedule A of the General Conditions, for each and every **Day** that the time consumed in substantially completing the **Work** exceeds the time allowed therefor; which said sum, in view of the difficulty of accurately ascertaining the loss which the **City** will suffer by reason of delay in the **Substantial Completion** of the **Work** hereunder, is hereby fixed and agreed as the liquidated damages that the **City** will suffer by reason of such delay, and not as a penalty. This Article 15 shall also apply to the **Contractor** whether or not the **Contractor** is defaulted pursuant to Chapter X of this **Contract**. Neither the failure to assess liquidated damages nor the granting of any time extension shall operate as a waiver or release of any claim the **City** may have against the **Contractor** for either actual or liquidated damages.

15.2 Liquidated damages received hereunder are not intended to be nor shall they be treated as either a partial or full waiver or discharge of the **City's** right to indemnification, or the **Contractor's** obligation to indemnify the **City**, or to any other remedy provided for in this **Contract** or by **Law**.

15.3 The **Commissioner** may deduct and retain out of the monies which may become due hereunder, the amount of any such liquidated damages; and in case the amount which may become due hereunder shall be less than the amount of liquidated damages suffered by the **City**, the **Contractor** shall be liable to pay the difference.

ARTICLE 16. OCCUPATION OR USE PRIOR TO COMPLETION

16.1 Unless otherwise provided for in the **Specifications**, the **Commissioner** may take over, use, occupy or operate any part of the **Work** at any time prior to **Final Acceptance**, upon written notification to the **Contractor**. The **Engineer** shall inspect the part of the **Work** to be taken over, used, occupied, or operated, and will furnish the **Contractor** with a written statement of the **Work**, if any, which remains to be performed on such part. The **Contractor** shall not object to, nor interfere with, the **Commissioner's** decision to exercise the rights granted by Article 16. In the event the **Commissioner** takes over, uses, occupies, or operates any part of the **Work:**

16.1.1 the **Engineer** shall issue a written determination of **Substantial Completion** with respect to such part of the **Work**;

16.1.2 the **Contractor** shall be relieved of its absolute obligation to protect such part of the unfinished **Work** in accordance with Article 7;

16.1.3 the **Contractor's** guarantee on such part of the **Work** shall begin on the date of such use by the **City**; and;

16.1.4 the **Contractor** shall be entitled to a return of so much of the amount retained in accordance with Article 21 as it relates to such part of the **Work**, except so much thereof as may be retained under Articles 24 and 44.

CHAPTER IV
SUBCONTRACTS AND ASSIGNMENTS

ARTICLE 17. SUBCONTRACTS

17.1 The **Contractor** shall not make subcontracts totaling an amount more than the percentage of the total **Contract** price fixed in Schedule A of the General Conditions, without prior written permission from the **Commissioner**. All subcontracts made by the **Contractor** shall be in writing. No **Work** may be performed by a **Subcontractor** prior to the **Contractor** entering into a written subcontract with the **Subcontractor** and complying with the provisions of this Article 17.

17.2 Before making any subcontracts, the **Contractor** shall submit a written statement to the **Commissioner** giving the name and address of the proposed **Subcontractor**; the portion of the **Work** and materials which it is to perform and furnish; the cost of the subcontract; the VENDEX questionnaire if required; the proposed subcontract if requested by the **Commissioner**; and any other information tending to prove that the proposed **Subcontractor** has the necessary facilities, skill, integrity, past experience, and financial resources to perform the **Work** in accordance with the terms and conditions of this **Contract**.

17.3 In addition to the requirements in Article 17.2, **Contractor** is required to list the **Subcontractor** in the web based Subcontractor Reporting System through the City's Payee Information Portal (PIP), available at www.nyc.gov/pip.[1] For each **Subcontractor** listed, **Contractor** is required to provide the following information: maximum contract value, description of **Subcontractor's** Work, start and end date of the subcontract and identification of the **Subcontractor**'s industry. Thereafter, **Contractor** will be required to report in the system the payments made to each **Subcontractor** within 30 days of making the payment. If any of the required information changes throughout the Term of the **Contract**, **Contractor** will be required to revise the information in the system.

Failure of the **Contractor** to list a **Subcontractor** and/or to report **Subcontractor** payments in a timely fashion may result in the **Commissioner** declaring the **Contractor** in default of the **Contract** and will subject **Contractor** to liquidated damages in the amount of $100 per day for each day that the **Contractor** fails to identify a **Subcontractor** along with the required information about the **Subcontractor** and/or fails to report payments to a **Subcontractor**, beyond the time frames set forth herein or in the notice from the **City**. Article 15 shall govern the issue of liquidated damages.

---

[1] In order to use the new system, a PIP account will be required. Detailed instructions on creating a PIP account and using the new system are also available at www.nyc.gov/pip. Additional assistance with PIP may be obtained by emailing the Financial Information Services Agency Help Desk at pip@fisa.nyc.gov.

17.4 If an approved **Subcontractor** elects to subcontract any portion of its subcontract, the proposed sub-subcontract shall be submitted in the same manner as directed above.

17.5 The **Commissioner** will notify the **Contractor** in writing whether the proposed **Subcontractor** is approved. If the proposed **Subcontractor** is not approved, the **Contractor** may submit another proposed **Subcontractor** unless the **Contractor** decides to do the **Work**. No **Subcontractor** shall be permitted to enter or perform any work on the **Site** unless approved.

17.6 Before entering into any subcontract hereunder, the **Contractor** shall provide the proposed **Subcontractor** with a complete copy of this document and inform the proposed **Subcontractor** fully and completely of all provisions and requirements of this **Contract** relating either directly or indirectly to the **Work** to be performed and the materials to be furnished under such subcontract, and every such **Subcontractor** shall expressly stipulate that all labor performed and materials furnished by the **Subcontractor** shall strictly comply with the requirements of this **Contract**.

17.7 Documents given to a prospective **Subcontractor** for the purpose of soliciting the **Subcontractor's** bid shall include either a copy of the bid cover or a separate information sheet setting forth the **Project** name, the **Contract** number (if available), the **Agency** (as noted in Article 2.1.6), and the **Project's** location.

17.8 The **Commissioner's** approval of a **Subcontractor** shall not relieve the **Contractor** of any of its responsibilities, duties, and liabilities hereunder. The **Contractor** shall be solely responsible to the **City** for the acts or defaults of its **Subcontractor** and of such **Subcontractor's** officers, agents, and employees, each of whom shall, for this purpose, be deemed to be the agent or employee of the **Contractor** to the extent of its subcontract.

17.9 If the **Subcontractor** fails to maintain the necessary facilities, skill, integrity, past experience, and financial resources (other than due to the **Contractor's** failure to make payments where required) to perform the **Work** in accordance with the terms and conditions of this **Contract**, the **Contractor** shall promptly notify the **Commissioner** and replace such **Subcontractor** with a newly approved **Subcontractor** in accordance with this Article 17.

17.10 The **Contractor** shall be responsible for ensuring that all **Subcontractors** performing **Work** at the **Site** maintain all insurance required by **Law**.

17.11 The **Contractor** shall promptly, upon request, file with the **Engineer** a conformed copy of the subcontract and its cost. The subcontract shall provide the following:

17.11.1 Payment to **Subcontractors**: The agreement between the **Contractor** and its **Subcontractor** shall contain the same terms and conditions as to method of payment for **Work**, labor, and materials, and as to retained percentages, as are contained in this **Contract**.

17.11.2 Prevailing Rate of Wages: The agreement between the **Contractor** and its **Subcontractor** shall include the prevailing wage rates and supplemental benefits to be paid in accordance with Labor Law Section 220.

17.11.3 Section 6-123 of the Administrative Code: Pursuant to the requirements of Section 6-123 of the Administrative Code, every agreement between the **Contractor** and a **Subcontractor** in excess of fifty thousand ($50,000) dollars shall include a provision that the **Subcontractor** shall not engage in any unlawful discriminatory practice as defined in Title VIII of the Administrative Code (Section 8-101 *et seq.*).

17.11.4 All requirements required pursuant to federal and/or state grant agreement(s), if applicable to the **Work**.

17.12 The **Commissioner** may deduct from the amounts certified under this **Contract** to be due to the **Contractor**, the sum or sums due and owing from the **Contractor** to the **Subcontractors** according to the terms of the said subcontracts, and in case of dispute between the **Contractor** and its **Subcontractor**, or **Subcontractors**, as to the amount due and owing, the **Commissioner** may deduct and withhold from the amounts certified under this **Contract** to be due to the **Contractor** such sum or sums as may be claimed by such **Subcontractor**, or **Subcontractors**, in a sworn affidavit, to be due and owing until such time as such claim or claims shall have been finally resolved.

17.13 On contracts where performance bonds and payment bonds are executed, the **Contractor** shall include on each requisition for payment the following data: **Subcontractor's** name, value of the subcontract, total amount previously paid to **Subcontractor** for **Work** previously requisitioned, and the amount, including retainage, to be paid to the **Subcontractor** for **Work** included in the requisition.

17.14 On **Contracts** where performance bonds and payment bonds are not executed, the **Contractor** shall include with each requisition for payment submitted hereunder, a signed statement from each and every **Subcontractor** and/or **Materialman** for whom payment is requested in such requisition. Such signed statement shall be on the letterhead of the **Subcontractor** and/or **Materialman** for whom payment is requested and shall (i) verify that such **Subcontractor** and/or **Materialman** has been paid in full for all **Work** performed and/or material supplied to date, exclusive of any amount retained and any amount included on the current requisition, and (ii) state the total amount of retainage to date, exclusive of any amount retained on the current requisition.

ARTICLE 18. ASSIGNMENTS

18.1 The **Contractor** shall not assign, transfer, convey or otherwise dispose of this **Contract**, or the right to execute it, or the right, title or interest in or to it or any part thereof, or assign, by power of attorney or otherwise any of the monies due or to become due under this **Contract**, unless the previous written consent of the **Commissioner** shall first be obtained thereto, and the giving of any such consent to a particular assignment shall not dispense with the necessity of such consent to any further or other assignments.

18.2 Such assignment, transfer, conveyance or other disposition of this **Contract** shall not be valid until filed in the office of the **Commissioner** and the **Comptroller**, with the written consent of the **Commissioner** endorsed thereon or attached thereto.

18.3 Failure to obtain the previous written consent of the **Commissioner** to such an assignment, transfer, conveyance or other disposition, may result in the revocation and annulment of this **Contract**. The **City** shall thereupon be relieved and discharged from any further liability to the **Contractor**, its assignees, transferees or sublessees, who shall forfeit and lose all monies therefor earned under the **Contract**, except so much as may be required to pay the **Contractor's** employees.

18.4 The provisions of this clause shall not hinder, prevent, or affect an assignment by the **Contractor** for the benefit of its creditors made pursuant to the **Laws** of the State of New York.

18.5 This **Contract** may be assigned by the **City** to any corporation, agency or instrumentality having authority to accept such assignment.

CHAPTER V
CONTRACTOR'S SECURITY AND GUARANTEE

ARTICLE 19. SECURITY DEPOSIT

19.1 If performance and payment bonds are required, the **City** shall retain the bid security to ensure that the successful bidder executes the **Contract** and furnishes the required payment and performance security within ten (10) **Days** after notice of the award of the **Contract**. If the successful bidder fails to execute the **Contract** and furnish the required payment and performance security, the **City** shall retain such bid security as set forth in the Information for Bidders. If the successful bidder executes the **Contract** and furnishes the required payment and performance security, the **City** shall return the bid security within a reasonable time after the furnishing of such bonds and execution of the **Contract** by the **City**.

19.2 If performance and payment bonds are not required, the bid security shall be retained by the **City** as security for the **Contractor**'s faithful performance of the **Contract**. If partial payments are provided, the bid security will be returned to the **Contractor** after the sum retained under Article 21 equals the amount of the bid security, subject to other provisions of this **Contract**. If partial payments are not provided, the bid security will be released when final payment is certified by the **City** for payment.

19.3 If the **Contractor** is declared in default under Article 48 prior to the return of the deposit, or if any claim is made such as referred to in Article 23, the amount of such deposit, or so much thereof as the **Comptroller** may deem necessary, may be retained and then applied by the **Comptroller**:

19.3.1 To compensate the **City** for any expense, loss or damage suffered or incurred by reason of or resulting from such default, including the cost of re-letting and liquidated damages; or

19.3.2 To indemnify the **City** against any and all claims.

ARTICLE 20. PAYMENT GUARANTEE

20.1 On **Contracts** where one hundred (100%) percent performance bonds and payment bonds are executed, this Article 20 does not apply.

20.2 In the event the terms of this **Contract** do not require the **Contractor** to provide a payment bond or where the **Contract** does not requite a payment bond for one hundred (100%) percent of the **Contract** price, the **City** shall, in accordance with the terms of this Article 20, guarantee payment of all lawful claims for:

20.2.1 Wages and compensation for labor performed and/or services rendered; and

20.2.2 Materials, equipment, and supplies provided, whether incorporated into the **Work** or not, when demands have been filed with the **City** as provided hereinafter by any person, firm, or corporation which furnished labor, material, equipment, supplies, or any combination thereof, in connection with the **Work** performed hereunder (hereinafter referred to as the "beneficiary") at the direction of the **City** or the **Contractor**.

20.3 The provisions of Article 20.2 are subject to the following limitations and conditions:

20.3.1 If the **Contractor** provides a payment bond for a value that is less than one hundred (100%) percent of the value of the **Contract Work**, the payment bond provided by the **Contractor** shall be primary (and non-contributing) to the payment guarantee provided under this Article 20.

20.3.2 The guarantee is made for the benefit of all beneficiaries as defined in Article 20.2 provided that those beneficiaries strictly adhere to the terms and conditions of Article 20.3.4 and 20.3.5.

20.3.3 Nothing in this Article 20 shall prevent a beneficiary providing labor, services or material for the **Work** from suing the **Contractor** for any amounts due and owing the beneficiary by the **Contractor**.

20.3.4 Every person who has furnished labor or material, to the **Contractor** or to a **Subcontractor** of the **Contractor**, in the prosecution of the **Work** and who has not been paid in full therefor before the expiration of a period of ninety (90) **Days** after the date on which the last of the labor was performed or material was furnished by him/her for which the claim is made, shall have the right to sue on this payment guarantee in his/her own name for the amount, or the balance thereof, unpaid at the time of commencement of the action; provided, however, that a person having a direct contractual relationship with a **Subcontractor** of the **Contractor** but no contractual relationship express or implied with the **Contractor** shall not have a right of action upon the guarantee unless he/she shall have given written notice to the **Contractor** within one hundred twenty (120) **Days** from the date on which the last of the labor was performed or the last of the material was furnished, for which his/her claim is made, stating with substantial accuracy the amount claimed and the name of the party to whom the material was furnished or for whom the labor was performed. The notice shall be served by delivering the same personally to the **Contractor** or by mailing the same by registered mail, postage prepaid, in an envelope addressed to the **Contractor** at any place where it maintains an office or conducts its business; provided, however, that where such notice is actually received by the **Contractor** by other means, such notice shall be deemed sufficient.

20.3.5 Except as provided in Labor Law Section 220-g, no action on this payment guarantee shall be commenced after the expiration of the one-year limitations period set forth in Section 137(4)(b) of the State Finance Law.

20.3.6 The **Contractor** shall promptly forward to the **City** any notice or demand received pursuant to Article 20.3.4. The **Contractor** shall inform the **City** of any defenses to the notice or demand and shall forward to the **City** any documents the **City** requests concerning the notice or demand.

20.3.7 All demands made against the **City** by a beneficiary of this payment guarantee shall be presented to the **Engineer** along with all written documentation concerning the demand which the **Engineer** deems reasonably appropriate or necessary, which may include, but shall not be limited to: the subcontract; any invoices presented to the **Contractor** for payment; the notarized statement of the beneficiary that the demand is due and payable, that a request for payment has been made of the **Contractor** and that the demand has not been paid by the **Contractor** within the time allowed for such payment by the subcontract; and copies of any correspondence between the beneficiary and the **Contractor** concerning such demand. The **City** shall notify the **Contractor** that a demand has been made. The **Contractor** shall inform the **City** of any defenses to the demand and shall forward to the **City** any documents the **City** requests concerning the demand.

20.3.8 The **City** shall make payment only if, after considering all defenses presented by the **Contractor**, it determines that the payment is due and owing to the beneficiary making the demand.

20.3.9 No beneficiary shall be entitled to interest from the **City**, or to any other costs, including, but not limited to, attorneys' fees, except to the extent required by State Finance Law Section 137.

20.4 Upon the receipt by the **City** of a demand pursuant to this Article 20, the **City** may withhold from any payment otherwise due and owing to the **Contractor** under this **Contract** an amount sufficient to satisfy the demand.

20.4.1 In the event the **City** determines that the demand is valid, the **City** shall notify the **Contractor** of such determination and the amount thereof and direct the **Contractor** to immediately pay such amount to the beneficiary. In the event the **Contractor**, within seven (7) **Days** of receipt of such notification from the **City**, fails to pay the beneficiary, such failure shall constitute an automatic and irrevocable assignment of payment by the **Contractor** to the beneficiary for the amount of the demand determined by the **City** to be valid. The **Contractor**, without further notification or other process, hereby gives its unconditional consent to such assignment of payment to the beneficiary and authorizes the **City**, on its behalf, to take all necessary actions to implement such assignment of payment, including without limitation the execution of any instrument or documentation necessary to effectuate such assignment.

20.4.2In the event that the amount otherwise due and owing to the **Contractor** by the **City** is insufficient to satisfy such demand, the **City** may, at its option, require payment from the **Contractor** of an amount sufficient to cover such demand and exercise any other right to require or recover payment which the **City** may have under **Law** or **Contract**.

20.4.3 In the event the **City** determines that the demand is invalid, any amount withheld pending the **City**'s review of such demand shall be paid to the **Contractor**; provided, however, no lien has been filed. In the event a claim or an action has been filed, the terms and conditions set forth in Article 23 shall apply. In the event a lien has been filed, the parties will be governed by the provisions of the Lien Law of the State of New York.

20.5 The provisions of this Article 20 shall not prevent the **City** and the **Contractor** from resolving disputes in accordance with the **PPB** Rules, where applicable.

20.6 In the event the **City** determines that the beneficiary is entitled to payment pursuant to this Article 20, such determination and any defenses and counterclaims raised by the **Contractor** shall be taken into account in evaluating the **Contractor's** performance.

20.7 Nothing in this Article 20 shall relieve the **Contractor** of the obligation to pay the claims of all persons with valid and lawful claims against the **Contractor** relating to the **Work**.

20.8 The **Contractor** shall not require any performance, payment or other bonds of any **Subcontractor** if this **Contract** does not require such bonds of the **Contractor**.

20.9 The payment guarantee made pursuant to this Article 20 shall be construed in a manner consistent with Section 137 of the State Finance Law and shall afford to persons furnishing labor or materials to the **Contractor** or its **Subcontractors** in the prosecution of the **Work** under this **Contract** all of the rights and remedies afforded to such persons by such section, including but not limited to, the right

to commence an action against the **City** on the payment guarantee provided by this Article 20 within the one-year limitations period set forth in Section 137(4)(b).

ARTICLE 21. RETAINED PERCENTAGE

21.1 If this **Contract** requires one hundred (100%) percent performance and payment security, then as further security for the faithful performance of this **Contract**, the **Commissioner** shall deduct, and retain until the substantial completion of the **Work**, five (5%) percent of the value of **Work** certified for payment in each partial payment voucher.

21.2 If this **Contract** does not require one hundred (100%) percent performance and payment security and if the price for which this **Contract** was awarded does not exceed one million ($1,000,000) dollars, then as further security for the faithful performance of this **Contract**, the **Commissioner** shall deduct, and retain until the substantial completion of the **Work**, five (5%) percent of the value of **Work** certified for payment in each partial payment voucher.

21.3 If this **Contract** does not require one hundred (100%) percent performance and payment security and if the price for which this **Contract** was awarded exceeds one million ($1,000,000) dollars, then as further security for the faithful performance of this **Contract,** the **Commissioner** shall deduct, and retain until the substantial completion of the **Work**, up to ten (10%) percent of the value of **Work** certified for payment in each partial payment voucher. The percentage to be retained is set forth in Schedule A of the General Conditions.

ARTICLE 22. INSURANCE

22.1 Types of Insurance: The **Contractor** shall procure and maintain the following types of insurance if, and as indicated, in Schedule A of the General Conditions (with the minimum limits and special conditions specified in Schedule A). Such insurance shall be maintained from the date the **Contractor** is required to provide Proof of Insurance pursuant to Article 22.3.1 through the date of completion of all required **Work** (including punch list work as certified in writing by the **Resident Engineer**), except for insurance required pursuant to Article 22.1.4, which may terminate upon **Substantial Completion** of the **Contract**. All insurance shall meet the requirements set forth in this Article 22. Wherever this Article requires that insurance coverage be "at least as broad" as a specified form (including all ISO forms), there is no obligation that the form itself be used, provided that the **Contractor** can demonstrate that the alternative form or endorsement contained in its policy provides coverage at least as broad as the specified form.

22.1.1 Commercial General Liability Insurance: The **Contractor** shall provide Commercial General Liability Insurance covering claims for property damage and/or bodily injury, including death, which may arise from any of the operations under this **Contract**. Coverage under this insurance shall be at least as broad as that provided by the latest edition of Insurance Services Office ("ISO") Form CG 0001. Such insurance shall be "occurrence" based rather than "claims-made" and include, without limitation, the following types of coverage: premises operations; products and completed operations; contractual liability (including the tort liability of another assumed in a contract); broad form property damage; independent contractors; explosion, collapse and underground (XCU); construction means and methods; and incidental malpractice. Such insurance shall contain a "per project" aggregate limit, as specified in Schedule A, that applies separately to operations under this **Contract**.

22.1.1(a) Such Commercial General Liability Insurance shall name the **City** as an Additional Insured. Coverage for the City shall specifically include the **City's** officials and employees, be at least as broad as the latest edition of ISO Form CG 20 10 and provide completed operations coverage at least as broad as the latest edition of ISO Form CG 20 37.

22.1.1(b) Such Commercial General Liability Insurance shall name all other entities designated as additional insureds in Schedule A but only for claims arising from the **Contractor's** operations under this **Contract**, with coverage at least as broad as the latest edition of ISO Form CG 20 26.

22.1.1(c) If the **Work** requires a permit from the Department of Buildings pursuant to 1 RCNY Section 101-08, at http://www.nyc.gov/html/dob/downloads/rules/1_RCNY_101-08.pdf, the **Contractor** shall provide Commercial General Liability Insurance with limits of at least those required by 1 RCNY section 101-08. If the **Work** does not require such a permit, the minimum limits shall be those provided for in Schedule A.

22.1.1(d) If any of the **Work** includes repair of a waterborne vessel owned by or to be delivered to the **City**, such Commercial General Liability shall include, or be endorsed to include, Ship Repairer's Legal Liability Coverage to protect against, without limitation, liability arising from navigation of such vessels prior to delivery to and acceptance by the **City**.

22.1.2 Workers' Compensation Insurance, Employers' Liability Insurance, and Disability Benefits Insurance: The **Contractor** shall provide, and shall cause its **Subcontractors** to provide, Workers Compensation Insurance, Employers' Liability Insurance, and Disability Benefits Insurance in accordance with the **Laws** of the State of New York on behalf of all employees providing services under this **Contract** (except for those employees, if any, for which the **Laws** require insurance only pursuant to Article 22.1.3).

22.1.3 United States Longshoremen's and Harbor Workers Act and/or Jones Act Insurance: If specified in Schedule A of the General Conditions or if required by **Law**, the **Contractor** shall provide insurance in accordance with the United States Longshoremen's and Harbor Workers Act and/or the Jones Act, on behalf of all qualifying employees providing services under this **Contract**.

22.1.4 Builders Risk Insurance: If specified in Schedule A of the General Conditions, the **Contractor** shall provide Builders Risk Insurance on a completed value form for the total value of the **Work** through **Substantial Completion** of the **Work** in its entirety. Such insurance shall be provided on an All Risk basis and include coverage, without limitation, for windstorm (including named windstorm), storm surge, flood and earth movement. Unless waived by the **Commissioner**, it shall include coverage for ordinance and law, demolition and increased costs of construction, debris removal, pollutant clean up and removal, and expediting costs. Such insurance shall cover, without limitation, (a) all buildings and/or structures involved in the **Work**, as well as temporary structures at the **Site**, and (b) any property that is intended to become a permanent part of such building or structure, whether such property is on the **Site**, in transit or in temporary storage. Policies shall name the **Contractor** as Named Insured and list the **City** as both an Additional Insured and a Loss Payee as its interest may appear.

22.1.4(a) Policies of such insurance shall specify that, in the event a loss occurs at an occupied facility, occupancy of such facility is permitted without the consent of the issuing insurance company.

22.1.4(b) Such insurance may be provided through an Installation Floater, at the **Contractor's** option, if it otherwise conforms with the requirements of this Article 22.1.4.

22.1.5 Commercial Automobile Liability Insurance: The **Contractor** shall provide Commercial Automobile Liability Insurance for liability arising out of ownership, maintenance or use of any owned (if any), non-owned and hired vehicles to be used in connection with this **Contract**. Coverage shall be at least as broad as the latest edition of ISO Form CA0001. If vehicles are used for transporting hazardous materials, the Automobile Liability Insurance shall be endorsed to provide pollution liability broadened coverage for covered vehicles (endorsement CA 99 48) as well as proof of MCS 90.

22.1.6 Contractors Pollution Liability Insurance: If specified in Schedule A of the General Conditions, the **Contractor** shall maintain, or cause the **Subcontractor** doing such **Work** to maintain, Contractors Pollution Liability Insurance covering bodily injury and property damage. Such insurance shall provide coverage for actual, alleged or threatened emission, discharge, dispersal, seepage, release or escape of pollutants (including asbestos), including any loss, cost or expense incurred as a result of any cleanup of pollutants (including asbestos) or in the investigation, settlement or defense of any claim, action, or proceedings arising from the operations under this **Contract**. Such insurance shall be in the **Contractor's** name and list the **City** as an Additional Insured and any other entity specified in Schedule A. Coverage shall include, without limitation, (a) loss of use of damaged property or of property that has not been physically injured, (b) transportation, and (c) non-owned disposal sites.

22.1.6(a) Coverage for the **City** as Additional Insured shall specifically include the **City's** officials and employees and be at least as broad as provided to the **Contractor** for this **Project**.

22.1.6(b) If such insurance is written on a claims-made policy, such policy shall have a retroactive date on or before the effective date of this **Contract**, and continuous coverage shall be maintained, or an extended discovery period exercised, for a period of not less than three (3) years from the time the **Work** under this **Contract** is completed.

22.1.7 Marine Insurance:

22.1.7(a) Marine Protection and Indemnity Insurance: If specified in Schedule A of the General Conditions or if the **Contractor** engages in marine operations in the execution of any part of the **Work**, the **Contractor** shall maintain, or cause the **Subcontractor** doing such Work to maintain, Marine Protection and Indemnity Insurance with coverage at least as broad as Form SP-23. The insurance shall provide coverage for the **Contractor** or **Subcontractor** (whichever is doing this **Work**) and for the **City** (together with its officials and employees) and any other entity specified in Schedule A as an Additional Insured for bodily injury and property damage arising from marine operations under this **Contract**. Coverage shall include, without limitation, injury or death of crew members (if not fully provided through other insurance), removal of wreck, damage to piers, wharves and other fixed or floating objects and loss of or damage to any other vessel or craft, or to property on such other vessel or craft.

22.1.7(b) Hull and Machinery Insurance: If specified in Schedule A of the General Conditions or if the **Contractor** engages in marine operations in the execution of any part of the **Work**, the **Contractor** shall maintain, or cause the **Subcontractor** doing such **Work** to maintain, Hull and Machinery Insurance with coverage for the **Contractor** or **Subcontractor** (whichever is doing this Work) and for the **City** (together with its officials and employees) as Additional Insured at least as broad as the latest edition of American Institute Tug Form for all tugs used under this **Contract** and Collision Liability at least as broad as the latest edition of American Institute Hull Clauses.

22.1.7(c) Marine Pollution Liability Insurance: If specified in Schedule A of the General Conditions or if the **Contractor** engages in marine operations in the execution of any part of the **Work**, the **Contractor** shall maintain, or cause the **Subcontractor** doing such Work to maintain, Marine Pollution Liability Insurance covering itself (or the Subcontractor doing such Work) as Named Insured and the **City** (together with its officials and employees) and any other entity specified in Schedule A as an Additional Insured. Coverage shall be at least as broad as that provided by the latest edition of Water Quality Insurance Syndicate Form and include, without limitation, liability arising from the discharge or substantial threat of a discharge of oil, or from the release or threatened release of a hazardous substance including injury to, or economic losses resulting from, the destruction of or damage to real property, personal property or natural resources.

22.1.8 The **Contractor** shall provide such other types of insurance, at such minimum limits and with such conditions, as are specified in Schedule A of the General Conditions.

22.2 General Requirements for Insurance Coverage and Policies:

22.2.1 All required insurance policies shall be maintained with companies that may lawfully issue the required policy and have an A.M. Best rating of at least A-/VII or a Standard and Poor's rating of at least A, unless prior written approval is obtained from the **City** Corporation Counsel.

22.2.2 The **Contractor** shall be solely responsible for the payment of all premiums for all required policies and all deductibles and self-insured retentions to which such policies are subject, whether or not the **City** is an insured under the policy.

22.2.3 In his/her sole discretion, the **Commissioner** may, subject to the approval of the **Comptroller** and the **City** Corporation Counsel, accept Letters of Credit and/or custodial accounts in lieu of required insurance.

22.2.4 The **City's** limits of coverage for all types of insurance required pursuant to Schedule A of the General Conditions shall be the greater of (i) the minimum limits set forth in Schedule A or (ii) the limits provided to the **Contractor** as Named Insured under all primary, excess, and umbrella policies of that type of coverage.

22.2.5 The **Contractor** may satisfy its insurance obligations under this Article 22 through primary policies or a combination of primary and excess/umbrella policies, so long as all policies provide the scope of coverage required herein.

22.2.6 Policies of insurance provided pursuant to this Article 22 shall be primary and non-contributing to any insurance or self-insurance maintained by the **City**.

22.3 Proof of Insurance:

22.3.1 For all types of insurance required by Article 22.1 and Schedule A, except for insurance required by Articles 22.1.4 and 22.1.7, the **Contractor** shall file proof of insurance in accordance with this Article 22.3 within ten (10) **Days** of award. For insurance provided pursuant to Articles 22.1.4 and 22.1.7, proof shall be filed by a date specified by the **Commissioner** or ten (10) **Days** prior to the commencement of the portion of the **Work** covered by such policy, whichever is earlier.

22.3.2 For Workers' Compensation Insurance provided pursuant to Article 22.1.2, the **Contractor** shall submit one of the following forms: C-105.2 Certificate of Workers' Compensation Insurance; U-26.3 - State Insurance Fund Certificate of Workers' Compensation Insurance; Request for WC/DB Exemption (Form CE-200); equivalent or successor forms used by the New York State Workers' Compensation Board; or other proof of insurance in a form acceptable to the **Commissioner**. For Disability Benefits Insurance provided pursuant to Article 22.1.2, the Contractor shall submit DB-120.1 - Certificate Of Insurance Coverage Under The NYS Disability Benefits Law, Request for WC/DB Exemption (Form CE-200); equivalent or successor forms used by the New York State Workers' Compensation Board; or other proof of insurance in a form acceptable to the **Commissioner**. ACORD forms are not acceptable.

22.3.3 For policies provided pursuant to all of Article 22.1 other than Article 22.1.2, the **Contractor** shall submit one or more Certificates of Insurance on forms acceptable to the **Commissioner**. All such Certificates of Insurance shall certify (a) the issuance and effectiveness of such policies of insurance, each with the specified minimum limits (b) for insurance secured pursuant to Article 22.1.1 that the **City** and any other entity specified in Schedule A is an Additional Insured with coverage at least as broad as the most recent edition of ISO Forms CG 20 10, CG 20 37, and CG 20 26, as applicable; (c) in the event insurance is required pursuant to Article 22.1.6 and/or Article 22.1.7, that the City is an Additional Insured thereunder; (d) the company code issued to the insurance company by the National Association of Insurance Commissioners (the NAIC number); and (e) the number assigned to the **Contract** by the **City**. All such Certificates of Insurance shall be accompanied by either a duly executed "Certification by Broker" in the form contained in Part III of Schedule A or copies of all policies referenced in such Certificate of Insurance as certified by an authorized representative of the issuing insurance carrier. If any policy is not available at the time of submission, certified binders may be submitted until such time as the policy is available, at which time a certified copy of the policy shall be submitted.

22.3.4 Documentation confirming renewals of insurance shall be submitted to the **Commissioner** prior to the expiration date of coverage of policies required under this **Contract**. Such proofs of insurance shall comply with the requirements of Articles 22.3.2 and 22.3.3.

22.3.5 The **Contractor** shall be obligated to provide the **City** with a copy of any policy of insurance provided pursuant to this Article 22 upon the demand for such policy by the **Commissioner** or the **City** Corporation Counsel.

22.4 Operations of the **Contractor**:

22.4.1 The **Contractor** shall not commence the **Work** unless and until all required certificates have been submitted to and accepted by the **Commissioner**. Acceptance by the **Commissioner** of a certificate does not excuse the **Contractor** from securing insurance

consistent with all provisions of this Article 22 or of any liability arising from its failure to do so.

22.4.2 The **Contractor** shall be responsible for providing continuous insurance coverage in the manner, form, and limits required by this **Contract** and shall be authorized to perform **Work** only during the effective period of all required coverage.

22.4.3 In the event that any of the required insurance policies lapse, are revoked, suspended or otherwise terminated, for whatever cause, the **Contractor** shall immediately stop all **Work**, and shall not recommence **Work** until authorized in writing to do so by the **Commissioner**. Upon quitting the **Site**, except as otherwise directed by the **Commissioner**, the **Contractor** shall leave all plant, materials, equipment, tools, and supplies on the **Site**. **Contract** time shall continue to run during such periods and no extensions of time will be granted. The **Commissioner** may also declare the **Contractor** in default for failure to maintain required insurance.

22.4.4 In the event the **Contractor** receives notice, from an insurance company or other person, that any insurance policy required under this Article 22 shall be cancelled or terminated (or has been cancelled or terminated) for any reason, the **Contractor** shall immediately forward a copy of such notice to both the **Commissioner** and the New York City Comptroller, attn: Office of Contract Administration, Municipal Building, One Centre Street, room 1005, New York, New York 10007. Notwithstanding the foregoing, the **Contractor** shall ensure that there is no interruption in any of the insurance coverage required under this Article 22.

22.4.5 Where notice of loss, damage, occurrence, accident, claim or suit is required under an insurance policy maintained in accordance with this Article 22, the **Contractor** shall notify in writing all insurance carriers that issued potentially responsive policies of any such event relating to any operations under this **Contract** (including notice to Commercial General Liability insurance carriers for events relating to the **Contractor**'s own employees) no later than 20 days after such event. For any policy where the **City** is an Additional Insured, such notice shall expressly specify that "this notice is being given on behalf of the City of New York as Insured as well as the Named Insured." Such notice shall also contain the following information: the number of the insurance policy, the name of the named insured, the date and location of the damage, occurrence, or accident, and the identity of the persons or things injured, damaged or lost. The **Contractor** shall simultaneously send a copy of such notice to the City of New York c/o Insurance Claims Specialist, Affirmative Litigation Division, New York City Law Department, 100 Church Street, New York, New York 10007.

22.4.6 In the event of any loss, accident, claim, action, or other event that does or can give rise to a claim under any insurance policy required under this Article 22, the **Contractor** shall at all times fully cooperate with the **City** with regard to such potential or actual claim.

22.5 **Subcontractor** Insurance: In the event the **Contractor** requires any **Subcontractor** to procure insurance with regard to any operations under this **Contract** and requires such **Subcontractor** to name the **Contractor** as an **Additional Insured** thereunder, the **Contractor** shall ensure that the **Subcontractor** name the **City**, including its officials and employees, as an Additional Insured with coverage at least as broad as the most recent edition of ISO Form CG 20 26.

22.6 Wherever reference is made in Article 7 or this Article 22 to documents to be sent to the **Commissioner** (e.g., notices, filings, or submissions), such documents shall be sent to the address set forth in Schedule A of the General Conditions. In the event no address is set forth in Schedule A, such documents are to be sent to the **Commissioner's** address as provided elsewhere in this **Contract**.

22.7 Apart from damages or losses covered by insurance provided pursuant to Articles 22.1.2, 22.1.3, or 22.1.5, the **Contractor** waives all rights against the **City**, including its officials and employees, for any damages or losses that are covered under any insurance required under this Article 22 (whether or not such insurance is actually procured or claims are paid thereunder) or any other insurance applicable to the operations of the **Contractor** and/or its employees, agents, or **Subcontractors**.

22.8 In the event the **Contractor** utilizes a self-insurance program to satisfy any of the requirements of this Article 22, the **Contractor** shall ensure that any such self-insurance program provides the **City** with all rights that would be provided by traditional insurance under this Article 22, including but not limited to the defense and indemnification obligations that insurers are required to undertake in liability policies.

22.9 Materiality/Non-Waiver: The **Contractor's** failure to secure policies in complete conformity with this Article 22, or to give an insurance company timely notice of any sort required in this **Contract** or to do anything else required by this Article 22 shall constitute a material breach of this **Contract**. Such breach shall not be waived or otherwise excused by any action or inaction by the **City** at any time.

22.10 Pursuant to General Municipal Law Section 108, this **Contract** shall be void and of no effect unless **Contractor** maintains Workers' Compensation Insurance for the term of this **Contract** to the extent required and in compliance with the New York State Workers' Compensation Law.

22.11 Other Remedies: Insurance coverage provided pursuant to this Article 22 or otherwise shall not relieve the **Contractor** of any liability under this **Contract**, nor shall it preclude the **City** from exercising any rights or taking such other actions available to it under any other provisions of this **Contract** or **Law**.

ARTICLE 23. MONEY RETAINED AGAINST CLAIMS

23.1 If any claim shall be made by any person or entity (including **Other Contractors** with the **City** on this **Project**) against the **City** or against the **Contractor** and the **City** for any of the following:

(a) An alleged loss, damage, injury, theft or vandalism of any of the kinds referred to in Articles 7 and 12, plus the reasonable costs of defending the **City**, which in the opinion of the **Comptroller** may not be paid by an insurance company (for any reason whatsoever); or

(b) An infringement of copyrights, patents or use of patented articles, tools, etc., as referred to in Article 57; or

(c) Damage claimed to have been caused directly or indirectly by the failure of the **Contractor** to perform the **Work** in strict accordance with this **Contract,**

the amount of such claim, or so much thereof as the **Comptroller** may deem necessary, may be withheld by the **Comptroller**, as security against such claim, from any money due hereunder. The **Comptroller**, in his/her discretion, may permit the **Contractor** to substitute other satisfactory security in lieu of the monies so withheld.

23.2 If an action on such claim is timely commenced and the liability of the **City**, or the **Contractor**, or both, shall have been established therein by a final judgment of a court of competent jurisdiction, or if such claim shall have been admitted by the **Contractor** to be valid, the **Comptroller**

shall pay such judgment or admitted claim out of the monies retained by the **Comptroller** under the provisions of this Article 23, and return the balance, if any, without interest, to the **Contractor**.

ARTICLE 24. MAINTENANCE AND GUARANTY

24.1 The **Contractor** shall promptly repair, replace, restore or rebuild, as the **Commissioner** may determine, any finished **Work** in which defects of materials or workmanship may appear or to which damage may occur because of such defects, during the one (1) year period subsequent to the date of **Substantial Completion** (or use and occupancy in accordance with Article 16), except where other periods of maintenance and guaranty are provided for in Schedule A.

24.2 As security for the faithful performance of its obligations hereunder, the **Contractor**, upon filing its requisition for payment on **Substantial Completion**, shall deposit with the **Commissioner** a sum equal to one (1%) percent of the price (or the amount fixed in Schedule A of the General Conditions) in cash or certified check upon a state or national bank and trust company or a check of such bank and trust company signed by a duly authorized officer thereof and drawn to the order of the **Comptroller**, or obligations of the **City**, which the **Comptroller** may approve as of equal value with the sum so required.

24.3 In lieu of the above, the **Contractor** may make such security payment to the **City** by authorizing the **Commissioner** in writing to deduct the amount from the **Substantial Completion** payment which shall be deemed the deposit required above.

24.4 If the **Contractor** has faithfully performed all of its obligations hereunder the **Commissioner** shall so certify to the **Comptroller** within five (5) **Days** after the expiration of one (1) year from the date of **Substantial Completion** and acceptance of the **Work** or within thirty (30) **Days** after the expiration of the guarantee period fixed in the **Specifications**. The security payment shall be repaid to the **Contractor** without interest within thirty (30) **Days** after certification by the **Commissioner** to the **Comptroller** that the **Contractor** has faithfully performed all of its obligations hereunder.

24.5 Notice by the **Commissioner** to the **Contractor** to repair, replace, rebuild or restore such defective or damaged **Work** shall be timely, pursuant to this article, if given not later than ten (10) **Days** subsequent to the expiration of the one (1) year period or other periods provided for herein.

24.6 If the **Contractor** shall fail to repair, replace, rebuild or restore such defective or damaged **Work** promptly after receiving such notice, the **Commissioner** shall have the right to have the **Work** done by others in the same manner as provided for in the completion of a defaulted **Contract**, under Article 51.

24.7 If the security payment so deposited is insufficient to cover the cost of such **Work**, the **Contractor** shall be liable to pay such deficiency on demand by the **Commissioner**.

24.8 The **Engineer's** certificate setting forth the fair and reasonable cost of repairing, replacing, rebuilding or restoring any damaged or defective **Work** when performed by one other than the **Contractor**, shall be binding and conclusive upon the **Contractor** as to the amount thereof.

24.9 The **Contractor** shall obtain all manufacturers' warranties and guaranties of all equipment and materials required by this **Contract** in the name of the **City** and shall deliver same to the **Commissioner**. All of the **City's** rights and title and interest in and to said manufacturers' warranties and guaranties may be assigned by the **City** to any subsequent purchasers of such equipment and materials or lessees of the premises into which the equipment and materials have been installed.

CHAPTER VI
CHANGES, EXTRA WORK, AND DOCUMENTATION OF CLAIM

ARTICLE 25. CHANGES

25.1 Changes may be made to this **Contract** only as duly authorized in writing by the **Commissioner** in accordance with the **Law** and this **Contract**. All such changes, modifications, and amendments will become a part of the **Contract**. **Work** so ordered shall be performed by the **Contractor**.

25.2 **Contract** changes will be made only for **Work** necessary to complete the **Work** included in the original scope of the **Contract** and/or for non-material changes to the scope of the **Contract**. Changes are not permitted for any material alteration in the scope of **Work** in the **Contract**.

25.3 The **Contractor** shall be entitled to a price adjustment for **Extra Work** performed pursuant to a written change order. Adjustments to price shall be computed in one or more of the following ways:

25.3.1 By applicable unit prices specified in the **Contract**; and/or

25.3.2 By agreement of a fixed price; and/or

25.3.3 By time and material records; and/or

25.3.4 In any other manner approved by the **CCPO**.

25.4 All payments for change orders are subject to pre-audit by the **Engineering Audit Officer** and may be post-audited by the **Comptroller** and/or the **Agency**.

ARTICLE 26. METHODS OF PAYMENT FOR OVERRUNS AND EXTRA WORK

26.1 Overrun of Unit Price Item: An overrun is any quantity of a unit price item which the **Contractor** is directed to provide which is in excess of one hundred twenty-five (125%) percent of the estimated quantity for that item set forth in the bid schedule.

26.1.1 For any unit price item, the **Contractor** will be paid at the unit price bid for any quantity up to one hundred twenty-five (125%) percent of the estimated quantity for that item set forth in the bid schedule. If during the progress of the **Work**, the actual quantity of any unit price item required to complete the **Work** approaches the estimated quantity for that item, and for any reason it appears that the actual quantity of any unit price item necessary to complete the **Work** will exceed the estimated quantity for that item by twenty-five (25%) percent, the **Contractor** shall immediately notify the **Engineer** of such anticipated overrun. The **Contractor** shall not be compensated for any quantity of a unit price item provided which is in excess of one hundred twenty-five (125%) percent of the estimated quantity for that item set forth in the bid schedule without written authorization from the **Engineer**.

26.1.2 If the actual quantity of any unit price item necessary to complete the **Work** will exceed one hundred twenty five (125%) percent of the estimated quantity for that item set forth in the bid schedule, the **City** reserves the right and the **Contractor** agrees to negotiate a new unit price for such item. In no event shall such negotiated new unit price exceed the unit bid price. If the **City** and **Contractor** cannot agree on a new unit price, then the **City** shall order the **Contractor** and the **Contractor** agrees to provide additional quantities of the

item on the basis of time and material records for the actual and reasonable cost as determined under Article 26.2, but in no event at a unit price exceeding the unit price bid.

26.2 **Extra Work:** For **Extra Work** where payment is by agreement on a fixed price in accordance with Article 25.3.2, the price to be paid for such **Extra Work** shall be based on the fair and reasonable estimated cost of the items set forth below. For **Extra Work** where payment is based on time and material records in accordance with Article 25.3.3, the price to be paid for such **Extra Work** shall be the actual and reasonable cost of the items set forth below, calculated in accordance with the formula specified therein, if any.

26.2.1 Necessary materials (including transportation to the **Site**); plus

26.2.2 Necessary direct labor, including payroll taxes (subject to statutory wage caps) and supplemental benefits; plus

26.2.3 Sales and personal property taxes, if any, required to be paid on materials not incorporated into such **Extra Work**; plus

26.2.4 Reasonable rental value of **Contractor**-owned (or **Subcontractor**-owned, as applicable), necessary plant and equipment other than **Small Tools**, plus fuel/energy costs. Except for fuel costs for pick-up trucks which shall be reimbursed based on a consumption of five (5) gallons per shift, fuel costs shall be reimbursed based on actual costs or, in the absence of auditable documentation, the following fuel consumption formula per operating hour: (.035) x (HP rating) x (Fuel cost/gallon). Reasonable rental value is defined as the lower of either seventy-five percent of the monthly prorated rental rates established in "The AED Green Book, Rental Rates and Specifications for Construction Equipment" published by Equipment Watch (the "Green Book"), or seventy-five percent of the monthly prorated rental rates established in the "Rental Rate Blue Book for Construction Equipment" published by Equipment Watch (the "Blue Book") (the applicable Blue Book rate being for rental only without the addition of any operational costs listed in the Blue Book). The reasonable rental value is deemed to be inclusive of all operating costs except for fuel/energy consumption and equipment operator's wages/costs. For multiple shift utilization, reimbursement shall be calculated as follows: first shift shall be seventy-five (75%) percent of such rental rates; second shift shall be sixty (60%) percent of the first shift rate; and third shift shall be forty (40%) percent of the first shift rate. Equipment on standby shall be reimbursed at one-third (1/3) the prorated monthly rental rate. **Contractor**-owned (or **Subcontractor**-owned, as applicable) equipment includes equipment from rental companies affiliated with or controlled by the **Contractor** (or **Subcontractor**, as applicable), as determined by the **Commissioner**. In establishing cost reimbursement for non-operating **Contractor**-owned (or **Subcontractor**-owned, as applicable) equipment (scaffolding, sheeting systems, road plates, etc.), the **City** may restrict reimbursement to a purchase-salvage/life cycle basis if less than the computed rental costs; plus

26.2.5 Necessary installation and dismantling of such plant and equipment, including transportation to and from the **Site**, if any, provided that, in the case of non-**Contractor**-owned (or non-**Subcontractor**-owned, as applicable) equipment rented from a third party, the cost of installation and dismantling are not allowable if such costs are included in the rental rate; plus

26.2.6 Necessary fees charged by governmental entities; plus

26.2.7 Necessary construction-related service fees charged by non-governmental entities, such as landfill tipping fees; plus

26.2.8 Reasonable rental costs of non-**Contractor**-owned (or non-**Subcontractor**-owned, as applicable) necessary plant and equipment other than **Small Tools**, plus fuel/energy costs. Except for fuel costs for pick-up trucks which shall be reimbursed based on a consumption of five (5) gallons per shift, fuel costs shall be reimbursed based on actual costs or, in the absence of auditable documentation, the following fuel consumption formula per hour of operation: (.035) x (HP rating) x (Fuel cost/gallon). In lieu of renting, the **City** reserves the right to direct the purchase of non-operating equipment (scaffolding, sheeting systems, road plates, etc.), with payment on a purchase-salvage/life cycle basis, if less than the projected rental costs; plus

26.2.9 Workers' Compensation Insurance, and any insurance coverage expressly required by the **City** for the performance of the **Extra Work** which is different than the types of insurance required by Article 22 and Schedule A of the General Conditions. The cost of Workers' Compensation Insurance is subject to applicable payroll limitation caps and shall be based upon the carrier's Manual Rate for such insurance derived from the applicable class Loss Cost ("LC") and carrier's Lost Cost Multiplier ("LCM") approved by the New York State Department of Financial Services, and with the exception of experience rating, rate modifiers as promulgated by the New York Compensation Insurance Rating Board ("NYCIRB"); plus

26.2.10 Additional costs incurred as a result of the **Extra Work** for performance and payment bonds; plus

26.2.11 Twelve percent (12%) percent of the total of items in Articles 26.2.1 through 26.2.5 as compensation for overhead, except that no percentage for overhead will be allowed on **Payroll Taxes** or on the premium portion of overtime pay or on sales and personal property taxes. Overhead shall include without limitation, all costs and expenses in connection with administration, management superintendence, small tools, and insurance required by Schedule A of the General Conditions other than Workers' Compensation Insurance; plus

26.2.12 Ten (10%) percent of the total of items in Articles 26.2.1 through 26.2.5, plus the items in Article 26.2.11, as compensation for profit, except that no percentage for profit will be allowed on **Payroll Taxes** or on the premium portion of overtime pay or on sales and personal property taxes; plus

26.2.13 Five (5%) percent of the total of items in Articles 26.2.6 through 26.2.10 as compensation for overhead and profit.

26.3 Where the **Extra Work** is performed in whole or in part by other than the **Contractor's** own forces pursuant to Article 26.2, the **Contractor** shall be paid, subject to pre-audit by the **Engineering Audit Officer**, the cost of such **Work** computed in accordance with Article 26.2 above, plus an additional allowance of five (5%) percent to cover the **Contractor's** overhead and profit.

26.4 Where a change is ordered, involving both **Extra Work** and omitted or reduced **Contract Work,** the **Contract** price shall be adjusted, subject to pre-audit by the **EAO**, in an amount based on the difference between the cost of such **Extra Work** and of the omitted or reduced **Work**.

26.5 Where the **Contractor** and the **Commissioner** can agree upon a fixed price for **Extra Work** in accordance with Article 25.3.2 or another method of payment for **Extra Work** in accordance with Article

25.3.4, or for **Extra Work** ordered in connection with omitted **Work**, such method, subject to pre-audit by the **EAO**, may, at the option of the **Commissioner**, be substituted for the cost plus a percentage method provided in Article 26.2; provided, however, that if the **Extra Work** is performed by a **Subcontractor**, the **Contractor** shall not be entitled to receive more than an additional allowance of five (5%) percent for overhead and profit over the cost of such **Subcontractor's Work** as computed in accordance with Article 26.2.

ARTICLE 27. RESOLUTION OF DISPUTES

27.1 All disputes between the **City** and the **Contractor** of the kind delineated in this Article 27.1 that arise under, or by virtue of, this **Contract** shall be finally resolved in accordance with the provisions of this Article 27 and the **PPB** Rules. This procedure for resolving all disputes of the kind delineated herein shall be the exclusive means of resolving any such disputes.

27.1.1 This Article 27 shall not apply to disputes concerning matters dealt with in other sections of the **PPB** Rules, or to disputes involving patents, copyrights, trademarks, or trade secrets (as interpreted by the courts of New York State) relating to proprietary rights in computer software.

27.1.2 This Article 27 shall apply only to disputes about the scope of **Work** delineated by the **Contract**, the interpretation of **Contract** documents, the amount to be paid for **Extra Work** or disputed work performed in connection with the **Contract**, the conformity of the **Contractor's Work** to the **Contract**, and the acceptability and quality of the **Contractor's Work**; such disputes arise when the **Engineer**, **Resident Engineer**, **Engineering Audit Officer**, or other designee of the **Commissioner** makes a determination with which the **Contractor** disagrees.

27.2 All determinations required by this Article 27 shall be made in writing clearly stated, with a reasoned explanation for the determination based on the information and evidence presented to the party making the determination. Failure to make such determination within the time required by this Article 27 shall be deemed a non-determination without prejudice that will allow application to the next level.

27.3 During such time as any dispute is being presented, heard, and considered pursuant to this Article 27, the **Contract** terms shall remain in force and the **Contractor** shall continue to perform **Work** as directed by the **ACCO** or the **Engineer**. Failure of the **Contractor** to continue **Work** as directed shall constitute a waiver by the **Contractor** of its claim.

27.4 Presentation of Disputes to **Commissioner**.

Notice of Dispute and Agency Response. The **Contractor** shall present its dispute in writing ("Notice of Dispute") to the **Commissioner** within thirty (30) Days of receiving written notice of the determination or action that is the subject of the dispute. This notice requirement shall not be read to replace any other notice requirements contained in the **Contract**. The Notice of Dispute shall include all the facts, evidence, documents, or other basis upon which the **Contractor** relies in support of its position, as well as a detailed computation demonstrating how any amount of money claimed by the **Contractor** in the dispute was arrived at. Within thirty (30) Days after receipt of the detailed written submission comprising the complete Notice of Dispute, the **Engineer**, **Resident Engineer**, **Engineering Audit Officer**, or other designee of the **Commissioner** shall submit to the **Commissioner** all materials he or she deems pertinent to the dispute. Following initial submissions to the **Commissioner**, either party may demand of the other the production of any document or other material the demanding party believes may be relevant to the dispute. The requested party shall produce all relevant materials that are not otherwise

protected by a legal privilege recognized by the courts of New York State. Any question of relevancy shall be determined by the **Commissioner** whose decision shall be final. Willful failure of the **Contractor** to produce any requested material whose relevancy the **Contractor** has not disputed, or whose relevancy has been affirmatively determined, shall constitute a waiver by the **Contractor** of its claim.

27.4.1 **Commissioner** Inquiry. The **Commissioner** shall examine the material and may, in his or her discretion, convene an informal conference with the **Contractor**, the **ACCO**, and the **Engineer**, **Resident Engineer**, **Engineering Audit Officer**, or other designee of the **Commissioner** to resolve the issue by mutual consent prior to reaching a determination. The **Commissioner** may seek such technical or other expertise as he or she shall deem appropriate, including the use of neutral mediators, and require any such additional material from either or both parties as he or she deems fit. The **Commissioner's** ability to render, and the effect of, a decision hereunder shall not be impaired by any negotiations in connection with the dispute presented, whether or not the **Commissioner** participated therein. The **Commissioner** may or, at the request of any party to the dispute, shall compel the participation of any **Other Contractor** with a contract related to the **Work** of this **Contract**, and that **Contractor** shall be bound by the decision of the **Commissioner**. Any **Other Contractor** thus brought into the dispute resolution proceeding shall have the same rights and obligations under this Article 27 as the **Contractor** initiating the dispute.

27.4.2 **Commissioner** Determination. Within thirty (30) **Days** after the receipt of all materials and information, or such longer time as may be agreed to by the parties, the **Commissioner** shall make his or her determination and shall deliver or send a copy of such determination to the **Contractor**, the **ACCO**, and **Engineer**, **Resident Engineer**, **Engineering Audit Officer**, or other designee of the **Commissioner**, as applicable, together with a statement concerning how the decision may be appealed.

27.4.3 Finality of **Commissioner's** Decision. The **Commissioner's** decision shall be final and binding on all parties, unless presented to the Contract Dispute Resolution Board pursuant to this Article 27. The **City** may not take a petition to the Contract Dispute Resolution Board. However, should the **Contractor** take such a petition, the **City** may seek, and the Contract Dispute Resolution Board may render, a determination less favorable to the **Contractor** and more favorable to the **City** than the decision of the **Commissioner**.

27.5 Presentation of Dispute to the **Comptroller**. Before any dispute may be brought by the **Contractor** to the Contract Dispute Resolution Board, the **Contractor** must first present its claim to the **Comptroller** for his or her review, investigation, and possible adjustment.

27.5.1 Time, Form, and Content of Notice. Within thirty (30) **Days** of its receipt of a decision by the **Commissioner**, the **Contractor** shall submit to the **Comptroller** and to the **Commissioner** a Notice of Claim regarding its dispute with the **Agency**. The Notice of Claim shall consist of (i) a brief written statement of the substance of the dispute, the amount of money, if any, claimed and the reason(s) the **Contractor** contends the dispute was wrongly decided by the **Commissioner**; (ii) a copy of the written decision of the **Commissioner**; and (iii) a copy of all materials submitted by the **Contractor** to the **Agency**, including the Notice of Dispute. The **Contractor** may not present to the **Comptroller** any material not presented to the **Commissioner**, except at the request of the **Comptroller**.

27.5.2 Response. Within thirty (30) **Days** of receipt of the Notice of Claim, the **Agency** shall make available to the **Comptroller** a copy of all material submitted by the **Agency** to the **Commissioner** in connection with the dispute. The **Agency** may not present to the

Comptroller any material not presented to the **Commissioner** except at the request of the **Comptroller**.

27.5.3 **Comptroller** Investigation. The **Comptroller** may investigate the claim in dispute and, in the course of such investigation, may exercise all powers provided in Sections 7-201 and 7-203 of the Administrative Code. In addition, the **Comptroller** may demand of either party, and such party shall provide, whatever additional material the **Comptroller** deems pertinent to the claim, including original business records of the **Contractor**. Willful failure of the **Contractor** to produce within fifteen (15) **Days** any material requested by the **Comptroller** shall constitute a waiver by the **Contractor** of its claim. The **Comptroller** may also schedule an informal conference to be attended by the **Contractor, Agency** representatives, and any other personnel desired by the **Comptroller**.

27.5.4 Opportunity of **Comptroller** to Compromise or Adjust Claim. The **Comptroller** shall have forty-five (45) **Days** from his or her receipt of all materials referred to in Article 27.5.3 to investigate the disputed claim. The period for investigation and compromise may be further extended by agreement between the **Contractor** and the **Comptroller**, to a maximum of ninety (90) **Days** from the **Comptroller's** receipt of all materials. The **Contractor** may not present its petition to the Contract Dispute Resolution Board until the period for investigation and compromise delineated in this Article 27.5.4 has expired. In compromising or adjusting any claim hereunder, the **Comptroller** may not revise or disregard the terms of the **Contract** between the parties.

27.6 Contract Dispute Resolution Board. There shall be a Contract Dispute Resolution Board composed of:

27.6.1 The chief administrative law judge of the Office of Administrative Trials and Hearings (OATH) or his/her designated OATH administrative law judge, who shall act as chairperson, and may adopt operational procedures and issue such orders consistent with this Article 27 as may be necessary in the execution of the Contract Dispute Resolution Board's functions, including, but not limited to, granting extensions of time to present or respond to submissions;

27.6.2 The **CCPO** or his/her designee; any designee shall have the requisite background to consider and resolve the merits of the dispute and shall not have participated personally and substantially in the particular matter that is the subject of the dispute or report to anyone who so participated; and

27.6.3 A person with appropriate expertise who is not an employee of the **City**. This person shall be selected by the presiding administrative law judge from a prequalified panel of individuals, established and administered by OATH with appropriate background to act as decision-makers in a dispute. Such individual may not have a contract or dispute with the **City** or be an officer or employee of any company or organization that does, or regularly represents persons, companies, or organizations having disputes with the **City**.

27.7 Petition to the Contract Dispute Resolution Board. In the event the claim has not been settled or adjusted by the **Comptroller** within the period provided in this Article 27, the **Contractor**, within thirty (30) **Days** thereafter, may petition the Contract Dispute Resolution Board to review the **Commissioner's** determination.

27.7.1 Form and Content of Petition by **Contractor**. The **Contractor** shall present its dispute to the Contract Dispute Resolution Board in the form of a petition, which shall

include (i) a brief written statement of the substance of the dispute, the amount of money, if any, claimed, and the reason(s) the **Contractor** contends the dispute was wrongly decided by the **Commissioner**; (ii) a copy of the written Decision of the **Commissioner,** (iii) copies of all materials submitted by the **Contractor** to the Agency; (iv) a copy of the written decision of the **Comptroller**, if any, and (v) copies of all correspondence with, or written material submitted by the **Contractor**, to the **Comptroller**. The **Contractor** shall concurrently submit four (4) complete sets of the Petition: one set to the **City** Corporation Counsel (Attn: Commercial and Real Estate Litigation Division) and three (3) sets to the Contract Dispute Resolution Board at OATH's offices with proof of service on the **City** Corporation Counsel. In addition, the **Contractor** shall submit a copy of the written statement of the substance of the dispute, cited in (i) above, to both the **Commissioner** and the **Comptroller**.

27.7.2 **Agency** Response. Within thirty (30) **Days** of its receipt of the Petition by the **City** Corporation Counsel, the **Agency** shall respond to the brief written statement of the **Contractor** and make available to the Contract Dispute Resolution Board all material it submitted to the **Commissioner** and **Comptroller**. Three (3) complete copies of the **Agency** response shall be provided to the Contract Dispute Resolution Board and one to the **Contractor**. Extensions of time for submittal of the **Agency** response shall be given as necessary upon a showing of good cause or, upon consent of the parties, for an initial period of up to thirty (30) Days.

27.7.3 Further Proceedings. The Contract Dispute Resolution Board shall permit the **Contractor** to present its case by submission of memoranda, briefs, and oral argument. The Contract Dispute Resolution Board shall also permit the **Agency** to present its case in response to the **Contractor** by submission of memoranda, briefs, and oral argument. If requested by the **City** Corporation Counsel, the **Comptroller** shall provide reasonable assistance in the preparation of the **Agency's** case. Neither the **Contractor** nor the **Agency** may support its case with any documentation or other material that was not considered by the **Comptroller**, unless requested by the Contract Dispute Resolution Board. The Contract Dispute Resolution Board, in its discretion, may seek such technical or other expert advice as it shall deem appropriate and may seek, on its own or upon application of a party, any such additional material from any party as it deems fit. The Contract Dispute Resolution Board, in its discretion, may combine more than one dispute between the parties for concurrent resolution.

27.7.4 Contract Dispute Resolution Board Determination. Within forty-five (45) **Days** of the conclusion of all written submissions and oral arguments, the Contract Dispute Resolution Board shall render a written decision resolving the dispute. In an unusually complex case, the Contract Dispute Resolution Board may render its decision in a longer period, not to exceed ninety (90) **Days**, and shall so advise the parties at the commencement of this period. The Contract Dispute Resolution Board's decision must be consistent with the terms of the **Contract**. Decisions of the Contract Dispute Resolution Board shall only resolve matters before the Contract Dispute Resolution Board and shall not have precedential effect with respect to matters not before the Contract Dispute Resolution Board.

27.7.5 Notification of Contract Dispute Resolution Board Decision. The Contract Dispute Resolution Board shall send a copy of its decision to the **Contractor**, the **ACCO**, the Engineer, the **Comptroller**, the **City** Corporation Counsel, the CCPO, and the **PPB**. A decision in favor of the **Contractor** shall be subject to the prompt payment provisions of the **PPB** Rules. The Required Payment Date shall be thirty (30) Days after the date the parties are formally notified of the Contract Dispute Resolution Board's decision.

27.7.6 Finality of Contract Dispute Resolution Board Decision. The Contract Dispute Resolution Board's decision shall be final and binding on all parties. Any party may seek review of the Contract Dispute Resolution Board's decision solely in the form of a challenge, filed within four (4) months of the date of the Contract Dispute Resolution Board's decision, in a court of competent jurisdiction of the State of New York, County of New York pursuant to Article 78 of the Civil Practice Law and Rules. Such review by the court shall be limited to the question of whether or not the Contract Dispute Resolution Board's decision was made in violation of lawful procedure, was affected by an error of **Law**, or was arbitrary and capricious or an abuse of discretion. No evidence or information shall be introduced or relied upon in such proceeding that was not presented to the Contract Dispute Resolution Board in accordance with this Article 27.

27.8 Any termination, cancellation, or alleged breach of the **Contract** prior to or during the pendency of any proceedings pursuant to this Article 27 shall not affect or impair the ability of the **Commissioner** or Contract Dispute Resolution Board to make a binding and final decision pursuant to this Article 27.

ARTICLE 28. RECORD KEEPING FOR EXTRA OR DISPUTED WORK OR WORK ON A TIME & MATERIALS BASIS

28.1 While the **Contractor** or any of its **Subcontractors** is performing **Work** on a time and material basis or **Extra Work** on a time and material basis ordered by the **Commissioner** under Article 25, or where the **Contractor** believes that it or any of its **Subcontractors** is performing **Extra Work** but a final determination by **Agency** has not been made, or the **Contractor** or any of its **Subcontractors** is performing disputed **Work** (whether on or off the **Site**), or complying with a determination or order under protest in accordance with Articles 11, 27, and 30, in each such case the **Contractor** shall furnish the **Resident Engineer** daily with three (3) copies of written statements signed by the **Contractor's** representative at the **Site** showing:

28.1.1 The name, trade, and number of each worker employed on such **Work** or engaged in complying with such determination or order, the number of hours employed, and the character of the **Work** each is doing; and

28.1.2 The nature and quantity of any materials, plant and equipment furnished or used in connection with the performance of such **Work** or compliance with such determination or order, and from whom purchased or rented.

28.2 A copy of such statement will be countersigned by the **Resident Engineer**, noting thereon any items not agreed to or questioned, and will be returned to the **Contractor** within two (2) **Days** after submission.

28.3 The **Contractor** and its **Subcontractors**, when required by the **Commissioner**, or the **Comptroller**, shall also produce for inspection, at the office of the **Contractor** or **Subcontractor**, any and all of its books, bid documents, financial statements, vouchers, records, daily job diaries and reports, and cancelled checks, and any other documents relating to showing the nature and quantity of the labor, materials, plant and equipment actually used in the performance of such **Work**, or in complying with such determination or order, and the amounts expended therefor, and shall permit the **Commissioner** and the **Comptroller** to make such extracts therefrom, or copies thereof, as they or either of them may desire.

28.4 In connection with the examination provided for herein, the **Commissioner**, upon demand therefor, will produce for inspection by the **Contractor** such records as the **Agency** may have with

respect to such **Extra Work** or disputed **Work** performed under protest pursuant to order of the **Commissioner**, except those records and reports which may have been prepared for the purpose of determining the accuracy and validity of the **Contractor's** claim.

28.5 Failure to comply strictly with these requirements shall constitute a waiver of any claim for extra compensation or damages on account of the performance of such **Work** or compliance with such determination or order.

ARTICLE 29. OMITTED WORK

29.1 If any **Contract Work** in a lump sum **Contract**, or if any part of a lump sum item in a unit price, lump sum, or percentage-bid **Contract** is omitted by the **Commissioner** pursuant to Article 33, the **Contract** price, subject to audit by the EAO, shall be reduced by a pro rata portion of the lump sum bid amount based upon the percent of **Work** omitted subject to Article 29.4. For the purpose of determining the pro rata portion of the lump sum bid amount, the bid breakdown submitted in accordance with Article 41 shall be considered, but shall not be the determining factor.

29.2 If the whole of a lump sum item or units of any other item is so omitted by the **Commissioner** in a unit price, lump sum, or percentage-bid **Contract**, then no payment will be made therefor except as provided in Article 29.4.

29.3 For units that have been ordered but are only partially completed, the unit price shall be reduced by a pro rata portion of the unit price bid based upon the percentage of **Work** omitted subject to Article 29.4.

29.4 In the event the **Contractor**, with respect to any omitted **Work**, has purchased any non-cancelable material and/or equipment that is not capable of use except in the performance of this **Contract** and has been specifically fabricated for the sole purpose of this **Contract**, but not yet incorporated into the **Work**, the **Contractor** shall be paid for such material and/or equipment in accordance with Article 64.2.1(b); provided, however, such payment is contingent upon the **Contractor's** delivery of such material and/or equipment in acceptable condition to a location designated by the **City**.

29.5 The **Contractor** agrees to make no claim for damages or for loss of overhead and profit with regard to any omitted **Work**.

ARTICLE 30. NOTICE AND DOCUMENTATION OF COSTS AND DAMAGES; PRODUCTION OF FINANCIAL RECORDS

30.1 If the **Contractor** shall claim to be sustaining damages by reason of any act or omission of the **City** or its agents, it shall submit to the **Commissioner** within forty-five (45) **Days** from the time such damages are first incurred, and every thirty (30) **Days** thereafter for as long as such damages are incurred, verified statements of the details and the amounts of such damages, together with documentary evidence of such damages. The **Contractor** may submit any of the above statements within such additional time as may be granted by the **Commissioner** in writing upon written request therefor. Failure of the **Commissioner** to respond in writing to a written request for additional time within thirty (30) **Days** shall be deemed a denial of the request. On failure of the **Contractor** to strictly comply with the foregoing provisions, such claims shall be deemed waived and no right to recover on such claims shall exist. Damages that the **Contractor** may claim in any action or dispute resolution procedure arising under or by reason of this **Contract** shall not be different from or in excess of the statements and documentation made pursuant to this Article 30.

30.2 In addition to the foregoing statements, the **Contractor** shall, upon notice from the **Commissioner**, produce for examination at the **Contractor's** office, by the **Engineer**, **Architect** or **Project Manager**, all of its books of account, bills, invoices, payrolls, subcontracts, time books, daily reports, bank deposit books, bank statements, check books, and cancelled checks, showing all of its acts and transactions in connection with or relating to or arising by reason of this **Contract**, and submit itself and persons in its employment, for examination under oath by any person designated by the **Commissioner** or **Comptroller** to investigate claims made or disputes against the **City** under this **Contract**. At such examination, a duly authorized representative of the **Contractor** may be present.

30.3 In addition to the statements required under Article 28 and this Article 30, the **Contractor** and/or its **Subcontractor** shall, within thirty (30) **Days** upon notice from the **Commissioner** or **Comptroller**, produce for examination at the **Contractor's** and/or **Subcontractor's** office, by a representative of either the **Commissioner** or **Comptroller**, all of its books of account, bid documents, financial statements, accountant workpapers, bills, invoices, payrolls, subcontracts, time books, daily reports, bank deposit books, bank statements, check books, and cancelled checks, showing all of its acts and transactions in connection with or relating to or arising by reason of this **Contract**. Further, the **Contractor** and/or its **Subcontractor** shall submit any person in its employment, for examination under oath by any person designated by the **Commissioner** or **Comptroller** to investigate claims made or disputes against the **City** under this **Contract**. At such examination, a duly authorized representative of the **Contractor** may be present.

30.4 Unless the information and examination required under Article 30.3 is provided by the **Contractor** and/or its **Subcontractor** upon thirty (30) **Days'** notice from the **Commissioner** or **Comptroller**, or upon the **Commissioner's** or **Comptroller's** written authorization to extend the time to comply, the **City** shall be released from all claims arising under, relating to or by reason of this **Contract**, except for sums certified by the **Commissioner** to be due under the provisions of this **Contract**. It is further stipulated and agreed that no person has the power to waive any of the foregoing provisions and that in any action or dispute resolution procedure against the **City** to recover any sum in excess of the sums certified by the **Commissioner** to be due under or by reason of this **Contract**, the **Contractor** must allege in its complaint and prove, at trial or during such dispute resolution procedure, compliance with the provisions of this Article 30.

30.5 In addition, after the commencement of any action or dispute resolution procedure by the **Contractor** arising under or by reason of this **Contract**, the **City** shall have the right to require the **Contractor** to produce for examination under oath, up until the trial of the action or hearing before the Contract Dispute Resolution Board, the books and documents described in Article 30.3 and submit itself and all persons in its employ for examination under oath. If this Article 30 is not complied with as required, then the **Contractor** hereby consents to the dismissal of the action or dispute resolution procedure.

CHAPTER VII
POWERS OF THE RESIDENT ENGINEER, THE ENGINEER OR ARCHITECT AND THE COMMISSIONER

ARTICLE 31. THE RESIDENT ENGINEER

31.1 The **Resident Engineer** shall have the power to inspect, supervise, and control the performance of the **Work**, subject to review by the **Commissioner**. The **Resident Engineer** shall not, however, have the power to issue an **Extra Work** order, except as specifically designated in writing by the **Commissioner**.

ARTICLE 32. THE ENGINEER OR ARCHITECT OR PROJECT MANAGER

32.1 The **Engineer** or **Architect** or **Project Manager**, in addition to those matters elsewhere herein delegated to the **Engineer** and expressly made subject to his/her determination, direction or approval, shall have the power, subject to review by the **Commissioner**:

32.1.1 To determine the amount, quality, and location of the **Work** to be paid for hereunder; and

32.1.2 To determine all questions in relation to the **Work**, to interpret the **Contract Drawings**, **Specifications**, and **Addenda**, and to resolve all patent inconsistencies or ambiguities therein; and

32.1.3 To determine how the **Work** of this **Contract** shall be coordinated with **Work** of **Other Contractors** engaged simultaneously on this **Project**, including the power to suspend any part of the **Work**, but not the whole thereof; and

32.1.4 To make minor changes in the **Work** as he/she deems necessary, provided such changes do not result in a net change in the cost to the **City** or to the **Contractor** of the **Work** to be done under the **Contract**; and

32.1.5 To amplify the **Contract Drawings**, add explanatory information and furnish additional **Specifications** and drawings, consistent with this **Contract**.

32.2 The foregoing enumeration shall not imply any limitation upon the power of the **Engineer** or **Architect** or **Project Manager**, for it is the intent of this **Contract** that all of the **Work** shall generally be subject to his/her determination, direction, and approval, except where the determination, direction or approval of someone other than the **Engineer** or **Architect** or **Project Manager** is expressly called for herein.

32.3 The **Engineer** or **Architect** or **Project Manager** shall not, however, have the power to issue an **Extra Work** order, except as specifically designated in writing by the **Commissioner**.

ARTICLE 33. THE COMMISSIONER

33.1 The **Commissioner**, in addition to those matters elsewhere herein expressly made subject to his/her determination, direction or approval, shall have the power:

33.1.1 To review and make determinations on any and all questions in relation to this **Contract**
and its performance; and

33.1.2 To modify or change this **Contract** so as to require the performance of **Extra Work** (subject, however, to the limitations specified in Article 25) or the omission of **Contract Work**; and

33.1.3 To suspend the whole or any part of the **Work** whenever in his/her judgment such suspension is required:

33.1.3(a) In the interest of the **City** generally; or

33.1.3(b) To coordinate the **Work** of the various contractors engaged on this **Project** pursuant to the provisions of Article 12; or

33.1.3(c) To expedite the completion of the entire **Project** even though the completion of this particular **Contract** may thereby be delayed.

ARTICLE 34. NO ESTOPPEL

34.1 Neither the **City** nor any **Agency**, official, agent or employee thereof, shall be bound, precluded or estopped by any determination, decision, approval, order, letter, payment or certificate made or given under or in connection with this **Contract** by the **City**, the **Commissioner**, the **Engineer**, the **Resident Engineer**, or any other official, agent or employee of the **City**, either before or after the final completion and acceptance of the **Work** and payment therefor:

34.1.1 From showing the true and correct classification, amount, quality or character of the **Work** actually done; or that any such determination, decision, order, letter, payment or certificate was untrue, incorrect or improperly made in any particular, or that the **Work**, or any part thereof, does not in fact conform to the requirements of this **Contract**; and

34.1.2 From demanding and recovering from the **Contractor** any overpayment made to it, or such damages as the **City** may sustain by reason of the **Contractor's** failure to perform each and every part of its **Contract**.

CHAPTER VIII
LABOR PROVISIONS

ARTICLE 35. EMPLOYEES

35.1 The **Contractor** and its **Subcontractors** shall not employ on the **Work**:

35.1.1 Anyone who is not competent, faithful and skilled in the **Work** for which he/she shall be employed; and whenever the **Commissioner** shall inform the **Contractor**, in writing, that any employee is, in his/her opinion, incompetent, unfaithful or disobedient, that employee shall be discharged from the **Work** forthwith, and shall not again be employed upon it; or

35.1.2 Any labor, materials or means whose employment, or utilization during the course of this **Contract**, may tend to or in any way cause or result in strikes, work stoppages, delays, suspension of **Work** or similar troubles by workers employed by the **Contractor** or its **Subcontractors**, or by any of the trades working in or about the buildings and premises where **Work** is being performed under this **Contract**, or by **Other Contractors** or their **Subcontractors** pursuant to other contracts, or on any other building or premises owned or operated by the **City**, its **Agencies**, departments, boards or authorities. Any violation by the **Contractor** of this requirement may, upon certification of the **Commissioner**, be considered as proper and sufficient cause for declaring the **Contractor** to be in default, and for the **City** to take action against it as set forth in Chapter X of this **Contract**, or such other article of this **Contract** as the **Commissioner** may deem proper; or

35.1.3 In accordance with Section 220.3-e of the Labor Law of the State of New York (hereinafter "Labor Law"), the **Contractor** and its **Subcontractors** shall not employ on the **Work** any apprentice, unless he/she is a registered individual, under a bona fide program

registered with the New York State Department of Labor. The allowable ratio of apprentices to journey-level workers in any craft classification shall not be greater than the ratio permitted to the **Contractor** as to its work force on any job under the registered program. Any employee listed on a payroll at an apprentice wage rate, who is not registered as above, shall be paid the wage rate determined by the **Comptroller** of the **City** for the classification of **Work** actually performed. The **Contractor** or **Subcontractor** will be required to furnish written evidence of the registration of its program and apprentices as well as all the appropriate ratios and wage rates, for the area of the construction prior to using any apprentices on the **Contract Work**.

35.2 If the total cost of the **Work** under this **Contract** is at least two hundred fifty thousand ($250,000) dollars, all laborers, workers, and mechanics employed in the performance of the **Contract** on the public work site, either by the **Contractor**, **Subcontractor** or other person doing or contracting to do the whole or a part of the **Work** contemplated by the **Contract**, shall be certified prior to performing any **Work** as having successfully completed a course in construction safety and health approved by the United States Department of Labor's Occupational Safety and Health Administration that is at least ten (10) hours in duration.

35.3 In accordance with Local Law Nos. 30-2012 and 33-2012, codified at sections 6-132 and 12-113 of the Administrative Code, respectively,

35.3.1 The **Contractor** shall not take an adverse personnel action with respect to an officer or employee in retaliation for such officer or employee making a report of information concerning conduct which such officer or employee knows or reasonably believes to involve corruption, criminal activity, conflict of interest, gross mismanagement or abuse of authority by any officer or employee relating to this **Contract** to (a) the Commissioner of the Department of Investigation, (b) a member of the New York City Council, the Public Advocate, or the **Comptroller**, or (c) the **CCPO**, **ACCO**, **Agency** head, or **Commissioner**.

35.3.2 If any of the **Contractor**'s officers or employees believes that he or she has been the subject of an adverse personnel action in violation of Article 35.3.1, he or she shall be entitled to bring a cause of action against the **Contractor** to recover all relief necessary to make him or her whole. Such relief may include but is not limited to: (a) an injunction to restrain continued retaliation, (b) reinstatement to the position such employee would have had but for the retaliation or to an equivalent position, (c) reinstatement of full fringe benefits and seniority rights, (d) payment of two times back pay, plus interest, and (e) compensation for any special damages sustained as a result of the retaliation, including litigation costs and reasonable attorney's fees.

35.3.3 The **Contractor** shall post a notice provided by the **City** in a prominent and accessible place on any site where work pursuant to the **Contract** is performed that contains information about:

35.3.3(a) how its employees can report to the New York City Department of Investigation allegations of fraud, false claims, criminality or corruption arising out of or in connection with the **Contract**; and

35.3.3(b) the rights and remedies afforded to its employees under Administrative Code sections 7-805 (the New York City False Claims Act) and 12-113 (the Whistleblower Protection Expansion Act) for lawful acts taken in connection with the reporting of allegations of fraud, false claims, criminality or corruption in connection with the **Contract**.

35.3.4 For the purposes of this Article 35.3, "adverse personnel action" includes dismissal, demotion, suspension, disciplinary action, negative performance evaluation, any action resulting in loss of staff, office space, equipment or other benefit, failure to appoint, failure to promote, or any transfer or assignment or failure to transfer or assign against the wishes of the affected officer or employee.

35.3.5 This Article 35.3 is applicable to all of the **Contractor**'s **Subcontractors** having subcontracts with a value in excess of $100,000; accordingly, the **Contractor** shall include this rider in all subcontracts with a value a value in excess of $100,000.

35.4 Article 35.3 is not applicable to this **Contract** if it is valued at $100,000 or less. Articles 35.3.1, 35.3.2, 35.3.4, and 35.3.5 are not applicable to this **Contract** if it was solicited pursuant to a finding of an emergency.

ARTICLE 36. NO DISCRIMINATION

36.1 The **Contractor** specifically agrees, as required by Labor Law Section 220-e, as amended, that:

36.1.1 In the hiring of employees for the performance of **Work** under this **Contract** or any subcontract hereunder, neither the **Contractor**, **Subcontractor**, nor any person acting on behalf of such **Contractor** or **Subcontractor**, shall by reason of race, creed, color or national origin discriminate against any citizen of the State of New York who is qualified and available to perform the **Work** to which the employment relates;

36.1.2 Neither the **Contractor**, **Subcontractor**, nor any person on its behalf shall, in any manner, discriminate against or intimidate any employee hired for the performance of **Work** under this **Contract** on account of race, creed, color or national origin;

36.1.3 There may be deducted from the amount payable to the **Contractor** by the **City** under this **Contract** a penalty of fifty ($50.00) dollars for each person for each **Day** during which such person was discriminated against or intimidated in violation of the provisions of this **Contract**; and

36.1.4 This **Contract** may be cancelled or terminated by the **City** and all moneys due or to become due hereunder may be forfeited, for a second or any subsequent violation of the terms or conditions of this Article 36.

36.1.5 This Article 36 covers all construction, alteration and repair of any public building or public work occurring in the State of New York and the manufacture, sale, and distribution of materials, equipment, and supplies to the extent that such operations are performed within the State of New York pursuant to this **Contract**.

36.2 The **Contractor** specifically agrees, as required by Section 6-108 of the Administrative Code, as amended, that:

36.2.1 It shall be unlawful for any person engaged in the construction, alteration or repair of buildings or engaged in the construction or repair of streets or highways pursuant to a **Contract** with the **City** or engaged in the manufacture, sale or distribution of materials, equipment or supplies pursuant to a **Contract** with the **City** to refuse to employ or to refuse to continue in any employment any person on account of the race, color or creed of such person.

36.2.2 It shall be unlawful for any person or any servant, agent or employee of any person, described in Article 36.1.2, to ask, indicate or transmit, orally or in writing, directly or indirectly, the race, color or creed or religious affiliation of any person employed or seeking employment from such person, firm or corporation.

36.2.3 Breach of the foregoing provisions shall be deemed a violation of a material provision of this **Contract**.

36.2.4 Any person, or the employee, manager or owner of or officer of such firm or corporation who shall violate any of the provisions of this Article 36.2 shall, upon conviction thereof, be punished by a fine of not more than one hundred ($100.00) dollars or by imprisonment for not more than thirty (30) **Days**, or both.

36.3 This **Contract** is subject to the requirements of Executive Order No. 50 (1980) ("E.O. 50"), as revised, and the rules and regulations promulgated thereunder. No contract will be awarded unless and until these requirements have been complied with in their entirety. By signing this **Contract**, the **Contractor** agrees that it:

36.3.1 Will not engage in any unlawful discrimination against any employee or applicant for employment because of race, creed, color, national origin, sex, age, disability, marital status or sexual orientation with respect to all employment decisions including, but not limited to, recruitment, hiring, upgrading, demotion, downgrading, transfer, training, rates of pay or other forms of compensation, layoff, termination, and all other terms and conditions of employment; and

36.3.2 Will not engage in any unlawful discrimination in the selection of **Subcontractors** on the basis of the owner's race, color, creed, national origin, sex, age, disability, marital status or sexual orientation; and

36.3.3 Will state in all solicitations or advertisements for employees placed by or on behalf of the **Contractor** that all qualified applicants will receive consideration for employment without unlawful discrimination based on race, creed, color, national origin, sex, age, citizens status, disability, marital status, sexual orientation, or that it is an equal employment opportunity employer; and

36.3.4 Will send to each labor organization or representative of workers with which it has a collective bargaining agreement or other contract or memorandum of understanding, written notification of its equal employment opportunity commitments under E.O. 50 and the rules and regulations promulgated thereunder; and

36.3.5 Will furnish, before the award of the **Contract**, all information and reports, including an employment report, that are required by E.O. 50, the rules and regulations promulgated thereunder, and orders of the **City** Department of Business Services, Division of Labor Services (**DLS**) and will permit access to its books, records, and accounts by the **DLS** for the purposes of investigation to ascertain compliance with such rules, regulations, and orders.

36.4 The **Contractor** understands that in the event of its noncompliance with the nondiscrimination clauses of this **Contract** or with any of such rules, regulations, or orders, such noncompliance shall constitute a material breach of this **Contract** and noncompliance with E.O. 50 and the rules and regulations promulgated thereunder. After a hearing held pursuant to the rules of the **DLS**, the Director of the **DLS** may direct the **Commissioner** to impose any or all of the following sanctions:

36.4.1 Disapproval of the **Contractor**; and/or

36.4.2 Suspension or termination of the **Contract**; and/or

36.4.3 Declaring the **Contractor** in default; and/or

36.4.4 In lieu of any of the foregoing sanctions, the Director of the **DLS** may impose an employment program.

In addition to any actions taken under this **Contract**, failure to comply with E.O. 50 and the rules and regulations promulgated thereunder, in one or more instances, may result in a **City Agency** declaring the **Contractor** to be non-responsible in future procurements. The **Contractor** further agrees that it will refrain from entering into any **Contract** or **Contract** modification subject to E.O. 50 and the rules and regulations promulgated thereunder with a **Subcontractor** who is not in compliance with the requirements of E.O. 50 and the rules and regulations promulgated thereunder.

36.5 The **Contractor** specifically agrees, as required by Section 6-123 of the Administrative Code, that:

36.5.1 The **Contractor** will not engage in any unlawful discriminatory practice in violation of Title 8 of the Administrative Code; and

36.5.2 Any failure to comply with this Article 36.5 may subject the **Contractor** to the remedies set forth in Section 6-123 of the Administrative Code, including, where appropriate, sanctions such as withholding of payment, imposition of an employment program, finding the **Contractor** to be in default, cancellation of the **Contract**, or any other sanction or remedy provided by **Law** or **Contract**.

ARTICLE 37. LABOR LAW REQUIREMENTS

37.1 The **Contractor** shall strictly comply with all applicable provisions of the Labor Law, as amended. Such compliance is a material term of this **Contract**.

37.2 The **Contractor** specifically agrees, as required by Labor Law Sections 220 and 220-d, as amended, that:

37.2.1 Hours of **Work**: No laborer, worker, or mechanic in the employ of the **Contractor**, **Subcontractor** or other person doing or contracting to do the whole or a part of the **Work** contemplated by this **Contract** shall be permitted or required to work more than eight (8) hours in any one (1) **Day**, or more than five (5) **Days** in any one (1) week, except as provided in the Labor Law and in cases of extraordinary emergency including fire, flood, or danger to life or property, or in the case of national emergency when so proclaimed by the President of the United States of America.

37.2.2 In situations in which there are not sufficient laborers, workers, and mechanics who may be employed to carry on expeditiously the **Work** contemplated by this **Contract** as a result of such restrictions upon the number of hours and **Days** of labor, and the immediate commencement or prosecution or completion without undue delay of the **Work** is necessary for the preservation of the **Site** and/or for the protection of the life and limb of the persons using the same, such laborers, workers, and mechanics shall be permitted or required to

work more than eight (8) hours in any one (1) **Day**; or five (5) **Days** in any one (1) week; provided, however, that upon application of any **Contractor**, the **Commissioner** shall have first certified to the Commissioner of Labor of the State of New York (hereinafter "Commissioner of Labor") that such public **Work** is of an important nature and that a delay in carrying it to completion would result in serious disadvantage to the public; and provided, further, that such Commissioner of Labor shall have determined that such an emergency does in fact exist as provided in Labor Law Section 220.2.

37.2.3 Failure of the **Commissioner** to make such a certification to the Commissioner of Labor shall not entitle the **Contractor** to damages for delay or for any cause whatsoever.

37.2.4 Prevailing Rate of Wages: The wages to be paid for a legal day's **Work** to laborers, workers, or mechanics employed upon the **Work** contemplated by this **Contract** or upon any materials to be used thereon shall not be less than the "prevailing rate of wage" as defined in Labor Law Section 220, and as fixed by the **Comptroller** in the attached Schedule of Wage Rates and in updated schedules thereof. The prevailing wage rates and supplemental benefits to be paid are those in effect at the time the **Work** is being performed.

37.2.5 Requests for interpretation or correction in the Information for Bidders includes all requests for clarification of the classification of trades to be employed in the performance of the **Work** under this **Contract**. In the event that a trade not listed in the **Contract** is in fact employed during the performance of this **Contract**, the **Contractor** shall be required to obtain from the **Agency** the prevailing wage rates and supplementary benefits for the trades used and to complete the performance of this **Contract** at the price at which the **Contract** was awarded.

37.2.6 Minimum Wages: Except for employees whose wage is required to be fixed pursuant to Labor Law Section 220, all persons employed by the **Contractor** and any **Subcontractor** in the manufacture or furnishing of the supplies, materials, or equipment, or the furnishing of work, labor, or services, used in the performance of this **Contract**, shall be paid, without subsequent deduction or rebate unless expressly authorized by **Law**, not less than the sum mandated by **Law**.

37.3 Working Conditions: No part of the **Work**, labor or services shall be performed or rendered by the **Contractor** in any plants, factories, buildings or surroundings or under working conditions which are unsanitary or hazardous or dangerous to the health and safety of employees engaged in the performance of this **Contract**. Compliance with the safety, sanitary, and factory inspection **Laws** of the state in which the **Work** is to be performed shall be prima facie evidence of compliance with this Article 37.3.

37.4 Prevailing Wage Enforcement: The **Contractor** agrees to pay for all costs incurred by the **City** in enforcing prevailing wage requirements, including the cost of any investigation conducted by or on behalf of the **Agency** or the **Comptroller,** where the **City** discovers a failure to comply with any of the requirements of this Article 37 by the **Contractor** or its **Subcontractor(s)**. The **Contractor** also agrees that, should it fail or refuse to pay for any such investigation, the **Agency** is hereby authorized to deduct from a **Contractor's** account an amount equal to the cost of such investigation.

37.4.1 The Labor Law Section 220 and Section 220-d, as amended, provide that this **Contract** shall be forfeited and no sum paid for any **Work** done hereunder on a second conviction for willfully paying less than:

37.4.1(a) The stipulated prevailing wage scale as provided in Labor Law section 220, as amended, or

37.4.1(b) The stipulated minimum hourly wage scale as provided in Labor Law section 220-d, as amended.

37.4.2 For any breach or violation of either working conditions (Article 37.3) or minimum wages (Article 37.2.6) provisions, the party responsible therefor shall be liable to the **City** for liquidated damages, which may be withheld from any amounts due on any contracts with the **City** of such party responsible, or may be recovered in actions brought by the **City** Corporation Counsel in the name of the **City**, in addition to damages for any other breach of this **Contract**, for a sum equal to the amount of any underpayment of wages due to any employee engaged in the performance of this **Contract**. In addition, the **Commissioner** shall have the right to cancel contracts and enter into other contracts for the completion of the original contract, with or without public letting, and the original **Contractor** shall be liable for any additional cost. All sums withheld or recovered as deductions, rebates, refunds, or underpayment of wages hereunder, shall be held in a special deposit account and shall be paid without interest, on order of the **Comptroller**, directly to the employees who have been paid less than minimum rates of pay as set forth herein and on whose account such sums were withheld or recovered, provided that no claims by employees for such payments shall be entertained unless made within two (2) years from the date of actual notice to the **Contractor** of the withholding or recovery of such sums by the **City**.

37.4.3 A determination by the **Comptroller** that a **Contractor** and/or its **Subcontractor** willfully violated Labor Law Section 220 will be forwarded to the **City's** five District Attorneys for review.

37.4.4 The **Contractor's** or **Subcontractor's** noncompliance with this Article 37.4 and Labor Law Section 220 may result in an unsatisfactory performance evaluation and the **Comptroller** may also find and determine that the **Contractor** or **Subcontractor** willfully violated the New York Labor **Law**.

37.4.4(a) An unsatisfactory performance evaluation for noncompliance with this Article 37.4 may result in a determination that the **Contractor** is a non-responsible bidder on subsequent procurements with the **City** and thus a rejection of a future award of a contract with the **City**, as well as any other sanctions provided for by **Law**.

37.4.4(b) Labor Law Section 220-b, as amended, provides that when two (2) final determinations have been rendered against a **Contractor** or **Subcontractor** within any consecutive six (6) year period determining that such **Contractor** or **Subcontractor** has willfully failed to pay the prevailing rate of wages or to provide supplements in accordance with the Labor Law and this Article 37.4, whether such failures were concurrent or consecutive and whether or not such final determinations concerning separate public works projects are rendered simultaneously, such **Contractor** or **Subcontractor** shall be ineligible to submit a bid on or be awarded any public works contract with the **City** for a period of five (5) years from the second final determination. If the final determination involves the falsification of payroll records or the kickback of wages or supplements, the **Contractor** or **Subcontractor** shall be ineligible to submit a bid on or be awarded any public works contract with the **City** for a period of five (5) years from the first final determination.

37.4.4(c) Labor Law Section 220, as amended, provides that the **Contractor** or **Subcontractor** found to have violated this Article 37.4 may be directed to make payment of wages or supplements including interest found to be due, and the **Contractor** or **Subcontractor** may be directed to make payment of a further sum as

a civil penalty in an amount not exceeding twenty-five (25%) percent of the total amount found to be due.

37.5 The **Contractor** and its **Subcontractors** shall within ten (10) **Days** after mailing of a Notice of Award or written order, post in prominent and conspicuous places in each and every plant, factory, building, and structure where employees of the **Contractor** and its **Subcontractors** engaged in the performance of this **Contract** are employed, notices furnished by the **City**, in relation to prevailing wages and supplements, minimum wages, and other stipulations contained in Sections 220 and 220-h of the Labor Law, and the **Contractor** and its **Subcontractors** shall continue to keep such notices posted in such prominent and conspicuous places until **Final Acceptance** of the supplies, materials, equipment, or **Work**, labor, or services required to be furnished or rendered under this **Contract**.

37.6 The **Contractor** shall strictly comply with all of the provisions of Articles 37.6.1 through 37.6.5, and provide for all workers, laborers or mechanics in its employ, the following:

37.6.1 Notices Posted At **Site**: Post, in a location designated by the **City**, schedules of prevailing wages and supplements for this **Project**, a copy of all re-determinations of such schedules for the **Project**, the Workers' Compensation **Law** Section 51 notice, all other notices required by **Law** to be posted at the **Site**, the **City** notice that this **Project** is a public works project on which each worker is entitled to receive the prevailing wages and supplements for the occupation at which he or she is working, and all other notices which the **City** directs the **Contractor** to post. The **Contractor** shall provide a surface for such notices which is satisfactory to the **City**. The **Contractor** shall maintain and keep current such notices in a legible manner and shall replace any notice or schedule which is damaged, defaced, illegible or removed for any reason. The **Contractor** shall post such notices before commencing any **Work** on the **Site** and shall maintain such notices until all **Work** on the **Site** is complete; and

37.6.2 Daily **Site** Sign-in Sheets: Maintain daily **Site** sign-in sheets, and require that **Subcontractors** maintain daily **Site** sign-in sheets for its employees, which include blank spaces for an employee's name to be both printed and signed, job title, date started and Social Security number, the time the employee began work and the time the employee left work, until **Final Acceptance** of the supplies, materials, equipment, or **Work**, labor, or services to be furnished or rendered under this **Contract** unless exception is granted by the **Comptroller** upon application by the **Agency**. In the alternative, subject to the approval of the **CCPO**, the **Contractor** and **Subcontractor** may maintain an electronic or biometric sign-in system, which provides the information required by this Article 37.6.2; and

37.6.3 Individual Employee Information Notices: Distribute a notice to each worker, laborer or mechanic employed under this **Contract**, in a form provided by the **Agency**, that this **Project** is a public works project on which each worker, laborer or mechanic is entitled to receive the prevailing rate of wages and supplements for the occupation at which he or she is working. If the total cost of the **Work** under this **Contract** is at least two hundred fifty thousand ($250,000) dollars, such notice shall also include a statement that each worker, laborer or mechanic must be certified prior to performing any **Work** as having successfully completed a course in construction safety and health approved by the United States Department of Labor's Occupational Safety and Health Administration that is at least ten (10) hours in duration. Such notice shall be distributed to each worker before he or she starts performing any **Work** of this **Contract** and with the first paycheck after July first of each year. "Worker, laborer or mechanic" includes employees of the **Contractor** and all **Subcontractors** and all employees of suppliers entering the **Site**. At the time of distribution, the **Contractor** shall have each worker, laborer or mechanic sign a statement, in a form provided by the **Agency**, certifying that the worker has received the notice required by this

Article 37.6.3, which signed statement shall be maintained with the payroll records required by this **Contract**; and

37.6.3(a) The **Contractor** and each **Subcontractor** shall notify each worker, laborer or mechanic employed under this **Contract** in writing of the prevailing rate of wages for their particular job classification. Such notification shall be given to every worker, laborer, and mechanic on their first pay stub and with every pay stub thereafter; and

37.6.4 **Site** Laminated Identification Badges: The **Contractor** shall provide laminated identification badges which include a photograph of the worker's, laborer's or mechanic's face and indicate the worker's, laborer's or mechanic's name, trade, employer's name, and employment starting date (month/day/year). Further, the **Contractor** shall require as a condition of employment on the **Site**, that each and every worker, laborer or mechanic wear the laminated identification badge at all times and that it may be seen by any representative of the **City**. The **Commissioner** may grant a written waiver from the requirement that the laminated identification badge include a photograph if the **Contractor** demonstrates that the identity of an individual wearing a laminated identification badge can be easily verified by another method; and

37.6.5 Language Other Than English Used On **Site**: Provide the **ACCO** notice when three (3) or more employees (worker and/or laborer and/or mechanic) on the **Site**, at any time, speak a language other than English. The **ACCO** will then provide the **Contractor** the notices described in Article 37.6.1 in that language or languages as may be required. The **Contractor** is responsible for all distributions under this Article 37; and

37.6.6 Provision of Records: The **Contractor** and **Subcontractor(s)** shall produce within five (5) **Days** on the **Site** of the **Work** and upon a written order of the **Engineer**, the **Commissioner**, the **ACCO**, the **Agency EAO**, or the **Comptroller,** such records as are required to be kept by this Article 37.6; and

37.6.7 The **Contractor** and **Subcontractor(s)** shall pay employees by check or direct deposit. If this **Contract** is for an amount greater than one million ($1,000,000) dollars, checks issued by the **Contractor** to covered employees shall be generated by a payroll service or automated payroll system (an in-house system may be used if approved by the **Agency**). For any subcontract for an amount greater than seven hundred fifty thousand ($750,000) dollars, checks issued by a **Subcontractor** to covered employees shall be generated by a payroll service or automated payroll system (an in-house system may be used if approved by the **Agency**); and

37.6.8 The failure of the **Contractor** or **Subcontractor(s)** to comply with the provisions of Articles 37.6.1 through 37.6.7 may result in the **Commissioner** declaring the **Contractor** in default and/or the withholding of payments otherwise due under the **Contract**.

37.7 The **Contractor** and its **Subcontractors** shall keep such employment and payroll records as are required by Section 220 of the Labor Law. The failure of the **Contractor** or **Subcontractor(s)** to comply with the provisions of this Article 37.7 may result in the **Commissioner** declaring the **Contractor** in default and/or the withholding of payments otherwise due under the **Contract.**

37.8 At the time the **Contractor** makes application for each partial payment and for final payment, the **Contractor** shall submit to the **Commissioner** a written payroll certification, in the form provided by this **Contract**, of compliance with the prevailing wage, minimum wage, and other provisions and stipulations required by Labor Law Section 220 and of compliance with the training requirements of

Labor Law Section 220-h set forth in Article 35.2. This certification of compliance shall be a condition precedent to payment and no payment shall be made to the **Contractor** unless and until each such certification shall have been submitted to and received by the **Commissioner**.

37.9 This **Contract** is executed by the **Contractor** with the express warranty and representation that the **Contractor** is not disqualified under the provisions of Section 220 of the Labor Law from the award of the **Contract**.

37.10 Any breach or violation of any of the foregoing shall be deemed a breach or violation of a material provision of this **Contract**, and grounds for cancellation thereof by the **City**.

ARTICLE 38. PAYROLL REPORTS

38.1 The **Contractor** and its **Subcontractor(s)** shall maintain on the **Site** during the performance of the **Work** the original payrolls or transcripts thereof which the **Contractor** and its **Subcontractor(s)** are required to maintain and shall submit such original payrolls or transcripts, subscribed and affirmed by it as true, within thirty (30) **Days** after issuance of its first payroll, and every thirty (30) **Days** thereafter, pursuant to Labor Law Section 220(3-a)(a)(iii). The **Contractor** and **Subcontractor(s)** shall submit such original payrolls or transcripts along with each and every payment requisition. If payment requisitions are not submitted at least once a month, the **Contractor** and its **Subcontractor(s)** shall submit original payrolls and transcripts both along with its payment requisitions and independently of its payment requisitions.

38.2 The **Contractor** shall maintain payrolls or transcripts thereof for six (6) years from the date of completion of the **Work** on this **Contract**. If such payrolls and transcripts are maintained outside of New York City after the completion of the **Work** and their production is required pursuant to this Article 38, the **Contractor** shall produce such records in New York City upon request by the City.

38.3 The **Contractor** and **Subcontractor(s)** shall comply with any written order, direction, or request made by the **Engineer**, the **Commissioner**, the **ACCO**, the **Agency EAO**, the **Agency Labor Law Investigator(s)**, or the **Comptroller**, to provide to the requesting party any of the following information and/or records within five (5) **Days** of such written order, direction, or request:

38.3.1 Such original payrolls or transcripts thereof subscribed and affirmed by it as true and the statements signed by each worker pursuant to this Chapter VIII; and/or

38.3.2 Attendance sheets for each **Day** on which any employee of the **Contractor** and/or any of the **Subcontractor(s)** performed **Work** on the **Site**, which attendance sheet shall be in a form acceptable to the **Agency** and shall provide information acceptable to the **Agency** to identify each such employee; and/or

38.3.3 Any other information to satisfy the **Engineer**, the **Commissioner**, the **ACCO**, the **Agency EAO**, the **Agency Labor Law Investigator(s)** or the **Comptroller**, that this Chapter VIII and the Labor Law, as to the hours of employment and prevailing rates of wages and/or supplemental benefits, are being observed.

38.4 The failure of the **Contractor** or **Subcontractor(s)** to comply with the provisions of Articles 38.1 and/or 38.2 may result in the **Commissioner** declaring the **Contractor** in default and/or the withholding of payments otherwise due under the **Contract**.

ARTICLE 39. DUST HAZARDS

39.1 Should a harmful dust hazard be created in performing the **Work** of this **Contract**, for the elimination of which appliances or methods have been approved by the Board of Standards and Appeals of the City of New York, such appliances and methods shall be installed, maintained, and effectively operated during the continuance of such harmful dust hazard. Failure to comply with this provision after notice shall make this **Contract** voidable at the sole discretion of the **City**.

CHAPTER IX
PARTIAL AND FINAL PAYMENTS

ARTICLE 40. CONTRACT PRICE

40.1 The **City** shall pay, and the **Contractor** agrees to accept, in full consideration for the **Contractor's** performance of the **Work** subject to the terms and conditions hereof, the lump sum price or unit prices for which this **Contract** was awarded, plus the amount required to be paid for any **Extra Work** ordered by the **Commissioner** under Article 25, less credit for any **Work** omitted pursuant to Article 29.

ARTICLE 41. BID BREAKDOWN ON LUMP SUM

41.1 Within fifteen (15) **Days** after the commencement date specified in the **Notice to Proceed** or **Order to Work**, unless otherwise directed by the **Resident Engineer**, the **Contractor** shall submit to the **Resident Engineer** a breakdown of its bid price, or of lump sums bid for items of the **Contract**, showing the various operations to be performed under the **Contract**, as directed in the progress schedule required under Article 9, and the value of each of such operations, the total of such items to equal the lump sum price bid. Said breakdown must be approved in writing by the **Resident Engineer**.

41.2 No partial payment will be approved until the **Contractor** submits a bid breakdown that is acceptable to the **Resident Engineer**.

41.3 The **Contractor** shall also submit such other information relating to the bid breakdown as directed by the **Resident Engineer**. Thereafter, the breakdown may be used only for checking the **Contractor's** applications for partial payments hereunder, but shall not be binding upon the **City**, the **Commissioner**, or the **Engineer** for any purpose whatsoever.

ARTICLE 42. PARTIAL PAYMENTS

42.1 From time to time as the **Work** progresses satisfactorily, but not more often than once each calendar month (except where the **Commissioner** approves in writing the submission of invoices on a more frequent basis and for invoices relating to **Work** performed pursuant to a change order), the **Contractor** may submit to the **Engineer** a requisition for a partial payment in the prescribed form, which shall contain an estimate of the quantity and the fair value of the **Work** done during the payment period.

42.2 Partial payments may be made for materials, fixtures, and equipment in advance of their actual incorporation in the **Work**, as the **Commissioner** may approve, and upon the terms and conditions set forth in the General Conditions.

42.3 The **Contractor** shall also submit to the **Commissioner** in connection with every application for partial payment a verified statement in the form prescribed by the **Comptroller** setting forth the information required under Labor Law Section 220-a.

42.4 Within thirty (30) **Days** after receipt of a satisfactory payment application, and within sixty (60) **Days** after receipt of a satisfactory payment application in relation to **Work** performed pursuant to a change order, the **Engineer** will prepare and certify, and the **Commissioner** will approve, a voucher for a partial payment in the amount of such approved estimate, less any and all deductions authorized to be made by the **Commissioner** under the terms of this **Contract** or by **Law**.

ARTICLE 43. PROMPT PAYMENT

43.1 The Prompt Payment provisions of the **PPB** Rules in effect at the time of the bid will be applicable to payments made under this **Contract**. The provisions require the payment to the **Contractor** of interest on payments made after the required payment date, except as set forth in the **PPB** Rules.

43.2 The **Contractor** shall submit a proper invoice to receive payment, except where the **Contract** provides that the **Contractor** will be paid at predetermined intervals without having to submit an invoice for each scheduled payment.

43.3 Determination of interest due will be made in accordance with the **PPB** Rules.

43.4 If the **Contractor** is paid interest, the proportionate share(s) of that interest shall be forwarded by the **Contractor** to its **Subcontractor(s)**.

43.5 The **Contractor** shall pay each **Subcontractor** or **Materialman** not later than seven (7) **Days** after receipt of payment out of amounts paid to the **Contractor** by the **City** for **Work** performed by the **Subcontractor** or **Materialman** under this **Contract**.

> 43.5.1 If **Contractor** fails to make any payment to any **Subcontractor** or **Materialman** within seven (7) **Days** after receipt of payment by the **City** pursuant to this Article 43.5, then the **Contractor** shall pay interest on amounts due to such **Subcontractor** or **Materialman** at the rate of interest in effect on the date such payment is made by the **Contractor** computed in accordance with Section 756-b (1)(b) of the New York General Business Law. Accrual of interest shall commence on the **Day** immediately following the expiration of the seventh **Day** following receipt of payment by the **Contractor** from the **City** and shall end on the date on which payment is made.

43.6 The **Contractor** shall include in each of its subcontracts a provision requiring each **Subcontractor** to make payment to each of its **Subcontractors** or **Materialmen** for **Work** performed under this **Contract** in the same manner and within the same time period set forth above.

ARTICLE 44. SUBSTANTIAL COMPLETION PAYMENT

44.1 The **Contractor** shall submit with the **Substantial Completion** requisition:

> 44.1.1 A final verified statement of any pending Article 27 disputes in accordance with the **PPB** Rules and this **Contract** and any and all alleged claims against the **City**, in any way connected with or arising out of this **Contract** (including those as to which details may have been furnished pursuant to Articles 11, 27, 28, and 30) setting forth with respect to each

such claim the total amount thereof, the various items of labor and materials included therein, and the alleged value of each item; and if the alleged claim be one for delay, the alleged cause of each such delay, the period or periods of time, giving the dates when the **Contractor** claims the performance of the **Work** or a particular part thereof was delayed, and an itemized statement and breakdown of the amount claimed for each such delay.

44.1.1(a) With respect to each such claim, the **Commissioner**, the **Comptroller** and, in the event of litigation, the **City** Corporation Counsel shall have the same right to inspect, and to make extracts or copies of, the **Contractor's** books, vouchers, records, etc., as is referred to in Articles 11, 27, 28, and 30. Nothing contained in this Article 44.1.1(a) is intended to or shall relieve the **Contractor** from the obligation of complying strictly with Articles 11, 27, 28, and 30. The **Contractor** is warned that unless such claims are completely set forth as herein required, the **Contractor** upon acceptance of the **Substantial Completion** payment pursuant to this Article 44, will have waived any such claims.

44.1.2 A **Final Approved Punch List**.

44.1.3 Where required, a request for an extension of time to achieve **Substantial Completion** or final extension of time.

44.2 The **Commissioner** shall issue a voucher calling for payment of any part or all of the balance due for **Work** performed under the **Contract**, including monies retained under Article 21, less any and all deductions authorized to be made by the **Commissioner**, under this **Contract** or by **Law**, and less twice the amount the **Commissioner** considers necessary to ensure the completion of the balance of the **Work** by the **Contractor**. Such a payment shall be considered a partial and not a final payment. No **Substantial Completion** payment shall be made under this Article 44 where the **Contractor** failed to complete the **Work** within the time fixed for such completion in the Schedule A of the General Conditions, or within the time to which completion may have been extended, until an extension or extensions of time for the completion of **Work** have been acted upon pursuant to Article 13.

44.3 No further partial payments shall be made to the **Contractor** after **Substantial Completion**, except the **Substantial Completion** payment and payment pursuant to any **Contractor's** requisition that were properly filed with the **Commissioner** prior to the date of **Substantial Completion**; however, the **Commissioner** may grant a waiver for further partial payments after the date of **Substantial Completion** to permit payments for change order **Work** and/or release of retainage and deposits pursuant to Articles 21 and 24. Such waiver shall be in writing.

44.4 The **Contractor** acknowledges that nothing contained in this Article 44 is intended to or shall in any way diminish the force and effect of Article 13.

ARTICLE 45. FINAL PAYMENT

45.1 After completion and **Final Acceptance** of the **Work**, the **Contractor** shall submit all required certificates and documents, together with a requisition for the balance claimed to be due under the **Contract**, less the amount authorized to be retained for maintenance under Article 24. Such submission shall be within 90 days of the date of the **Commissioner's** written determination of **Final Acceptance**, or within such additional time as may be granted by the **Commissioner** in writing. If the **Contractor** fails to submit all required certificates and documents within the time allowed, no payment of the balance claimed shall be made to the **Contractor** and the **Contractor** shall be deemed to have forfeited its right to

payment of any balance claimed. A verified statement similar to that required in connection with applications for partial payments shall also be submitted to the **Commissioner**.

45.2 Amended Verified Statement of Claims: The **Contractor** shall also submit with the final requisition any amendments to the final verified statement of any pending dispute resolution procedures in accordance with the **PPB** Rules and this **Contract** and any and all alleged claims against the **City**, in any way connected with or arising out of this **Contract** (including those as to which details may have been furnished pursuant to Articles 11, 27, 28, and 30) that have occurred subsequent to **Substantial Completion**, setting forth with respect to each such claim the total amount thereof, the various items of labor and materials included therein, and the alleged value of each such item; and if the alleged claim be one for delay, the alleged cause of each such delay, the period or periods of time, giving the dates when the **Contractor** claims the performance of the **Work** or a particular part thereof was delayed, and an itemized statement and breakdown of the amount claimed for each such delay. With reference to each such claim, the **Commissioner**, the **Comptroller** and, in the event of litigation, the **City** Corporation Counsel shall have the same right to inspect, and to make extracts or copies of, the **Contractor's** books, vouchers, records, etc., as is referred to in Articles 11, 27, 28, and 30. Nothing contained in this Article 45.2, is intended to or shall relieve the **Contractor** from the obligation of complying strictly with Articles 11, 27, 28, and 30. The **Contractor** is warned that unless such claims are completely set forth as herein required, the **Contractor**, upon acceptance of the Final Payment pursuant to Article 46, will have waived any such claims.

45.3 Preparation of Final Voucher: Upon determining the balance due hereunder other than on account of claims, the **Engineer** will prepare and certify, for the Commissioner's approval, a voucher for final payment in that amount less any and all deductions authorized to be made by the **Commissioner** under this **Contract** or by **Law**. In the case of a lump sum **Contract**, the **Commissioner** shall certify the voucher for final payment within thirty (30) **Days** from the date of completion and acceptance of the **Work**, provided all requests for extensions of time have been acted upon.

45.3.1 All prior certificates and vouchers upon which partial payments were made, being merely estimates made to enable the **Contractor** to prosecute the **Work** more advantageously, shall be subject to correction in the final voucher, and the certification of the **Engineer** thereon and the approval of the **Commissioner** thereof, shall be conditions precedent to the right of the **Contractor** to receive any money hereunder. Such final voucher shall be binding and conclusive upon the **Contractor**.

45.3.2 Payment pursuant to such final voucher, less any deductions authorized to be made by the **Commissioner** under this **Contract** or by **Law**, shall constitute the final payment, and shall be made by the **Comptroller** within thirty (30) **Days** after the filing of such voucher in his/her office.

45.4 The **Contractor** acknowledges that nothing contained in this Article 45 is intended to or shall in any way diminish the force and effect of Article 13.

ARTICLE 46. ACCEPTANCE OF FINAL PAYMENT

46.1 The acceptance by the **Contractor**, or by anyone claiming by or through it, of the final payment, whether such payment be made pursuant to any judgment of any court, or otherwise, shall constitute and operate as a release of the **City** from any and all claims of and liability to the **Contractor** for anything heretofore done or furnished for the **Contractor** relating to or arising out of this **Contract** and the **Work** done hereunder, and for any prior act, neglect or default on the part of the **City** or any of its officials, agents or employees, excepting only a claim against the **City** for the amounts deducted or retained in accordance with the terms and provisions of this **Contract** or by **Law**, and excepting any

claims, not otherwise waived, or any pending dispute resolution procedures which are contained in the verified statement filed with the **Contractor's** substantial and final requisitions pursuant to Articles 44 and 45.

46.2 The **Contractor** is warned that the execution by it of a release, in connection with the acceptance of the final payment, containing language purporting to reserve claims other than those herein specifically excepted from the operation of this Article 46, or those for amounts deducted by the **Commissioner** from the final requisition or from the final payment as certified by the **Engineer** and approved by the **Commissioner**, shall not be effective to reserve such claims, anything stated to the **Contractor** orally or in writing by any official, agent or employee of the **City** to the contrary notwithstanding.

46.3 Should the **Contractor** refuse to accept the final payment as tendered by the **Comptroller**, it shall constitute a waiver of any right to interest thereon.

46.4 The **Contractor**, however, shall not be barred by this Article 46 from commencing an action for breach of **Contract** to the extent permitted by **Law** and by the terms of the **Contract** for any claims that are contained in the verified statement filed with the **Contractor's** substantial and final requisitions pursuant to Articles 44 and 45 or that arose after submission of the final payment requisition, provided that a detailed and verified statement of claim is served upon the contracting **Agency** and **Comptroller** not later than forty (40) **Days** after the making of such final payment by electronic funds transfer (EFT) or the mailing of such final payment. The statement shall specify the items upon which the claim will be based and any such claim shall be limited to such items.

ARTICLE 47. APPROVAL BY PUBLIC DESIGN COMMISSION

47.1 All works of art, including paintings, mural decorations, stained glass, statues, bas-reliefs, and other sculptures, monuments, fountains, arches, and other structures of a permanent character intended for ornament or commemoration, and every design of the same to be used in the performance of this **Contract**, and the design of all bridges, approaches, buildings, gates, fences, lamps, or structures to be erected, pursuant to the terms of this **Contract**, shall be submitted to the Art Commission, d/b/a the Public Design Commission of the City of New York, and shall be approved by the Public Design Commission prior to the erection or placing in position of the same. The final payment shall not become due or payable under this **Contract** unless and until the Public Design Commission shall certify that the design for the **Work** herein contracted for has been approved by the said Public Design Commission, and that the same has been executed in substantial accordance with the design so approved, pursuant to the provisions of Chapter 37, Section 854 of the **City** Charter, as amended.

CHAPTER X
CONTRACTOR'S DEFAULT

ARTICLE 48. COMMISSIONER'S RIGHT TO DECLARE CONTRACTOR IN DEFAULT

48.1 In addition to those instances specifically referred to in other Articles herein, the **Commissioner** shall have the right to declare the **Contractor** in default of this **Contract** if:

48.1.1 The **Contractor** fails to commence **Work** when notified to do so by the **Commissioner**; or
if

48.1.2 The **Contractor** shall abandon the **Work**; or if

48.1.3 The **Contractor** shall refuse to proceed with the **Work** when and as directed by the **Commissioner**; or if

48.1.4 The **Contractor** shall, without just cause, reduce its working force to a number which, if maintained, would be insufficient, in the opinion of the **Commissioner**, to complete the **Work** in accordance with the progress schedule; or if

48.1.5 The **Contractor** shall fail or refuse to increase sufficiently such working force when ordered to do so by the **Commissioner**; or if

48.1.6 The **Contractor** shall sublet, assign, transfer, convert or otherwise dispose of this **Contract** other than as herein specified; or sell or assign a majority interest in the **Contractor**; or if

48.1.7 The **Contractor** fails to secure and maintain all required insurance; or if

48.1.8 A receiver or receivers are appointed to take charge of the **Contractor's** property or affairs; or if

48.1.9 The **Commissioner** shall be of the opinion that the **Contractor** is or has been unnecessarily or unreasonably or willfully delaying the performance and completion of the **Work**, or the award of necessary subcontracts, or the placing of necessary material and equipment orders; or if

48.1.10 The **Commissioner** shall be of the opinion that the **Contractor** is or has been willfully or in bad faith violating any of the provisions of this **Contract**; or if

48.1.11 The **Commissioner** shall be of the opinion that the **Work** cannot be completed within the time herein provided therefor or within the time to which such completion may have been extended; provided, however, that the impossibility of timely completion is, in the **Commissioner's** opinion, attributable to conditions within the **Contractor's** control; or if

48.1.12 The **Work** is not completed within the time herein provided therefor or within the time to which the **Contractor** may be entitled to have such completion extended; or if

48.1.13 Any statement or representation of the **Contractor** in the **Contract** or in any document submitted by the **Contractor** with respect to the **Work**, the **Project**, or the **Contract** (or for purposes of securing the **Contract**) was untrue or incorrect when made; or if

48.1.14 The **Contractor** or any of its officers, directors, partners, five (5%) percent shareholders, principals, or other persons substantially involved in its activities, commits any of the acts or omissions specified as the grounds for debarment in the **PPB** Rules.

48.2 Before the **Commissioner** shall exercise his/her right to declare the **Contractor** in default, the **Commissioner** shall give the **Contractor** an opportunity to be heard, upon not less than two (2) **Days** notice.

ARTICLE 49. EXERCISE OF THE RIGHT TO DECLARE DEFAULT

49.1 The right to declare the **Contractor** in default for any of the grounds specified or referred to in Article 48 shall be exercised by sending the **Contractor** a notice, signed by the **Commissioner**, setting forth the ground or grounds upon which such default is declared (hereinafter referred to as a "Notice of Default").

49.2 The **Commissioner's** determination that the **Contractor** is in default shall be conclusive, final, and binding on the parties and such a finding shall preclude the **Contractor** from commencing a plenary action for any damages relating to the **Contract**. If the **Contractor** protests the determination of the **Commissioner**, the **Contractor** may commence an action in a court of competent jurisdiction of the State of New York under Article 78 of the New York Civil Practice Law and Rules.

ARTICLE 50. QUITTING THE SITE

50.1 Upon receipt of such notice the **Contractor** shall immediately discontinue all further operations under this **Contract** and shall immediately quit the **Site**, leaving untouched all plant, materials, equipment, tools, and supplies then on the **Site**.

ARTICLE 51. COMPLETION OF THE WORK

51.1 The **Commissioner**, after declaring the **Contractor** in default, may then have the **Work** completed by such means and in such manner, by contract with or without public letting, or otherwise, as he/she may deem advisable, utilizing for such purpose such of the **Contractor's** plant, materials, equipment, tools, and supplies remaining on the **Site**, and also such **Subcontractors**, as he/she may deem advisable.

51.2 After such completion, the **Commissioner** shall make a certificate stating the expense incurred in such completion, which shall include the cost of re-letting and also the total amount of liquidated damages (at the rate provided for in the **Contract**) from the date when the **Work** should have been completed by the **Contractor** in accordance with the terms hereof to the date of actual completion of the **Work**. Such certificate shall be binding and conclusive upon the **Contractor**, its sureties, and any person claiming under the **Contractor**, as to the amount thereof.

51.3 The expense of such completion, including any and all related and incidental costs, as so certified by the **Commissioner**, and any liquidated damages assessed against the **Contractor**, shall be charged against and deducted out of monies which are earned by the **Contractor** prior to the date of default. Should the expense of such completion, as certified by the **Commissioner**, exceed the total sum which would have been payable under the **Contract** if it had been completed by the **Contractor**, any excess shall be paid by the **Contractor**.

ARTICLE 52. PARTIAL DEFAULT

52.1 In case the **Commissioner** shall declare the **Contractor** in default as to a part of the **Work** only, the **Contractor** shall discontinue such part, shall continue performing the remainder of the **Work** in strict conformity with the terms of this **Contract**, and shall in no way hinder or interfere with any **Other**

Contractor(s) or persons whom the **Commissioner** may engage to complete the **Work** as to which the **Contractor** was declared in default.

52.2 The provisions of this Chapter relating to declaring the **Contractor** in default as to the entire **Work** shall be equally applicable to a declaration of partial default, except that the **Commissioner** shall be entitled to utilize for completion of the part of the **Work** as to which the **Contractor** was declared in default only such plant, materials, equipment, tools, and supplies as had been previously used by the **Contractor** on such part.

ARTICLE 53. PERFORMANCE OF UNCOMPLETED WORK

53.1 In completing the whole or any part of the **Work** under the provisions of this Chapter X, the **Commissioner** shall have the power to depart from or change or vary the terms and provisions of this **Contract**, provided, however, that such departure, change or variation is made for the purpose of reducing the time or expense of such completion. Such departure, change or variation, even to the extent of accepting a lesser or different performance, shall not affect the conclusiveness of the **Commissioner's** certificate of the cost of completion referred to in Article 51, nor shall it constitute a defense to an action to recover the amount by which such certificate exceeds the amount which would have been payable to the **Contractor** hereunder but for its default.

ARTICLE 54. OTHER REMEDIES

54.1 In addition to the right to declare the **Contractor** in default pursuant to this Chapter X, the **Commissioner** shall have the absolute right, in his/her sole discretion and without a hearing, to complete or cause to be completed in the same manner as described in Articles 51 and 53, any or all unsatisfactory or uncompleted punch list **Work** that remains after the completion date specified in the **Final Approved Punch List**. A written notice of the exercise of this right shall be sent to the **Contractor** who shall immediately quit the **Site** in accordance with the provisions of Article 50.

54.2 The expense of completion permitted under Article 54.1, including any and all related and incidental costs, as so certified by the **Commissioner**, shall be charged against and deducted out of monies which have been earned by the **Contractor** prior to the date of the exercise of the right set forth in Article 54.1; the balance of such monies, if any, subject to the other provisions of this **Contract**, to be paid to the **Contractor** without interest after such completion. Should the expense of such completion, as certified by the **Commissioner**, exceed the total sum which would have been payable under the **Contract** if it had been completed by the **Contractor**, any excess shall be paid by the **Contractor**.

54.3 The previous provisions of this Chapter X shall be in addition to any and all other remedies available under **Law** or in equity.

54.4 The exercise by the **City** of any remedy set forth herein shall not be deemed a waiver by the **City** of any other legal or equitable remedy contained in this **Contract** or provided under **Law**.

CHAPTER XI
MISCELLANEOUS PROVISIONS

ARTICLE 55. CONTRACTOR'S WARRANTIES

55.1 In consideration of, and to induce, the award of this **Contract** to the **Contractor**, the **Contractor** represents and warrants:

55.1.1 That it is financially solvent, sufficiently experienced and competent to perform the **Work**; and

55.1.2 That the facts stated in its bid and the information given by it pursuant to the Information for Bidders is true and correct in all respects; and

55.1.3 That it has read and complied with all requirements set forth in the **Contract**.

ARTICLE 56. CLAIMS AND ACTIONS THEREON

56.1 Any claim, that is not subject to dispute resolution under the **PPB** Rules or this **Contract**, against the **City** for damages for breach of **Contract** shall not be made or asserted in any action, unless the **Contractor** shall have strictly complied with all requirements relating to the giving of notice and of information with respect to such claims, as herein before provided.

56.2 Nor shall any action be instituted or maintained on any such claims unless such action is commenced within six (6) months after **Substantial Completion**; except that:

56.2.1 Any claims arising out of events occurring after **Substantial Completion** and before **Final Acceptance** of the **Work** shall be asserted within six (6) months of **Final Acceptance** of the **Work**;

56.2.2 Any claims for monies deducted, retained or withheld under the provisions of this **Contract** shall be asserted within six (6) months after the date when such monies otherwise become due and payable hereunder; and

56.2.3 If the **Commissioner** exercises his/her right to terminate the **Contract** pursuant to Article 64, any such action shall be commenced within six (6) months of the date the **Commissioner** exercises said right.

ARTICLE 57. INFRINGEMENT

57.1 The **Contractor** shall be solely responsible for and shall defend, indemnify, and hold the **City** harmless from any and all claims (even if the allegations of the lawsuit are without merit) and judgments for damages and from costs and expenses to which the **City** may be subject to or which it may suffer or incur allegedly arising out of or in connection with any infringement by the **Contractor** of any copyright, trade secrets, trademark or patent rights or any other property or personal right of any third party by the **Contractor** and/or its **Subcontractors** in the performance or completion of the **Work**. Insofar as the facts or **Law** relating to any claim would preclude the **City** from being completely indemnified by the **Contractor**, the **City** shall be partially indemnified by the **Contractor** to the fullest extent permitted by **Law**.

ARTICLE 58. NO CLAIM AGAINST OFFICIALS, AGENTS OR EMPLOYEES

58.1 No claim whatsoever shall be made by the **Contractor** against any official, agent or employee of the **City** for, or on account of, anything done or omitted to be done in connection with this **Contract**.

ARTICLE 59. SERVICE OF NOTICES

59.1 The **Contractor** hereby designates the business address, fax number, and email address specified in its bid, as the place where all notices, directions or other communications to the **Contractor** may be delivered, or to which they may be mailed. Any notice, direction, or communication from either party to the other shall be in writing and shall be deemed to have been given when (i) delivered personally; (ii) sent by certified mail, return receipt requested; (iii) delivered by overnight or same day courier service in a properly addressed envelope with confirmation; or (iv) sent by fax or email and, unless receipt of the fax or e-mail is acknowledged by the recipient by fax or e-mail, deposited in a post office box regularly maintained by the United States Postal Service in a properly addressed, postage pre-paid envelope.

59.2 **Contractor's** notice address, email address, or fax number may be changed at any time by an instrument in writing, executed and acknowledged by the **Contractor**, and delivered to the **Commissioner**.

59.3 Nothing herein contained shall, however, be deemed to preclude or render inoperative the service of any notice, direction or other communication upon the **Contractor** personally, or, if the **Contractor** is a corporation, upon any officer thereof.

ARTICLE 60. UNLAWFUL PROVISIONS DEEMED STRICKEN FROM CONTRACT

60.1 If this **Contract** contains any unlawful provision not an essential part of the **Contract** and which shall not appear to have been a controlling or material inducement to the making thereof, the same shall be deemed of no effect and shall, upon notice by either party, be deemed stricken from the **Contract** without affecting the binding force of the remainder.

ARTICLE 61. ALL LEGAL PROVISIONS DEEMED INCLUDED

61.1 It is the intent and understanding of the parties to this **Contract** that each and every provision of **Law** required to be inserted in this **Contract** shall be and is inserted herein. Furthermore, it is hereby stipulated that every such provision is to be deemed to be inserted herein, and if, through mistake or otherwise, any such provision is not inserted, or is not inserted in correct form, then this **Contract** shall forthwith upon the application of either party be amended by such insertion so as to comply strictly with the **Law** and without prejudice to the rights of either party hereunder.

ARTICLE 62. TAX EXEMPTION

62.1 The **City** is exempt from payment of Federal, State, and local taxes, including sales and compensating use taxes of the State of New York and its cities and counties on all tangible personal property sold to the **City** pursuant to the provisions of this **Contract**. These taxes are not to be included in bids. However, this exemption does not apply to tools, machinery, equipment or other property leased by or to the **Contractor**, **Subcontractor** or **Materialman** or to tangible personal property which, even

though it is consumed, is not incorporated into the completed **Work** (consumable supplies) and tangible personal property that the **Contractor** is required to remove from the **Site** during or upon completion of the **Work**. The **Contractor** and its **Subcontractors** and **Materialmen** shall be responsible for and pay any and all applicable taxes, including sales and compensating use taxes, on such leased tools, machinery, equipment or other property and upon all such consumable supplies and tangible personal property that the **Contractor** is required to remove from the **Site** during or upon completion of the **Work**.

62.2 The **Contractor** agrees to sell and the **City** agrees to purchase all tangible personal property, other than consumable supplies and other tangible personal property that the **Contractor** is required to remove from the **Site** during or upon completion of the **Work**, that is required, necessary or proper for or incidental to the construction of the **Project** covered by this **Contract**. The sum paid under this **Contract** for such tangible personal property shall be in full payment and consideration for the sale of such tangible personal property.

62.2.1 The **Contractor** agrees to construct the **Project** and to perform all **Work**, labor and services rendered, necessary, proper or incidental thereto for the sum shown in the bid for the performance of such **Work**, labor, and services, and the sum so paid pursuant to this **Contract** for such **Work**, labor, and services, shall be in full consideration for the performance by the **Contractor** of all its duties and obligations under this **Contract** in connection with said **Work,** labor, and services.

62.3 20 NYCRR Section 541.3(d) provides that a **Contractor**'s purchases of tangible personal property that is either incorporated into real property owned by a governmental entity or purchased for and sold to a governmental entity are exempt from sales and use tax. The **City** shall not pay sales tax for any such tangible personal property that it purchases from the **Contractor** pursuant to the **Contract.** With respect to such tangible personal property, the **Contractor**, at the request of the **City**, shall furnish to the **City** such bills of sale and other instruments as may be required by the **City**, properly executed, acknowledged and delivered assuring to the **City** title to such tangible personal property, free of liens and/or encumbrances, and the **Contractor** shall mark or otherwise identify all such tangible personal property as the property of the **City**.

62.4 Title to all tangible personal property to be sold by the **Contractor** to the **City** pursuant to the provisions of the **Contract** shall immediately vest in and become the sole property of the **City** upon delivery of such tangible personal property to the **Site**. Notwithstanding such transfer of title, the **Contractor** shall have the full and continuing responsibility to install such tangible personal property in accordance with the provisions of this **Contract**, protect it, maintain it in a proper condition and forthwith repair, replace and make good any damage thereto, theft or disappearance thereof, and furnish additional tangible personal property in place of any that may be lost, stolen or rendered unusable, without cost to the **City**, until such time as the **Work** covered by the **Contract** is fully accepted by the **City**. Such transfer of title shall in no way affect any of the **Contractor's** obligations hereunder. In the event that, after title has passed to the **City**, any of the tangible personal property is rejected as being defective or otherwise unsatisfactory, title to all such tangible personal property shall be deemed to have been transferred back to the **Contractor**.

62.5 The purchase by **Subcontractors** or **Materialmen** of tangible personal property to be sold hereunder shall be a purchase or procurement for resale to the **Contractor** (either directly or through other **Subcontractors**) and therefore not subject to the aforesaid sales and compensating use taxes, provided that the subcontracts and purchase agreements provide for the resale of such tangible personal property and that such subcontracts and purchase agreements are in a form similar to this **Contract** with respect to the separation of the sale of consumable supplies and tangible personal property that the **Contractor** is required to remove from the **Site** during or upon completion of the **Work** from the **Work** and labor, services, and any other matters to be provided, and provided further that the subcontracts and

purchase agreements provide separate prices for tangible personal property and all other services and matters. Such separation shall actually be followed in practice, including the separation of payments for tangible personal property from the payments for other **Work** and labor and other things to be provided.

62.6 The **Contractor** and its **Subcontractors** and **Materialmen** shall furnish a **Contractor** Exempt Purchase Certificate to all persons, firms or corporations from which they purchase tangible personal property for the performance of the **Work** covered by this **Contract**.

62.7 In the event any of the provisions of this Article 62 shall be deemed to be in conflict with any other provisions of this **Contract** or create any ambiguity, then the provisions of this Article 62 shall control.

ARTICLE 63. INVESTIGATION(S) CLAUSE

63.1 The parties to this **Contract** agree to cooperate fully and faithfully with any investigation, audit or inquiry conducted by a United States, a State of New York (State) or a **City** governmental agency or authority that is empowered directly or by designation to compel the attendance of witnesses and to examine witnesses under oath, or conducted by the Inspector General of a governmental agency that is a party in interest to the transaction, submitted bid, submitted proposal, contract, lease, permit or license that is the subject of the investigation, audit or inquiry.

63.2 If any person who has been advised that his/her statement, and any information from such statement, will not be used against him/her in any subsequent criminal proceeding refuses to testify before a grand jury or other governmental agency or authority empowered directly or by designation to compel the attendance of witnesses and to examine witnesses under oath concerning the award of or performance under any transaction, agreement, lease, permit, contract, or license entered into with the **City**, the State, or any political subdivision or public authority thereof, or the Port Authority of New York and New Jersey, or any local development corporation within the **City**, or any public benefit corporation organized under the **Laws** of the State of New York, or;

63.3 If any person refuses to testify for a reason other than the assertion of his/her privilege against self incrimination in an investigation, audit or inquiry conducted by a **City** or State governmental agency or authority empowered directly or by designation to compel the attendance of witnesses and to take testimony under oath, or by the Inspector General of the governmental agency that is a party in interest in, and is seeking testimony concerning the award of, or performance under any transaction, agreement, lease, permit, contract, or license entered into with the **City**, the State, or any political subdivision thereof or any local development corporation within the **City**, then;

63.4 The **Commissioner** whose **Agency** is a party in interest to the transaction, submitted bid, submitted proposal, contract, lease, permit, or license shall convene a hearing, upon not less than five (5) **Days**' written notice to the parties involved to determine if any penalties should attach for the failure of a person to testify.

63.5 If any non-governmental party to the hearing requests an adjournment, the **Commissioner** who convened the hearing may, upon granting the adjournment, suspend any contract, lease, permit, or license, pending the final determination pursuant to Article 63.7 without the **City** incurring any penalty or damages for delay or otherwise.

63.6 The penalties which may attach after a final determination by the **Commissioner** may include but shall not exceed:

63.6.1 The disqualification for a period not to exceed five (5) years from the date of an adverse determination for any person, or any entity of which such person was a member at the time the testimony was sought, from submitting bids for, or transacting business with, or entering into or obtaining any contract, lease, permit or license with or from the **City**; and/or

63.6.2 The cancellation or termination of any and all such existing **City** contracts, leases, permits or licenses that the refusal to testify concerns and that have not been assigned as permitted under this **Contract**, nor the proceeds of which pledged, to an unaffiliated and unrelated institutional lender for fair value prior to the issuance of the notice scheduling the hearing, without the **City** incurring any penalty or damages on account of such cancellation or termination; monies lawfully due for goods delivered, work done, rentals, or fees accrued prior to the cancellation or termination shall be paid by the **City**.

63.7 The **Commissioner** shall consider and address in reaching his/her determination and in assessing an appropriate penalty the factors in Articles 63.7.1 and 63.7.2. The **Commissioner** may also consider, if relevant and appropriate, the criteria established in Articles 63.7.3 and 63.7.4, in addition to any other information which may be relevant and appropriate:

63.7.1 The party's good faith endeavors or lack thereof to cooperate fully and faithfully with any governmental investigation or audit, including but not limited to the discipline, discharge, or disassociation of any person failing to testify, the production of accurate and complete books and records, and the forthcoming testimony of all other members, agents, assignees or fiduciaries whose testimony is sought.

63.7.2 The relationship of the person who refused to testify to any entity that is a party to the hearing, including but not limited to, whether the person whose testimony is sought has an ownership interest in the entity and/or the degree of authority and responsibility the person has within the entity.

63.7.3 The nexus of the testimony sought to the subject entity and its contracts, leases, permits or licenses with the **City**.

63.7.4 The effect a penalty may have on an unaffiliated and unrelated party or entity that has a significant interest in an entity subject to penalties under Article 63.6, provided that the party or entity has given actual notice to the **Commissioner** upon the acquisition of the interest, or at the hearing called for in Article 63.4, gives notice and proves that such interest was previously acquired. Under either circumstance the party or entity shall present evidence at the hearing demonstrating the potential adverse impact a penalty will have on such person or entity.

63.8 Definitions:

63.8.1 The term "license" or "permit" as used in this Article 63 shall be defined as a license, permit, franchise or concession not granted as a matter of right.

63.8.2 The term "person" as used in this Article 63 shall be defined as any natural person doing business alone or associated with another person or entity as a partner, director, officer, principal or employee.

63.8.3 The term "entity" as used in this Article 63 shall be defined as any firm, partnership, corporation, association, joint venture, or person that receives monies, benefits, licenses, leases, or permits from or through the **City** or otherwise transacts business with the **City**.

63.8.4 The term "member" as used in this Article 63 shall be defined as any person associated with another person or entity as a partner, director, officer, principal or employee.

63.9 In addition to and notwithstanding any other provision of this **Contract**, the **Commissioner** may in his/her sole discretion terminate this **Contract** upon not less than three (3) **Days'** written notice in the event the **Contractor** fails to promptly report in writing to the **Commissioner** of the Department of Investigations ("DOI") of the **City** any solicitation of money, goods, requests for future employment or other benefit or thing of value, by or on behalf of any employee of the **City** or other person, firm, corporation or entity for any purpose which may be related to the procurement or obtaining of this **Contract** by the **Contractor**, or affecting the performance of this **Contract**.

ARTICLE 64. TERMINATION BY THE CITY

64.1 In addition to termination pursuant to any other article of this **Contract**, the **Commissioner** may, at any time, terminate this **Contract** by written notice to the **Contractor**. In the event of termination, the **Contractor** shall, upon receipt of such notice, unless otherwise directed by the **Commissioner**:

64.1.1 Stop **Work** on the date specified in the notice;

64.1.2 Take such action as may be necessary for the protection and preservation of the **City's** materials and property;

64.1.3 Cancel all cancelable orders for material and equipment;

64.1.4 Assign to the **City** and deliver to the **Site** or another location designated by the **Commissioner**, any non-cancelable orders for material and equipment that is not capable of use except in the performance of this **Contract** and has been specifically fabricated for the sole purpose of this **Contract** and not incorporated in the **Work**;

64.1.5 Take no action which will increase the amounts payable by the **City** under this **Contract**.

64.2 In the event of termination by the **City** pursuant to this Article 64, payment to the **Contractor** shall be in accordance with Articles 64.2.1, 64.2.2 or 64.2.3, to the extent that each respective article applies.

64.2.1 Lump Sum Contracts or Items: On all lump sum **Contracts**, or on lump sum items in a **Contract**, the **City** will pay the **Contractor** the sum of the amounts described in Articles 64.2.1(a) and 64.2.1(b), less all payments previously made pursuant to this **Contract**. On lump sum **Contracts** only, the **City** will also pay the **Contractor** an additional sum as provided in Article 64.2.1(c).

64.2.1(a) For **Work** completed prior to the notice of termination, the **Contractor** shall be paid a pro rata portion of the lump sum bid amount, plus approved change orders, based upon the percent completion of the **Work**, as determined by the **Commissioner**. For the purpose of determining the pro rata portion of the lump sum bid amount to which the **Contractor** is entitled, the bid breakdown submitted in accordance with Article 41 shall be considered, but shall not be dispositive. The **Commissioner's** determination hereunder shall be final, binding, and conclusive.

64.2.1(b) For non-cancelable material and equipment that is not capable of use except in the performance of this **Contract** and has been specifically fabricated for the sole purpose of this **Contract**, but not yet incorporated in the **Work**, the **Contractor** shall be paid the lesser of the following, less salvage value:

64.2.1(b)(i) The Direct Cost, as defined in Article 64.2.4; or

64.2.1(b)(ii) The fair and reasonable value, if less than Direct Cost, of such material and equipment, plus necessary and reasonable delivery costs.

64.2.1(b)(iii) In addition, the **Contractor** shall be paid five (5%) percent of the amount described in Article 64.2.1(b)(i) or Article 64.2.1(b)(ii), whichever applies.

64.2.1(c) Except as otherwise provided in Article 64.2.1(d), on all lump sum **Contracts**, the **Contractor** shall be paid the percentage indicated below applied to the difference between the total lump sum bid amount and the total of all payments made prior to the notice of termination plus all payments allowed pursuant to Articles 64.2.1(a) and 64.2.1(b):

64.2.1(c)(i) Five (5%) percent of the first five million ($5,000,000) dollars; and

64.2.1(c)(ii) Three (3%) percent of any amount between five million ($5,000,000) dollars and fifteen million ($15,000,000) dollars; plus

64.2.1(c)(iii) One (1%) percent of any amount over fifteen million ($15,000,000) dollars.

64.2.1(d) In the event the **City** terminates a lump sum **Contract** pursuant to this Article 64 within ninety (90) **Days** after registration of the **Contract** with the **Comptroller**, the **Contractor** shall be paid one (1%) percent of the difference between the lump sum bid amount and the total of all payments made pursuant to this Article 64.2.

64.2.2 Unit Price Contracts or Items: On all unit price **Contracts**, or on unit price items in a **Contract**, the **City** will pay the **Contractor** the sum of the amounts described in Articles 64.2.2(a) and 64.2.2(b), less all payments previously made pursuant to this **Contract**:

64.2.2(a) For all completed units, the unit price stated in the **Contract**, and

64.2.2(b) For units that have been ordered but are only partially completed, the **Contractor** will be paid:

64.2.2(b)(i) A pro rata portion of the unit price stated in the **Contract** based upon the percent completion of the unit and

64.2.2(b)(ii) For non-cancelable material and equipment, payment will be made pursuant to Article 64.2.1(b).

64.2.3 Time and Materials Contracts or Items Based on Time and Material Records: On all **Contracts** or items in a **Contract** where payment for the **Work** is based on time and

material records, the **Contractor** shall be paid in accordance with Article 26, less all payments previously made pursuant to this **Contract**.

64.2.4 Direct Costs: Direct Costs as used in this Article 64.2 shall mean:

64.2.4(a) The actual purchase price of material and equipment, plus necessary and reasonable delivery costs,

64.2.4(b) The actual cost of labor involved in construction and installation at the **Site**, and

64.2.4(c) The actual cost of necessary bonds and insurance purchased pursuant to requirements of this **Contract** less any amounts that have been or should be refunded by the **Contractor's** sureties or insurance carriers.

64.2.4(d) Direct Costs shall not include overhead.

64.3 In no event shall any payments under this Article 64 exceed the **Contract** price for such items.

64.4 All payments pursuant to Article 64 shall be in the nature of liquidated damages and shall be accepted by the **Contractor** in full satisfaction of all claims against the **City**.

64.5 The **City** may deduct or set off against any sums due and payable pursuant to this Article 64, any deductions authorized by this **Contract** or by **Law** (including but not limited to liquidated damages) and any claims it may have against the **Contractor**. The **City's** exercise of the right to terminate the **Contract** pursuant to this Article 64 shall not impair or otherwise effect the **City's** right to assert any claims it may have against the **Contractor** in a plenary action.

64.6 Where the **Work** covered by the **Contract** has been substantially completed, as determined in writing by the **Commissioner**, termination of the **Work** shall be handled as an omission of **Work** pursuant to Articles 29 and 33, in which case a change order will be issued to reflect an appropriate reduction in the **Contract** sum, or if the amount is determined after final payment, such amount shall be paid by the **Contractor**.

ARTICLE 65. CHOICE OF LAW, CONSENT TO JURISDICTION AND VENUE

65.1 This **Contract** shall be deemed to be executed in the **City** regardless of the domicile of the **Contractor**, and shall be governed by and construed in accordance with the **Laws** of the State of New York and the **Laws** of the United States, where applicable.

65.2 The parties agree that any and all claims asserted against the **City** arising under this **Contract** or related thereto shall be heard and determined in the courts of the State of New York ("New York State Courts") located in the **City** and County of New York. To effect this **Contract** and intent, the **Contractor** agrees:

65.2.1 If the **City** initiates any action against the **Contractor** in Federal court or in a New York State Court, service of process may be made on the **Contractor** either in person, wherever such **Contractor** may be found, or by registered mail addressed to the **Contractor** at its address as set forth in this **Contract**, or to such other address as the **Contractor** may provide to the **City** in writing; and

65.2.2 With respect to any action between the **City** and the **Contractor** in a New York State Court, the **Contractor** hereby expressly waives and relinquishes any rights it might otherwise have:

65.2.2(a) To move to dismiss on grounds of forum non conveniens;

65.2.2(b) To remove to Federal Court; and

65.2.2(c) To move for a change of venue to a New York State Court outside New York County.

65.2.3 With respect to any action brought by the **City** against the **Contractor** in a Federal Court located in the **City**, the **Contractor** expressly waives and relinquishes any right it might otherwise have to move to transfer the action to a Federal Court outside the **City**.

65.2.4 If the **Contractor** commences any action against the **City** in a court located other than in the **City** and County of New York, upon request of the **City**, the **Contractor** shall either consent to a transfer of the action to a New York State Court of competent jurisdiction located in the **City** and County of New York or, if the Court where the action is initially brought will not or cannot transfer the action, the **Contractor** shall consent to dismiss such action without prejudice and may thereafter reinstate the action in a New York State Court of competent jurisdiction in New York County.

65.3 If any provision(s) of this Article 65 is held unenforceable for any reason, each and all other provision(s) shall nevertheless remain in full force and effect.

ARTICLE 66. PARTICIPATION IN AN INTERNATIONAL BOYCOTT

66.1 The **Contractor** agrees that neither the **Contractor** nor any substantially owned affiliated company is participating or shall participate in an international boycott in violation of the provisions of the Federal Export Administration Act of 1979, as amended, or the regulations of the United States Department of Commerce (Commerce Department) promulgated thereunder.

66.2 Upon the final determination by the Commerce Department or any other agency of the United States as to, or conviction of the **Contractor** or a substantially-owned affiliated company thereof for participation in an international boycott in violation of the provisions of the Export Administration Act of 1979, as amended, or the regulations promulgated thereunder, the **Comptroller** may, at his/her option, render forfeit and void this **Contract**.

66.3 The **Contractor** shall comply in all respects, with the provisions of Section 6-114 of the Administrative Code and the rules and regulations issued by the **Comptroller** thereunder.

ARTICLE 67. LOCALLY BASED ENTERPRISE PROGRAM

67.1 This **Contract** is subject to the requirements of Section 6-108.1 of the Administrative Code and regulations promulgated thereunder. No construction contract shall be awarded unless and until these requirements have been complied with in their entirety; however, compliance with this Article 67 is not required if the Agency sets Subcontractor Participation Goals for Minority- and Women-Owned Business Enterprises (M/WBEs).

67.2 Unless specifically waived by the **Commissioner** with the approval of the Division of Economic and Financial Opportunity of the **City** Department of Business Services, if any portion of the **Contract** is subcontracted, not less than ten (10%) percent of the total dollar amount of the **Contract** shall be awarded to locally based enterprises (LBEs); except that where less than ten (10%) percent of the total dollar amount of the **Contract** is subcontracted, such lesser percentage shall be so awarded.

67.3 The **Contractor** shall not require performance and payment bonds from LBE **Subcontractors**.

67.4 If the **Contractor** has indicated prior to award that no **Work** will be subcontracted, no **Work** shall be subcontracted without the prior approval of the **Commissioner**, which shall be granted only if the **Contractor** makes a good faith effort beginning at least six (6) weeks before the **Work** is to be performed to obtain LBE **Subcontractors** to perform the **Work**.

67.5 If the **Contractor** has not identified sufficient LBE **Subcontractors** prior to award, it shall sign a letter of compliance stating that it complies with Section 6-108.1 of the Administrative Code, recognizes that achieving the LBE requirement is a condition of its **Contract**, and shall submit documentation demonstrating its good faith efforts to obtain LBEs. After award, the **Contractor** shall begin to solicit LBE's to perform subcontracted **Work** at least six (6) weeks before the date such **Work** is to be performed and shall demonstrate that a good faith effort has been made to obtain LBEs on each subcontract until it meets the required percentage.

67.6 Failure of the **Contractor** to comply with the requirements of Section 6-108.1 of the Administrative Code and the regulations promulgated thereunder shall constitute a material breach of this **Contract**. Remedy for such breach may include the imposition of any or all of the following sanctions:

67.6.1 Reducing the **Contractor's** compensation by an amount equal to the dollar value of the percentage of the LBE subcontracting requirement not complied with;

67.6.2 Declaring the **Contractor** in default;

67.6.3 If the **Contractor** is an LBE, de-certifying and declaring the **Contractor** ineligible to participate in the LBE program for a period of up to three (3) years.

ARTICLE 68. ANTITRUST

68.1 The **Contractor** hereby assigns, sells, and transfers to the **City** all right, title, and interest in and to any claims and causes of action arising under the antitrust **Laws** of New York State or of the United States relating to the particular goods or services purchased or procured by the **City** under this **Contract**.

ARTICLE 69. MacBRIDE PRINCIPLES PROVISIONS

69.1 Notice To All Prospective **Contractors**:

69.1.1 Local Law No. 34 of 1991 became effective on September 10, 1991 and added Section 6-115.1 of the Administrative Code. The local **Law** provides for certain restrictions on **City Contracts** to express the opposition of the people of the **City** to employment discrimination practices in Northern Ireland to promote freedom of work-place opportunity.

69.1.2 Pursuant to Section 6-115.1, prospective **Contractors** for **Contracts** to provide goods or services involving an expenditure of an amount greater than ten thousand

($10,000.) dollars, or for construction involving an amount greater than fifteen thousand ($15,000.) dollars, are asked to sign a rider in which they covenant and represent, as a material condition of their **Contract**, that any business operations in Northern Ireland conducted by the **Contractor** and any individual or legal entity in which the **Contractor** holds a ten (10%) percent or greater ownership interest in the **Contractor** will be conducted in accordance with the MacBride Principles of nondiscrimination in employment.

69.1.3 Prospective **Contractors** are not required to agree to these conditions. However, in the case of **Contracts** let by competitive sealed bidding, whenever the lowest responsible bidder has not agreed to stipulate to the conditions set forth in this notice and another bidder who has agreed to stipulate to such conditions has submitted a bid within five (5%) percent of the lowest responsible bid for a **Contract** to supply goods, services or contraction of comparable quality, the **Agency** shall refer such bids to the Mayor, the Speaker or other officials, as appropriate, who may determine, in accordance with applicable **Law**, that it is in the best interest of the **City** that the **Contract** be awarded to other than the lowest responsible pursuant to Section 313(b)(2) of the **City** Charter.

69.1.4 In the case of **Contracts** let by other than competitive sealed bidding, if a prospective **Contractor** does not agree to these conditions, no **Agency**, elected official or the **City** Council shall award the **Contract** to that bidder unless the **Agency** seeking to use the goods, services or construction certifies in writing that the **Contract** is necessary for the **Agency** to perform its functions and there is no other responsible **Contractor** who will supply goods, services or construction of comparable quality at a comparable price.

69.2 In accordance with Section 6-115.1 of the Administrative Code, the **Contractor** stipulates that such **Contractor** and any individual or legal entity in which the **Contractor** holds a ten (10%) percent or greater ownership interest in the **Contractor** either:

69.2.1 Have no business operations in Northern Ireland, or

69.2.2 Shall take lawful steps in good faith to conduct any business operations they have in Northern Ireland in accordance with the MacBride Principles, and shall permit independent monitoring of their compliance with such principles.

69.3 For purposes of this Article, the following terms shall have the following meanings:

69.3.1 "MacBride Principles" shall mean those principles relating to nondiscrimination in employment and freedom of work-place opportunity which require employers doing business in Northern Ireland to:

69.3.1(a) increase the representation of individuals from under-represented religious groups in the workforce, including managerial, supervisory, administrative, clerical and technical jobs;

69.3.1(b) take steps to promote adequate security for the protection of employees from under-represented religious groups both at the work-place and while traveling to and from **Work**;

69.3.1(c) ban provocative religious or political emblems from the workplace;

69.3.1(d) publicly advertise all job openings and make special recruitment efforts to attract applicants from under-represented religious groups;

69.3.1(e) establish layoff, recall, and termination procedures which do not in practice favor a particular religious group;

69.3.1(f) abolish all job reservations, apprenticeship restrictions and different employment criteria which discriminate on the basis of religion;

69.3.1(g) develop training programs that will prepare substantial numbers of current employees from under-represented religious groups for skilled jobs, including the expansion of existing programs and the creation of new programs to train, upgrade, and improve the skills of workers from under-represented religious groups;

69.3.1(h) establish procedures to asses, identify, and actively recruit employees from under-represented religious groups with potential for further advancement; and

69.3.1(i) appoint a senior management staff member to oversee affirmative action efforts and develop a timetable to ensure their full implementation.

69.4 The **Contractor** agrees that the covenants and representations in Article 69.2 are material conditions to this **Contract**. In the event the **Agency** receives information that the **Contractor** who made the stipulation required by this Article 69 is in violation thereof, the **Agency** shall review such information and give the **Contractor** an opportunity to respond. If the **Agency** finds that a violation has occurred, the **Agency** shall have the right to declare the **Contractor** in default in default and/or terminate this **Contract** for cause and procure supplies, services or **Work** from another source in the manner the **Agency** deems proper. In the event of such termination, the **Contractor** shall pay to the **Agency**, or the **Agency** in its sole discretion may withhold from any amounts otherwise payable to the **Contractor**, the difference between the **Contract** price for the uncompleted portion of this **Contract** and the cost to the **Agency** of completing performance of this **Contract** either itself or by engaging another **Contractor** or **Contractors**. In the case of a requirement **Contract**, the **Contractor** shall be liable for such difference in price for the entire amount of supplies required by the **Agency** for the uncompleted term of **Contractor's Contract**. In the case of a construction **Contract**, the **Agency** shall also have the right to hold the **Contractor** in partial or total default in accordance with the default provisions of this **Contract**, and/or may seek debarment or suspension of the **Contractor**. The rights and remedies of the **Agency** hereunder shall be in addition to, and not in lieu of, any rights and remedies the **Agency** has pursuant to this **Contract** or by operation of **Law**.

ARTICLE 70. ELECTRONIC FILING/NYC DEVELOPMENT HUB

70.1 The **Contractor** shall electronically file all alteration type-2 and alteration type-3 applications via the New York City Development Hub Web site, except applications for the following types of minor alterations: enlargements, curb cuts, legalizations, fire alarms, builders pavement plans, and jobs filed on Landmark Preservation Commission calendared properties. All such filings must be professionally certified. Information about electronic filing via the New York City Development Hub is available on the **City** Department of Buildings Web site at www.nyc.gov/buildings.

ARTICLE 71. PROHIBITION OF TROPICAL HARDWOODS

71.1 Tropical hardwoods, as defined in Section 165 of the New York State Finance Law (Finance Law), shall not be utilized in the performance of this **Contract** except as expressly permitted by Section 165 of the Finance Law.

ARTICLE 72. CONFLICTS OF INTEREST

72.1 Section 2604 of the **City** Charter and other related provisions of the **City** Charter, the Administrative Code, and the Penal Law are applicable under the terms of this **Contract** in relation to conflicts of interest and shall be extended to **Subcontractors** authorized to perform **Work**, labor and services pursuant to this **Contract** and further, it shall be the duty and responsibility of the **Contractor** to so inform its respective **Subcontractors**. Notice is hereby given that, under certain circumstances, penalties may be invoked against the donor as well as the recipient of any form of valuable gift.

ARTICLE 73. MERGER CLAUSE

73.1 The written **Contract** herein, contains all the terms and conditions agreed upon by the parties hereto, and no other agreement, oral or otherwise, regarding the subject matter of this **Contract** shall be deemed to exist or to bind any of the parties hereto, or to vary any of the terms contained herein.

ARTICLE 74. STATEMENT OF WORK

74.1 The **Contractor** shall furnish all labor and materials and perform all **Work** in strict accordance with the **Specifications** and **Addenda** thereto, numbered _____.

ARTICLE 75. COMPENSATION TO BE PAID TO CONTRACTOR

75.1 The **City** will pay and the **Contractor** will accept in full consideration for the performance of the **Contract**, subject to additions and deductions as provided herein, the total sum of: nine million, six hundred seventy-one Dollars, ($9,671,062.14), this said sum being the amount at which the **Contract** was awarded to the **Contractor** at a public letting thereof, based upon the **Contractor's** bid for the **Contract**.

nine million, six hundred seventy-one thousand, sixty-two 14/100

ARTICLE 76. ELECTRONIC FUNDS TRANSFER

76.1 In accordance with Section 6-107.1 of the Administrative Code, the **Contractor** agrees to accept payments under this **Contract** from the **City** by electronic funds transfer (EFT). An EFT is any transfer of funds, other than a transaction originated by check, draft or similar paper instrument, which is initiated through an electronic terminal, telephonic instrument or computer or magnetic tape so as to order, instruct or authorize a financial institution to debit or credit an account. Prior to the first payment made under this **Contract**, the **Contractor** shall designate one financial institution or other authorized payment agent and shall complete the attached "EFT Vendor Payment Enrollment Form" in order to provide the Commissioner of the **City** Department of Finance with information necessary for the **Contractor** to receive electronic funds transfer payments through a designated financial institution or authorized payment agent. The crediting of the amount of a payment to the appropriate account on the books of a financial institution or other authorized payment agent designated by the **Contractor** shall constitute full satisfaction by the **City** for the amount of the payment under this **Contract**. The account information supplied by the **Contractor** to facilitate the electronic funds transfer shall remain confidential to the fullest extent provided by **Law**.

76.2 The **Commissioner** may waive the application of the requirements of this Article 76 to payments on contracts entered into pursuant to Section 315 of the **City** Charter. In addition, the Commissioner of the Department of Finance and the Comptroller may jointly issue standards pursuant to

which the **Agency** may waive the requirements of this Article 76 for payment in the following circumstances: (i) for individuals or classes of individuals for whom compliance imposes a hardship; (ii) for classifications or types of checks; or (iii) in other circumstances as may be necessary in the interest of the **City**.

ARTICLE 77. RECORDS RETENTION

77.1 The **Contractor** agrees to retain all books, records, and other documents relevant to this **Contract** for six years after the final payment or termination of this **Contract**, whichever is later. **City**, state, and federal auditors and any other persons duly authorized by the **City** shall have full access to and the right to examine any such books, records, and other documents during the retention period.

ARTICLE 78. PARTICIPATION BY MINORITY-OWNED AND WOMEN-OWNED BUSINESS ENTERPRISES IN CITY PROCUREMENT

NOTICE TO ALL PROSPECTIVE CONTRACTORS

ARTICLE I. M/WBE PROGRAM

Local Law No. 129 of 2005 added and Local Law 1 of 2013 amended Section 6-129 of the Administrative Code of the City of New York (hereinafter "Section 6-129"). Section 6-129 establishes the program for participation in City procurement ("M/WBE Program") by minority- owned business enterprises ("MBEs") and women-owned business enterprises ("WBEs"), certified in accordance with Section 1304 of the New York City Charter. As stated in Section 6-129, the intent of the program is to address the impact of discrimination on the City's procurement process, and to promote the public interest in avoiding fraud and favoritism in the procurement process, increasing competition for City business, and lowering contract costs. The contract provisions contained herein are pursuant to Section 6-129, and the rules of the Department of Small Business Services ("DSBS") promulgated thereunder.

If this Contract is subject to the M/WBE Program established by Section 6-129, the specific requirements of MBE and/or WBE participation for this Contract are set forth in Schedule B of the Contract (entitled the "M/WBE Utilization Plan"), and are detailed below. The Contractor must comply with all applicable MBE and WBE requirements for this Contract.

All provisions of Section 6-129 are hereby incorporated in the Contract by reference and all terms used herein that are not defined herein shall have the meanings given such terms in Section 6-129. Article I, Part A, below, sets forth provisions related to the participation goals for construction, standard and professional services contracts. Article I, Part B, below, sets forth miscellaneous provisions related to the M/WBE Program.

PART A

PARTICIPATION GOALS FOR CONSTRUCTION, STANDARD AND PROFESSIONAL SERVICES CONTRACTS OR TASK ORDERS

1. The **MBE and/or WBE Participation Goals** established for this Contract or Task Orders issued pursuant to this Contract, ("**Participation Goals**"), as applicable, are set forth on Schedule B, Part I to this Contract (see Page 1, line 1 Total Participation Goals) or will be set forth on Schedule B, Part I to Task Orders issued pursuant to this Contract, as applicable.

The **Participation Goals** represent a percentage of the total dollar value of the Contract or Task Order, as applicable, that may be achieved by awarding subcontracts to firms certified with New York City Department of Small Business Services as MBEs and/or WBEs, and/or by crediting the participation of prime contractors and/or qualified joint ventures as provided in Section 3 below, unless the goals have been waived or modified by Agency in accordance with Section 6-129 and Part A, Sections 10 and 11 below, respectively.

2. If **Participation Goals** have been established for this Contract or Task Orders issued pursuant to this Contract, Contractor agrees or shall agree as a material term of the Contract that Contractor shall be subject to the **Participation Goals**, unless the goals are waived or modified by Agency in accordance with Section 6-129 and Part A, Sections 10 and 11 below, respectively.

3. If **Participation Goals** have been established for this Contract or Task Order issued pursuant to this Contract, a Contractor that is an MBE and/or WBE shall be permitted to count its own participation toward fulfillment of the relevant **Participation Goal**, provided that in accordance with Section 6-129 the value of Contractor's participation shall be determined by subtracting from the total value of the Contract or Task Order, as applicable, any amounts that the Contractor pays to direct subcontractors (as defined in Section 6-129(c)(13)), and provided further that a Contractor that is certified as both an MBE and a WBE may count its own participation either toward the goal for MBEs or the goal for WBEs, but not both.

A Contractor that is a qualified joint venture (as defined in Section 6-129(c)(30)) shall be permitted to count a percentage of its own participation toward fulfillment of the relevant **Participation Goal**. In accordance with Section 6-129, the value of Contractor's participation shall be determined by subtracting from the total value of the Contract or Task Order, as applicable, any amounts that Contractor pays to direct subcontractors, and then multiplying the remainder by the percentage to be applied to total profit to determine the amount to which an MBE or WBE is entitled pursuant to the joint venture agreement, provided that where a participant in a joint venture is certified as both an MBE and a WBE, such amount shall be counted either toward the goal for MBEs or the goal for WBEs, but not both.

4. A. If **Participation Goals** have been established for this Contract, a prospective contractor shall be required to submit with its bid or proposal, as applicable, a completed Schedule B, M/WBE Utilization Plan, Part II (see Pages 2-4) indicating: (a) whether the contractor is an MBE or WBE, or qualified joint venture; (b) the percentage of work it intends to award to direct subcontractors; and (c) in cases where the contractor intends to award direct subcontracts, a description of the type and dollar value of work designated for participation by MBEs and/or WBEs, and the time frames in which such work is scheduled to begin and end. In the event that this M/WBE Utilization Plan indicates that the bidder or proposer, as applicable, does not intend to meet the **Participation Goals**, the bid or proposal, as applicable, shall be deemed non-responsive, unless Agency has granted the bidder or proposer, as applicable, a pre- award waiver of the Participation Goals in accordance with Section 6-129 and Part A, Section 10 below.

B. (i) If this Contract is for a master services agreement or other requirements type contract that will result in the issuance of Task Orders that will be individually registered ("Master Services Agreement") and is subject to M/WBE **Participation Goals**, a prospective contractor shall be required to submit with its bid or proposal, as applicable, a completed Schedule B, M/WBE Participation Requirements for Master Services Agreements That Will Require Individually Registered Task Orders, Part II (page 2) indicating the prospective contractor's certification and required affirmations to make all reasonable good faith efforts to meet participation goals established on each individual Task Order issued pursuant to this Contract, or if a partial waiver is obtained or such goals are modified by the Agency, to meet the modified **Participation Goals** by soliciting and obtaining the participation of certified MBE and/or WBE firms. In the event that the Schedule B indicates that the bidder or proposer, as applicable, does not intend to meet the **Participation Goals** that may be established on Task Orders issued pursuant to this Contract, the bid or proposal, as applicable, shall be deemed nonresponsive.

(ii) **Participation Goals** on a Master Services Agreement will be established for individual Task Orders issued after the Master Services Agreement is awarded. If **Participation Goals** have been established on a Task Order, a contractor shall be required to submit a Schedule B – M/WBE Utilization Plan For Independently Registered Task Orders That Are Issued Pursuant to Master Services Agreements, Part II (see Pages 2-4) indicating: (a) whether the contractor is an MBE or WBE, or qualified joint venture; (b) the percentage of work it intends to award to direct subcontractors; and (c) in cases where the contractor intends to award direct subcontracts, a description of the type and dollar value of work designated for participation by MBEs and/or WBEs, and the time frames in which such work is scheduled to begin and end. The contractor must engage in good faith efforts to meet the **Participation Goals** as established for the Task Order unless Agency has granted the contractor a pre-award waiver of the Participation Goals in accordance with Section 6-129 and Part A, Section 10 below.

C. THE BIDDER/PROPOSER MUST COMPLETE THE SCHEDULE B INCLUDED HEREIN (SCHEDULE B, PART II). A SCHEDULE B SUBMITTED BY THE BIDDER/PROPOSER WHICH DOES NOT INCLUDE THE VENDOR CERTIFICATION AND REQUIRED AFFIRMATIONS (SEE SECTION V OF PART II) WILL BE DEEMED TO BE NON-RESPONSIVE, UNLESS A FULL WAIVER OF THE PARTICIPATION GOALS IS GRANTED (SCHEDULE B, PART III). IN THE EVENT THAT THE CITY DETERMINES THAT THE BIDDER/PROPOSER HAS SUBMITTED A SCHEDULE B WHERE THE VENDOR CERTIFICATION AND REQUIRED AFFIRMATIONS ARE COMPLETED BUT OTHER ASPECTS OF THE SCHEDULE B ARE NOT COMPLETE, OR CONTAIN A COPY OR COMPUTATION ERROR THAT IS AT ODDS WITH THE VENDOR CERTIFICATION AND AFFIRMATIONS, THE BIDDER/PROPOSER WILL BE NOTIFIED BY THE AGENCY AND WILL BE GIVEN FOUR (4) CALENDAR DAYS FROM RECEIPT OF NOTIFICATION TO CURE THE SPECIFIED DEFICIENCIES AND RETURN A COMPLETED SCHEDULE B TO THE AGENCY. FAILURE TO DO SO WILL RESULT IN A DETERMINATION THAT THE BID/PROPOSAL IS NON-RESPONSIVE. RECEIPT OF NOTIFICATION IS DEFINED AS THE DATE NOTICE IS E-MAILED OR FAXED (IF THE BIDDER/PROPOSER HAS PROVIDED AN E-MAIL ADDRESS OR FAX NUMBER), OR NO LATER THAN FIVE (5) CALENDAR DAYS FROM THE DATE OF MAILING OR UPON DELIVERY, IF DELIVERED.

5. Where an **M/WBE** Utilization Plan has been submitted, the Contractor shall, within 30 days of issuance by Agency of a notice to proceed, submit a list of proposed persons or entities to which it intends to award subcontracts within the subsequent 12 months. In the case of multiyear contracts, such list shall also be submitted every year thereafter. The Agency may also require the Contractor to report periodically about the contracts awarded by its direct subcontractors to indirect subcontractors (as defined in Section 6-129(c)(22)). **PLEASE NOTE: If this Contract is a public works project subject to GML §101(5) (i.e., a contract valued at or below $3M for projects in New York City) or if the Contract is subject to a project labor agreement in accordance with Labor Law §222, and the bidder is required to identify at the time of bid submission its intended subcontractors for the Wicks trades (plumbing and gas fitting; steam heating, hot water heating, ventilating and air conditioning (HVAC); and electric wiring), the Contractor must identify all those to which it intends to award construction subcontracts for any portion of the Wicks trade work at the time of bid submission, regardless of what point in the life of the contract such subcontracts will occur. In identifying intended subcontractors in the bid submission, bidders may satisfy any Participation Goals established for this Contract by proposing one or more subcontractors that are MBEs and/or WBEs for any portion of the Wicks trade work.** In the event that the Contractor's selection of a subcontractor is disapproved, the Contractor shall have a reasonable time to propose alternate subcontractors.

6. MBE and WBE firms must be certified by DSBS in order for the Contractor to credit such firms' participation toward the attainment of the **Participation Goals**. Such certification must occur prior to the

firms' commencement of work. A list of MBE and WBE firms may be obtained from the DSBS website at www.nyc.gov/buycertified, by emailing DSBS at buyer@sbs.nyc.gov, by calling (212) 513-6356, or by visiting or writing DSBS at 110 William St., New York, New York, 10038, 7th floor. Eligible firms that have not yet been certified may contact DSBS in order to seek certification by visiting www.nyc.gov/getcertified, emailing MWBE@sbs.nyc.gov, or calling the DSBS certification helpline at (212) 513-6311. A firm that is certified as both an MBE and a WBE may be counted either toward the goal for MBEs or the goal for WBEs, but not both. No credit shall be given for participation by a graduate MBE or graduate WBE, as defined in Section 6-129(c)(20).

7. Where an **M/WBE** Utilization Plan has been submitted, the Contractor shall, with each voucher for payment, and/or periodically as Agency may require, submit statements, certified under penalty of perjury, which shall include, but not be limited to,: the total amount the Contractor paid to its direct subcontractors, and, where applicable pursuant to Section 6-129(j), the total amount direct subcontractors paid to indirect subcontractors; the names, addresses and contact numbers of each MBE or WBE hired as a subcontractor by the Contractor, and, where applicable, hired by any of the Contractor's direct subcontractors; and the dates and amounts paid to each MBE or WBE. The Contractor shall also submit, along with its voucher for final payment: the total amount it paid to subcontractors, and, where applicable pursuant to Section 6-129(j), the total amount its direct subcontractors paid directly to their indirect subcontractors; and a final list, certified under penalty of perjury, which shall include the name, address and contact information of each subcontractor that is an MBE or WBE, the work performed by, and the dates and amounts paid to each.

8. If payments made to, or work performed by, MBEs or WBEs are less than the amount specified in the Contractor's **M/WBE** Utilization Plan, Agency shall take appropriate action, in accordance with Section 6-129 and Article II below, unless the Contractor has obtained a modification of its **M/WBE** Utilization Plan in accordance with Section 6-129 and Part A, Section 11 below.

9. Where an **M/WBE** Utilization Plan has been submitted, and the Contractor requests a change order the value of which exceeds the greater of 10 percent of the Contract or Task Order, as applicable, or $500,000, Agency shall review the scope of work for the Contract or Task Order, as applicable, and the scale and types of work involved in the change order, and determine whether the **Participation Goals** should be modified.

10. Pre-award waiver of the **Participation Goals**. (a) A bidder or proposer, or contractor with respect to a Task Order, may seek a pre-award full or partial waiver of the **Participation Goals** in accordance with Section 6-129, which requests that Agency change one or more **Participation Goals** on the grounds that the **Participation Goals** are unreasonable in light of the availability of certified firms to perform the services required, or by demonstrating that it has legitimate business reasons for proposing a lower level of subcontracting in its M/WBE Utilization Plan.

(b) To apply for a full or partial waiver of the **Participation Goals**, a bidder, proposer, or contractor, as applicable, must complete Part III (Page 5) of Schedule B and submit such request no later than seven (7) calendar days prior to the date and time the bids, proposals, or Task Orders are due, in writing to the Agency by email at poped@ddc.nyc.gov or via facsimile at (718) 391-1886. Bidders, proposers, or contractors, as applicable, who have submitted requests will receive an Agency response by no later than two (2) calendar days prior to the due date for bids, proposals, or Task Orders; provided, however, that if that date would fall on a weekend or holiday, an Agency response will be provided by close-of-business on the business day before such weekend or holiday date.

(c) If the Agency determines that the **Participation Goals** are unreasonable in light of the availability of certified firms to perform the services required, it shall revise the solicitation and extend the deadline for bids and proposals, or revise the Task Order, as applicable.

(d) Agency may grant a full or partial waiver of the **Participation Goals** to a bidder, proposer or contractor, as applicable, who demonstrates—before submission of the bid, proposal or Task Order, as applicable—that it has legitimate business reasons for proposing the level of subcontracting in its **M/WBE** Utilization Plan. In making its determination, Agency shall consider factors that shall include, but not be limited to, whether the bidder, proposer or contractor, as applicable, has the capacity and the bona fide intention to perform the Contract without any subcontracting, or to perform the Contract without awarding the amount of subcontracts represented by the **Participation Goals**. In making such determination, Agency may consider whether the **M/WBE** Utilization Plan is consistent with past subcontracting practices of the bidder, proposer or contractor, as applicable, whether the bidder, proposer or contractor, as applicable, has made efforts to form a joint venture with a certified firm, and whether the bidder, proposer, or contractor, as applicable, has made good faith efforts to identify other portions of the Contract that it intends to subcontract.

11. Modification of **M/WBE** Utilization Plan. (a) A Contractor may request a modification of its **M/WBE** Utilization Plan after award of this Contract. **PLEASE NOTE: If this Contract is a public works project subject to GML §101(5) (i.e., a contract valued at or below $3M for projects in New York City) or if the Contract is subject to a project labor agreement in accordance with Labor Law §222, and the bidder is required to identify at the time of bid submission its intended subcontractors for the Wicks trades (plumbing and gas fitting; steam heating, hot water heating, ventilating and air conditioning (HVAC); and electric wiring), the Contractor may request a Modification of its M/WBE Utilization Plan as part of its bid submission.** The Agency may grant a request for Modification of a Contractor's **M/WBE** Utilization Plan if it determines that the Contractor has established, with appropriate documentary and other evidence, that it made reasonable, good faith efforts to meet the **Participation Goals.** In making such determination, Agency shall consider evidence of the following efforts, as applicable, along with any other relevant factors:

(i) The Contractor advertised opportunities to participate in the Contract, where appropriate, in general circulation media, trade and professional association publications and small business media, and publications of minority and women's business organizations;
(ii) The Contractor provided notice of specific opportunities to participate in the Contract, in a timely manner, to minority and women's business organizations;
(iii) The Contractor sent written notices, by certified mail or facsimile, in a timely manner, to advise MBEs or WBEs that their interest in the Contract was solicited;
(iv) The Contractor made efforts to identify portions of the work that could be substituted for portions originally designated for participation by MBEs and/or WBEs in the M/WBE Utilization Plan, and for which the Contractor claims an inability to retain MBEs or WBEs;
(v) The Contractor held meetings with MBEs and/or WBEs prior to the date their bids or proposals were due, for the purpose of explaining in detail the scope and requirements of the work for which their bids or proposals were solicited;
(vi) The Contractor made efforts to negotiate with MBEs and/or WBEs as relevant to perform specific subcontracts, or act as suppliers or service providers;
(vii) Timely written requests for assistance made by the Contractor to Agency's M/WBE liaison officer and to DSBS;
(viii) Description of how recommendations made by DSBS and Agency were acted upon and an explanation of why action upon such recommendations did not lead to the desired level of participation of MBEs and/or WBEs.

Agency's M/WBE officer shall provide written notice to the Contractor of the determination.

(b) The Agency may modify the **Participation Goals** when the scope of the work has been changed by the Agency in a manner that affects the scale and types of work that the Contractor indicated in its **M/WBE** Utilization Plan would be awarded to subcontractors.

12. If this Contract is for an indefinite quantity of construction, standard or professional services or is a requirements type contract and the Contractor has submitted an **M/WBE** Utilization Plan and has committed to subcontract work to MBEs and/or WBEs in order to meet the **Participation Goals**, the Contractor will not be deemed in violation of the M/WBE Program requirements for this Contract with regard to any work which was intended to be subcontracted to an MBE and/or WBE to the extent that the Agency has determined that such work is not needed.

13. If **Participation Goals** have been established for this Contract or a Task Order issued pursuant to this Contract, at least once annually during the term of the Contract or Task Order, as applicable, Agency shall review the Contractor's progress toward attainment of its M/WBE Utilization Plan, including but not limited to, by reviewing the percentage of work the Contractor has actually awarded to MBE and/or WBE subcontractors and the payments the Contractor made to such subcontractors.

14. If **Participation Goals** have been established for this Contract or a Task Order issued pursuant to this Contract, Agency shall evaluate and assess the Contractor's performance in meeting those goals, and such evaluation and assessment shall become part of the Contractor's overall contract performance evaluation.

PART B: MISCELLANEOUS

1. The Contractor shall take notice that, if this solicitation requires the establishment of an **M/WBE** Utilization Plan, the resulting contract may be audited by DSBS to determine compliance with Section 6-129. See §6-129(e)(10). Furthermore, such resulting contract may also be examined by the City's Comptroller to assess compliance with the **M/WBE** Utilization Plan.

2. Pursuant to DSBS rules, construction contracts that include a requirement for an **M/WBE** Utilization Plan shall not be subject to the law governing Locally Based Enterprises set forth in Section 6-108.1 of the Administrative Code of the City of New York.

3. DSBS is available to assist contractors and potential contractors in determining the availability of MBEs and/or WBEs to participate as subcontractors, and in identifying opportunities that are appropriate for participation by MBEs and/or WBEs in contracts.

4. Prospective contractors are encouraged to enter into qualified joint venture agreements with MBEs and/or WBEs as defined by Section 6-129(c)(30).

5. By submitting a bid or proposal the Contractor hereby acknowledges its understanding of the M/WBE Program requirements set forth herein and the pertinent provisions of Section 6-129, and any rules promulgated thereunder, and if awarded this Contract, the Contractor hereby agrees to comply with the M/WBE Program requirements of this Contract and pertinent provisions of Section 6-129, and any rules promulgated thereunder, all of which shall be deemed to be material terms of this Contract. The Contractor hereby agrees to make all reasonable, good faith efforts to solicit and obtain the participation of MBEs and/or WBEs to meet the required **Participation Goals**.

ARTICLE II. ENFORCEMENT

1. If Agency determines that a bidder or proposer, as applicable, has, in relation to this procurement, violated Section 6-129 or the DSBS rules promulgated pursuant to Section 6-129, Agency may disqualify such bidder or proposer, as applicable, from competing for this Contract and the Agency may revoke such bidder's or proposer's prequalification status, if applicable.

2. Whenever Agency believes that the Contractor or a subcontractor is not in compliance with Section 6-129 or the DSBS rules promulgated pursuant to Section 6-129, or any provision of this Contract that implements Section 6-129, including, but not limited to any **M/WBE** Utilization Plan, Agency shall send a written notice to the Contractor describing the alleged noncompliance and offering the Contractor an opportunity to be heard. Agency shall then conduct an investigation to determine whether such Contractor or subcontractor is in compliance.

3. In the event that the Contractor has been found to have violated Section 6-129, the DSBS rules promulgated pursuant to Section 6-129, or any provision of this Contract that implements Section 6-129, including, but not limited to, any **M/WBE** Utilization Plan, Agency may determine that one of the following actions should be taken:

(a) entering into an agreement with the Contractor allowing the Contractor to cure the violation;
(b) revoking the Contractor's pre-qualification to bid or make proposals for future contracts;
(c) making a finding that the Contractor is in default of the Contract;
(d) terminating the Contract;
(e) declaring the Contractor to be in breach of Contract;
(f) withholding payment or reimbursement;
(g) determining not to renew the Contract;
(h) assessing actual and consequential damages;
(i) assessing liquidated damages or reducing fees, provided that liquidated damages may be based on amounts representing costs of delays in carrying out the purposes of the M/WBE Program, or in meeting the purposes of the Contract, the costs of meeting utilization goals through additional procurements, the administrative costs of investigation and enforcement, or other factors set forth in the Contract;
(j) exercising rights under the Contract to procure goods, services or construction from another contractor and charge the cost of such contract to the Contractor that has been found to be in noncompliance; or
(k) taking any other appropriate remedy.

4. If an **M/WBE** Utilization Plan has been submitted, and pursuant to this Article II, Section 3, the Contractor has been found to have failed to fulfill its **Participation Goals** contained in its **M/WBE** Utilization Plan or the **Participation Goals** as modified by Agency pursuant to Article I, Part A, Section 11, Agency may assess liquidated damages in the amount of ten percent (10%) of the difference between the dollar amount of work required to be awarded to MBE and/or WBE firms to meet the **Participation Goals** and the dollar amount the Contractor actually awarded and paid, and/or credited, to MBE and/or WBE firms. In view of the difficulty of accurately ascertaining the loss which the City will suffer by reason of Contractor's failure to meet the **Participation Goals**, the foregoing amount is hereby fixed and agreed as the liquidated damages that the City will suffer by reason of such failure, and not as a penalty. Agency may deduct and retain out of any monies which may become due under this Contract the amount of any such liquidated damages; and in case the amount which may become due under this Contract shall be less than the amount of liquidated damages suffered by the City, the Contractor shall be liable to pay the difference.

5. Whenever Agency has reason to believe that an MBE and/or WBE is not qualified for certification, or is participating in a contract in a manner that does not serve a commercially useful function (as defined in Section 6-129(c)(8)), or has violated any provision of Section 6- 129, Agency shall notify the Commissioner of DSBS who shall determine whether the certification of such business enterprise should be revoked.

6. Statements made in any instrument submitted to Agency pursuant to Section 6-129 shall be submitted under penalty of perjury and any false or misleading statement or omission shall be grounds for the application of any applicable criminal and/or civil penalties for perjury. The making of a false or fraudulent statement by an MBE and/or WBE in any instrument submitted pursuant to Section 6-129 shall, in addition, be grounds for revocation of its certification.

7. The Contractor's record in implementing its **M/WBE** Utilization Plan shall be a factor in the evaluation of its performance. Whenever Agency determines that a Contractor's compliance with an **M/WBE** Utilization Plan has been unsatisfactory, Agency shall, after consultation with the City Chief Procurement Officer, file an advice of caution form for inclusion in VENDEX as caution data.

Deputy

IN WITNESS WHEREOF, the Commissioner, on behalf of the City of New York, and the Contractor, have executed this agreement in quadruplicate, two parts of which are to remain with the Commissioner, another to be filed with the Comptroller of the City, and the fourth to be delivered to the Contractor.

THE CITY OF NEW YORK

By:_____
Deputy Commissioner

CONTRACTOR:

By:_____
(Member of Firm or Officer of Corporation)

Title: President

(Where Contractor is a Corporation, add):
Attest:

_____
Secretary

(Seal)

_____

ACKNOWLEDGEMENT OF PRINCIPAL, IF A CORPORATION

State of New York County of Queens ss:

On this 8TH day of April, 2016, before me personally came Michael A Capasso to me known who, being by me duly sworn did depose and say that he resides at 45 E 72nd St NY CNY 10022 that he is the President of the corporation described in and which executed the foregoing instrument; that he knows the seal of said corporation; that one of the seals affixed to said instrument is such seal; that it was so affixed by order of the directors of said corporation, and that he signed his name thereto by like order.

DIANE C. DERIN
Notary Public, State of New York
No. 01DE5048152
Qualified in Queens County
Commission Expires August 14, 2017

Notary Public or Commissioner of Deeds

ACKNOWLEDGEMENT OF PRINCIPAL, IF A PARTNERSHIP

State of _____ County of _____ ss:

On this _____ day of _____, _____, before me personally appeared _____ to me known, and known to me to be one of the members of the firm of _____ described in and who executed the foregoing instrument; and he acknowledged to me that he executed the same as and for the act and deed of said firm.

_____
Notary Public or Commissioner of Deeds

ACKNOWLEDGEMENT OF PRINCIPAL, IF AN INDIVIDUAL

State of _____ County of _____ ss:

On this _____ day of _____, _____, before me personally appeared _____ to me known, and known to me to be the person described in and who executed the foregoing instrument; and acknowledged that he executed the same.

_____
Notary Public or Commissioner of Deeds

ACKNOWLEDGEMENT BY COMMISSIONER

State of New York County of Queens ss:

On this 12 day of April, 2016 before me personally came Eric Macfarlane to me known, and known to be the Deputy Commissioner of the Department of Design and Construction of The City of New York, the person described as such in and who as such executed the foregoing instrument and acknowledged to me that he executed the same as Deputy Commissioner for the purposes therein mentioned.

Notary Public or Commissioner of Deeds

VICTORIA AYO-VAUGHAN
Notary Public, State of New York
Registration #01AY5014042
Qualified in Queens County
Commission Expires July 15, 2019

AUTHORITY

MAYOR'S CERTIFICATE NO. CBX DATED
BUDGET DIRECTOR'S CERTIFICATE NO. DATED

APPROPRIATION
COMMISSIONER'S CERTIFICATE

In conformity with the provisions of Section 6-101 of the Administrative Code of the City of New York, it is hereby certified that the estimated cost of the work, materials and supplies required by the within Contract, amounting to

Nine Million, Six hundred seventy-one thousand and Sixty-two dollars 14/100

Dollars ($ 9,671,062.14)

is chargeable to the fund of the Department of Design and Construction entitled Code

Various Codes

Department of Design and Construction

I hereby certify that the specifications contained herein comply with the terms and conditions of the BUDGET.

Deputy Commissioner

COMPTROLLER'S CERTIFICATE

The City of New York

Pursuant to the provisions of Section 6-101 of the Administrative Code of the City of New York, I hereby certify that there remains unapplied and unexpended a balance of the above mentioned fund applicable to this Contract sufficient to pay the estimated expense of executing the same viz:

$

Comptroller

Performance Bond #2 (Pages 96 to 99): Use if the total contract price is more than $5 Million.

PERFORMANCE BOND #2

KNOW ALL PERSONS BY THESE PRESENTS:,
That we, _____

C.A.C. Industries, Inc., 54-08 Vernon Boulevard, Long Island City, NY 11101

hereinafter referred to as the "Principal,"
and, _____

Federal Insurance Company, 15 Mountain View Road, Warren, NJ 07069

hereinafter referred to as the "Surety" ("Sureties") are held and firmly bound to THE CITY OF NEW YORK, hereinafter referred to as the "City" or to its successors and assigns in the penal sum
of _____

Nine Million Six Hundred Seventy One Thousand Sixty Two and 14/100

($ 9,671,062.14) Dollars, lawful money of the United States for the payment of which said sum of money well and truly to be made, we, and each of us, bind ourselves, our heirs, executors, administrators, successors and assigns, jointly and severally, firmly by these presents.

WHEREAS, the Principal is about to enter, or has entered, into a Contract in writing with the City for

QED1007 - Construction of Trunk & Distribution Water Mains in Arvene Blvd. between Beach 59th Street & Beach 54th Street,

Borough of Queens, City of New York

a copy of which Contract is annexed to and hereby made a part of this bond as though herein set forth in full;

NOW, THEREFORE, the conditions of this obligation are such that if the Principal, his or its representatives or assigns, shall well and faithfully perform the said Contract and all modifications, amendments, additions and alterations thereto that may hereafter be made, according to its terms and its true intent and meaning, including repair and or replacement of defective work and guarantees of maintenance for the periods stated in the Contract, and shall fully indemnify and save harmless the City from all cost and damage which it may suffer by reason of the Principal's default of the Contract, and shall fully reimburse and repay the City for all outlay and expense which the City may incur in making

Performance Bond #2 (Pages 96 to 99): Use if the total contract price is more than $5 Million.

good any such default and shall protect the said City of New York against, and pay any and all amounts, damages, cost and judgments which may or shall be recovered against said City or its officers or agents or which the said City of New York may be called upon to pay any person or corporation by reason of any damages arising or growing out of the Principal's default of the Contract, then this obligation shall be null and void, otherwise to remain in full force and effect.

The Surety (Sureties), for value received, hereby stipulates and agrees, upon written notice from the City that the City has determined that the Principal is in default of the Contract, to either (1) pay the full amount of the above penal sum in complete discharge and exoneration of this bond and of all the liabilities of the Surety relating to this bond, or (2) fully perform and complete the Work to be performed under the Contract, pursuant to the terms, conditions, and covenants thereof. The Surety (Sureties) further agrees, at its option, either to tender the penal sum or to commence and diligently perform the Work specified in the Contract, including physical site work, within twenty-five (25) business days after written notice thereof from the City and to complete all Work within the time set forth in the Contract or such other time as agreed to between the City and Surety in accordance with the Contract. The Surety and the City reserve all rights and defenses each may have against the other; provided, however, that the Surety expressly agrees that its reservation of rights shall not provide a basis for non-performance of its obligation to commence and to complete all Work as provided herein.

The Surety (Sureties), for value received, for itself and its successors and assigns, hereby stipulates and agrees that the obligation of said Surety (Sureties) and its bond shall be in no way impaired or affected by any extension of time, modification, omission, addition, or change in or to the said Contract or the Work to be performed thereunder, or by any payment thereunder before the time required therein, or by any waiver of any provisions thereof, or by any assignment, subletting or other transfer thereof or of any Work to be performed or any moneys due or to become due thereunder; and said Surety (Sureties) does hereby waive notice of any and all of such extensions, modifications, omissions, additions, changes, payments, waivers, assignments, subcontracts and transfers, and hereby expressly stipulates and agrees that any and all things done and omitted to be done by and in relation to assignees, subcontractors, and other transferees shall have the same effect as to said Surety (Sureties) as though done or omitted to be done by or in relation to said Principal.

Performance Bond #2 (Pages 96 to 99): Use if the total contract price is more than $5 Million.

IN WITNESS WHEREOF, The Principal and the Surety (Sureties) have hereunto set their hands and seals, and such of them as are corporations have caused their corporate seals to be hereunto affixed and these presents to be signed by their proper officers, this

4th day of April 20 16 .

(Seal)

C.A.C. Industries, Inc. (L.S.)
Principal

By: _____

(Seal)

Surety
Federal Insurance Company

By: _____
Susan Lupski, Attorney-In-Fact

(Seal) Surety

By: _____

(Seal) Surety

By: _____

(Seal) Surety

By: _____

(Seal) Surety

By: _____

Bond Premium Rate $8.05/M Sliding Scale

Bond Premium Cost $66,211.00

If the Contractor (Principal) is a partnership, the bond should be signed by each of the individuals who are partners.

If the Contractor (Principal) is a corporation, the bond should be signed in its correct corporate name by a duly authorized officer, agent, or attorney-in-fact.

There should be executed an appropriate number of counterparts of the bond corresponding to the number of counterparts of the Contract.

Performance Bond #2 (Pages 96 to 99): Use if the total contract price is more than $5 Million.

ACKNOWLEDGMENT OF PRINCIPAL IF A CORPORATION

State of New York County of Queens ss:

On this 5th day of April, 20 16 before me personally came Michael A Cignarella
to me known, who, being by me duly sworn did depose and say that he resides at 45E 72nd St NY, NY 10022 ; that he/she is the Pres. Secy
of the corporation described in and which executed the foregoing instrument; that he/she signed his/her name to the foregoing instrument by order of the directors of said corporation as the duly authorized and binding act thereof.

Notary Public or Commissioner of Deeds.

DIANE C. DERIN
Notary Public, State of New York
No. 01DE5048152
Qualified in Queens County
Commission Expires August 14, 2017

ACKNOWLEDGMENT OF PRINCIPAL IF A PARTNERSHIP

State of _____ County of _____ ss:

On this _____ day of _____, 20 _____ before me personally came _____,
to me known, who, being by me duly sworn did depose and say that he/she resides at_____

_____; that he/she is _____ partner of _____, a limited/general partnership existing under the laws of the State of _____, the partnership described in and which executed the foregoing instrument; and that he/she signed his/her name to the foregoing instrument as the duly authorized and binding act of said partnership.

_____
Notary Public or Commissioner of Deeds

ACKNOWLEDGMENT OF PRINCIPAL IF AN INDIVIDUAL

State of _____ County of _____ ss:

On this _____ day of _____, 20_____ before me personally came _____,
to me known, who, being by me duly sworn did depose and say that he/she resides at_____

_____, and that he/she is the individual whose name is subscribed to the within instrument and acknowledged to me that by his/her signature on the instrument, said individual executed the instrument.

_____
Notary Public or Commissioner of Deeds

Each executed bond should be accompanied by: (a) appropriate acknowledgments of the respective parties; (b) appropriate duly certified copy of Power of Attorney or other certificate of authority where bond is executed by agent, officer or other representative of Principal or Surety; (c) a duly certified extract from By-Laws or resolutions of Surety under which Power of Attorney or other certificate of authority of its agent, officer or representative was issued, and (d) certified copy of latest published financial statement of assets and liabilities of Surety.

* * * * * * * *

Affix Acknowledgments and Justification of Sureties.

Chubb Surety

POWER OF ATTORNEY

Federal Insurance Company
Vigilant Insurance Company
Pacific Indemnity Company

Attn: Surety Department
15 Mountain View Road
Warren, NJ 07059

Know All by These Presents, That **FEDERAL INSURANCE COMPANY**, an Indiana corporation, **VIGILANT INSURANCE COMPANY**, a New York corporation, and **PACIFIC INDEMNITY COMPANY**, a Wisconsin corporation, do each hereby constitute and appoint Thomas Bean, George O. Brewster, Desiree Cardlin, Colette R. Chisholm, Susan Lupski, Gerard S. Macholz, Camille Maitland, Robert T. Pearson, Nelly Renchiwich, Rita Sagistano, Vincent Walsh and Mia Woo-Warren of Uniondale, New York ----------

each as their true and lawful Attorney- in- Fact to execute under such designation in their names and to affix their corporate seals to and deliver for and on their behalf as surety thereon or otherwise, bonds and undertakings and other writings obligatory in the nature thereof (other than bail bonds) given or executed in the course of business, and any instruments amending or altering the same, and consents to the modification or alteration of any instrument referred to in said bonds or obligations.

In Witness Whereof, said **FEDERAL INSURANCE COMPANY, VIGILANT INSURANCE COMPANY**, and **PACIFIC INDEMNITY COMPANY** have each executed and attested these presents and affixed their corporate seals on this **20th** day of **July, 2015.**

Dawn M. Chloros, Assistant Secretary

David B. Norris, Jr., Vice President

STATE OF NEW JERSEY
ss.
County of Somerset

On this **20th** day of **July, 2015** before me, a Notary Public of New Jersey, personally came Dawn M. Chloros, to me known to be Assistant Secretary of FEDERAL INSURANCE COMPANY, VIGILANT INSURANCE COMPANY, and PACIFIC INDEMNITY COMPANY, the companies which executed the foregoing Power of Attorney, and the said Dawn M. Chloros, being by me duly sworn, did depose and say that she is Assistant Secretary of FEDERAL INSURANCE COMPANY, VIGILANT INSURANCE COMPANY, and PACIFIC INDEMNITY COMPANY and knows the corporate seals thereof, that the seals affixed to the foregoing Power of Attorney are such corporate seals and were thereto affixed by authority of the By- Laws of said Companies; and that she signed said Power of Attorney as Assistant Secretary of said Companies by like authority; and that she is acquainted with David B. Norris, Jr., and knows him to be Vice President of said Companies; and that the signature of David B. Norris, Jr., subscribed to said Power of Attorney is in the genuine handwriting of David B. Norris, Jr., and was thereto subscribed by authority of said By- Laws and in deponent's presence.

Notarial Seal

KATHERINE J. ADELAAR
NOTARY PUBLIC OF NEW JERSEY
No. 2316685
Commission Expires July 16, 2019

Notary Public

CERTIFICATION

Extract from the By- Laws of FEDERAL INSURANCE COMPANY, VIGILANT INSURANCE COMPANY, and PACIFIC INDEMNITY COMPANY:

"Except as otherwise provided in these By-Laws or by law or as otherwise directed by the Board of Directors, the President or any Vice President shall be authorized to execute and deliver, in the name and on behalf of the Corporation, all agreements, bonds, contracts, deeds, mortgages, and other instruments, either for the Corporation's own account or in a fiduciary or other capacity, and the seal of the Corporation, if appropriate, shall be affixed thereto by any of such officers or the Secretary or an Assistant Secretary. The Board of Directors, the President or any Vice President designated by the Board of Directors may authorize any other officer, employee or agent to execute and deliver, in the name and on behalf of the Corporation, agreements, bonds, contracts, deeds, mortgages, and other instruments, either for the Corporation's own account or in a fiduciary or other capacity, and, if appropriate, to affix the seal of the Corporation thereto. The grant of such authority by the Board or any such officer may be general or confined to specific instances."

I, Dawn M. Chloros, Assistant Secretary of FEDERAL INSURANCE COMPANY, VIGILANT INSURANCE COMPANY, and PACIFIC INDEMNITY COMPANY (the "Companies") do hereby certify that

(i) the foregoing extract of the By- Laws of the Companies is true and correct,
(ii) the Companies are duly licensed and authorized to transact surety business in all 50 of the United States of America and the District of Columbia and are authorized by the U.S. Treasury Department; further, Federal and Vigilant are licensed in the U.S. Virgin Islands, and Federal is licensed in Guam, Puerto Rico, and each of the Provinces of Canada except Prince Edward Island; and
(iii) the foregoing Power of Attorney is true, correct and in full force and effect.

Given under my hand and seals of said Companies at Warren, NJ this APR 0 4 2016

Dawn M. Chloros, Assistant Secretary

IN THE EVENT YOU WISH TO NOTIFY US OF A CLAIM, VERIFY THE AUTHENTICITY OF THIS BOND OR NOTIFY US OF ANY OTHER MATTER, PLEASE CONTACT US AT ADDRESS LISTED ABOVE, OR BY Telephone (908) 903- 3493 Fax (908) 903- 3656 e-mail: surety@chubb.com

ACKNOWLEDGMENT OF SURETY COMPANY

STATE OF ..New York.....} ss
COUNTY OF ..Nassau.....}

On this ...April 4, 2016....., before me personally came...Susan Lupski..... to me know, who, being by me duly sworn, did depose and say; that he/she resides in .....Nassau County..., State of..New York....., that he/she is the Attorney-In-Fact of the Federal Insurance Company.....the corporation described in which executed the above instrument; that he/she knows the seal of said corporation; that the seal affixed to said instrument is such corporate seal; that is was so affixed by order of the Board of Directors of said corporation; and that he/she signed his/her name thereto by like order; and the affiant did further depose and say that the Superintendent of Insurance of the State of New York, has, pursuant to Section 1111 of the Insurance Law of the State of New York, issued to...Federal Insurance Company.....(Surety) his/her certificate of qualification evidencing the qualification of said Company and its sufficiency under any law of the State of New York as surety and guarantor, and the propriety of accepting and approving it as such; and that such certificate has not been revoked.

.....
Notary Public

LAURAJEAN MURTAGH
Notary Public, State of New York
No. 01MU6319758
Qualified in Nassau County
Commission Expires 02/23/2019

NY acknowledgment

FEDERAL INSURANCE COMPANY

STATEMENT OF ASSETS, LIABILITIES AND SURPLUS TO POLICYHOLDERS

Statutory Basis

DECEMBER 31, 2014

(in thousands of dollars)

ASSETS		*LIABILITIES AND SURPLUS TO POLICYHOLDERS*	
Cash and Short Term Investments	$ 110,484	Outstanding Losses and Loss Expenses	$ 12,181,139
United States Government, State and Municipal Bonds	10,245,402	Unearned Premiums	3,654,861
Other Bonds	4,927,443	Ceded Reinsurance Premiums Payable	339,466
Stocks	1,066,355	Provision for Reinsurance	46,470
Other Invested Assets	1,365,367	Other Liabilities	1,434,018
TOTAL INVESTMENTS	17,715,051	TOTAL LIABILITIES	17,655,954
Investments in Affiliates:			
Chubb Investment Holdings, Inc.	3,565,038	Capital Stock	20,980
Pacific Indemnity Company	2,922,214	Paid-In Surplus	3,106,809
Executive Risk Indemnity Inc	1,258,019	Unassigned Funds	11,700,594
Chubb Insurance Investment Holdings Ltd	1,162,709		
CC Canada Holdings Ltd	652,880		
Chubb Insurance Company of Australia Ltd.	480,068	SURPLUS TO POLICYHOLDERS	14,828,383
Great Northern Insurance Company	476,969		
Vigilant Insurance Company	292,313		
Chubb European Investment Holdings SLP	287,633		
Other Affiliates	517,330		
Premiums Receivable	1,679,148		
Other Assets	1,474,965		
TOTAL ADMITTED ASSETS	$ 32,484,337	TOTAL LIABILITIES AND SURPLUS TO POLICYHOLDERS	$ 32,484,337

Investments are valued in accordance with requirements of the National Association of Insurance Commissioners. At December 31, 2014, investments with a carrying value of $518,199,884 were deposited with government authorities as required by law.

State, County & City of New York, — ss:

Yvonne Baker, Assistant Secretary of the Federal Insurance Company being duly sworn, deposes and says that the foregoing Statement of Assets, Liabilities and Surplus to Policyholders of said Federal Insurance Company on December 31, 2014 is true and correct and is a true abstract of the Annual Statement of said Company as filed with the Secretary of the Treasury of the United States for the 12 months ending December 31, 2014.

Subscribed and sworn to before me
this March 11, 2015.

Yvonne Baker
Assistant Secretary

Jeanette Shipsey
Notary Public

JEANETTE SHIPSEY
Notary Public, State of New York
No. 02SH5074142
Qualified in Nassau County
Commission Expires March 10, 2019

Payment Bond (Pages 100 to 103): Use for any contract for which a Payment Bond is required.

PAYMENT BOND

KNOW ALL PERSONS BY THESE PRESENTS, That we, _____

C.A.C. Industries, Inc., 54-08 Vernon Boulevard, Long Island City, NY 11101

hereinafter referred to as the "Principal", and _____

Federal Insurance Company, 15 Mountain View Road, Warren, NJ 07069

hereinafter referred to as the "Surety" ("Sureties") are held and firmly bound to THE CITY OF NEW YORK, hereinafter referred to as the "City" or to its successors and assigns, in the penal sum of

Nine Million Six Hundred Seventy One Thousand Sixty Two and 14/100

($9,671,062.14) Dollars, lawful money of the United States, for the payment of which said sum of money well and truly to be made, we, and each of us, bind ourselves, our heirs, executors, administrators, successors and assigns, jointly and severally, firmly by these presents.

WHEREAS, the Principal is about to enter, or has entered, into a Contract in writing with the City for

QED1007 Construction of Trunk & Distribution Water Mains in Arvene Blvd. between Beach 59th Street and Beach 54th Street

Borough of Queens, City of New York

a copy of which Contract is annexed to and hereby made a part of this bond as though herein set forth in full;

NOW, THEREFORE, the conditions of this obligation are such that if the Principal, his or its representatives or assigns and other Subcontractors to whom Work under this Contract is sublet and his or their successors and assigns shall promptly pay or cause to be paid all lawful claims for

(a) Wages and compensation for labor performed and services rendered by all persons engaged in the prosecution of the Work under said Contract, and any amendment or extension thereof or addition thereto, whether such persons be agents servants or employees of the Principal or any such Subcontractor, including all persons so engaged who perform the work of laborers or mechanics at or in the vicinity of the site

of the Project regardless of any contractual relationship between the Principal or such Subcontractors, or his or their successors or assigns, on the one hand and such laborers or mechanics on the other, but not including office employees not regularly stationed at the site of the project; and

(b) Materials and supplies (whether incorporated in the permanent structure or not), as well as teams, fuels, oils, implements or machinery furnished, used or consumed by said Principal or any subcontractor at or in the vicinity of the site of the Project in the prosecution of the Work under said Contract and any amendment or extension thereof or addition thereto; then this obligation shall be void, otherwise to remain in full force and effect.

This bond is subject to the following additional conditions, limitations and agreements:

(a) The Principal and Surety (Sureties) agree that this bond shall be for the benefit of any materialmen or laborer having a just claim, as well as the City itself.

(b) All persons who have performed labor, rendered services or furnished materials and supplies, as aforesaid, shall have a direct right of action against the Principal and his, its or their successors and assigns, and the Surety (Sureties) herein, or against either or both or any of them and their successors and assigns. Such persons may sue in their own name, and may prosecute the suit to judgment and execution without the necessity of joining with any other persons as party plaintiff.

(c) The Principal and Surety (Sureties) agree that neither of them will hold the City liable for any judgment for costs of otherwise, obtained by either or both of them against a laborer or materialman in a suit brought by either a laborer or materialman under this bond for moneys allegedly due for performing work or furnishing material.

(d) The Surety (Sureties) or its successors and assigns shall not be liable for any compensation recoverable by an employee or laborer under the Workmen's Compensation Law.

(e) In no event shall the Surety (Sureties), or its successors or assigns, be liable for a greater sum than the penalty of this bond or be subject to any suit, action or proceeding hereon that is instituted by any person, firm, or corporation hereunder later than two years after the complete performance of said Contract and final settlement thereof.

The Principal, for himself and his successors and assigns, and the Surety (Sureties), for itself and its successors and assigns, do hereby expressly waive any objection that might be interposed as to the right of the City to require a bond containing the foregoing provisions, and they do hereby further expressly waive any defense which they or either of them might interpose to an action brought hereon by any person, firm or corporation, including subcontractors, materialmen and third persons, for work, labor, services, supplies or material performed rendered, or furnished as aforesaid upon the ground that there is no law authorizing the City to require the foregoing provisions to be place in this bond.

And the Surety (Sureties), for value received, for itself and its successors and assigns, hereby stipulates and agrees that the obligation of said Surety (Sureties), and its bonds shall be in no way impaired or affected by any extension of time, modification, omission, addition, or change in or of the said Contract or the work to be performed thereunder, or by any payment thereunder before the time required therein, or by any waiver of any provisions thereof, or by any assignment, subletting or other transfer thereof or of any part thereof, or of any Work to be performed, or any moneys due to become due thereunder and said Surety (Sureties) does hereby waive notice of any and all of such extensions, modifications, omissions, additions, changes, payments, waivers, assignments, subcontracts and transfers, and hereby expressly stipulates and agrees that any and all things done and omitted to be done by and in relation to assignees, Subcontractors, and other transferees shall have the same effect as to said Surety (Sureties) as though done or omitted to be done or in relation to said Principal.

Payment Bond (Pages 100 to 103): Use for any contract for which a Payment Bond is required.

IN WITNESS WHEREOF, the Principal and the Surety (Sureties) have hereunto set their hands and seals, and such of them as are corporations have caused their corporate seals to be hereunto affixed and these presents to be signed by their proper officers, this 4th day of April, 2016.

(Seal)

C.A.C. Industries, Inc. (L.S.)
Principal

By: _____

(Seal)

Federal Insurance Company
Surety

By: _____
Susan Lupski, Attorney-In-Fact

(Seal)

_____
Surety

By: _____

(Seal)

_____
Surety

By: _____

(Seal)

_____
Surety

By: _____

If the Contractor (Principal) is a partnership, the bond should be signed by each of the individuals who are partners.

If the Contractor (Principal) is a corporation, the bond should be signed in its correct corporate name by a duly authorized officer, agent, or attorney-in-fact.

There should be executed an appropriate number of counterparts of the bond corresponding to the number of counterparts of the Contract.

Payment Bond (Pages 100 to 103): Use for any contract for which a Payment Bond is required.

ACKNOWLEDGMENT OF PRINCIPAL, IF A CORPORATION

State of New York County of Queens ss:

On this 5th day of April, 2016, before me personally came Michael A Cayasso to me known, who, being by me duly sworn did depose and say that he resides at 45 E 72nd St NYC NY 10022 that he is the Pres. Seal of the corporation described in and which executed the foregoing instrument; that he knows the seal of said corporation; that one of the seals affixed to said instrument is such seal; that it was so affixed by order of the directors of said corporation, and that he signed his name thereto by like order.

DIANE C. DERIN
Notary Public, State of New York
No. 01DE5048152
Qualified in Queens County
Commission Expires August 18, 2017

Notary Public or Commissioner of Deeds

ACKNOWLEDGMENT OF PRINCIPAL, IF A PARTNERSHIP

State of _____ County of _____ ss:

On this _____ day of _____, _____, before me personally appeared _____ to me known, and known to me to be one of the members of the firm of _____ _____ described in and who executed the foregoing instrument; and he acknowledged to me that he executed the same as and for the act and deed of said firm.

_____
Notary Public or Commissioner of Deeds

ACKNOWLEDGMENT OF PRINCIPAL, IF AN INDIVIDUAL

State of _____ County of _____ ss:

On this _____ day of _____, _____, before me personally appeared _____ to me known, and known to me to be the person described in and who executed the foregoing instrument; and acknowledged that he executed the same.

_____
Notary Public or Commissioner of Deeds

Each executed bond should be accompanied by: (a) appropriate acknowledgments of the respective parties; (b) appropriate duly certified copy of Power of Attorney or other certificate of authority where bond is executed by agent, officer or other representative of Principal or Surety; (c) a duly certified extract from By-Laws or resolutions of Surety under which Power of Attorney or other certificate of authority of its agent, officer or representative was issued, and (d) certified copy of latest published financial statement of assets and liabilities of Surety.

* * * * * * * *

Affix Acknowledgments and Justification of Sureties.

Chubb Surety	POWER OF ATTORNEY	Federal Insurance Company Vigilant Insurance Company Pacific Indemnity Company	Attn: Surety Department 15 Mountain View Road Warren, NJ 07059

Know All by These Presents, That **FEDERAL INSURANCE COMPANY**, an Indiana corporation, **VIGILANT INSURANCE COMPANY**, a New York corporation, and **PACIFIC INDEMNITY COMPANY**, a Wisconsin corporation, do each hereby constitute and appoint Thomas Bean, George O. Brewster, Desiree Cardlin, Colette R. Chisholm, Susan Lupski, Gerard S. Macholz, Camille Maitland, Robert T. Pearson, Nelly Renchiwich, Rita Sagistano, Vincent Walsh and Mia Woo-Warren of Uniondale, New York ----------

each as their true and lawful Attorney- in- Fact to execute under such designation in their names and to affix their corporate seals to and deliver for and on their behalf as surety thereon or otherwise, bonds and undertakings and other writings obligatory in the nature thereof (other than bail bonds) given or executed in the course of business, and any instruments amending or altering the same, and consents to the modification or alteration of any instrument referred to in said bonds or obligations.

In Witness Whereof, said **FEDERAL INSURANCE COMPANY, VIGILANT INSURANCE COMPANY**, and **PACIFIC INDEMNITY COMPANY** have each executed and attested these presents and affixed their corporate seals on this **20th** day of **July, 2015.**

Dawn M. Chloros, Assistant Secretary

David B. Norris, Jr., Vice President

STATE OF NEW JERSEY
ss.
County of Somerset

On this **20th** day of **July, 2015** before me, a Notary Public of New Jersey, personally came Dawn M. Chloros, to me known to be Assistant Secretary of FEDERAL INSURANCE COMPANY, VIGILANT INSURANCE COMPANY, and PACIFIC INDEMNITY COMPANY, the companies which executed the foregoing Power of Attorney, and the said Dawn M. Chloros, being by me duly sworn, did depose and say that she is Assistant Secretary of FEDERAL INSURANCE COMPANY, VIGILANT INSURANCE COMPANY, and PACIFIC INDEMNITY COMPANY and knows the corporate seals thereof, that the seals affixed to the foregoing Power of Attorney are such corporate seals and were thereto affixed by authority of the By- Laws of said Companies; and that she signed said Power of Attorney as Assistant Secretary of said Companies by like authority; and that she is acquainted with David B. Norris, Jr., and knows him to be Vice President of said Companies; and that the signature of David B. Norris, Jr., subscribed to said Power of Attorney is in the genuine handwriting of David B. Norris, Jr., and was thereto subscribed by authority of said By- Laws and in deponent's presence.

Notarial Seal

KATHERINE J. ADELAAR
NOTARY PUBLIC OF NEW JERSEY
No. 2316685
Commission Expires July 16, 2019

Notary Public

CERTIFICATION

Extract from the By- Laws of FEDERAL INSURANCE COMPANY, VIGILANT INSURANCE COMPANY, and PACIFIC INDEMNITY COMPANY:

"Except as otherwise provided in these By-Laws or by law or as otherwise directed by the Board of Directors, the President or any Vice President shall be authorized to execute and deliver, in the name and on behalf of the Corporation, all agreements, bonds, contracts, deeds, mortgages, and other instruments, either for the Corporation's own account or in a fiduciary or other capacity, and the seal of the Corporation, if appropriate, shall be affixed thereto by any of such officers or the Secretary or an Assistant Secretary. The Board of Directors, the President or any Vice President designated by the Board of Directors may authorize any other officer, employee or agent to execute and deliver, in the name and on behalf of the Corporation, agreements, bonds, contracts, deeds, mortgages, and other instruments, either for the Corporation's own account or in a fiduciary or other capacity, and, if appropriate, to affix the seal of the Corporation thereto. The grant of such authority by the Board or any such officer may be general or confined to specific instances."

I, Dawn M. Chloros, Assistant Secretary of FEDERAL INSURANCE COMPANY, VIGILANT INSURANCE COMPANY, and PACIFIC INDEMNITY COMPANY (the "Companies") do hereby certify that

(i) the foregoing extract of the By- Laws of the Companies is true and correct,
(ii) the Companies are duly licensed and authorized to transact surety business in all 50 of the United States of America and the District of Columbia and are authorized by the U.S. Treasury Department; further, Federal and Vigilant are licensed in the U.S. Virgin Islands, and Federal is licensed in Guam, Puerto Rico, and each of the Provinces of Canada except Prince Edward Island; and
(iii) the foregoing Power of Attorney is true, correct and in full force and effect.

Given under my hand and seals of said Companies at Warren, NJ this APR 0 4 2016

Dawn M. Chloros, Assistant Secretary

IN THE EVENT YOU WISH TO NOTIFY US OF A CLAIM, VERIFY THE AUTHENTICITY OF THIS BOND OR NOTIFY US OF ANY OTHER MATTER, PLEASE CONTACT US AT ADDRESS LISTED ABOVE, OR BY Telephone (908) 903- 3493 Fax (908) 903- 3656 e-mail: surety@chubb.com

ACKNOWLEDGMENT OF SURETY COMPANY

STATE OF New York } ss
COUNTY OF Nassau }

On this April 4, 2016, before me personally came Susan Lupski to me know, who, being by me duly sworn, did depose and say; that he/she resides in Nassau County., State of. New York, that he/she is the Attorney-In-Fact of the Federal Insurance Company the corporation described in which executed the above instrument; that he/she knows the seal of said corporation; that the seal affixed to said instrument is such corporate seal; that is was so affixed by order of the Board of Directors of said corporation; and that he/she signed his/her name thereto by like order; and the affiant did further depose and say that the Superintendent of Insurance of the State of New York, has, pursuant to Section 1111 of the Insurance Law of the State of New York, issued to Federal Insurance Company (Surety) his/her certificate of qualification evidencing the qualification of said Company and its sufficiency under any law of the State of New York as surety and guarantor, and the propriety of accepting and approving it as such; and that such certificate has not been revoked.

Notary Public

LAURAJEAN MURTAGH
Notary Public, State of New York
No. 01MU6319758
Qualified in Nassau County
Commission Expires 02/23/2019

NY acknowledgment

FEDERAL INSURANCE COMPANY

STATEMENT OF ASSETS, LIABILITIES AND SURPLUS TO POLICYHOLDERS

Statutory Basis

DECEMBER 31, 2014

(in thousands of dollars)

ASSETS		*LIABILITIES AND SURPLUS TO POLICYHOLDERS*	
Cash and Short Term Investments	$ 110,484	Outstanding Losses and Loss Expenses	$ 12,181,139
United States Government, State and Municipal Bonds	10,245,402	Unearned Premiums	3,654,861
Other Bonds	4,927,443	Ceded Reinsurance Premiums Payable	339,466
Stocks	1,066,355	Provision for Reinsurance	46,470
Other Invested Assets	1,365,367	Other Liabilities	1,434,018
TOTAL INVESTMENTS	17,715,051	TOTAL LIABILITIES	17,655,954
Investments in Affiliates:			
Chubb Investment Holdings, Inc.	3,565,038	Capital Stock	20,980
Pacific Indemnity Company	2,922,214	Paid-In Surplus	3,106,809
Executive Risk Indemnity Inc	1,258,019	Unassigned Funds	11,700,594
Chubb Insurance Investment Holdings Ltd	1,162,709		
CC Canada Holdings Ltd	652,880		
Chubb Insurance Company of Australia Ltd.	480,068	SURPLUS TO POLICYHOLDERS	14,828,383
Great Northern Insurance Company	476,969		
Vigilant Insurance Company	292,313		
Chubb European Investment Holdings SLP	287,633		
Other Affiliates	517,330		
Premiums Receivable	1,679,148		
Other Assets	1,474,965		
TOTAL ADMITTED ASSETS	$ 32,484,337	TOTAL LIABILITIES AND SURPLUS TO POLICYHOLDERS	$ 32,484,337

Investments are valued in accordance with requirements of the National Association of Insurance Commissioners. At December 31, 2014, investments with a carrying value of $518,199,884 were deposited with government authorities as required by law.

State, County & City of New York, — ss:

Yvonne Baker, Assistant Secretary of the Federal Insurance Company being duly sworn, deposes and says that the foregoing Statement of Assets, Liabilities and Surplus to Policyholders of said Federal Insurance Company on December 31, 2014 is true and correct and is a true abstract of the Annual Statement of said Company as filed with the Secretary of the Treasury of the United States for the 12 months ending December 31, 2014.

Subscribed and sworn to before me
this March 11, 2015.

Yvonne Baker
Assistant Secretary

Jeanette Shipsey
Notary Public

JEANETTE SHIPSEY
Notary Public, State of New York
No. 02SH5074142
Qualified in Nassau County
Commission Expires March 10, 2019

Form 15-10-0313A (Rev. 3/15)

CERTIFICATE OF LIABILITY INSURANCE

DATE (MM/DD/YYYY): 04/08/2016

THIS CERTIFICATE IS ISSUED AS A MATTER OF INFORMATION ONLY AND CONFERS NO RIGHTS UPON THE CERTIFICATE HOLDER. THIS CERTIFICATE DOES NOT AFFIRMATIVELY OR NEGATIVELY AMEND, EXTEND OR ALTER THE COVERAGE AFFORDED BY THE POLICIES BELOW. THIS CERTIFICATE OF INSURANCE DOES NOT CONSTITUTE A CONTRACT BETWEEN THE ISSUING INSURER(S), AUTHORIZED REPRESENTATIVE OR PRODUCER, AND THE CERTIFICATE HOLDER.

IMPORTANT: If the certificate holder is an ADDITIONAL INSURED, the policy(ies) must be endorsed. If SUBROGATION IS WAIVED, subject to the terms and conditions of the policy, certain policies may require an endorsement. A statement on this certificate does not confer rights to the certificate holder in lieu of such endorsement(s).

PRODUCER 1-908-566-1010 Construction Risk Partners, LLC Campus View Plaza 1250 Route 28, Suite 201 Branchburg, NJ 08876	CONTACT NAME: Kimberly Bernard PHONE (A/C, No, Ext): 516-962-8170 FAX (A/C, No): 516-962-8180 E-MAIL ADDRESS: kbernard@constructionriskpartners.com
INSURED C.A.C. Industries, Inc. 54-08 Vernon Boulevard Long Island City, NY 11101	INSURER(S) AFFORDING COVERAGE / NAIC # INSURER A: TRAVELERS IND CO 25658 INSURER B: TRAVELERS PROP CAS CO OF AMER 25674 INSURER C: STARR IND & LIAB CO 38318 INSURER D: INDIAN HARBOR INS CO 36940 INSURER E: ASPEN AMER INS CO INSURER F:

COVERAGES **CERTIFICATE NUMBER:** 46550829 **REVISION NUMBER:**

THIS IS TO CERTIFY THAT THE POLICIES OF INSURANCE LISTED BELOW HAVE BEEN ISSUED TO THE INSURED NAMED ABOVE FOR THE POLICY PERIOD INDICATED. NOTWITHSTANDING ANY REQUIREMENT, TERM OR CONDITION OF ANY CONTRACT OR OTHER DOCUMENT WITH RESPECT TO WHICH THIS CERTIFICATE MAY BE ISSUED OR MAY PERTAIN, THE INSURANCE AFFORDED BY THE POLICIES DESCRIBED HEREIN IS SUBJECT TO ALL THE TERMS, EXCLUSIONS AND CONDITIONS OF SUCH POLICIES. LIMITS SHOWN MAY HAVE BEEN REDUCED BY PAID CLAIMS.

INSR LTR	TYPE OF INSURANCE	ADDL INSD	SUBR WVD	POLICY NUMBER	POLICY EFF (MM/DD/YYYY)	POLICY EXP (MM/DD/YYYY)	LIMITS	
A	X COMMERCIAL GENERAL LIABILITY CLAIMS-MADE [X] OCCUR GEN'L AGGREGATE LIMIT APPLIES PER: POLICY [X] PRO-JECT [ ] LOC OTHER:			VTC2K-CO-828K6241	06/29/15	06/29/16	EACH OCCURRENCE DAMAGE TO RENTED PREMISES (Ea occurrence) MED EXP (Any one person) PERSONAL & ADV INJURY GENERAL AGGREGATE PRODUCTS - COMP/OP AGG $	$ 1,000,000 $ 300,000 $ 10,000 $ 1,000,000 $ 2,000,000 $ 2,000,000 $
-	AUTOMOBILE LIABILITY X ANY AUTO ALL OWNED AUTOS SCHEDULED AUTOS HIRED AUTOS NON-OWNED AUTOS			VT1NK-CAP-828K6265-IND-15	06/29/15	06/29/16	COMBINED SINGLE LIMIT (Ea accident) BODILY INJURY (Per person) BODILY INJURY (Per accident) PROPERTY DAMAGE (Per accident) $	$ 1,000,000 $ $ $ $
B	X UMBRELLA LIAB X OCCUR EXCESS LIAB CLAIMS-MADE DED RETENTION $ 10,000			VTSMJ-CUP-828K6253	06/29/15	06/29/16	EACH OCCURRENCE AGGREGATE $	$ 5,000,000 $ 5,000,000 $
	WORKERS COMPENSATION AND EMPLOYERS' LIABILITY ANY PROPRIETOR/PARTNER/EXECUTIVE OFFICER/MEMBER EXCLUDED? Y/N [ ] N/A (Mandatory in NH) If yes, describe under DESCRIPTION OF OPERATIONS below						PER STATUTE OTH-ER E.L. EACH ACCIDENT E.L. DISEASE - EA EMPLOYEE E.L. DISEASE - POLICY LIMIT	 $ $ $
C	Excess Liability			1000021924	06/29/15	06/29/16	Occurrence/Agg	10M/10M
D	Professional			CPL742054001	06/29/15	06/29/16	Policy Aggregate	5,000,000
E	Property			IMAEG5Q15	06/29/15	06/29/16	Contents	40,000

DESCRIPTION OF OPERATIONS / LOCATIONS / VEHICLES (ACORD 101, Additional Remarks Schedule, may be attached if more space is required)

Re: FMS ID: QED-1007, E-Pin: 85015B0184001, DDC Pin: 8502014WM0013:C, Construction of Trunk and Distribution Water Mains in Arvene Blvd between Beach and 59th Street and Beach 54th Street/Rockaway Beach Blvd - Borough of Queens. City of New York including its officials and employees, The New York City Transit Authority (NYCTA), Manhattan and Bronx Surface Transit Operation Authority (MaBSTOA), Staten Island Rapid Transit Operation Authority (SIRTOA), Metropolitan Transportation Authority (MTA), its subsidiaries and affiliated companies and National Grid are additional insured as required by written contract.

CERTIFICATE HOLDER

New York City Department of Design and Construction

30 Thomson Avenue

Island City, NY 11101

USA

CANCELLATION

SHOULD ANY OF THE ABOVE DESCRIBED POLICIES BE CANCELLED BEFORE THE EXPIRATION DATE THEREOF, NOTICE WILL BE DELIVERED IN ACCORDANCE WITH THE POLICY PROVISIONS.

AUTHORIZED REPRESENTATIVE

Sarah Darrell

© 1988-2014 ACORD CORPORATION. All rights reserved.

The ACORD name and logo are registered marks of ACORD

CITY OF NEW YORK

CERTIFICATION BY INSURANCE BROKER OR AGENT

The undersigned insurance broker or agent represents to the City of New York that the attached Certificate of Insurance is accurate in all material respects.

Construction Risk Partners, LLC
[Name of broker or agent (typewritten)]

1250 Route 28, Suite 201, Branchburg, NJ 08876
[Address of broker or agent (typewritten)]

sklein@constructionriskpartners.com
[Email address of broker or agent (typewritten)]

908-566-1010/908-566-1020
[Phone number/Fax number of broker or agent (typewritten)]

Sarah Jarrell
[Signature of authorized official, broker, or agent]

Sarah Jarrell, Assistant Account Associate
[Name and title of authorized official, broker, or agent (typewritten)]

State of New Jersey)
) ss.:
County of Passaic)

Sworn to before me this 8th day of April 20 16

NOTARY PUBLIC FOR THE STATE OF New Jersey

GEORGE M. DECKER
NOTARY PUBLIC OF NEW JERSEY
I.D. # 2213019
My Commission Expires 2/14/2021

NYSIF® **New York State Insurance Fund**

Workers' Compensation & Disability Benefits Specialists Since 1914

199 CHURCH STREET, NEW YORK, N.Y. 10007-1100
Phone: (888) 997-3863

CERTIFICATE OF WORKERS' COMPENSATION INSURANCE

^^^^^^ 113082726
C.A.C. INDUSTRIES INC
54-08 VERNON BLVD
LONG ISLAND CITY NY 11101

POLICYHOLDER	CERTIFICATE HOLDER
C.A.C. INDUSTRIES INC 54-08 VERNON BLVD LONG ISLAND CITY NY 11101	NEW YORK CITY DEPARTMENT OF DESIGN & CONSTRUCTION 30-30 THOMSON AVENUE LONG ISLAND CITY NY 11101

POLICY NUMBER	CERTIFICATE NUMBER	PERIOD COVERED BY THIS CERTIFICATE	DATE
G1394 246-1	352806	06/29/2015 TO 06/29/2017	4/8/2016

THIS IS TO CERTIFY THAT THE POLICYHOLDER NAMED ABOVE IS INSURED WITH THE NEW YORK STATE INSURANCE FUND UNDER POLICY NO. 1394 246-1 UNTIL 06/29/2017, COVERING THE ENTIRE OBLIGATION OF THIS POLICYHOLDER FOR WORKERS' COMPENSATION UNDER THE NEW YORK WORKERS' COMPENSATION LAW WITH RESPECT TO ALL OPERATIONS IN THE STATE OF NEW YORK, EXCEPT AS INDICATED BELOW.

IF SAID POLICY IS CANCELLED, OR CHANGED PRIOR TO 06/29/2017 IN SUCH MANNER AS TO AFFECT THIS CERTIFICATE, 10 DAYS WRITTEN NOTICE OF SUCH CANCELLATION WILL BE GIVEN TO THE CERTIFICATE HOLDER ABOVE. NOTICE BY REGULAR MAIL SO ADDRESSED SHALL BE SUFFICIENT COMPLIANCE WITH THIS PROVISION. THE NEW YORK STATE INSURANCE FUND DOES NOT ASSUME ANY LIABILITY IN THE EVENT OF FAILURE TO GIVE SUCH NOTICE.

THIS POLICY DOES NOT COVER THE SOLE PROPRIETOR, PARTNERS AND/OR MEMBERS OF A LIMITED LIABILITY COMPANY.

THIS CERTIFICATE DOES NOT APPLY TO THOSE JOB SITES WHICH ARE COVERED BY OTHER INSURANCE AND ARE SPECIFICALLY EXCLUDED BY ENDORSEMENT.

THE POLICY INCLUDES A WAIVER OF SUBROGATION ENDORSEMENT UNDER WHICH NYSIF AGREES TO WAIVE ITS RIGHT OF SUBROGATION TO BRING AN ACTION AGAINST THE CERTIFICATE HOLDER TO RECOVER AMOUNTS WE PAID IN WORKERS' COMPENSATION AND/OR MEDICAL BENEFITS TO OR ON BEHALF OF AN EMPLOYEE OF OUR INSURED IN THE EVENT THAT, PRIOR TO THE DATE OF THE ACCIDENT, THE CERTIFICATE HOLDER HAS ENTERED INTO A WRITTEN CONTRACT WITH OUR INSURED THAT REQUIRES THAT SUCH RIGHT OF SUBROGATION BE WAIVED.

THIS CERTIFICATE IS ISSUED AS A MATTER OF INFORMATION ONLY AND CONFERS NO RIGHTS NOR INSURANCE COVERAGE UPON THE CERTIFICATE HOLDER. THIS CERTIFICATE DOES NOT AMEND, EXTEND OR ALTER THE COVERAGE AFFORDED BY THE POLICY.

NEW YORK STATE INSURANCE FUND

Sherwin Taylor

DIRECTOR,INSURANCE FUND UNDERWRITING

This certificate can be validated on our web site at https://www.nysif.com/cert/certval.asp or by calling (888) 875-5790
VALIDATION NUMBER: 738454020

U-26.3

STATE OF NEW YORK
WORKERS' COMPENSATION BOARD

CERTIFICATE OF INSURANCE COVERAGE UNDER THE NYS DISABILITY BENEFITS LAW

PART 1. To be completed by Disability Benefits Carrier or Licensed Insurance Agent of that Carrier

Legal Name and Address of Insured (Use street address only) C A C INDUSTRIES INC 54 08 VERNON BLVD. LONG ISLAND CITY, NY 11101 Work Location Of Insured (Only required If coverage Is specifically limited To certain locations In New York State, i.e., a Wrap-Up Policy)	1b. Business Telephone Number Of Insured (718) 729-3600 1c. NYS Unemployment Insurance Employer Registration Number of Insured 1d. Federal Employer Identification Number of Insured or Social Security Number 11-3082726
2. Name and Address of the Entity Requesting Proof of Coverage (Entity Being Listed as the Certificate Holder) New York City Department of Design & Construction 30-30 Thomson AVenue Long Island City, NY 11101	3a. Name of Insurance Carrier WESCO INSURANCE COMPANY 3b. Policy Number of entity listed in box "1a.": 0136443 3c. Policy effective period: 4/5/2016 to 12/31/2017

4. Policy covers:
a. ☒ All of the employer's employees eligible under the New York Disability Benefits Law
b. ☐ Only the following class or classes of the employer's employees:

Under penalty of perjury, I certify that I am an authorized representative or licensed agent of the insurance carrier referenced above and that the named insured has NYS Disability Benefits insurance coverage as described above.

Date Signed 4/5/2016 By Kathleen Delia

(Signature of insurance carrier's authorized representative or NYS Licensed Insurance Agent of that insurance carrier)

Telephone Number 800-535-2711 Title Vice President

IMPORTANT: If box "4a" is checked, and this form is signed by the insurance carrier's authorized representative or NYS Licensed Insurance Agent of that carrier, this certificate is COMPLETE. Mail it directly to the certificate holder.
If box "4b" is checked, this certificate is NOT COMPLETE for purposes of Section 220, Subd. 8 of the Disability Benefits Law. It must be mailed for completion to the Workers' Compensation Board, DB Plans Acceptance Unit, 328 State Street, Schenectady, NY 12305.

PART 2. To be completed by NYS Workers' Compensation Board (Only if box "4b" of Part 1 has been checked)

State of New York
Workers' Compensation Board

According to information maintained by the NYS Workers' Compensation Board, the above-named employer has complied with the NYS Disability Benefits Law with respect to all of his/her employees.

Date Signed _____ By _____

(Signature of NYS Workers' Compensation Board Employee)

Telephone Number _____ Title _____

Please Note: Only insurance carriers licensed to write NYS disability benefits insurance policies and NYS licensed insurance agents of those insurance carriers are authorized to issue Form DB-120.1. **Insurance brokers are NOT authorized to issue this form.**

DB-120.1 (9-15)

Additional Instructions for Form DB-120.1

By signing this form, the insurance carrier identified in box "3" on this form is certifying that it is insuring the business referenced in box "1a" for disability benefits under the New York State Disability Benefits Law. The Insurance Carrier or its licensed agent will send this Certificate of Insurance to the entity listed as the certificate holder in box "2".

' the carrier notify the certificate holder within 10 days of a policy being cancelled for non-payment of premium or within 30 days if cancelled for any other reason the insured is otherwise eliminated from the coverage indicated on this certificate prior to the end of the policy effective period? ☐ YES ☒ NO

This certificate is issued as a matter of information only and confers no rights upon the certificate holder. This certificate does not amend, extend or alter the coverage afforded by the policy listed, nor does it confer any rights or responsibilities beyond those contained in the referenced policy.

This certificate may be used as evidence of a Disability Benefits contract of insurance only while the underlying policy is in effect.

Please Note: Upon the cancellation of the disability benefits policy indicated on this form, if the business continues to be named on a permit, license or contract issued by a certificate holder, the business must provide that certificate holder with a new Certificate of NYS Disability Benefits Coverage or other authorized proof that the business is complying with the mandatory coverage requirements of the New York State Disability Benefits Law.

DISABILITY BENEFITS LAW

§220. Subd. 8

(a) The head Of a state Or municipal department, board, commission Or office authorized Or required by law To issue any permit For Or In connection With any work involving the employment Of employees In employment As defined In this article, And Not withstanding any general Or special statute requiring Or authorizing the issue Of such permits, shall Not issue such permit unless proof duly subscribed by an insurance carrier Is produced In a form satisfactory To the chair, that the payment Of disability benefits For all employees has been secured As provided by this article. Nothing herein, however, shall be construed As creating any liability On the part Of such state Or municipal department, board, commission Or office To pay any disability benefits To any such employee If so employed.

(b) The head Of a state Or municipal department, board, commission Or office authorized Or required by law To enter into any contract For Or In connection With any work involving the employment Of employees In employment As defined In this article, And notwithstanding any general Or special statute requiring Or authorizing any such contract, shall Not enter into any such contract unless proof duly subscribed by an insurance carrier Is produced In a form satisfactory To the chair, that the payment Of disability benefits For all employees has been secured As provided by this article.

MAYOR'S CERTIFICATE OR CERTIFICATE OF THE DIRECTOR OF THE BUDGET

Performance Bond #1 (Pages 92 to 95): Use if the total contract price is $5 Million Or Less. Performance Bond #1 has been approved by the U.S. Small Business Administration ("SBA") for participation in its Bond Guarantee Program.

PERFORMANCE BOND #1

KNOW ALL PERSONS BY THESE PRESENTS:,
That we, _____

_____

_____

hereinafter referred to as the "Principal,"
and, _____

_____

_____

hereinafter referred to as the "Surety" ("Sureties") are held and firmly bound to THE CITY OF NEW YORK, hereinafter referred to as the "City" or to its successors and assigns in the penal sum
of _____

_____

_____

($_____) Dollars, lawful money of the United States for the payment of which said sum of money well and truly to be made, we, and each of us, bind ourselves, our heirs, executors, administrators, successors and assigns, jointly and severally, firmly by these presents.

WHEREAS, the Principal is about to enter, or has entered, into a Contract in writing with the City for

_____

_____

a copy of which Contract is annexed to and hereby made a part of this bond as though herein set forth in full;

NOW, THEREFORE, the conditions of this obligation are such that if the Principal, his or its representatives or assigns, shall well and faithfully perform the said Contract and all modifications, amendments, additions and alterations thereto that may hereafter be made, according to its terms and its true intent and meaning, including repair and or replacement of defective work and guarantees of maintenance for the periods stated in the Contract, and shall fully indemnify and save harmless the City from all cost and damage which it may suffer by reason of the Principal's default of the Contract, and shall fully reimburse and repay the City for all outlay and expense which the City may incur in making

<u>Performance Bond #1 (Pages 92 to 95)</u>: Use if the total contract price is $5 Million Or Less. Performance Bond #1 has been approved by the U.S. Small Business Administration ("SBA") for participation in its Bond Guarantee Program.

good any such default and shall protect the said City of New York against, and pay any and all amounts, damages, cost and judgments which may or shall be recovered against said City or its officers or agents or which the said City of New York may be called upon to pay any person or corporation by reason of any damages arising or growing out of the Principal's default of the Contract, then this obligation shall be null and void, otherwise to remain in full force and effect.

The Surety (Sureties), for value received, hereby stipulates and agrees, upon written notice from the City that the City has determined that the Principal is in default of the Contract, to (1) pay the City the cost to complete the contract as determined by the City in excess of the balance of the Contract held by the City, plus any damages or costs to which the City is entitled, up to the full amount of the above penal sum, (2) fully perform and complete the Work to be performed under the Contract, pursuant to the terms, conditions, and covenants thereof, or (3) tender a completion Contractor that is acceptable to the City. The Surety (Sureties) further agrees, at its option, either to notify the City that it elects to pay the city the cost of completion plus any applicable damages and costs under option (1) above, or to commence and diligently perform the Work specified in the Contract, including physical site work, within twenty-five (25) business days after written notice thereof from the City and, if the Surety elects to fully perform and complete the Work, then to complete all Work within the time set forth in the Contract or such other time as agreed to between the City and Surety in accordance with the Contract. If the Surety elects to tender payment pursuant to (1) above, then the Surety shall tender such amount within fifteen (15) business days notification from the City of the cost of completion. The Surety and the City reserve all rights and defenses each may have against the other; provided, however, that the Surety expressly agrees that its reservation of rights shall not provide a basis for non-performance of its obligation to pay the City the cost of completion, to commence and complete all Work as provided herein, or to tender a completion contractor.

The Surety (Sureties), for value received, for itself and its successors and assigns, hereby stipulates and agrees that the obligation of said Surety (Sureties) and its bond shall be in no way impaired or affected by any extension of time, modification, omission, addition, or change in or to the said Contract or the Work to be performed thereunder, or by any payment thereunder before the time required therein, or by any waiver of any provisions thereof, or any moneys due or to become due thereunder; and said Surety (Sureties) does hereby waive notice of any and all of such extensions, modifications, omissions, additions, changes, payments, and waivers, and hereby expressly stipulates and agrees that any and all things done and omitted to be done by and in relation to subcontractors shall have the same effect as to said Surety (Sureties) as though done or omitted to be done by or in relation to said Principal. Notwithstanding the above, if the City makes payments to the Principal before the time required by the contract that in the aggregate exceed $100,000 or 10% of the Contract price, whichever is less, and that have not become earned prior to the Principal being found to be in default, then all payments made to the Principal before the time required by the Contract shall be added to the remaining contract value available to be paid for the completion of the Contract as if such sums had not been paid to the Principal, but shall not provide a basis for non-performance of its obligation to pay the City the cost of completion, to commence and to complete all Work as provided herein, or to tender a completion contractor.

Performance Bond #1 (Pages 92 to 95): Use if the total contract price is $5 Million Or Less. Performance Bond #1 has been approved by the U.S. Small Business Administration ("SBA") for participation in its Bond Guarantee Program.

IN WITNESS WHEREOF, The Principal and the Surety (Sureties) have hereunto set their hands and seals, and such of them as are corporations have caused their corporate seals to be hereunto affixed and these presents to be signed by their proper officers, this

_____ day of _____, 20_____.

(Seal)

_____(L.S.)
Principal

By:_____.

(Seal)
Surety

By:_____.
_____.

(Seal)
Surety

By:_____.
_____.

(Seal)
Surety

By:_____.
_____.

(Seal)
Surety

By:_____.

(Seal)
Surety

By:_____.

Bond Premium Rate _____.

Bond Premium Cost _____.

If the Contractor (Principal) is a partnership, the bond should be signed by each of the individuals who are partners.

If the Contractor (Principal) is a corporation, the bond should be signed in its correct corporate name by a duly authorized officer, agent, or attorney-in-fact.

There should be executed an appropriate number of counterparts of the bond corresponding to the number of counterparts of the Contract.

Performance Bond #1 (Pages 92 to 95): Use if the total contract price is $5 Million Or Less. Performance Bond #1 has been approved by the U.S. Small Business Administration ("SBA") for participation in its Bond Guarantee Program.

ACKNOWLEDGMENT OF PRINCIPAL IF A CORPORATION

State of _____ County of _____ ss:

On this _____ day of _____, 20_____ before me personally came _____,
to me known, who, being by me duly sworn did depose and say that he/she resides at _____
_____; that he/she is the _____
of the corporation described in and which executed the foregoing instrument; and that he/she signed his/her name to the foregoing instrument by order of the directors of said corporation as the duly authorized and binding act thereof.

_____
Notary Public or Commissioner of Deeds.

ACKNOWLEDGMENT OF PRINCIPAL IF A PARTNERSHIP

State of _____ County of _____ ss:

On this _____ day of _____, 20 _____ before me personally came _____,
to me known, who, being by me duly sworn did dispose and say that he/she resides at _____
_____; that he/she is _____ partner of
_____, a limited/general partnership existing under the laws of the State of
_____, the partnership described in and which executed the foregoing instrument;
and that he/she signed his/her name to the foregoing instrument as the duly authorized and binding act of said partnership.

_____
Notary Public or Commissioner of Deeds.

ACKNOWLEDGMENT OF PRINCIPAL IF AN INDIVIDUAL

State of _____ County of _____ ss:

On this _____ day of _____, 20_____ before me personally came _____,
to me known, who,.being by me duly sworn did depose and say that he/she resides at _____
_____, and that he/she is the individual whose name is subscribed to the within instrument and acknowledged to me that by his/her signature on the instrument, said individual executed the instrument.

_____
Notary Public or Commissioner of Deeds

Each executed bond should be accompanied by: (a) appropriate acknowledgments of the respective parties; (b) appropriate duly certified copy of Power of Attorney or other certificate of authority where bond is executed by agent, officer or other representative of Principal or Surety; (c) a duly certified extract from By-Laws or resolutions of Surety under which Power of Attorney or other certificate of authority of its agent, officer or representative was issued, and (d) certified copy of latest published financial statement of assets and liabilities of Surety.

* * * * * * * *

Affix Acknowledgments and Justification of Sureties.

<u>Performance Bond #2 (Pages 96 to 99)</u>: Use if the total contract price is more than $5 Million.

PERFORMANCE BOND #2

KNOW ALL PERSONS BY THESE PRESENTS:,
That we, _____

_____

_____

hereinafter referred to as the "Principal,"
and, _____

_____

_____

hereinafter referred to as the "Surety" ("Sureties") are held and firmly bound to THE CITY OF NEW YORK, hereinafter referred to as the "City" or to its successors and assigns in the penal sum
of _____

_____

_____

($_____) Dollars, lawful money of the United States for the payment of which said sum of money well and truly to be made, we, and each of us, bind ourselves, our heirs, executors, administrators, successors and assigns, jointly and severally, firmly by these presents.

WHEREAS, the Principal is about to enter, or has entered, into a Contract in writing with the City for

_____

_____

a copy of which Contract is annexed to and hereby made a part of this bond as though herein set forth in full;

NOW, THEREFORE, the conditions of this obligation are such that if the Principal, his or its representatives or assigns, shall well and faithfully perform the said Contract and all modifications, amendments, additions and alterations thereto that may hereafter be made, according to its terms and its true intent and meaning, including repair and or replacement of defective work and guarantees of maintenance for the periods stated in the Contract, and shall fully indemnify and save harmless the City from all cost and damage which it may suffer by reason of the Principal's default of the Contract, and shall fully reimburse and repay the City for all outlay and expense which the City may incur in making

<u>Performance Bond #2 (Pages 96 to 99)</u>: Use if the total contract price is more than $5 Million.

good any such default and shall protect the said City of New York against, and pay any and all amounts, damages, cost and judgments which may or shall be recovered against said City or its officers or agents or which the said City of New York may be called upon to pay any person or corporation by reason of any damages arising or growing out of the Principal's default of the Contract, then this obligation shall be null and void, otherwise to remain in full force and effect.

The Surety (Sureties), for value received, hereby stipulates and agrees, upon written notice from the City that the City has determined that the Principal is in default of the Contract, to either (1) pay the full amount of the above penal sum in complete discharge and exoneration of this bond and of all the liabilities of the Surety relating to this bond, or (2) fully perform and complete the Work to be performed under the Contract, pursuant to the terms, conditions, and covenants thereof. The Surety (Sureties) further agrees, at its option, either to tender the penal sum or to commence and diligently perform the Work specified in the Contract, including physical site work, within twenty-five (25) business days after written notice thereof from the City and to complete all Work within the time set forth in the Contract or such other time as agreed to between the City and Surety in accordance with the Contract. The Surety and the City reserve all rights and defenses each may have against the other; provided, however, that the Surety expressly agrees that its reservation of rights shall not provide a basis for non-performance of its obligation to commence and to complete all Work as provided herein.

The Surety (Sureties), for value received, for itself and its successors and assigns, hereby stipulates and agrees that the obligation of said Surety (Sureties) and its bond shall be in no way impaired or affected by any extension of time, modification, omission, addition, or change in or to the said Contract or the Work to be performed thereunder, or by any payment thereunder before the time required therein, or by any waiver of any provisions thereof, or by any assignment, subletting or other transfer thereof or of any Work to be performed or any moneys due or to become due thereunder; and said Surety (Sureties) does hereby waive notice of any and all of such extensions, modifications, omissions, additions, changes, payments, waivers, assignments, subcontracts and transfers, and hereby expressly stipulates and agrees that any and all things done and omitted to be done by and in relation to assignees, subcontractors, and other transferees shall have the same effect as to said Surety (Sureties) as though done or omitted to be done by or in relation to said Principal.

Performance Bond #2 (Pages 96 to 99): Use if the total contract price is more than $5 Million.

IN WITNESS WHEREOF, The Principal and the Surety (Sureties) have hereunto set their hands and seals, and such of them as are corporations have caused their corporate seals to be hereunto affixed and these presents to be signed by their proper officers, this

_____ day of _____ 20 _____ .

(Seal)

_____(L.S.)
Principal

By:_____.

(Seal)

Surety

By:_____.
_____.

(Seal)

Surety

By:_____.
_____.

(Seal)

Surety

By:_____.
_____.

(Seal)

Surety

By:_____.

(Seal)

Surety

By:_____.

Bond Premium Rate _____.

Bond Premium Cost _____.

If the Contractor (Principal) is a partnership, the bond should be signed by each of the individuals who are partners.

If the Contractor (Principal) is a corporation, the bond should be signed in its correct corporate name by a duly authorized officer, agent, or attorney-in-fact.

There should be executed an appropriate number of counterparts of the bond corresponding to the number of counterparts of the Contract.

Performance Bond #2 (Pages 96 to 99): Use if the total contract price is more than $5 Million.

ACKNOWLEDGMENT OF PRINCIPAL IF A CORPORATION

State of _____ County of _____ ss:

On this _____ day of _____, 20 _____ before me personally came _____,
to me known, who, being by me duly sworn did depose and say that he resides at _____
_____ ; that he/she is the _____
of the corporation described in and which executed the foregoing instrument; that he/she signed his/her name to the foregoing instrument by order of the directors of said corporation as the duly authorized and binding act thereof.

_____
Notary Public or Commissioner of Deeds.

ACKNOWLEDGMENT OF PRINCIPAL IF A PARTNERSHIP

State of _____ County of _____ ss:

On this _____ day of _____, 20 _____ before me personally came _____,
to me known, who, being by me duly sworn did depose and say that he/she resides at_____

_____; that he/she is _____ partner of _____, a limited/general partnership existing under the laws of the State of _____, the partnership described in and which executed the foregoing instrument; and that he/she signed his/her name to the foregoing instrument as the duly authorized and binding act of said partnership.

_____
Notary Public or Commissioner of Deeds

ACKNOWLEDGMENT OF PRINCIPAL IF AN INDIVIDUAL

State of _____ County of _____ ss:

On this _____ day of _____, 20_____ before me personally came _____,
to me known, who, being by me duly sworn did depose and say that he/she resides at_____
_____, and that he/she is the individual whose name is subscribed to the within instrument and acknowledged to me that by his/her signature on the instrument, said individual executed the instrument.

_____
Notary Public or Commissioner of Deeds

Each executed bond should be accompanied by: (a) appropriate acknowledgments of the respective parties; (b) appropriate duly certified copy of Power of Attorney or other certificate of authority where bond is executed by agent, officer or other representative of Principal or Surety; (c) a duly certified extract from By-Laws or resolutions of Surety under which Power of Attorney or other certificate of authority of its agent, officer or representative was issued, and (d) certified copy of latest published financial statement of assets and liabilities of Surety.

* * * * * * * *

Affix Acknowledgments and Justification of Sureties.

Payment Bond (Pages 100 to 103): Use for any contract for which a Payment Bond is required.

PAYMENT BOND

KNOW ALL PERSONS BY THESE PRESENTS, That we, _____

_____

_____

_____

hereinafter referred to as the "Principal", and _____

_____

_____

_____

_____

hereinafter referred to as the "Surety" ("Sureties") are held and firmly bound to THE CITY OF NEW YORK, hereinafter referred to as the "City" or to its successors and assigns, in the penal sum of

_____

_____

_____

($_____) Dollars, lawful money of the United States, for the payment of which said sum of money well and truly to be made, we, and each of us, bind ourselves, our heirs, executors, administrators, successors and assigns, jointly and severally, firmly by these presents.

WHEREAS, the Principal is about to enter, or has entered, into a Contract in writing with the City for

_____

_____

_____

a copy of which Contract is annexed to and hereby made a part of this bond as though herein set forth in full;

NOW, THEREFORE, the conditions of this obligation are such that if the Principal, his or its representatives or assigns and other Subcontractors to whom Work under this Contract is sublet and his or their successors and assigns shall promptly pay or cause to be paid all lawful claims for

(a) Wages and compensation for labor performed and services rendered by all persons engaged in the prosecution of the Work under said Contract, and any amendment or extension thereof or addition thereto, whether such persons be agents servants or employees of the Principal or any such Subcontractor, including all persons so engaged who perform the work of laborers or mechanics at or in the vicinity of the site

of the Project regardless of any contractual relationship between the Principal or such Subcontractors, or his or their successors or assigns, on the one hand and such laborers or mechanics on the other, but not including office employees not regularly stationed at the site of the project; and

(b) Materials and supplies (whether incorporated in the permanent structure or not), as well as teams, fuels, oils, implements or machinery furnished, used or consumed by said Principal or any subcontractor at or in the vicinity of the site of the Project in the prosecution of the Work under said Contract and any amendment or extension thereof or addition thereto; then this obligation shall be void, otherwise to remain in full force and effect.

This bond is subject to the following additional conditions, limitations and agreements:

(a) The Principal and Surety (Sureties) agree that this bond shall be for the benefit of any materialmen or laborer having a just claim, as well as the City itself.

(b) All persons who have performed labor, rendered services or furnished materials and supplies, as aforesaid, shall have a direct right of action against the Principal and his, its or their successors and assigns, and the Surety (Sureties) herein, or against either or both or any of them and their successors and assigns. Such persons may sue in their own name, and may prosecute the suit to judgment and execution without the necessity of joining with any other persons as party plaintiff.

(c) The Principal and Surety (Sureties) agree that neither of them will hold the City liable for any judgment for costs of otherwise, obtained by either or both of them against a laborer or materialman in a suit brought by either a laborer or materialman under this bond for moneys allegedly due for performing work or furnishing material.

(d) The Surety (Sureties) or its successors and assigns shall not be liable for any compensation recoverable by an employee or laborer under the Workmen's Compensation Law.

(e) In no event shall the Surety (Sureties), or its successors or assigns, be liable for a greater sum than the penalty of this bond or be subject to any suit, action or proceeding hereon that is instituted by any person, firm, or corporation hereunder later than two years after the complete performance of said Contract and final settlement thereof.

The Principal, for himself and his successors and assigns, and the Surety (Sureties), for itself and its successors and assigns, do hereby expressly waive any objection that might be interposed as to the right of the City to require a bond containing the foregoing provisions, and they do hereby further expressly waive any defense which they or either of them might interpose to an action brought hereon by any person, firm or corporation, including subcontractors, materialmen and third persons, for work, labor, services, supplies or material performed rendered, or furnished as aforesaid upon the ground that there is no law authorizing the City to require the foregoing provisions to be place in this bond.

And the Surety (Sureties), for value received, for itself and its successors and assigns, hereby stipulates and agrees that the obligation of said Surety (Sureties), and its bonds shall be in no way impaired or affected by any extension of time, modification, omission, addition, or change in or of the said Contract or the work to be performed thereunder, or by any payment thereunder before the time required therein, or by any waiver of any provisions thereof, or by any assignment, subletting or other transfer thereof or of any part thereof, or of any Work to be performed, or any moneys due to become due thereunder and said Surety (Sureties) does hereby waive notice of any and all of such extensions, modifications, omissions, additions, changes, payments, waivers, assignments, subcontracts and transfers, and hereby expressly stipulates and agrees that any and all things done and omitted to be done by and in relation to assignees, Subcontractors, and other transferees shall have the same effect as to said Surety (Sureties) as though done or omitted to be done or in relation to said Principal.

Payment Bond (Pages 100 to 103): Use for any contract for which a Payment Bond is required.

IN WITNESS WHEREOF, the Principal and the Surety (Sureties) have hereunto set their hands and seals, and such of them as are corporations have caused their corporate seals to be hereunto affixed and these presents to be signed by their proper officers, this _____ day of _____, _____.

(Seal) _____(L.S.)
Principal

By:_____

(Seal) _____
Surety

By:_____

(Seal) _____
Surety

By:_____

(Seal) _____
Surety

By:_____

(Seal) _____
Surety

By:_____

If the Contractor (Principal) is a partnership, the bond should be signed by each of the individuals who are partners.

If the Contractor (Principal) is a corporation, the bond should be signed in its correct corporate name by a duly authorized officer, agent, or attorney-in-fact.

There should be executed an appropriate number of counterparts of the bond corresponding to the number of counterparts of the Contract.

Payment Bond (Pages 100 to 103): Use for any contract for which a Payment Bond is required.

ACKNOWLEDGMENT OF PRINCIPAL, IF A CORPORATION

State of _____ County of _____ ss:

On this _____ day of _____, _____, before me personally came _____ to me known, who, being by me duly sworn did depose and say that he resides at _____ _____ that he is the _____ of the corporation described in and which executed the foregoing instrument; that he knows the seal of said corporation; that one of the seals affixed to said instrument is such seal; that it was so affixed by order of the directors of said corporation, and that he signed his name thereto by like order.

_____
Notary Public or Commissioner of Deeds

ACKNOWLEDGMENT OF PRINCIPAL, IF A PARTNERSHIP

State of _____ County of _____ ss:

On this _____ day of _____, _____, before me personally appeared _____ to me known, and known to me to be one of the members of the firm of _____ _____ described in and who executed the foregoing instrument; and he acknowledged to me that he executed the same as and for the act and deed of said firm.

_____
Notary Public or Commissioner of Deeds

ACKNOWLEDGMENT OF PRINCIPAL, IF AN INDIVIDUAL

State of _____ County of _____ ss:

On this _____ day of _____, _____, before me personally appeared _____ to me known, and known to me to be the person described in and who executed the foregoing instrument; and acknowledged that he executed the same.

_____
Notary Public or Commissioner of Deeds

Each executed bond should be accompanied by: (a) appropriate acknowledgments of the respective parties; (b) appropriate duly certified copy of Power of Attorney or other certificate of authority where bond is executed by agent, officer or other representative of Principal or Surety; (c) a duly certified extract from By-Laws or resolutions of Surety under which Power of Attorney or other certificate of authority of its agent, officer or representative was issued, and (d) certified copy of latest published financial statement of assets and liabilities of Surety.

* * * * * * * *

Affix Acknowledgments and Justification of Sureties.

(NO TEXT ON THIS PAGE)

SCHEDULE OF WORKMEN, MECHANICS AND LABORERS

The following is a list of classifications for workmen, mechanics and laborers which are anticipated to be employed in the performance of work under this contract, followed by a schedule of the prevailing wage rates and supplemental benefits for all classifications as established by the Comptroller of the City of New York.

Request for interpretation or correction under Subsection A of Section No. 3 in the Information for Bidders includes all requests for clarification of the classification of trades to be employed in the performance of the work under this contract.

In the event that a trade not listed in the classification of trades required to be used at the time of the award of the contract is in fact employed during the performance of this contract, the Contractor shall be required to obtain from the agency the prevailing wage rates and supplementary benefits for the trades used and to complete the performance of this contract at the price at which the contract was awarded.

CODE	CLASSIFICATION
15 42 001	Rigger
15 42 002	Sign Erector
16 11 001	Gardener
16 11 002	Tree Pruner
16 11 003	Tree Remover
16 11 011	Asphalt Raker (Highway & Paving)
16 11 012	Tamper (Highway & Paving)
16 11 013	Curbsetter (Highway & Paving)
16 11 014	Formsetter (Highway & Paving)
16 11 015	Rammerman (Highway & Paving)
16 11 016	Laborer (Highway & Paving)
16 11 017	ALL OTHER TITLES (Highway & Paving)
16 23 001	Laborer
16 23 002	Operating Engineer (Heavy Construction-Maintenance)
16 23 003	Junior Operating Engineer
16 23 004	Junior Operating Engineer
16 23 005	Junior Operating Engineer
16 23 006	Fireman (Heavy Construction)
16 23 007	Oiler (Heavy Construction)
16 23 051	Surveyor-Heavy Construction
16 23 052	Surveyor-Heavy Construction-Instrument Man
16 23 053	Surveyor-Heavy Construction-Rodman
16 23 057	Surveyor-Land Surveying-Party Chief
16 23 058	Surveyor-Land Surveying-Instrument Man
16 23 059	Surveyor-Land Surveying-Rodman

CODE	CLASSIFICATION
16 23 061	Operating Engineer-Road & Heavy Construction
16 23 062	Operating Engineer-Paving
16 23 063	Operating Engineer-Concrete
16 23 071	Teamster-Heavy Equipment Trailer Driver
16 23 072	Teamster-Dump Truck Driver
16 23 073	Teamster-Flat Bed Trailer Driver (3-Axle)
16 23 074	Teamster-Redi-Mix (Sand and Gravel)
16 29 011	Drill Runners
17 11 001	Plumbers
17 21 001	Painter (Brush & Roller)
17 31 001	Electrician
17 41 001	Bricklayer
17 41 002	Mason Tender
17 41 004	Cement Mason
17 42 002	Metallic Lather
17 51 001	Carpenter
17 51 002	Dock Builder
17 71 001	Cement & Concrete Worker
17 91 001	Structural Iron Worker
17 95 001	Barman
17 96 021	Derrickmen & Riggers
17 99 001	Ornamental Iron Worker
17 99 002	Sandblaster
17 99 005	Pointers (Waterproofer)
17 99 011	Welders

Each classification may include trainees depending upon project staffing schedules and as required by the terms of this contract.

LABOR LAW §220 PREVAILING WAGE SCHEDULE

Workers, Laborers and Mechanics employed on a public work project must receive not less than the prevailing rate of wage and benefits for the classification of work performed by each upon such public work. Pursuant to Labor Law §220 the Comptroller of the City of New York has promulgated this schedule solely for Workers, Laborers and Mechanics engaged by private contractors on New York City public work contracts.

This schedule is a compilation of separate determinations of the prevailing rate of wage and supplements made by the Comptroller for each trade classification listed herein pursuant to New York State Labor Law section 220 (5). The source of the wage and supplement rates, whether a collective bargaining agreement, survey data or other, is listed at the end of each classification.

Agency Chief Contracting Officers should contact the Bureau of Labor Law's Classification Unit with any questions concerning trade classifications, prevailing rates or prevailing practices with respect to procurement on New York City public works contracts. Contractors are advised to review the Comptroller's Prevailing Wage Schedule before bidding on public works contracts. Contractors with questions concerning trade classifications, prevailing rates or prevailing practices with respect to public works contracts in the procurement stage must contact the contracting agency responsible for the procurement.

Any error as to compensation under the prevailing wage law or other information as to trade classification, made by the contracting agency in the contract documents or in any other communication, will not preclude a finding against the contractor of prevailing wage violation.

Any questions concerning trade classifications, prevailing rates or prevailing practices on New York City public works contracts that have already been awarded may be directed to the Bureau of Labor Law's Classification Unit by calling (212) 669-7974. All callers must have the agency name and contract registration number available when calling with questions on public works contracts. Please direct all other compliance issues to: Bureau of Labor Law, Attn: Wasyl Kinach, P.E., Office of the Comptroller, 1 Centre Street, Room 1122, New York, N.Y. 10007; Fax (212) 669-4002.

The appropriate schedule of prevailing wages and benefits must be posted at all public work sites pursuant to Labor Law §220 (3-a) (a).

This schedule is applicable to work performed during the effective period, unless otherwise noted. Changes to this schedule are published on our web site www.comptroller.nyc.gov. Contractors must pay the wages and supplements in effect when the worker, laborer, mechanic performs the work. Preliminary schedules for future one-year periods appear in the City Record on or about June 1 each succeeding year. Final schedules appear on or about July 1 in the City Record and on our web site www.comptroller.nyc.gov.

The Comptroller's Office has attempted to include all overtime, shift and night differential, Holiday, Saturday, Sunday or other premium time work. However, this schedule does not set forth every prevailing practice with respect to such rates with which employers must comply. All such practices are nevertheless part of the employer's prevailing wage obligation and contained in the collective bargaining agreements of the prevailing wage unions. These collective bargaining agreements are available for inspection by appointment. Requests for appointments may be made by calling (212) 669-4443, Monday through Friday between the hours of 9 a.m. and 5 p.m.

Prevailing rates and ratios for apprentices are attached to this schedule in the Appendix. Pursuant to Labor Law §220 (3-e), only apprentices who are individually registered in a bona fide program to which the employer contractor is a participant, registered with the New York State Department of Labor, may be employed on a public work project. Workers who are not journey persons or not registered apprentices pursuant to Labor Law §220 (3-e) may not be substituted for apprentices and must be paid as journey persons.

Public Work construction, reconstruction, demolition, excavation, rehabilitation, repair, renovation, alteration, or improvement contracts awarded pursuant to a Project Labor Agreement ("PLA") in accordance with Labor Law section 222 may have different labor standards for shift, premium and overtime work. Please refer to the PLA's pre-negotiated labor agreements for wage and benefit rates applicable to work performed outside of the regular workday. More information is available at the Mayor's Office of Contract Services (MOCS) web page at http://www.nyc.gov/html/mocs/html/vendors/pla.shtml.

All the provisions of Labor Law section 220 remain applicable to PLA work including, but not limited to, the enforcement of prevailing wage requirements by the Comptroller; however, we will enforce shift, premium, overtime and other non-standard rates as they appear in a project's pre-negotiated labor agreement.

In order to meet their obligation to provide prevailing supplemental benefits to each covered employee, employers must either:

1) Provide bona-fide benefits which cost the employer no less than the prevailing supplemental benefits rate; or
2) Supplement the employee's hourly wage by an amount no less than the prevailing supplemental benefits rate; or
3) Provide a combination of bona-fide benefits and wage supplements which cost the employer no less than the prevailing supplemental benefits rate in total.

Particular attention should be given to the supplemental benefits requirement. Although in most instances the payment or provision for supplemental benefits is for each hour worked, some classifications require the payment or provision of supplemental benefits for each hour paid. Consequently, some prevailing practices require benefits to be purchased at the overtime, shift differential, Holiday, Saturday, Sunday or other premium time rate.

Benefits are paid for ***EACH HOUR WORKED*** unless otherwise noted.

Wasyl Kinach, P.E.
Director of Classifications
Bureau of Labor Law

TABLE OF CONTENTS

CLASSIFICATION	PAGE
ASBESTOS HANDLER	5
BLASTER	5
BOILERMAKER	7
BRICKLAYER	8
CARPENTER - BUILDING COMMERCIAL	9
CARPENTER - HEAVY CONSTRUCTION WORK	10
CARPENTER - SIDEWALK SHED, SCAFFOLD AND HOIST	11
CEMENT & CONCRETE WORKER	12
CEMENT MASON	13
CORE DRILLER	13
DERRICKPERSON AND RIGGER	15
DIVER	15
DOCKBUILDER - PILE DRIVER	16
DRIVER: TRUCK (TEAMSTER)	17
ELECTRICIAN	19
ELECTRICIAN - ALARM TECHNICIAN	22
ELECTRICIAN-STREET LIGHTING WORKER	23
ELEVATOR CONSTRUCTOR	24
ELEVATOR REPAIR & MAINTENANCE	25
ENGINEER	26
ENGINEER - CITY SURVEYOR AND CONSULTANT	31
ENGINEER - FIELD (BUILDING CONSTRUCTION)	32
ENGINEER - FIELD (HEAVY CONSTRUCTION)	33
ENGINEER - FIELD (STEEL ERECTION)	34
ENGINEER - OPERATING	35
FLOOR COVERER	43
GLAZIER	44
GLAZIER - REPAIR & MAINTENANCE	45
HEAT AND FROST INSULATOR	46
HOUSE WRECKER	47
IRON WORKER - ORNAMENTAL	47
IRON WORKER - STRUCTURAL	48
LABORER	49
LANDSCAPING	50

MARBLE MECHANIC 52
MASON TENDER 53
MASON TENDER (INTERIOR DEMOLITION WORKER) 54
METALLIC LATHER 55
MILLWRIGHT 56
MOSAIC MECHANIC 57
PAINTER 58
PAINTER - SIGN 58
PAINTER - STRIPER 59
PAINTER - STRUCTURAL STEEL 60
PAPERHANGER 61
PAVER AND ROADBUILDER 62
PLASTERER 64
PLASTERER - TENDER 65
PLUMBER 65
PLUMBER (MECHNICAL EQUIPMENT AND SERVICE) 67
PLUMBER (RESIDENTIAL RATES FOR 1, 2 AND 3 FAMILY HOME CONSTRUCTION) 67
PLUMBER: PUMP & TANK 68
POINTER - WATERPROOFER, CAULKER MECHANIC (EXTERIOR BUILDING RENOVATION) 69
ROOFER 70
SANDBLASTER - STEAMBLASTER 70
SHEET METAL WORKER 71
SHEET METAL WORKER - SPECIALTY 72
SHIPYARD WORKER 73
SIGN ERECTOR 75
STEAMFITTER 75
STEAMFITTER - REFRIGERATION AND AIR CONDITIONER 77
STONE MASON - SETTER 79
TAPER 80
TELECOMMUNICATION WORKER 81
TILE FINISHER 82
TILE LAYER - SETTER 83
TIMBERPERSON 83
TUNNEL WORKER 84
WELDER 86

ASBESTOS HANDLER
(Hazardous Material; Disturbs, removes, encapsulates, repairs, or encloses friable asbestos material)

Asbestos Handler

Effective Period: 7/1/2015 - 6/30/2016
Wage Rate per Hour: $36.00
Supplemental Benefit Rate per Hour: $15.95

Overtime
Time and one half the regular rate after an 8 hour day.
Time and one half the regular rate for Sunday.
Time and one half the regular hourly rate after 40 hours in any work week.

Overtime Holidays
Time and one half the regular rate for work on the following holiday(s).
New Year's Day
Good Friday
Memorial Day
Independence Day
Labor Day
Thanksgiving Day
Christmas Day
Easter

Paid Holidays
None

(Local #78 and Local #12A)

BLASTER

Blaster

Effective Period: 7/1/2015 - 6/30/2016
Wage Rate per Hour: $46.89
Supplemental Benefit Rate per Hour: $41.19

Blaster (Hydraulic)

Effective Period: 7/1/2015 - 6/30/2016

Wage Rate per Hour: $47.71
Supplemental Benefit Rate per Hour: $41.19

Blaster - Trac Drill Hydraulic

Effective Period: 7/1/2015 - 6/30/2016
Wage Rate per Hour: $42.25
Supplemental Benefit Rate per Hour: $41.19

Blaster - Wagon: Air Trac: Quarry Bar: Drillrunners

Effective Period: 7/1/2015 - 6/30/2016
Wage Rate per Hour: $41.46
Supplemental Benefit Rate per Hour: $41.19

Blaster - Operators of Jack Hammers

Chippers: Spaders: Concrete Breakers: and all other pneumatic tools of like usage: Walk Behind Self Propelled Hydraulic Asphalt and Concrete Breakers: Hydro (Water) Demolition

Effective Period: 7/1/2015 - 6/30/2016
Wage Rate per Hour: $40.42
Supplemental Benefit Rate per Hour: $41.19

Blaster - Powder Carriers

Effective Period: 7/1/2015 - 6/30/2016
Wage Rate per Hour: $36.53
Supplemental Benefit Rate per Hour: $41.19

Blaster - Hydraulic Trac Drill Chuck Tender

Effective Period: 7/1/2015 - 6/30/2016
Wage Rate per Hour: $35.25
Supplemental Benefit Rate per Hour: $41.19

Blaster - Chuck Tender & Nipper

Effective Period: 7/1/2015 - 6/30/2016
Wage Rate per Hour: $34.50
Supplemental Benefit Rate per Hour: $41.19

Blaster - Magazine Keepers: (Watch Person)

Effective Period: 7/1/2015 - 6/30/2016
Wage Rate per Hour: $20.68
Supplemental Benefit Rate per Hour: $41.19

Overtime Description

Magazine Keepers:
Time and one half for work performed in excess of forty (40) hours per week and for work performed on Saturdays, Sundays and Holidays.

All Other Employees:
Time and one-half for the first eight hours of work on Saturday and for Make-up Time. Double time for all hours over eight Monday through Friday (except make-up hours) and for all hours worked on Sunday and Holidays.

Overtime

Double time the regular rate after an 8 hour day.
Time and one half the regular rate for Saturday.
Double time the regular rate for Sunday.

Overtime Holidays

Double time the regular rate for work on the following holiday(s).
New Year's Day
Memorial Day
Independence Day
Labor Day
Columbus Day
Presidential Election Day
Thanksgiving Day
Christmas Day

Paid Holidays

None

Shift Rates

A single shift shall be 8 hours plus an unpaid lunch, starting at 8:00 A.M (or between 6:00 A.M. and 10:00 A.M. on weekdays). When two (2) shifts are employed, each shift shall be 8 hours plus ½ hour unpaid lunch. When three (3) shifts are employed, each shift will work seven and one-half (7 ½) hours, but will be paid for eight (8) hours, since only one-half (½) hour is allowed for mealtime. When two (2) or more shifts are employed, single time will be paid for each shift. The first 8 hours of any and all work performed Monday through Friday inclusive of any off-shift shall be at the single time rate.

(Local #29)

BOILERMAKER

Boilermaker

Effective Period: 7/1/2015 - 6/30/2016
Wage Rate per Hour: $51.56
Supplemental Benefit Rate per Hour: $41.69
Supplemental Note: For time and one half overtime - $61.94 For double overtime - $82.18

Overtime Description

For Repair and Maintenance work:
Time and one half the regular rate after an 8 hour day.
Time and one half the regular rate for Saturday.
Double time the regular rate for Sunday.
For New Construction work:
Double time the regular rate after an 8 hour day.
Double time the regular time rate for Saturday.
Double time the regular rate for Sunday.

Overtime Holidays

Double time the regular rate for work on the following holiday(s).
New Year's Day
President's Day
Memorial Day
Independence Day
Columbus Day
Election Day
Veteran's Day
Thanksgiving Day
Christmas Day

Quadruple time the regular rate for work on the following holiday(s).
Labor Day

Paid Holidays

Good Friday
Day after Thanksgiving
Day before Christmas
Day before New Year's Day

Shift Rates

When shifts are required, the first shift shall work eight (8) hours at the regular straight-time hourly rate. The second shift shall work seven and one-half (7 ½) hours and receive eight hours at the regular straight time hourly rate plus twenty-five cents ($0.25) per hour. The third shift shall work seven (7) hours and receive eight hours at the regular straight time hourly rate plus fifty cents ($0.50) per hour. A thirty (30) minute lunch period shall not be considered as time worked. Work in excess of the above shall be paid overtime at the appropriate new construction work or repair work overtime wage and supplemental benefit hourly rate.

(Local #5)

BRICKLAYER

Bricklayer

Effective Period: 7/1/2015 - 6/30/2016
Wage Rate per Hour: $48.91

Supplemental Benefit Rate per Hour: $28.03

Overtime
Time and one half the regular rate after a 7 hour day.
Time and one half the regular rate for Saturday.
Double time the regular rate for Sunday.
Saturday may be used as a make-up day at straight time when a day is lost during that week to inclement weather.

Overtime Holidays
Double time the regular rate for work on the following holiday(s).
New Year's Day
Memorial Day
Independence Day
Labor Day
Thanksgiving Day
Christmas Day

Paid Holidays
None

Shift Rates
Overtime rates to be paid outside the regular scheduled work day.

(Bricklayer District Council)

CARPENTER - BUILDING COMMERCIAL

Building Commercial

Effective Period: 7/1/2015 - 6/30/2016
Wage Rate per Hour: $50.50
Supplemental Benefit Rate per Hour: $45.88

Overtime
Time and one half the regular rate after an 8 hour day.
Time and one half the regular rate for Saturday.
Double time the regular rate for Sunday.
Saturday may be used as a make-up day at straight time when a day is lost during that week to inclement weather.

Overtime Holidays
Double time the regular rate for work on the following holiday(s).
New Year's Day
Washington's Birthday
Memorial Day

Independence Day
Labor Day
Columbus Day
Presidential Election Day
Thanksgiving Day
Day after Thanksgiving
Christmas Day

Paid Holidays
None

Shift Rates
The second shift will receive one hour at the double time rate of pay for the last hour of the shift; eight hours pay for seven hours of work, nine hours pay for eight hours of work. There must be a first shift in order to work a second shift.

(Carpenters District Council)

CARPENTER - HEAVY CONSTRUCTION WORK
(Construction of Engineering Structures and Building Foundations)

Heavy Construction Work

Effective Period: 7/1/2015 - 6/30/2016
Wage Rate per Hour: $50.50
Supplemental Benefit Rate per Hour: $46.65

Overtime
Time and one half the regular rate after an 8 hour day.
Time and one half the regular rate for Saturday.
Double time the regular rate for Sunday.
Saturday may be used as a make-up day at straight time when a day is lost during that week to inclement weather.

Overtime Holidays
Double time the regular rate for work on the following holiday(s).
New Year's Day
President's Day
Memorial Day
Independence Day
Labor Day
Columbus Day
Presidential Election Day
Thanksgiving Day
Christmas Day

Paid Holidays
None

Shift Rates
Off shift work commencing between 5:00 P.M. and 11:00 P.M. shall work eight and one half hours allowing for one half hour for lunch. The wage rate shall be 113% of the straight time hourly wage rate.

(Carpenters District Council)

CARPENTER - SIDEWALK SHED, SCAFFOLD AND HOIST

Carpenter - Hod Hoist

(Assisted by Mason Tender)

Effective Period: 7/1/2015 - 6/30/2016
Wage Rate per Hour: $49.60
Supplemental Benefit Rate per Hour: $43.00

Overtime
Time and one half the regular rate after an 8 hour day.
Time and one half the regular rate for Saturday.
Double time the regular rate for Sunday.
Saturday may be used as a make-up day at straight time when a day is lost during that week to inclement weather.

Overtime Holidays
Double time the regular rate for work on the following holiday(s).
New Year's Day
President's Day
Memorial Day
Independence Day
Labor Day
Columbus Day
Presidential Election Day
Thanksgiving Day
Day after Thanksgiving
Christmas Day

Paid Holidays
None

Shift Rates
The second shift will receive one hour at the double time rate of pay for the last hour of the shift; eight hours pay for seven hours of work, nine hours pay for eight hours of work. There must be a first shift in order to work a second shift.

(Carpenters District Council)

CEMENT & CONCRETE WORKER

Cement & Concrete Worker

Effective Period: 7/1/2015 - 6/30/2016
Wage Rate per Hour: $42.48
Supplemental Benefit Rate per Hour: $26.57
Supplemental Note: $29.32 on Saturdays; $32.07 on Sundays & Holidays

Overtime Description
Time and one half the regular rate after 7 hour day (time and one half the regular rate after an 8 hour day when working with Dockbuilders on pile cap forms and for work below street level to the top of the foundation wall, not to exceed 2 feet or 3 feet above the sidewalk-brick shelf, when working on the foundation and structure.)

Overtime
Time and one half the regular rate for Saturday.
Double time the regular rate for Sunday.

Overtime Holidays
Double time the regular rate for work on the following holiday(s).
New Year's Day
President's Day
Good Friday
Memorial Day
Independence Day
Labor Day
Columbus Day
Presidential Election Day
Thanksgiving Day
Christmas Day

Paid Holidays
1/2 day before Christmas Day
1/2 day before New Year's Day

Shift Rates
On shift work extending over a twenty-four hour period, all shifts are paid at straight time.

(Cement Concrete Workers District Council)

CEMENT MASON

Cement Mason

Effective Period: 7/1/2015 - 6/30/2016
Wage Rate per Hour: $38.88
Supplemental Benefit Rate per Hour: $39.80
Supplemental Note: For time and one half overtime - $49.05; For double overtime - $58.30

Overtime Description
Time and one-half the regular rate after an 8 hour day, double time the regular rate after 10 hours. Time and one-half the regular rate on Saturday, double time the regular rate after 10 hours. Double time the regular rate on Sunday.

Overtime Holidays
Double time the regular rate for work on the following holiday(s).
New Year's Day
President's Day
Good Friday
Memorial Day
Independence Day
Labor Day
Columbus Day
Presidential Election Day
Thanksgiving Day
Christmas Day

Paid Holidays
Any worker who reports to work on Christmas Eve or New Year's Eve pursuant to his employer's instruction shall be entitled to three (3) hours afternoon pay without working.

Shift Rates
For an off shift day, (work at times other than the regular 7:00 A.M. to 3:30 P.M. work day) a cement mason shall be paid at the regular hourly rate plus a 25% per hour differential. Four Days a week at Ten (10)hour day.

(Local #780)

CORE DRILLER

Core Driller

Effective Period: 7/1/2015 - 6/30/2016
Wage Rate per Hour: $36.82
Supplemental Benefit Rate per Hour: $22.69

Core Driller Helper

Effective Period: 7/1/2015 - 6/30/2016
Wage Rate per Hour: $29.44
Supplemental Benefit Rate per Hour: $22.69

Core Driller Helper(Third year in the industry)

Effective Period: 7/1/2015 - 6/30/2016
Wage Rate per Hour: $26.50
Supplemental Benefit Rate per Hour: $22.69

Core Driller Helper (Second year in the industry)

Effective Period: 7/1/2015 - 6/30/2016
Wage Rate per Hour: $23.55
Supplemental Benefit Rate per Hour: $22.69

Core Driller Helper (First year in the industry)

Effective Period: 7/1/2015 - 6/30/2016
Wage Rate per Hour: $20.61
Supplemental Benefit Rate per Hour: $22.69

Overtime Description
Time and one half the regular rate for work on a holiday plus Holiday pay when worked.

Overtime
Time and one half the regular rate after an 8 hour day.
Time and one half the regular rate for Saturday.
Double time the regular rate for Sunday.
Time and one half the regular rate for work on the following holiday(s).

Paid Holidays
New Year's Day
Memorial Day
Independence Day
Labor Day
Thanksgiving Day
Christmas Day

Shift Rates
The shift day shall be the continuous eight and one-half (8½) hours from 6:00 A.M. to 2:30 P.M. and from 2:30 P.M. to 11:00 P.M., including one-half (½) hour of employees regular rate of pay for lunch. When two (2) or more shifts are employed, single time shall be paid for each shift, but those employees employed on a shift other than from 8:00 A.M. to 5:00 P.M. shall, in addition, receive seventy-five cents ($0.75) per hour differential for each hour worked. When three (3) shifts are needed, each shift shall work seven and one-half (7 ½) hours paid for eight (8) hours of labor and be permitted one-half (½) hour for mealtime.

(Carpenters District Council)

DERRICKPERSON AND RIGGER

Derrick Person & Rigger

Effective Period: 7/1/2015 - 6/30/2016
Wage Rate per Hour: $44.84
Supplemental Benefit Rate per Hour: $49.28
Supplemental Note: The above supplemental rate applies for work performed in Manhattan, Bronx, Brooklyn and Queens. $50.70 - For work performed in Staten Island.

Overtime Description
The first two hours of overtime on weekdays and the first seven hours of work on Saturdays are paid at time and one half for wages and supplemental benefits. All additional overtimes is paid at double time for wages and supplemental benefits. Deduct $1.42 from the Staten Island hourly benefits rate before computing overtime.

Overtime
Double time the regular rate for Sunday.

Overtime Holidays
Double time the regular rate for work on the following holiday(s).
New Year's Day
Washington's Birthday
Good Friday
Memorial Day
Independence Day
Labor Day
Thanksgiving Day
Christmas Day

Paid Holidays
1/2 day on Christmas Eve if work is performed in the A.M.

(Local #197)

DIVER

Diver (Marine)

Effective Period: 7/1/2015 - 6/30/2016
Wage Rate per Hour: $63.82

Supplemental Benefit Rate per Hour: $46.65

Diver Tender (Marine)

Effective Period: 7/1/2015 - 6/30/2016
Wage Rate per Hour: $45.47
Supplemental Benefit Rate per Hour: $46.65

Overtime
Time and one half the regular rate after an 8 hour day.
Time and one half the regular rate for Saturday.
Double time the regular rate for Sunday.
Saturday may be used as a make-up day at straight time when a day is lost during that week to inclement weather.

Overtime Holidays
Double time the regular rate for work on the following holiday(s).
New Year's Day
President's Day
Memorial Day
Independence Day
Labor Day
Columbus Day
Presidential Election Day
Thanksgiving Day
Christmas Day

Paid Holidays
None

Shift Rates
When three shifts are utilized each shift shall work seven and one half-hours (7 1/2 hours) and paid for 8 hours, allowing for one half hour for lunch.

(Carpenters District Council)

DOCKBUILDER - PILE DRIVER

Dockbuilder - Pile Driver

Effective Period: 7/1/2015 - 6/30/2016
Wage Rate per Hour: $50.50
Supplemental Benefit Rate per Hour: $46.65

Overtime
Time and one half the regular rate after an 8 hour day.

Time and one half the regular rate for Saturday.
Double time the regular rate for Sunday.
Saturday may be used as a make-up day at straight time when a day is lost during that week to inclement weather.

Overtime Holidays

Double time the regular rate for work on the following holiday(s).
New Year's Day
President's Day
Memorial Day
Independence Day
Labor Day
Columbus Day
Presidential Election Day
Thanksgiving Day
Christmas Day

Paid Holidays

None

Shift Rates

Off shift work commencing between 5:00 P.M. and 11:00 P.M. shall work eight and one half hours allowing for one half hour for lunch. The wage rate shall be 113% of the straight time hourly wage rate.

(Carpenters District Council)

DRIVER: TRUCK (TEAMSTER)

Driver - Dump Truck

Effective Period: 7/1/2015 - 6/30/2016
Wage Rate per Hour: $39.53
Supplemental Benefit Rate per Hour: $41.59
Supplemental Note: Over 40 hours worked: time and one half rate $16.94, double time rate $22.58

Driver - Tractor Trailer

Effective Period: 7/1/2015 - 6/30/2016
Wage Rate per Hour: $39.50
Supplemental Benefit Rate per Hour: $43.35
Supplemental Note: For over 40 hours worked: at time and one half - $16.65; at double time - $22.20

Driver - Euclid & Turnapull Operator

Effective Period: 7/1/2015 - 6/30/2016
Wage Rate per Hour: $40.06

Supplemental Benefit Rate per Hour: $43.35
Supplemental Note: Over 40 hours worked: time and one half rate $16.65 double time rate $22.20

Overtime Description
For Paid Holidays: Holiday pay for all holidays shall be prorated based two hours per day for each day worked in the holiday week, not to exceed 8 hours of holiday pay. For Thanksgiving week, the prorated share shall be 5 1/3 hours of holiday pay for each day worked in Thanksgiving week.

Overtime
Time and one half the regular rate after an 8 hour day.
Time and one half the regular rate for Saturday.
Double time the regular rate for Sunday.

Overtime Holidays
Double time the regular rate for work on the following holiday(s).
New Year's Day
President's Day
Memorial Day
Independence Day
Labor Day
Columbus Day
Veteran's Day
Thanksgiving Day
Day after Thanksgiving
Christmas Day

Paid Holidays
New Year's Day
President's Day
Memorial Day
Independence Day
Labor Day
Columbus Day
Veteran's Day
Thanksgiving Day
Day after Thanksgiving
Christmas Day

Shift Rates
Off single shift work commencing between 6:00 P.M. and 5:00 A.M. shall work eight and one half hours allowing for one half hour for lunch and receive 9 hours pay for 8 hours of work.

Driver Redi-Mix (Sand & Gravel)

Effective Period: 7/1/2015 - 6/30/2016
Wage Rate per Hour: $36.30
Supplemental Benefit Rate per Hour: $40.02
Supplemental Note: Over 40 hours worked: time and one half rate $13.90, double time rate $18.53

Overtime Description
For Paid Holidays: Employees working two (2) days in the calendar week in which the holiday falls are to paid for these holidays, provided they shape each remaining workday during that calendar week.

Overtime
Time and one half the regular rate after an 8 hour day.
Time and one half the regular rate for Saturday.
Double time the regular rate for Sunday.

Overtime Holidays
Double time the regular rate for work on the following holiday(s).
President's Day
Columbus Day
Veteran's Day

Triple time the regular rate for work on the following holiday(s).
New Year's Day
Memorial Day
Independence Day
Labor Day
Thanksgiving Day
Christmas Day

Paid Holidays
New Year's Day
President's Day
Memorial Day
Independence Day
Labor Day
Columbus Day
Election Day
Thanksgiving Day
Christmas Day

(Local #282)

ELECTRICIAN
(Including all low voltage cabling carrying data; video; and voice in combination with data and or video.)

Electrician "A" (Regular Day)

Effective Period: 7/1/2015 - 6/30/2016
Wage Rate per Hour: $54.00
Supplemental Benefit Rate per Hour: $50.03

Electrician "A" (Regular Day Overtime)

Effective Period: 7/1/2015 - 6/30/2016
Wage Rate per Hour: $81.00
Supplemental Benefit Rate per Hour: $53.41

Electrician "A" (Day Shift)

Effective Period: 7/1/2015 - 6/30/2016
Wage Rate per Hour: $54.00
Supplemental Benefit Rate per Hour: $50.03

Electrician "A" (Day Shift Overtime After 8 hours)

Effective Period: 7/1/2015 - 6/30/2016
Wage Rate per Hour: $81.00
Supplemental Benefit Rate per Hour: $53.41

Electrician "A" (Swing Shift)

Effective Period: 7/1/2015 - 6/30/2016
Wage Rate per Hour: $63.36
Supplemental Benefit Rate per Hour: $56.94

Electrician "A" (Swing Shift Overtime After 7.5 hours)

Effective Period: 7/1/2015 - 6/30/2016
Wage Rate per Hour: $95.04
Supplemental Benefit Rate per Hour: $60.91

Electrician "A" (Graveyard Shift)

Effective Period: 7/1/2015 - 6/30/2016
Wage Rate per Hour: $70.97
Supplemental Benefit Rate per Hour: $62.78

Electrician "A" (Graveyard Shift Overtime After 7 hours)

Effective Period: 7/1/2015 - 6/30/2016
Wage Rate per Hour: $106.46
Supplemental Benefit Rate per Hour: $67.23

Overtime

Time and one half the regular rate after a 7 hour day.
Time and one half the regular rate for Saturday.
Time and one half the regular rate for Sunday.

Overtime Holidays

Time and one half the regular rate for work on a holiday.
New Year's Day
Martin Luther King Jr. Day
President's Day
Memorial Day
Independence Day
Labor Day
Columbus Day
Veteran's Day
Thanksgiving Day
Day after Thanksgiving
Christmas Day

Paid Holidays

None

Shift Rates

When so elected by the Employer, one or more shifts of at least five days duration may be scheduled as follows: Day Shift: 8:00 am to 4:30 pm, Swing Shift 4:30 pm to 12:30 am, Graveyard Shift: 12:30 am to 8:00 am.

For multiple shifts of temporary light and/or power, the temporary light and/or power employee shall be paid for 8 hours at the straight time rate. For three or less workers performing 8 hours temporary light and/or power the supplemental benefit rate is $24.39.

Electrician "M" (First 8 hours)

"M" rated work shall be defined as jobbing: electrical work of limited duration and scope, also consisting of repairs and/or replacement of electrical and tele-data equipment. Includes all work necessary to retrofit, service, maintain and repair all kinds of lighting fixtures and local lighting controls and washing and cleaning of foregoing fixtures.

Effective Period: 7/1/2015 - 6/30/2016
Wage Rate per Hour: $27.50
Supplemental Benefit Rate per Hour: $20.82
First and Second Year "M" Wage Rate Per Hour: $23.00
First and Second Year "M" Supplemental Rate: $18.56

Electrician "M" (Overtime After First 8 hours)

"M" rated work shall be defined as jobbing: electrical work of limited duration and scope, also consisting of repairs and/or replacement of electrical and tele-data equipment. Includes all work necessary to retrofit, service, maintain and repair all kinds of lighting fixtures and local lighting controls and washing and cleaning of foregoing fixtures.

Effective Period: 7/1/2015 - 6/30/2016
Wage Rate per Hour: $41.25
Supplemental Benefit Rate per Hour: $22.54
First and Second Year "M" Wage Rate Per Hour: $34.50

First and Second Year "M" Supplemental Rate: $20.00

Overtime
Time and one half the regular rate after an 8 hour day.
Time and one half the regular rate for Saturday.
Time and one half the regular rate for Sunday.

Overtime Holidays
Time and one half the regular rate for work on the following holiday(s).
New Year's Day
Martin Luther King Jr. Day
President's Day
Memorial Day
Independence Day
Labor Day
Columbus Day
Veteran's Day
Thanksgiving Day
Day after Thanksgiving
Christmas Day

Paid Holidays
None

(Local #3)

ELECTRICIAN - ALARM TECHNICIAN
(Scope of Work - Inspect, test, repair, and replace defective, malfunctioning, or broken devices, components and controls of Fire, Burglar and Security Systems)

Alarm Technician

Effective Period: 7/1/2015 - 3/9/2016
Wage Rate per Hour: $31.40
Supplemental Benefit Rate per Hour: $14.76
Supplemental Note: $13.26 only after 8 hours worked in a day

Effective Period: 3/10/2016 - 6/30/2016
Wage Rate per Hour: $32.00
Supplemental Benefit Rate per Hour: $15.47
Supplemental Note: $13.97 only after 8 hours worked in a day

Overtime Description

Time and one half the regular rate for work on the following holidays: Columbus Day, Veterans Day, Day after Thanksgiving.
Double time the regular rate for work on the following holidays: New Year's day, Martin Luther King Jr. Day, President's Day, Memorial Day, Independence Day, Labor Day, Thanksgiving Day, Christmas Day.

Overtime

Time and one half the regular rate after an 8 hour day.
Time and one half the regular rate for Saturday.
Double time the regular rate for Sunday.

Paid Holidays

New Year's Day
Martin Luther King Jr. Day
President's Day
Memorial Day
Independence Day
Labor Day
Columbus Day
Veteran's Day
Thanksgiving Day
Day after Thanksgiving
Christmas Day

Shift Rates

Night Differential is based upon a ten percent (10%) differential between the hours of 4:00 P.M. and 12:30 A.M. and a fifteen percent (15%) differential for the hours 12:00 A.M. to 8:00 A.M.

Vacation

At least 1 year of employment.....ten (10) days
5 years or more of employment.....fifteen (15) days
10 years of employment.....twenty (20) days
Plus one Personal Day per year

Sick Days:
One day per Year. Up to 4 vacation days may be used as sick days.

(Local #3)

ELECTRICIAN-STREET LIGHTING WORKER

Electrician - Electro Pole Electrician

Effective Period: 7/1/2015 - 6/30/2016
Wage Rate per Hour: $54.00
Supplemental Benefit Rate per Hour: $51.86

Electrician - Electro Pole Foundation Installer

Effective Period: 7/1/2015 - 6/30/2016
Wage Rate per Hour: $40.93
Supplemental Benefit Rate per Hour: $39.46

Electrician - Electro Pole Maintainer

Effective Period: 7/1/2015 - 6/30/2016
Wage Rate per Hour: $35.05
Supplemental Benefit Rate per Hour: $35.51

Overtime Description
Electrician - Electro Pole Electrician: Time and one half the regular rate after a 7 hour day and after 5 consecutive days worked per week.
Electrician - Electro Pole Foundation Installer: Time and one half the regular rate after 8 hours within a 24 hour period and Saturday and Sunday.
Electrician - Electro Pole Maintainer: Time and one half the regular rate after a 7 hour day and after 5 consecutive days worked per week. Saturdays and Sundays may be used as a make-up day at straight time when a day is lost during the week to inclement weather.

Overtime Holidays
Time and one half the regular rate for work on the following holiday(s).
New Year's Day
Martin Luther King Jr. Day
President's Day
Memorial Day
Independence Day
Labor Day
Columbus Day
Veteran's Day
Thanksgiving Day
Day after Thanksgiving
Christmas Day

Paid Holidays
None

(Local #3)

ELEVATOR CONSTRUCTOR

Elevator Constructor

Effective Period: 7/1/2015 - 3/16/2016
Wage Rate per Hour: $59.55
Supplemental Benefit Rate per Hour: $31.07

Effective Period: 3/17/2016 - 6/30/2016
Wage Rate per Hour: $60.96
Supplemental Benefit Rate per Hour: $32.67

Overtime Description

For New Construction: work performed after 7 or 8 hour day, Saturday, Sunday or between 4:30pm and 7:00am shall be paid at double time rate.

Existing buildings: work performed after an 8 hour day, Saturday, Sunday or between 5:30pm and 7:00 am shall be paid time and one half.

Overtime

Double time the regular rate for work on the following holiday(s).

Paid Holidays

New Year's Day
President's Day
Good Friday
Memorial Day
Independence Day
Labor Day
Columbus Day
Veteran's Day
Thanksgiving Day
Day after Thanksgiving
Christmas Day

Vacation

Employer contributes 8% of regular basic hourly rate as vacation pay for employees with more than 15 years of service, and 6% for employees with 5 to 15 years of service, and 4% for employees with less than 5 years of service.

(Local #1)

ELEVATOR REPAIR & MAINTENANCE

Elevator Service/Modernization Mechanic

Effective Period: 7/1/2015 - 3/16/2016
Wage Rate per Hour: $46.92
Supplemental Benefit Rate per Hour: $30.91

Effective Period: 3/17/2016 - 6/30/2016
Wage Rate per Hour: $47.91
Supplemental Benefit Rate per Hour: $32.51

Overtime Description

For Scheduled Service Work: Double time - work scheduled in advance by two or more workers performed on Sundays, Holidays, and between midnight and 7:00am.

Overtime

Time and one half the regular rate after an 8 hour day.
Time and one half the regular rate for Saturday.
Time and one half the regular rate for Sunday.
Time and one half the regular rate for work on a holiday plus the day's pay.

Paid Holidays

New Year's Day
President's Day
Good Friday
Memorial Day
Independence Day
Labor Day
Columbus Day
Veteran's Day
Thanksgiving Day
Day after Thanksgiving
Christmas Day

Shift Rates

Afternoon shift - regularly hourly rate plus a (15%) fifteen percent differential. Graveyard shift - time and one half the regular rate.

Vacation

Employer contributes 8% of regular basic hourly rate as vacation pay for employees with more than 15 years of service, and 6% for employees with 5 to 15 years of service, and 4% for employees with less than 5 years of service.

(Local #1)

ENGINEER

Engineer - Heavy Construction Operating Engineer I

Cherrypickers 20 tons and over and Loaders (rubber tired and/or tractor type with a manufacturer's minimum rated capacity of six cubic yards and over).

Effective Period: 7/1/2015 - 6/30/2016
Wage Rate per Hour: $64.31
Supplemental Benefit Rate per Hour: $34.25
Supplemental Note: $61.60 on overtime
Shift Wage Rate: $102.90

Engineer - Heavy Construction Operating Engineer II

Backhoes, Basin Machines, Groover, Mechanical Sweepers, Bobcat, Boom Truck, Barrier Transport (Barrier Mover) & machines of similar nature. Operation of Churn Drills and machines of a similar nature, Stetco Silent Hoist and machines of similar nature, Vac-Alls, Meyers Machines, John Beam and machines of a similar nature, Ross Carriers and Travel Lifts and machines of a similar nature, Bulldozers, Scrapers and Turn-a-Pulls: Tugger Hoists (Used exclusively for handling excavated material); Tractors with attachments, Hyster and Roustabout Cranes, Cherrypickers. Austin Western, Grove and machines of a similar nature, Scoopmobiles, Monorails, Conveyors, Trenchers: Loaders-Rubber Tired and Tractor: Barber Greene and Eimco Loaders and Eimco Backhoes; Mighty Midget and similar breakers and Tampers, Curb and Gutter Pavers and Motor Patrol, Motor Graders and all machines of a similar nature. Locomotives 10 Tons or under. Mini-Max, Break-Tech and machines of a similar nature; Milling machines, robotic and demolition machines and machines of a similar nature, shot blaster, skid steer machines and machines of a similar nature including bobcat, pile rig rubber-tired excavator (37,000 lbs. and under), 2 man auger.

Effective Period: 7/1/2015 - 6/30/2016
Wage Rate per Hour: $62.40
Supplemental Benefit Rate per Hour: $34.25
Supplemental Note: $61.60 on overtime
Shift Wage Rate: $99.84

Engineer - Heavy Construction Operating Engineer III

Minor Equipment such as Tractors, Post Hole Diggers, Ditch Witch (Walk Behind), Road Finishing Machines, Rollers five tons and under, Tugger Hoists, Dual Purpose Trucks, Fork Lifts, and Dempsey Dumpers, Fireperson.

Effective Period: 7/1/2015 - 6/30/2016
Wage Rate per Hour: $59.20
Supplemental Benefit Rate per Hour: $34.25
Supplemental Note: $61.60 on overtime
Shift Wage Rate: $94.72

Engineer - Heavy Construction Maintenance Engineer I

Installing, Repairing, Maintaining, Dismantling and Manning of all equipment including Steel Cutting, Bending and Heat Sealing Machines, Mechanical Heaters, Grout Pumps, Bentonite Pumps & Plants, Screening Machines, Fusion Coupling Machines, Tunnel Boring Machines Moles and Machines of a similar nature, Power Packs, Mechanical Hydraulic Jacks; all drill rigs including but not limited to Churn, Rotary Caisson, Raised Bore & Drills of a similar nature; Personnel, Inspection & Safety Boats or any boats used to perform functions of same, Mine Hoists, Whirlies, all Climbing Cranes, all Tower Cranes, including but not limited to Truck Mounted and Crawler Type and machines of similar nature; Maintaining Hydraulic Drills and machines of a similar nature; Well Point System-Installation and dismantling; Burning, Welding, all Pumps regardless of size and/or motor power, except River Cofferdam Pumps and Wells Point Pumps; Motorized Buggies (three or more); equipment used in the cleaning and televising of sewers, but not limited to jet-rodder/vacuum truck, vacall/vactor, closed circuit television inspection equipment; high powered water pumps, jet pumps; screed machines and concrete finishing machines of a similar nature; vermeers.

Effective Period: 7/1/2015 - 6/30/2016
Wage Rate per Hour: $62.11
Supplemental Benefit Rate per Hour: $34.25
Supplemental Note: $61.60 on overtime
Shift Wage Rate: $99.38

Engineer - Heavy Construction Maintenance Engineer II

On Base Mounted Tower Cranes

Effective Period: 7/1/2015 - 6/30/2016
Wage Rate per Hour: $81.54
Supplemental Benefit Rate per Hour: $34.25
Supplemental Note: $61.60 on overtime
Shift Wage Rate: $130.46

Engineer - Heavy Construction Maintenance Engineer III

On Generators, Light Towers

Effective Period: 7/1/2015 - 6/30/2016
Wage Rate per Hour: $41.04
Supplemental Benefit Rate per Hour: $34.25
Supplemental Note: $61.60 on overtime
Shift Wage Rate: $65.66

Engineer - Heavy Construction Maintenance Engineer IV

On Pumps and Mixers including mud sucking

Effective Period: 7/1/2015 - 6/30/2016
Wage Rate per Hour: $42.11
Supplemental Benefit Rate per Hour: $34.25
Supplemental Note: $61.60 on overtime
Shift Wage Rate: $67.38

Engineer - Heavy Construction Oilers I

Gradalls, Cold Planer Grader, Concrete Pumps, Driving Truck Cranes, Driving and Operating Fuel and Grease Trucks.

Effective Period: 7/1/2015 - 6/30/2016
Wage Rate per Hour: $56.02
Supplemental Benefit Rate per Hour: $34.25
Supplemental Note: $61.60 on overtime
Shift Wage Rate: $89.63

Engineer - Heavy Construction Oilers II

All gasoline, electric, diesel or air operated Shovels, Draglines, Backhoes, Keystones, Pavers, Gunite Machines, Battery of Compressors, Crawler Cranes, two-person Trenching Machines.

Effective Period: 7/1/2015 - 6/30/2016
Wage Rate per Hour: $38.79
Supplemental Benefit Rate per Hour: $34.25
Supplemental Note: $61.60 on overtime
Shift Wage Rate: $62.06

Engineer - Steel Erection Maintenance Engineers

Derrick, Travelers, Tower, Crawler Tower and Climbing Cranes

Effective Period: 7/1/2015 - 6/30/2016
Wage Rate per Hour: $59.77
Supplemental Benefit Rate per Hour: $34.25
Supplemental Note: $61.60 on overtime
Shift Wage Rate: $95.63

Engineer - Steel Erection Oiler I

On a Truck Crane

Effective Period: 7/1/2015 - 6/30/2016
Wage Rate per Hour: $55.95
Supplemental Benefit Rate per Hour: $34.25
Supplemental Note: $61.60 on overtime
Shift Wage Rate: $89.52

Engineer - Steel Erection Oiler II

On a Crawler Crane

Effective Period: 7/1/2015 - 6/30/2016
Wage Rate per Hour: $42.64
Supplemental Benefit Rate per Hour: $34.25
Supplemental Note: $61.60 on overtime
Shift Wage Rate: $68.22

Overtime Description

On jobs of more than one shift, if the next shift employee fails to report for work through any cause over which the employer has no control, the employee on duty who works the next shift continues to work at the single time rate.

Overtime

Double time the regular rate after an 8 hour day.
Double time the regular time rate for Saturday.
Double time the regular rate for Sunday.
Double time the regular rate for work on the following holiday(s).

Paid Holidays

New Year's Day
Lincoln's Birthday
President's Day
Memorial Day
Independence Day
Labor Day
Columbus Day
Veteran's Day

Thanksgiving Day
Day after Thanksgiving
Christmas Day
Employees must work at least one day in the payroll week in which the holiday occurs to receive the paid holiday

---

Engineer - Building Work Maintenance Engineers I

Installing, repairing, maintaining, dismantling (of all equipment including: Steel Cutting and Bending Machines, Mechanical Heaters, Mine Hoists, Climbing Cranes, Tower Cranes, Linden Peine, Lorain, Liebherr, Mannes, or machines of a similar nature, Well Point Systems, Deep Well Pumps, Concrete Mixers with loading Device, Concrete Plants, Motor Generators when used for temporary power and lights), skid steer machines of a similar nature including bobcat.

Effective Period: 7/1/2015 - 6/30/2016
Wage Rate per Hour: $56.88
Supplemental Benefit Rate per Hour: $34.25
Supplemental Note: $61.60 on overtime

Engineer - Building Work Maintenance Engineers II

On Pumps, Generators, Mixers and Heaters

Effective Period: 7/1/2015 - 6/30/2016
Wage Rate per Hour: $44.22
Supplemental Benefit Rate per Hour: $34.25
Supplemental Note: $61.60 on overtime

Engineer - Building Work Oilers I

All gasoline, electric, diesel or air operated Gradealls: Concrete Pumps, Overhead Cranes in Power Houses: Their duties shall be to assist the Engineer in oiling, greasing and repairing of all machines; Driving Truck Cranes: Driving and Operating Fuel and Grease Trucks, Cherrypickers (hydraulic cranes) over 70,000 GVW, and machines of a similar nature.

Effective Period: 7/1/2015 - 6/30/2016
Wage Rate per Hour: $54.08
Supplemental Benefit Rate per Hour: $34.25
Supplemental Note: $61.60 on overtime

Engineer - Building Work Oilers II

Oilers on Crawler Cranes, Backhoes, Trenching Machines, Gunite Machines, Compressors (three or more in Battery).

Effective Period: 7/1/2015 - 6/30/2016
Wage Rate per Hour: $40.21
Supplemental Benefit Rate per Hour: $34.25
Supplemental Note: $61.60 on overtime

Overtime Description
On jobs of more than one shift, if an Employee fails to report for work through any cause over which the Employer has no control, the Employee on duty will continue to work at the rate of single time.

Overtime
Double time the regular rate after an 8 hour day.
Double time the regular time rate for Saturday.
Double time the regular rate for Sunday.
Double time the regular rate for work on the following holiday(s).

Paid Holidays
New Year's Day
Lincoln's Birthday
President's Day
Memorial Day
Independence Day
Labor Day
Columbus Day
Veteran's Day
Thanksgiving Day
Christmas Day
Employees must work at least one day in the payroll week in which the holiday occurs to receive the paid holiday

Shift Rates
Off Shift: double time the regular hourly rate.

(Local #15)

ENGINEER - CITY SURVEYOR AND CONSULTANT

Party Chief

Effective Period: 7/1/2015 - 6/30/2016
Wage Rate per Hour: $37.04
Supplemental Benefit Rate per Hour: $18.60
Supplemental Note: Overtime Benefit Rate - $25.45 per hour (time & one half) $32.30 per hour (double time).

Instrument Person

Effective Period: 7/1/2015 - 6/30/2016
Wage Rate per Hour: $30.59
Supplemental Benefit Rate per Hour: $18.60
Supplemental Note: Overtime Benefit Rate - $25.45 per hour (time & one half) $32.30 per hour (double time).

Rodperson

Effective Period: 7/1/2015 - 6/30/2016
Wage Rate per Hour: $26.52
Supplemental Benefit Rate per Hour: $18.60
Supplemental Note: Overtime Benefit Rate - $25.45 per hour (time & one half) $32.30 per hour (double time).

Overtime Description

Time and one half the regular rate after an 8 hour day, Time and one half the regular rate for Saturday for the first eight hours worked, Double time the regular time rate for Saturday for work performed in excess of eight hours, Double time the regular rate for Sunday and Double time the regular rate for work on a holiday.

Paid Holidays

New Year's Day
Lincoln's Birthday
President's Day
Memorial Day
Independence Day
Labor Day
Columbus Day
Veteran's Day
Thanksgiving Day
Day after Thanksgiving
Christmas Day
Employees must work at least one day in the payroll week in which the holiday occurs to receive the paid holiday

(Operating Engineer Local #15-D)

ENGINEER - FIELD (BUILDING CONSTRUCTION)
(Construction of Building Projects, Concrete Superstructures, etc.)

Field Engineer - BC Party Chief

Effective Period: 7/1/2015 - 6/30/2016
Wage Rate per Hour: $60.77
Supplemental Benefit Rate per Hour: $32.40
Supplemental Note: Overtime Benefit Rate - $45.28 per hour (time & one half) $58.15 per hour (double time).

Field Engineer - BC Instrument Person

Effective Period: 7/1/2015 - 6/30/2016
Wage Rate per Hour: $47.20
Supplemental Benefit Rate per Hour: $32.40
Supplemental Note: Overtime Benefit Rate - $45.28 per hour (time & one half) $58.15 per hour (double time).

Field Engineer - BC Rodperson

Effective Period: 7/1/2015 - 6/30/2016
Wage Rate per Hour: $30.49
Supplemental Benefit Rate per Hour: $32.40
Supplemental Note: Overtime Benefit Rate - $45.28 per hour (time & one half) $58.15 per hour (double time).

Overtime Description

Time and one half the regular rate after a 7 hour work and time and one half the regular rate for Saturday for the first seven hours worked, Double time the regular time rate for Saturday for work performed in excess of seven hours, Double time the regular rate for Sunday and Double time the regular rate for work on a holiday.

Paid Holidays

New Year's Day
President's Day
Good Friday
Memorial Day
Independence Day
Labor Day
Columbus Day
Veteran's Day
Thanksgiving Day
Christmas Day
Employees must work at least one day in the payroll week in which the holiday occurs to receive the paid holiday

(Operating Engineer Local #15-D)

ENGINEER - FIELD (HEAVY CONSTRUCTION)
(Construction of Roads, Tunnels, Bridges, Sewers, Building Foundations, Engineering Structures etc.)

Field Engineer - HC Party Chief

Effective Period: 7/1/2015 - 6/30/2016
Wage Rate per Hour: $66.43
Supplemental Benefit Rate per Hour: $32.40
Supplemental Note: Overtime benefit rate - $45.28 per hour (time & one half), $58.15 per hour (double time).

Field Engineer - HC Instrument Person

Effective Period: 7/1/2015 - 6/30/2016
Wage Rate per Hour: $48.82
Supplemental Benefit Rate per Hour: $32.40
Supplemental Note: Overtime benefit rate - $45.28 per hour (time & one half), $58.15 per hour (double time).

Field Engineer - HC Rodperson

Effective Period: 7/1/2015 - 6/30/2016
Wage Rate per Hour: $40.99
Supplemental Benefit Rate per Hour: $32.40
Supplemental Note: Overtime benefit rate - $45.28 per hour (time & one half), $58.15 per hour (double time).

Overtime Description

Time and one half the regular rate after an 8 hour day, Time and one half the regular rate for Saturday for the first eight hours worked, Double time the regular time rate for Saturday for work performed in excess of eight hours, Double time the regular rate for Sunday and Double time the regular rate for work on a holiday.

Paid Holidays

New Year's Day
Lincoln's Birthday
President's Day
Memorial Day
Independence Day
Labor Day
Columbus Day
Veteran's Day
Thanksgiving Day
Christmas Day
Employees must work at least one day in the payroll week in which the holiday occurs to receive the paid holiday

(Operating Engineer Local #15-D)

ENGINEER - FIELD (STEEL ERECTION)

Field Engineer - Steel Erection Party Chief

Effective Period: 7/1/2015 - 6/30/2016
Wage Rate per Hour: $62.26
Supplemental Benefit Rate per Hour: $32.40
Supplemental Note: Overtime benefit rate - $45.28 per hour (time & one half), $58.15 per hour (double time).

Field Engineer - Steel Erection Instrument Person

Effective Period: 7/1/2015 - 6/30/2016
Wage Rate per Hour: $48.57
Supplemental Benefit Rate per Hour: $32.40
Supplemental Note: Overtime benefit rate - $45.28 per hour (time & one half), $58.15 per hour (double time).

Field Engineer - Steel Erection Rodperson

Effective Period: 7/1/2015 - 6/30/2016

Wage Rate per Hour: $32.61
Supplemental Benefit Rate per Hour: $32.40
Supplemental Note: Overtime benefit rate - $45.28 per hour (time & one half), $58.15 per hour (double time).

Overtime Description
Time and one half the regular rate for Saturday for the first eight hours worked.
Double time the regular rate for Saturday for work performed in excess of eight hours.

Overtime
Time and one half the regular rate after an 8 hour day.
Double time the regular rate for Sunday.
Double time the regular rate for work on the following holiday(s).

Paid Holidays
New Year's Day
Lincoln's Birthday
President's Day
Memorial Day
Independence Day
Labor Day
Columbus Day
Veteran's Day
Thanksgiving Day
Christmas Day
Employees must work at least one day in the payroll week in which the holiday occurs to receive the paid holiday

(Operating Engineer Local #15-D)

ENGINEER - OPERATING

Operating Engineer - Road & Heavy Construction I

Back Filling Machines, Cranes, Mucking Machines and Dual Drum Paver.

Effective Period: 7/1/2015 - 6/30/2016
Wage Rate per Hour: $71.75
Supplemental Benefit Rate per Hour: $30.40
Supplemental Note: $55.10 overtime hours
Shift Wage Rate: $114.80

Operating Engineer - Road & Heavy Construction II

Backhoes, Power Shovels, Hydraulic Clam Shells, Steel Erection, Moles and machines of a similar nature.

Effective Period: 7/1/2015 - 6/30/2016
Wage Rate per Hour: $74.29

Supplemental Benefit Rate per Hour: $30.40
Supplemental Note: $55.10 overtime hours
Shift Wage Rate: $118.86

Operating Engineer - Road & Heavy Construction III

Mine Hoists, Cranes, etc. (Used as Mine Hoists)

Effective Period: 7/1/2015 - 6/30/2016
Wage Rate per Hour: $76.67
Supplemental Benefit Rate per Hour: $30.40
Supplemental Note: $55.10 overtime hours
Shift Wage Rate: $122.67

Operating Engineer - Road & Heavy Construction IV

Gradealls, Keystones, Cranes on land or water (with digging buckets), Bridge Cranes, Vermeer Cutter and machines of a similar nature, Trenching Machines.

Effective Period: 7/1/2015 - 6/30/2016
Wage Rate per Hour: $74.84
Supplemental Benefit Rate per Hour: $30.40
Supplemental Note: $55.10 overtime hours
Shift Wage Rate: $119.74

Operating Engineer - Road & Heavy Construction V

Pile Drivers & Rigs (employing Dock Builder foreperson): Derrick Boats, Tunnel Shovels.

Effective Period: 7/1/2015 - 6/30/2016
Wage Rate per Hour: $73.36
Supplemental Benefit Rate per Hour: $30.40
Supplemental Note: $55.10 overtime hours
Shift Wage Rate: $117.38

Operating Engineer - Road & Heavy Construction VI

Mixers (Concrete with loading attachment), Concrete Pavers, Cableways, Land Derricks, Power Houses (Low Air Pressure Units).

Effective Period: 7/1/2015 - 6/30/2016
Wage Rate per Hour: $69.69
Supplemental Benefit Rate per Hour: $30.40
Supplemental Note: $55.10 overtime hours
Shift Wage Rate: $111.50

Operating Engineer - Road & Heavy Construction VII

Barrier Movers , Barrier Transport and Machines of a Similar Nature.

Effective Period: 7/1/2015 - 6/30/2016
Wage Rate per Hour: $56.25
Supplemental Benefit Rate per Hour: $30.40
Supplemental Note: $55.10 overtime hours
Shift Wage Rate: $90.00

Operating Engineer - Road & Heavy Construction VIII

Utility Compressors

Effective Period: 7/1/2015 - 6/30/2016
Wage Rate per Hour: $43.63
Supplemental Benefit Rate per Hour: $30.40
Supplemental Note: $55.10 overtime hours
Shift Wage Rate: $55.03

Operating Engineer - Road & Heavy Construction IX

Horizontal Boring Rig

Effective Period: 7/1/2015 - 6/30/2016
Wage Rate per Hour: $66.26
Supplemental Benefit Rate per Hour: $30.40
Supplemental Note: $55.10 overtime hours
Shift Wage Rate: $106.02

Operating Engineer - Road & Heavy Construction X

Elevators (manually operated as personnel hoist).

Effective Period: 7/1/2015 - 6/30/2016
Wage Rate per Hour: $60.89
Supplemental Benefit Rate per Hour: $30.40
Supplemental Note: $55.10 overtime hours
Shift Wage Rate: $97.42

Operating Engineer - Road & Heavy Construction XI

Compressors (Portable 3 or more in battery), Driving of Truck Mounted Compressors, Well-point Pumps, Tugger Machines Well Point Pumps, Churn Drill.

Effective Period: 7/1/2015 - 6/30/2016
Wage Rate per Hour: $47.28
Supplemental Benefit Rate per Hour: $30.40
Supplemental Note: $55.10 overtime hours
Shift Wage Rate: $75.65

Operating Engineer - Road & Heavy Construction XII

All Drills and Machines of a similar nature.

Effective Period: 7/1/2015 - 6/30/2016
Wage Rate per Hour: $70.42
Supplemental Benefit Rate per Hour: $30.40
Supplemental Note: $55.10 overtime hours
Shift Wage Rate: $112.67

Operating Engineer - Road & Heavy Construction XIII

Concrete Pumps, Concrete Plant, Stone Crushers, Double Drum Hoist, Power Houses (other than above).

Effective Period: 7/1/2015 - 6/30/2016
Wage Rate per Hour: $68.19
Supplemental Benefit Rate per Hour: $30.40
Supplemental Note: $55.10 overtime hours
Shift Wage Rate: $109.10

Operating Engineer - Road & Heavy Construction XIV

Concrete Mixer

Effective Period: 7/1/2015 - 6/30/2016
Wage Rate per Hour: $65.20
Supplemental Benefit Rate per Hour: $30.40
Supplemental Note: $55.10 overtime hours
Shift Wage Rate: $104.32

Operating Engineer - Road & Heavy Construction XV

Compressors (Portable Single or two in Battery, not over 100 feet apart), Pumps (River Cofferdam) and Welding Machines, Push Button Machines, All Engines Irrespective of Power (Power-Pac) used to drive auxiliary equipment, Air, Hydraulic, etc.

Effective Period: 7/1/2015 - 6/30/2016
Wage Rate per Hour: $43.91
Supplemental Benefit Rate per Hour: $30.40
Supplemental Note: $55.10 overtime hours
Shift Wage Rate: $70.26

Operating Engineer - Road & Heavy Construction XVI

Concrete Breaking Machines, Hoists (Single Drum), Load Masters, Locomotives (over ten tons) and Dinkies over ten tons, Hydraulic Crane-Second Engineer.

Effective Period: 7/1/2015 - 6/30/2016
Wage Rate per Hour: $62.25
Supplemental Benefit Rate per Hour: $30.40
Supplemental Note: $55.10 overtime hours
Shift Wage Rate: $99.60

Operating Engineer - Road & Heavy Construction XVII

On-Site concrete plant engineer, On-site Asphalt Plant Engineer, and Vibratory console.

Effective Period: 7/1/2015 - 6/30/2016
Wage Rate per Hour: $62.74
Supplemental Benefit Rate per Hour: $30.40
Supplemental Note: $55.10 overtime hours
Shift Wage Rate: $100.38

Operating Engineer - Road & Heavy Construction XVIII

Tower Crane

Effective Period: 7/1/2015 - 6/30/2016
Wage Rate per Hour: $90.09
Supplemental Benefit Rate per Hour: $30.40
Supplemental Note: $55.10 overtime hours
Shift Wage Rate: $144.14

Operating Engineer - Paving I

Asphalt Spreaders, Autogrades (C.M.I.), Roto/Mil

Effective Period: 7/1/2015 - 6/30/2016
Wage Rate per Hour: $69.69
Supplemental Benefit Rate per Hour: $30.40
Supplemental Note: $55.10 overtime hours
Shift Wage Rate: $111.50

Operating Engineer - Paving II

Asphalt Roller

Effective Period: 7/1/2015 - 6/30/2016
Wage Rate per Hour: $67.87
Supplemental Benefit Rate per Hour: $30.40
Supplemental Note: $55.10 overtime hours
Shift Wage Rate: $108.59

Operating Engineer - Paving III

Asphalt Plants

Effective Period: 7/1/2015 - 6/30/2016
Wage Rate per Hour: $57.40
Supplemental Benefit Rate per Hour: $30.40
Supplemental Note: $55.10 overtime hours
Shift Wage Rate: $91.84

Operating Engineer - Concrete I

Cranes

Effective Period: 7/1/2015 - 6/30/2016
Wage Rate per Hour: $74.51
Supplemental Benefit Rate per Hour: $30.40
Supplemental Note: $55.10 overtime hours

Operating Engineer - Concrete II

Compressors

Effective Period: 7/1/2015 - 6/30/2016
Wage Rate per Hour: $44.25
Supplemental Benefit Rate per Hour: $30.40
Supplemental Note: $55.10 overtime hours

Operating Engineer - Concrete III

Micro-traps (Negative Air Machines), Vac-All Remediation System.

Effective Period: 7/1/2015 - 6/30/2016
Wage Rate per Hour: $59.51
Supplemental Benefit Rate per Hour: $30.40
Supplemental Note: $55.10 overtime hours

Operating Engineer - Steel Erection I

Three Drum Derricks

Effective Period: 7/1/2015 - 6/30/2016
Wage Rate per Hour: $77.40
Supplemental Benefit Rate per Hour: $30.40
Supplemental Note: $55.10 overtime hours
Shift Wage Rate: $123.84

Operating Engineer - Steel Erection II

Cranes, 2 Drum Derricks, Hydraulic Cranes, Fork Lifts and Boom Trucks.

Effective Period: 7/1/2015 - 6/30/2016
Wage Rate per Hour: $74.37
Supplemental Benefit Rate per Hour: $30.40
Supplemental Note: $55.10 overtime hours
Shift Wage Rate: $118.99

Operating Engineer - Steel Erection III

Compressors, Welding Machines.

Effective Period: 7/1/2015 - 6/30/2016
Wage Rate per Hour: $44.09
Supplemental Benefit Rate per Hour: $30.40
Supplemental Note: $55.10 overtime hours
Shift Wage Rate: $70.54

Operating Engineer - Steel Erection IV

Compressors - Not Combined with Welding Machine.

Effective Period: 7/1/2015 - 6/30/2016
Wage Rate per Hour: $41.98
Supplemental Benefit Rate per Hour: $30.40
Supplemental Note: $55.10 overtime hours
Shift Wage Rate: $67.17

Operating Engineer - Building Work I

Forklifts, Plaster (Platform machine), Plaster Bucket, Concrete Pump and all other equipment used for hoisting material.

Effective Period: 7/1/2015 - 6/30/2016
Wage Rate per Hour: $61.27
Supplemental Benefit Rate per Hour: $30.40
Supplemental Note: $55.10 overtime hours

Operating Engineer - Building Work II

Compressors, Welding Machines (Cutting Concrete-Tank Work), Paint Spraying, Sandblasting, Pumps (with the exclusion of Concrete Pumps), All Engines irrespective of Power (Power-Pac) used to drive Auxiliary Equipment, Air, Hydraulic, Jacking System, etc.

Effective Period: 7/1/2015 - 6/30/2016
Wage Rate per Hour: $45.85
Supplemental Benefit Rate per Hour: $30.40
Supplemental Note: $55.10 overtime hours

Operating Engineer - Building Work III

Double Drum

Effective Period: 7/1/2015 - 6/30/2016
Wage Rate per Hour: $69.76
Supplemental Benefit Rate per Hour: $30.40
Supplemental Note: $55.10 overtime hours

Operating Engineer - Building Work IV

Stone Derrick, Cranes, Hydraulic Cranes Boom Trucks.

Effective Period: 7/1/2015 - 6/30/2016
Wage Rate per Hour: $73.91
Supplemental Benefit Rate per Hour: $30.40
Supplemental Note: $55.10 overtime hours

Operating Engineer - Building Work V

Dismantling and Erection of Cranes, Relief Engineer.

Effective Period: 7/1/2015 - 6/30/2016
Wage Rate per Hour: $68.09
Supplemental Benefit Rate per Hour: $30.40
Supplemental Note: $55.10 overtime hours

Operating Engineer - Building Work VI

4 Pole Hoist, Single Drum Hoists.

Effective Period: 7/1/2015 - 6/30/2016
Wage Rate per Hour: $67.37
Supplemental Benefit Rate per Hour: $30.40
Supplemental Note: $55.10 overtime hours

Operating Engineer - Building Work VII

Rack & Pinion and House Cars

Effective Period: 7/1/2015 - 6/30/2016
Wage Rate per Hour: $53.54
Supplemental Benefit Rate per Hour: $30.40
Supplemental Note: $55.10 overtime hours
For New House Car projects Wage Rate per Hour $42.70

Overtime Description

On jobs of more than one shift, if an Employee fails to report for work through any cause over which the Employer has no control, the Employee on duty will continue to work at the rate of single time.

For House Cars and Rack & Pinion only: Overtime paid at time and one-half for all hours in excess of eight hours in a day, Saturday, Sunday and Holidays worked.

Overtime

Double time the regular rate after an 8 hour day.
Double time the regular time rate for Saturday.
Double time the regular rate for Sunday.
Double time the regular rate for work on the following holiday(s).

Paid Holidays

New Year's Day

Lincoln's Birthday
President's Day
Memorial Day
Independence Day
Labor Day
Columbus Day
Veteran's Day
Thanksgiving Day
Day after Thanksgiving
Christmas Day
Employees must work at least one day in the payroll week in which the holiday occurs to receive the paid holiday

Shift Rates
For Steel Erection Only: Shifts may be worked at the single time rate at other than the regular working hours (8:00 A.M. to 4:30 P.M.) on the following work ONLY: Heavy construction jobs on work below the street level, over railroad tracks and on building jobs.

(Operating Engineer Local #14)

FLOOR COVERER
(Interior vinyl composition tile, sheath vinyl linoleum and wood parquet tile including site preparation and synthetic turf not including site preparation)

Floor Coverer

Effective Period: 7/1/2015 - 6/30/2016
Wage Rate per Hour: $50.50
Supplemental Benefit Rate per Hour: $45.88

Overtime
Time and one half the regular rate after an 8 hour day.
Time and one half the regular rate for Saturday.
Double time the regular rate for Sunday.

Overtime Holidays
Double time the regular rate for work on the following holiday(s).
New Year's Day
President's Day
Memorial Day
Independence Day
Labor Day
Columbus Day
Presidential Election Day
Thanksgiving Day
Day after Thanksgiving
Christmas Day

Paid Holidays
1/2 day on Christmas Eve if work is performed in the A.M.
1/2 day on New Year's Eve if work is performed in the A.M.

Shift Rates
Two shifts may be utilized with the first shift working 8:00 A.M. to the end of the shift at the straight time of pay. The second shift will receive one hour at double time rate for the last hour of the shift. (eight for seven, nine for eight).

(Carpenters District Council)

GLAZIER
(New Construction, Remodeling, and Alteration)

Glazier

Effective Period: 7/1/2015 - 10/31/2015
Wage Rate per Hour: $43.35
Supplemental Benefit Rate per Hour: $36.59
Supplemental Note: Supplemental Benefit Overtime Rate: $45.34

Effective Period: 11/1/2015 - 6/30/2016
Wage Rate per Hour: $43.95
Supplemental Benefit Rate per Hour: $36.84
Supplemental Note: Supplemental Benefit Overtime Rate: $45.59

Overtime Description
An optional 8th hour can be worked at straight time rate. If 9th hour is worked, then both hours or more (8th & 9th or more) will be at the double time rate of pay.

Overtime
Double time the regular rate after a 7 hour day.
Double time the regular time rate for Saturday.
Double time the regular rate for Sunday.

Overtime Holidays
Double time the regular rate for work on the following holiday(s).
New Year's Day
President's Day
Memorial Day
Independence Day
Labor Day
Thanksgiving Day
Day after Thanksgiving

Christmas Day

Paid Holidays
None

Shift Rates
Shifts shall be any 7 hours beyond 4:00 P.M. for which the glazier shall receive 8 hours pay for 7 hours worked.

(Local #1281)

GLAZIER - REPAIR & MAINTENANCE
(For the Installation of Glass - All repair and maintenance work on a particular building, whenever performed, where the total cumulative contract value is under $105,000. Except where enumerated (i.e. plate glass windows) does not apply to non-residential buildings.)

Craft Jurisdiction for repair, maintenance and fabrication

Plate glass replacement, Residential glass replacement, Residential mirrors and shower doors, Storm windows and storm doors, Residential replacement windows, Herculite door repairs, Door closer repairs, Retrofit apartment house (non commercial buildings), Glass tinting.

Effective Period: 7/1/2015 - 6/30/2016
Wage Rate per Hour: $23.68
Supplemental Benefit Rate per Hour: $19.54

Overtime
Time and one half the regular rate after an 8 hour day.
Double time the regular rate for Sunday.
Time and one half the regular hourly rate after 40 hours in any work week.

Paid Holidays
New Year's Day
President's Day
Memorial Day
Independence Day
Labor Day
Thanksgiving Day
Day after Thanksgiving
Christmas Day

(Local #1281)

HEAT AND FROST INSULATOR

Heat & Frost Insulator

Effective Period: 7/1/2015 - 6/30/2016
Wage Rate per Hour: $57.38
Supplemental Benefit Rate per Hour: $37.41

Overtime Description
Double time shall be paid for supplemental benefits during overtime work.
8th hour paid at time and one half.

Overtime
Double time the regular rate after an 8 hour day.
Double time the regular time rate for Saturday.
Double time the regular rate for Sunday.

Overtime Holidays
Double time the regular rate for work on the following holiday(s).
New Year's Day
Martin Luther King Jr. Day
President's Day
Memorial Day
Independence Day
Columbus Day
Veteran's Day
Thanksgiving Day
Day after Thanksgiving
Christmas Day

Triple time the regular rate for work on the following holiday(s).
Labor Day

Paid Holidays
None

Shift Rates
The first shift shall work seven hours at the regular straight time rate. The second and third shift shall work seven hours the regular straight time hourly rate plus a fourteen percent wage and benefit premium.
Off hour work in occupied or retail buildings may be worked on weekdays with an increment of $1.00 per hour and eight hours pay for seven (7) hours worked. Double time will apply for over seven (7) hours worked on weekdays, weekends or holidays.

(Local #12)

HOUSE WRECKER
(TOTAL DEMOLITION)

House Wrecker - Tier A

On all work sites the first, second, eleventh and every third House Wrecker thereafter will be Tier A House Wreckers (i.e. 1st, 2nd, 11th, 14th etc). Other House Wreckers may be Tier B House Wreckers.

Effective Period: 7/1/2015 - 6/30/2016
Wage Rate per Hour: $35.52
Supplemental Benefit Rate per Hour: $26.86

House Wrecker - Tier B

Effective Period: 7/1/2015 - 6/30/2016
Wage Rate per Hour: $24.90
Supplemental Benefit Rate per Hour: $19.88

Overtime
Time and one half the regular rate after an 8 hour day.
Time and one half the regular rate for Saturday.
Double time the regular rate for Sunday.

Overtime Holidays
Double time the regular rate for work on the following holiday(s).
New Year's Day
President's Day
Memorial Day
Independence Day
Labor Day
Thanksgiving Day
Christmas Day

Paid Holidays
None

(Mason Tenders District Council)

IRON WORKER - ORNAMENTAL

Iron Worker - Ornamental

Effective Period: 7/1/2015 - 6/30/2016
Wage Rate per Hour: $43.20
Supplemental Benefit Rate per Hour: $47.67
Supplemental Note: Supplemental benefits are to be paid at the applicable overtime rate when overtime is in effect.

Overtime Description
Time and one half the regular rate after a 7 hour day for a maximum of two hours on any regular work day (the 8th and 9th hour) and double time shall be paid for all work on a regular work day thereafter, time and one half the regular rate for Saturday for the first seven hours of work and double time shall be paid for all work on a Saturday thereafter.

Overtime
Double time the regular rate for Sunday.

Overtime Holidays
Double time the regular rate for work on the following holiday(s).
New Year's Day
President's Day
Memorial Day
Independence Day
Labor Day
Thanksgiving Day
Christmas Day

Paid Holidays
None

Shift Rates
For off shift work - 8 hours pay for 7 hours of work. When two or three shifts are employed on a job, Monday through Friday, the workday for each shift shall be seven hours and paid for ten and one-half hours at the single time rate. When two or three shifts are worked on Saturday, Sunday or holidays, each shift shall be seven hours and paid fifteen and three-quarters hours.

(Local #580)

IRON WORKER - STRUCTURAL

Iron Worker - Structural

Effective Period: 7/1/2015 - 6/30/2016
Wage Rate per Hour: $48.75
Supplemental Benefit Rate per Hour: $67.34
Supplemental Note: Supplemental benefits are to be paid at the applicable overtime rate when overtime is in effect.

Overtime Description
Monday through Friday- the first eight hours are paid at straight time, the 9th and 10th hours are paid at time and one-half the regular rate, all additional weekday overtime is paid at double the regular rate. Saturdays- the first eight hours are paid at time and one-half the regular rate, double time thereafter. Sunday-all shifts are paid at double time.

Overtime
Time and one half the regular rate after an 8 hour day.
Time and one half the regular rate for Saturday.
Double time the regular rate for Sunday.

Overtime Holidays
Double time the regular rate for work on the following holiday(s).
New Year's Day
Good Friday
Memorial Day
Independence Day
Labor Day
Thanksgiving Day
Christmas Day

Paid Holidays
1/2 day on Christmas Eve if work is performed in the A.M.
1/2 day on New Year's Eve if work is performed in the A.M.

Shift Rates
Monday through Friday - First Shift: First eight hours are paid at straight time, the 9th & 10th hours are paid at time and a half, double time paid thereafter. Second and third Shifts: First eight hours are paid at time and one-half, double time thereafter. Saturdays: All shifts, first eight hours paid at time and one-half, double time thereafter: Sunday all shifts are paid at double time.

(Local #40 & #361)

LABORER
(Foundation, Concrete, Excavating, Street Pipe Layer and Common)

Laborer

Excavation and foundation work for buildings, heavy construction, engineering work, and hazardous waste removal in connection with the above work. Landscaping tasks in connection with heavy construction work, engineering work and building projects. Projects include, but are not limited to pollution plants, sewers, parks, subways, bridges, highways, etc.

Effective Period: 7/1/2015 - 6/30/2016
Wage Rate per Hour: $40.50

Supplemental Benefit Rate per Hour: $36.53

Overtime
Time and one half the regular rate after an 8 hour day.
Time and one half the regular rate for Saturday.
Double time the regular rate for Sunday.

Overtime Holidays
Double time the regular rate for work on the following holiday(s).
New Year's Day
Memorial Day
Independence Day
Labor Day
Columbus Day
Presidential Election Day
Thanksgiving Day
Christmas Day

Paid Holidays
Labor Day
Thanksgiving Day

Shift Rates
When two shifts are employed, single time rate shall be paid for each shift. When three shifts are found necessary, each shift shall work seven and one half hours (7 ½), but shall be paid for eight (8) hours of labor, and be permitted one half hour for lunch.

(Local #731)

LANDSCAPING
(Landscaping tasks, as well as tree pruning, tree removing, spraying and maintenance in connection with the planting of street trees and the planting of trees in city parks but not when such activities are performed as part of, or in connection with, other construction or reconstruction projects.)

Landscaper (Above 6 years experience)

Effective Period: 7/1/2015 - 6/30/2016
Wage Rate per Hour: $27.00
Supplemental Benefit Rate per Hour: $14.55

Landscaper (3 - 6 years experience)

Effective Period: 7/1/2015 - 6/30/2016

Wage Rate per Hour: $26.00
Supplemental Benefit Rate per Hour: $14.55

Landscaper (up to 3 years experience)

Effective Period: 7/1/2015 - 6/30/2016
Wage Rate per Hour: $23.50
Supplemental Benefit Rate per Hour: $14.55

Groundperson

Effective Period: 7/1/2015 - 6/30/2016
Wage Rate per Hour: $23.50
Supplemental Benefit Rate per Hour: $14.55

Tree Remover / Pruner

Effective Period: 7/1/2015 - 6/30/2016
Wage Rate per Hour: $32.00
Supplemental Benefit Rate per Hour: $14.55

Landscaper Sprayer (Pesticide Applicator)

Effective Period: 7/1/2015 - 6/30/2016
Wage Rate per Hour: $22.00
Supplemental Benefit Rate per Hour: $14.55

Watering - Plant Maintainer

Effective Period: 7/1/2015 - 6/30/2016
Wage Rate per Hour: $17.00
Supplemental Benefit Rate per Hour: $14.55

Overtime Description

For all overtime work performed, supplemental benefits shall include an additional seventy-five ($0.75) cents per hour.

Overtime

Time and one half the regular rate after an 8 hour day.
Time and one half the regular rate for Saturday.
Double time the regular rate for Sunday.
Time and one half the regular rate for work on a holiday plus the day's pay.

Paid Holidays

New Year's Day
Memorial Day
Independence Day
Labor Day
Thanksgiving Day

Christmas Day

Shift Rates

Work performed on a 4pm to 12am shift has a 15% differential. Work performed on a 12am to 8am shift has a 20% differential.

(Local #175)

MARBLE MECHANIC

Marble Setter

Effective Period: 7/1/2015 - 12/31/2015
Wage Rate per Hour: $51.53
Supplemental Benefit Rate per Hour: $35.73

Effective Period: 1/1/2016 - 6/30/2016
Wage Rate per Hour: $51.89
Supplemental Benefit Rate per Hour: $36.62

Marble Finisher

Effective Period: 7/1/2015 - 12/31/2015
Wage Rate per Hour: $40.53
Supplemental Benefit Rate per Hour: $34.52

Effective Period: 1/1/2016 - 6/30/2016
Wage Rate per Hour: $40.80
Supplemental Benefit Rate per Hour: $35.15

Marble Polisher

Effective Period: 7/1/2015 - 12/31/2015
Wage Rate per Hour: $36.65
Supplemental Benefit Rate per Hour: $26.63

Effective Period: 1/1/2016 - 6/30/2016
Wage Rate per Hour: $37.02
Supplemental Benefit Rate per Hour: $27.01

Overtime Description

Supplemental Benefit contributions are to be made at the applicable overtime rates. Time and one half the regular rate after a 7 hour day or time and one half the regular rate after an 8 hour day - chosen by Employer at the start of the project and then would last for the full duration of the project.

Overtime
Time and one half the regular rate for Saturday.
Double time the regular rate for Sunday.

Overtime Holidays
Double time the regular rate for work on the following holiday(s).
New Year's Day
President's Day
Good Friday
Memorial Day
Independence Day
Labor Day
Columbus Day
Veteran's Day
Thanksgiving Day
Day after Thanksgiving
Christmas Day

Paid Holidays
None

(Local #7)

MASON TENDER

Mason Tender

Effective Period: 7/1/2015 - 6/30/2016
Wage Rate per Hour: $36.67
Supplemental Benefit Rate per Hour: $28.02

Overtime
Time and one half the regular rate after an 8 hour day.
Time and one half the regular rate for Saturday.
Double time the regular rate for Sunday.
Saturday may be used as a make-up day at straight time when a day is lost during that week to inclement weather.

Overtime Holidays
Double time the regular rate for work on the following holiday(s).
New Year's Day
President's Day
Memorial Day
Independence Day
Labor Day
Thanksgiving Day
Christmas Day

Paid Holidays
None

Shift Rates
The Employer may work two (2) shifts with the first shift at the straight time wage rate and the second shift receiving eight (8) hours paid for seven (7) hours work at the straight time wage rate.

(Local #79)

MASON TENDER (INTERIOR DEMOLITION WORKER)
(The erection, building, moving, servicing and dismantling of enclosures, scaffolding, barricades, protection and site safety structures etc., on Interior Demolition jobs.)

Mason Tender Tier A

Effective Period: 7/1/2015 - 6/30/2016
Wage Rate per Hour: $35.46
Supplemental Benefit Rate per Hour: $22.13

Mason Tender Tier B

On Interior Demolition job sites 33 1/3 % of the employees shall be classified as Tier A Interior Demolition Workers and 66 2/3 % shall be classified as Tier B Interior Demolition Workers; provided that the employer may employ more than 33 1/3 % Tier A Interior Demolition Workers on the job site. Where the number of employees on a job site is not divisible by 3, the first additional employee (above the number of employees divisible by three) shall be a Tier B Interior Demolition Worker, and the second additional employee shall be a Tier A Interior Demolition Worker.

Effective Period: 7/1/2015 - 6/30/2016
Wage Rate per Hour: $24.65
Supplemental Benefit Rate per Hour: $16.45

Overtime
Time and one half the regular rate after an 8 hour day.
Time and one half the regular rate for Sunday.

Overtime Holidays
Double time the regular rate for work on the following holiday(s).
New Year's Day
President's Day
Memorial Day
Independence Day

Labor Day
Thanksgiving Day
Christmas Day

Paid Holidays
None

(Local #79)

METALLIC LATHER

Metallic Lather

Effective Period: 7/1/2015 - 6/30/2016
Wage Rate per Hour: $43.63
Supplemental Benefit Rate per Hour: $41.57
Supplemental Note: Supplemental benefits for overtime are paid at the appropriate overtime rate.

Overtime Description
Overtime would be time and one half the regular rate after a seven (7) or eight (8) hours workday, which would be set at the start of the job.

Overtime
Time and one half the regular rate for Saturday.
Double time the regular rate for Sunday.

Overtime Holidays
Double time the regular rate for work on the following holiday(s).
New Year's Day
Washington's Birthday
Good Friday
Memorial Day
Independence Day
Labor Day
Columbus Day
Presidential Election Day
Thanksgiving Day
Christmas Day

Paid Holidays
1/2 day on Christmas Eve if work is performed in the A.M.
1/2 day on New Year's Eve if work is performed in the A.M.

Shift Rates
There shall be either two (2) or three (3) shifts, each shift shall be eight (8) hours with nine (9) hours pay, including one half (½) hour for lunch. Off-Hour Start shall commence after 3:30 P.M. and shall conclude by 6:00

A.M. The first consecutive seven (7) hours shall be at straight time with a differential of twelve dollars ($12.00) per hour. Fringes shall be paid at the straight time rate.

(Local #46)

MILLWRIGHT

Millwright

Effective Period: 7/1/2015 - 6/30/2016
Wage Rate per Hour: $49.50
Supplemental Benefit Rate per Hour: $52.01

Overtime
Time and one half the regular rate after an 8 hour day.
Time and one half the regular rate for Saturday.
Double time the regular rate for Sunday.
Saturday may be used as a make-up day at straight time when a day is lost during that week to inclement weather.

Overtime Holidays
Double time the regular rate for work on the following holiday(s).
New Year's Day
President's Day
Good Friday
Memorial Day
Independence Day
Labor Day
Columbus Day
Presidential Election Day
Thanksgiving Day
Christmas Day

Paid Holidays
1/2 day on Christmas Eve if work is performed in the A.M.
1/2 day on New Year's Eve if work is performed in the A.M.

Shift Rates
The first shift shall receive the straight time rate of pay. The second shift receives the straight time rate of pay plus fifteen (15%) per cent. Members of the second shift shall be allowed one half hour to eat, with this time being included in the hours of the workday established. There must be a first shift to work a second shift. All additional hours worked shall be paid at the time and one-half rate of pay plus fifteen (15%) per cent for weekday hours.

(Local #740)

MOSAIC MECHANIC

Mosaic Mechanic - Mosaic & Terrazzo Mechanic

Effective Period: 7/1/2015 - 6/30/2016
Wage Rate per Hour: $45.91
Supplemental Benefit Rate per Hour: $38.15
Supplemental Note: Supplemental benefits for overtime to be paid at the rate of $48.92 per hour.

Mosaic Mechanic - Mosaic & Terrazzo Finisher

Effective Period: 7/1/2015 - 6/30/2016
Wage Rate per Hour: $44.30
Supplemental Benefit Rate per Hour: $38.14
Supplemental Note: Supplemental benefits for overtime to be paid at the rate of $48.91 per hour.

Mosaic Mechanic - Machine Operator Grinder

Effective Period: 7/1/2015 - 6/30/2016
Wage Rate per Hour: $44.30
Supplemental Benefit Rate per Hour: $38.14
Supplemental Note: Supplemental benefits for overtime to be paid at the rate of $48.91 per hour.

Overtime
Time and one half the regular rate after a 7 hour day.
Time and one half the regular rate for Saturday.
Double time the regular rate for Sunday.

Overtime Holidays
Double time the regular rate for work on the following holiday(s).
New Year's Day
Washington's Birthday
Good Friday
Independence Day
Labor Day
Columbus Day
Veteran's Day
Thanksgiving Day
Day after Thanksgiving
Christmas Day

Paid Holidays
None

(Local #7)

PAINTER

Painter - Brush & Roller

Effective Period: 7/1/2015 - 6/30/2016
Wage Rate per Hour: $41.00
Supplemental Benefit Rate per Hour: $26.37
Supplemental Note: $31.00 on overtime

Spray & Scaffold / Decorative / Sandblast

Effective Period: 7/1/2015 - 6/30/2016
Wage Rate per Hour: $44.00
Supplemental Benefit Rate per Hour: $26.37
Supplemental Note: $31.00 on overtime

Overtime
Time and one half the regular rate after a 7 hour day.
Time and one half the regular rate for Saturday.
Time and one half the regular rate for Sunday.

Overtime Holidays
Time and one half the regular rate for work on the following holiday(s).
New Year's Day
President's Day
Memorial Day
Independence Day
Labor Day
Columbus Day
Thanksgiving Day
Christmas Day

Paid Holidays
None

(District Council of Painters #9)

PAINTER - SIGN

Designer

Effective Period: 7/1/2015 - 6/30/2016
Wage Rate per Hour: $40.30
Supplemental Benefit Rate per Hour: $7.22

Journeyperson

Effective Period: 7/1/2015 - 6/30/2016
Wage Rate per Hour: $37.48
Supplemental Benefit Rate per Hour: $7.22

Overtime
Time and one half the regular rate after an 8 hour day.
Time and one half the regular rate for Saturday.
Time and one half the regular rate for Sunday.
Double time the regular rate for work on the following holiday(s).

Paid Holidays
New Year's Day
Martin Luther King Jr. Day
Memorial Day
Independence Day
Labor Day
Thanksgiving Day
Day after Thanksgiving
Christmas Day
Two (2) additional holidays as floating holidays

(Local #8A-28A)

PAINTER - STRIPER

Striper (paint)

Effective Period: 7/1/2015 - 6/30/2016
Wage Rate per Hour: $35.00
Supplemental Benefit Rate per Hour: $12.27
Supplemental Note: Overtime Supplemental Benefit rate - $8.02 New Hire Rate (0-3 months) - $0.00

Lineperson (thermoplastic)

Effective Period: 7/1/2015 - 6/30/2016
Wage Rate per Hour: $39.00
Supplemental Benefit Rate per Hour: $12.27
Supplemental Note: Overtime Supplemental Benefit rate - $8.02; New Hire Rate (0-3 months) - $0.00

Overtime

Time and one half the regular rate after an 8 hour day.
Time and one half the regular rate for Saturday.
Double time the regular rate for Sunday.
Time and one half the regular rate for work on the following holiday(s).

Paid Holidays

New Year's Day
Good Friday
Memorial Day
Independence Day
Labor Day
Columbus Day
Presidential Election Day
Thanksgiving Day
Day after Thanksgiving
Christmas Day

Shift Rates

Employees hired before April 1, 2003: 15% night shift premium differential for work commenced at 9:00 PM or later.

Vacation

Employees with one to two years service shall accrue vacation based on hours worked: 250 hours worked - 1 day vacation; 500 hours worked - 2 days vacation; 750 hours worked - 3 days vacation; 900 hours worked - 4 days vacation; 1,000 hours worked - 5 days vacation. Employees with two to five years service receive two weeks vacation. Employees with five to twenty years service receive three weeks vacation. Employees with twenty to twenty-five years service receive four weeks vacation. Employees with 25 or more years service receive five weeks vacation. Vacation must be taken during winter months. 2 Personal Days except employees hired after 4/1/12 who do not have 2 years of service.

(Local #917)

PAINTER - STRUCTURAL STEEL

Painters on Structural Steel

Effective Period: 7/1/2015 - 9/30/2015
Wage Rate per Hour: $48.00
Supplemental Benefit Rate per Hour: $34.58

Effective Period: 10/1/2015 - 6/30/2016
Wage Rate per Hour: $49.00
Supplemental Benefit Rate per Hour: $36.08

Painter - Power Tool

Effective Period: 7/1/2015 - 9/30/2015
Wage Rate per Hour: $54.00
Supplemental Benefit Rate per Hour: $34.58

Effective Period: 10/1/2015 - 6/30/2016
Wage Rate per Hour: $55.00
Supplemental Benefit Rate per Hour: $36.08

Overtime Description
Supplemental Benefits shall be paid for each hour worked, up to forty (40) hours per week for the period of May 1st to November 15th or up to fifty (50) hours per week for the period of November 16th to April 30th.

Overtime
Time and one half the regular rate after a 7 hour day.
Time and one half the regular rate for Saturday.
Time and one half the regular rate for Sunday.

Overtime Holidays
Double time the regular rate for work on the following holiday(s).
New Year's Day
Memorial Day
Independence Day
Labor Day
Thanksgiving Day
Christmas Day

Paid Holidays
None

Shift Rates
Regular hourly rates plus a ten per cent (10%) differential

(Local #806)

PAPERHANGER

Paperhanger

Effective Period: 7/1/2015 - 6/30/2016
Wage Rate per Hour: $41.08
Supplemental Benefit Rate per Hour: $29.23
Supplemental Note: Supplemental benefits are to be paid at the appropriate straight time and overtime rate.

Overtime
Time and one half the regular rate after a 7 hour day.

Time and one half the regular rate for Saturday.
Time and one half the regular rate for Sunday.

Overtime Holidays

Time and one half the regular rate for work on the following holiday(s).
New Year's Day
President's Day
Memorial Day
Independence Day
Labor Day
Thanksgiving Day
Day after Thanksgiving
Christmas Day

Paid Holidays

None

Shift Rates

Evening shift - 4:30 P.M. to 12:00 Midnight (regular rate of pay); any work performed before 7:00 A.M. shall be at time and one half the regular base rate of pay.

(District Council of Painters #9)

PAVER AND ROADBUILDER

Paver & Roadbuilder - Formsetter

Effective Period: 7/1/2015 - 6/30/2016
Wage Rate per Hour: $44.85
Supplemental Benefit Rate per Hour: $36.92

Paver & Roadbuilder - Laborer

Paving and road construction work, regardless of material used, including but not limited to preparation of job sites, removal of old surfaces, asphalt and/or concrete, by whatever method, including but not limited to milling; laying of concrete; laying of asphalt for temporary, patchwork, and utility paving (but not production paving); site preparation and incidental work before the installation of rubberized materials and similar surfaces; installation and repair of temporary construction fencing; slurry seal coating, maintenance of safety surfaces; play equipment installation, and other related work.

Effective Period: 7/1/2015 - 6/30/2016
Wage Rate per Hour: $40.98
Supplemental Benefit Rate per Hour: $36.92

Production Paver & Roadbuilder - Screed Person

(Production paving is asphalt paving when using a paving machine or on a project where a paving machine is traditionally used)

Adjustment of paving machinery on production paving jobs.

Effective Period: 7/1/2015 - 6/30/2016
Wage Rate per Hour: $45.45
Supplemental Benefit Rate per Hour: $36.92

Production Paver & Roadbuilder - Raker

Effective Period: 7/1/2015 - 6/30/2016
Wage Rate per Hour: $44.85
Supplemental Benefit Rate per Hour: $36.92

Production Paver & Roadbuilder - Shoveler

General laborer (except removal of surfaces - see Paver and Roadbuilder-Laborer) including but not limited to tamper, AC paint and liquid tar work.

Effective Period: 7/1/2015 - 6/30/2016
Wage Rate per Hour: $41.56
Supplemental Benefit Rate per Hour: $36.92

Overtime Description

Veteran's Day is a Paid Holiday for employees working on production paving.

If an employee works New Year's Day or Christmas Day, they receive the single time rate plus 25%.

Employees who work on a holiday listed below receive the straight time rate plus one day's pay for the holiday.

Overtime

Time and one half the regular rate after an 8 hour day.
Time and one half the regular rate for Saturday.
Double time the regular rate for Sunday.

Paid Holidays

Memorial Day
Independence Day
Labor Day
Presidential Election Day
Thanksgiving Day

Shift Rates

When two shifts are employed, the work period for each shift shall be a continuous eight (8) hours. When three shifts are employed, each shift will work seven and one half (7 ½) hours but will be paid for eight (8) hours since only one half (1/2) hour is allowed for meal time.
When two or more shifts are employed, single time will be paid for each shift.

Night Work - On night work, the first eight (8) hours of work will be paid for at the single time rate, except that production paving work shall be paid at 15% over the single time rate for the screed person, rakers and

shovelers directly involved only. All other workers will be exempt. Hours worked over eight (8) hours during said shift shall be paid for at the time and one-half rate.

(Local #1010)

PLASTERER

Plasterer

Effective Period: 7/1/2015 - 6/30/2016
Wage Rate per Hour: $43.43
Supplemental Benefit Rate per Hour: $27.95

Overtime
Time and one half the regular rate after a 7 hour day.
Time and one half the regular rate for Saturday.
Double time the regular rate for Sunday.
Saturday may be used as a make-up day at straight time when a day is lost during that week to inclement weather.

Overtime Holidays
Double time the regular rate for work on the following holiday(s).
New Year's Day
Martin Luther King Jr. Day
President's Day
Good Friday
Memorial Day
Independence Day
Labor Day
Columbus Day
Presidential Election Day
Thanksgiving Day
Christmas Day

Paid Holidays
None

Shift Rates
When it is not possible to conduct alteration work during regular work hours, in a building occupied by tenants, said work shall proceed on a shift basis: however work over seven (7) hours in any twenty four (24) hour period, the time after seven (7) hours shall be considered overtime.
The second shift shall start at a time between 3:30 p.m. and 7:00 p.m. and shall consist of seven (7) working hours and shall receive eight (8) hours of wages and benefits at the straight time rate. The workers on the second shift shall be allowed one-half (½) hour to eat with this time being included in the seven (7) hours of work.

(Local #530)

PLASTERER - TENDER

Plasterer - Tender

Effective Period: 7/1/2015 - 6/30/2016
Wage Rate per Hour: $36.67
Supplemental Benefit Rate per Hour: $28.02

Overtime
Time and one half the regular rate after an 8 hour day.
Time and one half the regular rate for Saturday.
Double time the regular rate for Sunday.
Saturday may be used as a make-up day at straight time when a day is lost during that week to inclement weather.

Overtime Holidays
Double time the regular rate for work on the following holiday(s).
New Year's Day
Washington's Birthday
Memorial Day
Independence Day
Labor Day
Presidential Election Day
Thanksgiving Day
Christmas Day

Paid Holidays
None

Shift Rates
When work commences outside regular work hours, workers receive an hour additional (differential) wage and supplement payment. Eight hours pay for seven hours work or nine hours pay for eight hours work.

(Mason Tenders District Council)

PLUMBER

Plumber

Effective Period: 7/1/2015 - 6/30/2016

Wage Rate per Hour: $65.27
Supplemental Benefit Rate per Hour: $28.38
Supplemental Note: Overtime supplemental benefit rate per hour: $56.48

Plumber - Temporary Services

Temporary Services - When there are no Plumbers on the job site, there may be three shifts designed to cover the entire twenty-four hour period, including weekends if necessary, at the following rate straight time.

Effective Period: 7/1/2015 - 6/30/2016
Wage Rate per Hour: $52.24
Supplemental Benefit Rate per Hour: $22.28

Overtime Description
Double time the regular rate after a 7 hour day - unless for new construction site work where the plumbing contract price is $1.5 million or less, the hours of labor can be 8 hours per day at the employers option. On Alteration jobs when other mechanical trades at the site are working an eighth hour at straight time, then the plumber shall also work an eighth hour at straight time.

Overtime
Double time the regular time rate for Saturday.
Double time the regular rate for Sunday.

Overtime Holidays
Double time the regular rate for work on the following holiday(s).
New Year's Day
President's Day
Memorial Day
Independence Day
Labor Day
Columbus Day
Veteran's Day
Thanksgiving Day
Day after Thanksgiving
Christmas Day

Shift Rates
Shift work, when directly specified in public agency or authority documents where plumbing contract is $8 million or less, will be permitted. 30% shift premium shall be paid for wages and fringe benefits for 4:00 pm and midnight shifts Monday to Friday. 50% shift premium shall be paid for wages and fringe benefits for 4:00 pm and midnight shift work performed on weekends. For shift work on holidays, double time wages and fringe benefits shall be paid.

(Plumbers Local #1)

PLUMBER (MECHNICAL EQUIPMENT AND SERVICE)

(Mechanical Equipment and Service work shall include any repair and/or replacement of the present plumbing system.)

Plumber

Effective Period: 7/1/2015 - 6/30/2016
Wage Rate per Hour: $39.27
Supplemental Benefit Rate per Hour: $13.34

Overtime
Time and one half the regular rate after an 8 hour day.
Time and one half the regular rate for Saturday.
Time and one half the regular rate for Sunday.

Overtime Holidays
Time and one half the regular rate for work on the following holiday(s).
New Year's Day
President's Day
Memorial Day
Independence Day
Thanksgiving Day
Day after Thanksgiving
Christmas Day

Paid Holidays
None

(Plumbers Local # 1)

PLUMBER (RESIDENTIAL RATES FOR 1, 2 AND 3 FAMILY HOME CONSTRUCTION)

Effective Period: 7/1/2015 - 6/30/2016
Wage Rate per Hour: $45.19
Supplemental Benefit Rate per Hour: $20.62

Overtime
Double time the regular rate after an 8 hour day.
Double time the regular time rate for Saturday.
Double time the regular rate for Sunday.

Overtime Holidays

Double time the regular rate for work on the following holiday(s).
New Year's Day
President's Day
Memorial Day
Independence Day
Labor Day
Columbus Day
Veteran's Day
Thanksgiving Day
Day after Thanksgiving
Christmas Day

Paid Holidays
None

Shift Rates
30% shift premium shall be paid for wages and fringe benefits for 4:00 pm and midnight shifts Monday to Friday. 50% shift premium shall be paid for wages and fringe benefits for 4:00 pm and midnight shift work performed on weekends. For shift work on holidays, double time wages and fringe benefits shall be paid.

(Plumbers Local #1)

PLUMBER: PUMP & TANK
Oil Trades (Installation and Maintenance)

Plumber - Pump & Tank

Effective Period: 7/1/2015 - 6/30/2016
Wage Rate per Hour: $62.83
Supplemental Benefit Rate per Hour: $21.37

Overtime
Time and one half the regular rate after an 8 hour day.
Time and one half the regular rate for Saturday.
Time and one half the regular rate for Sunday.

Overtime Holidays
Time and one half the regular rate for work on the following holiday(s).
New Year's Day
President's Day
Memorial Day
Independence Day
Labor Day
Columbus Day
Veteran's Day
Thanksgiving Day

Day after Thanksgiving
Christmas Day

Paid Holidays
None

Shift Rates
All work outside the regular workday (8:00 A.M. to 3:30 P.M.) is to be paid at time and one half the regular hourly rate

(Plumbers Local #1)

POINTER - WATERPROOFER, CAULKER MECHANIC (EXTERIOR BUILDING RENOVATION)

Pointer - Waterproofer, Caulker Mechanic

Effective Period: 7/1/2015 - 6/30/2016
Wage Rate per Hour: $47.41
Supplemental Benefit Rate per Hour: $24.40

Overtime
Time and one half the regular rate after an 8 hour day.
Time and one half the regular rate for Saturday.
Time and one half the regular rate for Sunday.
Saturday may be used as a make-up day at straight time when a day is lost during that week to inclement weather.

Overtime Holidays
Time and one half the regular rate for work on the following holiday(s).
New Year's Day
Martin Luther King Jr. Day
President's Day
Memorial Day
Independence Day
Labor Day
Thanksgiving Day
Christmas Day

Paid Holidays
None

Shift Rates
All work outside the regular work day (an eight hour workday between the hours of 6:00 A.M. and 4:30 P.M.) is to be paid at time and one half the regular rate.

(Bricklayer District Council)

ROOFER

Roofer

Effective Period: 7/1/2015 - 6/30/2016
Wage Rate per Hour: $40.70
Supplemental Benefit Rate per Hour: $30.17

Overtime
Time and one half the regular rate after an 8 hour day.
Time and one half the regular rate for Saturday.
Time and one half the regular rate for Sunday.

Overtime Holidays
Time and one half the regular rate for work on the following holiday(s).
New Year's Day
President's Day
Memorial Day
Independence Day
Labor Day
Presidential Election Day
Thanksgiving Day
Christmas Day

Paid Holidays
None

Shift Rates
Second shift - Regular hourly rate plus a 10% differential. Third shift - Regular hourly rate plus a 15% differential.

(Local #8)

SANDBLASTER - STEAMBLASTER
(Exterior Building Renovation)

Sandblaster / Steamblaster

Effective Period: 7/1/2015 - 6/30/2016

Wage Rate per Hour: $47.41
Supplemental Benefit Rate per Hour: $24.40

Overtime
Time and one half the regular rate after an 8 hour day.
Time and one half the regular rate for Saturday.
Time and one half the regular rate for Sunday.
Saturday may be used as a make-up day at straight time when a day is lost during that week to inclement weather.

Overtime Holidays
Time and one half the regular rate for work on the following holiday(s).
New Year's Day
Martin Luther King Jr. Day
President's Day
Memorial Day
Independence Day
Labor Day
Thanksgiving Day
Christmas Day

Paid Holidays
None

Shift Rates
All work outside the regular work day (an eight hour workday between the hours of 6:00 A.M. and 4:30 P.M.) is to be paid at time and one half the regular rate.

(Bricklayer District Council)

SHEET METAL WORKER

Sheet Metal Worker

Effective Period: 7/1/2015 - 6/30/2016
Wage Rate per Hour: $46.96
Supplemental Benefit Rate per Hour: $45.19
Supplemental Note: Supplemental benefit contributions are to be made at the applicable overtime rates.

Sheet Metal Worker - Fan Maintenance

(The temporary operation of fans or blowers in new or existing buildings for heating and/or ventilation, and/or air conditioning prior to the completion of the project.)

Effective Period: 7/1/2015 - 6/30/2016
Wage Rate per Hour: $37.57

Supplemental Benefit Rate per Hour: $45.19

Sheet Metal Worker - Duct Cleaner

Effective Period: 7/1/2015 - 6/30/2016
Wage Rate per Hour: $12.90
Supplemental Benefit Rate per Hour: $8.07

Overtime
Time and one half the regular rate after a 7 hour day.
Time and one half the regular rate for Saturday.
Double time the regular rate for Sunday.

Overtime Holidays
Double time the regular rate for work on the following holiday(s).
New Year's Day
Martin Luther King Jr. Day
President's Day
Memorial Day
Independence Day
Labor Day
Columbus Day
Veteran's Day
Thanksgiving Day
Day after Thanksgiving
Christmas Day

Paid Holidays
None

Shift Rates
Work that can only be performed outside regular working hours (seven hours of work between 7:30 A.M. and 3:30 P.M.) - First shift (work between 3:30 P.M. and 11:30 P.M.) - 10% differential above the established hourly rate. Second shift (work between 11:30 P.M. and 7:30 A.M.) - 15% differential above the established hourly rate.

For Fan Maintenance: On all full shifts of fan maintenance work the straight time hourly rate of pay will be paid for each shift, including nights, Saturdays, Sundays, and holidays.

(Local #28)

SHEET METAL WORKER - SPECIALTY
(Decking & Siding)

Sheet Metal Specialty Worker

The first worker to perform this work must be paid at the rate of the Sheet Metal Worker. The second and third workers shall be paid the Specialty Worker Rate. The ratio of One Sheet Metal Worker, then Two Specialty Workers shall be utilized thereafter.

Effective Period: 7/1/2015 - 6/30/2016
Wage Rate per Hour: $42.64
Supplemental Benefit Rate per Hour: $23.62
Supplemental Note: Supplemental benefit contributions are to be made at the applicable overtime rates.

Overtime
Time and one half the regular rate after an 8 hour day.
Time and one half the regular rate for Saturday.
Double time the regular rate for Sunday.

Overtime Holidays
Double time the regular rate for work on the following holiday(s).
New Year's Day
Martin Luther King Jr. Day
President's Day
Memorial Day
Independence Day
Labor Day
Columbus Day
Veteran's Day
Thanksgiving Day
Christmas Day

Paid Holidays
None

(Local #28)

SHIPYARD WORKER

Shipyard Mechanic - First Class

Effective Period: 7/1/2015 - 6/30/2016
Wage Rate per Hour: $27.54
Supplemental Benefit Rate per Hour: $3.01

Shipyard Mechanic - Second Class

Effective Period: 7/1/2015 - 6/30/2016
Wage Rate per Hour: $20.22
Supplemental Benefit Rate per Hour: $2.73

Shipyard Laborer - First Class

Effective Period: 7/1/2015 - 6/30/2016
Wage Rate per Hour: $20.90
Supplemental Benefit Rate per Hour: $2.75

Shipyard Laborer - Second Class

Effective Period: 7/1/2015 - 6/30/2016
Wage Rate per Hour: $13.86
Supplemental Benefit Rate per Hour: $2.48

Shipyard Dockhand - First Class

Effective Period: 7/1/2015 - 6/30/2016
Wage Rate per Hour: $23.61
Supplemental Benefit Rate per Hour: $2.86

Shipyard Dockhand - Second Class

Effective Period: 7/1/2015 - 6/30/2016
Wage Rate per Hour: $15.94
Supplemental Benefit Rate per Hour: $2.56

Overtime Description
Work performed on holiday is paid double time the regular hourly wage rate plus holiday pay.

Overtime
Time and one half the regular rate after an 8 hour day.
Time and one half the regular rate for Saturday.
Double time the regular rate for Sunday.
Time and one half the regular hourly rate after 40 hours in any work week.

Paid Holidays
New Year's Day
Martin Luther King Jr. Day
President's Day
Good Friday
Memorial Day
Independence Day
Labor Day
Thanksgiving Day
Day after Thanksgiving
Christmas Day

Based on Survey Data

SIGN ERECTOR
(Sheet Metal, Plastic, Electric, and Neon)

Sign Erector

Effective Period: 7/1/2015 - 6/30/2016
Wage Rate per Hour: $45.60
Supplemental Benefit Rate per Hour: $46.28

Overtime
Time and one half the regular rate after a 7 hour day.
Time and one half the regular rate for Saturday.
Time and one half the regular rate for Sunday.
Time and one half the regular rate for work on the following holiday(s).

Paid Holidays
New Year's Day
Washington's Birthday
Memorial Day
Independence Day
Labor Day
Columbus Day
Election Day
Thanksgiving Day
Day after Thanksgiving
Christmas Day

Shift Rates
Time and one half the regular hourly rate is to be paid for all hours worked outside the regular workday either (7:00 A.M. through 2:30 P.M.) or (8:00 A.M. through 3:30 P.M.)

(Local #137)

STEAMFITTER

Steamfitter I

Effective Period: 7/1/2015 - 6/30/2016
Wage Rate per Hour: $55.00
Supplemental Benefit Rate per Hour: $52.79
Supplemental Note: Overtime supplemental benefit rate: $104.84

Steamfitter -Temporary Services

The steamfitters shall not do any other work and shall not be permitted to work more than one shift in a twenty-four hour day. When steamfitters are present during the regular working day, no temporary services steamfitter will be required

Effective Period: 7/1/2015 - 6/30/2016
Wage Rate per Hour: $41.80
Supplemental Benefit Rate per Hour: $42.76
Supplemental Note: .

Overtime
Double time the regular rate after a 7 hour day.
Double time the regular time rate for Saturday.
Double time the regular rate for Sunday.

Overtime Holidays
Double time the regular rate for work on the following holiday(s).
New Year's Day
President's Day
Memorial Day
Independence Day
Labor Day
Columbus Day
Veteran's Day
Thanksgiving Day
Day after Thanksgiving
Christmas Day

Paid Holidays
None

Shift Rates
Work performed between 3:30 P.M. and 7:00 A.M. and on Saturdays, Sundays and Holidays shall be at double time the regular hourly rate and paid at the overtime supplemental benefit rate above.

Steamfitter II

For heating, ventilation, air conditioning and mechanical public works contracts with a dollar value not to exceed $15,000,000 and for fire protection/sprinkler public works contracts not to exceed $1,500,000.

Effective Period: 7/1/2015 - 6/30/2016
Wage Rate per Hour: $55.00
Supplemental Benefit Rate per Hour: $52.79
Supplemental Note: Overtime supplemental benefit rate: $104.84

Steamfitter -Temporary Services

The steamfitters shall not do any other work and shall not be permitted to work more than one shift in a twenty-four hour day. When steamfitters are present during the regular working day, no temporary services steamfitter will be required.

Effective Period: 7/1/2015 - 6/30/2016
Wage Rate per Hour: $41.80
Supplemental Benefit Rate per Hour: $42.76

Overtime
Double time the regular rate after an 8 hour day.
Double time the regular time rate for Saturday.
Double time the regular rate for Sunday.

Overtime Holidays
Double time the regular rate for work on the following holiday(s).
New Year's Day
President's Day
Memorial Day
Independence Day
Labor Day
Columbus Day
Veteran's Day
Thanksgiving Day
Day after Thanksgiving
Christmas Day

Paid Holidays
None

Shift Rates
May be performed outside of the regular workday except Saturday, Sunday and Holidays. A shift shall consist of eight working hours. All work performed in excess of eight hours shall be paid at double time. No shift shall commence after 7:00 P.M. on Friday or 7:00 P.M. the day before holidays. All work performed after 12:01 A.M. Saturday or 12:01 A.M. the day before a Holiday will be paid at double time. When shift work is performed the wage rate for regular time worked is a thirty percent premium together with fringe benefits.

On Transit Authority projects, where work is performed in the vicinity of tracks all shift work on weekends and holidays may be performed at the regular shift rates.

Local #638

STEAMFITTER - REFRIGERATION AND AIR CONDITIONER
(Maintenance and Installation Service Person)

Refrigeration and Air Conditioner Mechanic

Effective Period: 7/1/2015 - 6/30/2016
Wage Rate per Hour: $39.25
Supplemental Benefit Rate per Hour: $13.81

Refrigeration and Air Conditioner Service Person V

Effective Period: 7/1/2015 - 6/30/2016
Wage Rate per Hour: $32.25
Supplemental Benefit Rate per Hour: $12.44

Refrigeration and Air Conditioner Service Person IV

Effective Period: 7/1/2015 - 6/30/2016
Wage Rate per Hour: $26.72
Supplemental Benefit Rate per Hour: $11.30

Refrigeration and Air Conditioner Service Person III

Filter changing and maintenance thereof, oil and greasing, tower and coil cleaning, scraping and painting, general housekeeping, taking of water samples.

Effective Period: 7/1/2015 - 6/30/2016
Wage Rate per Hour: $22.93
Supplemental Benefit Rate per Hour: $10.45

Refrigeration and Air Conditioner Service Person II

Filter changing and maintenance thereof, oil and greasing, tower and coil cleaning, scraping and painting, general housekeeping, taking of water samples.

Effective Period: 7/1/2015 - 6/30/2016
Wage Rate per Hour: $19.02
Supplemental Benefit Rate per Hour: $9.67

Refrigeration and Air Conditioner Service Person I

Filter changing and maintenance thereof, oil and greasing, tower and coil cleaning, scraping and painting, general housekeeping, taking of water samples.

Effective Period: 7/1/2015 - 6/30/2016
Wage Rate per Hour: $13.91
Supplemental Benefit Rate per Hour: $8.78

Overtime

Time and one half the regular rate after an 8 hour day.
Time and one half the regular rate for Saturday.
Double time the regular rate for Sunday.

Overtime Holidays

Double time the regular rate for work on the following holiday(s).
New Year's Day
Independence Day
Labor Day
Veteran's Day
Thanksgiving Day
Christmas Day

Double time and one half the regular rate for work on the following holiday(s).
Martin Luther King Jr. Day
President's Day
Memorial Day
Columbus Day

Paid Holidays

New Year's Day
Martin Luther King Jr. Day
President's Day
Memorial Day
Independence Day
Labor Day
Columbus Day
Veteran's Day
Thanksgiving Day
Christmas Day

(Local #638B)

STONE MASON - SETTER

Stone Mason - Setters

Effective Period: 7/1/2015 - 6/30/2016
Wage Rate per Hour: $47.20
Supplemental Benefit Rate per Hour: $37.15

Overtime

Time and one half the regular rate after a 7 hour day.
Time and one half the regular rate for Saturday.
Double time the regular rate for Sunday.

Overtime Holidays

Double time the regular rate for work on the following holiday(s).
New Year's Day
Washington's Birthday
Good Friday
Memorial Day
Independence Day

Labor Day
Thanksgiving Day
Christmas Day

Paid Holidays
1/2 day on Christmas Eve if work is performed in the A.M.

Shift Rates
For all work outside the regular workday (8:00 A.M. to 3:30 P.M. Monday through Friday), the pay shall be straight time plus a ten percent (10%) differential.

(Bricklayers District Council)

TAPER

Drywall Taper

Effective Period: 7/1/2015 - 12/29/2015
Wage Rate per Hour: $46.32
Supplemental Benefit Rate per Hour: $22.66

Effective Period: 12/30/2015 - 6/30/2016
Wage Rate per Hour: $46.82
Supplemental Benefit Rate per Hour: $22.66

Overtime
Time and one half the regular rate after a 7 hour day.
Time and one half the regular rate for Saturday.
Time and one half the regular rate for Sunday.

Overtime Holidays
Time and one half the regular rate for work on the following holiday(s).
New Year's Day
Martin Luther King Jr. Day
President's Day
Good Friday
Memorial Day
Independence Day
Labor Day
Columbus Day
Thanksgiving Day
Christmas Day

Paid Holidays
Any worker who reports to work on Christmas Eve or New Year's Eve pursuant to his employer's instruction shall be entitled to three (3) hours afternoon pay without working.

Shift Rates
Time and one half the regular rate outside the regular work hours (8:00 A.M. through 3:30 P.M.)

(Local #1974)

TELECOMMUNICATION WORKER
(Voice Installation Only)

Telecommunication Worker

Effective Period: 7/1/2015 - 6/30/2016
Wage Rate per Hour: $40.35
Supplemental Benefit Rate per Hour: $13.19
Supplemental Note: The above rate applies for Manhattan, Bronx, Brooklyn, Queens. $12.64 for Staten Island only.

Overtime
Time and one half the regular rate after a 7 hour day.
Time and one half the regular rate for Saturday.
Time and one half the regular rate for Sunday.

Overtime Holidays
Time and one half the regular rate for work on the following holiday(s).
New Year's Day
Lincoln's Birthday
Washington's Birthday
Memorial Day
Independence Day
Labor Day
Columbus Day
Election Day
Veteran's Day
Thanksgiving Day
Christmas Day

Paid Holidays
New Year's Day
Lincoln's Birthday
Washington's Birthday
Memorial Day
Independence Day
Labor Day
Columbus Day
Election Day
Veteran's Day

Thanksgiving Day
Christmas Day
Employees have the option of observing either Martin Luther King's Birthday or the day after Thanksgiving instead of Lincoln's Birthday

Shift Rates
For any workday that starts before 8A.M. or ends after 6P.M. there is a 10% differential for the applicable worker's hourly rate.

Vacation
After 6 months.....one week.
After 12 months but less than 7 years.....two weeks.
After 7 or more but less than 15 years.....three weeks.
After 15 years or more but less than 25 years.....four weeks.

(C.W.A.)

TILE FINISHER

Tile Finisher

Effective Period: 7/1/2015 - 6/30/2016
Wage Rate per Hour: $40.03
Supplemental Benefit Rate per Hour: $29.71

Overtime
Time and one half the regular rate after a 7 hour day.
Time and one half the regular rate for Saturday.
Double time the regular rate for Sunday.

Overtime Holidays
Double time the regular rate for work on the following holiday(s).
New Year's Day
President's Day
Good Friday
Memorial Day
Independence Day
Labor Day
Columbus Day
Veteran's Day
Thanksgiving Day
Day after Thanksgiving
Christmas Day

Paid Holidays
None

Shift Rates
Off shift work day (work performed outside the regular 8:00 A.M. to 3:30 P.M. workday): shift differential of one and one quarter (1¼) times the regular straight time rate of pay for the seven hours of actual off-shift work.

(Local #7)

TILE LAYER - SETTER

Tile Layer - Setter

Effective Period: 7/1/2015 - 6/30/2016
Wage Rate per Hour: $51.61
Supplemental Benefit Rate per Hour: $33.46

Overtime
Time and one half the regular rate after a 7 hour day.
Time and one half the regular rate for Saturday.
Double time the regular rate for Sunday.

Overtime Holidays
Double time the regular rate for work on the following holiday(s).
New Year's Day
President's Day
Good Friday
Memorial Day
Independence Day
Labor Day
Columbus Day
Veteran's Day
Thanksgiving Day
Day after Thanksgiving
Christmas Day

Shift Rates
Off shift work day (work performed outside the regular 8:00 A.M. to 3:30 P.M. workday): shift differential of one and one quarter (1¼) times the regular straight time rate of pay for the seven hours of actual off-shift work.

(Local #7)

TIMBERPERSON

Timberperson

Effective Period: 7/1/2015 - 6/30/2016
Wage Rate per Hour: $45.60
Supplemental Benefit Rate per Hour: $46.67

Overtime
Time and one half the regular rate after an 8 hour day.
Time and one half the regular rate for Saturday.
Double time the regular rate for Sunday.
Saturday may be used as a make-up day at straight time when a day is lost during that week to inclement weather.
Time and one half the regular hourly rate after 40 hours in any work week.

Overtime Holidays
Double time the regular rate for work on the following holiday(s).
New Year's Day
President's Day
Memorial Day
Independence Day
Labor Day
Columbus Day
Presidential Election Day
Thanksgiving Day
Christmas Day

Paid Holidays
None

Shift Rates
Off shift work commencing between 5:00 P.M. and 11:00 P.M. shall work eight and one half hours allowing for one half hour for lunch. The wage rate shall be 113% of the straight time hourly wage rate.

(Local #1536)

TUNNEL WORKER

Blasters, Mucking Machine Operators (Compressed Air Rates)

Effective Period: 7/1/2015 - 6/30/2016
Wage Rate per Hour: $59.17
Supplemental Benefit Rate per Hour: $49.45

Tunnel Workers (Compressed Air Rates)

Effective Period: 7/1/2015 - 6/30/2016

Wage Rate per Hour: $57.12
Supplemental Benefit Rate per Hour: $47.80

Top Nipper (Compressed Air Rates)

Effective Period: 7/1/2015 - 6/30/2016
Wage Rate per Hour: $56.07
Supplemental Benefit Rate per Hour: $46.96

Outside Lock Tender, Outside Gauge Tender,Muck Lock Tender (Compressed Air Rates)

Effective Period: 7/1/2015 - 6/30/2016
Wage Rate per Hour: $55.06
Supplemental Benefit Rate per Hour: $46.07

Bottom Bell & Top Bell Signal Person: Shaft Person (Compressed Air Rates)

Effective Period: 7/1/2015 - 6/30/2016
Wage Rate per Hour: $55.06
Supplemental Benefit Rate per Hour: $46.07

Changehouse Attendant: Powder Watchperson (Compressed Air Rates)

Effective Period: 7/1/2015 - 6/30/2016
Wage Rate per Hour: $48.16
Supplemental Benefit Rate per Hour: $43.62

Blasters (Free Air Rates)

Effective Period: 7/1/2015 - 6/30/2016
Wage Rate per Hour: $56.47
Supplemental Benefit Rate per Hour: $47.47

Tunnel Workers (Free Air Rates)

Effective Period: 7/1/2015 - 6/30/2016
Wage Rate per Hour: $54.04
Supplemental Benefit Rate per Hour: $45.45

All Others (Free Air Rates)

Effective Period: 7/1/2015 - 6/30/2016
Wage Rate per Hour: $49.93
Supplemental Benefit Rate per Hour: $42.06

Microtunneling (Free Air Rates)

Effective Period: 7/1/2015 - 6/30/2016
Wage Rate per Hour: $43.23
Supplemental Benefit Rate per Hour: $36.36

Overtime Description

For Repair-Maintenance Work on Existing Equipment and Facilities - Time and one half the regular rate after a 7 hour day, or for Saturday, or for Sunday. Double time the regular rate for work on a holiday.
For Small-Bore Micro Tunneling Machines - Time and one-half the regular rate shall be paid for all overtime.

Overtime

Double time the regular rate after an 8 hour day.
Double time the regular time rate for Saturday.
Double time the regular rate for Sunday.
Double time the regular rate for work on the following holiday(s).

Paid Holidays

New Year's Day
Lincoln's Birthday
President's Day
Memorial Day
Independence Day
Labor Day
Columbus Day
Election Day
Veteran's Day
Thanksgiving Day
Christmas Day

(Local #147)

WELDER
TO BE PAID AT THE RATE OF THE JOURNEYPERSON IN THE TRADE PERFORMING THE WORK.

OFFICE OF THE COMPTROLLER

CITY OF NEW YORK

220 APPRENTICESHIP PREVAILING WAGE SCHEDULE

APPENDIX

Pursuant to Labor Law §220 (3-e), only apprentices who are individually registered in a bona fide program to which the employer contractor is a participant and registered with the New York State Department of Labor, may be employed on a public work project.

Any employee listed on a payroll at an apprentice wage rate, who is not registered as above, shall be paid the journey person wage rate for the classification of work he actually performed.

Apprentice ratios are established to ensure the proper safety, training and supervision of apprentices. A ratio establishes the number of journey workers required for each apprentice in a program and on a job site. Ratios are interpreted as follows: in the case of a 1:1, 1:4 ratio, there must be one journey worker for the first apprentice, and four additional journey workers for each subsequent apprentice.

TABLE OF CONTENTS

CLASSIFICATION	PAGE
ASBESTOS HANDLER	3
BOILERMAKER	3
BRICKLAYER	4
CARPENTER	5
CEMENT MASON	6
CEMENT AND CONCRETE WORKER	6
DERRICKPERSON & RIGGER (STONE)	7
DOCKBUILDER/PILE DRIVER	8
ELECTRICIAN	8
ELEVATOR CONSTRUCTOR	10
ELEVATOR REPAIR & MAINTENANCE	11
ENGINEER	12
ENGINEER - OPERATING	13
FLOOR COVERER	14
GLAZIER	14
HEAT & FROST INSULATOR	15
HOUSE WRECKER	16
IRON WORKER - ORNAMENTAL	16
IRON WORKER - STRUCTURAL	17
LABORER (FOUNDATION, CONCRETE, EXCAVATING, STREET PIPE LAYER & COMMON)	18
MARBLE MECHANICS	19
MASON TENDER	20
METALLIC LATHER	21
MILLWRIGHT	22
PAVER AND ROADBUILDER	22
PAINTER	23
PAINTER - STRUCTURAL STEEL	24
PLASTERER	24
PLUMBER	25
POINTER - WATERPROOFER, CAULKER MECHANIC (EXTERIOR BUILDING RENOVATION)	26
ROOFER	27
SHEET METAL WORKER	28
SIGN ERECTOR	29
STEAMFITTER	30
STONE MASON - SETTER	31
TAPER	32
TILE LAYER - SETTER	32
TIMBERPERSON	33

ASBESTOS HANDLER
(Ratio of Apprentice Journeyperson: 1 to 1, 1 to 3)

Asbestos Handler (First 1000 Hours)

Effective Period: 7/1/2015 - 6/30/2016
Wage Rate Per Hour: 78% of Journeyperson's rate
Supplemental Benefit Rate Per Hour: $15.95

Asbestos Handler (Second 1000 Hours)

Effective Period: 7/1/2015 - 6/30/2016
Wage Rate Per Hour: 80% of Journeyperson's rate
Supplemental Benefit Rate Per Hour: $15.95

Asbestos Handler (Third 1000 Hours)

Effective Period: 7/1/2015 - 6/30/2016
Wage Rate Per Hour: 83% of Journeyperson's rate
Supplemental Benefit Rate Per Hour: $15.95

Asbestos Handler (Fourth 1000 Hours)

Effective Period: 7/1/2015 - 6/30/2016
Wage Rate Per Hour: 89% of Journeyperson's rate
Supplemental Benefit Rate Per Hour: $15.95

(Local #78)

BOILERMAKER
(Ratio of Apprentice to Journeyperson: 1 to 1, 1 to 3)

Boilermaker (First Year)

Effective Period: 7/1/2015 - 6/30/2016
Wage Rate Per Hour: 65% of Journeyperson's rate
Supplemental Benefit Rate Per Hour: $30.00

Boilermaker (Second Year: 1st Six Months)

Effective Period: 7/1/2015 - 6/30/2016
Wage Rate Per Hour: 70% of Journeyperson's rate

Supplemental Benefit Rate Per Hour: $31.66

Boilermaker (Second Year: 2nd Six Months)

Effective Period: 7/1/2015 - 6/30/2016
Wage Rate Per Hour: 75% of Journeyperson's rate
Supplemental Benefit Rate Per Hour: $33.32

Boilermaker (Third Year: 1st Six Months)

Effective Period: 7/1/2015 - 6/30/2016
Wage Rate Per Hour: 80% of Journeyperson's rate
Supplemental Benefit Rate Per Hour: $35.00

Boilermaker (Third Year: 2nd Six Months)

Effective Period: 7/1/2015 - 6/30/2016
Wage Rate Per Hour: 85% of Journeyperson's rate
Supplemental Benefit Rate Per Hour: $36.67

Boilermaker (Fourth Year: 1st Six Months)

Effective Period: 7/1/2015 - 6/30/2016
Wage Rate Per Hour: 90% of Journeyperson's rate
Supplemental Benefit Rate Per Hour: $38.34

Boilermaker (Fourth Year: 2nd Six Months)

Effective Period: 7/1/2015 - 6/30/2016
Wage Rate Per Hour: 95% of Journeyperson's rate
Supplemental Benefit Rate Per Hour: $40.01

(Local #5)

BRICKLAYER
(Ratio of Apprentice to Journeyperson: 1 to 1, 1 to 4)

Bricklayer (First 750 Hours)

Effective Period: 7/1/2015 - 6/30/2016
Wage Rate Per Hour: 50% of Journeyperson's rate
Supplemental Benefit Rate Per Hour: $17.10

Bricklayer (Second 750 Hours)

Effective Period: 7/1/2015 - 6/30/2016
Wage Rate Per Hour: 60% of Journeyperson's rate
Supplemental Benefit Rate Per Hour: $17.10

Bricklayer (Third 750 Hours)

Effective Period: 7/1/2015 - 6/30/2016
Wage Rate Per Hour: 70% of Journeyperson's rate
Supplemental Benefit Rate Per Hour: $17.10

Bricklayer (Fourth 750 Hours)

Effective Period: 7/1/2015 - 6/30/2016
Wage Rate Per Hour: 80% of Journeyperson's rate
Supplemental Benefit Rate Per Hour: $17.10

Bricklayer (Fifth 750 Hours)

Effective Period: 7/1/2015 - 6/30/2016
Wage Rate Per Hour: 90% of Journeyperson's rate
Supplemental Benefit Rate Per Hour: $17.10

Bricklayer (Sixth 750 Hours)

Effective Period: 7/1/2015 - 6/30/2016
Wage Rate Per Hour: 95% of Journeyperson's rate
Supplemental Benefit Rate Per Hour: $17.10

(Bricklayer District Council)

CARPENTER
(Ratio of Apprentice to Journeyperson: 1 to 1, 1 to 4)

Carpenter (First Year)

Effective Period: 7/1/2015 - 6/30/2016
Wage Rate Per Hour: 40% of Journeyperson's rate
Supplemental Benefit Rate Per Hour: $31.14

Carpenter (Second Year)

Effective Period: 7/1/2015 - 6/30/2016
Wage Rate Per Hour: 50% of Journeyperson's rate
Supplemental Benefit Rate Per Hour: $31.14

Carpenter (Third Year)

Effective Period: 7/1/2015 - 6/30/2016
Wage Rate Per Hour: 65% of Journeyperson's rate
Supplemental Benefit Rate Per Hour: $31.14

Carpenter (Fourth Year)

Effective Period: 7/1/2015 - 6/30/2016
Wage Rate Per Hour: 80% of Journeyperson's rate
Supplemental Benefit Rate Per Hour: $31.14

(Carpenters District Council)

CEMENT MASON
(Ratio of Apprentice to Journeyperson: 1 to 1, 1 to 4)

Cement Mason (First Year)

Effective Period: 7/1/2015 - 6/30/2016
Wage and Supplemental Rate Per Hour: 50% of Journeyperson's Rate

Cement Mason (Second Year)

Effective Period: 7/1/2015 - 6/30/2016
Wage and Supplemental Rate Per Hour: 60% of Journeyperson's Rate

Cement Mason (Third Year)

Effective Period: 7/1/2015 - 6/30/2016
Wage and Supplemental Rate Per Hour: 70% of Journeyperson's Rate

(Local #780)

CEMENT AND CONCRETE WORKER
(Ratio of Apprentice to Journeyperson: 1 to 1, 1 to 3)

Cement & Concrete Worker (First 1333 hours)

Effective Period: 7/1/2015 - 6/30/2016
Wage Rate Per Hour: 50% of Journeyperson's rate
Supplemental Benefit Rate Per Hour: $18.84

Cement & Concrete Worker (Second 1333 hours)

Effective Period: 7/1/2015 - 6/30/2016
Wage Rate Per Hour: 65% of Journeyperson's rate
Supplemental Benefit Rate Per Hour: $24.65

Cement & Concrete Worker (Last 1334 hours)

Effective Period: 7/1/2015 - 6/30/2016
Wage Rate Per Hour: 80% of Journeyperson's rate
Supplemental Benefit Rate Per Hour: $25.47

(Cement Concrete Workers District Council)

DERRICKPERSON & RIGGER (STONE)
(Ratio of Apprentice to Journeyperson: 1 to 1, 1 to 4)

Derrickperson & Rigger (stone) - First Year

Effective Period: 7/1/2015 - 6/30/2016
Wage Rate Per Hour: 50% of Journeyperson's rate
Supplemental Benefit Rate Per Hour: 50% of Journeyperson's rate

Derrickperson & Rigger (stone) - Second Year: 1st Six Months

Effective Period: 7/1/2015 - 6/30/2016
Wage Rate Per Hour: 70% of Journeyperson's rate
Supplemental Benefit Rate Per Hour: 75% of Journeyperson's rate

Derrickperson & Rigger (stone) - Second Year: 2nd Six Months

Effective Period: 7/1/2015 - 6/30/2016
Wage Rate Per Hour: 80% of Journeyperson's rate
Supplemental Benefit Rate Per Hour: 75% of Journeyperson's rate

Derrickperson & Rigger (stone) - Third Year

Effective Period: 7/1/2015 - 6/30/2016
Wage Rate Per Hour: 90% of Journeyperson's rate
Supplemental Benefit Rate Per Hour: 75% of Journeyperson's rate

(Local #197)

DOCKBUILDER/PILE DRIVER
(Ratio of Apprentice to Journeyperson: 1 to 1, 1 to 6)

Dockbuilder/Pile Driver (First Year)

Effective Period: 7/1/2015 - 6/30/2016
Wage Rate Per Hour: 40% of Journeyperson's rate
Supplemental Benefit Rate Per Hour: $31.52

Dockbuilder/Pile Driver (Second Year)

Effective Period: 7/1/2015 - 6/30/2016
Wage Rate Per Hour: 50% of Journeyperson's rate
Supplemental Benefit Rate Per Hour: $31.52

Dockbuilder/Pile Driver (Third Year)

Effective Period: 7/1/2015 - 6/30/2016
Wage Rate Per Hour: 65% of Journeyperson's rate
Supplemental Benefit Rate Per Hour: $31.52

Dockbuilder/Pile Driver (Fourth Year)

Effective Period: 7/1/2015 - 6/30/2016
Wage Rate Per Hour: 80% of Journeyperson's rate
Supplemental Benefit Rate Per Hour: $31.52

(Carpenters District Council)

ELECTRICIAN
(Ratio of Apprentice to Journeyperson: 1 to 1, 1 to 3)

Electrician (First Term: 0-6 Months)

Effective Period: 7/1/2015 - 6/30/2016
Wage Rate per Hour: $13.00

Supplemental Benefit Rate per Hour: $11.61
Overtime Supplemental Rate Per Hour: $12.47

Electrician (First Term: 7-12 Months)

Effective Period: 7/1/2015 - 6/30/2016
Wage Rate per Hour: $14.00
Supplemental Benefit Rate per Hour: $12.12
Overtime Supplemental Rate Per Hour: $13.04

Electrician (Second Term: 0-6 Months)

Effective Period: 7/1/2015 - 6/30/2016
Wage Rate per Hour: $15.00
Supplemental Benefit Rate per Hour: $12.63
Overtime Supplemental Rate Per Hour: $13.62

Electrician (Second Term: 7-12 Months)

Effective Period: 7/1/2015 - 6/30/2016
Wage Rate per Hour: $16.00
Supplemental Benefit Rate per Hour: $13.14
Overtime Supplemental Rate Per Hour: $14.19

Electrician (Third Term: 0-6 Months)

Effective Period: 7/1/2015 - 6/30/2016
Wage Rate per Hour: $17.00
Supplemental Benefit Rate per Hour: $13.65
Overtime Supplemental Rate Per Hour: $14.77

Electrician (Third Term: 7-12 Months)

Effective Period: 7/1/2015 - 6/30/2016
Wage Rate per Hour: $18.00
Supplemental Benefit Rate per Hour: $14.16
Overtime Supplemental Rate Per Hour: $15.34

Electrician (Fourth Term: 0-6 Months)

Effective Period: 7/1/2015 - 6/30/2016
Wage Rate per Hour: $19.00
Supplemental Benefit Rate per Hour: $14.67
Overtime Supplemental Rate Per Hour: $15.92

Electrician (Fourth Term: 7-12 Months)

Effective Period: 7/1/2015 - 6/30/2016
Wage Rate per Hour: $21.00

Supplemental Benefit Rate per Hour: $15.68
Overtime Supplemental Rate Per Hour: $17.07

Electrician (Fifth Term: 0-12 Months - Hired on or after 5/10/07)

Effective Period: 7/1/2015 - 6/30/2016
Wage Rate per Hour: $23.00
Supplemental Benefit Rate per Hour: $18.56
Overtime Supplemental Rate Per Hour: $20.00

Electrician (Fifth Term: 13-18 Months - Hired on or after 5/10/07)

Effective Period: 7/1/2015 - 6/30/2016
Wage Rate per Hour: $27.50
Supplemental Benefit Rate per Hour: $20.82
Overtime Supplemental Rate Per Hour: $22.54

Electrician (Fifth Term: 0-18 Months - Hired before 5/10/07)

Effective Period: 7/1/2015 - 6/30/2016
Wage Rate per Hour: $26.80
Supplemental Benefit Rate per Hour: $20.46
Overtime Supplemental Rate Per Hour: $22.14

Overtime Description
Overtime Wage paid at time and one half the regular rate
For "A" rated Apprentices (work in excess of 7 hours per day)
For "M" rated Apprentices (work in excess of 8 hours per day)

(Local #3)

ELEVATOR CONSTRUCTOR
(Ratio of Apprentice to Journeyperson: 1 to 1, 1 to 2)

Elevator (Constructor) - First Year

Effective Period: 7/1/2015 - 3/16/2016
Wage Rate Per Hour: 50% of Journeyperson's rate
Supplemental Rate Per Hour: $26.94

Effective Period: 3/17/2016 - 6/30/2016
Wage Rate Per Hour: 50% of Journeyperson's rate
Supplemental Rate Per Hour: $28.41

Elevator (Constructor) - Second Year

Effective Period: 7/1/2015 - 3/16/2016
Wage Rate Per Hour: 55% of Journeyperson's rate
Supplemental Rate Per Hour: $27.35

Effective Period: 3/17/2016 - 6/30/2016
Wage Rate Per Hour: 55% of Journeyperson's rate
Supplemental Rate Per Hour: $28.84

Elevator (Constructor) - Third Year

Effective Period: 7/1/2015 - 3/16/2016
Wage Rate Per Hour: 65% of Journeyperson's rate
Supplemental Rate Per Hour: $28.17

Effective Period: 3/17/2016 - 6/30/2016
Wage Rate Per Hour: 65% of Journeyperson's rate
Supplemental Rate Per Hour: $29.69

Elevator (Constructor) - Fourth Year

Effective Period: 7/1/2015 - 3/16/2016
Wage Rate Per Hour: 75% of Journeyperson's rate
Supplemental Rate Per Hour: $29.00

Effective Period: 3/17/2016 - 6/30/2016
Wage Rate Per Hour: 75% of Journeyperson's rate
Supplemental Rate Per Hour: $30.54

(Local #1)

ELEVATOR REPAIR & MAINTENANCE
(Ratio of Apprentice to Journeyperson: 1 to 1, 1 to 2)

Elevator Service/Modernization Mechanic (First Year)

Effective Period: 7/1/2015 - 3/16/2016
Wage Rate Per Hour: 50% of Journeyperson's rate
Supplemental Benefit Per Hour: $26.87

Effective Period: 3/17/2016 - 6/30/2016
Wage Rate Per Hour: 50% of Journeyperson's rate
Supplemental Benefit Per Hour: $28.34

Elevator Service/Modernization Mechanic (Second Year)

Effective Period: 7/1/2015 - 3/16/2016
Wage Rate Per Hour: 55% of Journeyperson's rate
Supplemental Benefit Per Hour: $27.27

Effective Period: 3/17/2016 - 6/30/2016
Wage Rate Per Hour: 55% of Journeyperson's rate
Supplemental Benefit Per Hour: $28.76

Elevator Service/Modernization Mechanic (Third Year)

Effective Period: 7/1/2015 - 3/16/2016
Wage Rate Per Hour: 65% of Journeyperson's rate
Supplemental Benefit Per Hour: $28.08

Effective Period: 3/17/2016 - 6/30/2016
Wage Rate Per Hour: 65% of Journeyperson's rate
Supplemental Benefit Per Hour: $29.60

Elevator Service/Modernization Mechanic (Fourth Year)

Effective Period: 7/1/2015 - 3/16/2016
Wage Rate Per Hour: 75% of Journeyperson's rate
Supplemental Benefit Per Hour: $28.89

Effective Period: 3/17/2016 - 6/30/2016
Wage Rate Per Hour: 75% of Journeyperson's rate
Supplemental Benefit Per Hour: $30.43

(Local #1)

ENGINEER
(Ratio of Apprentice to Journeyperson: 1 to 1, 1 to 5)

Engineer - First Year

Effective Period: 7/1/2015 - 6/30/2016
Wage Rate per Hour: $23.68
Supplemental Benefit Rate per Hour: $22.55

Engineer - Second Year

Effective Period: 7/1/2015 - 6/30/2016
Wage Rate per Hour: $29.60
Supplemental Benefit Rate per Hour: $22.55

Engineer - Third Year

Effective Period: 7/1/2015 - 6/30/2016
Wage Rate per Hour: $32.56
Supplemental Benefit Rate per Hour: $22.55

Engineer - Fourth Year

Effective Period: 7/1/2015 - 6/30/2016
Wage Rate per Hour: $35.52
Supplemental Benefit Rate per Hour: $22.55

(Local #15)

ENGINEER - OPERATING
(Ratio of Apprentice to Journeyperson: 1 to 1, 1 to 5)

Operating Engineer - First Year

Effective Period: 7/1/2015 - 6/30/2016
Wage Rate Per Hour 40% of Journeyperson's Rate
Supplemental Benefit Per Hour: $20.15

Operating Engineer - Second Year

Effective Period: 7/1/2015 - 6/30/2016
Wage Rate Per Hour: 50% of Journeyperson's Rate
Supplemental Benefit Per Hour: $20.15

Operating Engineer - Third Year

Effective Period: 7/1/2015 - 6/30/2016
Wage Rate Per Hour: 60% of Journeyperson's Rate
Supplemental Benefit Per Hour: $20.15

(Local #14)

FLOOR COVERER
(Ratio of Apprentice to Journeyperson: 1 to 1, 1 to 4)

Floor Coverer (First Year)

Effective Period: 7/1/2015 - 6/30/2016
Wage Rate Per Hour: 40% of Journeyperson's rate
Supplemental Rate Per Hour: $31.14

Floor Coverer (Second Year)

Effective Period: 7/1/2015 - 6/30/2016
Wage Rate Per Hour: 50% of Journeyperson's rate
Supplemental Rate Per Hour: $31.14

Floor Coverer (Third Year)

Effective Period: 7/1/2015 - 6/30/2016
Wage Rate Per Hour: 65% of Journeyperson's rate
Supplemental Rate Per Hour: $31.14

Floor Coverer (Fourth Year)

Effective Period: 7/1/2015 - 6/30/2016
Wage Rate Per Hour: 80% of Journeyperson's rate
Supplemental Rate Per Hour: $31.14

(Carpenters District Council)

GLAZIER
(Ratio of Apprentice to Journeyperson: 1 to 1, 1 to 3)

Glazier (First Year)

Effective Period: 7/1/2015 - 6/30/2016
Wage Rate Per Hour: 40% of Journeyperson's rate
Supplemental Rate Per Hour: $13.64
Effective 11/1/2015 - Supplemental Rate Per Hour: $13.79

Glazier (Second Year)

Effective Period: 7/1/2015 - 6/30/2016
Wage Rate Per Hour: 50% of Journeyperson's rate

Supplemental Rate Per Hour: $22.97
Effective 11/1/2015 - Supplemental Rate Per Hour: $23.13

Glazier (Third Year)

Effective Period: 7/1/2015 - 6/30/2016
Wage Rate Per Hour: 60% of Journeyperson's rate
Supplemental Rate Per Hour: $25.87
Effective 11/1/2015 - Supplemental Rate Per Hour: $26.03

Glazier (Fourth Year)

Effective Period: 7/1/2015 - 6/30/2016
Wage Rate Per Hour: 80% of Journeyperson's rate
Supplemental Rate Per Hour: $31.04
Effective 11/1/2015 - Supplemental Rate Per Hour: $31.29

(Local #1281)

HEAT & FROST INSULATOR
(Ratio of Apprentice to Journeyperson: 1 to 1, 1 to 4)

Heat & Frost Insulator (First Year)

Effective Period: 7/1/2015 - 6/30/2016
Wage and Supplemental Rate Per Hour: 40% of Journeyperson's rate

Heat & Frost Insulator (Second Year)

Effective Period: 7/1/2015 - 6/30/2016
Wage and Supplemental Rate Per Hour: 60% of Journeyperson's rate

Heat & Frost Insulator (Third Year)

Effective Period: 7/1/2015 - 6/30/2016
Wage and Supplemental Rate Per Hour: 70% of Journeyperson's rate

Heat & Frost Insulator (Fourth Year)

Effective Period: 7/1/2015 - 6/30/2016
Wage and Supplemental Rate Per Hour: 80% of Journeyperson's rate

(Local #12)

HOUSE WRECKER
(TOTAL DEMOLITION)
(Ratio of Apprentice to Journeyperson: 1 to 1, 1 to 3)

House Wrecker - First Year

Effective Period: 7/1/2015 - 6/30/2016
Wage Rate per Hour: $21.17
Supplemental Benefit Rate per Hour: $17.33

House Wrecker - Second Year

Effective Period: 7/1/2015 - 6/30/2016
Wage Rate per Hour: $22.32
Supplemental Benefit Rate per Hour: $17.33

House Wrecker - Third Year

Effective Period: 7/1/2015 - 6/30/2016
Wage Rate per Hour: $23.97
Supplemental Benefit Rate per Hour: $17.33

House Wrecker - Fourth Year

Effective Period: 7/1/2015 - 6/30/2016
Wage Rate per Hour: $26.53
Supplemental Benefit Rate per Hour: $17.33

(Mason Tenders District Council)

IRON WORKER - ORNAMENTAL
(Ratio of Apprentice to Journeyperson: 1 to 1, 1 to 4)

Iron Worker (Ornamental) - 1st Ten Months

Effective Period: 7/1/2015 - 6/30/2016
Wage Rate Per Hour: 50% of Journeyperson's rate
Supplemental Rate Per Hour: $36.50

Iron Worker (Ornamental) - 11 -16 Months

Effective Period: 7/1/2015 - 6/30/2016
Wage Rate Per Hour: 55% of Journeyperson's rate
Supplemental Rate Per Hour: $37.62

Iron Worker (Ornamental) - 17 - 22 Months

Effective Period: 7/1/2015 - 6/30/2016
Wage Rate Per Hour: 60% of Journeyperson's rate
Supplemental Rate Per Hour: $38.73

Iron Worker (Ornamental) - 23 - 28 Months

Effective Period: 7/1/2015 - 6/30/2016
Wage Rate Per Hour: 70% of Journeyperson's rate
Supplemental Rate Per Hour: $40.97

Iron Worker (Ornamental) - 29 - 36 Months

Effective Period: 7/1/2015 - 6/30/2016
Wage Rate Per Hour: 80% of Journeyperson's rate
Supplemental Rate Per Hour: $43.20

(Local #580)

IRON WORKER - STRUCTURAL
(Ratio of Apprentice to Journeyperson: 1 to 1, 1 to 6)

Iron Worker (Structural) - 1st Six Months

Effective Period: 7/1/2015 - 6/30/2016
Wage Rate per Hour: $25.48
Supplemental Benefit Rate per Hour: $46.83

Iron Worker (Structural) - 7- 18 Months

Effective Period: 7/1/2015 - 6/30/2016
Wage Rate per Hour: $26.08
Supplemental Benefit Rate per Hour: $46.83

Iron Worker (Structural) - 19 - 36 months

Effective Period: 7/1/2015 - 6/30/2016
Wage Rate per Hour: $26.68
Supplemental Benefit Rate per Hour: $46.83

(Local #40 and #361)

LABORER (FOUNDATION, CONCRETE, EXCAVATING, STREET PIPE LAYER & COMMON)
(Ratio Apprentice to Journeyperson: 1 to 1, 1 to 3)

Laborer (Foundation, Concrete, Excavating, Street Pipe Layer & Common) - First 1000 hours

Effective Period: 7/1/2015 - 6/30/2016
Wage Rate Per Hour: 50% of Journeyperson's rate
Supplemental Rate Per Hour: $36.53

Laborer (Foundation, Concrete, Excavating, Street Pipe Layer & Common) - Second 1000 hours

Effective Period: 7/1/2015 - 6/30/2016
Wage Rate Per Hour: 60% of Journeyperson's rate
Supplemental Rate Per Hour: $36.53

Laborer (Foundation, Concrete, Excavating, Street Pipe Layer & Common) - Third 1000 hours

Effective Period: 7/1/2015 - 6/30/2016
Wage Rate Per Hour: 75% of Journeyperson's rate
Supplemental Rate Per Hour: $36.53

Laborer (Foundation, Concrete, Excavating, Street Pipe Layer & Common) - Fourth 1000 hours

Effective Period: 7/1/2015 - 6/30/2016
Wage Rate Per Hour: 90% of Journeyperson's rate
Supplemental Rate Per Hour: $36.53

(Local #731)

MARBLE MECHANICS
(Ratio of Apprentice to Journeyperson: 1 to 1, 1 to 4)

Cutters & Setters - First 750 Hours

Effective Period: 7/1/2015 - 6/30/2016
Wage and Supplemental Rate Per Hour: 50% of Journeyperson's rate

NO BENEFITS PAID DURING THE FIRST TWO MONTHS (PROBATIONARY PERIOD)

Cutters & Setters - Second 750 Hours

Effective Period: 7/1/2015 - 6/30/2016
Wage and Supplemental Rate Per Hour: 55% of Journeyperson's rate

Cutters & Setters - Third 750 Hours

Effective Period: 7/1/2015 - 6/30/2016
Wage and Supplemental Rate Per Hour: 65% of Journeyperson's rate

Cutters & Setters - Fourth 750 Hours

Effective Period: 7/1/2015 - 6/30/2016
Wage and Supplemental Rate Per Hour: 75% of Journeyperson's rate

Cutters & Setters - Fifth 750 Hours

Effective Period: 7/1/2015 - 6/30/2016
Wage and Supplemental Rate Per Hour: 85% of Journeyperson's rate

Cutters & Setters - Sixth 750 Hours

Effective Period: 7/1/2015 - 6/30/2016
Wage and Supplemental Rate Per Hour: 95% of Journeyperson's rate

Polishers & Finishers - First 750 Hours

Effective Period: 7/1/2015 - 6/30/2016
Wage and Supplemental Rate Per Hour: 50% of Journeyperson's rate

NO BENEFITS PAID DURING THE FIRST TWO MONTHS (PROBATIONARY PERIOD)

Polishers & Finishers - Second 750 Hours

Effective Period: 7/1/2015 - 6/30/2016
Wage and Supplemental Rate Per Hour: 60% of Journeyperson's rate

Polishers & Finishers - Third 750 Hours

Effective Period: 7/1/2015 - 6/30/2016
Wage and Supplemental Rate Per Hour: 75% of Journeyperson's rate

Polishers & Finishers - Fourth 750 Hours

Effective Period: 7/1/2015 - 6/30/2016
Wage and Supplemental Rate Per Hour: 90% of Journeyperson's rate

(Local #7)

MASON TENDER
(Ratio of Apprentice to Journeyperson: 1 to 1, 1 to 3)

Mason Tender - First Year

Effective Period: 7/1/2015 - 6/30/2016
Wage Rate per Hour: $21.39
Supplemental Benefit Rate per Hour: $18.44

Mason Tender - Second Year

Effective Period: 7/1/2015 - 6/30/2016
Wage Rate per Hour: $22.54
Supplemental Benefit Rate per Hour: $18.44

Mason Tender - Third Year

Effective Period: 7/1/2015 - 6/30/2016
Wage Rate per Hour: $24.29
Supplemental Benefit Rate per Hour: $18.49

Mason Tender - Fourth Year

Effective Period: 7/1/2015 - 6/30/2016
Wage Rate per Hour: $26.95
Supplemental Benefit Rate per Hour: $18.49

(Local #79)

METALLIC LATHER
(Ratio of Apprentice to Journeyperson: 1 to 1, 1 to 3)

Metallic Lather (First Year -Called Prior to 6/29/11)

Effective Period: 7/1/2015 - 6/30/2016
Wage Rate per Hour: $29.41
Supplemental Benefit Rate per Hour: $22.89

Metallic Lather (Second Year - Called Prior to 6/29/11)

Effective Period: 7/1/2015 - 6/30/2016
Wage Rate per Hour: $34.01
Supplemental Benefit Rate per Hour: $24.54

Metallic Lather (Third Year - Called Prior to 6/29/11)

Effective Period: 7/1/2015 - 6/30/2016
Wage Rate per Hour: $39.07
Supplemental Benefit Rate per Hour: $25.69

Metallic Lather (First Year -Called On Or After 6/29/11)

Effective Period: 7/1/2015 - 6/30/2016
Wage Rate per Hour: $23.01
Supplemental Benefit Rate per Hour: $17.95

Metallic Lather (Second Year - Called On Or After 6/29/11)

Effective Period: 7/1/2015 - 6/30/2016
Wage Rate per Hour: $28.11
Supplemental Benefit Rate per Hour: $17.95

Metallic Lather (Third Year - Called On Or After 6/29/11)

Effective Period: 7/1/2015 - 6/30/2016
Wage Rate per Hour: $33.21
Supplemental Benefit Rate per Hour: $17.95

(Local #46)

MILLWRIGHT
(Ratio of Apprentice to Journeyperson: 1 to 1, 1 to 4)

Millwright (First Year)

Effective Period: 7/1/2015 - 6/30/2016
Wage Rate per Hour: $27.23
Supplemental Benefit Rate per Hour: $34.06

Millwright (Second Year)

Effective Period: 7/1/2015 - 6/30/2016
Wage Rate per Hour: $32.18
Supplemental Benefit Rate per Hour: $37.62

Millwright (Third Year)

Effective Period: 7/1/2015 - 6/30/2016
Wage Rate per Hour: $37.13
Supplemental Benefit Rate per Hour: $41.83

Millwright (Fourth Year)

Effective Period: 7/1/2015 - 6/30/2016
Wage Rate per Hour: $47.03
Supplemental Benefit Rate per Hour: $48.31

(Local #740)

PAVER AND ROADBUILDER
(Ratio of Apprentice to Journeyperson: 1 to 1, 1 to 3)

Paver and Roadbuilder - First Year (Minimum 1000 hours)

Effective Period: 7/1/2015 - 6/30/2016
Wage Rate per Hour: $27.05
Supplemental Benefit Rate per Hour: $17.12

Paver and Roadbuilder - Second Year (Minimum 1000 hours)

Effective Period: 7/1/2015 - 6/30/2016
Wage Rate per Hour: $28.69
Supplemental Benefit Rate per Hour: $17.12

(Local #1010)

PAINTER
(Ratio of Apprentice to Journeyperson: 1 to 1, 1 to 3)

Painter - Brush & Roller - First Year

Effective Period: 7/1/2015 - 10/31/2015
Wage Rate per Hour: $15.80
Supplemental Benefit Rate per Hour: $11.88

Effective Period: 11/1/2015 - 6/30/2016
Wage Rate per Hour: $16.40
Supplemental Benefit Rate per Hour: $12.13

Painter - Brush & Roller - Second Year

Effective Period: 7/1/2015 - 10/31/2015
Wage Rate per Hour: $19.75
Supplemental Benefit Rate per Hour: $15.73

Effective Period: 11/1/2015 - 6/30/2016
Wage Rate per Hour: $20.50
Supplemental Benefit Rate per Hour: $15.98

Painter - Brush & Roller - Third Year

Effective Period: 7/1/2015 - 10/31/2015
Wage Rate per Hour: $23.70
Supplemental Benefit Rate per Hour: $18.64

Effective Period: 11/1/2015 - 6/30/2016
Wage Rate per Hour: $24.60
Supplemental Benefit Rate per Hour: $18.89

Painter - Brush & Roller - Fourth Year

Effective Period: 7/1/2015 - 10/31/2015
Wage Rate per Hour: $31.60

Supplemental Benefit Rate per Hour: $24.02

Effective Period: 11/1/2015 - 6/30/2016
Wage Rate per Hour: $32.80
Supplemental Benefit Rate per Hour: $24.27

(District Council of Painters)

PAINTER - STRUCTURAL STEEL
(Ratio of Apprentice to Journeyperson: 1 to 1, 1 to 3)

Painters - Structural Steel (First Year)

Effective Period: 7/1/2015 - 6/30/2016
Wage and Supplemental Rate Per Hour: 40% of Journeyperson's rate

Painters - Structural Steel (Second Year)

Effective Period: 7/1/2015 - 6/30/2016
Wage and Supplemental Rate Per Hour: 60% of Journeyperson's rate

Painters - Structural Steel (Third Year)

Effective Period: 7/1/2015 - 6/30/2016
Wage and Supplemental Rate Per Hour: 80% of Journeyperson's rate

(Local #806)

PLASTERER
(Ratio of Apprentice to Journeyperson: 1 to 1, 1 to 3)

Plasterer - First Year: 1st Six Months

Effective Period: 7/1/2015 - 6/30/2016
Wage Rate Per Hour: 40% of Journeyperson's rate
Supplemental Rate Per Hour: $15.76

Plasterer - First Year: 2nd Six Months

Effective Period: 7/1/2015 - 6/30/2016
Wage Rate Per Hour: 45% of Journeyperson's rate
Supplemental Rate Per Hour: $16.24

Plasterer - Second Year: 1st Six Months

Effective Period: 7/1/2015 - 6/30/2016
Wage Rate Per Hour: 55% of Journeyperson's rate
Supplemental Rate Per Hour: $18.21

Plasterer - Second Year: 2nd Six Months

Effective Period: 7/1/2015 - 6/30/2016
Wage Rate Per Hour: 60% of Journeyperson's rate
Supplemental Rate Per Hour: $19.29

Plasterer - Third Year: 1st Six Months

Effective Period: 7/1/2015 - 6/30/2016
Wage Rate Per Hour: 70% of Journeyperson's rate
Supplemental Rate Per Hour: $21.46

Plasterer - Third Year: 2nd Six Months

Effective Period: 7/1/2015 - 6/30/2016
Wage Rate Per Hour: 75% of Journeyperson's rate
Supplemental Rate Per Hour: $22.54

(Local #530)

PLUMBER
(Ratio of Apprentice to Journeyperson: 1 to 1, 1 to 3)

Plumber - First Year: 1st Six Months

Effective Period: 7/1/2015 - 6/30/2016
Wage Rate per Hour: $14.00
Supplemental Benefit Rate per Hour: $0.71

Plumber - First Year: 2nd Six Months

Effective Period: 7/1/2015 - 6/30/2016
Wage Rate per Hour: $14.00

Supplemental Benefit Rate per Hour: $2.96

Plumber - Second Year

Effective Period: 7/1/2015 - 6/30/2016
Wage Rate per Hour: $23.87
Supplemental Benefit Rate per Hour: $12.76

Plumber - Third Year

Effective Period: 7/1/2015 - 6/30/2016
Wage Rate per Hour: $25.97
Supplemental Benefit Rate per Hour: $12.76

Plumber - Fourth Year

Effective Period: 7/1/2015 - 6/30/2016
Wage Rate per Hour: $28.82
Supplemental Benefit Rate per Hour: $12.76

Plumber - Fifth Year: 1st Six Months

Effective Period: 7/1/2015 - 6/30/2016
Wage Rate per Hour: $30.22
Supplemental Benefit Rate per Hour: $12.76

Plumber - Fifth Year: 2nd Six Months

Effective Period: 7/1/2015 - 6/30/2016
Wage Rate per Hour: $42.29
Supplemental Benefit Rate per Hour: $12.76

(Plumbers Local #1)

POINTER - WATERPROOFER, CAULKER MECHANIC (EXTERIOR BUILDING RENOVATION)

(Ratio of Apprentice to Journeyperson: 1 to 1, 1 to 4)

Pointer - Waterproofer, Caulker Mechanic - First Year

Effective Period: 7/1/2015 - 6/30/2016
Wage Rate per Hour: $25.01

Supplemental Benefit Rate per Hour: $4.75

Pointer - Waterproofer, Caulker Mechanic - Second Year

Effective Period: 7/1/2015 - 6/30/2016
Wage Rate per Hour: $27.25
Supplemental Benefit Rate per Hour: $9.70

Pointer - Waterproofer, Caulker Mechanic - Third Year

Effective Period: 7/1/2015 - 6/30/2016
Wage Rate per Hour: $32.24
Supplemental Benefit Rate per Hour: $12.45

Pointer - Waterproofer, Caulker Mechanic - Fourth Year

Effective Period: 7/1/2015 - 6/30/2016
Wage Rate per Hour: $38.66
Supplemental Benefit Rate per Hour: $12.45

(Bricklayer District Council)

ROOFER
(Ratio of Apprentice to Journeyperson: 1 to 1, 1 to 2)

Roofer - First Year

Effective Period: 7/1/2015 - 6/30/2016
Wage and Supplemental Rate Per Hour: 35% of Journeyperson's Rate

Roofer - Second Year

Effective Period: 7/1/2015 - 6/30/2016
Wage and Supplemental Rate Per Hour: 50% of Journeyperson's Rate

Roofer - Third Year

Effective Period: 7/1/2015 - 6/30/2016
Wage and Supplemental Rate Per Hour: 60% of Journeyperson's Rate

Roofer - Fourth Year

Effective Period: 7/1/2015 - 6/30/2016

Wage and Supplemental Rate Per Hour: 75% of Journeyperson's Rate

(Local #8)

SHEET METAL WORKER
(Ratio of Apprentice to Journeyperson: 1 to 1, 1 to 3)

Sheet Metal Worker (0-6 Months)

Effective Period: 7/1/2015 - 6/30/2016
Wage Rate Per Hour: 25% of Journeyperson's rate
Supplemental Rate Per Hour: $6.24

Sheet Metal Worker (7-18 Months)

Effective Period: 7/1/2015 - 6/30/2016
Wage Rate Per Hour: 35% of Journeyperson's rate
Supplemental Rate Per Hour: $16.71

Sheet Metal Worker (19-30 Months)

Effective Period: 7/1/2015 - 6/30/2016
Wage Rate Per Hour: 45% of Journeyperson's rate
Supplemental Rate Per Hour: $23.00

Sheet Metal Worker (31-36 Months)

Effective Period: 7/1/2015 - 6/30/2016
Wage Rate Per Hour: 55% of Journeyperson's rate
Supplemental Rate Per Hour: $27.02

Sheet Metal Worker (37-42 Months)

Effective Period: 7/1/2015 - 6/30/2016
Wage Rate Per Hour: 60% of Journeyperson's rate
Supplemental Rate Per Hour: $29.06

Sheet Metal Worker (43-48 Months)

Effective Period: 7/1/2015 - 6/30/2016
Wage Rate Per Hour: 70% of Journeyperson's rate
Supplemental Rate Per Hour: $33.10

Sheet Metal Worker (49-54 Months)

Effective Period: 7/1/2015 - 6/30/2016
Wage Rate Per Hour: 75% of Journeyperson's rate
Supplemental Rate Per Hour: $35.12

Sheet Metal Worker (55-60 Months)

Effective Period: 7/1/2015 - 6/30/2016
Wage Rate Per Hour: 80% of Journeyperson's rate
Supplemental Rate Per Hour: $37.15

(Local #28)

SIGN ERECTOR
(Ratio of Apprentice to Journeyperson: 1 to 1, 1 to 4)

Sign Erector - First Year: 1st Six Months

Effective Period: 7/1/2015 - 6/30/2016
Wage Rate Per Hour: 35% of Journeyperson's rate
Supplemental Rate Per Hour: $13.18

Sign Erector - First Year: 2nd Six Months

Effective Period: 7/1/2015 - 6/30/2016
Wage Rate Per Hour: 40% of Journeyperson's rate
Supplemental Rate Per Hour: $14.95

Sign Erector - Second Year: 1st Six Months

Effective Period: 7/1/2015 - 6/30/2016
Wage Rate Per Hour: 45% of Journeyperson's rate
Supplemental Rate Per Hour: $16.74

Sign Erector - Second Year: 2nd Six Months

Effective Period: 7/1/2015 - 6/30/2016
Wage Rate Per Hour: 50% of Journeyperson's rate
Supplemental Rate Per Hour: $18.52

Sign Erector - Third Year: 1st Six Months

Effective Period: 7/1/2015 - 6/30/2016
Wage Rate Per Hour: 55% of Journeyperson's rate
Supplemental Rate Per Hour: $24.94

Sign Erector - Third Year: 2nd Six Months

Effective Period: 7/1/2015 - 6/30/2016
Wage Rate Per Hour: 60% of Journeyperson's rate
Supplemental Rate Per Hour: $26.87

Sign Erector - Fourth Year: 1st Six Months

Effective Period: 7/1/2015 - 6/30/2016
Wage Rate Per Hour: 65% of Journeyperson's rate
Supplemental Rate Per Hour: $29.47

Sign Erector - Fourth Year: 2nd Six Months

Effective Period: 7/1/2015 - 6/30/2016
Wage Rate Per Hour: 70% of Journeyperson's rate
Supplemental Rate Per Hour: $31.46

Sign Erector - Fifth Year

Effective Period: 7/1/2015 - 6/30/2016
Wage Rate Per Hour: 75% of Journeyperson's rate
Supplemental Rate Per Hour: $33.43

Sign Erector - Sixth Year

Effective Period: 7/1/2015 - 6/30/2016
Wage Rate Per Hour: 80% of Journeyperson's rate
Supplemental Rate Per Hour: $35.41

(Local #137)

STEAMFITTER
(Ratio of Apprentice to Journeyperson: 1 to 1, 1 to 3)

Steamfitter - First Year

Effective Period: 7/1/2015 - 6/30/2016
Wage Rate and Supplemental Per Hour: 40% of Journeyperson's rate

Steamfitter - Second Year

Effective Period: 7/1/2015 - 6/30/2016
Wage Rate and Supplemental Rate Per Hour: 50% of Journeyperson's rate.

Steamfitter - Third Year

Effective Period: 7/1/2015 - 6/30/2016
Wage Rate and Supplemental Rate per Hour: 65% of Journeyperson's rate.

Steamfitter - Fourth Year

Effective Period: 7/1/2015 - 6/30/2016
Wage Rate and Supplemental Rate Per Hour: 80% of Journeyperson's rate.

Steamfitter - Fifth Year

Effective Period: 7/1/2015 - 6/30/2016
Wage Rate and Supplemental Rate Per Hour: 85% of Journeyperson's rate.

(Local #638)

STONE MASON - SETTER
(Ratio Apprentice of Journeyperson: 1 to 1, 1 to 2)

Stone Mason - Setters - First 750 Hours

Effective Period: 7/1/2015 - 6/30/2016
Wage and Supplemental Rate Per Hour: 50% of Journeyperson's rate

Stone Mason - Setters - Second 750 Hours

Effective Period: 7/1/2015 - 6/30/2016
Wage Rate Per Hour: 60% of Journeyperson's rate
Supplemental Rate Per Hour: 50% of Journeyperson's rate

Stone Mason - Setters - Third 750 Hours

Effective Period: 7/1/2015 - 6/30/2016
Wage Rate Per Hour: 70% of Journeyperson's rate
Supplemental Rate Per Hour: 50% of Journeyperson's rate

Stone Mason - Setters - Fourth 750 Hours

Effective Period: 7/1/2015 - 6/30/2016
Wage Rate Per Hour: 80% of Journeyperson's rate
Supplemental Rate Per Hour: 50% of Journeyperson's rate

Stone Mason - Setters - Fifth 750 Hours

Effective Period: 7/1/2015 - 6/30/2016
Wage Rate Per Hour: 90% of Journeyperson's rate
Supplemental Rate Per Hour: 50% of Journeyperson's rate

Stone Mason - Setters - Sixth 750 Hours

Effective Period: 7/1/2015 - 6/30/2016
Wage Rate Per Hour: 100% of Journeyperson's rate
Supplemental Rate Per Hour: 50% of Journeyperson's rate

(Bricklayers District Council)

TAPER
(Ratio of Apprentice to Journeyperson: 1 to 1, 1 to 4)

Drywall Taper - First Year

Effective Period: 7/1/2015 - 6/30/2016
Wage and Supplemental Rate Per Hour: 40% of Journeyperson's rate

Drywall Taper - Second Year

Effective Period: 7/1/2015 - 6/30/2016
Wage and Supplemental Rate Per Hour: 60% of Journeyperson's rate

Drywall Taper - Third Year

Effective Period: 7/1/2015 - 6/30/2016
Wage and Supplemental Rate Per Hour: 80% of Journeyperson's rate

(Local #1974)

TILE LAYER - SETTER
(Ratio of Apprentice to Journeyperson: 1 to 1, 1 to 4)

Tile Layer - Setter - First 750 Hours

Effective Period: 7/1/2015 - 6/30/2016

Wage and Supplemental Rate Per Hour: 50% of Journeyperson's rate

Tile Layer - Setter - Second 750 Hours

Effective Period: 7/1/2015 - 6/30/2016
Wage and Supplemental Rate Per Hour: 55% of Journeyperson's rate

Tile Layer - Setter - Third 750 Hours

Effective Period: 7/1/2015 - 6/30/2016
Wage and Supplemental Rate Per Hour: 65% of Journeyperson's rate

Tile Layer - Setter - Fourth 750 Hours

Effective Period: 7/1/2015 - 6/30/2016
Wage and Supplemental Rate Per Hour: 75% of Journeyperson's rate

Tile Layer - Setter - Fifth 750 Hours

Effective Period: 7/1/2015 - 6/30/2016
Wage and Supplemental Rate Per Hour: 85% of Journeyperson's rate

Tile Layer - Setter - Sixth 750 Hours

Effective Period: 7/1/2015 - 6/30/2016
Wage and Supplemental Rate Per Hour: 95% of Journeyperson's rate

(Local #7)

TIMBERPERSON
(Ratio of Apprentice to Journeyperson: 1 to 1, 1 to 6)

Timberperson - First Year

Effective Period: 7/1/2015 - 6/30/2016
Wage Rate Per Hour: 40% of Journeyperson's rate
Supplemental Rate Per Hour: $31.54

Timberperson - Second Year

Effective Period: 7/1/2015 - 6/30/2016
Wage Rate Per Hour: 50% of Journeyperson's rate
Supplemental Rate Per Hour: $31.54

Timberperson - Third Year

Effective Period: 7/1/2015 - 6/30/2016
Wage Rate Per Hour: 65% of Journeyperson's rate
Supplemental Rate Per Hour: $31.54

Timberperson - Fourth Year

Effective Period: 7/1/2015 - 6/30/2016
Wage Rate Per Hour: 80% of Journeyperson's rate
Supplemental Rate Per Hour: $31.54

(Local #1536)

NYC ADMINISTRATIVE CODE § 6-109 SCHEDULE OF "LIVING WAGES"

Contractors who provide the following services to the City of New York must post a copy of this Living Wage Schedule at their work site(s) as required by New York City Administrative Code § 6-109:

- **Building Services,**
- **Day Care Services,**
- **Food Services,**
- **Head Start Services,**
- **Homecare Services,**
- **Services to Persons with Cerebral Palsy, and**
- **Temporary Services.**

In accordance with NYC Administrative Code § 6-109, the Comptroller of the City of New York promulgated this schedule of living wages for the above services on contracts for non-emergency work in excess of the small purchase limit set by the Procurement Policy Board; contracting agencies must annex this schedule to such contracts.

This schedule is a compilation of separate determinations of the prevailing rate of wage and supplements made by the Comptroller for each trade classification listed herein pursuant to New York City Administrative Code section 6-109. The source of the wage and supplement rates, whether a collective bargaining agreement, survey data or other, is listed at the end of each classification.

A city service contractor or subcontractor that provides homecare services, day care services, head start services or services to persons with cerebral palsy must pay its covered employees that directly render such services in performance of the city service contract or subcontract no less than the living wage and must provide its employees health benefits (supplemental benefits) or must supplement their hourly wage rate by an amount no less than the health benefits supplement rate. This requirement applies for each hour that the employee works performing the city service contract or subcontract.

A city service contractor or subcontractor that provides building services, food services or temporary services must pay its employees that are engaged in performing the city service contract or subcontract no less than the living wage or the prevailing wage, whichever is greater. Where the living wage is greater than the prevailing wage, the city service contractor or subcontractor must either provide its employees health benefits or must supplement their hourly wage rate by an amount no less than the health benefits supplement rate. Where the prevailing wage is greater than the living wage, the city service contractor or subcontractor must provide its employees the prevailing wage and supplements. These requirements apply for each hour that the employee works performing the city service contract or subcontract.

The appropriate schedule of living wages must be posted at all work sites pursuant to NYC Administrative Code 6-109.

The schedule is applicable for work performed during the effective period, unless otherwise noted. You will be notified of any changes to this schedule by addenda published on our web site www.comptroller.nyc.gov. Schedules for future one-year periods will be published annually in the City Record on or about July 1st of each succeeding year and on our web site www.comptroller.nyc.gov.

The living wage rate and the health benefit supplement rate are known through June 30 of each year and those rates are listed in this schedule.

The living wage rates listed in this schedule may not include all hourly wage calculations for overtime, shift differential, Holiday, Saturday, Sunday or other premium time work. Similarly, this schedule does not set forth every living wage practice with which employers must comply.

Some of the rates in this schedule are based on collective bargaining agreements. These agreements are available for inspection by appointment. Requests for appointments may be made by calling (212) 669-4443, Monday through Friday between the hours of 9 a.m. and 5 p.m.

Answers to questions concerning prevailing wage practices may be obtained from the Classification Unit by calling (212) 669-7974. Please direct all other compliance issues to; Bureau of Labor Law, Attn: Wasyl Kinach, P.E., Office of the Comptroller, 1 Centre Street, Room 1122, New York, N.Y. 10007; Fax (212) 669-4002.

Contractors are solely responsible for maintaining original payroll records, which delineate, among other things, the hours each employee worked within a given classification. Contractors using rates and/or classifications not promulgated by the Comptroller do so at their own risk. Additionally, prior to bid, an agency's chief contracting officer must contact the Bureau of Labor Law to obtain a wage determination for a work classification not published in this schedule.

The information listed below is intended to assist you in meeting your living wage and prevailing wage obligation. Contractors are advised to review the Comptroller's Living Wage Schedule prior to submitting a bid for City work. Any wage rate error made by the contracting agency in the contract documents will not preclude a finding against the contractor for an underpayment of the applicable living wage or the applicable prevailing wage.

This schedule sets forth the living wage and benefit rates required to be annexed to and form part of the contract specifications for work covered by New York City Administrative Code § 6-109. Contractors performing such work are required to pay not less that the rates specified in this schedule for the applicable trade or occupation.

Benefits are paid for ***EACH HOUR WORKED*** unless otherwise noted.

Wasyl Kinach, P.E.
Director of Classifications
Bureau of Labor Law

TABLE OF CONTENTS

CLASSIFICATION	PAGE
BUILDING CLEANER AND MAINTAINER (OFFICE)	4
BUILDING CLEANER AND MAINTAINER (RESIDENTIAL)	4
CLEANER (PARKING GARAGE)	4
DAY CARE SERVICES	4
FOOD SERVICE EMPLOYEES	4
GARDENER	5
HEAD START SERVICES	5
HOMECARE SERVICES	6
SECURITY GUARD (ARMED)	6
SECURITY GUARD (UNARMED)	6
SERVICES TO PERSONS WITH CEREBRAL PALSY	7
TEMPORARY OFFICE SERVICES	7
WINDOW CLEANER	8

BUILDING CLEANER AND MAINTAINER (OFFICE)

For the above building service classification, see the Labor Law Section 230 Schedule.

BUILDING CLEANER AND MAINTAINER (RESIDENTIAL)

For the above building service classification, see the Labor Law Section 230 Schedule.

CLEANER (PARKING GARAGE)

For the above building service classification, see the Labor Law Section 230 Schedule.

DAY CARE SERVICES

Day Care Services

'Day Care Services' means provision of day care services through the city's center-based day care program administered under contract with the city's Administration for Children's Services. No other day care programs shall be covered, including family-based day care programs administered by city-contracted day care centers.

Effective Period: 7/1/2015 - 6/30/2016
Wage Rate per Hour: $10.00
Supplemental Benefit Rate per Hour: $1.50

(NYC Administrative Code §6-109)

FOOD SERVICE EMPLOYEES

Cook

Effective Period: 7/1/2015 - 6/30/2016
Wage Rate per Hour: $16.63
Supplemental Benefit Rate per Hour: $1.70

Cafeteria Attendant

Effective Period: 7/1/2015 - 6/30/2016
Wage Rate per Hour: $11.67
Supplemental Benefit Rate per Hour: $1.70

Counter Attendant

Effective Period: 7/1/2015 - 6/30/2016
Wage Rate per Hour: $11.22
Supplemental Benefit Rate per Hour: $1.70

Kitchen Helper / Dishwasher

Effective Period: 7/1/2015 - 6/30/2016
Wage Rate per Hour: $11.04
Supplemental Benefit Rate per Hour: $1.70

Overtime

Time and one half the regular hourly rate after 40 hours in any work week.

(Based on data from NYS Department of Labor Occupational Employment Statistics and US Department of Labor Bureau of Labor Statistics)

GARDENER

For the above building service classification, see the Labor Law Section 230 Schedule.

HEAD START SERVICES

Head Start Services

'Head Start Services' means provision of head start services through the city's center-based head start program administered under contract with the city's Administration for Children's Services. No other head start programs shall be covered.

Effective Period: 7/1/2015 - 6/30/2016
Wage Rate per Hour: $10.00
Supplemental Benefit Rate per Hour: $1.50

(NYC Administrative Code §6-109)

HOMECARE SERVICES

Home Care Services

'Homecare Services' means the provision of homecare services under the city's Medicaid Personal Care/Home Attendant or Housekeeping Programs, including but not limited to the In-Home Services for the Elderly Programs administered by the Department for the Aging.
For homecare services provided under the Personal Care Services program, the wage and supplemental benefit rate above shall apply only as long as the state and federal government maintain their combined aggregate proportionate share of funding and approved rates for homecare services in effect as of the date of the enactment of this section.
For contractors or subcontractors providing homecare services, the supplemental benefit rate may be waived by the terms of a bona fide collective bargaining agreement with respect to employees who have never worked a minimum of eighty (80) hours per month for two consecutive months for that covered employer, but such provision may not be waived for any employee once a minimum of eighty (80) hours for two consecutive months has been achieved.

Effective Period: 7/1/2015 - 6/30/2016
Wage Rate per Hour: $10.00
Supplemental Benefit Rate per Hour: $1.50

(NYC Administrative Code §6-109)

SECURITY GUARD (ARMED)

For the above building service classification, see the Labor Law Section 230 Schedule.

SECURITY GUARD (UNARMED)

For the above building service classification, see the Labor Law Section 230 Schedule.

SERVICES TO PERSONS WITH CEREBRAL PALSY

Services To Person With Cerebral Palsy

'Services to Persons with Cerebral Palsy' means provision of services which enable persons with cerebral palsy and related disabilities to lead independent and productive lives through an agency that provides health care, education, employment, housing and technology resources to such persons under contract with the city or the department of education.

Effective Period: 7/1/2015 - 6/30/2016
Wage Rate per Hour: $10.00
Supplemental Benefit Rate per Hour: $1.50

(NYC Administrative Code §6-109)

TEMPORARY OFFICE SERVICES

Administrative Assistant

Effective Period: 7/1/2015 - 6/30/2016
Wage Rate per Hour: $33.89
Supplemental Benefit Rate per Hour: None

Cashier

Effective Period: 7/1/2015 - 6/30/2016
Wage Rate per Hour: $11.50
Supplemental Benefit Rate per Hour: None

Clerk (various)

Effective Period: 7/1/2015 - 6/30/2016
Wage Rate per Hour: $15.50
Supplemental Benefit Rate per Hour: None

Computer Assistant

Effective Period: 7/1/2015 - 6/30/2016
Wage Rate per Hour: $20.12
Supplemental Benefit Rate per Hour: None

Data Entry Operator

Effective Period: 7/1/2015 - 6/30/2016
Wage Rate per Hour: $16.38
Supplemental Benefit Rate per Hour: None

Receptionist

Effective Period: 7/1/2015 - 6/30/2016
Wage Rate per Hour: $15.29
Supplemental Benefit Rate per Hour: None

Secretary (various)

Effective Period: 7/1/2015 - 6/30/2016
Wage Rate per Hour: $19.58
Supplemental Benefit Rate per Hour: None

Word Processor

Effective Period: 7/1/2015 - 6/30/2016
Wage Rate per Hour: $18.32
Supplemental Benefit Rate per Hour: None

Overtime
Time and one half the regular hourly rate after 40 hours in any work week.

(Based on data from NYS Department of Labor Occupational Employment Statistics and US Department of Labor Bureau of Labor Statistics or NYC Administrative Code §6-109)

WINDOW CLEANER

For the above building service classification, see the Labor Law Section 230 Schedule.

THE CITY OF NEW YORK
OFFICE OF THE COMPTROLLER
1 CENTRE STREET ROOM 1120
NEW YORK, N.Y. 10007-2341

TELEPHONE: (212) 669-3622
FAX NUMBER: (212) 669-8499

Leonard A. Mancusi
SENIOR ASSISTANT COMPTROLLER

ALAN G. HEVESI
COMPTROLLER

MEMORANDUM

November 6, 2000

To *Agency Chief Contracting Officers*

From: *Leonard A. Mancusi*

Re: *Security at Construction Sites*

Prior to the enactment of Administrative Code §6-109, security guards on construction sites were not subject to prevailing wages. Security guards under the New York State labor law are covered under §230 which provides that prevailing wages are to be paid for security guards in existing buildings. §6-109 of the Administrative Code which was enacted in 1996 closed this loophole by including all security guards working pursuant to a city contract as a prevailing wage trade.

Although some construction contract boilerplate language has been amended to include §6-109, sub-contractors performing security services have advised us that they were not aware of this provision and, since traditionally, security guards were not a covered trade on construction sites, and they were not advised by a prime contractor that they would have to pay prevailing wages, they have not been doing so.

To avoid the possibility of issuing stop payments against prime contractors for the failure of their security service sub-contractors to pay

prevailing wages, we suggest that you write to all your existing security guard sub-contractors and their primes and in the future, upon approval of a security guard sub-contractor, advise the contractors of their obligation to pay prevailing wages under §6-109 of the Administrative Code.

As always, your cooperation is appreciated.

LAM:er
ACCO.SECURITY AT SITES

Department of Design and Construction

INFRASTRUCTURE DIVISION
BUREAU OF DESIGN

VOLUME 2 OF 3

_____
Contractor

_____

Dated_____, 20___

_____

APPROVED AS TO FORM
CERTIFIED AS TO LEGAL AUTHORITY

_____
Acting Corporation Counsel

_____

Dated_____, 20___

_____

Department of Design and Construction

INFRASTRUCTURE DIVISION
BUREAU OF DESIGN

VOLUME 2 OF 3

PROJECT ID: QED1007

FOR THE CONSTRUCTION OF TRUNK AND DISTRIBUTION WATER MAINS IN ARVERNE BOULEVARD BETWEEN BEACH 59TH STREET AND BEACH 54TH STREET; ROCKAWAY BEACH BOULEVARD BETWEEN BEACH 54TH STREET AND BEACH 49TH STREET; BEACH 67TH STREET BETWEEN ROCKAWAY FREEWAY AND ROCKAWAY BEACH BOULEVARD; ROCKAWAY BEACH BOULEVARD BETWEEN BEACH 54TH STREET AND BEACH 53RD STREET; AND ROCKAWAY BEACH BOULEVARD BETWEEN BEACH 52ND STREET AND BEACH 49TH STREET

INCLUDING STORM AND SANITARY SEWER WORK

Together With All Work Incidental Thereto
BOROUGH OF QUEENS
CITY OF NEW YORK

CAC Industries, Inc.
Contractor

Dated April 18, , 20 16

APPROVED AS TO FORM
CERTIFIED AS TO LEGAL AUTHORITY

Acting Corporation Counsel

K.T. 7/2/15

Dated July 2 , 20 15

Department of Design and Construction

THE CITY OF NEW YORK
DEPARTMENT OF DESIGN AND CONSTRUCTION
DIVISION OF INFRASTRUCTURE

30-30 THOMSON AVENUE
LONG ISLAND CITY, NEW YORK 11101-3045
TELEPHONE (718) 391-1000
WEBSITE www.nyc.gov/buildnyc

VOLUME 3 OF 3

SCHEDULE A
ADDENDA NOS. 1 TO 4

FOR FURNISHING ALL LABOR AND MATERIALS NECESSARY AND REQUIRED FOR:

PROJECT ID: QED1007

FOR THE CONSTRUCTION OF TRUNK AND DISTRIBUTION WATER MAINS IN ARVERNE BOULEVARD BETWEEN BEACH 59TH STREET AND BEACH 54TH STREET; ROCKAWAY BEACH BOULEVARD BETWEEN BEACH 54TH STREET AND BEACH 49TH STREET; BEACH 67TH STREET BETWEEN ROCKAWAY FREEWAY AND ROCKAWAY BEACH BOULEVARD; ROCKAWAY BEACH BOULEVARD BETWEEN BEACH 54TH STREET AND BEACH 53RD STREET; AND ROCKAWAY BEACH BOULEVARD BETWEEN BEACH 52ND STREET AND BEACH 49TH STREET

INCLUDING STORM AND SANITARY SEWER WORK

Together With All Work Incidental Thereto
BOROUGH OF QUEENS
CITY OF NEW YORK

FOR THE DEPARTMENT OF ENVIRONMENTAL PROTECTION
PREPARED BY
IN-HOUSE DESIGN

June 23, 2015

15-190

SPECIFICATIONS AND STANDARDS OF NEW YORK CITY

The following New York City Department of Transportation (NYCDOT) reference documents are available on-line at: http://www.nyc.gov/html/ddc/html/pubs/pubs_infrastdts.shtml or for purchase between 9:00 A.M. and 3:00 P.M. at 55 Water St., Ground Floor, NYC, N.Y. 10041. Contact: Ms Vivian Valdez, Tel. (212) 839-9434

1. NYCDOT Standard Highway Specifications, November 1, 2010
2. NYCDOT Standard Highway Details of Construction, July 1, 2010
3. NYCDOT Division of Street Lighting Specifications
4. NYCDOT Division of Street Lighting Standard Drawings
5. NYCDOT Standard Specifications for Traffic Signals
6. NYCDOT Standard Drawings for Traffic Signals

The following reference documents for New York City Department of Environmental Protection (NYCDEP) are available on-line at: http://www.nyc.gov/html/ddc/html/pubs/pubs_infrastdts.shtml or for pick up between 8:00 A.M. and 4:00 P.M. at 30-30 Thomson Avenue, 3rd Floor, Division of Infrastructure, Long Island City, N.Y. 11101.
Contact: Mr. Waqar Ahmad, Tel. (718) 391-2056

1. NYCDEP Standard Sewer and Water Main Specifications, July 1, 2014
2. NYCDEP Instructions for Concrete Specifications, Jan. 92
3. NYCDEP General Specification 11-Concrete, November 1991
4. NYCDEP Sewer Design Standards, (September 2007) Revised January 2009

The following reference documents for New York City Department of Environmental Protection (NYCDEP) are available on-line at: http://www.nyc.gov/html/ddc/html/pubs/pubs_infrastdts.shtml or for pick up between 8:00 A.M. and 4:00 P.M. at 30-30 Thomson Avenue, 3rd Floor, Division of Infrastructure, Long Island City, N.Y. 11101.
Contact: Mr. Robert Kuhlmann, Tel. (718) 391-2145

1. NYCDEP Water Main Standard Drawings
2. Specifications for Trunk Main Work, dated July 2014
3. Standards for Green Infrastructure, latest version, available only on-line at: http://www.nyc.gov/html/dep/pdf/green_infrastructure/bioswales-standard-designs.pdf

Water main work material specifications are available at the Department of Environmental Protection, 59-17 Junction Boulevard, 3rd Floor Low-Rise Building, Flushing, N.Y. 11373-5108.
Contact: Mr. Tarlock Sahansra, P.E., Tel. (718) 595-5302
E-mail: TSAHANSRA@DEP.NYC.GOV

Standard Specifications and Drawings for New York City Fire Department Communications facilities are available from the FDNY Facilities Management Bureau, Plant Operations Engineering, 316 Sgt. Beers Avenue Cluster 1 Box 16, Fort Totten, N.Y. 11359.
Contact: Mr. Ed Durkin, Tel. (718) 281-3933

Tree Planting Standards of the City of New York Parks & Recreation are available at the following Department of Parks & Recreation website: http://www.nycgovparks.org/pagefiles/53/Tree-Planting-Standards.pdf

SPECIFICATIONS AND STANDARDS OF PRIVATE UTILITIES

The Following reference document for Private Utility Work is available for pick up between 8:30 A.M. and 4:00 P.M. at 30-30 Thomson Avenue, First Floor Bid Procurement Room, L.I.C., N.Y. 11101.

1. CET SPECIFICATIONS AND SKETCHES dated November 2010

(NO TEXT ON THIS PAGE)

SCHEDULE "A"

(GENERAL CONDITIONS TO CONSTRUCTION CONTRACT)
(INCLUDING GENERAL CONDITIONS RELATED TO ARTICLE 22 - INSURANCE)

PART I. REQUIRED INFORMATION

INFORMATION FOR BIDDERS SECTION 26 BID SECURITY The **Contractor** shall obtain a bid security in the amount indicated to the right.	Required provided the TOTAL BID PRICE set forth on the Bid Form is $1,000,000 or more. Certified Check: 2% of Bid Amount or Bond: 10% of Bid Amount
INFORMATION FOR BIDDERS SECTION 26 PERFORMANCE AND PAYMENT BONDS The **Contractor** shall obtain performance and payment bonds in the amount indicated to the right.	Required for contracts in the amount of $1,000,000 or more. Performance Security and Payment Security shall each be in an amount equal to 100% of the Contract Price.
CONTRACT ARTICLE 14. DATE FOR SUBSTANTIAL COMPLETION The **Contractor** shall substantially complete the **Work** in the number of calendar days indicated to the right.	See Page SA-4
CONTRACT ARTICLE 15. LIQUIDATED DAMAGES If the **Contractor** fails to substantially complete the **Work** within the time fixed for substantial completion plus authorized time extensions or if the **Contractor**, in the sole determination of the **Commissioner**, has abandoned the **Work**, the **Contractor** shall pay to the **City** the amount indicated to the right.	For Each Consecutive Calendar Day Over Substantial Completion Time: $1,500.00
CONTRACT ARTICLE 17. SUB-CONTRACTOR The **Contractor** shall not make subcontracts totaling an amount more than the percentage of the total **Contract** price indicated to the right.	Not to Exceed 35% of the **Contract** Price
CONTRACT ARTICLE 21. RETAINAGE The **Commissioner** shall deduct and retain until the substantial completion of the **Work** the percent value of the **Work** indicated to the right.	5% of the Value of the **Work**
CONTRACT ARTICLE 22. **(Per Directions Indicated To The Right)**	See pages SA-5 through SA-9

CONTRACT ARTICLE 24. DEPOSIT GUARANTEE As security for the faithful performance of its obligations, the **Contractor**, upon filing its requisition for payment on **Substantial Completion**, shall deposit with the **Commissioner** a sum equal to the percentage of the **Contract** price indicated to the right.	1% of **Contract** Price
CONTRACT ARTICLE 24. PERIOD OF GUARANTEE Periods of maintenance and guarantee other than the period set forth in **Article 24.1** are indicated to the right.	Eighteen (18) Months, excluding Trees Twenty-Four (24) Months for Tree Planting
CONTRACT ARTICLE 74. STATEMENT OF WORK The **Contractor** shall furnish all labor and materials and perform all **Work** in strict accordance with the **Contract Drawings**, **Specifications,** and all **Addenda** thereto.	See **Contract Article 74**
CONTRACT ARTICLE 75. COMPENSATION TO BE PAID TO CONTRACTOR The **City** shall pay and the **Contractor** shall accept in full consideration for the performance of the **Contract**, subject to additions and deductions as provided in **Contract Article 75**, this said sum being the amount at which the **Contract** was awarded to the **Contractor** at a public letting thereof, based upon the **Contractor's** bid for the **Contract.**	See **Contract Article 75**
CONTRACT ARTICLE 78. PARTICIPATION BY MINORITY-OWNED AND WOMEN-OWNED BUSINESS ENTERPRISES IN CITY PROCUREMENT	See M/WBE Utilization Plan in the Bid Booklet

STANDARD HIGHWAY SPECIFICATIONS **SECTION 6.40** **LIQUIDATED DAMAGES FOR** **ENGINEER'S FIELD OFFICE** If the Contractor fails to satisfactorily provide the field office and all equipment specified in **Section 6.40 - Engineer's Field Office**, and/or if a cited deficiency exceed seventy two (72) hours after notice from the Engineer in writing, or is permitted to recur, liquidated damages will be assessed in the amount specified herein for each subsequent calendar day or part thereof that a cited deficiency resulting in nonpayment, as described in **Section 6.40.5**, is not corrected.	For Each Calendar Day of Deficiency: $250.00
STANDARD HIGHWAY SPECIFICATIONS **SECTION 6.70** **LIQUIDATED DAMAGES FOR** **MAINTENANCE AND PROTECTION OF TRAFFIC**	For each instance of failure to comply with the Maintenance and Protection of Traffic requirements within three (3) hours after written notice from the Engineer: $250.00 For each and every hour of failing to open the entire width of roadway to traffic the morning following a night/weekend work operation: $500.00
STANDARD HIGHWAY SPECIFICATIONS **SECTION 7.13** **LIQUIDATED DAMAGES FOR** **MAINTENANCE OF SITE** If the Contractor fails to comply, within three (3) consecutive hours after written notice from the Engineer, with the requirements of **Section 7.13 - Maintenance of Site**, the Contractor shall pay to the City of New York, until such notice has been complied with or rescinded, the sum specified above per calendar day, for each instance of such failure, as liquidated damages and not as a penalty, for such default.	For Each Calendar Day, for Each Occurrence: $250.00

Date for Substantial Completion (Reference: Article 14)

The Contractor shall substantially complete the Work within the Final Contract Duration determined in accordance with the terms and conditions set forth herein.

The Base Contract Duration for this project is 365 consecutive calendar days ("ccds").

The Final Contract Duration shall be the Base Contract Duration when a check mark is indicated before the word "NO", below, and shall be the Base Contract Duration adjusted by the table set forth below when a check mark is indicated before the word "YES", below.

√ YES _____ NO

When the Final Contract Duration is indicated above to be adjusted by the table below, the table may increase the Base Contract Duration depending on the date of scheduled substantial completion to avoid a scheduled substantial completion of the Work during the winter months. The date of the scheduled substantial completion shall be determined by adding the Base Contract Duration to the date specified to commence work in the written Notice To Proceed. The Final Contract Duration shall then be determined as follows:

(a) Find the row that corresponds to the month of the substantial completion based on the Base Contract Duration added to the date specified to commence work in the written Notice To Proceed.
(b) Find the number of days to be added to the Base Contract Duration in the table below. Add that number of days to the Base Contract Duration to obtain the Final Contract Duration in consecutive calendar days.

Month Of Substantial Completion Based On The Base Contract Duration	Number Of Days Of Adjustment
January	150
February	120
March	90
April	60
May	30
June	0
July	0
August	0
September	0
October	0
November - December 15	0
December 16 - December 31	180

In addition, should Item No. 9.30 - STORM WATER POLLUTION PREVENTION exist in the Contract and the required Storm Water Pollution Prevention Plan (SWPPP) does not conform to NYSDEC's recommended Standards, an additional 60-ccds shall be added to the above Final Contract Duration.

(GENERAL CONDITIONS RELATING TO ARTICLE 22 - INSURANCE)

PART II. TYPES OF INSURANCE, MINIMUM LIMITS AND SPECIAL CONDITIONS

Note: All certificate(s) of insurance submitted pursuant to Contract Article 22.3.3 must be accompanied by a Certification by Broker consistent with Part III below and include the following information:

- **For each insurance policy, the name and NAIC number of issuing company, number of policy, and effective dates;**
- **Policy limits consistent with the requirements listed below;**
- **Additional insureds or loss payees consistent with the requirements listed below; and**
- **The number assigned to the Contract by the City (in the "Description of Operations" field).**

Insurance indicated by a blackened box (■) or by an X in a box (☒) to left will be required under this contract

TYPES OF INSURANCE (per Article 22 in its entirety, including listed paragraph)		MINIMUM LIMITS AND SPECIAL CONDITIONS
■ Commercial General Liability	Art. 22.1.1	The minimum limits shall be $3,000,000 per Occurrence and $6,000,000 per Project Aggregate applicable to this **Contract.** Additional Insureds: (1) City of New York, including its officials and employees, with coverage at least as broad as ISO Form CG 20 10 and CG 20 37. (2) All person(s) or organization(s), if any, that Article 22.1.1(b) of the **Contract** requires to be named as Additional Insured(s), with coverage at least as broad as ISO Form CG 20 26. The Additional Insured endorsement shall either specify the entity's name, if known, or the entity's title (e.g., Project Manager). (3) The New York City Transit Authority (NYCTA), Manhattan and Bronx Surface Transit Operation Authority (MaBSTOA), Staten Island Rapid Transit Operation Authority (SIRTOA), Metropolitan Transportation Authority (MTA), its subsidiaries and affiliated companies. The Contractor shall furnish two (2) certificates of insurance to and the policy shall be endorsed to provide thirty (30) days advance notice to the Director, Risk Management, MTA Risk and Insurance Management Standards, Enforcement and Claims Unit, 2 Broadway, 21st Floor, New York, NY 10004, of any material change and/or cancellation. (4) National Grid

■ Workers' Compensation	Art. 22.1.2	Workers' Compensation, Employers' Liability, and Disability Benefits Insurance: Statutory per New York State law without regard to jurisdiction. **Note:** The following forms are acceptable: (1) New York State Workers' Compensation Board Form No. C-105.2, (2) State Insurance Fund Form No. U-26.3, (3) New York State Workers' Compensation Board Form No. DB-120.1 and (4) Request for WC/DB Exemption Form No. CE-200. The City will not accept an ACORD form as proof of Workers' Compensation or Disability Insurance. Jones Act and U.S. Longshoremen's and Harbor Workers' Compensation Act: Statutory per U.S. Law. ■ Additional Requirements: (1) NYCTA "OUTSIDE CONTRACT" INSURANCE REQUIREMENTS: Workers' Compensation Insurance (including Employer's Liability Insurance) with limits of not less than $2,000,000, which limit may be met by a combination of primary and excess insurance meeting the statutory limits of New York State. (2) Two (2) certificates of such insurance shall be furnished to the Director, Risk Management, MTA Risk and Insurance Management Standards, Enforcement and Claims Unit, 2 Broadway, 21st Floor, New York, NY 10004.
■ Disability Benefits Insurance	Art. 22.1.2	
■ Employers' Liability	Art. 22.1.2	
☐ Jones Act	Art. 22.1.3	
☐ U.S. Longshoremen's and Harbor Workers Compensation Act	Art. 22.1.3	
☐ Builders' Risk	Art. 22.1.4	100% of Total Value of **Work** **Contractor** the Named Insured; the **City** both an Additional Insured and one of the loss payees as its interests may appear. If the **Work** does not involve construction of a new building or gut renovation work, the **Contractor** may provide an installation floater in lieu of Builders Risk insurance. Note: Builders Risk Insurance may terminate upon **Substantial Completion** of the **Work** in its entirety.
■ Commercial Auto Liability	Art. 22.1.5	$2,000,000 per accident combined single limit If vehicles are used for transporting hazardous materials, the **Contractor** shall provide pollution liability broadened coverage for covered vehicles (endorsement CA 99 48) as well as proof of MCS 90. Additional Insureds: (1) City of New York, including its officials and employees. (2) The New York City Transit Authority (NYCTA), Manhattan and Bronx Surface Transit Operation Authority (MaBSTOA), Staten Island Rapid Transit Operation Authority (SIRTOA), Metropolitan Transportation Authority (MTA), its subsidiaries and affiliated companies. (3)

☐ Contractors Pollution Liability Art. 22.1.6	$_____ per occurrence $_____ aggregate Additional Insureds: (1) City of New York, including its officials and employees. (2) (3)
☐ Marine Protection and Indemnity Art. 22.1.7(a)	$_____ each occurrence $_____ aggregate Additional Insureds: (1) City of New York, including its officials and employees. (2) (3)
☐ Hull and Machinery Insurance Art. 22.1.7(b)	$_____ per occurrence $_____ aggregate Additional Insureds: (1) City of New York, including its officials and employees. (2) (3)
☐ Marine Pollution Liability Art. 22.1.7(c)	$_____ per occurrence $_____ aggregate Additional Insureds: (1) City of New York, including its officials and employees. (2) (3)

[OTHER] Art. 22.1.8 ■ Railroad Protection Liability Policy (ISO-RIMA or equivalent form) approved by Permittor covering the work to be performed at the designated site and affording protection for damages arising out of bodily injury or death, physical damage to or destruction of property, including damage to the Insured's own property and conforming to the following: • Policy Endorsement CG 28 31 - Pollution Exclusion Amendment is required to be endorsed onto the policy when environmental-related work and/or exposures exist. • Indicate the Name and address of the Contractor to perform the work, the Contract Number and the name of the railroad property where the work is being performed and the Agency Permit. • Evidence of Railroad Protective Liability Insurance, must be provided in the form of the Original Policy. A detailed Insurance Binder (ACORD or Manuscript Form) will be accepted pending issuance of the Original Policy, which must be provided within thirty (30) days of the Binder Approval.	$2,000,000 per occurrence $6,000,000 annual aggregate Named Insureds: (1) The New York City Transit Authority (NYCTA), Manhattan and Bronx Surface Transit Operation Authority (MaBSTOA), Staten Island Rapid Transit Operation Authority (SIRTOA), MTA Capital Construction Company, Metropolitan Transportation Authority (MTA), including its subsidiaries and affiliates, and the City of New York (as Owner) and all other indemnified parties. (2)

[OTHER] Art. 22.1.8

■ Professional Liability

A. The Contractor's Professional Engineer shall maintain and submit evidence of Professional Liability Insurance in the minimum amount of $1,000,000 per claim. The policy or policies shall include an endorsement to cover the liability assumed by the Contractor under this Contract arising out of the negligent performance of professional services or caused by an error, omission or negligent act of the Contractor's Professional Engineer or anyone employed by the Contractor's Professional Engineer.

B. Claims-made policies will be accepted for Professional Liability Insurance. All such policies shall have an extended reporting period option or automatic coverage of not less than two (2) years. If available as an option, the Contractor's Professional Engineer shall purchase extended reporting period coverage effective on cancellation or termination of such insurance unless a new policy is secured with a retroactive date, including at least the last policy year.

[OTHER] Art. 22.1.8 ■ Engineer's Field Office **Section 6.40, Standard Highway Specifications**	Fire insurance, extended coverage and vandalism, malicious mischief and burglary, and theft insurance coverage in the amount of $40,000

[OTHER] Art. 22.1.8

■ The Following Additional Insurance Must Be Provided:

Umbrella/Excess Liability Insurance - The Contractor shall provide Umbrella/Excess Liability Insurance in the minimum amount of $10,000,000 per Occurrence and $10,000,000 in Aggregate. The policy terms and condition should be at least as broad as the underlying policies. The underlying policies should comply with the insurance provision as outlined by the contract. Defense cost should be in addition to the limit of liability. The City of New York, including its officials and employees, should be included as additional insured as respects to the noted project.

SCHEDULE A
(GENERAL CONDITIONS TO CONSTRUCTION CONTRACT)
(GENERAL CONDITIONS RELATING TO ARTICLE 22 – INSURANCE)

PART III. CERTIFICATES OF INSURANCE

All certificates of insurance (except certificates of insurance solely evidencing Workers' Compensation Insurance, Employer's Liability Insurance, and/or Disability Benefits Insurance) must be accompanied by one of the following:

(1) the Certification by Insurance Broker or Agent on the following page setting forth the required information and signatures;

-- OR --

(2) copies of all policies as certified by an authorized representative of the issuing insurance carrier that are referenced in such certificate of insurance. If any policy is not available at the time of submission, certified binders may be submitted until such time as the policy is available, at which time a certified copy of the policy shall be submitted.

CERTIFICATION BY INSURANCE BROKER OR AGENT

The undersigned insurance broker represents to the City of New York that the attached Certificate of Insurance is accurate in all material respects.

_____
[Name Of Broker or Agent (Typewritten)]

_____
[Address Of Broker or Agent (Typewritten)]

_____
[E-Mail Address Of Broker or Agent (Typewritten)]

_____
[Phone Number/Fax Number Of Broker or Agent (Typewritten)]

_____
[Signature Of Authorized Official, Broker or Agent]

_____
[Name And Title Of Authorized Official, Broker or Agent (Typewritten)]

State of .....)
) ss.:
County of .....)

Sworn to before me this _____ day of _____, 20___

_____
NOTARY PUBLIC FOR THE STATE OF _____

SCHEDULE "A"

(GENERAL CONDITIONS TO CONSTRUCTION CONTRACT)

PART IV. ADDRESS OF COMMISSIONER

Wherever reference is made in Article 7 or Article 22 to documents to be sent to the **Commissioner** (e.g., notices, filings, or submissions), such documents shall be sent to the address set forth below or, in the absence of such address, to the **Commissioner's** address as provided elsewhere in this **Contract**.

DDC Director, Insurance Risk Manager

30 - 30 Thomson Avenue, 4th Floor (IDCNY Building)

Long Island City, NY 11101

NO TEXT THIS PAGE

ATTACH TO CONTRACT DOCUMENTS

THE CITY OF NEW YORK
DEPARTMENT OF DESIGN AND CONSTRUCTION
INFRASTRUCTURE DIVISION
BUREAU OF DESIGN

PROJECT ID: QED1007

FOR THE CONSTRUCTION OF TRUNK AND DISTRIBUTION WATER MAINS IN ARVERNE BOULEVARD BETWEEN BEACH 59TH STREET AND BEACH 54TH STREET; ROCKAWAY BEACH BOULEVARD BETWEEN BEACH 54TH STREET AND BEACH 49TH STREET; BEACH 67TH STREET BETWEEN ROCKAWAY FREEWAY AND ROCKAWAY BEACH BOULEVARD; ROCKAWAY BEACH BOULEVARD BETWEEN BEACH 54TH STREET AND BEACH 53RD STREET; AND ROCKAWAY BEACH BOULEVARD BETWEEN BEACH 52ND STREET AND BEACH 49TH STREET

INCLUDING STORM AND SANITARY SEWER WORK

Together With All Work Incidental Thereto
BOROUGH OF QUEENS
CITY OF NEW YORK

ADDENDUM NO. 1

DATED: April 15, 2015

THIS ADDENDUM IS HEREBY MADE A PART OF THE CONTRACT DOCUMENTS

The New York City Department of Transportation Standard Highway Specifications, dated November 1, 2010, (which include, but are not limited to, "General Conditions", "Basic Materials of Construction", "Combined Materials of Construction", "Construction Methods", "Inspection and Testing of Materials, Adjustments for Deficiencies, and Maintenance", and "Supplemental Construction Methods"), as modified by addenda issued prior to the opening of bids, shall apply to and become a part of the contract.

All references contained herein are to the New York City Department of Transportation, Standard Highway Specifications, dated November 1, 2010. The said Specifications are hereby revised. Included hereunder are the following REVISIONS:

1. Amendments to Standard Highway Specifications, Volume I
2. Amendments to Standard Highway Specifications, Volume II, including Section 7.88 (Revised)and new Section 6.44 PO and 6.52 CG.

1. AMENDMENTS TO STANDARD HIGHWAY SPECIFICATIONS, VOLUME I

The following amendments to the Contract Requirements shall become a part of and apply to the contract:

[Added 12-09-2010]

1. Refer to Page 15, **Subsection 1.06.23.(C) CONFORMANCE WITH FEDERAL, STATE AND CITY AGENCIES;**
Add the following new paragraphs:

"The Contractor is notified that all vehicles that are owned, leased or operated by the Contractor or its subcontractors and used in connection with the Project shall comply with the following requirement:

Every truck, tractor, and tractor-trailer or semitrailer combination, having a gross vehicle weight rating of twenty-six thousand pounds or more, and a conventional cab configuration in which more than half of the engine length is forward of the foremost point of the windshield base, and the steering wheel hub is in the forward quarter of the vehicle length shall be equipped with a convex mirror on the front of such vehicle or combination of vehicles. Such convex mirror shall be adjusted so as to enable the operator of such vehicle or combination of vehicles to see all points on an imaginary horizontal line which is three feet above the road, is one foot directly forward from the midpoint of the front of such vehicle or combination of vehicles, and extends the full width of the front of such vehicle or combination of vehicles.

Any vehicle that does not comply with this provision may be prohibited from entering the Project site and/or supplying equipment or materials to the Project. The Contractor shall not be entitled to any damages as a result of such prohibition."

[Added 01-09-2011]

2. Refer to Page 240, **Subsection 4.16.5.(B) STUMP REMOVAL;**
Delete **Subsection 4.16.5.(B) STUMP REMOVAL**, in its entirety:
Substitute the following revised **Subsection 4.16.5.(B)**:

"(B) STUMP REMOVAL

1. Tree stumps designated to be removed and their roots shall be completely excavated to a minimum depth of three (3) feet below the existing grade. A portable stump cutter may be required in some locations. It may be necessary to remove concrete, asphalt, pavers, and/or other types of material surrounding the base of the stump. All excess debris, including chips from tree stumps, shall be removed and disposed of by the Contractor, away from the site prior to backfilling and the area shall be restored by completion of the workday, to the satisfaction of the Engineer. The disposal of tree stumps by burning in open fires will not be permitted.

2. All voids and excavations left after the removal of the stump and roots shall be backfilled to grade with clean earth fill. Fill shall be placed and compacted to a minimum of 95 percent of Standard Proctor Maximum Density by acceptable methods to the satisfaction of the Engineer. Where paving blocks exist, they are to be reset to the existing grade as directed.

3. Maximum safety and care must be used by Contractor during stump removal. The Contractor shall carefully protect against damage all existing trees, plants, curbs, sidewalks and utilities and other features to remain. The Contractor is responsible for locating and protecting underground utilities from damage during stump removal procedures. During stump grinding operations, plywood must be used to protect adjacent vehicles, real property, and pedestrians. If, when removing stumps, existing sidewalks or curbs are disturbed, the Contractor shall restore and/or reset these sidewalks and curbs, at no additional cost to the City. Restoration work shall be done to match the existing, to the satisfaction of the Engineer. All damaged trees, curbs, sidewalks, real property, vehicles and utilities must be addressed within three (3) days."

[Added 04-18-2011]

3. Refer to Pages 218 and 219, **Subsection 4.13.4.(H) PIGMENT;**
Delete the first three (3) paragraphs on page 219:
Substitute the following revised three (3) paragraphs:

"Where the color of the concrete is required to simulate the color of dark gray bluestone, the concrete shall be integrally pigmented to produce a gray color equivalent to: Davis Colors No. 884-3%; Lansco Color No. 437 "Strong Black" 5 lbs. per 94 lbs. Light Grey Portland Cement and 3 parts sand; L.M. Scofield "Cool Black No. 4"; Bayferrox Limestone 330, 2 lbs. per 94 lbs. Light Gray Portland Cement; or an approved equivalent, unless otherwise specified.

Where the color of the concrete is required to simulate the color of light to medium gray granite, the concrete shall be integrally pigmented to produce a gray color equal to: Davis Colors No. 884-1%; Lansco Color No. 437 "Strong Black" 2.5 lbs. per 94 lbs. Light Grey Portland Cement and 3 parts sand; L.M. Scofield "Cool Black No. 1"; Bayferrox Silver 330, 1 lb. per 94 lbs. Light Gray Portland Cement; or an approved equivalent, unless otherwise specified.

Where the sidewalk is designated to have a saw cut joint finish the color of the concrete shall be integrally pigmented to produce a gray color equivalent to L.M. Scofield "Landmarks Grey" K-157-4; L.M. Scofield "Cool Black No. 4"; Davis Colors No. 884-3%; Lansco Color No. 437 "Strong Black" 5 lbs. per 94 lbs. Light Grey Portland Cement and 3 parts sand; Bayferrox NYC Landmark Commission Gray, 3.5 lbs. per 94 lbs. Light Gray Portland Cement; or an approved equivalent, unless otherwise specified."

[Added 07-01-2011]

4. Refer to Page 14, **Subsection 1.06.23.(A) PERMITS;**
Delete line (b) under the first paragraph;
Substitute the following text:

"(b) Any planned work requiring a DOT Construction Permit that may potentially be within 100 feet of a bridge structure will be placed on a Bridge Hold. If any proposed work is within 100 feet of a bridge structure, permittees must submit a scaled drawing showing the work and exact location, along with the following:

- Plan layout of the project area.
- The scope of work.
- The contractor's means and methods.
- Indicate if work will be done of the bridge itself or its abutments, and the type of work.

If the work is more than 100 feet away from the bridge structure, permittees may send a certification by e-mail stating so. Either response must be sent to the Division of Bridges at bridgeshold@dot.nyc.gov for review and release prior to commencing work. Emergency work will not be placed on hold and shall proceed in accordance with the New York City Highway Rules, section 2-11 (g);

(c) Permits from the Department of Sanitation for use of City landfills;"

[Added 07-27-2011]

5. Refer to Page 37, **Subsection 1.06.46.(A) 6. Sign Graphics;**
   Delete article "a." beginning with the words "All visual components of the sign are in an Adobe *.pdf file, . . ." and ending with the words ". . . DDC to the Contractor (on a CD or via E-mail) for printing.", in its entirety;
   Substitute the following revised article "a":

"a. All visual components of the sign are in an Adobe *.pdf file, which is provided by the Commissioner's representative. The file is not to be altered for composition, type font or image from the version provided by DDC. The Commissioner's representative shall provide a complete file with data and image. The digital file shall be provided by DDC to the Contractor (on a CD or via E-mail) for printing."

[Added 09-27-2012]

6. Refer to Page 36, **Subsection 1.06.46. Project Sign;**
   Delete the words "Unless otherwise specified in the Special Provisions of the contract, the following shall apply:";
   Substitute the following revised text:

"The Contractor is notified that he shall be required to furnish, install, maintain, and remove, when directed, Construction Project Information Signs (CPIS) as per Sec. 2-02(c)(4) and (5) of the NYC DOT Highway Rule and the cost shall be deemed included under all scheduled items of the contract. In addition, unless otherwise specified in the Special Provisions of the contract, the following Project Sign shall also apply:"

[Added 04-08-2013]

7. Refer to Page 200, **Subsection 4.11.2.(B), first paragraph, sixth line;**
   Delete the word "porcelain,".

8. Refer to Page 201, **Subsection 4.11.3.(B) FILL AND BACKFILL, second and third paragraphs;**
   Delete the second and third paragraphs under Subsection 4.11.3.(B), in their entirety;
   Substitute the following revised two paragraphs:

"Glass or Recycled Porcelain Aggregate (RPA) from recycling facilities that meets the requirements of **Subsection 4.11.3.(E)** for Glass and **Subsection 4.11.3.(F)** for RPA shall be considered suitable material for mixing with fill provided the Contractor maintains the gradations specified herein. However, glass shall not be placed in contact with synthetic liners, geogrids, geotextiles or other geosynthetics.

Glass and/or RPA incorporated into fill shall be thoroughly mixed with other suitable material so that glass, RPA or combination of both constitutes no more than 30 percent by volume anywhere in the fill as visually determined by the Engineer."

9. Refer to Page 202, **Subsection 4.11.3.(E) GLASS;**
Add the following new **Subsection 4.11.3.(F) RECYCLED PORCELAIN AGGREGATE (RPA):**

"(F) RECYCLED PORCELAIN AGGREGATE (RPA)

All porcelain to be used as RPA shall be crushed by a New York City Department of Environmental Protection (NYCDEP) approved recycling facility to a maximum particle size of 3/8 inch and graded to meet the gradation specified above for use in either fill, backfill or select fill, as may be required. RPA from any other source will not be permitted. The NYCDEP approved recycling facility will also certify that the RPA being furnished is free from organic material and other unsuitable material.

Should the Contractor desire to use RPA in his fill or backfill material, he shall contact Mr. Vasyl Kravchyk at NYCDEP (Tel. No. 718-595-7512) to determine the availability of RPA and from which recycling facility it can be obtained.

The Contractor shall be required to make arrangement with the recycling plant, at least two (2) weeks in advance of when he would need the material, to schedule the time, date and quantity available for pickup. The Contractor shall be required to furnish the recycling facility with a complete list of his trucks involved in transporting the material, which shall include the name of the registered owner (Contractor), Consumer Affairs or DOS Permit numbers, body license plate number, and truck volume. This information must be supplied to the facility prior to the start of picking up the RPA.

Weight ticket receipt slips given by the recycling facility to each truck driver picking up RPA shall be collected by the Contractor and given to the Engineer upon delivering fill or backfill material to the site that contains RPA, and the Contractor agrees and warrants that in obtaining the RPA that such material has originated only from a NYCDEP approved recycling plant and it has not been mixed with porcelain material from any other source.

The Contractor shall be required to transport said material from the approved recycling facility to his yard for storage and mixing with his fill material; however, there is not guarantee that the material will actually be available.

The Contractor is advised that there is no guarantee that RPA will in fact be available for his use from a NYCDEP approved recycling plant and he shall make no claim against the City for loss of anticipated profits should the material not be available upon request by the Contractor.

All excess RPA not used in the fill or backfill shall remain the property of the DDC Contractor.

The Contractor must comply with all rules and regulations of the Department of Transportation and the Department of Environmental Protections governing the use of RPA in its fill and backfill material."

10. Refer to Pages 218 and 219, **Subsection 4.13.4.(H) PIGMENTING, first four paragraphs;**
Delete the first four paragraphs under Subsection 4.13.4.(H), in their entirety;
Substitute the following revised four paragraphs:

"Where pigmenting is specified, the concrete sidewalks shall be pigmented with an admixture complying with the requirements of **Section 2.19** and the following requirements:

'Commercial Gray': In commercial districts C4–4 through C4–7, C5 and C6, as defined in the Zoning Resolution of the City of New York, and in areas under the jurisdiction of the Lower Manhattan Development Corporation the color of the concrete shall be integrally pigmented to produce a gray color equivalent to L.M. Scofield 'Landmarks Grey' K-157-4; L.M. Scofield 'Cool Black No. 4'; Davis Colors No. 884-3%; Lansco Color No. 437 'Strong Black' 5 lbs. per 94 lbs. Light Grey Portland Cement and 3 parts sand; Bayferrox NYC Landmark Commission Gray, 3.5 lbs. per 94 lbs. Light Gray Portland Cement; or an approved equivalent, unless otherwise specified.

'Bluestone': Where the color of the concrete is required to simulate the color of dark gray bluestone, the concrete shall be integrally pigmented to produce a gray color equivalent to: Davis Colors No. 884-3%; Lansco Color No. 437 'Strong Black' 5 lbs. per 94 lbs. Light Grey Portland Cement and 3 parts sand; L.M. Scofield 'Cool Black No. 4'; Bayferrox Limestone 330, 2 lbs. per 94 lbs. Light Gray Portland Cement; or an approved equivalent, unless otherwise specified.

'Granite': Where the color of the concrete is required to simulate the color of light to medium gray granite, the concrete shall be integrally pigmented to produce a gray color equal to: Davis Colors No. 884-1%; Lansco Color No. 437 'Strong Black' 2.5 lbs. per 94 lbs. Light Grey Portland Cement and 3 parts sand; L.M. Scofield 'Cool Black No. 1'; Bayferrox Silver 330, 1 lb. per 94 lbs. Light Gray Portland Cement; or an approved equivalent, unless otherwise specified."

[Added 05-24-2013]

11. Refer to Page 14, **Subsection 1.06.23.(A) PERMITS**, first paragraph as modified by Article 4 on page A1-1b;
Add the following new text:

"(d) All necessary permits from the Department of Environmental Protection which may include, but are not limited to, permits for use of City water."

12. Refer to Page 14, **Subsection 1.06.23.(A) PERMITS**, second paragraph;
Add the following as the third paragraph:

"No fee permits for use of City water necessary to complete roadway pavement reconstruction project in conjunction with installation of sewers and/or water mains, will be issued by the Department of Environmental Protection. However, for all other type projects (such as installation of sidewalks, installation of pedestrian ramps, pavement milling, resurfacing, rehabilitation of retaining walls, and bridge reconstruction type projects) the Contractor will be required to obtain the water use permit at its own cost."

[Added 08-05-2013]

13. Refer to page 116, second paragraph up from the bottom of the page, first line;
Change the words "Concrete of Type IA and IIA shall have . . ." to read "Concrete of Type IA, IIA and IIIA shall have . . ."

[Added 09-04-2013]

14. Refer to page 100, **Subsection 3.01.3.(C)1.(c)**;
Delete the last two lines of text beginning with the words "The proportion of reclaimed asphalt pavement permitted within each mix . . .";
Substitute the following sentence: "The proportion of reclaimed asphalt pavement permitted within each mix shall be not less than 30 percent for the top and bottom courses as per Local Law #71 of 2011."

15. Refer to page 110, **Subsection 3.05.2.(A)**, **Table 3.05-I**;
Insert the following text at the bottom of **Table 3.05-I**:

"Note: The above proportions shown for non-High-Early mixes shall be modified by pozzolan substitutes as per **Subsection 3.05.4**."

16. Refer to page 112, **Subsection 3.05.3.(C)**, second paragraph;
Delete the second paragraph in its entirety;
Substitute the following paragraph:

"Water shall be potable and drawn from municipal water mains."

17. Refer to page 113, first line of text, beginning with the words "condition making up one (1) cubic yard of concrete.";
Insert the following sentence between the words "condition making up one (1) cubic yard of concrete." and "The range of water-cement ratio within which the . . .":

"The calculated yield of the mix shall be within ± 2% of the Theoretical one (1) cubic yard."

18. Refer to Page 113, second paragraph beginning with the words "The Contractor may substitute Portland cement . . .";
Delete the second paragraph under **Subsection 3.05.4.**, in its entirety;
Substitute the following revised paragraph:

"With the exception of high-early strength concrete, the Contractor shall be required to substitute Portland cement with pozzolans (Fly Ash or GGBFS) such that the maximum amount of Portland cement per cubic yard of concrete does not exceed 400 pounds, and with the use of an approved non-corrosive, non-chloride admixture as required to obtain a minimum compressive strength of 3,000 psi in seven (7) days. For high-early strength concrete the Contractor may substitute Portland cement with pozzolans (Fly Ash or GGBFS), pound for pound, up to 20% (or up to 25% for tidal/sea water spray areas) of the weight of cement specified for any concrete mixture provided the Contractor can obtain a minimum compressive strength of 3,000 p.s.i. in three (3) days. The Contractor, immediately following but not later than eight weeks after the date of the Contractor's Notice to Proceed, shall file with the Engineer, Age-Strength data of the job mix he proposes to use for the various ambient temperatures anticipated during the period of concrete placement. This data shall be presented in both tabular and graphical form for those various ambient temperatures with a maximum setting period of seven (7) days for Class B-32 concrete or seventy-two (72) hours for High-Early Strength Concrete."

19. Refer to Page 115, **TABLE 3.05-III – INGREDIENT MATERIALS;**
Change in the third row, second column, the type of Portland Cement from "Type III*" to read "Type II or Type III*"

20. Refer to page 132, **Subsection 3.06.3.(D)**;
Change the words "Water shall be drawn from mains owned by The City of New York." to read "Water shall be potable and drawn from municipal water mains."

21. Refer to page 133, **Subsection 3.07.3.(D)**;
Change the words "Water shall be drawn from mains owned by or supplying water to The City of New York." to read "Water shall be potable and drawn from municipal water mains."

22. Refer to page 134, **Subsection 3.08.4.(D)**;
Change the words "Water shall be drawn from mains owned by or supplying water to The City of New York." to read "Water shall be potable and drawn from municipal water mains."

23. Refer to Page 166, **Subsection 4.05.2.(A)**;
Delete **Subsection 4.05.2.(A)**, in their entirety;
Substitute the following revised **Subsection 4.05.2.(A)**:

"(A) Concrete Pavement shall be of the following types:

Type 1--Non-reinforced
Type 2--Reinforced (Unpigmented or pigmented if specified)
Type 3--High Early Strength Reinforced (Unpigmented or pigmented if specified)

Type 2 and Type 3 pavements shall consist of a concrete surface course, which shall be unpigmented or pigmented if specified, laid on a concrete base course, which may or may not be pigmented at the Contractor's option, while the base course is still plastic, of the thickness shown on the Contract Drawings, with reinforcement placed between the surface and base courses."

24. Refer to Page 166, **Subsection 4.05.3.(A)**;
Insert the following new **Subsection 4.05.3.(A1)**:

"(A1) PIGMENTING

Where pigmenting is specified, the surface course of the concrete bus pad shall be pigmented with an admixture complying with Section 2.19 and the following requirements:

Where the color of the concrete is required to simulate the red color of the Red Bus Lane Pavement Overlay (Item 6.44 POR in Section 6.44 PO), the surface course concrete shall be integrally pigmented to produce a red color equivalent to Scofield's quarry red.

Except for the use of an air-entraining agent complying with ASTM Designation C 260 and water reducing admixtures complying with ASTM Designation C 494 used in combination with the Pigment Admixture as per the pigment manufacturer's instruction, no other admixtures (including, but not limited to, calcium chloride) shall be used unless stated in writing by the manufacturer of the Pigment Admixture to be of no consequence to the colorfastness of the concrete mixture and is approved by the Engineer.

All pigmented concrete at different locations shall be identical, unless otherwise directed. Variations in color/tint/hue will not be acceptable. Therefore, the same brand and type of cement and the same source and type of aggregate shall be used throughout the project.

Prior to the mix design being made, the cement intended for use shall be checked to determine that its lightness/darkness is similar to the cement used in the original approved sample. The Pigmented Admixture shall be added in the standard proportion specified by the manufacturer."

25. Refer to Page 170, **Subsection 4.05.5.(A) GENERAL**;
Insert the following two new paragraphs:

"For pigmented concrete, the Contractor shall within eight weeks of the notice to proceed, submit the name of its proposed roadway installer upon which his bid is based, along with their respective work history experience in placing pigmented concrete. The installer shall have documented experience in working with pigmented concrete.

Prior to making any field samples and the placing of any pigmented concrete, the Contractor, its concrete supplier, installer, cement producer, laboratory, the pigmented admixture's representative, and the Engineer shall meet and agree on the specifications and methods of handling the pigmented concrete."

26. Refer to Page 183, **Subsection 4.05.9. PRICES TO COVER**, 4th line;
Insert in the fourth line, the words "pigment when specified" between the words "specifications, including, but not limited to," and "furnishing and installing . . .":

27. Refer to Page 183, **Subsection 4.05.9. PRICES TO COVER;**
Insert the following two new Items to the list of Item Nos. at the bottom of **Subsection 4.05.9:**

"4.05 ACP	REINFORCED CONCETE PAVEMENT (BUS STOPS)(PIGMENTED)	C.Y.
4.05 AXP	HIGH-EARLY STRENGTH REINFORCED CONCRETE PAVEMENT (BUS STOPS)(PIGMENTED)	C.Y."

[Added 04-15-2015]

28. Refer to Page 12, the second page of CONTRACTOR CODE OF CONDUCT;
Delete the text on page 12, in its entirety;
Substitute the revised text as contained on the following page A1-1i.

29. Refer to Page 15, Subsection 1.06.23.(B) DISPOSAL OF CONSTRUCTION WASTE;
Delete Subsection 1.06.23.(B) DISPOSAL OF CONSTRUCTION WASTE, in its entirety;
Substitute the following text:

"(B) DISPOSAL OF CONSTRUCTION WASTE

The Contractor shall dispose of all waste materials in a legal and proper manner. Should the facilities of the New York City Department of Sanitation be used, waste material shall be disposed of in accordance with the rules and regulations of the Department of Sanitation. The Contractor shall submit an affidavit to the Commissioner indicating that he has complied with said rules and regulations, the site used, and proof of purchase of dump tickets. Should the Contractor use a site other than the Department of Sanitation, the Contractor shall submit an affidavit to the Commissioner indicating that he has complied with all laws for removal of waste material, the site used, and a paid receipt. In addition, should the facilities used be located in the State of New York, it shall be a Solid Waste Management Facility registered with the New York State Department of Environmental Conservation, Division of Solid & Hazardous Materials. Failure to comply with this provision shall be deemed a material breach of this contract."

30. Refer to Pages 20 and 21, Subsection 1.06.25. Schedule of Operations;
Delete the last paragraph of Subsection 1.06.25., in its entirety;
Substitute the following paragraph:

"The Contractor shall submit weekly progress status update reports showing its anticipated work schedule for the upcoming week or as otherwise directed by the Engineer. Timely submission of these weekly progress schedules are critical for preparation of the Weekly Construction Bulletin to be prepared by the Construction Community Liaison or project staff. If the Contractor fails to submit the required anticipated work schedule, the Resident Engineer will issue a Field Order. The Contractor shall submit updated bar chart every month. The revised bar chart shall be made in the same form and detail as the original submittal and shall be accompanied by an explanation of the reasons for the revisions all of which shall be subject to approval by the Engineer."

31. Refer to Page 89, Subsection 2.26.5.;
Change the "Percent Passing" for Siece Size No. 100 from "40-600%" to "40-60%".

Relationships with the community will be polite and helpful

- Inappropriate or foul language will not be tolerated.
- Personal and commercial deliveries will be accommodated.
- Access will always be maintained for mail delivery and the community.
- Construction personnel will be courteous to the public and will refer all questions to the Resident Engineer or Community Construction Liaison.

The community will be kept informed about the project

- An overall project schedule along with detailed information about immediate project activities will be maintained and kept up-to-date, for use by City representatives to keep the community informed of Contractor's operations.
- All 24 Hour Notifications signs prepared by the project staff in order to inform the public of impending work (i.e. water shutdowns, parking interruptions, traffic pattern changes, access restrictions, etc.) shall be posted by the Contractor in the affected geographical area as directed by the Engineer, at least 24 hours before the start of such work.

Construction will proceed in a safe manner

- Temporary walkways will be clearly marked, smooth, drained, and clear of obstacles.
- Access to active fire hydrants will be maintained.
- Equipment and vehicles will be operated at acceptable speeds and in a safe manner.
- Fencing will be maintained in an acceptable condition.
- There will be sufficient traffic control devices and they will be maintained.
- Trucks will not stand idling.
- Steel road plates will be skid-resistant.
- Flaggers will ALWAYS be used when equipment is moved into and out of congested or high-volume traffic areas.
- Temporary asphalt ramps and roadway restorations will be well maintained.

Signature of Principal of Construction Company Date

Name of Construction Company (Print)

2. AMENDMENTS TO STANDARD HIGHWAY SPECIFICATIONS, VOLUME II

[Added 01-25-2012]

1. Refer to Pages 365 and 366, **Subsection 6.40.2.(C)(c)(1) Personal Computer(s) - Workstation Configuration;**
Delete the text under **Subsections (a), (b), (c), (d),** (h), (i), and (m), in their entirety;
Substitute the following revised text:

"(a)	Make and Model:	Dell; HP; Gateway; Acer; or, an approved equivalent. (Note: an approved equivalent requires written approval of the Assistant Commissioner of ITS.)
(b)	Processor:	i5-2400 (6MB Cache, 3.1GHz) or faster computer - Single Processor.
(c)	System Ram:	Minimum of 4GB (Gigabytes) Dual Channel DDR3 SDRAM at 1333MHz – 2 DIMMSs
(d)	Hard Disk Drive(s):	500 GB (Gigabytes) Serial ATA (7200RPM) w/DataBurst Cache, or larger."
"(h)	Video Display Card:	HD Graphics (VGA, HDMI) with a minimum of 64 MB of RAM.
(i)	Monitor:	22" W, 23.0 Inch VIS, Widescreen, VGA/DVI LCD Monitor."
"(m)	Software Requirements:	Microsoft Windows 7 Professional SP1, 64 bit; Microsoft Office Professional 2010; Microsoft Project 2010; Adobe Acrobat reader; Anti-Virus software package with 2 year updates subscription; and, either Auto Cad 2012 LT or Microsoft Visio 2010 Standard Edition, as directed by the Engineer."

2. Refer to Page 366, **Subsection 6.40.2.(C)(c)(2)(b);**
Delete the text under **Subsection (b),** which begins with the words "(b) One (1) 600 DPI HP Laser Jet . . .", in its entirety;
Substitute the following revised text:

"(b) One (1) 600 DPI HP Color Laser Jet all-in-one Printer/Scanner/Copier/Fax (twelve (12) pages per minute or faster) with one (1) Extra Paper Tray (Legal Size) networked to all office computers."

3. Refer to Page 367, **Subsection 6.40.3. SPECIFIC REQUIREMENTS FOR ENGINEERS FIELD OFFICE (TYPE A, B, C, CU, D OR DU)**, first paragraph;
Delete the text in the first paragraph of **Subsection 6.40.3.**, in its entirety;
Substitute the following revised text:

6.40.3. SPECIFIC REQUIREMENTS FOR ENGINEER'S FIELD OFFICE (TYPE A, B, C, CU, D, OR DU). In addition to the general requirements, each type of Field Office shall have the minimum floor area indicated in Table 6.40-I calculated based on usable area only, excluding any loss factors. Loss factors are defined as those areas such as lobby, sidewalk window ledge, elevator shafts and stairways. The Contractor shall provide and maintain furnishings for each type of Field Office in the quantity specified in Table 6.40-I. The furnishings shall be new or used equipment satisfactory to the Engineer:

4. Refer to Page 368, TABLE 6.40-I, ADDITIONAL REQUIREMENTS SPECIFIC REQUIREMENTS;
Delete the requirements for a Photocopy Machine shown in the 15th row of TABLE 6.40-I, in its entirety;
Substitute the following revised requirements:

Photocopying Machine – Stand-alone, heavy duty, electric, dry-process color photocopying type with a minimum production rate of 70 pages per minute and an adequate supply of copy paper, toner, etc. The machine shall be capable of duplex copying paper sizes of 8-1/2 x 11 inches, 8-1/2 x 14 inches and 11 x 17 inches, and have separate trays for each paper size. It shall have a document feeder, collator, stapler, and the capability to reduce/enlarge copies between each paper size. The supply of each size copy paper, toner, etc. shall be replenished and the machines shall be maintained for the duration of the contract by the Contractor as required by the Engineer. Make and model can be Minolta, Canon, IBM, Epson, or an approved equivalent, and shall be networked to the office computers.	1	1	1	1	1	1

5. Refer to Page 368, TABLE 6.40-I, ADDITIONAL REQUIREMENTS SPECIFIC REQUIREMENTS;
Insert the following two additional requirements:

Heavy duty commercial grade diamond cut shredder with automatic start. The shredder shall be able to receive 8-1/2 inch wide paper and shred a minimum of 15 sheets simultaneously along with CDs and staples.	1	1	1	1	1	1
Projector – 1080p LCD with a min. of 2200 ANSI Lumins, 1920 x 1080, 16:9, 40,000:1 contrast ratio, HDMI, VGA, USB, and a 10 feet diagonal, 16:9 Projection Screen.	-	-	1	1	1	1

6. Refer to Page 496, Subsection **7.20.4. METHODS**, last paragraph beginning with the words "When directed by the Engineer, due to the original conditions . . .";
Add the following sentence to the end of the last paragraph under **Subsection 7.20.4:**

"However, if the owner at his own expense supplies the replacement frame and doors or hatch covers the Contractor shall install the replacement frame and doors or hatch covers under this Item 7.20, as a basement access reset, in lieu of the steel safety closure plate."

[Added 07-16-2012]

7. Refer to Page 365, **Subsection 6.40.2.(C)(c)(1) "Personal Computer(s) - Workstation Configuration"**;
Delete the text under **Subsections (g) and (k),** in their entirety;
Substitute the following revised text:

"(g)	I/O Ports:	Must have at least one (1) Serial Port, one (1) Parallel Port, and three (3) USB Ports.
(k)	Network Interface:	Integrated 10/100/1000 Ethernet card."

8. Refer to Page 366, **Subsection 6.40.2.(C)(c)(2) "All field offices requiring computers shall be provided with the following:"**;
Delete the text under **Subsection (a),** in its entirety;
Substitute the following revised text:

"(a) One (1) broad-band internet service account. Wideband Internet connectivity at a minimum throughput of 15 Mbps download and 5 Mbps upload is required at each field office location with 1-5 staffers. For larger field offices see table below for minimum required upload speeds. Telephone service should be bundled together with Internet connectivity. Because of throughput requirements Verizon FIOS is the preferred connectivity provider where available.

Office Personnel #	**Upload Speeds (*Minimum*)**
1 - 5	5 Mbps
6 - 10	10 Mbps
11 - 15	15 Mbps
16 - 20 ...	20 Mbps

This account will be active for the life of the project. The e-mail name for the account shall be the DDC Field Office/project Id (e.g. FLD K HWK666 McGuinness@earthlink.com)."

[Added 08-09-2012]

9. Refer to Page 366, **Subsection 6.40.2.(C)(c)(2)(b)**, as amended by Article 2 on page A1-2 of this Addendum;
   Delete the text under **Subsection (b)**, in its entirety;
   Substitute the following words: "**(b) (No Text)**."

10. Refer to Page 368, TABLE 6.40-I, ADDITIONAL REQUIREMENTS SPECIFIC REQUIREMENTS;
    Delete the requirements for a Photocopy Machine shown in the 15th row of TABLE 6.40-I, as modified by Article 4 on page A1-2a of this Addendum, in its entirety;
    Substitute the following revised requirements:

Photocopying Machine – Stand-alone, heavy duty, electric, dry-process color photocopying type with color scan and send capability via e-mail, a minimum production rate of 70 pages per minute and an adequate supply of copy paper, toner, etc. The machine shall be capable of duplex copying paper sizes of 8-1/2 x 11 inches, 8-1/2 x 14 inches and 11 x 17 inches, and have separate trays for each paper size. It shall have a document feeder, collator, stapler, and the capability to reduce/enlarge copies between each paper size. The supply of each size copy paper, toner, etc. shall be replenished and the machines shall be maintained for the duration of the contract by the Contractor as required by the Engineer. Make and model can be Minolta, Canon, IBM, Epson, or an approved equivalent, and shall be networked to the office computers.	1	1	1	1	1	1

[Added 11-26-2012]

11. Refer to Pages 504 through 508, **SECTION 7.88 – Rodent and Waterbug Pest Control**;
    Delete **Section 7.88,** in its entirety;
    Substitute SECTION 7.88 (Revised), as contained on the following pages A1-2d through A1-2i.

[Added 02-08-2013]

12. (NO TEXT)

SECTION 7.88 (Revised)
Rodent and Waterbug Pest Control

7.88.1. DESCRIPTION. The Contractor shall provide all labor, materials, plant and equipment, and incidentals required to survey and monitor rodent activity and control any infestation or outbreak of rodents and waterbugs (American cockroaches) within the project limit.

7.88.2. MATERIALS. All materials shall be approved by the New York State Department of Environmental Conservation and comply with the New York City Health Code for the intended usage.

Rodenticide weatherproof bait blocks shall be multiple dose anticoagulants such as Chlorophacinone or Dephacinone, or single feed rodenticides such as ContraMeal, ContracBait block, Quintox pellets or TalonG pellets, or an approved equivalent.

Tamper proof bait station boxes shall be designed to exclude other mammals and shall be used with poisoned bait to attract rats. Information on "tamper proof bait station boxes" is available from the NYC Bureau of Regulatory & Environmental Health Services, Pest Control Office (718-956-7103/4).

Live traps shall be of proper dimensions for trapping rats and shall not be used with poisoned bait.

Insecticide bait shall be a residual type such as phenol methyl carbamate (2%) bait or an approved equivalent.

(A) SUBMITTALS

Prior to commencement of construction activities the Contractor shall submit to the Engineer manufacturer's installation instructions for all materials required for rodent and waterbug pest control work and product data which shall include illustrations, catalog data, product characteristics, typical use, performance, and limitation criteria of all rodent and waterbug pest control materials required.

7.88.3. PERSONNEL. The Contractor shall employ two independent licensed exterminators: one to engage in survey and monitoring work to establish the level of infestation of rodents and insects and provide recommendations for specific Integrated Pest Management (IPM) actions, and one to execute the rodent and waterbug pest control work to deal with such infestations. All pest control personnel employed by each exterminator company must be supervised by an exterminator licensed in categories 7A & 8. The Contractor shall submit the names and license credentials of the two exterminator companies to the Engineer for approval prior to the commencement of any work under this section.

7.88.4. METHODS. Application and dosage of all materials shall be done in strict compliance with the manufacturer's recommendations. All surveying, monitoring, baiting, and/or live trapping work shall be performed in the presence of the Engineer, without which no payment will be made under this Section.

(A) GENERAL

The Contractor's construction activity is expected to disturb any established rodent and/or waterbug population that may exist within the project limits, possibly causing their dispersion. The Contractor shall take all appropriate action to eliminate and/or control these populations within the construction corridor: the construction corridor shall be defined as being the full width of streets under the contract and intersecting streets up to the limits of construction, from property line to property line, excluding buildings and under sidewalk building vaults.

Under the Maintenance of Site requirements for the contract, any unsanitary conditions, such as uncollected garbage or debris, resulting from the Contractor's activities which will provide food and shelter to the resident rodent population shall be corrected by the Contractor immediately after notification of such condition by the Engineer. Non-compliance shall be subject to the application of the "Nonconformance" provisions of the Item for Maintenance of Site, and no payment will be made for any additional application of rodenticide or insecticide needed to control resultant infestations.

(B) SURVEY AND MONITORING WORK

(1) Prior to Construction - The Contractor's designated survey and monitoring exterminator shall execute a survey of the project area and estimate the level of rodent (Norway rat, House mouse) infestation and the waterbug population within the construction corridor. An appropriate sample of utility manholes (sewer, electrical, telephone, etc.) and catch basins should be opened and surveyed to the satisfaction of the Engineer. Contractor shall maintain all survey records in the manner described in 7.88.6., Records and Reports.

(2) During Construction - The Contractor shall monitor the rodent activity through trapping (snap, glue traps or live traps), fecal count methods, and inspection of the conditions of all installed baits every week during construction activity or as otherwise directed by the Engineer. Contractor shall maintain all monitoring records in the manner described in 7.88.6., Records and Reports.

(C) RODENT CONTROL WORK

(1) Wetlands, Woodlands and Areas Within Seventy-five (75') feet of a Stream. In wetlands, woodlands and areas adjacent to a stream, special precautions must be taken to protect water quality and to ensure the safety of other wildlife. To prevent poisoned bait from entering streams, no poisoned bait shall be used in areas within seventy-five (75') feet of either streambank. Live traps must be used in these seventy-five (75') feet buffer zone areas and within wetland and woodland areas.

(2) Outside Wetland Areas, Woodland Areas and Beyond Seventy-five (75') feet of a Stream. In areas outside the seventy-five foot zone of protection adjacent to streams, and areas outside wetlands and woodlands, tamper proof bait stations with poisoned bait shall be established during the period of construction and any consumed or decomposed bait shall be replenished as directed.

Rodent control shall be achieved in two stages as follows:

Stage I. At least one month prior to initiation of the construction work, and periodically thereafter, live traps and/or rodenticide bait, as directed above, shall be placed at locations [e.g., burrows, utility manholes (sewer, electrical, phone, etc.), and catch basins] that are inaccessible to pets, human beings, children and other non-target species, particularly wildlife (e.g., birds) in the construction corridor. Locations of initial bait placement and quantities of bait shall be determined by the survey and monitoring exterminator's written report of his survey and monitoring results, or as otherwise directed by the Engineer.

Stage II. During Construction - Infested sites as determined by the survey and monitoring exterminator's monitoring report shall be baited and/or rebaited, and live traps shall be collected and replaced, the rates and quantities of which shall be determined by the written monitoring reports submitted weekly or as otherwise directed by the Engineer in consultation with the City's Office of Pest Control.

The baiting exterminator shall be responsible for collecting and disposing of all trapped and poisoned rodents found in live traps and tamper proof bait stations. The baiting exterminator shall also be responsible for posting and maintaining signs announcing the baiting of each particular location.

The Contractor, under his maintenance of site operations, shall be responsible for the immediate collection and disposal of any visible rodent remains found on streets or sidewalk within the project limits. Any visible remains shall be placed into double plastic bags. No more than five (5) carcasses shall be placed into each bag. Each bag shall be a minimum of 3 mils thick, black plastic. No additional payment will be made for this work.

It is anticipated that public complaints will be addressed to the Engineer's Field Office. The Contractor, where directed by the Engineer, shall take appropriate Integrated Pest Management (IPM) actions, such as baiting, trapping, proofing, etc., to remedy the source of a complaint within the next six (6) hours of normal working time, which is defined herein, for the purposes of this section, as 7 A.M. to 6 P.M. on Mondays through Saturdays.

(D) WATERBUG (AMERICAN COCKROACH) CONTROL

Infested sites (e.g., sewers) shall be baited at least 2 times per month with insecticides, or as directed by the Engineer in consultation with the exterminator monitoring the work and the City's Office of Pest Control.

7.88.5. EDUCATION & TRAINING. The Contractor shall post notices in all Construction Bulletin Boards advising workers, employees, and residents to call the Engineer's Field Office to report rodent and waterbug infestations. The Contractor shall provide and distribute literature pertaining to IPM techniques of rodent control to affected businesses and superintendents of nearby residential buildings to ensure their participation in maintaining their establishments free of unsanitary conditions, harborage removal and rodent proofing.

Prior to application of any chemicals, the Contractor shall furnish copies or sample labels for each pesticide, antidote information, and Material Data Safety Sheets (MSDS) for each chemical used.

7.88.6. RECORDS AND REPORTS.

(A) GENERAL

The Contractor shall be responsible for assigning within the construction corridor an identifying number to each manhole, catch basin, and other location where bait and/or live trap placement and/or waterbug control work is proposed by the survey and monitoring exterminator. The Contractor shall then provide that list of locations and corresponding reference numbers along with a drawing showing the locations, as a reference for the exterminator(s) performing the work, to indicate locations of bait placement and waterbug control work and rodent and waterbug activity (droppings, bait consumed, dead rodents, etc.).

(B) SURVEY AND MONITORING WORK

(1) Prior to Construction – Contractor shall submit to the Engineer, for approval, a written survey report including proposed IPM procedures, including specific materials, quantities, locations, methods, and time schedule for the implementation of the exterminating work. The written report shall also include a survey with a drawing (provided by the Contractor) marked with locations indicating all signs of rodent (Norway rat, House mouse) infestation and waterbug activity discovered during the execution of the survey indicating that rodent and waterbug pest control work is necessary.

(2) During Construction - Based on monitoring results, Contractor shall submit to the Engineer a weekly written monitoring report identifying all locations and conditions of installed bait and/or other rodent control work. The monitoring report shall also include any other recommended IPM techniques, such as baiting, trapping, proofing, etc., proposed for rodent and waterbug pest control.

The survey and monitoring exterminator shall keep a record of all rodent and waterbug infestation surveys s/he has conducted. The Contractor shall be required to submit a copy of all survey and monitoring reports to the Engineer each week, prior to payment.

(C) RODENT AND WATERBUG CONTROL WORK

The baiting exterminator shall maintain records of all locations baited along with the type and quantity of rodenticide and insecticide bait used. These records will be kept by the City Inspector. A weekly report shall be prepared, signed and certified by the approved licensed exterminator, and such reports shall be submitted to the Engineer each week, prior to payment.

7.88.7. NONCONFORMANCE. If the Contractor fails to perform as directed to control the rodent and/or waterbug population at any location within the project limits for a period of more than one week, the Engineer will correct the adverse conditions by any means he deems appropriate, including but not limited to, the use of "outside services" and shall deduct the cost of the corrective work from any monies due to the Contractor. The deducted cost of this work shall be in addition to the non-payment for rodent and waterbug pest control.

7.88.8. MEASUREMENT.

(A) RODENT INFESTATION SURVEY AND MONITORING

The quantity to be measured for payment under Item No. 7.88 AA, RODENT INFESTATION SURVEY AND MONITORING, shall be a Lump Sum measurement.

(B) RODENT BAIT STATIONS

The quantity to be measured for payment under Item No. 7.88 AB, RODENT BAIT STATIONS, shall be the number of tamper-proof rodent bait station boxes and/or live traps satisfactorily installed or reinstalled after inspection within the construction corridor, as approved by the Engineer. However, the initial baiting, and subsequent rebaiting as may be required, of any bait station will be paid for under Item 7.88 AC.

(C) BAITING OF RODENT BAIT STATIONS

The quantity to be measured for payment under Item No. 7.88 AC, BAITING OF RODENT BAIT STATIONS, shall be the number of tamper-proof rodent bait station boxes, utility manholes, catch basins, or other locations approved by the Engineer, satisfactorily baited or rebaited to replenish consumed or decomposed bait within the construction corridor, as approved by the Engineer.

(D) WATERBUG BAIT APPLICATION

The quantity to be measured for payment under Item No. 7.88 AD, WATERBUG BAIT APPLICATIONS, shall be the number of blocks satisfactorily treated with insecticide bait within the construction corridor, as approved by the Engineer. A block shall be defined as the area of street, measured between property lines, from intersection to intersection. Each rebaiting of any block shall be considered as a new block for measurement purposes.

7.88.9. PRICES TO COVER.

(A) RODENT INFESTATION SURVEY AND MONITORING

Payment will be made at the lump sum price bid for RODENT INFESTATION SURVEY AND MONITORING which shall include the cost of furnishing all the labor, materials, plant, equipment (traps, etc.), insurance, and other incidentals required, including but not limited to providing all required maintenance of traffic equipment, to perform a rodent infestation survey of the project area and then monitor the site each week for rodent activity, all in accordance with the specifications and the directions of the Engineer.

Ten (10%) percent of the lump sum price bid will be paid when the initial survey of the project area has been completed and the written survey report has been submitted to the satisfaction of the Engineer. The remainder will be paid in proportion to the percentage of contract completion.

(B) RODENT BAIT STATIONS

The Contract price bid for RODENT BAIT STATIONS shall be a unit price per each tamper proof bait station box and/ or live trap installed or reinstalled after inspection and shall cover the cost of furnishing all labor, materials, plant, equipment (bait stations, etc.), insurance, and other incidentals, including but not limited to providing all required maintenance of traffic equipment, required to control the rodent population found within the project limits in accordance with the specifications and the directions of the Engineer.

In addition to the payment for Rodent Bait Stations installed or reinstalled under this Item 7.88 AB, the Contractor will also be paid for each baiting or rebaiting, when required, of each bait station, under Item No. 7.88 AC.

(C) BAITING OF RODENT BAIT STATIONS

The Contract price bid for BAITING OF RODENT BAIT STATIONS shall be a unit price per each bait station, utility manhole, catch basin or other location approved by the Engineer satisfactorily baited or rebaited, when required, and shall cover the cost of furnishing all labor, materials, plant, equipment (bait), insurance, and other incidentals, in accordance with the specifications and directions of the Engineer. Installation or resetting of the bait station will be paid for under Item 7.88 AB.

(D) WATERBUG BAIT APPLICATION

The Contract price bid for WATERBUG BAIT APPLICATION shall be a unit price per block treated by the exterminator and shall include the cost of furnishing all the labor, materials, plant, equipment (bait, etc.), insurance, and other incidentals, including but not limited to providing all required maintenance of traffic equipment, necessary to control the waterbug population found within the project limits for the duration of the contract in accordance with the specifications and the directions of the Engineer.

Payment will be made under:

Item No.	Item	Pay Unit
7.88 AA	RODENT INFESTATION SURVEY AND MONITORING	L.S.
7.88 AB	RODENT BAIT STATIONS	EACH
7.88 AC	BAITING OF RODENT BAIT STATIONS	EACH
7.88 AD	WATERBUG BAIT APPLICATION	BLOCK

[Added 05-24-2013]

13. Refer to Page 366, **Subsection 6.40.2.(C)(c)(1)(m) Software Requirements**, as modified by Article 1 on page A1-2;
Delete the text under **Subsection (m)**, in its entirety;
Substitute the following revised text:

"(m) Software Requirements: Microsoft Windows 7 Professional SP1, 32 bit; Microsoft Office Professional 2010; Microsoft Project 2010; Adobe Acrobat reader; Anti-Virus software package with 2 year updates subscription; and, either Auto Cad LT or Microsoft Visio Standard Edition, as directed by the Engineer."

[Added 09-04-2013]

14. Refer to Page 384, the end of **Section 6.44 - White and Yellow Thermoplastic Reflectorized Pavement Markings**;
Insert new **SECTION 6.44 PO,** after **Section 6.44**, as contained on the following pages A1-2k through A1-2m.

[Added 02-10-2014]

15. Refer to Pages 393 and 394, **SECTION 6.52 - Uniformed Full-Time Flagperson**;
Delete **Section** 6.52 on pages 393 and 394, but do not delete examples on pages 395 and 396;
Substitute SECTION 6.52 CG, as contained on the following pages A1-2n and A1-2o.

SECTION 6.44 PO
Lane Pavement Overlay

6.44PO.1. DESCRIPTION. This section describes the furnishing and application of an approved Green Asphalt Pavement Color Scheme along designated bicycle lanes and Brick-Red Asphalt Pavement Color Scheme matching Quest's StreetBondCL Terracotta color along designated Select Bus Service (SBS) lanes, as indicated in the Contract Drawings or as directed by the Engineer.

6.44PO.2. REFERENCES.

A. ASTM D-4541 Standard Test Method for Pull-Off Strength of Coatings Using Portable Adhesion Tester.
B. ASTM D-4060 Test Method for Abrasion Resistance of Organic Coatings by the Taber Abrasion.
C. ASTM D-522-93A Standard Test Method for Mandrel Bend Test of Attached Organic Coatings.
D. ASTM G-155 QUV Accelerated Weathering Environment. Standard Practice for Operating Fluorescent Light Apparatus for UV Exposure of Nonmetallic Materials.
E. ASTM D-2486 MEK rub test for chemical resistance.
F. ASTM D-570 Standard Test Method for water absorption of plastics.
G. ASTM E-303 British Pendulum test for friction.
H. EPA 24 ASTM D3960-05 Volatile Organic Compounds.

6.44PO.3. SUBMITTALS.

A. A copy of the current year accreditation certificate available from the Contractor or subcontractor who will be performing this work, or written verification from the coating supplier that the Contractor or subcontractor is qualified to perform this Work.
B. Written and published specification for the application of the selected asphalt pavement coating.
C. Confirmation of coating color.
D. Proof of coating performance through a Certificate of Analysis or equivalent document as provided by the Contractor or the coating supplier.

6.44PO.4. MATERIALS.

The following table outlines minimum performance properties of a typical asphalt pavement coating.

Characteristic	Test Specification	Measured result
Durability: Taber Abrasion resistance	ASTM D-4060 7 day cure, H-10 wheel (wet test)	< 5.0 g/1000
Water sensitivity	ASTM D-570 Water absorption after 9 days: Remaining absorption after 1 hour of recovery:	 < 10% < 1.0%
Color stability	ASTM G-155 QUV 2,000 hours (CIE units)	New York City Bike Lane Green $\Delta E < 1.5$
Color stability	ASTM G-155 QUV 2,000 hours (CIE units)	Brick color $\Delta E < 1.5$

Flexibility: Mandrel Bend	ASTM D-522-93A Flexibility as measured by Mandrel bend 0.5mm thick sample passes 10 mm at 21˚C 0.5mm thick sample passes 125mm at -18˚C	
Chemical resistance	ASTM D-2486 Modified MEK scrubs 16 dry mils, number of scrubs until 50% substrate exposed	>5000
Adhesion to Asphalt	ASTM D-4541	Substrate Failure
Friction Wet	ASTM E-303 British Pendulum Tester	>55
Environmental Sensitivity	EPA 24 ASTM D-3960-05 Volatile Organic Compounds	VOC < 150

These properties shall be evidenced by Certificates of Analysis produced by an independent qualified testing facility.

Green Bicycle and Red Bus Lane Pavement Overlays furnished by the following manufacturers, or approved equivalent, are acceptable for use in this contract:

Ennis Paint, Inc.
1509 S. Kaufman Street
Ennis, TX 75119

Integrated Pavement Concepts, Inc.
102-17957 55th Avenue
Surrey, BC Canada V3S 6C4

Crafco, Inc.
420 N. Roosevelt Avenue
Chandler, AZ 85226

6.44PO.5. METHODS. The asphalt pavement coating system shall be applied to the pavement in accordance with the manufacturer's specification. In its hardened state the color shall be as specified, and as approved by the Engineer. The material shall present a marking whose color and chemical resistance will not degrade under normal exposure to calcium chloride, sodium chloride or automotive oils and fuels. Color pigments used shall remain stable under exposure to ultra violet light. A minimum of four (4) layers of coating material shall be applied to the pavement surface.

The Contractor shall be required to use the proper equipment in the application of the asphalt pavement coating, as per the recommendation of the coating supplier, and as approved by the Engineer.

Asphalt pavement must be stable, well compacted and generally in excellent condition for the application of the asphalt pavement coating to be successful. The Engineer shall make the final determination as to the suitability of the existing asphalt pavement.

The asphalt pavement surface shall be dry and free from all foreign matter, including but not limited to dirt, dust, de-icing materials, and chemical residue.

The asphalt pavement coating shall only be applied in the correct environmental conditions as instructed by the coating supplier, and as approved by the Engineer.

Refer to the instructions provided by the coating supplier regarding when the painted lane may be opened to traffic. Wait time is typically a function of the dry rate of the coating, and climate conditions.

The Engineer may, at his discretion, require the Contractor to remove all extraneous marks on the pavement made by the agents or employees of the Contractor, or made by others due to improper control or protection of the work area by the Contractor, his agents or employees. Any installation which, in the opinion of the Engineer, is not acceptable, whether by reason of poor workmanship, poor appearance, poor performance, poor materials, improper width or improper alignment, shall be reworked by the Contractor at no cost to the City. The Contractor shall replace rejected installation as directed by the Engineer, within fifteen (15) days after receiving written notification of the rejection of such completed work.

6.44PO.6. MEASUREMENT. The quantities to be measured for payment shall be the number of square yards of Lane Pavement Overlay, of each color, placed as specified to the satisfaction of the Engineer.

6.44PO.7. PRICES TO COVER. The unit prices bid per square yard of Green Bicycle Lane Pavement Overlay and Red Bus Lane Pavement Overlay shall cover the cost of all labor, materials, plant, equipment, insurance, and necessary incidentals required including, but not limited to, testing, cleaning, preparation of surfaces, and application of the lane pavement overlay materials, all in accordance with the contract plans and specifications, and as directed by the Engineer.

Payment will be made under:

Item No.	Item	Pay Unit
6.44 POG	GREEN BICYCLE LANE PAVEMENT OVERLAY	S.Y.
6.44 POR	RED BUS LANE PAVEMENT OVERLAY	S.Y.

SECTION 6.52 CG
Crossing Guard

6.52CG.1. INTENT. This section describes the employment of full-time uniformed crossing guards to direct and detour traffic.

6.52CG.2. DESCRIPTION. The Contractor shall furnish an adequate number of competent crossing guards to control vehicular and pedestrian traffic when it is necessary to maintain alternating one-way traffic in one lane of a two-way roadway, and at all other locations where construction operations, construction vehicles and equipment, and temporary traffic patterns related to the construction operations require positive temporary traffic control for safe, efficient traffic operations.

6.52CG.3. METHODS. All crossing guards, whether paid for under this item or not, shall be proficient in speaking, writing and reading English and adequately trained, as approved by the Engineer, in controlling vehicular and pedestrian traffic at construction sites.

All crossing guards, whether paid for under this item or not, their apparel, hand-signaling devices, and active two-way radios shall be appropriate for use at roadway construction sites as approved by the Engineer.

Prior to the start of crossing guard operations, the Contractor shall provide to the Engineer a list of crossing guards to be used in the contract, identifying the source of crossing guard training for each individual. When requested by the Engineer, crossing guards shall demonstrate their competency in crossing guard procedures. Crossing guards not competent in controlling vehicular and pedestrian traffic procedures to the satisfaction of the Engineer shall be retrained or replaced at once. Each crossing guard paid under this item must be a full-time crossing guard. If any worker performing services under this item is also assigned the task of directing construction equipment (as per attached Example #2, worker acting as a flagperson 'A') or any laborer tasks, then such worker shall be deemed to be subject to the provisions of Labor Law §220 Prevailing Wage Schedule and will not be paid for under this Item.

6.52CG.4. MEASUREMENT. The quantity to be measured for payment shall be the number of person-hours of uniformed crossing guard service actually performed, as authorized by the Engineer. Laborers who are not full-time crossing guard will not be measured for payment as crossing guards under this or any other item. Each uniformed crossing guard shall be required to work a minimum of eight (8) hours a day and the Contractor will be given a minimum of twelve (12) hours advanced notice by the Engineer as to when to furnish a crossing guard.

6.52CG.5. PRICE TO COVER. The contract price per person-hour shall cover the cost of all labor, materials, equipment, and insurance necessary to employ a uniformed full-time crossing guard, and equip him/her with safety vests, hard hats, and signaling devices, including all other incidental costs necessary to control and detour traffic, as shown on the Contract Drawings, the Examples #1 and #2 on pages 395 and 396 (excluding worker acting as a flagperson "A" in Example #2), or as directed by the Engineer.

Payment for flagperson "A" in Example #2, shall be deemed to be included under other items of work, as appropriate.

Where there is no scheduled item for Crossing Guard, the cost of furnishing Crossing Guards as required shall be deemed included in the unit price bid for the Maintenance and Protection of Traffic item.

Payment will be made under:

Item No.	Item	Pay Unit
6.52 CG	CROSSING GUARD	PERSON-HOUR (P/HR)

[Added 02-24-2014]

16. Refer to Pages 480 and 481, **Subsection 7.13.2.(B) MAINTENANCE OF STREETS**, 4th paragraph, beginning with the words "The Contractor shall maintain the traveled way . . .;
Delete the 4th paragraph, in its entirety;
Substitute the following text:

"The Contractor shall maintain the traveled way in such a condition and conduct operations in such a manner that snow and ice may be readily removed by others as and when necessary, and in such a manner that proper drainage is provided for the melting of snow in the banks resulting from normal plowing. However, the Contractor will not be responsible for snow or ice removal on the pavement or traveled way opened for public usage, except within the limits of the work zone(s) which may include, but is not be limited to, stairways, promenades, esplanade areas, and sidewalk, including those fronting his office and the Engineer's field office all of which will be the responsibility of the Contractor."

[Added 04-15-2015]

17. Refer to Page A1-2n of this Addendum, **Subsection 6.52CG.5. PRICE TO COVER;**
Add the following text as the second paragraph under **Subsection 6.52CG.5.:**

"The Contractor is advised that until the Comptroller of the City of New York sets a prevailing wage rate for crossing guards, there are no prevailing wage rates for crossing guards."

18. Refer to Pages 328 through 341, **Subsections 6.23.5. MEASUREMENT** and **6.23.6. PRICES TO COVER;**
Delete **Subsection 6.23.5. MEASUREMENT** and **6.23.6. PRICES TO COVER**, in their entirety;
Substitute **Subsection 6.23.5. MEASUREMENT (Revised)** and **6.23.6. PRICES TO COVER (Revised)**, as contained on the following pages A1-2q through A1-2af

19. Refer to Page 511, **SECTIONS 7.97 THRU 8.01 (NO TEXT)**;
Change the words "**SECTIONS 7.97 THRU 8.01 (NO TEXT)**" to read "**SECTIONS 7.97 THRU 7.99 (NO TEXT)**";
Insert new Section 8.00 MT, as contained on the following pages A1-2ag Through A1-2ai;
Insert the words "**SECTION 8.01 (NO TEXT)**".

6.23.5. MEASUREMENT (Revised).

(A) The quantities of

ITEM NO. 6.23 AA	FURNISH AND INSTALL FIRE ALARM POST IN ACCORDANCE WITH F.D. STD. DWG. #141
ITEM NO. 6.23 AB	REMOVE EXISTING FIRE ALARM POST
ITEM NO. 6.23 AC	ADJUST FIRE ALARM POST TO NEW GRADE IN ACCORDANCE WITH F.D. STD. DWG. #167
ITEM NO. 6.23 BA	FURNISH AND INSTALL FIRE ALARM POST AND SUBBASE IN ACCORDANCE WITH F.D. STD. DWG. #141

to be measured for payment shall be the number of fire alarm posts with or without subbases, as specified, incorporated in the work as shown, specified or required, to the satisfaction of the Engineer; the number of fire alarm posts and/or empty housings actually delivered to the Fire Department's storehouse as shown, specified or required, to the satisfaction of the Engineer; or, the number of fire alarm posts adjusted to the new grade as shown, specified or required, to the satisfaction of the Engineer.

(B) The quantities of

ITEM NO. 6.23 AF	FURNISH AND INSTALL FIRE DEPARTMENT POLE TERMINAL (CHIPPY) BOX IN ACCORDANCE WITH FIRE DEPARTMENT STANDARD DRAWING #145AA
ITEM NO. 6.23 AFA	FURNISH AND INSTALL FIRE DEPARTMENT POLE TERMINAL (CHIPPY) BOX IN ACCORDANCE WITH FIRE DEPARTMENT STANDARD DRAWING #145AA WITHOUT TERMINATING CABLES
ITEM NO. 6.23 BF	FURNISH AND INSTALL FIRE DEPARTMENT POLE TERMINAL (HOFFMAN) BOX IN ACCORDANCE WITH FIRE DEPARTMENT STANDARD DRAWING #146
ITEM NO. 6.23 BFE	FURNISH AND INSTALL FIRE DEPARTMENT POLE TERMINAL (HOFFMAN) BOX IN ACCORDANCE WITH FIRE DEPARTMENT STANDARD DRAWING #146 WITHOUT TERMINATING CABLES

to be measured for payment shall be the number of pole terminal boxes of each type, incorporated in the work, complete, as shown, specified or required, to the satisfaction of the Engineer.

(C) The quantities of

ITEM NO. 6.23 BBS	FURNISH AND INSTALL 3" 90 DEGREE P.V.C. WIDE BEND, SCHEDULE 40, U.L. 651 (WITHOUT PAVEMENT EXCAVATION) IN ACCORDANCE WITH F.D. STD. DWG. #141
ITEM NO. 6.23 BBSE	FURNISH AND INSTALL 3" 90 DEGREE P.V.C. WIDE BEND, SCHEDULE 40, U.L. 651 (WITH PAVEMENT EXCAVATION) IN ACCORDANCE WITH F.D. STD. DWG. #141
ITEM NO. 6.23 BH	FURNISH AND INSTALL 4" 90 DEGREE P.V.C. WIDE BEND, SCHEDULE 40, U.L. 651 (WITHOUT PAVEMENT EXCAVATION) IN ACCORDANCE WITH F.D. STD. DWG. #141 OR #145AA
ITEM NO. 6.23 BHE	FURNISH AND INSTALL 4" 90 DEGREE P.V.C. WIDE BEND, SCHEDULE 40, U.L. 651 (WITH PAVEMENT EXCAVATION) IN ACCORDANCE WITH F.D. STD. DWG. #141 OR #145AA
ITEM NO. 6.23 CB	FURNISH AND INSTALL 2 – 3" 90 DEGREE P.V.C. WIDE BENDS, SCHEDULE 40, U.L. 651 IN ONE TRENCH (WITHOUT PAVEMENT EXCAVATION) IN ACCORDANCE WITH F.D. STD. DWG. #141
ITEM NO. 6.23 CBE	FURNISH AND INSTALL 2 – 3" 90 DEGREE P.V.C. WIDE BENDS, SCHEDULE 40, U.L. 651 IN ONE TRENCH (WITH PAVEMENT EXCAVATION) IN ACCORDANCE WITH F.D. STD. DWG. #141

ITEM NO. 6.23 XBB	FURNISH AND INSTALL 2" GALVANIZED STEEL 90 DEGREE BEND (WITHOUT PAVEMENT EXCAVATION) IN ACCORDANCE WITH F.D. STD. DWG. #145BB
ITEM NO. 6.23 XBBE	FURNISH AND INSTALL 2" GALVANIZED STEEL 90 DEGREE BEND (WITH PAVEMENT EXCAVATION) IN ACCORDANCE WITH F.D. STD. DWG. #145BB
ITEM NO. 6.23 XCC	FURNISH AND INSTALL 3" GALVANIZED STEEL 90-DEGREE BEND (WITHOUT PAVEMENT EXCAVATION)
ITEM NO. 6.23 XCCE	FURNISH AND INSTALL 3" GALVANIZED STEEL 90-DEGREE BEND (WITH PAVEMENT EXCAVATION)
ITEM NO. 6.23 XDD	FURNISH AND INSTALL 4" GALVANIZED STEEL 90-DEGREE BEND (WITHOUT PAVEMENT EXCAVATION)
ITEM NO. 6.23 XDDE	FURNISH AND INSTALL 4" GALVANIZED STEEL 90-DEGREE BEND (WITH PAVEMENT EXCAVATION)

to be measured for payment shall be the number of bends of each type and size of eighteen (18") inch radius for fire alarm posts or poles installed in the work, complete, as shown, specified or required, to the satisfaction of the Engineering.

(D) The quantities of

ITEM NO. 6.23 BCS	FURNISH AND INSTALL 3" P.V.C. CONDUIT, SCHEDULE 40, U.L. 651 (WITHOUT PAVEMENT EXCAVATION)
ITEM NO. 6.23 BCSE	FURNISH AND INSTALL 3" P.V.C. CONDUIT, SCHEDULE 40, U.L. 651 (WITH PAVEMENT EXCAVATION)
ITEM NO. 6.23 BGS	FURNISH AND INSTALL 4" P.V.C. CONDUIT, SCHEDULE 40, U.L. 651 (WITHOUT PAVEMENT EXCAVATION)
ITEM NO. 6.23 BGSE	FURNISH AND INSTALL 4" P.V.C. CONDUIT, SCHEDULE 40, U.L. 651 (WITH PAVEMENT EXCAVATION)
ITEM NO. 6.23 BGT	FURNISH AND INSTALL 2 – 4" P.V.C. CONDUITS, SCHEDULE 40, U.L. 651 IN ONE TRENCH (WITHOUT PAVEMENT EXCAVATION, ONE ON TOP OF THE OTHER)
ITEM NO. 6.23 BGTE	FURNISH AND INSTALL 2 – 4" P.V.C. CONDUITS, SCHEDULE 40, U.L. 651 IN ONE TRENCH (WITH PAVEMENT EXCAVATION, ONE ON TOP OF THE OTHER)
ITEM NO. 6.23 CC	FURNISH AND INSTALL 2 – 3" P.V.C. CONDUITS, SCHEDULE 40, U.L. 651 IN ONE TRENCH (WITHOUT PAVEMENT EXCAVATION, ONE ON TOP OF THE OTHER)
ITEM NO. 6.23 CCE	FURNISH AND INSTALL 2 – 3" P.V.C. CONDUITS, SCHEDULE 40, U.L. 651 IN ONE TRENCH (WITH PAVEMENT EXCAVATION, ONE ON TOP OF THE OTHER)
ITEM NO. 6.23 XB	FURNISH AND INSTALL 2" STEEL GALVANIZED CONDUIT (WITHOUT PAVEMENT EXCAVATION)
ITEM NO. 6.23 XBE	FURNISH AND INSTALL 2" STEEL GALVANIZED CONDUIT (WITH PAVEMENT EXCAVATION)
ITEM NO. 6.23 XC	FURNISH AND INSTALL 3" GALVANIZED STEEL CONDUIT (WITHOUT PAVEMENT EXCAVATION)
ITEM NO. 6.23 XCE	FURNISH AND INSTALL 3" GALVANIZED STEEL CONDUIT (WITH PAVEMENT EXCAVATION)
ITEM NO. 6.23 XD	FURNISH AND INSTALL 4" GALVANIZED STEEL CONDUIT (WITHOUT PAVEMENT EXCAVATION)
ITEM NO. 6.23 XDE	FURNISH AND INSTALL 4" GALVANIZED STEEL CONDUIT (WITH PAVEMENT EXCAVATION)

to be measured for payment shall be the number of linear feet of each size, number and kind of fire communication conduit and forty-eight (48") radius bends incorporated in the work, complete, as shown, specified or required, to the satisfaction of the Engineer, measured along the center line of each run of fire communication conduit, from center line of manhole to center line of manhole or to center line of fire alarm post or pole, as is applicable.

(E) The quantities of

ITEM NO. 6.23 BD	FURNISH AND INSTALL 4-PAIR FIRE ALARM CABLE
ITEM NO. 6.23 DC	FURNISH AND INSTALL 10 PAIR FIRE ALARM CABLE
ITEM NO. 6.23 DDA	FURNISH AND INSTALL 15 PAIR FIRE ALARM CABLE
ITEM NO. 6.23 DDB	FURNISH AND INSTALL 20 PAIR FIRE ALARM CABLE
ITEM NO. 6.23 DDC	FURNISH AND INSTALL 25 PAIR FIRE ALARM CABLE
ITEM NO. 6.23 DDD	FURNISH AND INSTALL 30 PAIR FIRE ALARM CABLE
ITEM NO. 6.23 DDE	FURNISH AND INSTALL 40 PAIR FIRE ALARM CABLE
ITEM NO. 6.23 DF	FURNISH AND INSTALL 45 PAIR FIRE ALARM CABLE
ITEM NO. 6.23 DG	FURNISH AND INSTALL 50 PAIR FIRE ALARM CABLE
ITEM NO. 6.23 DH	FURNISH AND INSTALL 55 PAIR FIRE ALARM CABLE
ITEM NO. 6.23 DJ	FURNISH AND INSTALL 60 PAIR FIRE ALARM CABLE

to be measured for payment shall be the number of linear feet of each size and type of fire alarm cable, including slack, incorporated in the work, complete, as shown, specified or required, to the satisfaction of the Engineer, measured along the centerline of each run of fire alarm cable, continuously through manholes.

(F) The quantities of

ITEM NO. 6.23 BE	FURNISH AND INSTALL FIRE DEPARTMENT MANHOLE TYPE "A" WITH FRAME AND COVER IN ACCORDANCE WITH F.D. STD. DWG. #140, #144, & #144E
ITEM NO. 6.23 BES	FURNISH AND INSTALL FIRE DEPARTMENT SLOTTED MANHOLE TYPE "A" WITH FRAME AND COVER IN ACCORDANCE WITH F.D. STD. DWG. #140, #144S & #144E
ITEM NO. 6.23 EB	FURNISH AND INSTALL FIRE DEPARTMENT MANHOLE TYPE "B" WITH FRAME & COVER IN ACCORDANCE WITH F.D. STD. DWG. #140, #144, #144C, #144CC, & #144E
ITEM NO. 6.23 HH	FURNISH AND INSTALL F.D.N.Y. SIDEWALK HANDHOLE WITH FRAME AND COVER IN ACCORDANCE WITH F.D. STD. DWG. #144B OR #144E
ITEM NO. 6.23 HHA	FURNISH AND INSTALL F.D.N.Y. SIDEWALK HANDHOLE WITH FRAME AND COVER IN ACCORDANCE WITH F.D. STD. DWG. #143
ITEM NO. 6.23 HHS	FURNISH AND INSTALL F.D.N.Y. SIDEWALK SLOTTED HANDHOLE WITH FRAME AND COVER IN ACCORDANCE WITH F.D. STD. DWG. #144E OR #144BS

to be measured for payment shall be the number of each type manhole or handhole installed in the work, complete, as shown, specified or required, to the satisfaction of the Engineer.

(G) The quantities of

ITEM NO. 6.23 BFA	FURNISH AND INSTALL FIRE DEPARTMENT 48 WIRE TERMINAL BOX AND TERMINATE FIRE ALARM CABLES
ITEM NO. 6.23 BFB	FURNISH AND INSTALL FIRE DEPARTMENT 24 WIRE TERMINAL BOX AND TERMINATE FIRE ALARM CABLES
ITEM NO. 6.23 BFC	FURNISH AND INSTALL FIRE DEPARTMENT 12 WIRE TERMINAL BOX AND TERMINATE FIRE ALARM CABLES

to be measured for payment shall be the number of terminal boxes of each type, incorporated in the work, complete, as shown, specified or required, to the satisfaction of the Engineer.

(H) The quantity of

ITEM NO. 6.23 BGB	FURNISH AND INSTALL 4" PVC CONDUIT TO 4" GALVANIZED STEEL BUSHING AS SHOWN IN F.D. STD. DWG. #145AA OR 146

ITEM NO. 6.23 BGD	FURNISH AND INSTALL 3" PVC CONDUIT TO 3" GALVANIZED STEEL BUSHING AS SHOWN IN F.D. STD. DWG. #145AA OR 146
ITEM NO. 6.23 BGR	FURNISH AND INSTALL 4" PVC CONDUIT TO 2" GALVANIZED STEEL REDUCER BUSHING AS SHOWN IN F.D. STD. DWG. #145AA
ITEM NO. 6.23 BGRA	FURNISH AND INSTALL 4" PVC CONDUIT TO 3" GALVANIZED STEEL REDUCER BUSHING AS SHOWN IN F.D. STD. DWG. #145AA OR 146
ITEM NO. 6.23 BGRC	FURNISH AND INSTALL 3" PVC CONDUIT TO 2" GALVANIZED STEEL REDUCER BUSHING AS SHOWN IN F.D. STD. DWG. #145AA OR 146
ITEM NO. 6.23 BGRE	FURNISH AND INSTALL 3" PVC CONDUIT TO 4" GALVANIZED STEEL REDUCER BUSHING AS SHOWN IN F.D. STD. DWG. #145AA OR 146

to be measured for payment shall be the number of bushings incorporated in the work, complete, as shown, specified or required, to the satisfication of the Engineer.

(I) The quantity of

ITEM NO. 6.23 BP	FURNISH AND INSTALL FIRE ALARM PEDESTAL BUMPERS (2 REQUIRED PER SET) IN ACCORDANCE WITH F.D. STD. DWG. #168

to be measured for payment shall be the number of sets of bumpers, incorporated in the work, complete, as shown, specified or required, to the satisfaction of the Engineer. Each set shall consist of two (2) bumpers.

(J) The quantities of

ITEM NO. 6.23 FC	REMOVE EXISTING F.D.N.Y. MANHOLE FRAME & COVER AND FURNISH AND INSTALL F.D.N.Y. FRAME & COVER IN ACCORDANCE WITH F.D. STD. DWG. #140
ITEM NO. 6.23 HFC	REMOVE EXISTING F.D.N.Y. SIDEWALK HANDHOLE FRAME & COVER AND FURNISH AND INSTALL F.D.N.Y. SIDEWALK HANDHOLE FRAME & COVER IN ACCORDANCE WITH F.D. STD. DWG. #143 OR #144B

to be measured for payment shall be the number of each type of existing F.D.N.Y. manhole frame & cover or sidewalk handhole frame & cover that have been replaced, at the locations shown or as directed and as shown on the Fire Department Standards, to the satisfaction of the Engineer.

(K) The quantities of

ITEM NO. 6.23 FCA	FURNISH AND INSTALL F.D.N.Y. MANHOLE FRAME & COVER IN ACCORDANCE WITH F.D. STD. DWG. #140
ITEM NO. 6.23 FCB	FURNISH AND INSTALL F.D.N.Y. MANHOLE COVER IN ACCORDANCE WITH F.D. STD. DWG. #140
ITEM NO. 6.23 HC	FURNISH AND INSTALL F.D.N.Y. SIDEWALK HANDHOLE COVER IN ACCORDANCE WITH F.D. STD. DWG. #143 OR #144B
ITEM NO. 6.23 HFCA	FURNISH AND INSTALL F.D.N.Y. SIDEWALK HANDHOLE FRAME AND COVER IN ACCORDANCE WITH F.D. STD. DWG. #143 OR #144B

to be measured for payment shall be the number of new manhole or sidewalk handhole frames with covers or manhole or sidewalk handhole covers incorporated in the work, complete, as shown, specified or required, to the satisfaction of the Engineer.

(L) The quantities of

ITEM NO. 6.23 RH	REMOVE EXISTING F.D.N.Y. SIDEWALK HANDHOLE
ITEM NO. 6.23 RM	REMOVE EXISTING F.D.N.Y. MANHOLE

to be measured for payment shall be the number of F.D.N.Y. manholes or sidewalk handholes actually removed, as specified, at the location shown or as directed, to the satisfaction of the Engineer.

(M) The quantities of

ITEM NO. 6.23 RIC	RODDING AND INSTALLING FIRE ALARM CABLE IN EXISTING TELEPHONE CONDUIT SYSTEM
ITEM NO. 6.23 RICA	ROD AND ROPE CONDUIT AND INSTALL 4 PAIR FIRE ALARM CABLE IN EXISTING VERIZON OR FIRE DEPARTMENT CONDUIT SYSTEM
ITEM NO. 6.23 RICB	ROD AND ROPE CONDUIT AND INSTALL 10 PAIR FIRE ALARM CABLE IN EXISTING VERIZON OR FIRE DEPARTMENT CONDUIT SYSTEM
ITEM NO. 6.23 RICC	ROD AND ROPE CONDUIT AND INSTALL 15 PAIR FIRE ALARM CABLE IN EXISTING VERIZON OR FIRE DEPARTMENT CONDUIT SYSTEM
ITEM NO. 6.23 RICD	ROD AND ROPE CONDUIT AND INSTALL 20 PAIR FIRE ALARM CABLE IN EXISTING VERIZON OR FIRE DEPARTMENT CONDUIT SYSTEM
ITEM NO. 6.23 RICE	ROD AND ROPE CONDUIT AND INSTALL 25 PAIR FIRE ALARM CABLE IN EXISTING VERIZON OR FIRE DEPARTMENT CONDUIT SYSTEM
ITEM NO. 6.23 RICF	ROD AND ROPE CONDUIT AND INSTALL 30 PAIR FIRE ALARM CABLE IN EXISTING VERIZON OR FIRE DEPARTMENT CONDUIT SYSTEM
ITEM NO. 6.23 RICG	ROD AND ROPE CONDUIT AND INSTALL 40 PAIR FIRE ALARM CABLE IN EXISTING VERIZON OR FIRE DEPARTMENT CONDUIT SYSTEM
ITEM NO. 6.23 RICH	ROD AND ROPE CONDUIT AND INSTALL 45 PAIR FIRE ALARM CABLE IN EXISTING VERIZON OR FIRE DEPARTMENT CONDUIT SYSTEM
ITEM NO. 6.23 RICI	ROD AND ROPE CONDUIT AND INSTALL 50 PAIR FIRE ALARM CABLE IN EXISTING VERIZON OR FIRE DEPARTMENT CONDUIT SYSTEM
ITEM NO. 6.23 RICJ	ROD AND ROPE CONDUIT AND INSTALL 55 PAIR FIRE ALARM CABLE IN EXISTING VERIZON OR FIRE DEPARTMENT CONDUIT SYSTEM
ITEM NO. 6.23 RICK	ROD AND ROPE CONDUIT AND INSTALL 60 PAIR FIRE ALARM CABLE IN EXISTING VERIZON OR FIRE DEPARTMENT CONDUIT SYSTEM
ITEM NO. 6.23 RR	ROD AND ROPE EXISTING CONDUIT
ITEM NO. 6.23 XY	FURNISH AND INSTALL POLYPROPYLENE DRAG ROPE

to be measured for payment shall be the number of linear feet of drag rope, with or without rodding, or cable with rodding, including slack, incorporated in the work, complete, as shown, specified or required, to the satisfaction of the Engineer, measured along the center line of each run of drag rope.

(N) The quantities of

ITEM NO. 6.23 XAPE	FURNISH AND INSTALL 1/2" GALVANIZED STEEL CONDUIT POLE RISER IN ACCORDANCE WITH FIRE DEPARTMENT STANDARD DRAWING #145AA
ITEM NO. 6.23 XBPE	FURNISH AND INSTALL 2" GALVANIZED STEEL CONDUIT POLE RISER IN ACCORDANCE WITH FIRE DEPARTMENT STANDARD DRAWING #145AA
ITEM NO. 6.23 XCPE	FURNISH AND INSTALL 3" GALVANIZED STEEL CONDUIT POLE RISER IN ACCORDANCE WITH FIRE DEPARTMENT STANDARD DRAWING #145AA OR #146
ITEM NO. 6.23 XDPE	FURNISH AND INSTALL 4" GALVANIZED STEEL CONDUIT POLE RISER IN ACCORDANCE WITH FIRE DEPARTMENT STANDARD DRAWING #145AA OR #146

to be measured for payment shall be the number of each type of conduit pole riser installed in the work, complete, as shown, specified or required, to the satisfaction of the Engineer.

(O) The quantity of

ITEM NO. 6.23 MW	FURNISH AND INSTALL 5/16 INCH 7 STRAND GALVANIZED STEEL MESSENGER WIRE AND APPURTENANCES

to be measured for payment shall be the number of linear feet of each size and type of steel messenger wire, including slack, incorporated in the work, complete, as shown, specified or required, to the satisfaction of the Engineer, measured along the centerline of each run.

(P) The quantity of

ITEM NO. 6.23 PP PAINT EXISTING FIRE ALARM POST AND/OR HOUSING

to be measured for payment shall be the number of fire alarm posts and/or boxes painted, complete, as specified or required, to the satisfaction of the Engineer.

6.23.6. PRICES TO COVER (Revised). Before payment is made for work done under this Section, the Contractor shall obtain a Certificate of Compliance from the Fire Department and file such certificate with the Engineer. The said certificate shall certify that all work at each location complies with the standards of, and is acceptable to, the Fire Department, Bureau of Communications.

The following contract items shall also include the cost of the permits and the letter of acceptance required and necessary to construct the new Fire Communications System at the locations shown or required all in accordance with the Contract Drawings, Specifications and Standards, and as directed by the Engineer.

(A) The contract prices bid for

ITEM NO. 6.23 AA	FURNISH AND INSTALL FIRE ALARM POST IN ACCORDANCE WITH F.D. STD. DWG. #141
ITEM NO. 6.23 BA	FURNISH AND INSTALL FIRE ALARM POST AND SUBBASE IN ACCORDANCE WITH F.D. STD. DWG. #141
ITEM NO. 6.23 AB	REMOVE EXISTING FIRE ALARM POST
ITEM NO. 6.23 AC	ADJUST FIRE ALARM POST TO NEW GRADE IN ACCORDANCE WITH F.D. STD. DWG. #167

shall be a unit price for each and shall cover the cost of all labor, materials, plant, equipment, insurance, samples, and tests required and necessary to furnish and install fire alarm post with or without subbase, as specified, and at the location shown or as directed and as shown on the Fire Department Standards; or to remove the fire alarm post and/or empty housing at the locations shown and deliver them to the Fire Department's Storehouse as directed; and shall include, but not be limited to, adjustment of base, subbase, and terminal box appurtenances, as may be required, at the locations shown or as directed. Said work shall include, but not be limited to, furnishing and installing base, subbase when specified, and appurtenances; connections; and furnishing and installing all other items necessary to complete this work and do all work incidental thereto, all in accordance with the Contract Drawings, Specifications and Standards, and as directed by the Engineer.

(B) The contract prices bid for

ITEM NO. 6.23 AF	FURNISH AND INSTALL FIRE DEPARTMENT POLE TERMINAL (CHIPPY) BOX IN ACCORDANCE WITH FIRE DEPARTMENT STANDARD DRAWING #145AA
ITEM NO. 6.23 AFA	FURNISH AND INSTALL FIRE DEPARTMENT POLE TERMINAL (CHIPPY) BOX IN ACCORDANCE WITH FIRE DEPARTMENT STANDARD DRAWING #145AA WITHOUT TERMINATING CABLES
ITEM NO. 6.23 BF	FURNISH AND INSTALL FIRE DEPARTMENT POLE TERMINAL (HOFFMAN) BOX IN ACCORDANCE WITH FIRE DEPARTMENT STANDARD DRAWING #146
ITEM NO. 6.23 BFE	FURNISH AND INSTALL FIRE DEPARTMENT POLE TERMINAL (HOFFMAN) BOX IN ACCORDANCE WITH FIRE DEPARTMENT STANDARD DRAWING #146 WITHOUT TERMINATING CABLES

shall be a unit price for each type pole terminal box and shall cover the cost of all labor, materials, plant, equipment, insurance, samples, and tests required and necessary to furnish and install the pole terminal box of the type and at the locations shown or as directed and as shown on the Fire Department Standards. Said work shall also include, but not limited to, connections, cable terminations, and furnishing and installing all other items necessary to complete this work and doing all work incidental thereto, all in accordance with the Contract Drawings, Specifications and Standards, and as directed by the Engineer.

(C) The contract prices bid for

ITEM NO. 6.23 BBS	FURNISH AND INSTALL 3" 90 DEGREE P.V.C. WIDE BEND, SCHEDULE 40, U.L. 651 (WITHOUT PAVEMENT EXCAVATION) IN ACCORDANCE WITH F.D. STD. DWG. #141
ITEM NO. 6.23 BBSE	FURNISH AND INSTALL 3" 90 DEGREE P.V.C. WIDE BEND, SCHEDULE 40, U.L. 651 (WITH PAVEMENT EXCAVATION) IN ACCORDANCE WITH F.D. STD. DWG. #141
ITEM NO. 6.23 BH	FURNISH AND INSTALL 4" 90 DEGREE P.V.C. WIDE BEND, SCHEDULE 40, U.L. 651 (WITHOUT PAVEMENT EXCAVATION) IN ACCORDANCE WITH F.D. STD. DWG. #141 OR #145AA
ITEM NO. 6.23 BHE	FURNISH AND INSTALL 4" 90 DEGREE P.V.C. WIDE BEND, SCHEDULE 40, U.L. 651 (WITH PAVEMENT EXCAVATION) IN ACCORDANCE WITH F.D. STD. DWG. #141 OR #145AA
ITEM NO. 6.23 CB	FURNISH AND INSTALL 2 – 3" 90 DEGREE P.V.C. WIDE BENDS, SCHEDULE 40, U.L. 651 IN ONE TRENCH (WITHOUT PAVEMENT EXCAVATION) IN ACCORDANCE WITH F.D. STD. DWG. #141
ITEM NO. 6.23 CBE	FURNISH AND INSTALL 2 – 3" 90 DEGREE P.V.C. WIDE BENDS, SCHEDULE 40, U.L. 651 IN ONE TRENCH (WITH PAVEMENT EXCAVATION) IN ACCORDANCE WITH F.D. STD. DWG. #141
ITEM NO. 6.23 XBB	FURNISH AND INSTALL 2" GALVANIZED STEEL 90 DEGREE BEND (WITHOUT PAVEMENT EXCAVATION) IN ACCORDANCE WITH F.D. STD. DWG. #145BB
ITEM NO. 6.23 XBBE	FURNISH AND INSTALL 2" GALVANIZED STEEL 90 DEGREE BEND (WITH PAVEMENT EXCAVATION) IN ACCORDANCE WITH F.D. STD. DWG. #145BB
ITEM NO. 6.23 XCC	FURNISH AND INSTALL 3" GALVANIZED STEEL 90-DEGREE BEND (WITHOUT PAVEMENT EXCAVATION)
ITEM NO. 6.23 XCCE	FURNISH AND INSTALL 3" GALVANIZED STEEL 90-DEGREE BEND (WITH PAVEMENT EXCAVATION)
ITEM NO. 6.23 XDD	FURNISH AND INSTALL 4" GALVANIZED STEEL 90-DEGREE BEND (WITHOUT PAVEMENT EXCAVATION)
ITEM NO. 6.23 XDDE	FURNISH AND INSTALL 4" GALVANIZED STEEL 90-DEGREE BEND (WITH PAVEMENT EXCAVATION)

shall be a unit price for each type of conduit bend, single or double, with or without pavement excavation, as specified, and shall cover the cost of all labor, materials, plant, equipment, insurance, samples, and tests required and necessary to furnish and install a two (2") or three (3") or four (4") inch bend, single or double in one trench, of eighteen (18") inch radius for fire alarm posts or poles at the locations shown or as directed and as shown on the Fire Department Standards. Said work shall also include, but not be limited to, excavation and backfilling, connections, and furnishing and installing all other items necessary to complete this work and doing all work incidental thereto, all in accordance with the Contract Drawings, Specifications and Standards, and as directed by the Engineer.

(D) The contract prices bid for

ITEM NO. 6.23 BCS	FURNISH AND INSTALL 3" P.V.C. CONDUIT, SCHEDULE 40, U.L. 651 (WITHOUT PAVEMENT EXCAVATION)
ITEM NO. 6.23 BCSE	FURNISH AND INSTALL 3" P.V.C. CONDUIT, SCHEDULE 40, U.L. 651 (WITH PAVEMENT EXCAVATION)
ITEM NO. 6.23 BGS	FURNISH AND INSTALL 4" P.V.C. CONDUIT, SCHEDULE 40, U.L. 651 (WITHOUT PAVEMENT EXCAVATION)
ITEM NO. 6.23 BGSE	FURNISH AND INSTALL 4" P.V.C. CONDUIT, SCHEDULE 40, U.L. 651 (WITH PAVEMENT EXCAVATION)
ITEM NO. 6.23 BGT	FURNISH AND INSTALL 2 – 4" P.V.C. CONDUITS, SCHEDULE 40, U.L. 651 IN ONE TRENCH (WITHOUT PAVEMENT EXCAVATION, ONE ON TOP OF THE OTHER)
ITEM NO. 6.23 BGTE	FURNISH AND INSTALL 2 – 4" P.V.C. CONDUITS, SCHEDULE 40, U.L. 651 IN ONE TRENCH (WITH PAVEMENT EXCAVATION, ONE ON TOP OF THE OTHER)

ITEM NO. 6.23 CC	FURNISH AND INSTALL 2 – 3" P.V.C. CONDUITS, SCHEDULE 40, U.L. 651 IN ONE TRENCH (WITHOUT PAVEMENT EXCAVATION, ONE ON TOP OF THE OTHER)
ITEM NO. 6.23 CCE	FURNISH AND INSTALL 2 – 3" P.V.C. CONDUITS, SCHEDULE 40, U.L. 651 IN ONE TRENCH (WITH PAVEMENT EXCAVATION, ONE ON TOP OF THE OTHER)
ITEM NO. 6.23 XB	FURNISH AND INSTALL 2" STEEL GALVANIZED CONDUIT (WITHOUT PAVEMENT EXCAVATION)
ITEM NO. 6.23 XBE	FURNISH AND INSTALL 2" STEEL GALVANIZED CONDUIT (WITH PAVEMENT EXCAVATION)
ITEM NO. 6.23 XC	FURNISH AND INSTALL 3" GALVANIZED STEEL CONDUIT (WITHOUT PAVEMENT EXCAVATION)
ITEM NO. 6.23 XCE	FURNISH AND INSTALL 3" GALVANIZED STEEL CONDUIT (WITH PAVEMENT EXCAVATION)
ITEM NO. 6.23 XD	FURNISH AND INSTALL 4" GALVANIZED STEEL CONDUIT (WITHOUT PAVEMENT EXCAVATION)
ITEM NO. 6.23 XDE	FURNISH AND INSTALL 4" GALVANIZED STEEL CONDUIT (WITH PAVEMENT EXCAVATION)

shall be a unit price per linear foot for each size and kind of fire communication conduit and forty-eight (48") inch radius bends, single or double, with or without pavement excavation, as specified, and shall cover the cost of all labor, materials, plant, equipment, insurance, samples, and tests required and necessary to furnish and install the fire communication conduit (single or double in one trench) of the sizes and kind (P.V.C. or Galvanized Steel) specified, to the lines and grades and at the locations shown or as directed, with or without pavement excavation, as specified, of all materials of whatever nature encountered (except excavation of boulders in open cut and ledge rock). Said work shall also include, but not limited to, concrete cradles and encasements as required; all sheeting and bracing; pumping; bridging, decking; removal or abandonment, as required, of parts of the existing Fire Communications System; breaking down and filling in of abandoned fire appurtenances; furnishing and installing select granular fill material for backfill; backfilling; compaction; cleaning up; temporary restoration of street surfaces; installation and removal of temporary fire alarm communication facilities, if required; connections; and furnishing and installing all other items necessary to complete this work and do all work incidental thereto, all in accordance with the Contract Drawings, Specifications and Standards, and as directed by the Engineer.

(E) The contract prices bid for

ITEM NO. 6.23 BD	FURNISH AND INSTALL 4-PAIR FIRE ALARM CABLE
ITEM NO. 6.23 DC	FURNISH AND INSTALL 10 PAIR FIRE ALARM CABLE
ITEM NO. 6.23 DDA	FURNISH AND INSTALL 15 PAIR FIRE ALARM CABLE
ITEM NO. 6.23 DDB	FURNISH AND INSTALL 20 PAIR FIRE ALARM CABLE
ITEM NO. 6.23 DDC	FURNISH AND INSTALL 25 PAIR FIRE ALARM CABLE
ITEM NO. 6.23 DDD	FURNISH AND INSTALL 30 PAIR FIRE ALARM CABLE
ITEM NO. 6.23 DDE	FURNISH AND INSTALL 40 PAIR FIRE ALARM CABLE
ITEM NO. 6.23 DF	FURNISH AND INSTALL 45 PAIR FIRE ALARM CABLE
ITEM NO. 6.23 DG	FURNISH AND INSTALL 50 PAIR FIRE ALARM CABLE
ITEM NO. 6.23 DH	FURNISH AND INSTALL 55 PAIR FIRE ALARM CABLE
ITEM NO. 6.23 DJ	FURNISH AND INSTALL 60 PAIR FIRE ALARM CABLE

shall be a unit price per linear foot for each size and type of fire alarm cable, and shall cover the cost of all labor, materials, plant, equipment, insurance, samples, and tests required and necessary to furnish and install the fire alarm cable of the sizes and at the locations shown or as directed. Said work shall also include, but not be limited to, the cost of splices as required; cutting existing conduit, if required; protection and maintenance of the system for the duration of the guarantee period as required; and furnishing and installing all other items necessary to complete this work and do all work incidental thereto, all in accordance with the Contract Drawings, Specifications and Standards, and as directed by the Engineer.

(F) The contract prices bid for

ITEM NO. 6.23 BE	FURNISH AND INSTALL FIRE DEPARTMENT MANHOLE TYPE "A" WITH FRAME AND COVER IN ACCORDANCE WITH F.D. STD. DWG. #140, #144, & #144E
ITEM NO. 6.23 BES	FURNISH AND INSTALL FIRE DEPARTMENT SLOTTED MANHOLE TYPE "A" WITH FRAME AND COVER IN ACCORDANCE WITH F.D. STD. DWG. #140, #144S & #144E
ITEM NO. 6.23 EB	FURNISH AND INSTALL FIRE DEPARTMENT MANHOLE TYPE "B" WITH FRAME & COVER IN ACCORDANCE WITH F.D. STD. DWG. #140, #144, #144C, #144CC, & #144E
ITEM NO. 6.23 HH	FURNISH AND INSTALL F.D.N.Y. SIDEWALK HANDHOLE WITH FRAME AND COVER IN ACCORDANCE WITH F.D. STD. DWG. #144B OR #144E
ITEM NO. 6.23 HHA	FURNISH AND INSTALL F.D.N.Y. SIDEWALK HANDHOLE WITH FRAME AND COVER IN ACCORDANCE WITH F.D. STD. DWG. #143
ITEM NO. 6.23 HHS	FURNISH AND INSTALL F.D.N.Y. SIDEWALK SLOTTED HANDHOLE WITH FRAME AND COVER IN ACCORDANCE WITH F.D. STD. DWG. #144E OR #144BS

shall be a unit price for each type manhole or sidewalk handhole and shall cover the cost of all labor, materials, plant, equipment, insurance, samples, and tests required and necessary to furnish and install the Fire Department manhole with frame and cover or sidewalk handhole with frame and cover, as specified, at the locations shown or as directed and as shown on the Fire Department Standards. Said work shall also include, but not limited to, excavation of all materials of whatever nature encountered (except excavation of boulders in open cut and ledge rock); reinforcement; all sheeting and bracing; pumping; bridging, decking; removal or abandonment, as required of parts of the existing Fire Communications System; breaking down and filling in of abandoned fire appurtenances; backfill; compaction; cleaning up; temporary restoration of street surfaces; installation and removal of temporary fire alarm communication facilities, if required; connections; and furnishing and installing all other items necessary to complete this work and do all work incidental thereto, all in accordance with the Contract Drawings, Specifications and Standards, and as directed by the Engineer.

(G) The contract prices bid for

ITEM NO. 6.23 BFA	FURNISH AND INSTALL FIRE DEPARTMENT 48 WIRE TERMINAL BOX AND TERMINATE FIRE ALARM CABLES
ITEM NO. 6.23 BFB	FURNISH AND INSTALL FIRE DEPARTMENT 24 WIRE TERMINAL BOX AND TERMINATE FIRE ALARM CABLES
ITEM NO. 6.23 BFC	FURNISH AND INSTALL FIRE DEPARTMENT 12 WIRE TERMINAL BOX AND TERMINATE FIRE ALARM CABLES

shall be a unit price bid for each type cable terminal box and shall cover the cost of all labor, materials, plant, equipment, insurance, samples, and tests required and necessary to furnish and install the cable terminal box of the type and at the locations shown or as directed and as shown on the Fire Department Standards. Said work shall also include, but not be limited to, connections, cable terminations, and furnishing and installing all other items necessary to complete this work and do all work incidental thereto, all in accordance with the Contract Drawings, Specifications and Standards, and as directed by the Engineer.

(H) The contract price bid for

ITEM NO. 6.23 BGB	FURNISH AND INSTALL 4" PVC CONDUIT TO 4" GALVANIZED STEEL BUSHING AS SHOWN IN F.D. STD. DWG. #145AA OR 146
ITEM NO. 6.23 BGD	FURNISH AND INSTALL 3" PVC CONDUIT TO 3" GALVANIZED STEEL BUSHING AS SHOWN IN F.D. STD. DWG. #145AA OR 146
ITEM NO. 6.23 BGR	FURNISH AND INSTALL 4" PVC CONDUIT TO 2" GALVANIZED STEEL REDUCER BUSHING AS SHOWN IN F.D. STD. DWG. #145AA
ITEM NO. 6.23 BGRA	FURNISH AND INSTALL 4" PVC CONDUIT TO 3" GALVANIZED STEEL REDUCER BUSHING AS SHOWN IN F.D. STD. DWG. #145AA OR 146

ITEM NO. 6.23 BGRC	FURNISH AND INSTALL 3" PVC CONDUIT TO 2" GALVANIZED STEEL REDUCER BUSHING AS SHOWN IN F.D. STD. DWG. #145AA OR 146
ITEM NO. 6.23 BGRE	FURNISH AND INSTALL 3" PVC CONDUIT TO 4" GALVANIZED STEEL REDUCER BUSHING AS SHOWN IN F.D. STD. DWG. #145AA OR 146

shall be a unit price bid for each reducer and shall cover the cost of all labor, materials, plant, equipment, insurance, samples, and tests required and necessary to furnish and install a bushing of the type specified and at the location shown or as directed and as shown on the Fire Department Standards. Said work shall also include, but not be limited to, furnishing and installing all other items necessary to complete this work and do all work incidental thereto, all in accordance with the Contract Drawings, Specifications and Standards, and as directed by the Engineer.

(I) The contract price bid for

ITEM NO. 6.23 BP	FURNISH AND INSTALL FIRE ALARM PEDESTAL BUMPERS (2 REQUIRED PER SET) IN ACCORDANCE WITH F.D. STD. DWG. #168

shall be a unit price for each set of bumpers (2 required per set) and shall cover the cost of all labor, materials, plant, equipment, insurance, samples, and tests required and necessary to furnish and install bumpers at the locations shown or as directed and as shown on the Fire Department Standards. Said work shall also include, but not be limited to, excavation and backfill; furnishing and installing steel bar reinforcement and concrete; compaction; cleaning up; temporary restoration of sidewalk surfaces; painting; and furnishing and installing all other items necessary to complete this work; and do all work incidental thereto, all in accordance with the Contract Drawings, Specifications and Standards, and as directed by the Engineer.

(J) The contract prices bid for

ITEM NO. 6.23 FC	REMOVE EXISTING F.D.N.Y. MANHOLE FRAME & COVER AND FURNISH AND INSTALL F.D.N.Y. FRAME & COVER IN ACCORDANCE WITH F.D. STD. DWG. #140
ITEM NO. 6.23 HFC	REMOVE EXISTING F.D.N.Y. SIDEWALK HANDHOLE FRAME & COVER AND FURNISH AND INSTALL F.D.N.Y. SIDEWALK HANDHOLE FRAME & COVER IN ACCORDANCE WITH F.D. STD. DWG. #143 OR #144B

shall be a unit price for each and shall cover the cost of all labor, materials, plant, equipment, insurance, samples, and tests required and necessary to remove existing F.D.N.Y. manhole frame and cover or sidewalk handhole frame & cover and furnish and install manhole frame and cover or sidewalk handhole frame & cover, at the locations shown or as directed and as shown on the Fire Department Standards. Said work shall also include, but not be limited to, furnishing and installing all other items necessary to complete this work and do all work incidental thereto, all in accordance with the Contract Drawings, Specifications and Standards, and as directed by the Engineer.

(K) The contract prices bid for

ITEM NO. 6.23 FCA	FURNISH AND INSTALL F.D.N.Y. MANHOLE FRAME & COVER IN ACCORDANCE WITH F.D. STD. DWG. #140
ITEM NO. 6.23 FCB	FURNISH AND INSTALL F.D.N.Y. MANHOLE COVER IN ACCORDANCE WITH F.D. STD. DWG. #140
ITEM NO. 6.23 HC	FURNISH AND INSTALL F.D.N.Y. SIDEWALK HANDHOLE COVER IN ACCORDANCE WITH F.D. STD. DWG. #143 OR #144B
ITEM NO. 6.23 HFCA	FURNISH AND INSTALL F.D.N.Y. SIDEWALK HANDHOLE FRAME AND COVER IN ACCORDANCE WITH F.D. STD. DWG. #143 OR #144B

shall be a unit price bid for each type and shall cover the cost of all labor, materials, plant, equipment, insurance, samples, and tests required and necessary to furnish and install the Fire Department manhole frame and/or cover or furnish and install sidewalk handhole fame and/or cover, at the location shown or as directed and as shown on the Fire Department Standards. Said work shall also include, but not be limited to, the excavation of all materials of whatever nature encountered (except excavation of boulders in open

cut and ledge rock); reinforcement; removal or abandonment, as required of parts of the existing Fire Communications System; breaking down and filling in of abandoned fire appurtenances; backfill; compaction; cleaning up; temporary restoration of street surfaces; installation and removal of temporary fire alarm communication facilities, if required; connections; and furnishing and installing all other items necessary to complete this work and do all work incidental thereto, all in accordance with the Contract Drawings, Specifications and Standards, and as directed by the Engineer.

(L) The contract prices bid for

ITEM NO. 6.23 RH	REMOVE EXISTING F.D.N.Y. SIDEWALK HANDHOLE
ITEM NO. 6.23 RM	REMOVE EXISTING F.D.N.Y. MANHOLE

shall be a unit price for each manhole or sidewalk handhole and shall cover the cost of all labor, materials, plant, equipment, insurance, samples, and tests required and necessary to remove an existing Fire Department manhole or sidewalk handhole, as specified, at the location shown or as directed. Said work shall also include, but not limited to, the removal or abandonment of an existing F.D.N.Y. manhole or sidewalk handhole; breaking down and filling in of abandoned fire appurtenances; furnishing and installing backfill; compaction; cleaning up; temporary restoration of street surfaces, if required; and furnishing and installing all other items necessary to complete this work and do all work incidental thereto, all in accordance with the Contract Drawings, Specifications and Standards, and as directed by the Engineer.

(M) The contract prices bid for

ITEM NO. 6.23 RIC	RODDING AND INSTALLING FIRE ALARM CABLE IN EXISTING TELEPHONE CONDUIT SYSTEM
ITEM NO. 6.23 RICA	ROD AND ROPE CONDUIT AND INSTALL 4 PAIR FIRE ALARM CABLE IN EXISTING VERIZON OR FIRE DEPARTMENT CONDUIT SYSTEM
ITEM NO. 6.23 RICB	ROD AND ROPE CONDUIT AND INSTALL 10 PAIR FIRE ALARM CABLE IN EXISTING VERIZON OR FIRE DEPARTMENT CONDUIT SYSTEM
ITEM NO. 6.23 RICC	ROD AND ROPE CONDUIT AND INSTALL 15 PAIR FIRE ALARM CABLE IN EXISTING VERIZON OR FIRE DEPARTMENT CONDUIT SYSTEM
ITEM NO. 6.23 RICD	ROD AND ROPE CONDUIT AND INSTALL 20 PAIR FIRE ALARM CABLE IN EXISTING VERIZON OR FIRE DEPARTMENT CONDUIT SYSTEM
ITEM NO. 6.23 RICE	ROD AND ROPE CONDUIT AND INSTALL 25 PAIR FIRE ALARM CABLE IN EXISTING VERIZON OR FIRE DEPARTMENT CONDUIT SYSTEM
ITEM NO. 6.23 RICF	ROD AND ROPE CONDUIT AND INSTALL 30 PAIR FIRE ALARM CABLE IN EXISTING VERIZON OR FIRE DEPARTMENT CONDUIT SYSTEM
ITEM NO. 6.23 RICG	ROD AND ROPE CONDUIT AND INSTALL 40 PAIR FIRE ALARM CABLE IN EXISTING VERIZON OR FIRE DEPARTMENT CONDUIT SYSTEM
ITEM NO. 6.23 RICH	ROD AND ROPE CONDUIT AND INSTALL 45 PAIR FIRE ALARM CABLE IN EXISTING VERIZON OR FIRE DEPARTMENT CONDUIT SYSTEM
ITEM NO. 6.23 RICI	ROD AND ROPE CONDUIT AND INSTALL 50 PAIR FIRE ALARM CABLE IN EXISTING VERIZON OR FIRE DEPARTMENT CONDUIT SYSTEM
ITEM NO. 6.23 RICJ	ROD AND ROPE CONDUIT AND INSTALL 55 PAIR FIRE ALARM CABLE IN EXISTING VERIZON OR FIRE DEPARTMENT CONDUIT SYSTEM
ITEM NO. 6.23 RICK	ROD AND ROPE CONDUIT AND INSTALL 60 PAIR FIRE ALARM CABLE IN EXISTING VERIZON OR FIRE DEPARTMENT CONDUIT SYSTEM
ITEM NO. 6.23 RR	ROD AND ROPE EXISTING CONDUIT
ITEM NO. 6.23 XY	FURNISH AND INSTALL POLYPROPYLENE DRAG ROPE

shall be a unit price per linear foot for drag rope with or without rodding, or cable with rodding and shall cover the cost of all labor, materials, plant, equipment, insurance, samples, and tests required and necessary to furnish and install drag rope of the type specified at the locations shown or as directed and as shown on the Fire Department Standards, including furnishing and installing all other items necessary to complete this work and do all work incidental thereto, all in accordance with the Contract Drawings, Specifications and Standards, and as directed by the Engineer.

(N) The contract prices bid for

ITEM NO. 6.23 XAPE	FURNISH AND INSTALL 1/2" GALVANIZED STEEL CONDUIT POLE RISER IN ACCORDANCE WITH FIRE DEPARTMENT STANDARD DRAWING #145AA
ITEM NO. 6.23 XBPE	FURNISH AND INSTALL 2" GALVANIZED STEEL CONDUIT POLE RISER IN ACCORDANCE WITH FIRE DEPARTMENT STANDARD DRAWING #145AA
ITEM NO. 6.23 XCPE	FURNISH AND INSTALL 3" GALVANIZED STEEL CONDUIT POLE RISER IN ACCORDANCE WITH FIRE DEPARTMENT STANDARD DRAWING #145AA OR #146
ITEM NO. 6.23 XDPE	FURNISH AND INSTALL 4" GALVANIZED STEEL CONDUIT POLE RISER IN ACCORDANCE WITH FIRE DEPARTMENT STANDARD DRAWING #145AA OR #146

shall be a unit price for each type of conduit pole riser and shall cover the cost of all labor, materials, plant, equipment, insurance, samples, and tests required and necessary to furnish and install each type of pole riser at the location shown or as directed and as shown on the Fire Department Standards. Said work shall also include, but not be limited to, connections, and furnishing and installing all other items necessary to complete this work and doing all work incidental thereto, all in accordance with the Contract Drawings, Specifications and Standards, and as directed by the Engineer.

(O) The contract price bid for

ITEM NO. 6.23 MW	FURNISH AND INSTALL 5/16 INCH 7 STRAND GALVANIZED STEEL MESSENGER WIRE AND APPURTENANCES

shall be a unit price per linear foot for each size and type of steel messenger wire, and shall cover the cost of all labor, materials, plant, equipment, insurance, samples, and tests required and necessary to furnish and install the fire alarm messager wire of the size and type specified at the locations shown or as directed and as shown on the Fire Department Standards including, but not limited to, furnishing and installing approved galvanized clamps and other appurtenances as may be required, to complete this work and do all work incidental thereto, all in accordance with the Contract Drawings, Specifications and Standards, and as directed by the Engineer.

(P) The contract price bid for

ITEM NO. 6.23 PP	PAINT EXISTING FIRE ALARM POST AND/OR HOUSING

shall be a unit price for each fire alarm post and/or box and shall cover the cost of all labor, materials, plant, equipment, insurance, samples, and tests required and necessary to paint existing fire alarm posts and/or boxes as directed and doing all work incidental thereto, all in accordance with the Contract Drawings, Specifications and Standards, and as directed by the Engineer.

Payment will be made under:

Item No.	Item	Pay Unit
6.23 AA	FURNISH AND INSTALL FIRE ALARM POST IN ACCORDANCE WITH F.D. STD. DWG. #141	EACH
6.23 AB	REMOVE EXISTING FIRE ALARM POST	EACH
6.23 AC	ADJUST FIRE ALARM POST TO NEW GRADE IN ACCORDANCE WITH F.D. STD. DWG. #167	EACH
6.23 AF	FURNISH AND INSTALL FIRE DEPARTMENT POLE TERMINAL (CHIPPY)BOX IN ACCORDANCE WITH FIRE DEPARTMENT STANDARD DRAWING #145AA	EACH

6.23 AFA	FURNISH AND INSTALL FIRE DEPARTMENT POLE TERMINAL (CHIPPY) BOX IN ACCORDANCE WITH FIRE DEPARTMENT STANDARD DRAWING #145AA WITHOUT TERMINATING CABLES	EACH
6.23 BA	FURNISH AND INSTALL FIRE ALARM POST AND SUBBASE IN ACCORDANCE WITH F.D. STD. DWG. #141	EACH
6.23 BBS	FURNISH AND INSTALL 3" 90 DEGREE P.V.C. WIDE BEND, SCHEDULE 40, U.L. 651 (WITHOUT PAVEMENT EXCAVATION) IN ACCORDANCE WITH F.D. STD. DWG. #141	EACH
6.23 BBSE	FURNISH AND INSTALL 3" 90 DEGREE P.V.C. WIDE BEND, SCHEDULE 40, U.L. 651 (WITH PAVEMENT EXCAVATION) IN ACCORDANCE WITH F.D. STD. DWG. #141	EACH
6.23 BCS	FURNISH ANC INSTALL 3" P.V.C. CONDUIT, SCHEDULE 40, U.L. 651 (WITHOUT PAVEMENT EXCAVATION)	L.F.
6.23 BCSE	FURNISH AND INSTALL 3" P.V.C. CONDUIT, SCHEDULE 40, U.L. 651 (WITH PAVEMENT EXCAVATION)	L.F.
6.23 BD	FURNISH AND INSTALL 4-PAIR FIRE ALARM CABLE	L.F.
6.23 BE	FURNISH AND INSTALL FIRE DEPARTMENT MANHOLE TYPE "A" WITH FRAME AND COVER IN ACCORDANCE WITH F.D. STD. DWG. #140, #144, & #144E	EACH
6.23 BES	FURNISH AND INSTALL FIRE DEPARTMENT SLOTTED MANHOLE TYPE "A" WITH FRAME AND COVER IN ACCORDANCE WITH F.D. STD. DWG. #140, #144S & #144E	EACH
6.23 BF	FURNISH AND INSTALL FIRE DEPARTMENT POLE TERMINAL (HOFFMAN) BOX IN ACCORDANCE WITH FIRE DEPARTMENT STANDARD DRAWING #146	EACH
6.23 BFA	FURNISH AND INSTALL FIRE DEPARTMENT 48 WIRE TERMINAL BOX AND TERMINATE FIRE ALARM CABLES	EACH
6.23 BFB	FURNISH AND INSTALL FIRE DEPARTMENT 24 WIRE TERMINAL BOX AND TERMINATE FIRE ALARM CABLES	EACH
6.23 BFC	FURNISH AND INSTALL FIRE DEPARTMENT 12 WIRE TERMINAL BOX AND TERMINATE FIRE ALARM CABLES	EACH
6.23 BFE	FURNISH AND INSTALL FIRE DEPARTMENT POLE TERMINAL (HOFFMAN) BOX IN ACCORDANCE WITH FIRE DEPARTMENT STANDARD DRAWING #146 WITHOUT TERMINATING CABLES	EACH
6.23 BGB	FURNISH AND INSTALL 4" PVC CONDUIT TO 4" GALVANIZED STEEL BUSHING AS SHOWN IN F.D. STD. DWG. #145AA OR 146	EACH
6.23 BGD	FURNISH AND INSTALL 3" PVC CONDUIT TO 3" GALVANIZED STEEL BUSHING AS SHOWN IN F.D. STD. DWG. #145AA OR 146	EACH
6.23 BGR	FURNISH AND INSTALL 4" PVC CONDUIT TO 2" GALVANIZED STEEL REDUCER BUSHING AS SHOWN IN F.D. STD. DWG. #145AA	EACH
6.23 BGRA	FURNISH AND INSTALL 4" PVC CONDUIT TO 3" GALVANIZED STEEL REDUCER BUSHING AS SHOWN IN F.D. STD. DWG. #145AA OR 146	EACH
6.23 BGRC	FURNISH AND INSTALL 3" PVC CONDUIT TO 2" GALVANIZED STEEL REDUCER BUSHING AS SHOWN IN F.D. STD. DWG. #145AA OR 146	EACH
6.23 BGRE	FURNISH AND INSTALL 3" PVC CONDUIT TO 4" GALVANIZED STEEL REDUCER BUSHING AS SHOWN IN F.D. STD. DWG. #145AA OR 146	EACH
6.23 BGS	FURNISH AND INSTALL 4" P.V.C. CONDUIT, SCHEDULE 40, U.L. 651 (WITHOUT PAVEMENT EXCAVATION)	L.F.
6.23 BGSE	FURNISH AND INSTALL 4" P.V.C. CONDUIT, SCHEDULE 40, U.L. 651 (WITH PAVEMENT EXCAVATION)	L.F.
6.23 BGT	FURNISH AND INSTALL 2 – 4" P.V.C. CONDUITS, SCHEDULE 40, U.L. 651 IN ONE TRENCH (WITHOUT PAVEMENT EXCAVATION, ONE ON TOP OF THE OTHER)	L.F.

6.23 BGTE	FURNISH AND INSTALL 2 – 4" P.V.C. CONDUITS, SCHEDULE 40, U.L. 651 IN ONE TRENCH (WITH PAVEMENT EXCAVATION, ONE ON TOP OF THE OTHER)	L.F.
6.23 BH	FURNISH AND INSTALL 4" 90 DEGREE P.V.C. WIDE BEND, SCHEDULE 40, U.L. 651 (WITHOUT PAVEMENT EXCAVATION) IN ACCORDANCE WITH F.D. STD. DWG. #141 OR #145AA	EACH
6.23 BHE	FURNISH AND INSTALL 4" 90 DEGREE P.V.C. WIDE BEND, SCHEDULE 40, U.L. 651 (WITH PAVEMENT EXCAVATION) IN ACCORDANCE WITH F.D. STD. DWG. #141 OR #145AA	EACH
6.23 BP	FURNISH AND INSTALL FIRE ALARM PEDESTAL BUMPERS (2 REQUIRED PER SET) IN ACCORDANCE WITH F.D. STD. DWG. #168	SETS
6.23 CB	FURNISH AND INSTALL 2 – 3" 90 DEGREE P.V.C. WIDE BENDS, SCHEDULE 40, U.L. 651 IN ONE TRENCH (WITHOUT PAVEMENT EXCAVATION) IN ACCORDANCE WITH F.D. STD. DWG. #141	EACH
6.23 CBE	FURNISH AND INSTALL 2 – 3" 90 DEGREE P.V.C. WIDE BENDS, SCHEDULE 40, U.L. 651 IN ONE TRENCH (WITH PAVEMENT EXCAVATION) IN ACCORDANCE WITH F.D. STD. DWG. #141	EACH
6.23 CC	FURNISH AND INSTALL 2 – 3" P.V.C. CONDUITS, SCHEDULE 40, U.L. 651 IN ONE TRENCH (WITHOUT PAVEMENT EXCAVATION, ONE ON TOP OF THE OTHER)	L.F.
6.23 CCE	FURNISH AND INSTALL 2 – 3" P.V.C. CONDUITS, SCHEDULE 40, U.L. 651 IN ONE TRENCH (WITH PAVEMENT EXCAVATION, ONE ON TOP OF THE OTHER)	L.F.
6.23 DC	FURNISH AND INSTALL 10 PAIR FIRE ALARM CABLE	L.F.
6.23 DDA	FURNISH AND INSTALL 15 PAIR FIRE ALARM CABLE	L.F.
6.23 DDB	FURNISH AND INSTALL 20 PAIR FIRE ALARM CABLE	L.F.
6.23 DDC	FURNISH AND INSTALL 25 PAIR FIRE ALARM CABLE	L.F.
6.23 DDD	FURNISH AND INSTALL 30 PAIR FIRE ALARM CABLE	L.F.
6.23 DDE	FURNISH AND INSTALL 40 PAIR FIRE ALARM CABLE	L.F.
6.23 DF	FURNISH AND INSTALL 45 PAIR FIRE ALARM CABLE	L.F.
6.23 DG	FURNISH AND INSTALL 50 PAIR FIRE ALARM CABLE	L.F.
6.23 DH	FURNISH AND INSTALL 55 PAIR FIRE ALARM CABLE	L.F.
6.23 DJ	FURNISH AND INSTALL 60 PAIR FIRE ALARM CABLE	L.F.
6.23 EB	FURNISH AND INSTALL FIRE DEPARTMENT MANHOLE TYPE "B" WITH FRAME & COVER IN ACCORDANCE WITH F.D. STD. DWG. #140, #144, #144C, #144CC, & #144E	EACH
6.23 FC	REMOVE EXISTING F.D.N.Y. MANHOLE FRAME & COVER AND FURNISH AND INSTALL F.D.N.Y. FRAME & COVER IN ACCORDANCE WITH F.D. STD. DWG. #140	EACH
6.23 FCA	FURNISH AND INSTALL F.D.N.Y. MANHOLE FRAME & COVER IN ACCORDANCE WITH F.D. STD. DWG. #140	EACH
6.23 FCB	FURNISH AND INSTALL F.D.N.Y. MANHOLE COVER IN ACCORDANCE WITH F.D. STD. DWG. #140	EACH
6.23 HC	FURNISH AND INSTALL F.D.N.Y. SIDEWALK HANDHOLE COVER IN ACCORDANCE WITH F.D. STD. DWG. #143 AND #144B	EACH
6.23 HFC	REMOVE EXISTING F.D.N.Y. SIDEWALK HANDHOLE FRAME & COVER AND FURNISH AND INSTALL F.D.N.Y. SIDEWALK HANDHOLE FRAME & COVER IN ACCORDANCE WITH F.D. STD. DWG. #143 & #144B	EACH
6.23 HFCA	FURNISH AND INSTALL F.D.N.Y. SIDEWALK HANDHOLE FRAME AND COVER IN ACCORDANCE WITH F.D. STD. DWG. #143 AND #144B	EACH
6.23 HH	FURNISH AND INSTALL F.D.N.Y. SIDEWALK HANDHOLE WITH FRAME AND COVER IN ACCORDANCE WITH F.D. STD. DWG. #143, #144B, & #144E	EACH
6.23 HHA	FURNISH AND INSTALL F.D.N.Y. SIDEWALK HANDHOLE WITH FRAME AND COVER IN ACCORDANCE WITH F.D. STD. DWG. #143	EACH

6.23 HHS	FURNISH AND INSTALL F.D.N.Y. SIDEWALK SLOTTED HANDHOLE WITH FRAME AND COVER IN ACCORDANCE WITH F.D. STD. DWG. #144E & #144BS	EACH
6.23 MW	FURNISH AND INSTALL 5/16 INCH 7 STRAND GALVANIZED STEEL MESSENGER WIRE AND APPURTENANCES	L.F.
6.23 PP	PAINT EXISTING FIRE ALARM POST AND/OR HOUSING	EACH
6.23 RH	REMOVE EXISTING F.D.N.Y. SIDEWALK HANDHOLE	EACH
6.23 RIC	RODDING AND INSTALLING FIRE ALARM CABLE IN EXISTING TELEPHONE CONDUIT SYSTEM	L.F.
6.23 RICA	ROD AND ROPE CONDUIT AND INSTALL 4 PAIR FIRE ALARM CABLE IN EXISTING VERIZON OR FIRE DEPARTMENT CONDUIT SYSTEM	L.F.
6.23 RICB	ROD AND ROPE CONDUIT AND INSTALL 10 PAIR FIRE ALARM CABLE IN EXISTING VERIZON OR FIRE DEPARTMENT CONDUIT SYSTEM	L.F.
6.23 RICC	ROD AND ROPE CONDUIT AND INSTALL 15 PAIR FIRE ALARM CABLE IN EXISTING VERIZON OR FIRE DEPARTMENT CONDUIT SYSTEM	L.F.
6.23 RICD	ROD AND ROPE CONDUIT AND INSTALL 20 PAIR FIRE ALARM CABLE IN EXISTING VERIZON OR FIRE DEPARTMENT CONDUIT SYSTEM	L.F.
6.23 RICE	ROD AND ROPE CONDUIT AND INSTALL 25 PAIR FIRE ALARM CABLE IN EXISTING VERIZON OR FIRE DEPARTMENT CONDUIT SYSTEM	L.F.
6.23 RICF	ROD AND ROPE CONDUIT AND INSTALL 30 PAIR FIRE ALARM CABLE IN EXISTING VERIZON OR FIRE DEPARTMENT CONDUIT SYSTEM	L.F.
6.23 RICG	ROD AND ROPE CONDUIT AND INSTALL 40 PAIR FIRE ALARM CABLE IN EXISTING VERIZON OR FIRE DEPARTMENT CONDUIT SYSTEM	L.F.
6.23 RICH	ROD AND ROPE CONDUIT AND INSTALL 45 PAIR FIRE ALARM CABLE IN EXISTING VERIZON OR FIRE DEPARTMENT CONDUIT SYSTEM	L.F.
6.23 RICI	ROD AND ROPE CONDUIT AND INSTALL 50 PAIR FIRE ALARM CABLE IN EXISTING VERIZON OR FIRE DEPARTMENT CONDUIT SYSTEM	L.F.
6.23 RICJ	ROD AND ROPE CONDUIT AND INSTALL 55 PAIR FIRE ALARM CABLE IN EXISTING VERIZON OR FIRE DEPARTMENT CONDUIT SYSTEM	L.F.
6.23 RICK	ROD AND ROPE CONDUIT AND INSTALL 60 PAIR FIRE ALARM CABLE IN EXISTING VERIZON OR FIRE DEPARTMENT CONDUIT SYSTEM	L.F.
6.23 RM	REMOVE EXISTING F.D.N.Y. MANHOLE	EACH
6.23 RR	ROD AND ROPE EXISTING CONDUIT	L.F.
6.23 XAPE	FURNISH AND INSTALL 1/2" GALVANIZED STEEL CONDUIT POLE RISER IN ACCORDANCE WITH FIRE DEPARTMENT STANDARD DRAWING #145AA	EACH
6.23 XB	FURNISH AND INSTALL 2" GALVANIZED STEEL CONDUIT (WITHOUT PAVEMENT EXCAVATION)	L.F.
6.23 XBB	FURNISH AND INSTALL 2" GALVANIZED STEEL 90 DEGREE BEND (WITHOUT PAVEMENT EXCAVATION) IN ACCORDANCE WITH F.D. STD. DWG. #145BB	EACH
6.23 XBBE	FURNISH AND INSTALL 2" GALVANIZED STEEL 90 DEGREE BEND (WITH PAVEMENT EXCAVATION) IN ACCORDANCE WITH F.D. STD. DWG. #145BB	EACH
6.23 XBE	FURNISH AND INSTALL 2" GALVANIZED STEEL CONDUIT (WITH PAVEMENT EXCAVATION)	L.F.

6.23 XBPE	FURNISH AND INSTALL 2" GALVANIZED STEEL CONDUIT POLE RISER IN ACCORDANCE WITH FIRE DEPARTMENT STANDARD DRAWING #145AA	EACH
6.23 XCPE	FURNISH AND INSTALL 3" GALVANIZED STEEL CONDUIT POLE RISER IN ACCORDANCE WITH FIRE DEPARTMENT STANDARD DRAWING #145AA OR #146	EACH
6.23 XDPE	FURNISH AND INSTALL 4" GALVANIZED STEEL CONDUIT POLE RISER IN ACCORDANCE WITH FIRE DEPARTMENT STANDARD DRAWING #145AA OR #146	EACH
6.23 XCC	FURNISH AND INSTALL 3" GALVANIZED STEEL 90-DEGREE BEND (WITHOUT PAVEMENT EXCAVATION)	EACH
6.23 XCCE	FURNISH AND INSTALL 3" GALVANIZED STEEL 90-DEGREE BEND (WITH PAVEMENT EXCAVATION)	EACH
6.23 XD	FURNISH AND INSTALL 4" GALVANIZED STEEL CONDUIT (WITHOUT PAVEMENT EXCAVATION)	L.F.
6.23 XDD	FURNISH AND INSTALL 4" GALVANIZED STEEL 90-DEGREE BEND (WITHOUT PAVEMENT EXCAVATION)	EACH
6.23 XDDE	FURNISH AND INSTALL 4" GALVANIZED STEEL 90-DEGREE BEND (WITH PAVEMENT EXCAVATION)	EACH
6.23 XDE	FURNISH AND INSTALL 4" GALVANIZED STEEL CONDUIT (WITH PAVEMENT EXCAVATION)	L.F.
6.23 XC	FURNISH AND INSTALL 3" GALVANIZED STEEL CONDUIT (WITHOUT PAVEMENT EXCAVATION)	L.F.
6.23 XCE	FURNISH AND INSTALL 3" GALVANIZED STEEL CONDUIT (WITH PAVEMENT EXCAVATION)	L.F.
6.23 XY	FURNISH AND INSTALL POLYPROPYLENE DRAG ROPE	L.F.

SECTION 8.00 MT – Microtrenching

8.00MT.1. INTENT. This section describes Microtrenching.

8.00MT.2. DESCRIPTION. Microtrenching involves the placement of shallow depth microduct systems in street and sidewalk applications. This process includes the saw cutting of sidewalks and/or streets, installation of microduct systems and fiber optic wiring, restoration of sidewalks and/or streets and disposal of all unused debris. Locations of saw-cut can be from manhole (if necessary) in street to curb entrance; either at curb seam or below curb; and then in sidewalk expansion joint between flag and curb. All microduct systems must be placed at a minimum depth of 4" below sidewalk grade and 6" in depth below street grade locations. If manhole entrance is necessary the excavation to enter manhole system shall be the minimum required to gain entrance to said manhole.

8.00MT.3. GENERAL REQUIRMENTS.

(A) DISPOSAL OF MATERIALS

1. All materials that are not reused pursuant to Subsection 6.02.3 of the NYC Department of Transportation, Standard Highway Specifications shall be disposed of in compliance with the applicable requirements of **Sections 1.06.47 and 1.06.48** in General Conditions.

(B) EXPOSED STRUCTURES TO BE PROTECTED

1. All exposed sewers, manholes, receiving basins, water mains and other hardware and structures shall be carefully protected.

8.00MT.4. MICROTRENCHING CONSTRUCTION METHODS.

All trenching/excavations shall be carried to the required depths in such a manner as to produce a pathway that produces an undisturbed subgrade and allows for standard restoration.

1. Cutting expansion joints in Sidewalks: Expansion joints shall be cut using a wet-cut methodology to reduce damage to adjacent sidewalk flags. All cuts shall be approximately 1" wide to approximately 9"-12" in depth to allow for the microduct system to be placed at a minimum of 4" below sidewalk grade. The depth of the cut will depend upon the depth of the existing flags, pathway required and existing sidewalk furniture and fixtures (including but not limited to tree pits, roots, parking meters, mailboxes, bike racks, etc.).

2. Sidewalk flags and placement of utility handholes and/or grade-level boxes: All handholes/grade-level boxes shall be centered in a sidewalk flag. This flag will be removed in whole, sub-grade access placed and sidewalk flag restored. At no time will handhole or grade-level box be in the corner of a sidewalk flag to ensure concrete integrity of the flag. In the event of the removal of a sidewalk flag, the flag should be removed in its entirety and replaced in accordance with all applicable sidewalk restoration rules and regulations.

    a. All handholes and/or grade-level boxes must meet weight bearing requirements for the application and comply with ANSI / SCTE 77 2007:

Application	Loading Requirements			
	Design Load (lbs)	Test Load w/ F.S. 1.5 (lbs)	Design Load (psf)	Test Load w/ F.S. 1.5 (psf)
Tier 5 – Sidewalk applications with a safety factor for occasional non-deliberate vehicular traffic	5,000	7,500	600	900
Tier 8 – Sidewalk applications with a safety factor for non-deliberate vehicular traffic	8,000	12,000	600	900
Tier 15 – Driveway, parking lot, and off roadway applications subject to occasional non-deliberate heavy vehicular traffic	15,000	22,500	800	1,200
Tier 22 – Driveway, parking lot and off roadway applications subject to occasional non-deliberate heavy vehicular traffic	22,500	33,750	800	1,200
AASHTO H-20 - Deliberate vehicular traffic applications	Certified pre-cast concrete, cast iron, or AASHTO recognized materials			

b. Minimum handhole size is 17"x30"x24"
c. Grade-level Box minimum size is 3'x5'x3'
d. All handholes/grade-level boxes must be composite to negate slippage due to environmental factors

3. Manhole entrance: Manholes are generally located within the street/vehicular pathway. Access to any manhole shall be kept to a minimum to gain entrance for microduct pathway, unless other obstructions exist which would make it necessary to continue the pathway in the roadway. Entrances to manhole shall be via pit directly adjacent to manhole and in direct line with pathway direction to minimize vehicular and pedestrian impact. All manhole related activities shall be performed in accordance with applicable rules and regulations.

4. Duct pathway placement: All microducts shall be placed vertically into the saw-cut trench, and the microduct should always be covered with requisite backfill material

8.00MT.5. RESTORATION.

1. Sidewalk expansion joint restoration:

a. Sidewalk expansion joints are to be restored using only NYC DOT approved materials. All expansion joints shall be recessed 1/2" below finished sidewalk surface and sealed with sealer, on an approved bond breaker, as soon as practical.

b. All expansion joints shall be sealed with a sealant meeting ASTM C 920, Type M, Grade P, Class 25, Use T_1,, and color to match to that of the adjacent sidewalk. The sealant shall be a rapid-setting, polyurethane-based joint sealant and shall be a self-leveling compound that provides for elongation. The sealant should be applied to avoid spillage onto sidewalk surface area.

   i. Joints are to be recessed 1/2" with the finished surface.
   ii. Joints should not be sealed during inclement weather.
   iii. Application of sealant shall be as per the manufacturer's written instructions.

2. Sidewalk flag restoration:

   a. Any flags that need to be restored must be done according the NYC DOT specifications as outlined in the Standard Highway Specifications Volumes I and II, latest version and as currently amended.

   b. Any flags that are below the standards set forth in NYC DOT specifications as outlined in the Standard Highway Specifications, Volumes I and II, and are directly adjacent to the original flag being replaced shall be replaced in accordance with Section 2(a) above.

3. Street/Asphalt restoration:

   a. All street/asphalt restoration must be done according to the NYC DOT specifications Section 2.22, Type 1 – Hot poured sealer as outlined in the Standard Highway Specifications Volumes I and II, latest version and as currently amended. Joints are to be finished flush with the pavement.

4. Street/Concrete restoration:

   a. All street/concrete pavement restoration shall be done in accordance with the requirements for sidewalk expansion joint restoration, above.

END OF SECTION

ATTACH TO CONTRACT DOCUMENTS

THE CITY OF NEW YORK
DEPARTMENT OF DESIGN AND CONSTRUCTION
INFRASTRUCTURE DIVISION
BUREAU OF DESIGN

PROJECT ID: QED1007

FOR THE CONSTRUCTION OF TRUNK AND DISTRIBUTION WATER MAINS IN ARVERNE BOULEVARD BETWEEN BEACH 59TH STREET AND BEACH 54TH STREET; ROCKAWAY BEACH BOULEVARD BETWEEN BEACH 54TH STREET AND BEACH 49TH STREET; BEACH 67TH STREET BETWEEN ROCKAWAY FREEWAY AND ROCKAWAY BEACH BOULEVARD; ROCKAWAY BEACH BOULEVARD BETWEEN BEACH 54TH STREET AND BEACH 53RD STREET; AND ROCKAWAY BEACH BOULEVARD BETWEEN BEACH 52ND STREET AND BEACH 49TH STREET

INCLUDING STORM AND SANITARY SEWER WORK

Together With All Work Incidental Thereto

BOROUGH OF QUEENS

ADDENDUM NO. 2

DATED: June 23, 2015

This Addendum is issued for the purpose of amending the requirements of the contract documents and is hereby made part of said contract documents to the same extent as if it was originally included therein.

The Standard Sewer And Water Main Specifications of the Department of Environmental Protection (dated July 1, 2014), Sewer Design Standards of the Department of Environmental Protection (dated (September 2007) Revised January 2009), Water Main Standard Drawings of the Department of Environmental Protection (latest revisions), Specifications For Trunk Main Work of the Department of Environmental Protection (dated July 2014) and the Standard Highway Specifications (Volumes I and II) of the Department of Transportation (dated November 1, 2010) of The City of New York, shall be included as part of the contract documents. These said specifications and standard drawings are hereby revised under the following section headings:

A. NOTICE TO BIDDERS
B. AMENDMENTS TO THE STANDARD HIGHWAY SPECIFICATIONS
C. AMENDMENTS TO THE STANDARD SEWER AND WATER MAIN SPECIFICATIONS
D. AMENDMENTS TO THE SPECIFICATIONS FOR TRUNK MAIN WORK

A. NOTICE TO BIDDERS

(1) (A) The Contractor is advised that copies of the Standard Sewer And Water Main Specifications (dated July 1, 2014), Sewer Design Standards (dated (September 2007) Revised January 2009), Specifications For Trunk Main Work (dated July 2014) and Water Main Standard Drawings (latest revisions) are available to all prospective bidders at no cost upon presentation of receipt of purchase of Bid Package at the following location:

Department of Design and Construction
Division of Infrastructure
Design Services, Specifications, 3rd Floor
30-30 Thomson Avenue
Long Island City, NY 11101

(B) The Contractor is advised that copies of the Standard Highway Specifications (Volume I and II) (dated November 1, 2010), Standard Highway Details of Construction (latest revisions), Division of Street Lighting Specifications (latest revisions), Division of Street Lighting Standard Drawings (latest revisions), Standard Specifications for Traffic Signals (latest revisions), and Standard Drawings for Traffic Signals (latest revisions) are available to all prospective bidders for a fee at the following location:

Department of Transportation
55 Water Street, Ground Floor
New York City, NY 10041

(2) The Contractor is notified that a Notice To Proceed (NTP) date will be issued for work to commence within twenty-one (21) to thirty (30) days of Contract Registration.

(3) The Contractor shall furnish, install, maintain and subsequently remove temporary Protective Tree Barriers. Protective Tree Barriers shall be Type B, unless otherwise directed by the Engineer, and shall be constructed and installed as shown on the Protective Tree Barrier sketch in Department Of Transportation, Standard Highway Details Of Construction, Drawing No. H-1046A, as directed by the Engineer, and in accordance with Department of Parks and Recreation requirements.

(4) All utility locations and invert elevations are not guaranteed, nor is there any guarantee that all existing utilities, whether functional or abandoned within the project area are shown.

(5) All existing house connections shall be maintained and supported during construction. The Contractor shall replace any existing house connection damaged as a result of the Contractor's construction operations as ordered by the Engineer at no cost to the City.

(6) The Contractor is advised that any City owned light poles, traffic signals, street name signs, traffic signs and encumbrances including, but not limited to, underground conduit displaced as the result of the installation of the new sewers, water mains, catch basins, catch basin connections and appurtenances shall be replaced in kind and as directed by the Engineer. The cost of such work shall be deemed included in the prices bid for all items of work under this contract.

(7) The Contractor is notified that Victaulic Style 77 Coupling is no longer acceptable for use in any steel water main work. All reference to Victaulic Style 77 Coupling within the Standard Sewer And Water Main Specifications of the Department of Environmental Protection (dated July 1, 2014), the Water Main Standard Drawings of the Department of Environmental Protection (latest revisions), the Specifications For Trunk Main Work (dated July 2014), and the contract drawings, shall be replaced with Bolted Split-Sleeve Restrained Coupling.

(8) The Contractor is notified that wherever the Item No. "6.52" and words "flagger", "flagperson" and "flagman" are used in the contract documents and drawings it shall mean the Item No. "6.52 CG" and the words "Crossing Guard", respectively. The Contractor is advised that until the Comptroller of the

City of New York sets a prevailing wage rate for crossing guards, there are no prevailing wage rates for crossing guards.

(9) The Contractor is notified that the fuel cost per gallon used in the formula under **Sub-Article 26.2.8** of the Standard Construction Contract for **Extra Work** will be derived from the fuel price index for the United States East Coast published weekly by the United States Energy Information Administration ("USEIA"), and available on its website at http://www.eia.gov/petroleum/gasdiesel/ . The USEIA published cost per gallon for the applicable fuel on the East Coast for the week in which the first day of each calendar quarter during the contract term occurs (i.e., January 1st, April 1st, July 1st and September 1st) will be used in the reimbursement formula for all **Extra Work** invoiced that was performed during that calendar quarter. Should the USEIA stop publishing this fuel price index, the fuel cost per gallon will be determined by reference to a substitute index to be agreed upon by the Contractor and the City.

(10)The Contractor is responsible for any damage to the existing street and traffic signal equipment, including underground conduits and the safety of both pedestrian and vehicular traffic for the duration of the contract.

Should any conduits, cables or foundations need repair due to the Contractor's negligent operations during construction, all work shall be performed according to NYCDOT Bureau of Traffic's Standard Drawings and Specifications at the sole expense of the Contractor.

It is the Contractor's responsibility to secure an approved electrical contractor to perform all traffic signal work (if any). For list of approved electrical contractors, contact Mr. Michael R. LeFosse of New York City Department of Transportation at (718) 786-2236.

(11)The Contractor is advised that where the existing roadway pavement is designated to be replaced from curb to curb, then no full depth saw cutting of pavement for sewer and water main trenches will be required, except at the limits of full width pavement restoration. No separate or additional payment will be made for any saw cutting.

(12)The Contractor shall exercise extreme caution and take all necessary precautions in placing sheeting and excavating to prevent any damage to the existing NYC TRANSIT'S subway structures and its appurtenances during construction work throughout the project area. The Contractor shall take full responsibility to protect the said NYC TRANSIT'S subway structures and its appurtenances and any damage caused by the Contractor's operations shall be made good by the Contractor to the satisfaction of the Engineer at no additional cost to the City.

(13)The Contractor shall submit shop drawings to NYC Transit Authority showing all the details and methods of construction, such as, sheeting and bracing, including the Contractor's procedure and sequence of construction, supporting and/or protection of the existing TA's structures and its appurtenances, with necessary design calculations for approval prior to starting of the construction. The design shall be made by a New York State Licensed Professional Engineer skilled in this type of construction and as further evidenced by the imprint of Professional Engineer's seal and signature on all drawings. The cost of this work shall be deemed included in the price bid for all items of work under this contract.

(14)The Contractor shall install new curb and concrete sidewalk within the project limit at the locations where required due to missing or defective curb and/or sidewalk as directed by the Resident Engineer. New curbs and sidewalks shall be constructed in compliance with NYCDOT's latest requirements and specifications. Payment for this work shall be made under the appropriate curb and sidewalk items. Any damage to curbs and sidewalks caused by the Contractor's construction operation shall be repaired at the sole expense of the Contractor. The cost for curb and sidewalk work required for house connection drain and catch basin installation shall be deemed included in the prices bid for house connection drains and catch basins.

(15)"As-Built" Drawings For Water Mains And Appurtenances 24-Inches (600-mm.) And Larger: Upon the completion of the work for each Capital Project and as a condition precedent to obtaining the

certificate for substantial completion for each Capital Project under Article 44 of the Contract, the Contractor shall furnish "As-Built" drawings for water mains and appurtenances 24-inches and larger to the City. The Contractor shall prepare and submit the "As-Built" record drawings to the Engineer for approval. Approved "As-Built" drawings shall be delivered to the Department of Design and Construction, 30-30 Thomson Avenue, Long Island City, New York, 11101-3045. The following guideline is provided for the preparation of "As-Built" record drawings:

(A) The Contractor shall prepare the "As-Built" drawings on AutoCAD and shall provide to the City two (2) sets of Mylar and AutoCAD files on a CD. The drawings on CD's and the plotted Mylar's shall conform to the standard size of 22" x 36" (559-mm. x 914-mm.) using a 1"=30' (1:360) horizontal and 1"=10' (1:120) vertical scale. The Mylar shall be 3-mil in thickness.

(B) The "As-Built" drawings shall include but not be limited to the following guidelines summarized below:

(1) Drawings shall consist of the same legend and layout of title boxes shown on the contract drawings.
(2) Each plotted Mylar drawing shall contain the signature and stamp of the Contractor's NYS Professional Engineer/Registered Architect.
(3) The drawings shall include:
(a) street name and crossing street(s) or distance from;
(b) north arrow;
(c) property lines and widths;
(d) legal and existing street widths, street alignment and grades;
(e) "new" curb lines and widths;
(f) water main center line measured off the "new" curb line;
(g) horizontal stationing for all valves, hydrants, outlets, blow-offs, house service connections, etc., measured on a horizontal line as established by the Borough Office Bureau of Topographic;
(h) alignment and appurtenance location stationing, and deflection angles;
(i) cover and elevations (Datum used shall be that of the Borough where work is located);
(j) location of pipe joints;
(k) profile of all piping;
(l) complete details of all outlet piping roundabouts;
(m) complete details of all blow-off connections to the sewer;
(n) complete details of all air cocks;
(o) location of taps and access manholes;
(p) location of all cathodic protection stations;
(q) Venturi sensing lines plans and profiles;
(r) all appropriate notes.

(C) The cost of preparing and submitting "As-Built" approved drawings shall be deemed included in the prices bid for all scheduled bid items in the contract. No separate or additional payment will be made for this work.

(16)The Contractor is notified that as part of this contract a "Cathodic Protection (CP) System Survey and Engineering Study of Soil and Stray Currents and Cathodic Protection System Design" has been prepared by the firm of CorrTech, Inc.. The Contractor's attention is directed to the Cathodic Protection Design drawings consisting of eight (8) sheets that are included in the contract drawings; to the Cathodic Protection (CP) System Survey and Engineering Study of Soil and Stray Currents and Cathodic Protection System Design report that consists of eighteen (18) pages that is attached to the end of this addendum; and to the Quantity and Cost Estimating report consisting of one (1) page that is attached to the end of this addendum.

B. AMENDMENTS TO THE STANDARD HIGHWAY SPECIFICATIONS

(NO TEXT)

C. AMENDMENTS TO THE STANDARD SEWER AND WATER MAIN SPECIFICATIONS

(1) **Refer** to **Subsection 10.15 - Notice To Utility Companies, Etc., To Remove Structures Occupying Place Of Sewers, Water Mains Or Appurtenances**, Page I-11:
Add the following to **Subsection 10.15**:

(1) PUBLIC SERVICE ENTERPRISE GROUP OF LONG ISLAND (PSE&G LI)

There are PSE&G LI facilities in the area of construction. The Contractor shall notify PSE&G LI at least seventy-two (72) hours prior to the start of construction by contacting Mr. Kevin D. Rodgers at (516) 949-8444.

(2) NATIONAL GRID

There are NATIONAL GRID facilities in the area of construction. The Contractor shall notify NATIONAL GRID at least seventy-two (72) hours prior to the start of construction by contacting Mr. Neville Jacobs Jr. at (718) 963-5612.

(3) VERIZON/DEWBERRY

There are VERIZON/DEWBERRY facilities in the area of construction. The Contractor shall notify VERIZON/DEWBERRY at least seventy-two (72) hours prior to the start of construction by contacting Mr. Rohan Eccles, P.E. at (718) 977-8142.

(4) TIME WARNER CABLE OF NEW YORK CITY

There are TIME WARNER CABLE facilities in the area of construction. The Contractor shall notify TIME WARNER CABLE at least seventy-two (72) hours prior to the start of construction by contacting Mr. John Piazza at (718) 888-4261.

(2) **Refer** to **Subsection 10.21 - Contractor To Notify City Departments**, Page I-13:
Add the following to **Subsection 10.21**:

(1) N.Y.C. D.E.P., BUREAU OF WATER AND SEWERS OPERATIONS

The Contractor shall notify Mr. Edward Coleman, P.E., Assistant Commissioner, Engineering and Planning at the Department of Environmental Protection, 59-17 Junction Blvd., 3rd floor low rise, Corona N.Y. 11368, at least thirty (30) days prior to the start of construction.

(2) NEW YORK CITY FIRE DEPARTMENT

The Contractor shall notify the Bureau of Fire Communications at least thirty (30) days prior to the start of construction by contacting Mr. Nick Varone at (718) 624-4194.

(3) N.Y.C. DEPARTMENT OF TRANSPORTATION

The Contractor shall notify Mr. Steve Galgano, P.E. Chief of Signal/Street Lighting Operations, 34-02 Queens Blvd., Long Island City, N.Y. 11101 at (718) 786-3550, at least seventy-two (72) hours prior to the start of construction.

(4) N.Y.C. DEPARTMENT OF PARKS AND RECREATION

The Contractor shall notify the Parks Department at least seventy-two (72) hours prior to the start of construction by contacting Mr. Jimmy Mui at (718) 393-7240.

(5) N.Y.C. TRANSIT AUTHORITY

(a) The Contractor shall notify Outside Projects at least seven (7) days prior to the start of construction.

The Contractor shall contact:

Mr. Mohamed Adam, P.E.
Project Engineer-Outside Projects
New York City Transit
2 Broadway, 7th Floor
New York, N.Y. 10004
Attention Ms. Alina Avadanei
Telephone No. (646) 252-3641

(b) The Contractor is advised that bus routes as well as bus stops, within the scope of this project may be affected during construction operations. The Contractor shall notify the Transit Authority at least two (2) weeks prior to the start of construction, in order to make the necessary arrangements as required under the NYC TRANSIT GENERAL NOTES included in **Section 10.25, paragraph (A)**, **Section 10.25 paragraph (B)**, and **Section 10.25 paragraph (C)** of this addendum.

Arrangements shall be made through:

Ms. Sarah Wyss
Director Of Short Range, Bus Service Planning (SRB)
New York City Transit
2 Broadway, 17th Floor
New York, N.Y. 10004
Telephone No. (646) 252-5517
sarah.wyss@nyct.com

(c) In addition, the Contractor is advised that construction operations might affect subway lines and stations; and NYCT facilities (i.e. manholes, ducts, etc.). The Contractor shall notify the Transit Authority as required and specified in **Section 10.25 paragraph (A)**, **Section 10.25 paragraph (B)**, and **Section 10.25 paragraph (C)** of this addendum.

(3) Refer to **Subsection 10.25 - Contractor To Carry Out Agreement Between City And Railroad Company Or Property Owner(s)**, Page I-14:
Add the following to **Subsection 10.25**:

(A) NYC TRANSIT GENERAL NOTES

For NYC TRANSIT notes see the contract drawings.

(B) NYC TRANSIT INSURANCE REQUIREMENTS

N.Y.C. TRANSIT INSURANCE: The Contractor (Permittee) shall indemnify and save harmless the City of New York and the New York City Transit (Permittor) in accordance with the following "Insurance Requirements" and proof that the necessary insurance is in effect will be required before work can commence:

NYCT "OUTSIDE CONTRACT" INSURANCE REQUIREMENTS

(1) The Permittee at its sole cost and expense shall carry or cause to carried and shall maintain at all times during the period of performance under this Agreement policies of insurance as herein below set forth below:

(A) Workers' Compensation Insurance - (including Employer's Liability Insurance) with limits as specified in Schedule "A", which limit may be met by a combination of primary and excess insurance meeting the statutory limits of New York State. The policy shall be endorsed to include Longshoreman's and Harbor Workers' Compensation Act/Maritime Coverage Endorsement and/or Jones Act Endorsement when applicable.

(B) Commercial General Liability Insurance - (I.S.O. 2001 Form or equivalent) approved by Permittor in the Permittee's name with limits of liability as specified in Schedule "A" for each occurrence on a combined single limit basis for injuries to persons (including death) and damages to property. The limits may be provided in the form of a primary policy or combination of primary and umbrella/excess policy. When the minimum contract amounts can only be met when applying the umbrella/excess policy; the Umbrella/Excess Policy must follow form of the underlying policy and be extended to "drop down" to become primary in the event primary limits are reduced or aggregate limits are exhausted. Such insurance shall be primary and non-contributory to any other valid and collectable insurance and must be exhausted before implicating any Permittor/MTA policy available.

Such policy should be written on an occurrence form; and shall include:

- Contractual coverage for liability assumed by the Permittee under this agreement;
- Personal and Advertising Injury Coverage;
- Products-Completed. Operations;
- Independent Contractors Coverage;
- "XCU" coverage (Explosion, Collapse, and Underground Hazards) where necessary;
- Contractual Liability Exclusion, applicable to construction or demolition operations to be performed within 50 feet of railroad tracks, must be voided, where necessary; and,
- Additional Insured Endorsement (I.S.O. Form CG 20 26 07/04 version or equivalent) approved the Permittor naming:

  New York City Transit Authority (NYCTA), the Manhattan and Bronx Surface Transit Operating Authority (MaBSTOA), the Staten Island Rapid Transit Operating Authority (SIRTOA), MTA Capital Construction Co., the Metropolitan Transportation Authority (MTA) including its subsidiaries and affiliates, and the City of New York (as Owner).

(C) Business Automobile Liability Insurance Policy - (I.S.O. Form CA 00 01 10 01 or equivalent) approved by the Permittor is required if Permittee's vehicle enters Permittor property. The insurance must be in the name of the Permittee or its contractor entering the Permittor property with limits of liability in the amount specified in Schedule "A" for claims for bodily injuries (including death) to persons and for damage to property arising out of the ownership, maintenance or use of any owned, hired or non-owned motor vehicle.

(D) Railroad Protective Liability Insurance policy shall be required as specified in Schedule "A".

(E) Environmental/Pollution Exposures:

In the event environmental or pollution exposures exist, the Permittee shall require the environmental contractor or sub-contractor to provide the applicable insurance covering such exposure. The limits and type of insurance provided shall be satisfactory to the Permittor and will be confirmed to the parties prior to the start of the work.

(2) General Requirements Applicable To Insurance Policies:

(a) All of the insurance required by this Article shall be with Companies licensed or authorized to do business in the State of New York with an A.M. Best Company rating of not less than A-/VII or better and reasonably approved by the Permittor/MTA and shall deliver evidence of such policies.

(b) Except for Workers Compensation, all references to forms and coverages referred to above shall be the most recent used by the Insurance Services Office, Inc. (ISO") or equivalent forms approved by the Insurance Department of the State of New York, provided, however, that excess coverages may be written on forms reasonably acceptable to Permittor containing provisions other than those contained in ISO forms but otherwise conforming in substance to the requirements of this Article.

(c) The Permittee or its Contractor performing the work shall furnish evidence of all policies before any work is started to the permittor:

For NYCT Contract Inspection
C/O Mr. John Malvasio
Director, MOW Engineering
130 Livingston Street, Room 8044F
Brooklyn, NY 11201
Telephone: (718) 694-1358

These policies must: (i) be written in accordance with the requirements of the paragraphs above, as applicable; (ii) be endorsed in form acceptable to include a provision that the policy will not be canceled, materially changed, or not renewed, unless otherwise indicated herein, at least thirty (30) days prior written notice to the Permittor c/o MTA Risk and Insurance Management (MTA RIM) Department - Standards, Enforcement & Claims Unit, 2 Broadway - 21st floor, New York, NY 10004; and (iii) state or be endorsed to provide that the coverage afforded under the contractor's policies shall apply on a primary and not on an excess or contributing basis with any policies which may be available to the Permittor/MTA, and also that the contractor's policies, primary and excess, must be exhausted before implicating any Permittor/MTA policy available. (iv) In addition, contractor's policies shall state or be endorsed to provide that, if a subcontractor's policy contains any provision that may adversely affect whether contractor's policies are primary and must be exhausted before implicating any Permittor/MTA policy available, contractor's and subcontractor's policies shall nevertheless be primary and must be exhausted before implicating any Permittor/MTA policy available. Except for Professional Liability, policies written on claims made basis are not acceptable. At least two (2) weeks prior to the expiration of the policies, contractor shall endeavor to provide evidence of renewal or replacement policies of insurance, with terms and limits no less favorable than the expiring policies. Except as otherwise indicated in the detailed coverage paragraphs below, self insured retentions and policy deductibles shall not exceed $100,000, unless such increased deductible or retention is approved by Permittor/MTA. The Permittee shall be responsible for all claim expense and loss payments within the deductible or self-insured retention. The insurance monetary limits required herein may be met through the combined use of the insured's primary and umbrella/excess policies.

(d) Certificates of Insurance may be supplied as evidence of policies of the above policies, except for Policy (D) Railroad Protective Liability Insurance Policy. However, if requested by the Permittor, the Permittee shall deliver to the Authority, within forty-five (45) days of be request, a copy of such policies, certified by the insurance carrier as being true and complete. The Railroad Protective Liability Insurance Policy must be provided in the form of the Original Policy. A detailed Insurance Binder may be provided, ACORD or Manuscript Form, pending issuance of the Original Policy. The Original Policy must be submitted to MTA RIM within thirty (30) days of the Binder Approval.

(e) If a Certificate of Insurance is submitted, it must: (1) be provided on the Permittor Certificate of Insurance Form or MTA Certificate of Insurance Form for Joint Agency Agreements; (2) be signed by an authorized representative of the insurance carrier or producer and notarized; {3)

disclose any deductible, self-insured retention, sub-limit, aggregate limit or any exclusions to the policy that materially change the coverage; (4) indicate the Additional Insureds and Named Insureds as required herein, along with a physical copy of the Additional Insured Endorsement (I.S.O. Form CG 20 26 07/04 version or equivalent), as applicable and the endorsement(s) must include policy number(s); (5) reference the Contract by number on the face of the certificate; and (6) expressly reference the inclusion of all required endorsements.

(f) The minimum amounts of insurance required in the detail description of policies (A), (B), (C), and (D) above shall not be construed to limit the extent of the Permittee's liability under this Agreement.

(g) If, at any time during the period of this Agreement, insurance as required is not in effect, or proof thereof is not provided to the Permittor, the Permittor shall have the options to: (i) direct the Permittee to suspend work or operation with no additional cost or extension of time due on account thereof; or (ii) treat such failure as an Event of Default.

(C) NYC TRANSIT CURRENT AND FUTURE PROJECTS

The Contractor is notified of the following:

(1) The following subway lines are within the area of this project:
(a) The **IND Rockaway A Train** is running along Rockaway Freeway.

(2) The Contactor can obtain NYC Transit Structural Drawings by contacting Mr. Chenthitta Gopalakrishnan at (646) 252-3614.

The Contractor shall also obtain from Mr. Chenthitta Gopalakrishnan the following Drawing showing Power Engineering Activities for the area of this project:

- Drawing No. P-637 - Duct Assignment - Vicinity of Straiton Avenue Station – Rockaway Line – IND - Queens
- Drawing No. P-638 – Duct Assignment – Vicinity of Frank Avenue Station – Rockaway Line – IND - Queens

(3) The project might have an impact at the following stations:
(a) Straiton Avenue – Beach 60th Street Station for the IND A Train – Rockaway Line
(b) Frank Avenue – Beach 44th Street Station for the IND A Train – Rockaway Line

Should it become necessary to close any of the entrances for the above station, see Note No. 14.35 from the General Notes that are made part of the contract drawings.

(4) (a) The following tables showing NYC Transit's current and planned projects that may impact and/or interfere with this project might require the Contractor to coordinate construction work with NYCT contractors. These tables are for information only:

Straiton Avenue – Beach 60th Street Station / Rockaway Line-IND / Queens

Contract	Project Title	Design Manager/ Telephone No.	Construction Manager/ Telephone No.	Resident Engineer/ Telephone No.
ST!2-7386 W32695	Public Address/Cust Info PA/CIS: 45 Stn: Cabinets	D. Wesley (646) 252-3061	J. L. Diaz (646) 790-2101	Undesignated
ST!2-7386 W32694	Public Address/Cust Info PA/CIS: 45 Stn: Cable	D. Wesley (646) 252-3061	J. L. Diaz (646) 790-2101	E. Kakknatt (646) 252-2070
MW49-5573 C34768	Elevated Structure Rehab VSR:RKY & FAR	L. Powerman (646) 252-4569	C. Velenovsky (718) 643-1954	D. Bishop (347) 672-0671

ST04-7247 A36124	Station Access ADA Induct Loops: 642 Bths	D. Devoti (646) 252-6785	M. V. Mathew (646) 252-9997	S. Stuart (646) 262-3577
ST07-5538 A36019	Station Rehab Rehab: Beach 6-St/FAR	V. Patel (646) 252-4249	S. Abraham (646) 252-4736	G. Farjam (646) 252-1090

Frank Avenue – Beach 44th Street Station/ Rockaway Line-IND / Queens

Contract	Project Title	Design Manager/ Telephone No.	Construction Manager/ Telephone No.	Resident Engineer/ Telephone No.
ST!2-7386 W32695	Public Address/Cust Info PA/CIS: 45 Stn: Cabinets	D. Wesley (646) 252-3061	J. L. Diaz (646) 790-2101	Undesignated
ST!2-7386 W32694	Public Address/Cust Info PA/CIS: 45 Stn: Cable	D. Wesley (646) 252-3061	J. L. Diaz (646) 790-2101	E. Kakknatt (646) 252-2070
MW49-5573 C34768	Elevated Structure Rehab VSR:RKY & FAR	L. Powerman (646) 252-4569	C. Velenovsky (718) 643-1954	D. Bishop (347) 672-0671
ST04-7247 A36124	Station Access ADA Induct Loops: 642 Bths	D. Devoti (646) 252-6785	M. V. Mathew (646) 252-9997	S. Stuart (646) 262-3577
ST07-5538 A36020	Station Rehab Rehab: Beach 6-St/FAR	V. Patel (646) 252-4249	S. Abraham (646) 252-4736	G. Farjam (646) 252-1090

(4) **Refer** to **Subsection 10.30 - Contractor To Provide For Traffic**, Page I-15:
Add the following to **Subsection 10.30**:

(1) Traffic Stipulations:

The Contractor shall refer to the Traffic Stipulations (five (5) pages) that are attached to the end of this addendum, and as directed by the Engineer.

(5) **Refer** to **Subsection 40.02.15 - Disposal Of Water From Trenches**, Page IV-9:
Add the following to **Subsection 40.02.15**:

(A) The Department of Design and Construction has **not** filed application for Dewatering Permit with the New York State Department of Conservation (NYSDEC), under the Environmental Conservation Law (ECL), Title 15 of Article 15, for a Temporary Well Point System Permit. However, it is anticipated that the criteria for rate of pumping specified herebefore in this section will be exceeded in areas of construction; the Contractor shall be responsible for applying and obtaining the necessary dewatering permit prior to the dewatering of trenches within the scope of this project.

As part of the permit application the Contractor will be required to comply with all the requirements of **Section 40.14** of this addendum.

Copies of all materials submitted to NYSDEC shall be sent to the New York City Department of Design and Construction (NYCDDC), Infrastructure/Design.

The following minimum requirements set forth by the New York Department of Environmental Conservation shall be complied with prior to the start of work in areas of construction requiring dewatering permit:

(1) An analysis must be made of water samples taken. The results are to be submitted to the Regional Permit Administrator. An analysis shall be made for BOD, salinity, oil, and grease. The samples shall be analyzed by a laboratory certified by the New York State Health Department and the results are to be submitted directed to the New York State Department of Environmental Conservation by the laboratory.

(2) Prior to setting any wells, wellpoints or header pipes, the Contractor shall submit to the NYSDEC a layout of the complete dewatering system including the location of the discharge point. When permitted by the NYSDEC, discharge of groundwater on the beach areas shall be done in such a manner as to eliminate any erosion or siltation and will require the installation of splash blocks and/or settling basins.

The Contractor is advised that all work required in obtaining a permit, must be submitted to, and approved by the NYSDEC prior to the commencement of any work in areas of construction requiring dewatering permit. No payment for any item of work will be made, and no shop drawing shall be approved for the areas of construction until such time that a written approval is obtained from the NYSDEC.

(B) The Contractor is advised that all work shall be governed by the provisions and requirements of the obtained permit, and their said provisions and requirements shall be made a part of the contract and the Contractor shall be responsible for strict adherence thereto.

The cost of all work required for applying, complying and obtaining required dewatering permits including the cost for any required updating of permits shall be deemed included in the prices bid for all item of this contract. No additional or separate payment will be made for any work required in order to comply with these requirements.

(6) **Refer** to Page IV-34:
Add the following new **Section 40.14**:

SECTION 40.14
DEWATERING PERMITS

40.14.1 DESCRIPTION

Under this contract, and at locations where groundwater will be present in the trenches and excavations, the Contractor is required to install, maintain and operate a temporary dewatering system of sufficient size and capacity to control ground and surface water flow into the excavation and to allow all work to be accomplished in the "dry condition".

The Contractor shall be required to obtain the following permits in order to operate a temporary dewatering system.

(A) A Dewatering/Discharge Permit from the New York City Department of Environmental Protection (NYCDEP);

(B) A Long Island Well Permit from the New York State Department of Environmental Conservation (NYSDEC), under the Environmental Conservation Law (ECL), Title 15 of Article 15, implemented by 6NYCRR Part 601 - Water Supply and Part 602 - Long Island Well. This permit is required only in the Boroughs of Brooklyn and Queens to withdraw water using a well point or deep well system where the total capacity of such well or wells is in excess of 45-gallons per minute (or 64,800-gallons per day); and,

(C) An Industrial State Pollutant Discharge Elimination System (SPDES) or a Non-Jurisdictional Determination Letter in compliance with Title 8 and 7 of Article 17 of the Environmental Conservation Law of New York State, respectively.

The Contractor is advised that the provisions and requirements of the aforementioned permits shall govern all work, and the said provisions and requirements are hereby made a part of the sewer contract and the Contractor shall be responsible for strict adherence thereto.

No dewatering work shall commence until the above-mentioned Permits have been obtained for this project.

The Contractor is advised that in order to comply with all the permits requirements, the Contractor will be required to submit maps, test data, etc. prior to the start of work. In order to expedite the processing of the permit and its requirements, the Contractor shall be required to obtain the services of an independent Environmental Scientist as herein described below in **Subsection 40.14.2** to perform this work and act as liaison with NYSDEC and NYCDEP.

40.14.2 QUALIFICATIONS

The Environmental Scientist utilized to perform the work required under this section must have adequate experience in work of this nature (obtaining Long Island Well Permit/Dewatering Permit) and must have previous experience in working with the NYSDEC and the NYCDEP, designing equivalent dewatering systems, and have successfully obtained the type of permits required under this contract. Prior to the start of work, the Contractor will be required to submit the name and resume of the Environmental Scientist for approval.

40.14.3 NYSDEC DEWATERING PERMITS

The dewatering system shall be designed by the Environmental Scientist using accepted and professional methods of design and engineering consistent with the best modern practices.

The material to be submitted shall include, but not be limited to the following:

(1) Site Plan - Scaled, showing construction activity (e.g. excavation, pathway of the pipe, new outfalls, etc.) locations of well points, header pipes and pumps, and all staging and storage areas.

Also included herein shall be a layout of the complete dewatering system including the location of the discharge point. When permitted by the NYSDEC, discharge of groundwater on beach areas shall be done in such a manner as to prevent any erosion or siltation and will require the design and installation of splash blocks and/or settling basins.

(2) Dewatering System Specifications:

(a) Number of Well Points
(b) Diameter of Well Points
(c) Spacing of Well Points
(d) Length to Screen
(e) Depth to Bottom of Screen
(f) Static Water Level
(g) Drawdown Required
(h) Total Volume Pumped
(i) Number of Pumps
(j) Capacity of Pumps
(k) Duration of Pumping
(l) Initial and Average GPM
(m) Estimated Daily Pumpage
(n) Flow Meter

(3) Cross Section - Scaled, showing well points, riser, header, annular material (if used) and other equipment associated with each point. A typical construction style drawing may be utilized. Should the Contractor be permitted to use a deep well system, all information regarding it must be submitted.

(4) Drawdown Contour Map - Based upon a review of the surrounding area affected by the dewatering and upon boring within the project area and characteristics of the soils, the depth and pumping rate of dewatering system and the duration of the pumping, the Environmental Scientist shall submit both a narrative and diagram showing the anticipated maximum cone of depression which shall be shown from both above and in cross section on scaled diagrams. Contour lines on diagrams shall be labeled to show depth from land surface.

(5) Description of Site and Adjacent Areas - A short narrative shall be prepared describing the land use in the area paying attention to any potential sources of groundwater contamination that may migrate into the well's cone of depression, such as gas stations, chemical plants, wrecking yards, sanitary landfills, etc. Latest map of the area shall be included in the narrative.

(6) Groundwater Analysis - The Environmental Scientist shall develop and submit a sampling and analysis program subject to NYSDEC Approval (a minimum of one groundwater sample from a site well shall be collected and analyzed). A laboratory certified by the New York State Health Department shall analyze the samples. The sampling and analysis program must include but is not limited to the following:

NYSDEC REGION 2 - DEWATERING PROJECTS SAMPLING INFORMATION

NO.	PARAMETERS	TYPE	EPA METHOD	DETECTION
1	pH	Grab	150.1	EPA min
2	Temperature	°F	After Pumping	EPA min
3	Fecal Coliform	Grab	5-Tubes/3-Dilutions	2-MPN/100-ml
4	Oil & Grease	Grab	413.1	EPA min
5	BOD_5	Grab	405.1	EPA min
6	Total Suspended Solids	Grab	160.2	EPA min
7	Settleable Solids	Grab	160.5	EPA min
8	Chlorides	Grab	325.1-325.3	EPA min
9	Benzene	Grab	602	EPA min
10	Toluene	Grab	602	EPA min
11	Xylenes	Grab	602	EPA min
12	Ethylbenzene	Grab	602	EPA min
13	PCB's	Grab	608	(See Note 1)
14	Pesticides	Grab	608	EPA min
15	13 Priority Metals	Grab	200 series	EPA min
16	Acids Base/Neutrals	Grab	625-GC/MS	EPA min
17	Halogenated Volatiles	Grab	601-GC	EPA min
18	Nitrate/Nitrite	Grab	300 or 353.3	EPA min
19	Aromatic Volatiles	Grab	602-GC	EPA min
20	Cyanide (total or amenable)	Grab	335.1/335.2	EPA min

NOTE:

(1) List each individual aroclor found and report the concentration of each aroclor tested. Use the N.Y.S. detection limit, which is 0.065-µg/l.

Small dewatering projects with a total estimated pumped volume up to 15-Million Gallons (MG) require sampling analysis for parameters No.'s 1 through 12.

Medium dewatering projects with a total estimated pumped volume between 15-MG and 60-MG require sampling analysis for parameters No.'s 1 through 14.

Large dewatering projects with a total estimated pumped volume greater than 60-MG require sampling analysis for parameters No.'s 1 through 20.

Samples are to be collected after development of the well by a licensed well driller.

A laboratory certified by the NYS Department of Health must conduct all testing.

Irrespective of the aforementioned sampling requirements based on total estimated pumped volumes, the Department may require sampling of additional parameters if the proposed dewatering site is suspected of being contaminated.

40.14.4 SUBMISSION OF DEWATERING PLAN

The Environmental Scientist will be required to submit two (2) copies of the Dewatering Plan (together with all reports, materials, designs, drawings, maps and plans) to the Infrastructure Engineering Support Unit for review and approval. Once approved the Environmental Scientist shall submit in triplicate the Final Dewatering Plan to both the NYSDEC and the NYCDEP. The Dewatering Plan should be bound and bear the name of the Contractor, NYSDEC Application Number and the Signature of the preparer. All drawings and maps shall be on sheets 27-inches by 40-inches and to scale not less than 1"=30'.

40.14.5 DAMAGES

The Contractor shall be responsible for and shall repair at no cost to the City any damage caused by inadequate or improper design and operation of the dewatering system, and any mechanical or electrical failure of the dewatering system.

40.14.6 SYSTEM REMOVAL

The Contractor shall remove all dewatering equipment and temporary electrical service from the site. All wells shall be removed or cut off a minimum of three (3) feet below the final ground surface and capped. Holes left from pulling wells or wells that are capped shall be grouted in a manner approved by the Engineer.

40.14.7 PAYMENTS

No additional or separate payment will be made for any work described herein. The costs for all labor, materials, equipment, permit fees, samples, tests, reports, services and insurance required or necessary to perform all the work described herein shall be deemed included in the price bid for all items of work.

(7) **Refer** to **Subsection 71.41.4 - Specific Pavement Restoration Provisions**, Page VII-67:
Add the following to **Subsection 71.41.4**:

(E) Specific Pavement Restoration Provisions:

(1) In Arverne Boulevard between Beach 59th Street and Beach 54th Street, the restoration shall be as follows:

(a) The permanent restoration over the **trench width and cutbacks only** shall consist of a top course of one and one-half (1-1/2) inches of binder mixture on a base course of a minimum of four and one-half (4-1/2) inches of binder mixture, or a top course of a minimum of three (3) inches of binder mixture on a base course of a minimum of six (6) inches of high-early strength concrete, to match the existing pavement as directed by the Engineer.

(b) Finally an overlay of two (2) inches of asphaltic concrete wearing course shall be installed over the entire width of the roadway from **curb to curb** or **edge to edge** of existing roadway.

(2) In Beach 67th Street between Rockaway Freeway and Rockaway Beach Boulevard, the restoration shall be as follows:

(a) The entire width of roadway shall be removed from **curb to curb** or **edge to edge** and the permanent restoration over the entire width of roadway shall consist of a minimum of six (6) inches of concrete base and three (3) inches of asphaltic concrete wearing course to match the existing grade as directed by the Engineer.

(3) In Rockaway Beach Boulevard between Beach 54th Street and Beach 49th Street, the street surface shall be temporarily restored as per the requirements of **Section 71.31**. Final restoration shall be accomplished and paid for in accordance with Highway Construction Plans, Details and Specifications for Highway Project ID. SANDHW12.

(4) The following requirements apply:

(a) Before the top course is installed, an additional width of asphalt beyond the edge of new base course shall be saw-cut and removed from all edges of trenches to a depth to accommodate the specified top course and the entire area restored. This additional removal shall be in accordance with paragraph (b) below.

(b) Pavement excavation along with saw cutting of pavements for sewer and water main trenches shall be in accordance with **Section 71.21 - Pavement Excavation** of the Standard Sewer And Water Main Specifications.

(c) At locations requiring the installation of a concrete base course, a reflective cracking membrane shall be installed over joints prior to restoration, the cost of which shall be deemed included in the prices bid for all pavement restoration items. Additionally, appropriate pavement keys as described below shall be used.

(d) Pavement keys **Type B-1** shall be used to insure a desired four (4) inch curb reveal (two and one-half (2-1/2) inch absolute minimum). Pavement key **Type A** shall be used in all intersections. Both keys are to be per Bureau of Highways Operations Specifications and Standard Details of Construction.

(e) Unless otherwise specified, the cost for Proctor analyses, in-place soil density tests, tack coating, eradication of temporary roadway markings, stripping or milling of pavement keys and adjustment of city-owned castings for all roadway work shall be deemed included in the prices bid for all pavement restoration items.

(f) Payment for placement of temporary pavement marking shall be made under Item No. 6.49 - TEMPORARY PAVEMENT MARKINGS (4" WIDE).

(g) Payment for removal of existing pavement markings shall be made under Item No. 6.53 - REMOVE EXISTING LANE MARKINGS (4"WIDE).

(h) Payment for placement of permanent pavement marking with thermoplastic reflectorized pavement markings (crosswalk and lane dividers) shall be made under Item No. 6.44 - THERMOPLASTIC REFLECTORIZED PAVEMENT MARKINGS (4" WIDE).

(i) Payment for pavement restoration shall be made under the following items:

Item No.	Item	Payment Description
4.02 AF-R	Asphaltic Concrete Wearing Course, 2" Thick	(For 2" asphaltic concrete wearing course overlay from curb to curb or edge to edge.)
4.02 AG	Asphaltic Concrete Wearing Course, 3" Thick	(For 3" asphaltic concrete wearing course for entire width of roadway restoration)
4.02 CA	Binder Mixture	(For binder mixture base course over trenches and cutbacks; binder mixture top filler course under asphaltic concrete wearing course when no overlay is

		required; binder mixture top course when overlay is required; binder mixture in Type A and B Keys; and binder mixture to fill in roadway depressions and to provide a leveling course prior to overlay where ordered.)
4.04AC	Concrete Base For Pavement 6" Thick, Class B-32	(For concrete base course for entire width of roadway restoration.)
4.04 H	Concrete Base For Pavement, Variable Thickness For Trench Restoration, (High-Early Strength)	(For concrete base course over trenches and cutbacks.)

D. AMENDMENTS TO THE SPECIFICATIONS FOR TRUNK MAIN WORK

1) Refer to **Part 1 – Furnishing And Delivering Steel Pipes And Appurtenances 30 Inches In Diameter And Larger, Paragraph 13. Special Fittings:**, Page 5;
Add the following to **Paragraph 13:**

The steel reducer shall have a length of seven (7) feet for every twelve (12) inches reduction in diameter.

END OF ADDENDUM NO. 2
This Addendum consists of eighteen (18) pages plus twenty-four (24) pages of attachments.

NEW YORK CITY DOT

Department of Transportation

POLLY TROTTENBERG, Commissioner

OCMC TRAFFIC STIPULATIONS

January 26, 2015

OCMC FILE NO: QEC 14-436
CONTRACT NO: QED1007
PROJECT: STORM, SANITARY SEWERS AND DISTRIBUTION WATERA MIANS

LOCATION(S): VARIOUS LOCATIONS

PERMISSION IS HEREBY GRANTED TO THE **CITY OF NEW YORK DEPARTMENT OF DESIGN AND CONSTRUCTION** AND ITS DULY AUTHORIZED AGENT, TO ENTER UPON AND RESTRICT THE FLOW OF TRAFFIC AT THE ABOVE LOCATION(S) FOR THE PURPOSE OF CARRYING OUT THE ABOVE NOTED PROJECT, SUBJECT TO THE STIPULATIONS, AS NOTED BELOW:

A. SPECIAL STIPULATIONS

1. **EMBARGOES** – A CONSTRUCTION EMBARGO WILL APPLY TO THOSE LOCATIONS BELOW WHICH FALL WITHIN THE **HOLIDAY EMBARGO** OR ANY OTHER SPECIAL EVENT EMBARGOES SUCH AS PUBLISHED BY THE BUREAU OF PERMIT MANAGEMENT AND CONSTRUCTION CONTROL.
2. **BIKE LANES** – IF WORK IS IN OR AFFECTING A BIKE LANE, THE PERMITTEE MUST POST ADVANCE WARNING SIGNS 350 FEET AND 200 FEET PRIOR TO THE WORK ZONE STATING **"CONSTRUCTION IN BIKE LANE AHEAD PROCEED WITH CAUTION"**, AND ALSO POST A SIGN AT THE WORK ZONE STATING **"CONSTRUCTION IN BIKE LANE PROCEED WITH CAUTION"**. SUCH SIGNS SHALL BE ORANGE, 3' X 3', DIAMOND-SHAPED WITH 4" BLACK LETTERING. SIGNS SHALL BE POSTED IN ACCORDANCE WITH THE FEDERAL MANUAL ON UNIFORM TRAFFIC CONTROL DEVICES (MUTCD).
3. **BIKE SHARE STATIONS:** THE PERMITTEE SHALL NOT REMOVE, RELOCATE, DAMAGE OR DISRUPT THE OPERATION OF EXISTING BIKE SHARE STATIONS WITHOUT FIRST CONTACTING NYC BIKE SHARE AT 855-245-3311 FOR THEIR REQUIREMENTS PRIOR TO COMMENCING WORK.
4. **BUS STOPS** – THE PERMITTEE SHALL PROVIDE WRITTEN NOTICE TO NYC DOT OCMC AND NEW YORK CITY TRANSIT (NYCT) A MINIMUM OF FIVE (5) WEEKS IN ADVANCE FOR LANE/STREET CLOSURES THAT AFFECT BUS ROUTES/BUS STOPS.
5. **STREET LIGHTS / TRAFFIC SIGNALS:** THE PERMITTEE SHALL NOT REMOVE OR RELOCATE EXISTING STREET LIGHTS OR TRAFFIC SIGNALS WITHOUT FIRST OBTAINING APPROVAL FROM NYCDOT STREET LIGHTING / TRAFFIC SIGNALS UNIT.
6. **TRAFFIC CAMERAS, DETECTION/COMMUNICATION EQUIPMENT:** IF AT ANY TIME DURING THE APPROVED WORK, THE PERMITTEE ENCOUNTERS TRAFFIC SURVEILLANCE CAMERAS, DETECTION EQUIPMENT OR ANY TYPE OF COMMUNICATION EQUIPMENT (WIRELESS OR HARD-WIRED) ON ANY NYC DOT FACILITY, THAT IS NOT INCLUDED ON THE DESIGN/BUILD DRAWINGS, THE PERMITTEE SHALL IMMEDIATELY NOTIFY NYC DOT TRAFFIC MANAGEMENT BY PHONE AT 718-433-3390 OR 718-433-3340 AND VIA EMAIL AT TMC@DOT.NYC.GOV AND AWAIT DIRECTION PRIOR TO CONTINUING WORK.
7. **METERS** – THE PERMITTEE SHALL NOT REMOVE OR RELOCATE PARKING METERS WITHOUT FIRST OBTAINING APPROVAL FROM NYCDOT PARKING METER DIVISION AT 718 – 894 – 8651.
8. **TEST PITS** – THE BELOW TRAFFIC STIPULATIONS DO NOT APPLY TO TEST PIT WORK RELATED TO THIS CONTRACT. WORK HOURS AND OTHER REQUIREMENTS FOR TEST PIT OPERATIONS MAY DIFFER FROM THE STIPULATIONS IDENTIFIED BELOW. THE PERMITTEE SHALL BE REQUIRED TO OBTAIN SEPARATE PERMITS RELATED TO TEST PITS.
9. **TEMPORARY PARKING REGULATIONS/PAVEMENT MARKINGS** – THE PERMITTEE IS REQUIRED TO INSTALL, MAINTAIN AND REMOVE ALL NECESSARY TEMPORARY PARKING AND REGULATORY SIGNS AND PAVEMENT MARKINGS, AND RESTORE THEIR ORIGINAL CONDITION PER NYC DOT STANDARDS, PRIOR TO EXPIRATION OF THEIR PERMITS. THE PERMITTEE OR AGENCY PERFORMING PUBLIC OUTREACH SHALL POST AND MAINTAIN ADVISORY SIGNS A MINIMUM OF 48 HOURS PRIOR TO CHANGING EXISTING PARKING REGULATION SIGNS TO APPROVED TEMPORARY CONSTRUCTION PARKING REGULATION SIGNS. THE ADVISORY SIGNS SHOULD BE POSTED ON ALL POLES AND DRIVE RAILS ON THE SEGMENT AFFECTED, INDICATING THE DATE OF THE CHANGE, THE NEW REGULATIONS AND A TELEPHONE NUMBER TO OBTAIN MORE INFORMATION.
10. **ACCESS TO ABUTTING PROPERTIES** – THE PERMITTEE SHALL COORDINATE ALL ACTIVITIES WITH ABUTTING PROPERTY OWNERS TO ENSURE ACCESS IS PROVIDED TO/FROM ENTRANCES/DRIVEWAYS AT ALL TIMES.
11. **AUTHORIZED PARKING** – PRIOR TO PERFORMING WORK WHICH IMPACTS AUTHORIZED PARKING, THE PERMITTEE SHALL SUBMIT IN WRITING, AND COPY OCMC-STREETS, A REQUEST TO OCCUPY SPACE CURRENTLY USED BY AUTHORIZED VEHICLES. APPROVAL MUST BE RECEIVED FROM AUTHORIZED PARKING PRIOR TO OCCUPYING THESE AREAS.

NYC Department of Transportation
Bureau of Permit Management and Construction Control
30-30 Thomson Avenue – 2nd Floor South
Long Island City, NY 11101
T: 212.839.9621 F: 718.391.3631
www.nyc.gov/dot

12. **NOTIFICATION** – THE PERMITTEE MUST AT LEAST TWO (2) WORKING DAYS BEFORE THE START OF CONSTRUCTION NOTIFY THE NYC FIRE DEPARTMENT, NYC POLICE DEPARTMENT, NYCEMS, LOCAL COMMUNITY BOARD, BOROUGH PRESIDENT'S OFFICE-CHIEF ENGINEER, NYCDOT OCMC OFFICE, AND ALL ABUTTING PROPERTY OWNERS.
13. **CONSTRUCTION INFORMATIONAL SIGNS** – THIS PROJECT REQUIRES A CONSTRUCTION PROJECT INFORMATIONAL SIGN (CPIS) IN ACCORDANCE WITH NYCDOT HIGHWAY RULE SECTION 2-02 (4) AND (5). CRITERIA AND A PROTOTYPE FOR THIS SIGN MAY BE FOUND ON THE NYCDOT WEBSITE AT:

HTTP://WWW.NYC.GOV/HTML/DOT/DOWNLOADS/PDF/DOT_CPIS_DIRECTIONS.PDF

14. **ENHANCED MITIGATIONS**
    - "NO STANDING ANYTIME-TEMPORARY CONSTRUCTION" SIGNS AND TEMPORARY PAVEMENT MARKINGS SHALL BE INSTALLED AND MAINTAINED AS WARRANTED BY THE MAINTENANCE AND PROTECTION OF TRAFFIC (MPT) REQUIRED TO FACILITATE TRAFFIC MOVEMENTS THROUGH THE WORK ZONE. ALL TEMPORARY SIGNS AND PAVEMENT MARKINGS SHALL BE REMOVED UPON COMPLETION OF THE PROJECT.
    - COMMUNITY OUTREACH SHALL BE PROVIDED FOR THE DURATION OF THE PROJECT.

B. MAINTENANCE AND PROTECTION OF TRAFFIC

ROCKAWAY BEACH BOULEVARD BETWEEN BEACH 48TH STREET AND BEACH 49TH STREET

- Work hours shall be as follows: 7:00 AM to 6:00 PM, Monday – Friday
- The contractor shall maintain two 10 foot travel lanes, one 10 foot lane in each direction during working hours.
- The contractor shall restore all travel lanes after working hours.
- The contractor shall maintain 5-foot clear sidewalk for pedestrians at all times
- Must coordinate with Fire Department and MTA Bus depot at all times.

INTERSECTION OF ROCKAWAY BEACH BOULEVARD AND BEACH 49th STREET

- Work hours shall be as follows: 8:00 AM to 5:00 PM, Monday – Friday
- The contractor shall maintain on Rockaway Beach Boulevard and Beach 49th Street two 10 foot travel lanes, one 10 foot lane in each direction during working hours.
- The contractor must restore full width of the roadway after working hours.
- The contractor shall maintain 5-foot clear sidewalk for pedestrians at all times.
- Must coordinate with Fire Department and MTA Bus depot at all times.

INTERSECTION OF ROCKAWAY BEACH BOULEVARD AND BEACH 48th STREET

- Work hours shall be as follows: 8:00 AM to 5:00 PM, Monday – Friday
- The contractor shall maintain on Rockaway Beach Boulevard two 10 foot travel lanes, one 10 foot lane in each direction and Beach 49th Street one 12 foot lane for local and emergency traffic during working hours.
- The contractor must restore full width of the roadway after working hours.
- The contractor shall maintain 5-foot clear sidewalk for pedestrians at all times.
- Must coordinate with Fire Department and MTA Bus depot at all times.

ROCKAWAY BEACH BOULEVARD BETWEEN BEACH 49TH STREET AND BEACH 50TH STREET
ROCKAWAY BEACH BOULEVARD BETWEEN BEACH 50TH STREET AND BEACH 52ND STREET
ROCKAWAY BEACH BOULEVARD BETWEEN BEACH 52ND STREET AND BEACH 53RD STREET
ROCKAWAY BEACH BOULEVARD BETWEEN BEACH 53RD STREET AND BEACH 54TH STREET
ROCKAWAY BEACH BOULEVARD BETWEEN BEACH 54TH STREET AND BEACH 56TH STREET

- Work hours shall be as follows: 7:00 AM to 6:00 PM, Monday – Friday
- The contractor shall maintain two 10 foot travel lanes, one 10 foot lane in each direction during working hours.
- The contractor shall restore all travel lanes after working hours.
- The contractor shall maintain 5-foot clear sidewalk for pedestrians at all times

INTERSECTION OF ROCKAWAY BEACH BOULEVARD AND BEACH 50TH STREET

- Work hours shall be as follows: 8:00 AM to 5:00 PM, Monday – Friday
- The contractor shall maintain on Rockaway Beach Boulevard and Beach 50th Street two 10 foot travel lanes, one 10 foot lane in each direction during working hours.
- The contractor must restore full width of the roadway after working hours.
- The contractor shall maintain 5-foot clear sidewalk for pedestrians at all times.
- Must coordinate with Fire Department and MTA Bus depot at all times.

INTERSECTION OF ROCKAWAY BEACH BOULEVARD AND BEACH 52ND STREET
INTERSECTION OF ROCKAWAY BEACH BOULEVARD AND BEACH 53RD STREET

- Work hours shall be as follows: 8:00 AM to 5:00 PM, Monday – Friday
- The contractor shall maintain on Rockaway Beach Boulevard two 10 foot travel lanes, one 10 foot lane in each direction and on all cross streets one 11 foot lane for 2 way through traffic with flaggers at each end of work zone during working hours.
- The contractor must restore full width of the roadway after working hours.
- The contractor shall maintain 5-foot clear sidewalk for pedestrians at all times.

INTERSECTION OF ROCKAWAY BEACH BOULEVARD/ARVERNE BOULEVARD AND BEACH 54th STREET

- Work hours shall be as follows: 8:00 AM to 5:00 PM, Monday – Friday
- The contractor shall maintain on Rockaway Beach Boulevard/Arverne Boulevard and Beach 54th Street two 10 foot travel lanes, one 10 foot lane in each direction during working hours.
- The contractor must restore full width of the roadway after working hours.
- The contractor shall maintain 5-foot clear sidewalk for pedestrians at all times.

ARVERNE BOULEVARD BETWEEN BEACH 56TH STREET AND BEACH 57TH STREET

- Work hours shall be as follows: **When school is open**: 9:00 AM to 2:00 PM, Monday thru Friday
  When school is closed: 7:00 AM to 6:00 PM, Monday thru Friday
- The contractor shall maintain two 10 foot travel lanes, one 10 foot lane in each direction during working hours.
- The contractor shall restore all travel lanes after working hours.
- The contractor shall maintain 5-foot clear sidewalk for pedestrians at all times

INTERSECTION OF ARVERNE BOULEVARD AND BEACH 56th STREET
INTERSECTION OF ARVERNE BOULEVARD AND BEACH 57TH STREET

- Work hours shall be as follows: **When school is open**: 9:00 AM to 2:00 PM, Monday thru Friday
  When school is closed: 8:00 AM to 5:00 PM, Monday thru Friday
- The contractor shall maintain on Arverne Boulevard and all cross streets two 10 foot travel lanes, one 10 foot lane in each direction during working hours.
- The contractor must restore full width of the roadway after working hours.
- The contractor shall maintain 5-foot clear sidewalk for pedestrians at all times.

ARVERNE BOULEVARD BETWEEN BEACH 57TH STREET AND BEACH 59TH STREET

- Work hours shall be as follows: 7:00 AM to 6:00 PM, Monday – Friday
- The contractor shall maintain two 10 foot travel lanes, one 10 foot lane in each direction during working hours.
- The contractor shall restore all travel lanes after working hours.
- The contractor shall maintain 5-foot clear sidewalk for pedestrians at all times

INTERSECTION OF ARVERNE BOULEVARD AND BEACH 59TH STREET

- Work hours shall be as follows: 8:00 AM to 5:00 PM, Monday – Friday
- The contractor shall maintain on Arverne Boulevard two 10 foot travel lanes, one 10 foot lane in each direction and on Beach 59th Street on one 12 foot travel lane during working hours.
- The contractor must restore full width of the roadway after working hours.
- The contractor shall maintain 5-foot clear sidewalk for pedestrians at all times.

BEACH 67TH STREET BETWEEN ROCKAWAY FREEWAY AND BOARDWALK

- Work hours shall be as follows: 7:00 AM to 6:00 PM, Monday – Friday
- The contractor shall maintain two 10 foot travel lanes, one 10 foot lane in each direction during working hours.
- The contractor shall restore all travel lanes after working hours.
- The contractor shall maintain 5-foot clear sidewalk for pedestrians at all times

INTERSECTION OF BEACH 67TH STREET AND ROCKAWAY FREEWAY

- Work hours shall be as follows: 8:00 AM to 5:00 PM, Monday – Friday
- The contractor shall maintain on Beach 67th Street two 10 foot travel lanes, one 10 foot lane in each direction and two 11 foot lanes, one 11 foot lane on each side of the existing center mall on Rockaway Freeway and Rockaway Beach Boulevard during working hours.
- The contractor must restore full width of the roadway after working hours.
- The contractor shall maintain 5-foot clear sidewalk for pedestrians at all times.

C. GENERAL NOTES

1. **THIS IS NOT A PERMIT.** THIS STIPULATION SHEET MUST BE SUBMITTED WITH ALL REQUESTS FOR PERMITS PERTAINING TO THE ABOVE CONTRACT AND PRESENT AT THE WORK SITE ALONG WITH ALL ACTIVE CONSTRUCTION PERMITS WHEN THE APPROVED WORK IS BEING PERFORMED.
2. THE CONTRACTOR MUST COMPLY WITH ALL CONSTRUCTION EMBARGOS ISSUED BY THE NYCDOT INCLUDING THE HOLIDAY EMBARGO.
3. THE CONTRACTOR SHALL COMPLY WITH ALL REQUIREMENTS OF THE NYCDOT SPECIAL EVENTS UNIT AS IDENTIFIED BELOW:

   A. STREET FAIRS / FESTIVALS
   - ALL EXCAVATIONS MUST BE PLATED WITH SKID RESISTANT PLATES.
   - PLATES MUST BE RECESSED AND FLUSH WITH PAVEMENT.
   - ALL PAVEMENT DEFECTS MUST BE CORRECTED WITHIN OR ADJACENT TO THE WORK ZONE.
   - THE CONTRACTOR IS RESPONSIBLE FOR ANY DEFECTS WITHIN THE IMMEDIATE VICINITY IF NYCDOT STREET & ARTERIAL MAINTENANCE CANNOT MAKE REPAIRS DUE TO PROJECT INTERFERENCE (AS DETERMINED BY NYCDOT).
   - ALL EQUIPMENT, TRAILERS AND MATERIAL STORAGE MUST BE REMOVED.

   B. RUNNING / WALKING / BIKING EVENTS
   - ALL EXCAVATIONS MUST BE BACKFILLED AND PAVED OR PLATES MUST BE RECESSED AND PAVED OVER FLUSH WITH PAVEMENT.
   - ALL PAVEMENT DEFECTS MUST BE CORRECTED WITHIN OR ADJACENT TO THE WORK ZONE.
   - THE CONTRACTOR IS RESPONSIBLE FOR ANY DEFECTS WITHIN THE IMMEDIATE VICINITY IF NYCDOT STREET & ARTERIAL MAINTENANCE CANNOT MAKE REPAIRS DUE TO PROJECT INTERFERENCE (AS DETERMINED BY NYCDOT).
   - ALL EQUIPMENT, TRAILERS AND MATERIAL STORAGE MUST BE REMOVED.

   C. PARADES
   - ALL EXCAVATIONS MUST BE BACKFILLED AND PAVED OR PLATES MUST BE RECESSED AND PAVED OVER FLUSH WITH PAVEMENT.
   - FORMATION AND DISPERSAL AREA PLATES MUST BE RECESSED AND FLUSH WITH PAVEMENT (PLATES MUST BE SKID RESISTANT).
   - ALL PAVEMENT DEFECTS MUST BE CORRECTED WITHIN OR ADJACENT TO THE WORK ZONE.
   - THE CONTRACTOR IS RESPONSIBLE FOR ANY DEFECTS WITHIN THE IMMEDIATE VICINITY IF NYCDOT STREET & ARTERIAL MAINTENANCE CANNOT MAKE REPAIRS DUE TO PROJECT INTERFERENCE (AS DETERMINED BY NYCDOT).
   - ALL EQUIPMENT, TRAILERS AND MATERIAL STORAGE MUST BE REMOVED.

   D. MAYORAL EVENTS
   - ALL EXCAVATIONS MUST BE BACKFILLED AND PAVED OR PLATES MUST BE RECESSED AND PAVED OVER FLUSH WITH PAVEMENT.
   - ALL PAVEMENT DEFECTS MUST BE CORRECTED WITHIN OR ADJACENT TO THE WORK ZONE.
   - THE CONTRACTOR IS RESPONSIBLE FOR ANY DEFECTS WITHIN THE IMMEDIATE VICINITY IF NYCDOT STREET & ARTERIAL MAINTENANCE CANNOT MAKE REPAIRS DUE TO PROJECT INTERFERENCE (AS DETERMINED BY NYCDOT).
   - ALL EQUIPMENT, TRAILERS AND MATERIAL STORAGE MUST BE REMOVED.
4. ALL RELOCATION WORK BY THE UTILITIES SUCH AS; CON EDISON, TELEPHONE, GAS AND CABLE COMPANIES SHALL PRECEDE THE CONTRACTORS' START OF WORK ON ALL AFFECTED ROADWAYS IN THE IMPACTED CONTRACT AREA.
5. THE CONTRACTOR IS ADVISED THAT OTHER CONTRACTORS MAY BE WORKING IN THE GENERAL AREA DURING THE TERM OF THIS STIPULATION. IN WHICH EVENT, THE CONTRACTOR MAY REQUIRE MODIFICATIONS BY THE OCMC-STREETS.
6. THE PERMITTEE IS NOT AUTHORIZED TO ENTER, OCCUPY OR USE ANY PUBLICLY-OWNED OR PRIVATELY OWNED, NON-PAVED, LANDSCAPE OR NON-LANDSCAPED LOCATION WITHOUT SPECIFIC WRITTEN PERMISSION. WHEN THE LOCATION IS WITHIN THE RIGHT-OF-WAY OF A LIMITED-ACCESS ARTERIAL HIGHWAY, WRITTEN APPROVAL FROM THE NYCDOT OCMC-HIGHWAYS IS REQUIRED. WHEN THE LOCATION IS WITHIN THE RIGHT-OF-WAY OF A PUBLIC STREET OR PUBLIC PARK, WRITTEN APPROVAL FROM THE NEW YORK CITY DEPARTMENT OF TRANSPORTATION OR NEW YORK CITY DEPARTMENT OF PARKS AND RECREATION IS REQUIRED. WHEN THE LOCATION IS WITHIN THE

RIGHT-OF-WAY OF ANY OTHER JURISDICTION SUCH AS PRIVATE PROPERTY, STATE, FEDERAL ETC., IT IS THE PERMITTEE'S RESPONSIBILITY TO DETERMINE THE PROPERTY OWNER AND OBTAIN THE WRITTEN APPROVAL.

7. THE PERMITTEE SHALL ADHERE TO THE NYCDOT BUREAU OF BRIDGES' SPECIAL PROVISIONS FOR LANDSCAPE PROTECTION, MAINTENANCE AND RESTORATION, ITEMS 1.18.15 THROUGH 1.18.19, WHENEVER AND WHEREVER ANY OF THE PERMITTEE'S ACTIVITIES OCCUR WITHIN A LIMITED ACCESS ARTERIAL HIGHWAY RIGHT - OF - WAY.
8. NO DEVIATION OR DEPARTURE FROM THESE STIPULATIONS WILL BE PERMITTED WITHOUT THE PRIOR WRITTEN APPROVAL FROM THE OCMC-STREETS. REQUEST FOR SUCH MODIFICATIONS SHALL BE SUBMITTED TO THE OFFICE OF THE OCMC-STREETS, NEW YORK CITY DEPARTMENT OF TRANSPORTATION, A MINIMUM OF TWENTY (20) DAYS IN ADVANCE FOR CONSIDERATION.
9. FOR ANY CONSTRUCTION ACTIVITY RESULTING IN THE FULL CLOSURE OF A ROADWAY FOR MORE THAN 180 CONSECUTIVE CALENDAR DAYS, THE CONTRACTOR MUST PRODUCE AND SUBMIT A COMMUNITY REASSESSMENT, IMPACT AND AMELIORATION (CRIA) STATEMENT TO NYCDOT PLANNING AND OBTAIN THEIR APPROVAL BEFORE APPLYING FOR PERMITS, IN COMPLIANCE WITH THE PROVISIONS OF **LOCAL LAW 24 STREET CLOSURE LAW.**
10. FOR THIS PROJECT THE CONTRACTOR SHALL FURNISH, INSTALL AND MAINTAIN ALL NECESSARY ADVANCE WARNING AND DETOUR SIGNS, TEMPORARY CONTROL DEVICES, BARRICADES, LIGHTS AND FLASHING ARROW BOARDS IN ACCORDANCE WITH THE "MANUAL ON UNIFORM TRAFFIC CONTROL DEVICES," THE TYPICAL SCHEMES INCLUDED IN THIS SPECIFICATION; AND AS ORDERED BY THE ENGINEER-IN-CHARGE AND THE OCMC-STREETS.
11. THE CONTRACTOR SHALL BE RESPONSIBLE FOR IDENTIFYING HIS CONSTRUCTION SIGNAGE. THE IDENTIFICATION SHALL INCLUDE THE CONTRACTOR'S NAME, SPONSORING AGENCY NAME AND THE CONTRACT NUMBER. THE IDENTIFICATION SHALL BE PLACED ON THE BACK OF THE SIGN. THE LETTERING SHALL BE THREE (3) INCHES HIGH.
12. THE OCMC-STREETS RESERVES THE RIGHT TO VOID OR MODIFY THESE STIPULATIONS SHOULD CONSTRUCTION FAIL TO COMMENCE WITHIN TWO (2) YEARS OF THE SIGNED DATE OF THESE STIPULATIONS.

NICOLAS DAGHER, P.E.
EXECUTIVE DIRECTOR
OCMC

XIOMARA AGUILERA
PROJECT MANAGER
OCMC-STREETS

NYC DDC QED1007 – Task Order 020
CP System Survey and Engineering Study of Soils and Stray Currents Cathodic Protection System Design

Prepared For:

NYC Department of Design and Construction
30-30 Thomson Ave
Long Island City, NY 11101

Prepared By:

CorrTech, Inc.
25 South Street
Hopkinton, MA 01748
CorrTech, Inc. Design Submittal 8026 - 2942
NYC DDC Task Order 020

January 2015

STATEMENT OF LIMITATION

The conclusions presented in this document are based on the services described and not on tasks or procedures beyond the scope of the described procedures or the time and budgetary constraints imposed by the contract limitations.

CorrTech, Inc. has performed this assessment in a professional manner using that degree of skill and care exercised for similar projects under similar conditions by reputable and competent consultants, and in accordance with the procedures established within CorrTech's quality assurance, quality control protocol.

CorrTech, Inc. shall not be responsible for conditions or consequences arising from relevant facts that were concealed, withheld or not fully disclosed at the time the evaluation were performed.

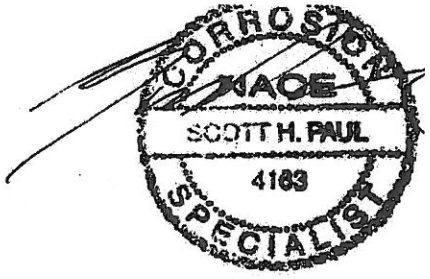

Report Reviewed by:
Scott Paul, P.E.
NACE Corrosion Specialist No. 4163
January 2015

Report Written by:
James Davis
Civil Engineer
January 2015

Table of Contents

INTRODUCTION 1

CONCLUSION 1

RECOMMENDATIONS 3

DISCUSSION 4

APPENDIX I

Soil Resistivity and Stray Current Test Results

APPENDIX II

Cathodic Protection Design Worksheet, 3 Segment

APPENDIX III

Cathodic Protection Design Drawings

INTRODUCTION

On June 28th, 2011, CorrTech, Inc. entered into agreement with the NYC Department of Design and Construction with the expectation of providing cathodic protection design, construction support, field testing, final system testing and as-built documentation. The QED1007 project is located in Queens, New York on Rockaway Beach Boulevard and Arverne Boulevard between Beach 59th Street and Beach 49th Street. It is estimated that approximately 3,400 linear feet of 36" Steel Water Main and associated fittings are to be installed under this contract. This pipe, isolated at either end, will be protected by a cathodic protection system designed by CorrTech. Work is being completed under CorrTech, Inc. Job No. 8026 and issued under contract GEDRC001, registration number 20121401831 as task order 20.

Field testing was performed on October 30th, 2014 in order to obtain soil resistivity data and to perform stray current monitoring in the approximate areas in which the new steel water main is being installed. During this visit, testing was completed on Arverne Boulevard and Rockaway Beach Boulevard in specific areas associated with the route of the pipe. Data collected will be used to design the sacrificial cathodic protection system. In addition to the field testing, a cursory review of area utilities was completed.

CorrTech, Inc. provides corrosion engineering expertise in accordance with specifications section 5.04A. Furnishing, installing and testing corrosion control and/or cathodic protection System was done in accordance with New York City Department of Environmental Protection (NYCDEP) "Specifications for Trunk Main Work".[1]

CONCLUSION

Based on the field testing protocol and test results obtained during the system evaluation and energization, the following conclusions are presented:

1. There is not an insulating flange at the eastern connection to existing pipe on Arverne Boulevard at Beach 49th Street.

2. There is no insulation flange on Beach 67th Street where the 36-inch main connects to existing main at Beach Channel drive.

3. There is no insulation flange where the 36-inch water main on Beach 67th Street connects to existing main that runs south down Rockaway Beach Blvd.

4. The average soil resistivity measured along the construction route was found to be approximately 30,000 Ω-cm. Readings obtained ranged from 22,000 Ω-cm to 40,000 Ω-cm. The soil resistivity study indicates that the area soils are classified as progressively less corrosive to metallic structures. Steel piping installed in this area will require

[1] This publication includes "Special Provisions for Trunk Main Work"; and "Specification for Furnishing, Delivering and Laying Steel Pipe and Appurtenances".

corrosion control measures that will include a bonded external dielectric coating system and sacrificial anode cathodic protection that will provide adequate corrosion control for in access of 50 years.

5. Stray current effects measured along the construction route are considered insignificant. The magnitude of variations observed, clearly does not indicate the existence of dynamic stray DC voltage effects.

RECOMMENDATIONS

While the soils in the area are considered mildly corrosive, the minimum life expectancy of 50 years must be considered. The evaluation suggests that newly installed steel pipe should be installed with an external coating system, electrical isolation and sacrificial anode type cathodic protection system. The following are requirements:

1. Install an insulating flange and vault at the eastern connection to existing pipe, Rockaway Beach Boulevard at Beach 49th Street. This has been included on the CorrTech design sheet CP-3.

2. Install an insulating flange and vault on Beach 67th Street where the 36-inch main connects to existing main at Beach Channel drive. This has been included on the CorrTech design sheet CP-4.

3. Install an insulating flange and vault before the 36-inch water main on Beach 67th Street connects to existing main that runs south down Rockaway Beach Blvd. This has been included on the CorrTech design sheet CP-4.

4. Insulating flanges must be installed at all butterfly valve chambers and at any/all ductile iron or cast iron main connections. Flange isolation assemblies are required where the new steel pipe connects to existing piping as well.

5. The new steel piping must have a high quality dielectric coating, such as the Polyken YGIII coating system, for any and all steel pipe surfaces that are in contact with the surrounding soil environment. The dielectric coating system should be applied to all piping associated with the air cock hydrants and blow-off assemblies.

6. Sacrificial magnesium anodes, permanent reference electrodes, pipe test wires, steel counter electrodes and flush-to-grade test stations at the locations indicated on the design drawings must be installed. All test stations must be installed on the inside of nearby curbs in order to prevent the enclosures from being subject to vehicular traffic and to make them easier to locate for future testing.

7. FRP shields must be installed around the pipe at any/all points of contact with reinforced concrete piles or similar structures. Electrical isolation between the new steel piping and other structures is of critical importance.

8. Final testing shall be performed by CorrTech personnel in concert with the REI team. Testing must verify that the installed cathodic protection system meets the criteria set forth by NACE International Recommended Practices SP0169, which requires control of external corrosion on underground or submerged metallic piping systems at all locations.

DISCUSSION

The coated steel water main piping associated with Project QED1007 consists of 36-inch welded steel water main. Testing was completed in and around Rockaway Beach Boulevard.

The purpose of the pre-constructing testing and subsequent evaluation is to quantify the levels of stray traction DC currents and to evaluate the area soil resistivity along the proposed construction route. After testing, no significant stray current effects were located. Stray current testing was performed at locations in and around the area where the new pipe will be installed.

A reference cell-to-reference cell potential profile obtained in the area indicates that potential variations are considered insignificant as well. The potential measurements obtained indicated variations of 0.008-volts or less. The proposed area of construction for the new steel water main being installed as part of QED1007 will not be subjected to adverse effects from stray traction DC currents.

Soil resistivity measurements were obtained at five (5) locations using a Collins Rod and Whetstone Soil Bridge. Depths obtained ranged from 3-feet to 4-feet. The data obtained is shown in Appendix I of this report. Soil resistivity ranged from a low of 22K Ω-cm to a high of 40K Ω-cm. The mean soil resistivity is approximately 30K Ω-cm. This is a reasonable representation of the average soil resistivity in this area.

The measurement of soil resistivity has been used for years as an indicator of the corrosivity of soil. Soil resistivity is the reciprocal of conductivity; the lower the resistivity, the easier current flows through the soil. Of the measurable soil characteristics, resistivity is generally accepted as the primary indicator of soil corrosivity. Resistivity is a property of the bulk volume of soil and electrolytes.

Although no universal standard has been accepted, (by an organization such as the American Society for Testing and Materials or the National Association of Corrosion Engineers), it is generally agreed that the classification shown below, or other similar classifications, reflect soil corrosivity.

Resistivity (Ohm-Cm)	Classification
< 1,000	Extremely Corrosive
1,000 to 3,000	Highly Corrosive
3,000 to 5,000	Corrosive
5,000 to 10,000	Moderately Corrosive
10,000 to 25,000	Mildly Corrosive
> 25,000	Progressively Less Corrosive

The above table provides qualitative insight to the expected corrosion exposure of a metallic structure in an environment of known resistivity. Accordingly, deterioration can generally be expected to be rapid and relatively severe in soils below 1,000 ohm-cm. This does not mean, however, that severe corrosion will not occur in soils of higher resistivity. In fact, depending on chemical

conditions, severe corrosion can occur in soils above 25,000 ohm-cm. The table only indicates that the latter occurrence is generally not observed.

The review of the plans for the new steel water main indicates that there are multiple ties to existing structures. The installation of insulating flanges is required for any/all tie-ins to the existing water supply network, as well as any butterfly valve connections and at any/all ductile iron or cast iron distribution tie-in points. The installation of electrical isolation flange assemblies produces a more concise, manageable cathodic protection system. CorrTech recommends the installation of an insulating flange and vault at the eastern connection to existing pipe, Arverne Boulevard at Beach 49th Street. This has been included on the CorrTech design sheet CP-3.

The cathodic protection design created by CorrTech, Inc. assumes that the piping will be electrically isolated and provided with a high quality dielectric coating system, (such as the Polyken YGIII coating system) and installed on all steel piping in contact with the soil environment. The piping associated with air cock hydrants and blow-offs should be layered with this coating system as well as electrically isolated from the steel trunk water main. There will be a total of one (1) distinct segment associated with the QED1007 project installation relative to cathodic protection. Please refer to Appendix II for the associated Ground Bed Design Worksheets.

The following NYC DEP cathodic protection design criteria have been applied to facilitate the final design calculations:

- Percent of bare pipe 1.00%.
- Required current density 1.25 mA/Ft^2.
- Pipe coating quality 25,000 ohm-cm
- 50-year design life for the cathodic protection anodes
- Anode consumption rate of 17-pounds per ampere-year
- 50% anode consumption utilization factor

The magnesium anodes will be divided into groups and these groups will be distributed along the piping segments. Installing the anodes in individual groups enables better current distribution in each segment and will provide multiple ground beds as backup in the event of damage to one groundbed.

The cathodic protection design has been prepared in accordance with NACE SP0169. NACE Standard Practice SP0169 (formerly RP0169), "Control of External Corrosion on Underground or Submerged Metallic Piping Systems". This standard practice presents procedures and practices for achieving effective control of external corrosion on buried or submerged metallic piping systems.

These recommendations are also applicable to many other buried or submerged metallic structures. They are intended for use by corrosion control personnel concerned with the corrosion of buried or submerged piping systems, including oil, gas, water, and similar

structures. This standard describes the use of electrically insulating coatings, electrical isolation, and cathodic protection as external corrosion control methods. The standard contains specific provisions for the application of cathodic protection to existing bare, existing coated and to new piping systems. Also included are procedures for control of interference currents on pipelines.

Sacrificial anode cathodic protection provides protection with no external power source or rectifier. Sacrificial anodes are designed to corrode, thereby protecting the steel structure being installed. Energy for the sacrificial anode system is provided by the difference in the electrochemical level between the anode and the structure being protected. Typically, magnesium anodes are utilized to protect steel structures. Referring to the galvanic series chart under the section on galvanic corrosion, it is indicated that the magnesium anode will corrode preferentially when connected to steel as part of a cathodic protection system. This is due to the fact that it sits at a higher electrochemical level.

A sacrificial anode installation is also a DC circuit with positive current supplied by the anodes and a return negative current supplied from the structure. The driving voltage of the sacrificial anode circuits is approximately 1.0 volt, the difference between magnesium and steel.

Ohm's Law (E=IR) is valid for DC circuits, where E is the driving voltage, or rectifier output, of the circuit, I is the resulting current magnitude and R is the resistance of the circuit. Proper system design seeks to minimize the resistance of the circuit through the use of an anode ground bed design. Sacrificial anode systems do not provide as much energy output as the impressed current design and therefore do not function properly in some applications where cathodic protection is required. Sacrificial systems require that the structure is first coated with a tightly adhered coating system and is also electrically isolated from all other metallic structures and system components. It is important to understand that pipe coating alone is not sufficient to provide complete corrosion control. Coatings must be supplemented with cathodic protection.[2]

NACE requirements specify that the cathodic protection of buried steel structures must be evidenced by two criteria. Firstly, adequate steel polarization is needed to ensure that the electrochemical processes have been established in order to arrest corrosion of the steel surface. Secondly, the cathodic protection design should be constructed and implemented in order to allow for field-testing protocol. Protection levels with respect to polarization criteria can then be verified. All testing is performed in order to demonstrate that adequate cathodic polarization exists on the protected structure. Polarization criteria must take into account any significant drop in the field measurements conducted. This is important both to satisfy the regulations as well as to ensure the preservation of pipe integrity. The primary focus of testing protocol and system design is to ensure that corrosion of any exposed steel has been mitigated.

Sacrificial anode design utilizes a number of electrical parameters as input to the CorrTech, Inc. design calculation worksheet. The calculation worksheets for each piping segment is included in this report as Appendix II.

---

[2] However, as defined in Sections 4 and 5 of NACE RP0169, cathodic protection can be provided to uncoated structures under certain conditions.

The following NYC DEP cathodic protection design criteria was applied to facilitate the final design calculations:

- Percent of bare pipe 1.00%.
- Required current density 1.25 mA/Ft².
- Pipe coating quality 25,000 ohm-cm
- 50-year design life for the cathodic protection anodes
- Anode consumption rate of 17-pounds per ampere-year
- 50% anode consumption utilization factor

In addition to the soil resistivity data, pipe geometry and anode dimensions and weight, the above design criteria are inputs to the design. The anode-to-remote earth resistance calculation is based on Dwight's Equation for a single horizontal anode.

$$R = \left(\frac{0.00521\rho}{L}\right)\left(\ln\left(\frac{4L^2 + 4L\sqrt{s^2 + L^2}}{dS}\right) + \frac{S}{L} - \frac{\sqrt{S^2 + L^2}}{L} - 1\right)$$

Where
R = resistance in ohms
L = anode length in feet
S = twice the depth of anode in feet
d = anode diameter in feet
ρ = resistivity in ohm-cm
ln is the natural logarithm function

This calculation provides the resistance for one (1) anode set in the measured average soil resistivity. The resistance to ground of the pipe is also calculated in the worksheet. Both the theoretical current requirement based on 1.25 mA/Ft² applied to the 2.00% of bare steel pipe and the circuit resistance of the pipe and anodes are calculated in the worksheet. The number of anodes to be installed is a variable input in the worksheet that determines total anode circuit resistance based on parallel resistance theory. The check in the design calculation worksheet indicates that the comparison of theoretical current compared to the field-tested circuit resistance, (as determined by the number of anodes to be installed), is between 0 and 25% and is in agreement.

The final total anode current output value is used to calculate the life of the anode system based on the magnesium anode consumption rate and 50% utilization. The life expectancy of anodes on these cathodically protected piping segments is in excess of 100 years.

Appendix I

Soil Resistivity and Stray Current Test Results

CorrTech, Inc

Soil Resistivity

Client: NY DDC - Task Order 020 Job Number: 8026

Project: QED 1007 Rockaway Beach Date: 10/30/2014

Location	Resistivity (ohm-cm^2)	Description	Soil Type
1	22,000	Beach 59th and Arvene Blvd In Grass	Grass
2	35,000	Beach 54th and Arvene Blvd In Median	Soil
3	40,000	Beach 53rd and Rockaway Blvd In Grass	Grass
4	30,000	Beach 50th and Rockaway Blvd In Grass	Grass
5	23,000	Beach 49th and Rockaway Blvd In Soil	Soil
AVG.	**30,000**	**(ohm-cm^2)**	

QED1007 - Task Order 020 - Rockaway Beach Blvd/Beach 54th St

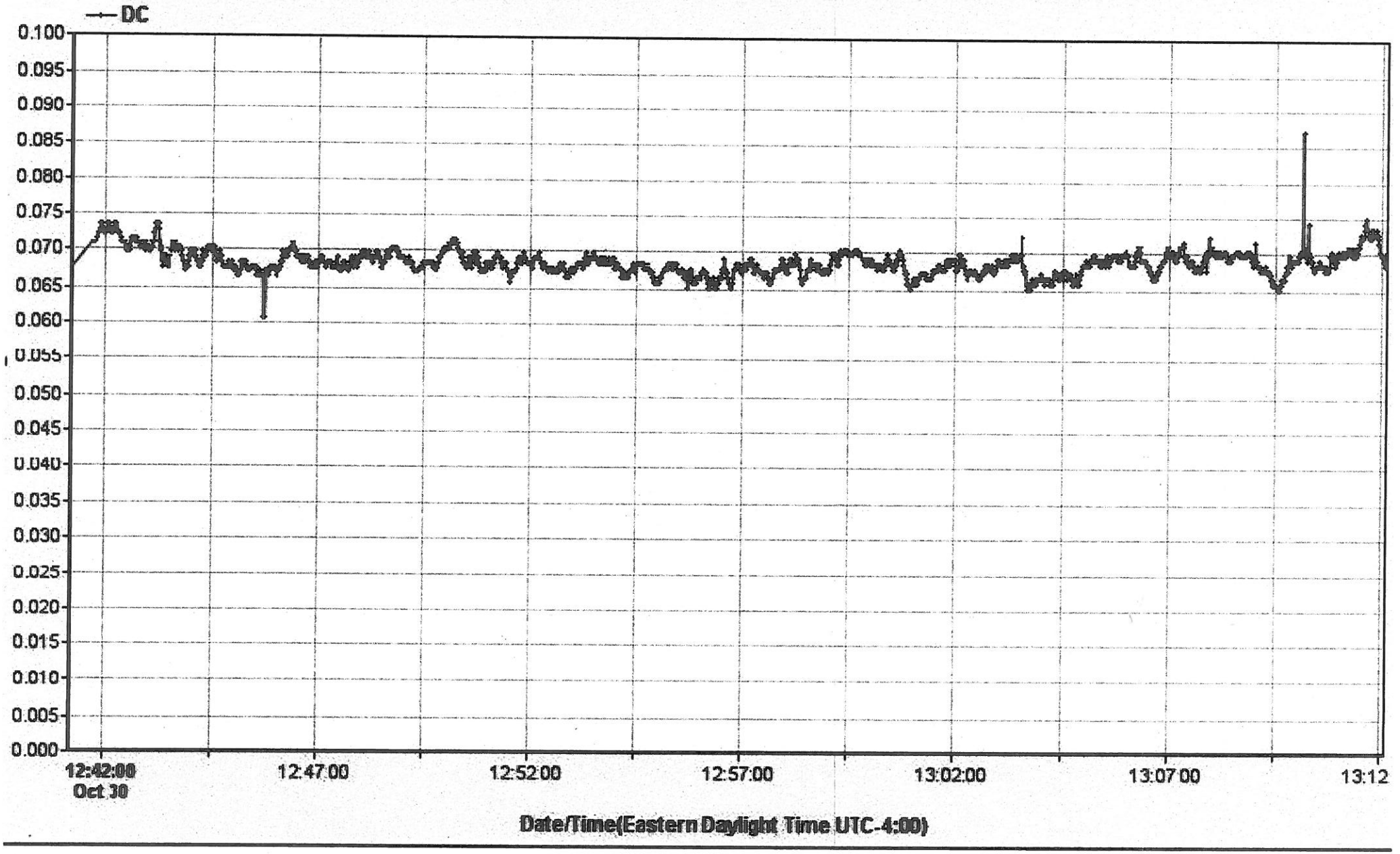

Appendix II

Cathodic Protection Design Worksheet, 3 Segment

CORRTECH INC

PIPE BREAK DOWN

Client: NY DDC

Project: QED1007 - TASK ORDER 020

Job Number: 8026

Date: 1/14/2015

Shaft No.	Drawing	Contract	Location	48-inch Pipe Length (ft)	36-inch Pipe Length (ft)	Gnd beds	Anodes	Ref. Cells	Rebar
SEGMENT 1	QED1007 - CP-1 QED1007 - CP-2 QED1007 - CP-3	QED1007	ARVERNE BLVD/ROCKAWAY BEACH BLVD BETWEEN BEACH 57TH ST AND BEACH 49TH ST	0	2604	4	100	4	4
SEGMENT 2	QED1007 - CP-4	QED1007	ROCKAWAY BEACH FREEWAY AT BEACH 67TH ST	0	494	1	20	1	1
SEGMENT 3	QED1007 - CP-4	QED1007	ROCKAWAY BEACH FREEWAY AT BEACH 67TH ST	0	143	1	10	1	1
			TOTALS	0	3241	6	130	6	6

CorrTech Inc., Groundbed Design Worksheet
NYC DDC Water Trunk Main Cathodic Protection

Client:	NYC DDC	Project:	QED1007
Date:	1/8/2015	Description:	36-INCH STEEL WATER MAIN
Segment:	1	Location:	ARVERNE/ROCKAWAY BEACH BLVD

Structure Calculations	ENTER		SURFACE AREA
Length of pipe	**2,604**	ft	24,530 ft2
Diameter	**3**	ft	
Length of Ppipe	**0**	ft	0 ft2
Diameter	**0**	ft	
			24,530 ft2

Circuit Calculations			
Soil Resistivity (ohm-cm)	**30,000**	(ohm-cm)	
Coating Quality (% bare)	1.00%	(% bare)	
Pipe Surface requiring protection	245.30	(ft2)	
Pipe electrically isloated (yes/no)	yes		
Coating quality OHM-FT2	25000	(ohm-ft2)	
Pipe to Earth Resistance	1.02	(ohm)	
Theoretical Current Required (ma/ft2)	1.25	(mA/ft2)	
Theoretical Current Requirements	0.3066	(amps)	0.2944

Anode Parameters		**Individual anode resistance:**
Anode Type	Magnesium anode, prepackaged	20.11 (square of S2+L2 factor)
Anode Weight (lbs)	**17**	74.88 (resistivity x .0052 factor)
Anode Diameter (feet)	**0.31**	1.47 (log value)
Anode Length (feet)	**2.08**	**174.59 Horozontal anode resistance**
2 time anode depth (feet)	**20**	**222.55 Vertical anode resistance**

Circuit Resistance Current Requirements (plug in Resistance value)				
Anode Resistance to Earth	**174.59**	OHMS		
Driving Potential (v)	**0.85**	VOLTS		
Individual anode output	0.005	AMPS	**Check**	**Between 0% and 25%**
Number of anodes to be installed	**100**	ANODES	-0.26%	**Yes**
Total circuit resistance	2.77	OHMS		
Current output of system	0.3074	AMPS		
Consumption Rate (lb/A-yr)	**17.00**	LB/A-YR		

Anode life based on anodes to be installed **162.65 YEARS** (considers 50% anode efficiency)

CORROSION NACE SCOTT H. PAUL 4183 SPECIALIST

Design conforms to the following standards:
National Association of Corrosion Engineers (NACE)
Standard Recommended Practice SP 0169 latest revision

CorrTech Inc., Groundbed Design Worksheet
NYC DDC Water Trunk Main Cathodic Protection

Client: NYC DDC Project: QED1007
Date: 1/8/2015 Description: 36-INCH STEEL WATER MAIN
Segment: 2 Location: BEACH 67TH STREET

Structure Calculations	ENTER		SURFACE AREA
Length of pipe	**494**	ft	4,653 ft2
Diameter	**3**	ft	
Length of Ppipe	**0**	ft	0 ft2
Diameter	**0**	ft	
			4,653 ft2

Circuit Calculations			
Soil Resistivity (ohm-cm)	**30,000**	(ohm-cm)	
Coating Quality (% bare)	1.00%	(% bare)	
Pipe Surface requiring protection	46.53	(ft2)	
Pipe electrically isloated (yes/no)	yes		
Coating quality OHM-FT2	25000	(ohm-ft2)	
Pipe to Earth Resistance	5.37	(ohm)	
Theoretical Current Required (ma/ft2)	1.25	(mA/ft2)	
Theoretical Current Requirements	0.0582	(amps)	0.0558

Anode Parameters		**Individual anode resistance:**
Anode Type	Magnesium anode, prepackaged	20.11 (square of S2+L2 factor)
Anode Weight (lbs)	**17**	74.88 (resistivity x .0052 factor)
Anode Diameter (feet)	**0.31**	1.47 (log value)
Anode Length (feet)	**2.08**	**174.59 Horozontal anode resistance**
2 time anode depth (feet)	**20**	**222.55 Vertical anode resistance**

Circuit Resistance Current Requirements (plug in Resistance value)

Anode Resistance to Earth	**174.59**	OHMS		
Driving Potential (v)	**0.85**	VOLTS		
Individual anode output	0.005	AMPS	**Check**	**Between 0% and 25%**
Number of anodes to be installed	**20**	ANODES	-3.62%	Yes
Total circuit resistance	14.10	OHMS		
Current output of system	0.0603	AMPS		
Consumption Rate (lb/A-yr)	**17.00**	LB/A-YR		

Anode life based on anodes to be installed **165.90 YEARS** (considers 50% anode efficiency)

CORROSION NACE SCOTT H. PAUL 4163 SPECIALIST

Design conforms to the following standards:
National Association of Corrosion Engineers (NACE)
Standard Recommended Practice SP 0169 latest revision

CorrTech Inc., Groundbed Design Worksheet
NYC DDC Water Trunk Main Cathodic Protection

Client:	NYC DDC	Project:	QED1007
Date:	1/8/2015	Description:	36-INCH STEEL WATER MAIN
Segment:	3	Location:	BEACH 67TH STREET

Structure Calculations	ENTER		SURFACE AREA
Length of pipe	**143**	ft	1,347 ft2
Diameter	**3**	ft	
Length of Ppipe	**0**	ft	0 ft2
Diameter	**0**	ft	
			1,347 ft2

Circuit Calculations			
Soil Resistivity (ohm-cm)	**30,000**	(ohm-cm)	
Coating Quality (% bare)	1.00%	(% bare)	
Pipe Surface requiring protection	13.47	(ft2)	
Pipe electrically isloated (yes/no)	yes		
Coating quality CM-FT2	25000	(ohm-ft2)	
Pipe to Earth resistance	18.56	(ohm)	
Theoretical Current Required (ma/ft2)	1.25	(mA/ft2)	
Theoretical Current Requirements	0.0168	(amps)	0.0162

Anode Parameters		**Individual anode resistance:**
Anode Type	Magnesium anode, prepackaged	20.11 (square of S2+L2 factor)
Anode Weight (lbs)	**17**	74.88 (resistivity x .0052 factor)
Anode Diameter (feet)	**0.31**	1.47 (log value)
Anode Length (feet)	**2.08**	**174.59 Horozontal anode resistance**
2 time anode depth (feet)	**20**	**222.55 Vertical anode resistance**

Circuit Resistance Current Requirements (plug in Resistance value)				
Anode Resistance to Earth	**174.59**	OHMS		
Driving Potential (v)	**0.85**	VOLTS		
Individual anode output	0.005	AMPS	**Check**	**Between 0% and 25%**
Number of anodes to be installed	**10**	ANODES	-40.15%	Yes
Total circuit resistance	36.02	OHMS		
Current output of system	0.0236	AMPS		
Consumption Rate (lb/A-yr)	**17.00**	LB/A-YR		

Anode life based on anodes to be installed **211.87 YEARS** (considers 50% anode efficiency)

Design conforms to the following standards:
National Association of Corrosion Engineers (NACE)
Standard Recommended Practice SP 0169 latest revision

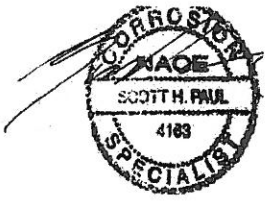

CorrTech Inc Task Order 020
Client NY DDC
Project TRUNK MAIN Bronx, New York Rockaway Beach Boulevard and Arverne Boulevard between Beach 59th Street and Beach 49th Street.
Contract QED 1007
Prepared 1/14/15

Quantity and Cost Estimating

TOTAL-FURNISH AND INSTALL CATHODIC PROTECTI(

Item No	Description	Quantity	Measure
1	17-pound high potential magnesium anodes	130	each
2	Stuart Steel Type S Splice Kit	65	each
3	AWG 8 HMWPE header cable	2,600	feet
4	AWG 10 THWN, Red, White	600	feet
5	AWG 10 THWN, Red, Blue, Green,	2,500	feet
6	Thermite welds, CA-15	40	each
7	Copper-copper sulfate reference cells w/50-ft HMWPE 12 yello	10	each
8	Counter electrodes w/50-ft AWG 12 THWN Purple	10	each
9	Burndy KS-17 Copper Split bolts (for anode splicing and test st	65	each
10	3M Supper 88- Black Electrical Tape (used with splice kit)	20	each
11	3M 130 C Rubber Tape (used with splice kit)	20	each
12	Cans 3M scotchkote eletrical coating FD (used with splice kit)	6	each
13	Royston Handi-Caps (cover thermite weld)	40	each
14	Test station housing (supplied by NYC DEP)	12	each
15	Acrylic Tags for Labeling Test Stations	12	sets

ATTACH TO CONTRACT DOCUMENTS

THE CITY OF NEW YORK
DEPARTMENT OF DESIGN AND CONSTRUCTION
INFRASTRUCTURE DIVISION
BUREAU OF DESIGN

PROJECT ID: QED1007

FOR THE CONSTRUCTION OF TRUNK AND DISTRIBUTION WATER MAINS IN ARVERNE BOULEVARD BETWEEN BEACH 59TH STREET AND BEACH 54TH STREET; ROCKAWAY BEACH BOULEVARD BETWEEN BEACH 54TH STREET AND BEACH 49TH STREET; BEACH 67TH STREET BETWEEN ROCKAWAY FREEWAY AND ROCKAWAY BEACH BOULEVARD; ROCKAWAY BEACH BOULEVARD BETWEEN BEACH 54TH STREET AND BEACH 53RD STREET; AND ROCKAWAY BEACH BOULEVARD BETWEEN BEACH 52ND STREET AND BEACH 49TH STREET

INCLUDING STORM AND SANITARY SEWER WORK

Together With All Work Incidental Thereto
BOROUGH OF QUEENS

ADDENDUM NO. 3

DATED: June 23, 2015

This Addendum is issued for the purpose of amending the requirements of the Contract Documents and is hereby made part of said Contract Documents to the same extent as if it was originally included therein.

GAS COST SHARING (EP-7) STANDARD SPECIFICATIONS

EP-7 GAS COST SHARING
STANDARD SPECIFICATIONS

TABLE OF CONTENT

I - NOTICE TO ALL BIDDERS; GAS COST SHARING WORK

II - GENERAL PROVISIONS; GAS COST SHARING WORK

1. General
2. Gas Interferences And Accommodations
   2a. Water Main Accommodations
   2b. Sewer Accommodations
3. Quantity Overruns, EP-7 Funded Bid Items
4. Changes And Extra Work
5. Excavation
6. Backfilling And Street Restoration
7. Non-Responsive Bids
8. Minimum Clearances
9. Work By Facility Operator
10. Materials Furnished By Facility Operator
11. Liability And Insurance
12. Width And Depth Of Excavation
13. Depth And Crossing Angles Of Gas Facilities
14. Maintenance Of Traffic For Gas Work
15. Relocated Gas And Temporary Systems Installation
16. Role Of Company Inspector
17. Coordination With Gas Company

III - TECHNICAL SECTION

SECTION 6.01 - Trench Crossings; Support And Protection Of Gas Facilities And Services.
SECTION 6.02 - Extra Excavation For The Installation Of Catch Basin Sewer Drain Pipes With Gas Interferences.
SECTION 6.02.1 - Extra Excavation For The Installation Of Catch Basin Sewer Drain Pipes With Upstream Inverts Greater Than Six (6) Feet.
SECTION 6.03 - Removal Of Abandoned Gas Facilities. All Sizes.
SECTION 6.03.1 - Removal Of Abandoned Gas Facilities With Possible Coal Tar Wrap. All Sizes. (For National Grid Work Only)
SECTION 6.03.1a - Removal Of Abandoned Gas Facilities With Possible Coal Tar Wrap. All Sizes. (For Con Edison Work Only)
SECTION 6.04 - Adjust Hardware To Grade Using Spacer Rings/Adaptors. (Street Repaving.)
SECTION 6.05 - Adjust Hardware To Grade By Resetting. (Road Reconstruction.)
SECTION 6.06 - Special Care Excavation And Backfilling.
SECTION 6.07 - Test Pits For Gas Facilities.

IV - STANDARD SKETCHES; GAS COST SHARING WORK

NO. 1 - Support Requirements For Gas Mains And Services Crossing Excavation Greater Than 4'-0" Wide At Any Angle
NO. 1A - Support Requirements For Gas Mains Over 16" Diameter Up To And Including 48" Diameter Crossing Excavation At Any Angle
NO. 2 - Typical Methods Of Measurement For Gas Crossings
NO. 3 - Utility Crossings During Catch Basin Chute Connection Pipe Installation
NO. 4 - Utility Crossings During Catch Basin Chute Connection Pipe Installation (Extra Depth)
NO. 5 - Gas Main Encroachment On And/Or Parallel To Excavation Of Unsheeted Trench

V - PRELIMINARY GAS WORK TO BE PERFORMED BY FACILITY OPERATOR

VI - LISTING OF APPROXIMATE LOCATIONS OF EP-7 BID ITEMS QUANTITIES

I - NOTICE TO ALL BIDDERS; GAS COST SHARING WORK

All prospective bidders are hereby advised that, pursuant to the "Gas Facility Cost Allocation Act", ("the Act"), the City of New York has entered into an agreement ("the Agreement") with the gas companies (Con Edison or National Grid (formerly KeySpan Energy Delivery)) operating in their respective areas of the City to "share" the cost of facility relocation and/or support and protection of facilities disturbed by proposed water and/or sewer and related City work specified in this contract. Therefore, bid items, specifications and estimated quantities for the incremental costs of support and protection of certain gas facilities have been included in this contract. The low bid for this contract shall be determined by examining each bid for all work to be performed under this contract including any work of support and protection of gas facilities to be performed. The Contractor shall not seek additional compensation from gas companies except as specifically set forth in its contract.

II - GENERAL PROVISIONS; GAS COST SHARING WORK

1. General:

The Contractor shall perform City work with interferences from existing live and abandoned gas facilities. This shall be defined as utility work. Therefore, this contract includes bid items, specifications and estimated quantities designed to fully compensate him/her for the incremental costs of supporting, protecting, providing accommodations and, avoiding disturbing gas facilities located in the streets shown on the contract drawings. In the event that any other provisions of this contract related to gas facilities (or private utilities) conflict with these provisions, these provisions shall supersede and govern all work related to gas facilities owned by the companies operating in the project area. All utility work, as defined in these specifications, including changes and additions thereto shall be paid solely by the City except when specified otherwise in this contract. Contractor hereby agrees that the facility operator shall not be liable to pay him/her for any work performed including extra utility work. Contractor agrees that its bid prices include all compensation for loss of productivity and efficiency, idle time, delays (including any delays occasioned by negotiation of a contract change), change in operations, mobilization, demobilization, remobilization, added cost or expense, lost of profit, other damages or impact costs that may be suffered by or because of utility work, or the presence of gas facilities in the proximity of City work and that it will not seek additional compensation for these items. All disputes shall be resolved as specified in the contract.

Pursuant to the Act, Agreement, and the New York City Administrative Code, the gas company(ies) has been directed by the Commissioner and is required to perform all maintenance, repairs, replacement, shifting, alteration, relocation, and/or removal work that are not part of this contract. By having bid on this contract, the Contractor understands and agrees that the Commissioner has preasserted any right the City has to require, including the issuance of any directives or so called "order outs" under the New York City Administrative Code, any or all gas companies to maintain, repair, replace, protect, support, shift, alter, relocate, and/or remove all gas facilities that are about to be disturbed by the City contract work. The issuance of additional such directives during the performance of the contract work, where necessary in the sole judgment of the Commissioner, shall be initiated by such Commissioner as set forth in the relevant sections of the Act and Agreement. Contractor further agrees to insert such requirements as set forth herein above into any contracts with its approved subcontractors so that its subcontractors also understand and agree to such contract requirements.

2. Gas Interferences And Accommodations:

During the performance of sewer and water main work funded by the New York City Department of Environmental Protection (NYCDEP), as instructed by the Engineer, the use of any applicable contract bid item is allowed in order to resolve and accommodate all gas facilities interferences with such City work, including the removal of contaminated soil in associated trench excavation. This is in addition to the specified EP-7 bid items in the contract. Payment for such accommodation shall be funded by EP-7 bid item "UTL-GCS-2WS - GAS INTERFERENCES AND ACCOMMODATIONS" (F.S. Fixed Sum). The value of such accommodation shall be computed by multiplying the appropriate unit prices bid to the quantity of work performed, as determined by the Engineer, and applying the total amount thus to be paid

to EP-7 bid item "UTL-GCS-2WS - GAS INTERFERENCES AND ACCOMMODATIONS". When EP-7 bid item "UTL-GCS-2WS - GAS INTERFERENCES AND ACCOMMODATIONS" does not exist, such additional accommodation work shall be at no cost to the City but shall be a matter of adjustment between gas facility operator and Contractor. Private facilities, other than gas, that become in interference due to gas interferences accommodations shall also be accommodated, if so directed by the Resident Engineer, at no additional cost to the City and, provided that its owner agrees to be responsible for all additional costs to Contractor, otherwise, such facility shall be ordered by the City to be maintained, shifted, relocated or replaced by its owner at his/her expenses.

2a. Water Main Accommodations:

When water main construction is to be performed in this contract, Contractor shall be required, if warranted by field conditions, and at locations designated by the Resident or Borough Engineer, to change the vertical or horizontal alignment of water mains including but not limited to all additional labor, material, work method accommodations, furnishing, delivering and laying offset fittings and pipes, etc., necessary in order to complete water main installation and, avoid gas interferences in the project area, including street intersections. Typical work method accommodations shall include, but not be limited to, pier and plate, installation of filter fabric and select fill, etc. Such work shall be performed as directed by the Engineer and in accordance with contract specifications and latest edition of water mains standards and specifications.

2b.Sewer Accommodations:

When sewer construction is to be performed in this contract, Contractor shall be required, if warranted by field conditions, and at locations designated by the Resident or Borough Engineer, to change the horizontal alignment of sewer facilities (if possible) including but not limited to all additional labor, material, work method accommodations, furnishing, delivering and construction of additional manholes or modification of manholes/catch basins, extending chute connections, house connections, using alternate materials and methods, poured-in-place structures, etc., necessary in order to complete sewer installation and, avoid gas interferences in the project area, including street intersections. The term sewer facility shall include, but not be limited to, all sewer pipe and appurtenances, manholes, catch basins, catch basin chutes, etc. Such work shall be performed as directed by the Engineer and in accordance with contract specifications and latest edition of sewer standards and specifications.

3. Quantity Overruns, EP-7 Funded Bid Items:

No quantity overrun, in excess of one hundred twenty five (125) percent, shall be permitted for EP-7 funded bid items (gas) included in this contract, except when Resident Engineer determines that such overruns are caused by field modifications to planned City work, or approved construction methods, or contract scope changes. Overruns not paid by City shall be negotiated and paid to Contractor by gas facility operator who then shall be entitled to reimbursement by NYCDEP under established cost sharing procedures.

4. Changes And Extra Work:

This section is not applicable to work defined under "Emergency Reconstruction Contracts" or so-called "Where and When Contracts" since these projects, by definition, inherently encounter unanticipated gas facilities and cannot be pre-engineered. In all other cases, any contract changes proposed for City work shall also cover and include all associated changes to support and protection of gas facilities affected by such changes to City work. In all other cases where the Contractor finds that City work cannot be performed as planned and specified and/or, as approved because of a need to support, protect and/or alleviate interferences from gas facilities that were not listed and/or shown, or incorrectly shown in contract plans and specifications, he shall immediately notify the Resident Engineer and the facility operators' representative of his findings. Resident Engineer shall promptly examine such claims and determine whether or not such work is covered by contract bid items and /or specifications (contract bid items and specifications shall include city contract items as well as EP-7 items). The Resident Engineer shall also examine the claim to determine if the application of EP-7 bid item "UTL-GCS-2WS - GAS INTERFERENCES AND ACCOMMODATIONS" is appropriate to resolve the claim. If upon examination, the Engineer determines that such field conditions were unanticipated (not shown and/or listed, or incorrectly shown in contract documents) and are not covered by bid items and contract specifications, he shall then direct the Contractor and the affected facility operator to negotiate the cost of supporting and

protecting, and/or alleviating the impact on City work caused by such unanticipated gas facilities with each other with the understanding that the performance of City work shall continue during negotiations. If a cost agreement is reached, the Contractor and facility operator shall adjust such costs between themselves at no additional costs to the City contract. If the Contractor and affected facility operator do not reach an agreement concerning the price to be paid for the extra work within five (5) business days of the Engineer's directive to engage into such negotiations and, after considering: public safety and inconvenience, requirements of laws and regulations applicable to private utilities, integrity of all utility systems, including but not limited to sewer and water, gas, electric, telephone and, cable TV facilities, sound engineering practices, cost (long and short term) to all affected parties, and potential City work delays, then the Resident Engineer, depending on nature and severity of interferences with City work, shall either, direct the facility operator to relocate or replace its facilities at its own discretion and cost, reimbursable by NYCDEP under established gas cost sharing procedures or, direct the Contractor to perform the utility work on actual time, material and equipment costs basis pursuant to relevant contract requirements and amendments. Contract bid prices for any applicable items of work involved shall be applied, or converted to an allowance for time and material charges. Changes shall be for affected portions of utility work and, shall be processed with EP-7 funds.

5. Excavation:

All excavators shall notify the NYC/LI One Call Center at 1-800-272-4480 at least two (2) working days, not including the day of the call, but not more than ten (10) working days in advance of the start of any excavation work. The gas company(ies) will mark out its facilities within the project limits and provide Construction Inspector(s) during all excavation work in close proximity (within twelve (12) inches) to gas facilities. The Contractor shall exercise extreme caution when excavating in the vicinity of any gas facilities. Hand excavation shall be performed within twelve (12) inches of gas facilities. The Contractor prior to excavating underneath these facilities shall adequately support all gas facilities. Standard support details for gas facilities have been included in the specifications. Any damage to gas facilities shall be reported immediately to the gas company(ies). The Contractor shall be responsible for all cost associated with repairs made necessary by damages caused by his operations.

6. Backfilling And Street Restoration:

Backfilling operations and street restorations shall be in accordance with contract requirements.

7. Non-Responsive Bids:

Every gas (EP-7) bid item has a suggested "Not less than" value per unit indicated on contract bid sheet. Bids resulting in cost of less than suggested for EP-7 items are hereby prohibited and if submitted shall be considered NON-RESPONSIVE.

8. Minimum Clearances:

Clearance requirements for City work shall govern and supersede any clearance requirement of gas facility operator. Therefore, a minimum of twelve (12) inches clearance between private utilities and City water mains, sewers or related structures to be installed in this contract shall be maintained. When this clearance is not attainable, the Resident Engineer may allow a minimum of four (4) inches clearance. With less than twelve (12) inches clearance a neoprene/polyethylene shield (to be provided by facility operator) shall be installed as part of all work item specifications. However, if Resident Engineer determines that City work cannot be performed within allowable clearance and no reasonable City accommodation (no-cost change to City work) is possible, the City shall direct the facility operator to remove, relocate, shift, or alter their facility(ies) pursuant to the New York City Administrative Code.

9. Work By Facility Operator:

The facility operator may find it necessary to perform the following types of work during performance of City work: accommodating a contractor's request for gas facilities modifications (in order to facilitate City contractor's proposed construction method) or, remedial and emergency work on gas facilities proper with their own resources and materials if an approved method of construction for City work causes unanticipated disturbances to gas facilities or, replacing defective gas facilities when they are exposed by the Contractor and their actual conditions are observable by the facility operator. Also included in the above category of defective gas facilities are: the presence of environmental contaminants attributable to

the gas facility in or around gas facilities. If such work is deemed required by the facility operator or if facility operator is directed by the City to address such deficiencies at any time during the course of construction, the Contractor shall modify the construction schedule at no cost to the City and allow the facility operator five (5) business days to perform such work without interferences. Additional costs to the facility operator (in cases of accommodations) or, Contractor (in cases of defective gas facilities) due to such gas work, if any, shall be the responsibility of the parties involved and not of the City. Such costs shall be a matter of adjustment between the Contractor and the facility operator.

10. Materials Furnished By Facility Operator:

It shall be the Contractor's responsibility to inspect material to be installed by him immediately upon delivery and advise the facility operator through its authorized representative, of all damaged materials. The Contractor at no additional costs to the City or the facility operator shall replace any material that is damaged or lost after the Contractor's inspection.

11. Liability And Insurance:

Notwithstanding the provisions of this contract, the existing division of liabilities to third parties shall remain the same as between the City and the company. Therefore, it is specifically agreed by the City, company and Contractor (by bidding on this contract) that for the purpose of any liabilities to third parties, that the City contractor performing work directly and physically relating to gas company facilities in this project, shall be deemed an agent of the company and not an agent of the City, the New York City Municipal Water Finance Authority, or the New York City Water Board. Contractor shall include the company as an additional insured on all insurance policies maintained to comply with the City's insurance requirements.

12. Width And Depth Of Excavation:

Contractor shall not be authorized to deliberately change trench or excavation widths and/or depth specified without Engineer's approval. Enlargement of any side of excavation up to eighteen (18) inches beyond pay limits (or inside face of sheeting) requested by the Contractor for the installation of certain types of sheeting may be granted. However, such enlargements or those greater than allowable shall not be approved when, in the sole judgment of the City, field conditions allow the water mains and sewer work to be performed within the limits specified and, the sole purpose of such enlargement request is to impact adjacent utilities (public or private) whose support and protection are part of this contract. Any approval shall be given at no additional cost to the City contract, including EP-7 funding, and all costs associated with unauthorized enlargements shall be the sole responsibility of the Contractor.

13. Depth And Crossing Angles Of Gas Facilities:

Where gas facilities are shown (or specified as) crossing proposed alignment of sewers, water mains, catch basins and chute connections or any other proposed excavations at specific angles (as measured off plans or sketches or specified in contract), it shall be understood that actual field measurements may deviate (plus or minus) forty-five (45) degrees from those shown or specified. The cover, or depth from street surface to top of facilities, shall be as shown or specified in contract documents, no deviation is to be assumed. Where gas facilities are not shown on contract documents, but their support and protection are otherwise included in this contract then, all references to facilities crossing at "various angles and depth" in the gas sections shall mean that such facilities are crossing sewer, water, catch basin and, catch basin chute, and other excavations at a ninety (90) degree angle to the proposed sheeting line or side of excavation (for unsheeted trenches) with an allowable deviation of forty-five (45) degrees in any direction, except for catch basin chute excavation where the allowable deviation shall be sixty (60) degrees. Where the cover is not noted or specified, the bottom face of such facilities shall be assumed to be crossing catch basin chutes at a depth of three (3) foot eight (8) inches or less from the street surface. Paragraph No. 2 above shall apply in cases of distribution water main construction. Appropriate bid items and specifications are provided for cases where angle and depth are greater than stated above. This section also applies to work defined in "Emergency Reconstruction Contracts" or so-called "Where and When Contracts". These contracts are not pre-engineered and consequently have no drawings, sketches or determined locations and so, gas facilities encountered will be crossing existing and proposed sewer, water, catch basin/catch basin chutes and all appurtenances at various angles and depths.

14. Maintenance Of Traffic For Gas Work:

All work pertaining to gas bid items and specifications shall be performed within the contract maintenance of traffic plan as specified in the contract document. The bid price for the Maintenance and Protection of Traffic shall cover all work pertaining to gas items. The City shall make compensation for additional maintenance and protection of traffic items in connection with gas item of work only when such additional work is deemed reasonable and necessary by the Resident Engineer and is approved by him prior to its performance.

15. Relocated Gas And Temporary Systems Installation:

In cases where the Contractor is allowed to select the location for temporary construction such as, installation of dewatering headers, wells, well points, etc., he shall not disturb any gas facilities shown on sketches provided in this section. The only exception shall be, if the affected gas company agrees to such relocation and provided that the cost of such relocation is a matter of adjustment between the company and Contractor, and at no cost to the City.

16. Role Of Company Inspector:

In any case in which the City elects to perform some or all support and protection work with its own employees, personnel or contractors, the facility operator shall provide onsite inspectors to approve and certify such support and protection work (exclusive of City accommodations) performed by the City's own employees, personnel, and contractors. Facility operator's inspectors are not authorized to direct City contractor during the performance of contract work. They shall act through the City Resident Engineer and provide him/her required approvals and certifications, prior to preparing partial payments of EP-7 items, in a format and frequency to be prescribed by the appropriate City Head of Construction.

17. Coordination With Gas Company:

The Contractor shall be required to notify the gas company(ies), in writing, at least two (2) weeks prior to the start of final paving in order to allow companies to complete any unfinished gas work located within the area to be paved. Every effort shall be made to maintain gas service with minimum inconvenience to the public.

III - TECHNICAL SECTION

SECTION 6.01 - Trench Crossings; Support And Protection Of Gas Facilities And Services.

1. Description:

Under this section, the Contractor shall provide all labor, materials, equipment, and incidentals required to support and/or protect the integrity of gas mains, services and appurtenances of any sizes, configurations, and operating pressures crossing trench excavations above subgrade for planned construction of sewers and water mains facilities. A gas service shall be defined as a gas pipe of three (3) inches in diameter or less branching from the main to a customer pick up point or property valve box. A gas main may be any size pipe that is part of a distribution or transmission network other than services described above. Crossings shall be defined as gas facilities spanning the width of excavation (one side to the other side). These crossings may be at various angles and depth as shown on "Gas Cost Sharing Work Standard Sketches Nos. 1 and 1A", and as specified in "General Provisions; Gas Cost Sharing Work Paragraph No. 13" and, at the locations shown or listed in contract documents. The gas company operating in the area, (facility operator), owns these facilities. The work shall be performed in accordance with contract specifications, plans, and at the directions of the Resident Engineer in consultation with the authorized representatives of the facility operator.

2. Method Of Construction:

A. Protection: In general, the gas facilities shall be protected as required by New York State Industrial Code 753. In particular, the Contractor shall use hand excavation methods (pick and shovel or hand held power tools) directly below the pavement base to expose the gas facilities (marked out by facility operators) and to ascertain the clearances and cover of the facilities with respect to the proposed excavation. Upon exposing the affected facilities sufficiently, at the discretion of the Resident Engineer, to ascertain the foregoing, Contractor shall be permitted to proceed with a combination of hand and machine excavation, as appropriate, outside a zone of protection whose limit shall be defined as a perimeter located twelve (12) inches from the outside face of each gas facility crossings (See "Gas Cost Sharing Work Standard Sketch No. 2"). If the facilities are in direct interference with City work, meaning that "Minimum Clearances" described in "General Provisions; Gas Cost Sharing Work Paragraph No. 8" cannot be maintained, and excavation has to be temporarily or permanently abandoned then this particular location shall become a test pit and dealt with as specified in Section 6.07, and "General Provisions; Gas Cost Sharing Work Paragraphs Nos. 2 and 8".

B. Support: Gas mains or services crossing excavations equal or less than four (4) feet wide are generally self supporting, unless field conditions as determined by the Resident Engineer require otherwise. The support requirements for gas mains and services crossing excavations greater than four (4) feet wide shall be as shown on the attached "Gas Cost Sharing Work Standard Sketch No. 1" and Contractor shall use sheeting methods that permit the maintenance of gas facilities in their existing locations and configurations. Alternate methods equivalent to those shown on the sketch or accommodations by the facility operator proposed by the Contractor in order to facilitate the execution of the specified work shall be allowable, provided that prior approval is obtained by the Contractor from the Engineer and the facility operator. The support and protection of gas facilities crossings shown on plans, drawings, listings or otherwise identified in this contract shall not be circumvented with the issuance of so called "order outs".

3. Method Of Measurement:

The Contractor shall be paid for supporting and/or protecting gas facilities crossing trench excavations under the appropriate bid items covered by this section. The Contractor shall be directly responsible to the facility operator for the total cost of using any alternate method requiring the use of resources owned by the facility operator. Regardless of the method used, the City shall pay the bid price for the appropriate support and/or protect item of work. The average rate charged by the facility operator for alternate support and protection work such as, disconnecting and reconnecting gas services is listed in attached "Schedule GCS-A".

4. Payment Restrictions:

These items shall not be paid for: gas services crossing unsheeted water main trench excavation; abandoned gas main/services identified by facility operator; gas mains/services crossing trench excavations for fire hydrant branch connections pipes, catch basins and/or chutes (sewer drain pipe), house sewer and/or water services; gas facilities encroaching any face of excavation for sewer and/or water construction, all of which are covered under other contract sections. Also this item shall not be paid for new gas mains and services crossing water trenches when trenching for such new facilities has been performed by the Contractor in common with trench excavation for City work (overlapping trench limits). The cost of supporting and protecting such gas facilities crossings shall be deemed included in the cost of trench excavation for the new gas facilities. This payment restriction shall apply even if such common trench gas excavation is not part of the contract. The prices bid for items covered by this section represent full compensation to Contractor to completely perform the work described. No other bid items shall be combined with these items in order to pay for gas main and/or services crossing excavations specified herein.

5. Method Of Payment:

Each (Ea.) gas facility crossing trench excavation as described in these specifications shall be counted for payment.

6. Price To Cover:

The cost of timber/steel supports installed for gas facilities shall be included in the bid price. The bid price for each crossing shall also cover all additional supervision, labor, material (except those provided by the facility operator), equipment and insurance necessary to completely maintain the gas facilities without disruption of service to the customers and in accordance with contract plans, specifications and facility operator standards. The price shall also include: changes of method of operations; sheeting modifications where necessary to accommodate the gas facilities crossings; installation and removal of water pipe under gas facilities (so called "snaking"); extra care during excavation (including hand excavation under existing single and multiple gas facilities); extra backfilling and compaction around, over and under gas facilities; installation and removal of sheeting around gas facilities; associated maintenance and protection of traffic; barricades; and traffic plates that may be required to temporarily close and/or complete the work.

SECTION 6.02 - Extra Excavation For The Installation Of Catch Basin Sewer Drain Pipes With Gas Interferences.

1. Description:

Under this item, the Contractor shall provide all labor, materials, equipment, insurance, and incidentals for the extra excavation associated with the installation of catch basin sewer drain pipes (chute) under gas facilities of various sizes crossing the trench excavation at various angles and depth at the locations shown in the contract documents and also, for the support and protection of these facilities during associated excavation and backfill operations. The gas company operating in the area, (facility operator), owns these facilities.

2. Method Of Measurement:

The bid price shall be per location (Each) where extra excavation is required when catch basin sewer drain pipes are installed at an upstream invert depth lower than four (4) feet (up to a maximum of six (6) feet) from the proposed pavement grade because the bottom faces of interfering gas mains and appurtenances are located at a depth greater than three (3) foot eight (8) inches from proposed pavement surface (See "Gas Cost Sharing Work Standard Sketch No. 4").

3. Method Of Construction:

Incremental cost responsibility for chute excavation is determined by the first private facility encountered starting from catch basin structure proper and that prevents the installation of the chute connection at an upstream cover less than or equal to three (3) feet or any other minimum cover required to avoid City facilities (e.g. water, sewer, etc.) as directed by the Resident Engineer.

4. Payment Restrictions:

This item shall not apply and related bid item shall not be paid in cases where:

A. Upstream invert chute is more than six (6) feet deep because of gas facilities.

B. Chute cannot be installed above existing gas facilities because of interferences with other private facilities that are not otherwise covered under this contract, regardless of upstream invert depth.

The above cases shall be at no cost to the City, but shall be a matter of adjustment between the Contractor and the facility operator(s).

5. Price To Cover:

The bid price shall cover the additional cost of all additional supervision, labor, materials, equipment and insurance, to complete the installation of catch basins and associated sewer connections in accordance with the contract plans and specifications. The price shall include: excavation by hand around and under single and multiple gas facilities; locating, supporting and protecting gas facilities; backfilling and all other items necessary to perform all work incidental thereto including: installation and removal of drain pipe under gas facilities ("snaking"); widening of trenches to facilitate the above work; subsequent additional

backfill and pavement restoration; modifying precast catch basin window to accommodate connection; changing sheeting method and configuration to accommodate gas facility crossings; maintenance and protection of traffic; barricades; and installation of traffic plates that may be required to temporarily close and/or complete the work. The price shall not include removal of ledge rock and/or excavation of boulders in open cut.

SECTION 6.02.1 - Extra Excavation For The Installation Of Catch Basin Sewer Drain Pipes With Upstream Inverts Greater Than Six (6) Feet.

1. Description:

Under this item, the Contractor shall provide all labor, materials, equipment, insurance and incidentals for the extra excavation of catch basin chutes where the upstream invert is greater than six (6) feet under gas facilities of various sizes crossing the trench excavation at various angles and depth at the locations shown in the contract documents or as determined by field conditions and also, for the support and protection of these facilities during the associated excavation, sheeting and backfilling operations.

2. Method Of Measurement:

The bid price shall be per location (Each) where extra excavation and sheeting is required when the catch basin chute installed at an upstream invert depth lower than six (6) feet from the proposed pavement grade because the bottom faces of the interfering gas mains and appurtenances are located at a greater depth than three foot eight inches from the proposed pavement surface only.

3. Method Of Construction:

Incremental cost responsibility for chute excavation is determined by the first private facility encountered during such excavation when initiated from catch basin structure and that prevents the installation of the chute at an upstream cover less than or equal to three (3) feet or any other cover required to avoid City facilities as directed by the Resident Engineer.

4. Payment Restriction:

This item shall not apply and related bid item shall not be paid in cases where:

Upstream invert chute is less than or equal to six (6) feet deep because of gas facilities. Section 6.02 shall be paid.

5. Price To Cover:

The bid price shall cover the additional cost of all supervision, labor, materials, equipment and insurance to complete the installation of catch basin and associated sewer connections in accordance with the contract plans and specifications. The price shall include: excavation by hand around and under single and multiple gas facilities; locating, supporting and protecting gas facilities incidental thereto; widening of trenches to facilitate the above work; subsequent additional backfilling and pavement restoration; modifying pre-cast basin window to accommodate connection; the installation of catch basin with deeper sumps as specified; additional sheeting and changes in sheeting method and configuration to accommodate gas facility crossings; maintenance and protection of traffic; barricades; and installation of traffic plates that may be required to temporarily close and/or complete the work.

SECTION 6.03 - Removal Of Abandoned Gas Facilities. All Sizes.

1. Description:

Under this section the Contractor shall provide all labor, materials, equipment, insurance and, incidentals required for the removal of abandoned gas mains, services, or appurtenances thereof, located within the street shown on the contract plans, owned by gas company operating in the project area (facility operator), used or to be used for or in connection with or to facilitate the conveying, transportation, distribution or

furnishing of gas (natural or manufactured or mixture of both) for light, heat, or power, but does not include property used solely for or in connection with business of selling, distributing or furnishing of gas in enclosed containers. Such removal shall include only abandoned gas facilities that interfere with (i.e. cause additional work) City work.

2. Determination Of Operating Status Of Gas Facilities:

The Contractor shall notify facility operator, as required by New York State Industrial Code 753. Gas facilities shall not be removed without the approval of the facility operator whose authorized representative shall certify in writing (specific facility or area wide facilities certification) and in a timely manner acceptable to the Resident Engineer that abandoned facilities are free of combustible gas and any other environmental contaminants prior to removal. The Resident Engineer shall rely on facility operator's certification. The facility operator may request the excavation of test pits (See Section 6.07) for this determination ahead of City work and, Contractor shall provide safe access, facilitate and permit facility operator to enter test pit excavations for the purpose of testing gas facilities to be removed by the Contractor. However, facility operator may prefer to make this test during performance of City work, in order to issue the above certification. This shall be permitted provided that it is agreed that additional costs, if any resulting from this choice shall be a matter of adjustment between the Contractor and facility operator only, and at no cost to the City.

3. Restrictions:

The facility operator shall be solely responsible for its contaminated gas facilities, surrounding contaminated soil and their disposal and abatement procedures, unless contract bid items are applicable and provided for such work. In such cases, the quantity removed shall be charged to EP-7 bid item "UTL-GCS-2WS - GAS INTERFERENCES AND ACCOMMODATIONS" at the City bid prices.

4. Method Of Measurement:

Abandoned gas pipeline removal shall be measured for payment per linear foot of pipe and appurtenances removed.

5. Price To Cover:

The price shall cover all additional cost of supervision, labor, materials, equipment, and insurance necessary to complete this work in accordance with the contract plans and specifications, including excavation by hand around and under other City and facility operator owned properties and, where necessary, support and protection of such properties. The price shall also cover breaking, cutting, and/or burning of abandoned gas pipes and their disposal from the site; sealing open ends remaining in the excavation with concrete or caps (caps to be provided by the facility operator) and backfilling of the area where the pipeline has been removed with clean backfill. The price shall also include any required dump charges. This item does not include any type of extra excavation, backfilling, compaction, pavement removal and restoration associated with abandoned gas facilities removal, all of which are covered under Section 6.06.

SECTION 6.03.1 - Removal Of Abandoned Gas Facilities With Possible Coal Tar Wrap. All Sizes. (For National Grid Work Only)

1. Description:

Under this section the Contractor shall provide all labor, materials, equipment, insurance and, incidentals required for the removal of abandoned gas mains, services or appurtenances thereof, located within the street shown on the contract plans, owned by the gas company operating in the project area (facility operator), used or to be used for or in connection with or to facilitate the conveying, transportation, distribution or furnishing of gas (natural or manufactured or mixture of both) for light, heat, or power, but does not include property used solely for or in connection with business of selling, distributing or furnishing of gas in enclosed containers. Such removal shall include only abandoned gas facilities that interfere with (i.e. cause additional work) City work. These gas facilities may be coated with Coal Tar Wrap and so, may require special handling and disposal methods as specified in National Grid Standard Operating Procedure 12-2, Coal Tar Wrap Handling and 12NYCRR56.

2. Determination Of Operating Status Of Gas Facilities:

The Contractor shall notify facility operator, as required by New York State Industrial Code 753. Gas facilities shall not be removed without the approval of the facility operator whose authorized representative shall certify in writing (specific facility or area wide facilities certification) and in a timely manner acceptable to the Resident Engineer that abandoned facilities are free of combustible gas and any other environmental contaminants prior to removal. The Resident Engineer shall rely on the facility operator's certification. The facility operator may request the excavation of test pits (See Section 6.07) for this determination ahead of City work and, the Contractor shall provide safe access, facilitate and permit facility operator to enter test pit excavations for the purpose of testing gas facilities to be removed by the Contractor. However, the facility operator may prefer to make this test during performance of City work, in order to issue the above certification. This shall be permitted provided that it is agreed that additional costs, if any, resulting from this choice shall be a matter of adjustment between the Contractor and the facility operator only, and at no cost to the City contract. Should such investigation result in the determination that the abandoned gas facilities do not contain Coal Tar Wrap then the removal of said facilities shall be covered under separate item (See Section 6.03).

3. Requirements:

The City Contractor shall excavate abandoned gas facility sufficiently, either in its entirety, or at locations determined by Contractor to allow the removal of Coal Tar Wrap (if present on the abandoned gas facility) and to facilitate the safe extraction of manageable lengths of abandoned pipe without damage to adjacent facilities, utilities or City structures either parallel to or crossing above or below abandoned gas facility. The Contractor is to allow access to the designated cutting points within the Contractor's trench by authorized National Grid personnel who will remove the Coal Tar Wrap as per National Grid procedures. This work by National Grid personnel shall be performed in a timely fashion and shall not unduly impede the Contractor's progress and/or productivity. Upon completion of the coating removal, the Contractor shall be allowed to cut, burn or grind the gas facility and remove the section of abandoned pipe. The Contractor at a site designated by the Contractor shall stockpile the removed pipe. The facility operator will be responsible to provide trucking and disposal services with its own personnel and shall remove the stockpiled pipes during off hours or during such time as agreed to by the Contractor. Since the pipe removed will remain the property of the facility operator and is to be disposed of by the facility operator, the facility operator shall be responsible for any required notifications, filings, dump charges and incidentals associated with the disposal of abandoned gas facilities found to contain Coal Tar Wrap.

4. Method Of Measurement:

Abandoned gas pipeline removal shall be measured for payment per linear foot of pipe and appurtenances removed.

5. Price To Cover:

The price shall cover all additional cost of supervision, labor, materials, equipment and insurance necessary to complete this work in accordance with the contract plans and specifications, including excavation by hand around and under other City and facility operator owned properties and, where necessary, the support and protection of such properties. The cost shall also include hand excavation in the area(s) of proposed abandoned pipe cut(s), cutting and/or burning of abandoned gas pipes and stockpile of removed sections of abandoned pipe and associated maintenance and protection of traffic, blocking and temporary fencing if required. The unit price shall also cover sealing open ends remaining in the excavation with concrete or end caps (end caps to be provided by the facility operator) and backfilling of the area where the abandoned pipeline has been removed with clean backfill material. This item does not include any type of extra excavation, backfilling, compaction, pavement removal and/or restoration (temporary and permanent) associated with abandoned pipe removal ("lost trench"), all of which are covered under separate Section 6.06. The price shall also include allowance for any loss of productivity by the Contractor due to required facility operator work to remove pipe coating and prepare pipe for cutting as well as any change in Contractor's excavation method, additional trucking and/or stockpiling costs.

SECTION 6.03.1a - Removal Of Abandoned Gas Facilities With Possible Coal Tar Wrap. All Sizes. (For Con Edison Work Only)

1. Description:

Under this section the Contractor shall provide all labor, material, equipment, insurance and, incidentals required to prepare abandoned gas mains, services and appurtenances thereof located within the street shown on contract plans, owned by the gas company operating in the project area (facility operator), for removal due to interference with proposed City work. These abandoned gas facilities were, at one time, used for or in connection with or to facilitate the conveying, transportation, distribution or furnishing of gas (natural, manufactured or a combination of both) for light, heat, or power, but does not include property used solely for or in connection with business of selling, distribution or furnishing of gas in enclosed containers. Such preparation for removal shall include only abandoned gas facilities that interfere with (i.e. cause additional work) City work. These gas facilities may be coated with Coal Tar Wrap which may contain asbestos or PCB's and so, may require special handling and disposal methods as specified in Con Edison - ASBESTOS MANAGEMENT MANUAL, CHAPTER 6 - ASBESTOS WORK PROCEDURES, SECTION 06.04 - COAL TAR WRAP REMOVAL. For under 25' (feet) in length and an approved NYC-DEP variance for over 25' (feet).

2. Determination Of Operating Status Of Gas Facilities:

The Contractor shall notify facility operator, as required by New York State Industrial Code 753. Gas Facilities shall not be removed without the approval of the facility operator whose authorized representative shall certify in writing (specific facility or area wide facilities certification) and in a timely manner acceptable to the Resident Engineer that abandoned facilities are free of combustible gas and any other environmental contaminants prior to removal. The Resident Engineer shall rely on the facility operator's certification. The facility operator may request the excavation of test pits (See Section 6.07) for this determination ahead of City work and Contractor shall provide safe access, facilitate and permit facility operator to enter test pit excavations for the purpose of testing gas facilities. However, the facility operator may prefer to make this test during performance of City work in order to issue the above certification. This shall be permitted provided that it is agreed that additional costs, if any, resulting from this choice shall be a matter of adjustment between the Contractor and the facility operator only, and at no cost the City contract. Should such investigation result in the determination that the abandoned gas facilities do not contain Coal Tar Warp then the removal of said facilities shall be covered under separate item (See Section 6.03).

3. Requirements:

The Contractor shall excavate abandoned gas facility sufficiently, either in it's entirety, or at locations determined by Contractor to allow the removal of Coal Tar Wrap (if present on the abandoned gas facility) and to facilitate the safe extraction of manageable lengths of abandoned pipe without damage to adjacent facilities, utilities or city structures either parallel to or crossing above or below abandoned gas facility. The Contractor is to allow access to the designated cutting points within the Contractors trench by authorized Con Edison personnel who will remove the Coal Tar Wrap as per Con Edison and/or NYC-DEP approved procedures. This access shall conform to all applicable codes, rules & regulations. This work by Con Edison personnel shall be performed in a timely fashion and shall not unduly impede the Contractors progress and/or productivity. Upon completion of the coating removal, the Contractor shall be allowed to cut, burn or grind the gas facility and remove the section of abandoned pipe. Contractor shall designate a specific site to stockpile those removed pipes. The facility operator will be responsible to provide trucking and disposal services with its own personnel and shall remove the stockpiled pipes during off hours or during such time as agreed to by the Contractor. Since the pipe removed will remain the property of the facility operator and is to be disposed of by the facility operator, the facility operator shall be responsible for any required notifications, filings, dump charges and incidentals associated with the disposal of abandoned gas facilities found to contain Coal Tar Wrap.

4. Method Of Measurement:

Abandoned gas facility removal shall be measured for payment per linear foot of pipe and appurtenances removed.

5. Price To Cover:

The price shall cover all additional cost of supervision, labor, materials, equipment and insurance necessary to complete this work in accordance with the plans and specifications, including, but not limited to, excavation by hand around and under other City and facility operator owned properties and, where necessary, the support and protection of such properties. The cost shall also include hand excavation in the area(s) of proposed abandoned pipe cut(s), cutting and/or burning of abandoned gas pipes and stockpile of removed sections of abandoned pipe and associated maintenance of traffic, blocking and temporary fencing if required. The unit price shall also cover sealing open ends remaining in the excavation with concrete or end caps (end caps to be supplied by facility operator) and backfilling of the area where the abandoned pipeline has been removed with clean backfill material. This item does not include any type of extra excavation, backfilling, compaction, pavement removal and/or restoration (temporary and permanent) associated with abandoned pipe removal ("lost trench"), all of which are covered under separate Section 6.06. The price shall also include allowance for any loss of productivity by the Contractor due to required facility operator work to remove pipe coating and prepare pipe for cutting as well as any change in Contractor excavation method, additional trucking and/or stockpiling costs.

SECTION 6.04 - Adjust Hardware To Grade Using Spacer Rings/Adaptors. (Street Repaving.)

1. Description:

Under this section, the Contractor shall provide all labor, supervision, materials, equipment, insurance and incidentals required to adjust to final grade gas street surface hardware located within the contract area boundaries shown on the plans. The gas company operating in the area, (facility operator), owns these facilities. The work shall be performed in accordance with the contract plans, specifications and at the directions of the Resident Engineer in concurrence with authorized representative of the facility operator.

2. Materials:

The facility operator shall furnish and deliver all prefabricated hardware parts required. These include adaptors for the grade adjustment proper and new street hardware if existing ones are found to be defective, all in accordance with the facility operator standards and City rules and regulations. The Contractor shall notify the facility operator of the installation schedule at least three (3) business days before materials are required on the site. Should the facility operator fail to deliver the necessary material according to any schedule mutually agreed upon by the Contractor and facility operator, the City shall not be responsible for any delays attributable thereto, nor for the failure of delivery of such materials. On project where material storage is not permitted on site, the facility operator shall deliver the required material to the Contractor's yard and it shall be the Contractor's responsibility to transport the material to the work site when needed for installation. It shall also be the Contractor's responsibility to inspect the materials to be installed by him immediately upon delivery and advise the facility operator through its authorized representative, of all damaged materials. The Contractor at no additional expense to the City or the facility operator shall replace any material that is damaged or lost after the Contractor's inspection.

3. Method Of Measurement:

The Contractor shall be paid for each six (6) inch round box and/or nine (9) inch square box adjusted to grade regardless of adjustment height requirements.

4. Price To Cover:

The unit price bid for this item shall include all additional labor, supervision, insurance, equipment and, material (except those to be provided by the facility operator), required to adjust each box to grade as required in the contract plans and specifications. The bid price shall also include the removal of existing frames and covers from existing facilities to be salvaged and returned to the facility operator and, all material transportation from the Contractor's material storage yard to the work site. In addition the bid price shall include "chipping" around existing box using appropriate means and methods where grinding is required.

SECTION 6.05 - Adjust Hardware To Grade By Resetting. (Road Reconstruction.)

1. Description:

Under this item, the Contractor shall provide all labor, supervision, materials, equipment, insurance and incidentals required to adjust to the proposed grade gas street surface hardware located within the contract area boundaries shown on the plans. The gas company operating in the area, (facility operator), owns these facilities. The work shall consist of either building up or lowering or resetting the casting by removing the existing frame and cover building up or decreasing the existing installation, replacing the frame and/or cover if damaged or worn out, as determined by the Resident Engineer, with a new frame and/or cover furnished by the owner, and setting the frame and cover to new elevation. The work shall be performed in accordance with the contract plans, specifications and at the directions of the Resident Engineer.

2. Materials:

The facility operator shall furnish and deliver all new hardware parts required. The Contractor shall furnish materials such as mortar, bricks and concrete in compliance with contract requirements. At locations where high-early strength concrete is required under this contract to be placed adjacent to gas facilities, then the requirement for concrete shall be high-early strength complying with the current New York State Department of Transportation, Standard Specifications for Class F concrete. Existing castings may be replaced as required and deemed necessary by the Engineer and by City rules and regulations. The Contractor shall install the new castings of various sizes furnished by the facility operator. The Contractor shall notify the facility operator of the installation schedule at least three (3) business days before materials are required on the site and, shall provide off-loading services to the facility operator. Should the facility operator fail to deliver the necessary material according to any schedule mutually agreed upon by the Contractor and facility operator, the City shall not be responsible for any delays attributable thereto, nor for the failure of delivery of such materials. Such delays shall be a matter of adjustment between the Contractor and the facility operator. On project where material storage is not permitted on site, the facility operator shall deliver the required material to the Contractor's yard and it shall be the Contractor's responsibility to transport the material to the work site when needed for installation. It shall also be the Contractor's responsibility to inspect the materials to be installed by him, immediately upon delivery and advise the facility operator through its authorized representative, of all damaged materials. The Contractor at no additional expense to the City or the facility operator shall replace any material that is damaged or lost after the Contractor's inspection.

3. Methods Of Construction:

The Contractor shall remove and reinstall existing castings or install new castings to the proposed grade. Setting and resetting the castings shall be done with mortar and brick according to the standards of the facility operator. Work shall be performed in a workmanlike manner. Castings that are deemed unacceptable for resetting shall remain the property of the facility operator and he shall be responsible for their removal and proper disposal from site. No traffic shall be allowed on adjusted street hardware until permitted by the Engineer.

4. Method Of Measurement:

The Contractor shall be paid for each gas hardware adjusted to grade regardless of size or adjustment height requirements (up or down).

5. Price To Cover:

The unit price bid for this item shall include all additional labor, supervision, insurance, equipment and, material (except those to be provided by the facility operator), required to adjust each gas hardware to grade as required in the contract plans and specifications. The bid price shall also include the removal of existing frames and covers from existing facilities; building up the existing installations with bricks and mortar, or lowering the existing installation by removing bricks and mortar; replacing damaged frames and/or covers with new frames and/or covers furnished by the facility operator; setting the frames and covers to the new elevations; protect existing installations; repair minor structural damages to existing installations prior to resetting frames; unloading of furnished castings at the Contractor's yard and transporting castings from the Contractor's yard to the job site as required; completing the work in

accordance with the contract plans, specifications and, at the directions of the Engineer. In addition the bid price shall include "chipping" around existing gas facilities using appropriate means and methods where grinding is required.

SECTION 6.06 - Special Care Excavation And Backfilling.

1. Description:

Under this section, the Contractor shall provide all labor, materials, equipment, insurance and incidentals required to support and protect the integrity of live gas facilities including mains, services, related structures and appurtenances during excavations. The gas company operating in the area, (facility operator), owns these facilities. The work shall be performed in accordance with the contract plans, specifications and at the directions of the Resident Engineer in consultation with authorized representatives of the facility operator.

2. Applicability Of Section:

This section shall apply to live gas facilities of various sizes located within two (2) feet of any face of unsheeted excavation, (unsheeted excavation refers to any excavation performed for city work and includes excavations performed that are to be subsequently sheeted using approved methods) and paralleling or, encroaching any face of excavation. Also, for crossings greater than forty-five (45) degrees and/or located at a cover depth greater than five (5) feet from existing street surface. Parallel facilities are not exposed at any time during excavation (See "Gas Cost Sharing Work Standard Sketch No. 5"). Encroaching facilities are partially exposed inside the limit of excavation (See "Gas Cost Sharing Work Standard Sketch No. 5"). This section shall also apply to gas facilities crossing catch basins excavation, and catch basins sewer connections (chutes) trench excavation only when extra depth (covered in other section), is not required for chutes installations because of such utilities interferences (See "Gas Cost Sharing Work Standard Sketch No. 3"). This section shall also apply to gas services (if shown or otherwise listed in contract documents) crossing unsheeted excavations for water mains, gas facilities crossing fire hydrant branch connections, house sewer and/or water service connections excavations. This section shall also apply for so called "loss trench", as described further, and for additional excavation (pavement and/or soil), backfilling, compaction, roadway base and pavement restoration due to abandoned gas facilities, only if removed by Contractor. If operating status of gas facilities cannot be determined prior to excavation then such facilities shall be considered live and this section shall fully apply. The excavation around fully exposed live gas facilities along and within limits of excavation (not crossings) shall be covered by this section also (not shown on "Gas Cost Sharing Work Standard Sketch No. 5"), however the support requirement, if any is required, of such facilities is beyond the scope of these specifications and therefore shall be the responsibility of facility operator to determine and prescribe, at no cost to the City contract, but shall be a matter of adjustment between the Contractor and facility operator.

3. Payment Restriction:

No special care excavation shall be paid for abandoned gas facilities paralleling and/or encroaching excavation and therefore are not in direct interference with City work. Except as allowed in this section, the bid item specified under this section shall not be used in combination with items covered under other sections for work done due to a particular gas facility. This item shall not be paid for new gas facilities when trenching for such new facilities has been performed by the Contractor of record in common with trench excavation for City Work (overlapping trench limits). The cost of excavating with care as defined in this section shall be deemed included in the cost of trench excavation for the new gas facilities. This restriction shall apply even if such gas common trench excavation is not part of the contract. If facilities are in direct interference with City work, meaning that "Minimum Clearances" described in "General Provisions; Gas Cost Sharing Work Paragraph No. 8" cannot be maintained and excavation has to be temporarily or permanently abandoned then this particular location shall become a test pit and dealt with as specified in Section 6.07 and "General Provisions; Gas Cost Sharing Work Paragraphs Nos. 2 and 8".

4. Method Of Construction:

All excavation in the vicinity of gas facilities shall be as required by NYS Industrial Code 753. Where these facilities are paralleling and located two (2) feet or less from the limits of the proposed excavation, the Contractor shall use hand excavation methods (pick and shovel or hand held power tools) to ascertain

the clearances of these facilities with respect to the proposed excavation. Once the location of these facilities with respect to the proposed excavation is verified to the satisfaction of the Resident Engineer, the Contractor shall then proceed with a combination of hand and machine excavation as required preserving the integrity of the facilities. The installation of timber supports or underpinning, when soil foundation cannot fully support partially exposed pipes, may be required to prevent pipe movement as directed by the Resident Engineer.

5. Method Of Payment:

The unit price for this work item shall be based on cubic yard (CY) of average excavation with care and, is to be considered as an incremental cost for performing City work with gas facilities interferences.

6. Method Of Measurement:

A. For Paralleling Facilities: Volume calculated as: Depth as measured from existing street surface to the bottom of unsheeted trench excavation allowable by OSHA regulations, multiplied by, the width measured as one (1) foot from the face of excavation toward the center of excavation, multiplied by the length of parallel facility, divided by twenty-seven (27) cubic feet per cubic yard (See "Gas Cost Sharing Work Standard Sketch No. 5"). The gas facility is no longer considered to be in interference once sheeting has been installed, therefore no further compensation for paralleling facilities as described above will be made.

B. For Encroaching Facilities: Volume calculated as: Depth of trench as allowable by OSHA, maximum up to five (5) feet multiplied by, the width of partially exposed pipe plus one (1) foot, multiplied by the length of facility encroachment, divided by twenty-seven (27) cubic feet per cubic yard (See "Gas Cost Sharing Work Standard Sketch No. 5").

C. Fully Exposed Gas Facilities: (Not shown on "Gas Cost Sharing Work Standard Sketch No. 5") along and inside trench and/or crossing trench at an angle greater than forty-five (45) degrees and/or a cover depth greater than five (5) feet from the existing street surface. The volume shall be measured as the depth of trench excavation multiplied by the distance measured along the sheeting line between two (2) points of intersections of the gas facilities and the sides of trench excavation, multiplied by the width of trench excavation.

D. For Additional Excavation And Restoration Due To So Called "Loss Trench", When The Integrity Of Pavement And Soil Above And Around Existing Live Gas Facilities Cannot Be Maintained Due To Its Lack Of Cohesiveness: Volume shall be calculated as: Depth of unsheeted trench excavation multiplied by width measured as distance of facility from closest edge of unsheeted excavation plus, width of facility proper plus, one (1) foot or a maximum width of three (3) feet multiplied by length of facility fully exposed divided by, twenty-seven (27) cubic feet per cubic yard (not shown on "Gas Cost Sharing Work Standard Sketch No. 5").

E. For Facilities Crossing Excavation For Catch Basins, Or Chutes Installations (When NYCDEP Funded) Or Fire Hydrant Branch Connections, Or Unsheeted Water Main Trench, Or House Sewer And/Or Water Services: Volume calculated as: Depth as measured from existing street surface to the bottom of the trench excavation multiplied by, the width taken as the outside diameter of pipe or the width of structure plus one (1) foot on either side (two (2) feet), multiplied by, the length of exposed facility crossing the trench, divided by twenty-seven (27) cubic feet per cubic yard (not shown on "Gas Cost Sharing Work Standard Sketch No. 5").

Overlapping volume dimensions measured as described above may occur when multiple facilities are paralleling excavations, encroaching excavations or crossing catch basins and catch basin chute installations. In such cases, all such facilities shall be counted as one limited by the extreme pipes, faces (See "Gas Cost Sharing Work Standard Sketch No. 2"). The volume shall then be calculated as described above.

7. Price To Cover:

The bid price shall also cover all additional supervision, labor, material, equipment and insurance necessary to excavate while protecting and maintaining (excluding supports for fully exposed live gas) gas facilities without disruption of service to the public and in accordance with contract specifications. The

price shall also include, changes of sheeting method and excavation width configuration where necessary to accommodate gas facilities in their existing locations; difficulties during the installation of catch basins, chute connections, hydrant branch, and house sewer and water connections under or over gas facilities; loss of productivity due to slower rate of excavation (special care) during excavation, including the use of such methods as: hand excavation around existing single and multiple facilities, extra excavation and backfilling due to lost trench because of existing and adjacent gas facilities, compaction, removal of sheeting from the facilities, extra roadway base restoration and temporary pavement, associated maintenance and protection of traffic, barricades, and traffic plates that may be required to temporarily close and/or complete the work.

SECTION 6.07 - Test Pits For Gas Facilities.

1. Description:

Under this section, the Contractor shall furnish all labor, materials, insurance, equipment and appliances necessary to excavate, sheet and, maintain test pits at locations approved by the Resident Engineer in consultation with the facility operator. Test pits shall be dug in order to ascertain exact locations, cover and invert elevations, clearances, alignment and operating status (live or dead) of existing gas facilities. The Contractor shall inspect jointly with the Resident Engineer and facility operator, gas facilities and other structures uncovered, take all relevant measurements and elevations as directed by the Resident Engineer. Tests to determine operating status of gas facilities shall be performed by facility operator. The pits shall be covered with steel plates during daytime nonworking hours, and uncovered, as required, until the inspection work is completed. Testing of gas facilities may require a maximum of four (4) hours. Then, the pits shall be backfilled with clean fill, and resurfaced with temporary pavement. All traffic shall be maintained and all safety measures as stipulated shall be complied with.

2. Methods Of Construction:

A. Excavation: Existing pavement to be removed shall be neatly cut along lines of removal with a saw or other approved equipment which leaves a neat straight joint line along the juncture with subsequently replaced pavement. Excavation in the vicinity of utilities and other structures shall be performed using hand tools. Use of hand operated pneumatic and electric jackhammers will be permitted only for breaking pavement and removal of masonry, concrete and boulders, or as otherwise directed by the Resident Engineer. The Contractor shall properly dispose of all materials excavated from test pits away from site. Test pits shall be excavated at locations shown on the contract drawings or as directed by the Resident Engineer. Additional test pits may be required and shall be excavated where required, as ordered by the Resident Engineer. All test pits shall be excavated to a depth and size necessary to locate the existing facilities. Sheeting shall be used when depth of excavation exceeds five (5) feet. The sheeting required shall be furnished and installed in full compliance with the State of New York and Federal Safety Codes requirements and as specified in contract, whichever is more stringent. Care shall be taken that no existing gas facilities or other structures are broken or damaged. All broken or damaged facilities shall be reported immediately to facility operator who shall decide whether such facilities shall be repaired or replaced by company forces or by City contractor and in conformance with "General Provisions; Gas Cost Sharing Work Paragraph No. 9". Contractor shall excavate all material encountered, including large masses of concrete, cemented masonry and boulders, as directed by the Resident Engineer. Any type of excavation protection used, shall satisfy the following:

   (a) Industrial Code Rule 753.
   (b) Prevent injury to workers and the public, and avoid damage to existing water, sewer, and gas pipes or other structures, and to pavements and their foundations, through caving or sliding of the banks of the excavation.

   Should it become necessary, as determined by the Resident Engineer, to enlarge any test pit in any dimension after sheeting has been placed, the Contractor shall remove portions of the sheeting, as necessary, enlarge the test pits as directed, and replace the sheeting without additional compensation for this work other than for the additional volume of material excavated.

B. Maintenance Of Test Pits: Excavated test pits shall be maintained free of debris and kept dry by the Contractor in order to permit the inspection and measurements and to determine the locations of

facilities. In order to accomplish this, Contractor shall, upon completion of excavation and placement of sheeting (if depth greater than five (5) feet), furnish and install adequate steel plates and posting over the excavated pits and shall temporarily remove all equipment debris and workers, and relocate barricades in order to open the full width of street to traffic during nonworking hours. The Contractor shall then, at no additional cost, relocate such barricades, barrels, cones and other warning devices and remove steel plates, as and when directed by the Resident Engineer to facilitate the inspection of exposed facilities. When work is being performed and the pits are not covered with steel plates, the Contractor shall provide complete and safe access to the test pits as may be required, and he shall provide construction barricades and maintain traffic at all times as shown or as directed by the Resident Engineer. Upon completion of test pit inspection by the Resident Engineer, the pit shall be backfilled by the Contractor as specified in contract, except that backfill material shall conform to contract specifications for such purpose.

C. Pavement And Sidewalk Restoration: After backfilling is completed, the Contractor shall construct a temporary pavement consisting of a minimum of four (4) inches thick asphaltic concrete mixture in roadway areas or a two (2) inches thick asphaltic concrete mixture in sidewalk areas in order to maintain existing pedestrian and vehicular traffic. This temporary pavement shall be maintained until permanent pavement and sidewalk replacement is constructed as specified in contract.

3. Measurements:

The quantity to be measured for payment shall be the number of cubic yards of material removed from within the limits of the pit dimensions as directed by the Resident Engineer. The volume occupied by existing pipes or other structures remaining within the maximum payment lines will not be deducted from the total volume measured except, where the cross sectional area of these facilities exceeds four (4) square feet. As determined by the Resident Engineer, the quantity measured for payment may be proportionate to a fair and reasonable estimate of gas responsibility in the total volume excavated.

4. Price To Cover:

The contract price bid per cubic yard for test pits shall cover all additional costs of labor, material, insurance, equipment, appliances and incidentals required to excavate test pits, including removal and disposal of excavated materials, sheeting, steel plating, backfill, compaction and temporary pavement and sidewalk restoration all in accordance with the specifications and as directed by the Resident Engineer. The price shall also include the cost of providing safe access to the excavation by facility operator for the performance of certain test to determine operating status of gas facilities prior to City work. The price shall also include support and protection of all gas facilities crossing excavation, paralleling and/or encroaching any face of excavation.

GAS COST SHARING STANDARD SPECIFICATIONS
SCHEDULE GCS-A

Average rate charged by utility companies to Disconnect and Reconnect Gas Services:

1. National Grid - $586.90 per Service/and Visit
2. Con Edison - $524.00 per Service/and Visit

IV - STANDARD SKETCHES; GAS COST SHARING WORK

Hereinafter attached are the following Standard Sketches for Gas Cost Sharing Work:

Sketch No. 1 - Support Requirements For Gas Mains And Services Crossing Excavation Greater Than 4' - 0" Wide At Any Angle

Sketch No. 1A - Support Requirements For Gas Mains Over 16" Diameter Up To And Including 48" Diameter Crossing Excavation At Any Angle

Sketch No. 2 - Typical Methods Of Measurement For Gas Crossings

Sketch No. 3 - Utility Crossings During Catch Basin Chute Connection Pipe Installation

Sketch No. 4 - Utility Crossings During Catch Basin Chute Connection Pipe Installation (Extra Depth)

Sketch No. 5 - Gas Main Encroachment On And/Or Parallel To Excavation Of Unsheeted Trench

GAS COST SHARING WORK (SKETCH NO. 1)

SUPPORT REQUIREMENTS FOR GAS MAINS AND SERVICES CROSSING EXCAVATION GREATER THAN 4'-0" WIDE AT ANY ANGLE

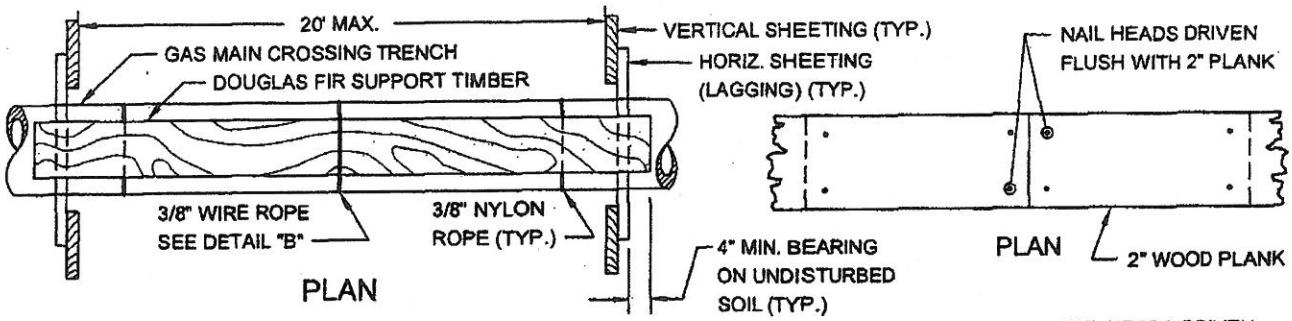

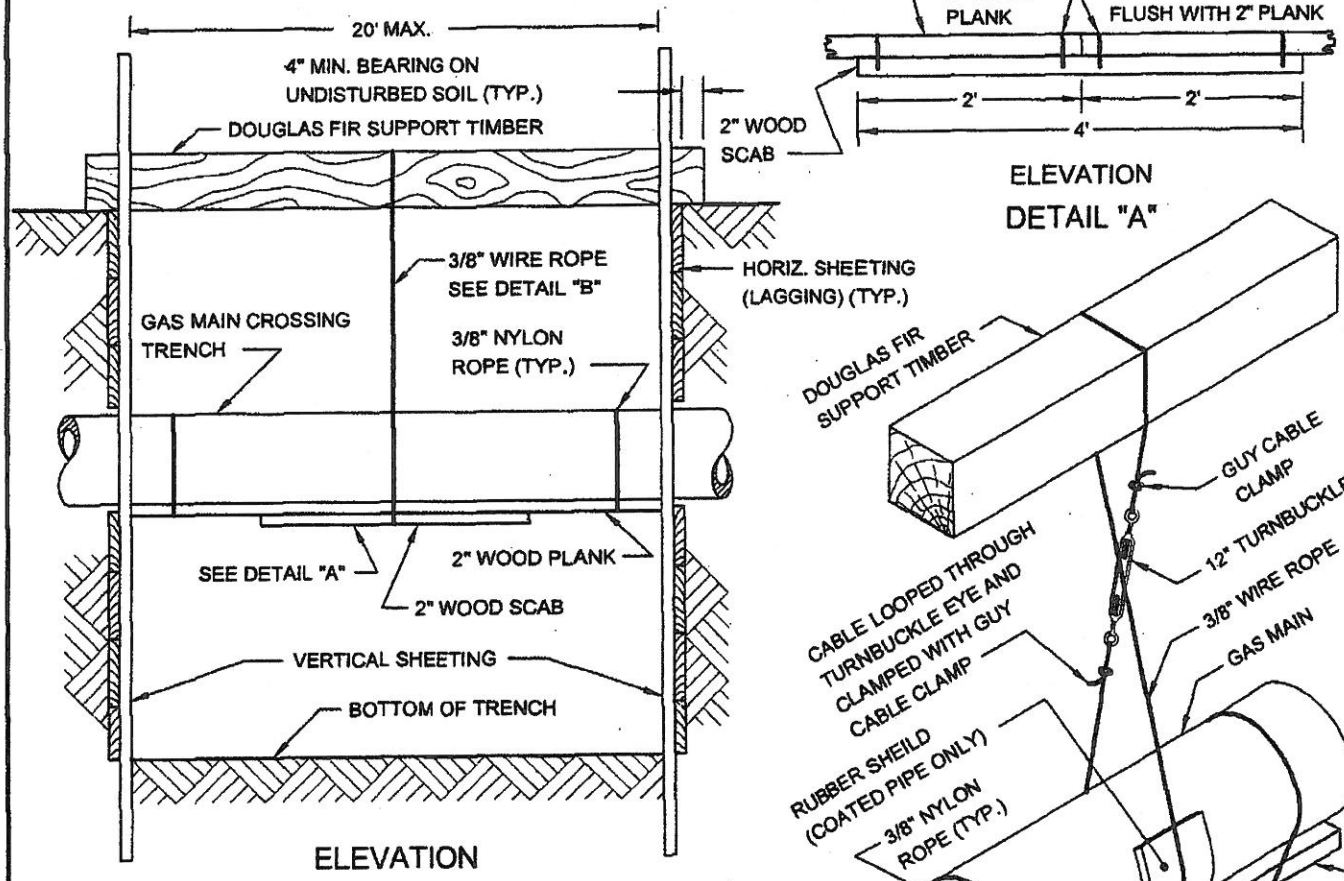

CABLE SUPPORT		TIMBER SUPPORT	
MAIN TYPE	SPACING	MAIN SIZE	TIMBER SIZE
CAST IRON	4' O.C. MAX.	UP TO 6"	6" X 6"
STEEL	10' O.C. MAX.	8" TO 10"	8" X 8"
PLASTIC	10' O.C. MAX.	12" TO 16"	10" X 10"

REVISED OCT. 2004 - L. ADRIEN
REVISED JUNE 1998 - J. WONG / W. PATALANOP. MOV

GAS COST SHARING WORK (SKETCH NO. 1A)

SUPPORT REQUIREMENTS FOR GAS MAINS OVER 16" DIAMETER UP TO AND INCLUDING 48" DIAMETER CROSSING EXCAVATION AT ANY ANGLE

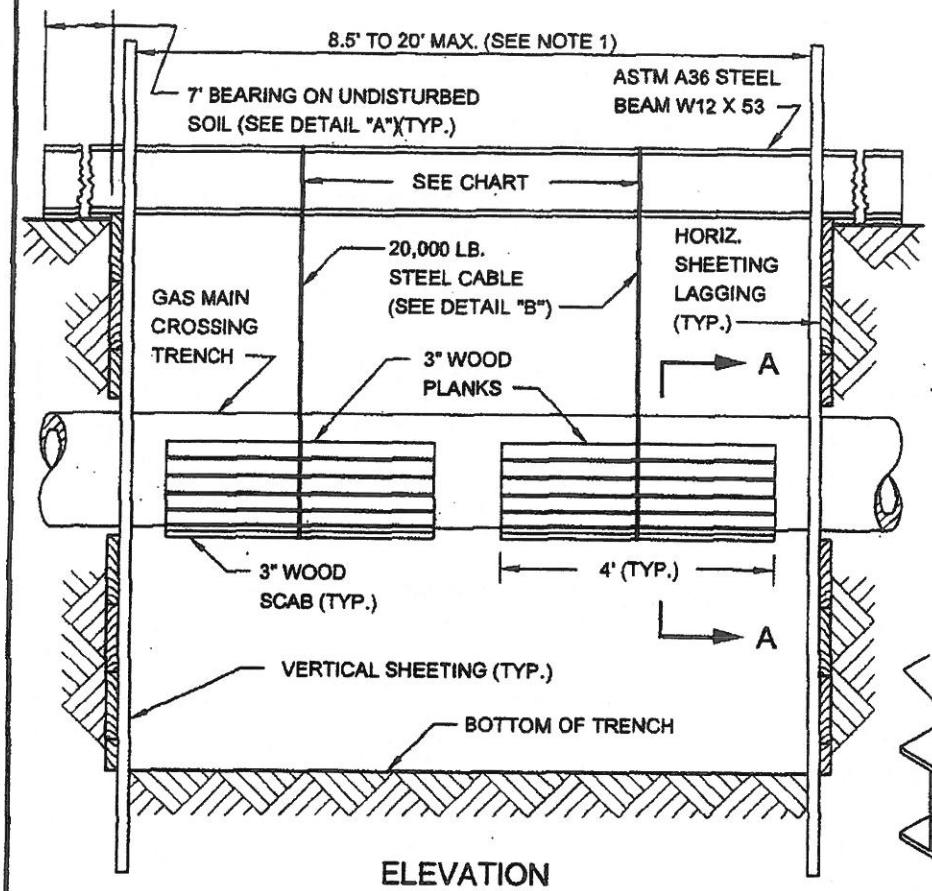

ELEVATION

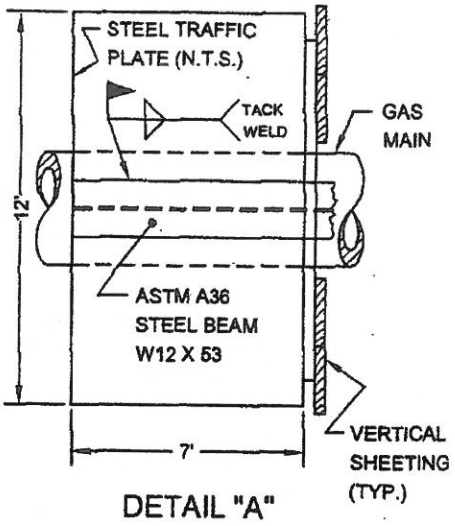

DETAIL "A"

CABLE SUPPORT	
MAIN TYPE	SPACING
CAST IRON	4' O.C. MAX.
STEEL	10' O.C. MAX.

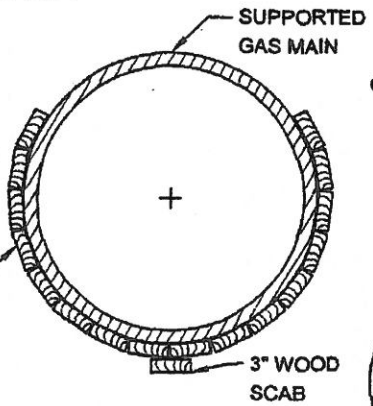

SECTION A-A

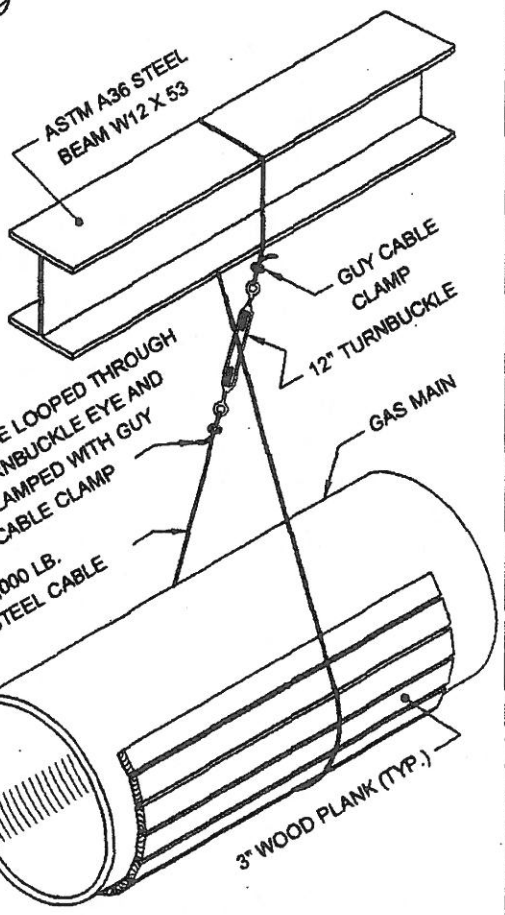

DETAIL "B"

NOTES:

(1) NO SUPPORT IS REQUIRED FOR GAS MAINS OVER 16" DIA. UP TO AND INCLUDING 48" DIA. CROSSING TRENCHES LESS THAN 8.5' WIDE.

(2) UNDERMINE A MAXIMUM OF 8.5 L.F. OF CAST IRON GAS MAIN AT A TIME.

(3) SET STEEL CABLE OVER 3" WOOD PROTECTIVE PLANKS AND PLACE AN ADDITIONAL 3" SCAB ON THE BOTTOM OF THE GAS MAIN.

(4) ADJUST STEEL CABLE UNTIL DEAD WEIGHT OF THE UNDERMINED GAS MAIN HAS BEEN TAKEN UP BY THE OVERHEAD STEEL BEAM SUPPORT.

(5) ALL SUPPORTS AND STEEL CABLES CAN BE REMOVED ONLY AFTER THE REQUIRED BACKFILL (AROUND AND BELOW GAS MAIN) HAS BEEN COMPACTED IN ACCORDANCE WITH NEW YORK CITY STANDARDS AND AT THE DIRECTIONS OF THE ENGINEER.

REVISED 0[illegible]04 - J. ADRIEN
REVISED JUNE 1998 - J. WONG / W. PATALANOP. MOY

GAS COST SHARING WORK (SKETCH NO. 2)

TYPICAL METHODS OF MEASUREMENT FOR GAS CROSSINGS

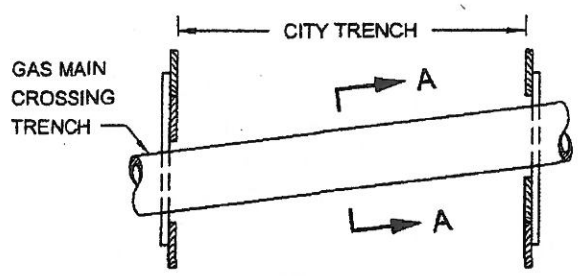

SINGLE FACILITY CROSSING

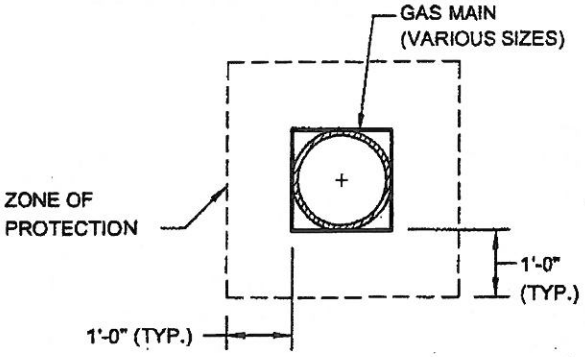

SECTION A-A

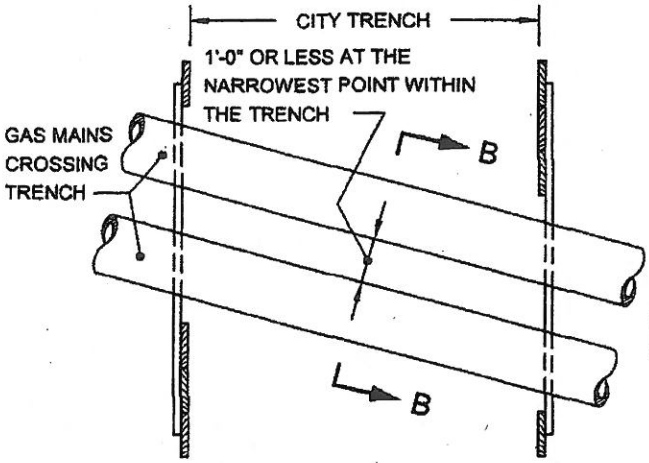

MULTIPLE FACILITIES
(GAS MAINS AT SAME ELEVATION)

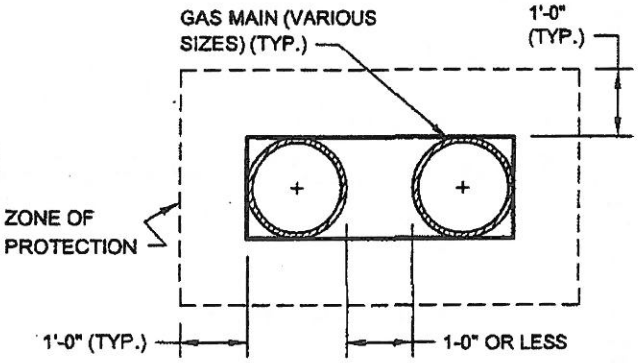

SECTION B-B

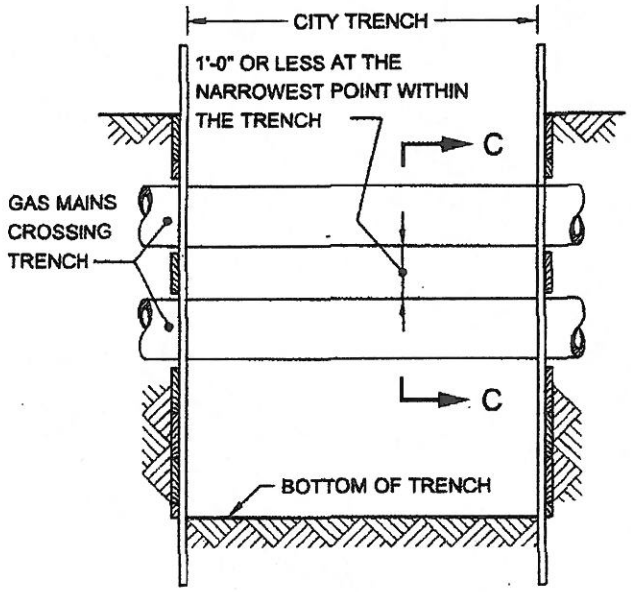

MULTIPLE FACILITIES
(ONE CROSSING AT DIFFERENT ELEVATIONS)

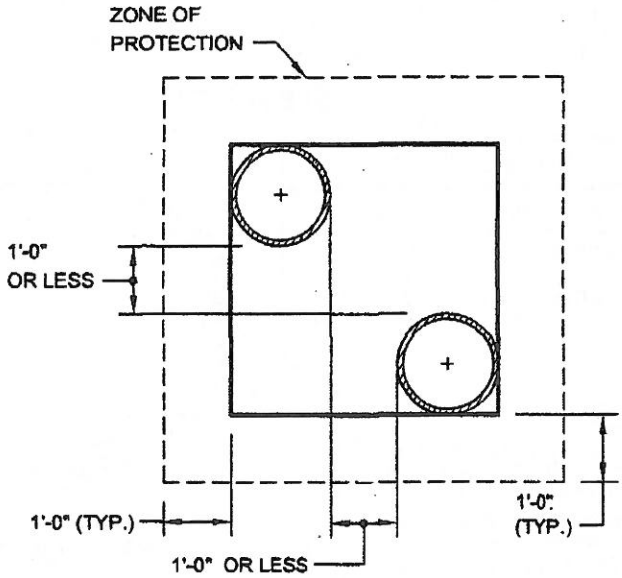

SECTION C-C

NOTE:

GAS MAINS MAY OR MAY NOT BE PARALLEL TO EACH OTHER.

REVISED SEPT. 2004 - J. ADRIEN
REVISED SEPT. 2004 - J. WONG/W. PATALANO/P. MOY

GAS COST SHARING WORK (SKETCH NO. 3)

UTILITY CROSSINGS DURING CATCH BASIN CHUTE CONNECTION PIPE INSTALLATION

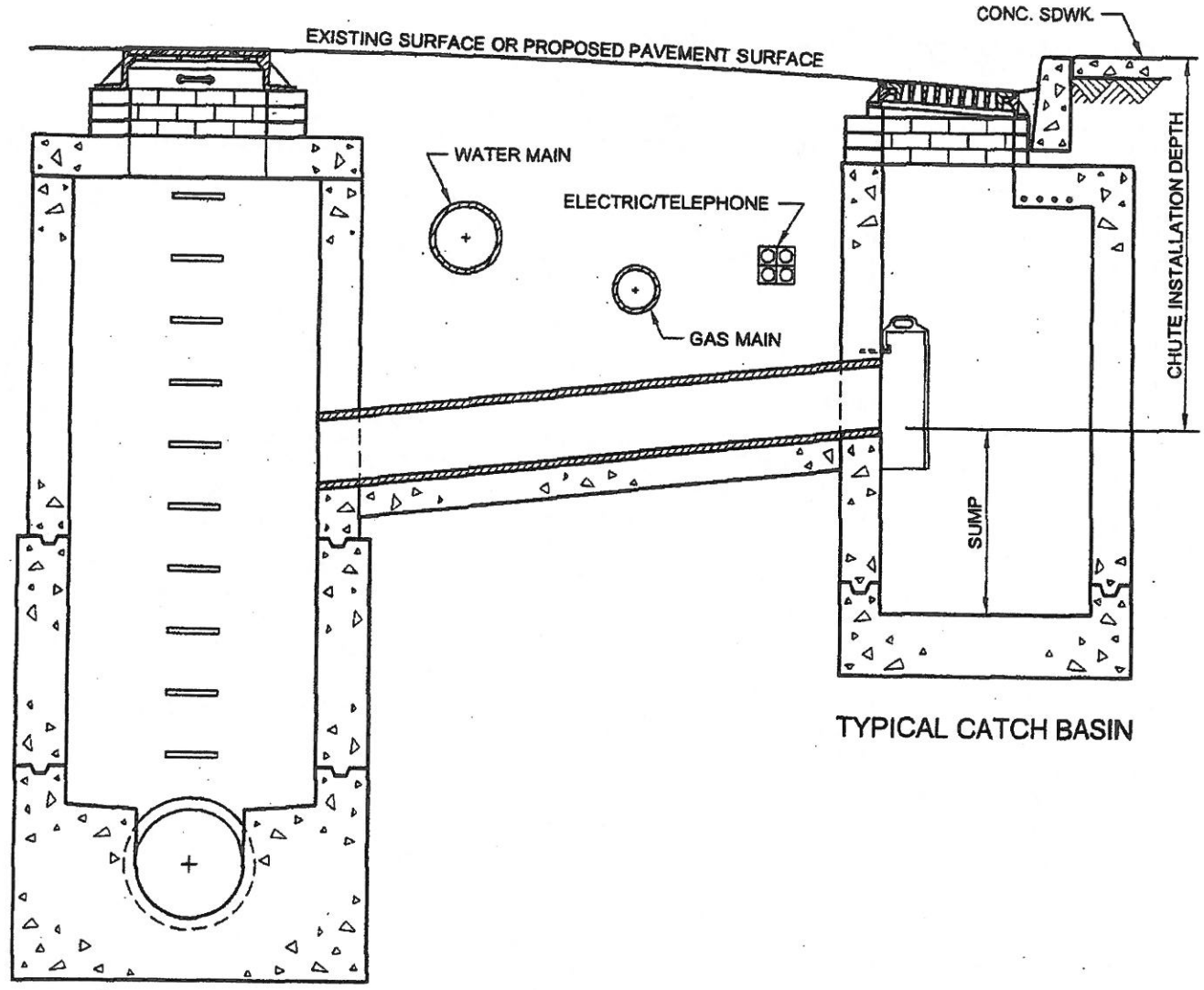

TYPICAL CATCH BASIN

TYPICAL SEWER MANHOLE

REVISED Oct., 2004 - L. ADRIEN
REVISED OCT. 1988 - J. WONG/W. PATALANO/P. MOY

GAS COST SHARING WORK (SKETCH NO. 4)

UTILITY CROSSINGS DURING CATCH BASIN CHUTE CONNECTION PIPE INSTALLATION (EXTRA DEPTH)

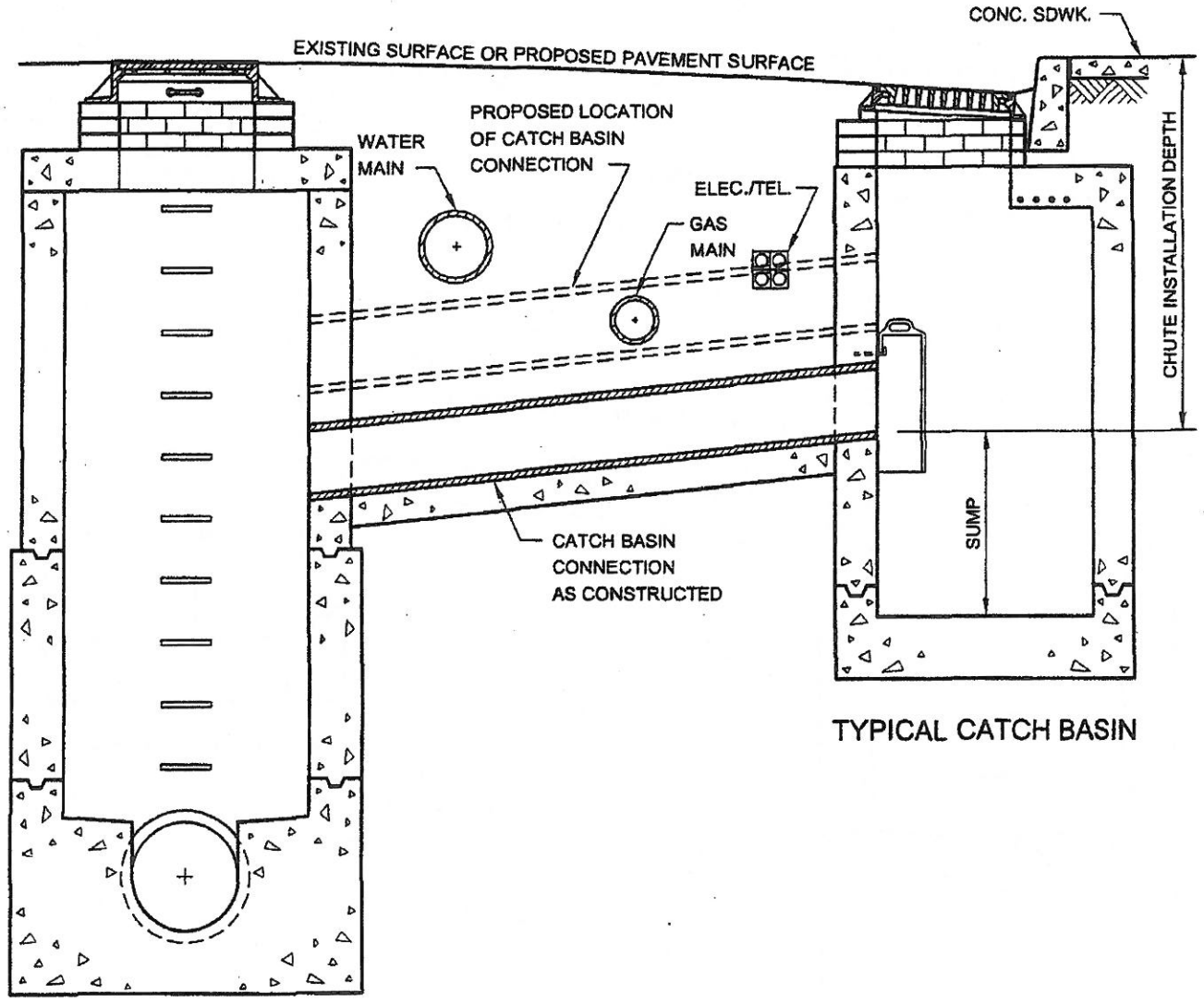

TYPICAL CATCH BASIN

TYPICAL SEWER MANHOLE

REVISED OCT. 2004 - L. ADRIEN
REVISED OCT. 1998 - J. WONG/W. PATALANO/P. MOY

GAS COST SHARING WORK (SKETCH NO. 5)

GAS MAIN ENCROACHMENT ON AND/OR PARALLEL TO EXCAVATION OF UNSHEETED TRENCH

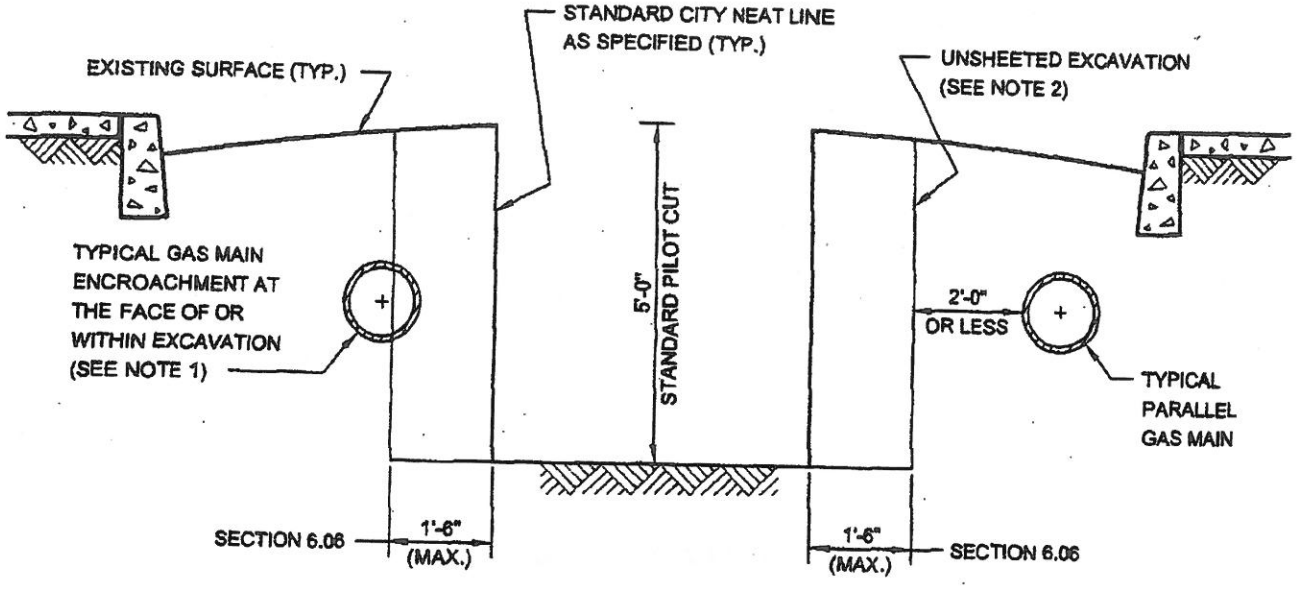

NOTES:

(1) GAS MAIN LOCATED AS SHOWN MAY HAVE TO BE REMOVED BY THE FACILITY OPERATOR PRIOR TO THE START OF CITY EXCAVATION, OTHERWISE, THE CONTRACTOR WILL BE PAID UNDER SECTION 6.06 FOR THE SAID WORK. IF GAS MAIN IS ABANDONED THEN SECTION 6.03 SHALL APPLY.

(2) EIGHTEEN (18) INCHES FROM STANDARD NEAT LINE IS THE MAXIMUM ALLOWABLE WIDTH OF AREA THAT MAY BE DISTURBED OR EXCAVATED DURING INSTALLATION OF CERTAIN TYPES OF SHEETING SYSTEMS THAT MEET THE REQUIREMENTS OF THE STANDARD SPECIFICATIONS OF THE DEPARTMENT OF DESIGN AND CONSTRUCTION OF THE CITY OF NEW YORK.

REVISED 2004 - J. ADRIEN
REVISED Oct. 1998 - J. WONG/W. PATALANO/P. MOY

NO TEXT THIS PAGE

V - PRELIMINARY GAS WORK TO BE PERFORMED BY FACILITY OPERATOR.

APPLICABLE TO ALL GAS DRAWINGS:

- ALL RELOCATION WORK SHOWN IN THIS ADDENDUM IS TO BE PERFORMED BY FACILITY OPERATOR.
- ALL SUPPORT AND PROTECTION WORK TO BE PERFORMED BY CITY CONTRACTOR
- IF ADDITIONAL INFORMATION IS NEEDED REGARDING THE FACILITY OPERATOR'S RELOCATION WORK, THE CONTRACTOR IS ADVISED TO CONTACT THE GAS COMPANY REPRESENTATIVE:

NATIONAL GRID
287 MASPETH AVE
BROOKLYN, NY 11201
GERARD P. LUNDQUIST
TEL: (718) 963-5506

(NO TEXT IN THIS AREA, TURN PAGE)

nationalgrid

CONTRACT# QED1007

GAS MAIN INSTALLATION

ITEM#	ON STREET	1ST X-STREET	2ND X-STREET	SIZE/MAT'L	FOOTAGE	PRESSURE	REMB
	Rockaway Beach Blvd	Beach 54 St		4" PI	300'	H	Y
	Beach 53 St	Rockaway Beach Blvd		8" PI	100	H	Y
	Rockaway Beach Blvd	Beach 50 St	Beach 53 St	4" PI	100	H	Y

GAS MAIN RETIREMENT

ITEM#	ON STREET	1ST X-STREET	2ND X-STREET	SIZE/MAT'L	FOOTAGE	PRESSURE	REMB
	Rockaway Beach Blvd	Beach 54 St		4" PI	300'	H	Y
	Beach 53 St	Rockaway Beach Blvd		8" PI	100'	H	Y
	Rockaway Beach Blvd	Beach 50 St	Beach 53 St	4" PI	100'	H	Y

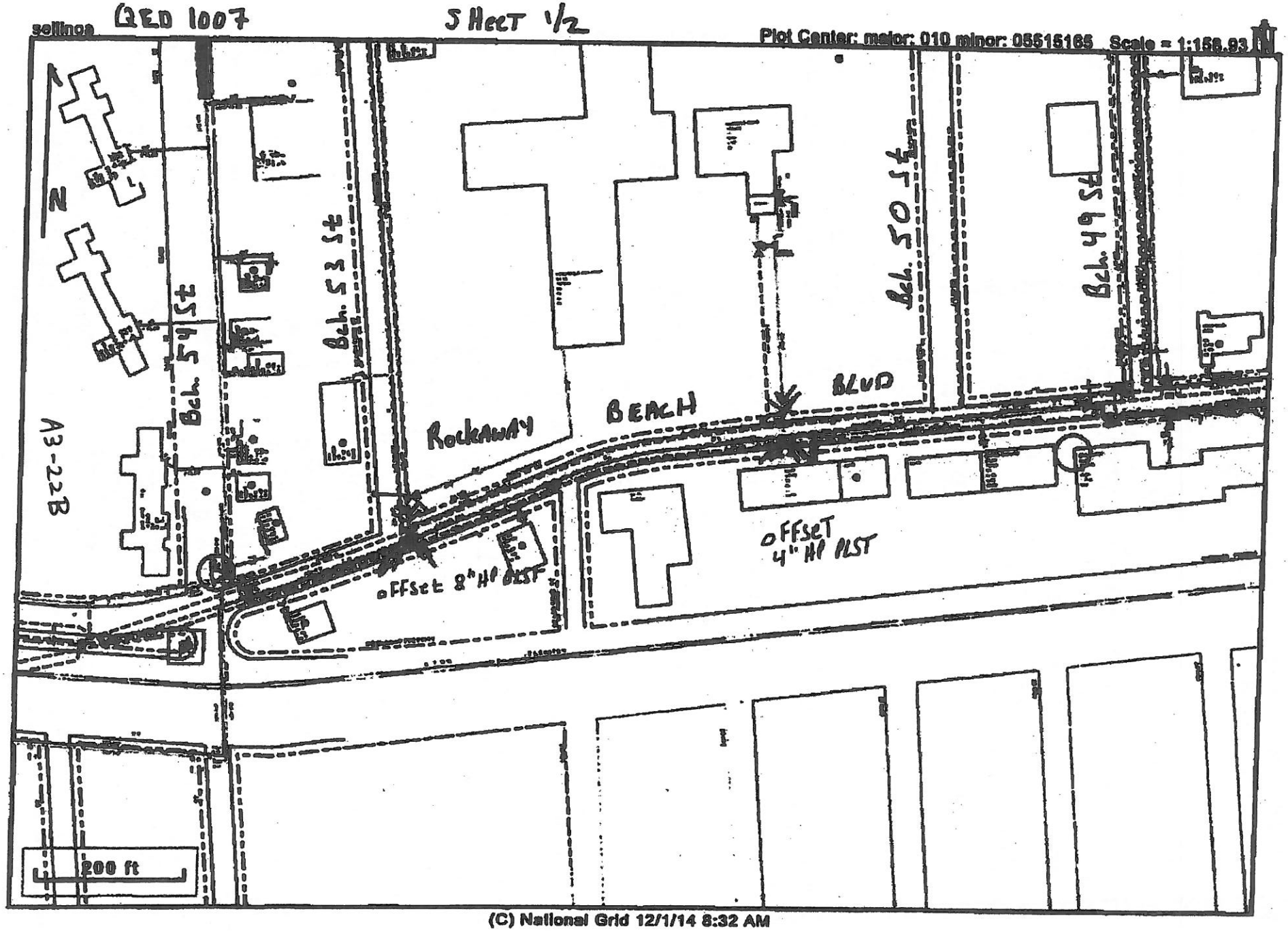
selinos
QED 1007
SHEET 1/2
Plot Center: major: 010 minor: 05515165 Scale = 1:168.93
N
Beh. 54 St
Beh. 53 St
Beh. 50 St
Beh. 49 St
ROCKAWAY
BEACH
BLVD
A3-22B
OFFSET 8" HP OLST
OFFSET 4" HP NLST
200 ft
(C) National Grid 12/1/14 8:32 AM

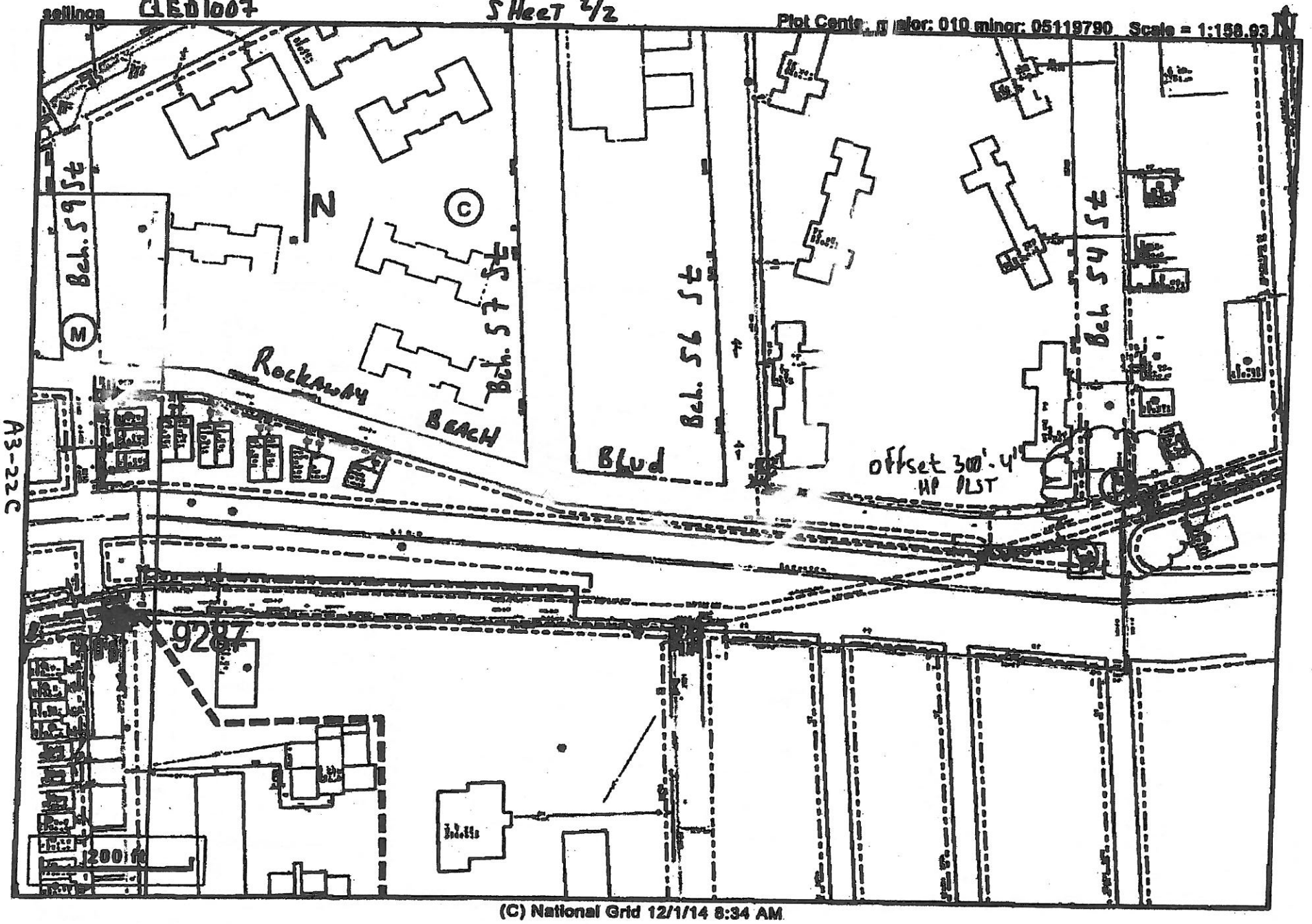
sellinca
QED1007
Sheet 2/2
Plot Center: major: 010 minor: 05119790 Scale = 1:158.93
N
Bch. 59 St
Bch. 57 St
Bch. 56 St
Bch. 54 St
Rockaway Beach Blvd
offset 300'-4" HP PLST
9287
200 ft
(C) National Grid 12/1/14 8:34 AM

A3-22C

VI - LISTING OF APPROXIMATE LOCATIONS OF EP-7 BID ITEMS QUANTITIES

(NO TEXT IN THIS AREA, TURN PAGE)

SCOPE OF WORK
SUPPORT AND PROTECTION
FOR CONTRACT QED-1007

The City of New York Department of Design and Construction is proposing to install sewers and/or water mains and all appurtenances in various locations in The City of New York along with all work incidental thereto.

6.01.1 - Gas Main Crossing Sewer Up To 24" In Diameter. (Ea.)

5 in Rockaway Beach Blvd @ B 54 St.
2 in Rockaway Beach Blvd @ B 53 St.
1 in Rockaway Beach Blvd @ B 50 St.
1 in Rockaway Beach Blvd @ B 49 St.

6.01.9 - Gas Main Crossing Water Main Up To 20" In Diameter. (Ea.)

2 in Rockaway Beach Blvd @ B 54 St.
1 in Rockaway Beach Blvd @ B 53 St.
1 in Rockaway Beach Blvd @ B 50 St.
1 in Rockaway Beach Blvd @ B 49 St.

6.01.11 - Gas Main Crossing Water Main 36" Thru 42" In Diameter. (Ea.)

1 in Rockaway Beach Blvd @ B 54 St.
1 in Rockaway Beach Blvd @ B 53 St.
1 in Rockaway Beach Blvd @ B 50 St.
1 in Rockaway Beach Blvd @ B 49 St.

6.02 - Extra Excavation For The Installation Of Catch Basin Sewer Drain Pipes With Gas Interferences. (Ea.)

2 in Various Locations as Required.

6.03 - Removal Of Abandoned Gas Facilities. All Sizes. (L.F.)

4000 in Various Locations as Required.

6.03.1 - Removal Of Abandoned Gas Facilities With Possible Coal Tar Wrap. All Sizes.(L.F.) (For National Grid Work Only)

1000 in Various Locations as Required.

SCOPE OF WORK
SUPPORT AND PROTECTION
FOR CONTRACT QED-1007

The City of New York Department of Design and Construction is proposing to install sewers and/or water mains and all appurtenances in various locations in The City of New York along with all work incidental thereto.

6.04 - Adjust Hardware To Grade Using Spacer Rings/Adaptors (Street Repaving). (Ea.)

5 in Various Locations as Required.

6.05 - Adjust Hardware To Grade By Resetting (Road Reconstruction). (Ea.)

10 in Various Locations as Required.

6.06 - Special Care Excavation And Backfill. (C.Y.)

500 in various locations as required, including but not limited to all gas services crossing unsheeted water main trenches.

6.07 - Test Pits For Gas Facilities. (C.Y.)

30 in Various Locations as Required.

End of Addendum No. 3

This Addendum consists of thirty-five (35) pages.

THE CITY OF NEW YORK
DEPARTMENT OF DESIGN AND CONSTRUCTION
INFRASTRUCTURE DIVISION
BUREAU OF DESIGN

PROJECT ID: QED1007

FOR THE CONSTRUCTION OF TRUNK AND DISTRIBUTION WATER MAINS IN ARVERNE BOULEVARD BETWEEN BEACH 59TH STREET AND BEACH 54TH STREET; ROCKAWAY BEACH BOULEVARD BETWEEN BEACH 54TH STREET AND BEACH 49TH STREET; BEACH 67TH STREET BETWEEN ROCKAWAY FREEWAY AND ROCKAWAY BEACH BOULEVARD; ROCKAWAY BEACH BOULEVARD BETWEEN BEACH 54TH STREET AND BEACH 53RD STREET; AND ROCKAWAY BEACH BOULEVARD BETWEEN BEACH 52ND STREET AND BEACH 49TH STREET

INCLUDING STORM AND SANITARY SEWER WORK
Together With All Work Incidental Thereto
BOROUGH OF QUEENS
CITY OF NEW YORK

ADDENDUM NO. 4
(SECTION U VERSION 2.0)
DATED: June 23, 2015

1. The Contractor shall be responsible for compliance with all the provisions of the following Sections and Schedules, which are hereby made a part of the original contract documents:

   A. "SECTION U: Additional Contract Requirements Applying to Work Performed in the Presence of Privately Owned Utility Facilities" (Pages A4-3 through A4-13)

   B. Schedule U-1 (Page A4-14)

   C. Schedules U-2 listing scope of utility interferences is no longer included in City contract. Such information will be part of Interference Agreement between Utility Operator and Contractor.

   D. Section U-3 Page A4-15 (as per the Private Utilities reference document for SECTION U called "CET SPECIFICATIONS AND SKETCHES", dated November 2010).

2. Each facility operator shall provide inspectors at the work site to inspect methods of interference work, verify quantities and items of Utility Work, and coordinate all phases of the facility operator operations.

3. In addition, the following statements are made to provide clarification of various paragraphs under Section U:

   A. Section U, ¶3, requires the Contractor to immediately commence negotiations with each Company for an Interference Agreement under which the Company will compensate the Contractor for any Interference Work which the Company does not elect to perform with its own forces or by specialty contractors retained by the Company. Thus the Contractor is on notice that its work under the Contract may be affected by Interference Work performed by

(a) the Contractor pursuant to a separate Interference Agreement with the Company, (b) the Company, or (c) partly by each.

B. The City has no contract with any of the Companies for work on or adjacent to the site of work under this Contract, and the Companies are not "Other Contractors" as defined for the purposes of this Contract. The Contractor is reminded, however, that pursuant to Section U, ¶3, the City will not compensate the Contractor for any direct and/or indirect costs related to Interference Work, regardless of whether such Interference Work is covered by an Interference Agreement between the Contractor and the Company or is performed by the Company using its own forces or by specialty contractors retained by the Company.

C. Section U, ¶13, provides that the provisions of Section U are material provisions of the Contract and that the Contractor's failure to comply with the procedures set forth in Section U are sufficient for the Commissioner to declare the Contractor in default pursuant to Article 48 of the Contract.

Pursuant to this Addendum, the Contractor is informed that the Performance Bond required of the Contractor pursuant to the Contract is not deemed to guarantee performance of any of the Interference Work.

Section U: Additional Contract Requirements Applicable to Work Performed in the Presence of Privately Owned Utility Facilities

The Contractor is hereby notified that pursuant to the law and franchise agreements issued by the City, certain private utility and public service companies named in Schedule U-1 ("the Companies") own and/or operate surface and/or subsurface facilities within the limits of this contract. The existence of these facilities impacts the productivity of the City work called for in the contract. In order to improve coordination of the City construction with the private utility facilities owned and/or operated by the Companies named in Schedule U-1, Article 1.06.30 of the Standard Highway Specifications of the New York City Department of Transportation, Dated November 1, 2010; and/or Articles 10.15 through 10.18 of the Standard Sewer and Water Main Specifications of the New York City Department of Environmental Protection, Dated July 1, 2014; as applicable, are amended and will be implemented as follows:

1. Means and methods for City work:

a) The Contractor is hereby notified that the utility interferences may impact the performance of, and/or interferes with, City work. The contractor will be required to perform such utility work as directed by the Resident Engineer in order to clear all utility interferences from the project site as required for satisfactory completion of City work within specified contract schedule.

b) In areas serviced by overhead electric system, the contractor understands and by bidding for this contract agrees that he/she will be required to perform the public work in the presence of energized electrical overhead lines and appurtenances located in areas adjacent and/or within the project area. As a consequence he/she will select means and method of construction appropriate to maintain the safety clearances required or as permitted by electric operators in order to avoid damaging the insulation or shielding of these lines and also to prevent knocking them down.

2. Field inspection prior to construction:

Prior to the start of any contract work in areas serviced by overhead electric lines, and after the award to the apparent low bidder for this contract, the contractor must request a field walk of the project area along with the operator of the overhead electrical facilities and the DDC Engineer-In-Charge. At that time the facility operator will confirm the type and condition of

the overhead electrical lines and the sufficiency of their insulating properties with respect to the means and methods proposed by the contractor. The contractor must be prepared to describe in enough details his/her proposed means and methods of construction operations in order to anticipate the likelihood that electric lines insulation would be cut or otherwise compromised. Also such details will allow the facility operator to anticipate the need for added insulation and/or shielding of non-insulated lines.

3. Compensation for interference work:

Compensation for Interference Work is a matter of adjustment between the Contractor and each private utility company located within the limits of the project area and whose utility facilities are affected by City contract work. In particular, the City will not compensate the Contractor for any direct and/or indirect costs related to Interference Work, including, but not limited to, lost profit, increased overhead, or any other impact costs. Upon receipt of a Notice of Award from the City, the Contractor shall immediately commence negotiations with each of the Companies concerning the manner in which and the price for which the Contractor, through its own forces or by others hired by it, will perform and be paid by the Company for all necessary Interference Work as defined above, and at known locations of City contract work, that the Company(ies) choose(s) not to perform with its(their) own forces or by specialty Contractors hired by it (them) (as per "Interference Agreement"). (Specialty contractors' work is limited to (i) insulation installation and removal, (ii) live gas and steam work, (iii) cleanup and disposal of hazardous materials, (iv) splicing live electrical and telecommunications facilities, and (v) work not traditionally performed by general construction contractors.

4. Interference Agreement:

1. Although the parties may negotiate an Interference Agreement in any format or manner they deem fit, the Contractor is hereby advised that the Companies have indicated to the City that they will agree to compensate the Contractor on a unit price basis for Types of Interferences encountered on this Contract in accordance to the Private Utilities reference document for SECTION U called "CET SPECIFICATIONS AND SKETCHES", dated November 2010, copy of which is available on demand.
2. The Contractor shall notify the City upon concluding an Interference Agreement with each of the Companies.

5. City contract work to continue without Interference Agreement :

If, prior to the start of construction, as directed by the City's Order to work / Notice To Proceed (OTW/ NTP) date any of the Companies and the Contractor have not concluded an Interference Agreement as described above, then the City shall issue a written "48 Hours notice to Public Corporation" as prescribed by the City of New York Administrative Code", commonly referred to as "Order-Outs" and City construction will proceed as ordered and the Contractor will be directed by the Resident Engineer to perform the City work on Time, Material and Equipment basis (T&M) as specified in standard City contract agreement Article 26.2. T&M records will include identification of types of utility facilities interfering with City work, utility facility owners, specifying the nature and quantity of any materials, plant and equipment furnished or used in connection with the performance of such work and crew size, such as: name and number of each worker employed on such work. T&M records will also indicate the hours of active time, standby time and idle time. The Company (ies) and the Contractor will maintain separate records of the actual quantity and cost of labor, materials, and equipment expended, and will provide copies of this information to the other party on a daily basis for reconciliation. These T&M records along with cost evaluations will be submitted daily to the Resident Engineer for review and approval. The total cost of City work will be based on quantity of work performed multiplied by unit price contract bid items. The total interference cost will be calculated as the difference between the total T&M cost and total cost for City work. The Resident Engineer will conduct a monthly reconciliation session of the daily T&M records with the affected Company (ies) and contractor. If the contractor and affected utility companies cannot reconcile their T&M records, by the last day of each month, then the Resident Engineer will submit the approved City's T&M records along with total cost evaluations to the DDC Director of Construction who will review these records and recommend approval and validity certification by the DDC Deputy Commissioner.

1. Copies of the DDC approved and certified T&M records will then be transmitted by the DDC to the contractor and the utility companies. These certified records may be used by the contractor for compensation claims against the responsible private facility owners, or may be used by any party as supporting documentation in dispute regarding compensation for performing Interference Work. The contractor will be required to perform City work while invoices are submitted by the contractor to the Utility companies for payment within 30 days, or while compensation disputes

between contractor and affected company (ies) are submitted to Binding Arbitration process described in Paragraph 9.

2. All issues related to utility work and/ or delays due to compensation disputes or claims against utility companies are not allowable as justification for granting contract time extensions or delay claims against the City. The City may assess liquidated damages specified in the contract for net overall delays suffered by City contract work as a result of utility issues, disputes and claims.
3. The standard City contract dispute resolution process specified in Article 27 "Presentation of disputes to Commissioner", of the standard City contract agreement is not applicable to any disputes related to utility work and/ or compensation for such work or claim against utility companies. Utility work issues, disputes and claims may only be submitted to Binding Arbitration process described in Paragraph 9.
4. The contractor will notify the Resident Engineer when utility work that require the intervention of company utility specialty crews causes excessive contractor's labor and equipment standby or idleness and, thereby jeopardizing the City project schedule. The Resident Engineer will submit the facts to the DDC Director of construction who will recommend to the Deputy Commissioner regarding the issuance of a "48 hours notice" to the concerned utility company as authorized by the New York City administrative Code Section 19-143 and/ or Section 24-521 as applicable.
5. Utility delays caused by utility and/ or by unavailability of utility specialty crews cannot be discounted for earning any contractual bonus when such bonus clause is included in a contract. However, if such specified bonus is not earned or disallowed by the City or if the City assesses specified liquidated damages as a result of such excessive delays, the contractor may seek damages from the responsible utility company (ies).

6. Extra utility work with Utility Agreement:

If during construction the Contractor encounters utility facilities interferences or utility scope of work that it believes is not covered by the Interference Agreement as described above, then the Contractor shall immediately notify the Company in writing, with a copy to the City, describing the nature and location of the extra work in question. The Company then has five (5) business days to investigate the conditions and then:

1. Advise the Contractor and the City in writing that no interference with its facilities exists at the location in question, and hence that the Contractor may proceed with City work without providing for any impact from Company facilities;
2. Advise the Contractor and the City in writing that the Interference Agreement negotiated pursuant to Paragraph 4, provides for the scope of work encountered.
3. Advise the Contractor and the City in writing that it intends to perform the necessary utility Work with company forces or with its own contractor including, but not limited to, relocating its facility out of the way of the proposed City work. In this case, the Company shall provide a written schedule for the performance of the utility work it proposes to perform, which shall be subject to approval by the City based on its impact to the Contractor's currently approved progress schedule. Upon approval of the Company's schedule by the City, the Contractor shall provide access to the worksite to the Company and/or any contractors hired by it to perform this utility work. If necessary, the City may grant a contract time extension for delays caused by the performance of such utility work by the company.
4. Reasonably specify in writing the scope of work to be performed by the Contractor on behalf of the Company that is not covered under the Interference Agreement negotiated pursuant to Paragraph 5, including, but not limited to, relocating, supporting, and/or protecting the Company's facilities, and/or shifting the City facility if approved by the Resident Engineer, and/or otherwise changing its operations to work in the presence of the Company's facilities. Should the Company elect this option, it must adequately define and provide an initial price offer for the work required to be performed.

7. Means and Methods for utility work:

Upon receipt of the Company's determination pursuant to paragraphs 6.2, or 6.4, above, the Contractor shall determine reasonable means and methods of performing the work defined by the Company. These means and methods are subject to approval of the Company, which shall not be unreasonably withheld. If, however, the Company objects to the Contractor's proposed means and methods then it shall define an alternate method of construction. Upon receipt of the Company's approval or its proposed alternate method of construction, the Contractor shall

commence performance of the work defined by the Company as soon as possible, and shall perform the work in a good, workmanlike, and efficient manner, using the means and methods approved by the Company, in order to permit the City work to proceed in the most expeditious manner possible, but without imposing unreasonable and/or unnecessary costs on the Company. It is expressly understood by all parties that the City's rights pursuant to Article 4 of the Contract apply to Utility Work performed pursuant to this section.

8. Disputed utility work covered by a utility agreement:

The City Work will continue as described in paragraph 5 above. In the event of any dispute between the Company (ies) and the Contractor regarding any issue related to the performance of, or payment for, utility work, including, but not limited to, any indirect or impact costs incurred by the Contractor due to the Utility Work and/or to the existence of facilities owned or operated by the Company (ies) on the line of the work. The Company (ies) and the Contractor hereby agree to submit to each other a "Final Offer," in writing, by certified mail. Each party shall then have three business days to consider each other's Final Offer. In the event that neither party accepts the other's Final Offer within those three days, the Company (ies) and the Contractor agree to immediately submit the dispute to binding arbitration as described in Paragraph 9. During the pendency of any arbitration, the Company (ies) and the Contractor shall maintain separate records of the actual quantity and cost of labor, materials, and equipment expended, and to provide copies of this information to the other party on a daily basis for reconciliation. Any and all disagreement with the records maintained and provided by the other, must be documented in writing to all parties. However, these records are solely for the benefit of presentation to the arbitrator, whose decision may not necessarily be based on these records and in any event is final. Both parties should be aware that the City will not confirm or deny the accuracy of any records maintained by either party for Utility work performed pursuant to a Utility Agreement. While the arbitration is pending, the Company shall pay the Contractor on a monthly basis, based on the price offered by the Company to the Contractor for the performance of the work.

9. Arbitration of utility work:

The arbitration of the issues described above shall be conducted pursuant to the Construction Industry Arbitration Rules of the American Arbitration Association (hereinafter "the Rules" and "AAA") in effect on the date the arbitration is initiated except as set forth herein. The

arbitration award shall be final and binding upon the parties to the arbitration and judgment upon the award may be entered in a court having jurisdiction.

(a) Once an arbitrator(s) has been appointed by the AAA, the arbitration shall be scheduled as promptly as possible given the arbitrator(s) and the parties' schedules.

(b) No later than seven days prior to the first arbitration hearing, Company and Contractor shall submit to the arbitrator(s), and to each other, a summary of each party's respective position and such other information as is deemed appropriate, along with a copy of each party's Final Offer as specified in paragraph 8.

(c) The arbitration shall be conducted and concluded in two days.

(d) On the morning of the first day of the arbitration, Contractor and/or representatives shall have 3 ½ hrs to make a presentation of its claim to the arbitrator. During its presentation, Contractor shall not be permitted to produce any documents or cost records which have not already been provided to the Company. Contractor shall be permitted to produce any analysis or description of its claim which has been prepared for the purpose of its presentation.

(e) After lunch, Company and/or its representatives shall have two hours to ask Contractor questions about its claim and its presentation. Thereafter the arbitrator(s) shall have two hours to ask Contractor questions about its claim and its presentation.

(f) On the morning of the second day of the arbitration, Company and/or its representatives shall have 3 ½ hours to make a presentation of its claim to the arbitrator. During its presentation, the Company shall not be permitted to produce any documents or cost records which have not already been provided to the Contractor. The Company shall be permitted to produce any analysis or description of its claim which has been prepared for the purpose of its presentation.

(g) After lunch, Contractor and/or its representatives shall have two hours to ask Company questions about its claim and its presentation. Thereafter the arbitrator(s) shall have two hours to ask Company questions about its claim and its presentation.

(h) Subject to the above time limitations, the arbitrator(s) may conduct the arbitration in such manner as the arbitrator(s) deems reasonable.

(i) The arbitrator(s) shall then have one week to select in writing, as the arbitrator ('s) award, that party's Final Offer which appears to be more reasonable, based on the presentations at the arbitration hearings.

(j) The arbitrator shall have no discretion to grant an award other than one of the two Final Offers submitted by the parties.

(k) Any award for work that has already been performed shall be paid on the 7th day after receipt of the arbitrator's decision, or on the 30th day after completion of the work, whichever is later. Payment for work not yet completed at the time of the arbitrator's decision shall be paid within 30 days of completion of work. Interest shall accrue from the date payment is due at the rate of 9% per annum. Either party may cause judgment to be entered in accordance with the arbitrator(s) decision in a court in the State of New York, County of New York.

(l) The arbitrator's fees and any other costs of the arbitration shall be initially shared equally by Company and Contractor. The non-prevailing party shall then pay all arbitrator's fees and costs of the arbitration and shall reimburse the prevailing party for its share of such fees and costs theretofore paid.

(m) The parties may, at any time, settle any matter submitted to arbitration.

10. Order-out waiver:

The Contractor and all subcontractors hired by it, if an Interference Agreement is executed as specified between the concerned parties, agree to waive any rights they may have, if any, under law, contract or otherwise to compel the City to assert any right the City may have, including the issuance of any directives required under the New York City Administrative Code, Section 19-143 and Section 24-521, to require any or all of the Companies to maintain, repair, replace, protect, support, shift, alter, relocate, and/or remove utility facilities in connection with the work to be performed under this contract. However, nothing in this section shall preclude the City from exercising its rights under the Law to issue such a directive to the Company.

11. Cost of insurance:

Each of the named Companies, at their option and if an Interference Agreement is executed as specified between the concerned parties, may be named as an additional insured on all insurance policies required to be maintained under this contract. In the event that a Company opts to be so named as an additional insured, the actual incremental cost, if any, to the Contractor of providing such insurance coverage shall be borne by that Company. The Contractor shall provide a written statement from its insurance provider documenting the

actual cost of this added coverage to the Company. Under no circumstances shall the cost of insurance coverage on behalf of any Company be borne by the City. Nothing in this paragraph shall be interpreted to imply the City's acceptance of any additional responsibility or liability for any matter related to the performance of Utility Work. In particular, the Company and the Contractor bear joint and full responsibility to ensure that any Utility Work performed by the Contractor is in compliance with all applicable government and Company regulations.

12. Cost of utility interference work:

The Companies, by virtue of a prior agreement with the City, have agreed to perform their obligations described in this section. It is expressly understood that the cost of Utility Work or any delays cost cause by such utility work shall not be a charge against the City, but shall be a matter for adjustment between the Contractor and the Company or Companies concerned. The City and the Contractor agree that the Companies are third party beneficiaries of this section of the contract, if a Utility Agreement is executed between the contractor and utility company (ies). The provisions of this section shall govern in all cases where Company property interferes with or is about to be disturbed by the City work, notwithstanding any other provision of the Contract, except for Natural Gas transmission/distribution facilities covered subject to the Gas Facility Cost Allocation Act (GFCAA) and covered separately in this contract.

13. Default declaration:

The Contractor agrees that the provisions of this section are material provisions of the contract, and that the Contractor's failure to comply with the procedures set forth above are sufficient for the Commissioner to declare the Contractor in default pursuant to Article 48 of the Contract.

14. NYS Labor Law:

The Contractor is hereby advised that New York State Labor Law applies to public work. The work described in this Section U of the contract performed by utility company (ies) with their own forces or vendors hired by such company (ies) is not public work.

15. Facility operators:

The insurance requirements in Paragraph 11 of this Section U apply to: (i) additional Companies, if any, who were not named in Schedule "A" but which have executed a Utility Agreement with the contractor for utility work; and (ii) additional coverage, if any, paid for by Utility Companies whose utility facilities are located within the project limits, that they may require for the utility work pursuant to an utility agreement between the contractor and such utility companies.

[End]

"STANDARD UTILITY LETTER OF AGREEMENT"

(Name)
Deputy Commissioner, Infrastructure Division
Department of Design and Construction
30-30 Thomson Avenue
Long Island City, NY 11101

RE: City Work Performed in the Presence of Private Utility Facilities
Project No: _____

Dear (Name):

This letter is to certify that _____, has requested the inclusion of the attached "Section U: Additional contract requirements applying to work performed in the presence of privately owned utility." The company agrees to abide by the terms of this Section U at the company's own expenses due to their facilities interferences with the Public work.

Sincerely,

_____
By: Authorized Company Representative

_____
Title

NOTARY PUBLIC

CERTIFIED AS TO FORM
AND LEGAL AUTHORITY:

By:_____

SCHEDULE U-1

QED1007

TRUNK WATER MAIN IN ROCKAWAY BEACH BOULEVARD

SCHEDULE U-1 **LISTING OF COMPANIES NAMED FOR THIS CONTRACT**

COMPANY NAME	CONTACT NAME	CONTACT TELEPHONE
VERIZON	AUBREY MAKHANLALL	718-977-8165
TIME WARNER	JOHN PIAZZA	718-888-4261
PSEG	KEVIN RODGERS	516-949-8444

SECTION U-3

(NO TEXT IN THIS SECTION)

END OF ADDENDUM No. 4
This Addendum consists of Sixteen (16) pages

CITY OF NEW YORK
DEPARTMENT OF DESIGN AND CONSTRUCTION
DIVISION OF INFRASTRUCTURE

ADDENDA CONTROL SHEET

BID OPENING DATE: NOVEMBER 6, 2015

PROJECT NO.: QED1007

TITLE: FOR THE CONSTRUCTION OF TRUNK AND DISTRIBUTION WATER MAINS IN ROCKAWAY BEACH BOULEVARD, ETC

ADDENDA ISSUED	No. OF DRAWINGS	DATE
#1: Amendments to Standard Highway Specs.		04/15/2015
#2: Sewer and Water Main Specifications		06/23/2015
#3: Gas Cost Sharing (EP-7) Std. Specifications		06/23/2015
#4: To CET Specifications		06/23/2015
#5: Additional Amendments		10/15/2015

ATTACH TO CONTRACT DOCUMENTS

THE CITY OF NEW YORK
DEPARTMENT OF DESIGN AND CONSTRUCTION
INFRASTRUCTURE DIVISION
BUREAU OF DESIGN

PROJECT ID: QED1007

FOR THE CONSTRUCTION OF TRUNK AND DISTRIBUTION WATER MAINS IN ARVERNE BOULEVARD BETWEEN BEACH 59TH STREET AND BEACH 54TH STREET; ROCKAWAY BEACH BOULEVARD BETWEEN BEACH 54TH STREET AND BEACH 49TH STREET; BEACH 67TH STREET BETWEEN ROCKAWAY FREEWAY AND ROCKAWAY BEACH BOULEVARD; ROCKAWAY BEACH BOULEVARD BETWEEN BEACH 54TH STREET AND BEACH 53RD STREET; AND ROCKAWAY BEACH BOULEVARD BETWEEN BEACH 52ND STREET AND BEACH 49TH STREET

INCLUDING STORM AND SANITARY SEWER WORK

Together With All Work Incidental Thereto

BOROUGH OF QUEENS

ADDENDUM NO. 5

DATED: October 15, 2015

This Addendum is issued for the purpose of amending the requirements of the contract documents and is hereby made part of said contract documents to the same extent as if it was originally included therein.

(1) **Refer** to the Bid and Contract Documents, VOLUME 1 OF 3, Page A-1, Attachment 1 - Bid Information;
Change the dates shown for Submission of Bids To: and for Bid Opening: from "October 20, 2015 to read "November 6, 2015."

(2) **Refer** to the Bid and Contract Documents, VOLUME 1 OF 3, Page 13, Schedule B - MWBE;
Change the dates shown for Bid/Proposal Response Date: from "October 20, 2015 to read "November 6, 2015."

(3) **Refer** to the Bid and Contract Documents, VOLUME 1 OF 3, BID SCHEDULE, pages B-3 to B-28;
Delete all pages in their entirety;
Substitute attached revised pages B-3 (REVISION #1) to B-28 (REVISION #1).

Note: The revised attached bid sheets removes Item No. 60.27RSC36 - FURNISHING, DELIVERING AND INSTALLING 36-INCH DIAMETER BOLTED, SPLIT SLEEVE-TYPE RESTRAINED COUPLING.

(4) **Refer** to the Contract Drawings, Sheet No. 11 of 15, DETAILS OF 36" STEEL WATER MAIN ON CONCRETE SADDLE ON TIMBER PILES, NOTES;
Add the following note:

"5. The width of the pile caps is two feet six inches (2'6")."

By signing in the space provided below, the bidder acknowledges receipt of the two (2) pages of this Addendum plus twenty-six (26) pages of attachments.

THIS ADDENDUM MUST BE SIGNED BY ALL BIDDERS AND ATTACHED TO THEIR BIDS.

G. Saini

GURDIP SAINI, P.E.
Associate Commissioner/Design I

_____
Name of Bidder

By:_____

BID SCHEDULE

NOTE: (1) The Agency may reject a bid if it contains unbalanced bid prices. An unbalanced bid is considered to be one containing lump sum or unit items which do not reflect reasonable actual costs plus a reasonable proportionate share of the Bidder's anticipated profit, overhead costs, and other indirect costs, anticipated for the performance of the items in question.

(2) The following bid prices on Unit Price Contracts are to be paid for the actual quantities of the item numbers in the completed work or structure, and they cover the cost of all work, labor, material, tools, plant and appliances of every description necessary to complete the entire work, as specified, and the removal of all debris, temporary work and appliances.

(3) PLEASE BE SURE A LEGIBLE BID IS ENTERED, IN INK, FOR EACH ITEM.
Alterations must be initialed in ink by the bidder.

(4) The Extended Amount entered in Column 6 shall be the product of the Estimated Quantity in Column 3 times the Unit Price Bid in Column 5.

(5) Prospective bidders must examine the Bid Schedule carefully and, before bidding, must advise the Commissioner, in writing, if any pages are missing, and must request that such missing pages be furnished them. The pages of this Bid Schedule are numbered consecutively, as follows:
B - 3 [REVISION # 1] Through B - 28 [REVISION # 1]

PLEASE BE SURE A LEGIBLE BID IS ENTERED FOR EACH ITEM.
THE BIDDER SHALL INSERT THE TOTAL BID PRICE IN
THE BID FORM ON PAGE C-4 OF THIS BID BOOKLET.

NEW YORK CITY DEPARTMENT OF DESIGN AND CONSTRUCTION
DIVISION OF INFRASTRUCTURE - BUREAU OF DESIGN

PROJECT ID: QED1007
CONTRACT PIN: 8502014WM0013C

BID SCHEDULE FORM

COL. 1	COL. 2	COL. 3	COL. 4	COL. 5 UNIT PRICE (IN FIGURES)		COL. 6 EXTENDED AMOUNT (IN FIGURES)	
SEQ. NO	ITEM NUMBER and DESCRIPTION	ENGINEER'S ESTIMATE OF QUANTITIY	UNIT	DOLLARS	CTS	DOLLARS	CTS
001	**4.02 AF-R** ASPHALTIC CONCRETE WEARING COURSE, 2" THICK	9,800.00	S.Y.				
002	**4.02 AG** ASPHALTIC CONCRETE WEARING COURSE, 3" THICK	750.00	S.Y.				
003	**4.02 CA** BINDER MIXTURE	2,265.00	TONS				
004	**4.04 AC** CONCRETE BASE FOR PAVEMENT, 6" THICK, CLASS B-32	125.00	C.Y.				
005	**4.04 H** CONCRETE BASE FOR PAVEMENT, VARIABLE THICKNESS FOR TRENCH RESTORATION, (HIGH-EARLY STRENGTH)	30.00	C.Y.				
006	**4.08 AA** CONCRETE CURB (18" DEEP)	150.00	L.F.				

NEW YORK CITY DEPARTMENT OF DESIGN AND CONSTRUCTION
DIVISION OF INFRASTRUCTURE - BUREAU OF DESIGN

PROJECT ID: QED1007
CONTRACT PIN: 8502014WM0013C

BID SCHEDULE FORM

COL. 1 SEQ. NO	COL. 2 ITEM NUMBER and DESCRIPTION	COL. 3 ENGINEER'S ESTIMATE OF QUANTITIY	COL. 4 UNIT	COL. 5 UNIT PRICE (IN FIGURES) DOLLARS	CTS	COL. 6 EXTENDED AMOUNT (IN FIGURES) DOLLARS	CTS
007	4.09 AD STRAIGHT STEEL FACED CONCRETE CURB (18" DEEP)	360.00	L.F.				
008	4.09 CD CORNER STEEL FACED CONCRETE CURB (18" DEEP)	240.00	L.F.				
009	4.13 AAS 4" CONCRETE SIDEWALK (UNPIGMENTED)	1,680.00	S.F.				
010	4.13 BAS 7" CONCRETE SIDEWALK (UNPIGMENTED)	1,350.00	S.F.				
011	4.13 DE EMBEDDED PREFORMED DETECTABLE WARNING UNITS	192.00	S.F.				
012	4.18 A MAINTENANCE TREE PRUNING (UNDER 12" CAL.)	51.00	EACH				

NEW YORK CITY DEPARTMENT OF DESIGN AND CONSTRUCTION
DIVISION OF INFRASTRUCTURE - BUREAU OF DESIGN

PROJECT ID: QED1007
CONTRACT PIN: 8502014WM0013C

BID SCHEDULE FORM

COL. 1	COL. 2	COL. 3	COL. 4	COL. 5		COL. 6	
		ENGINEER'S ESTIMATE		UNIT PRICE (IN FIGURES)		EXTENDED AMOUNT (IN FIGURES)	
SEQ. NO	ITEM NUMBER and DESCRIPTION	OF QUANTITIY	UNIT	DOLLARS	CTS	DOLLARS	CTS
013	**4.18 B** MAINTENANCE TREE PRUNING (12" TO UNDER 18" CAL.)	14.00	EACH				
014	**4.18 C** MAINTENANCE TREE PRUNING (18" TO UNDER 24" CAL.)	5.00	EACH				
015	**4.21** TREE CONSULTANT	140.00	P/HR				
016	**50.21M3E024D** 24" R.C.P. CLASS III STORM SEWER, ENCASED IN CONCRETE	30.00	L.F.				
017	**50.31ME12** 12" E.S.V.P. STORM SEWER, ENCASED IN CONCRETE	30.00	L.F.				
018	**50.31SC10** 10" E.S.V.P. SANITARY SEWER, ON CONCRETE CRADLE	170.00	L.F.				

NEW YORK CITY DEPARTMENT OF DESIGN AND CONSTRUCTION
DIVISION OF INFRASTRUCTURE - BUREAU OF DESIGN

PROJECT ID: QED1007
CONTRACT PIN: 8502014WM0013C

BID SCHEDULE FORM

COL. 1 SEQ. NO	COL. 2 ITEM NUMBER and DESCRIPTION	COL. 3 ENGINEER'S ESTIMATE OF QUANTITIY	COL. 4 UNIT	COL. 5 UNIT PRICE (IN FIGURES) DOLLARS	CTS	COL. 6 EXTENDED AMOUNT (IN FIGURES) DOLLARS	CTS
019	**50.31SE12** 12" E.S.V.P. SANITARY SEWER, ENCASED IN CONCRETE	30.00	L.F.				
020	**50.41M6E12** 12" D.I.P. CLASS 56 STORM SEWER, ENCASED IN CONCRETE	30.00	L.F.				
021	**50.41M6E20** 20" D.I.P. CLASS 56 STORM SEWER, ENCASED IN CONCRETE	265.00	L.F.				
022	**51.11C000** CHAMBER	1.00	EACH				
023	**51.21S0A3000V** STANDARD SHALLOW MANHOLE TYPE A-3	3.00	EACH				
024	**51.21S0B1000V** STANDARD MANHOLE TYPE B-1	4.00	EACH				

NEW YORK CITY DEPARTMENT OF DESIGN AND CONSTRUCTION
DIVISION OF INFRASTRUCTURE - BUREAU OF DESIGN

PROJECT ID: QED1007
CONTRACT PIN: 8502014WM0013C

BID SCHEDULE FORM

COL. 1	COL. 2	COL. 3	COL. 4	COL. 5		COL. 6	
		ENGINEER'S ESTIMATE		UNIT PRICE (IN FIGURES)		EXTENDED AMOUNT (IN FIGURES)	
SEQ. NO	ITEM NUMBER and DESCRIPTION	OF QUANTITIY	UNIT	DOLLARS	CTS	DOLLARS	CTS
025	**51.21W000000V** SPECIAL SHALLOW MANHOLE	1.00	EACH				
026	**51.23RF** REPLACEMENT OF EXISTING MANHOLE FRAME AND COVER	13.00	EACH				
027	**51.41S001** STANDARD CATCH BASIN, TYPE 1	21.00	EACH				
028	**52.11D12** 12" DUCTILE IRON PIPE BASIN CONNECTION	540.00	L.F.				
029	**52.21V08** 8" E.S.V.P. RISER FOR HOUSE CONNECTION	10.00	V.F.				
030	**52.31V06S10** 6" E.S.V.P. SPUR FOR HOUSE CONNECTION ON 10" E.S.V.P. SANITARY SEWER	2.00	EACH				

NEW YORK CITY DEPARTMENT OF DESIGN AND CONSTRUCTION
DIVISION OF INFRASTRUCTURE - BUREAU OF DESIGN

PROJECT ID: QED1007
CONTRACT PIN: 8502014WM0013C

BID SCHEDULE FORM

COL. 1 SEQ. NO	COL. 2 ITEM NUMBER and DESCRIPTION	COL. 3 ENGINEER'S ESTIMATE OF QUANTITIY	COL. 4 UNIT	COL. 5 UNIT PRICE (IN FIGURES) DOLLARS	CTS	COL. 6 EXTENDED AMOUNT (IN FIGURES) DOLLARS	CTS
031	**52.31V06S12** 6" E.S.V.P. SPUR FOR HOUSE CONNECTION ON 12" E.S.V.P. SANITARY SEWER	4.00	EACH				
032	**52.41V06R** 6" E.S.V.P. HOUSE CONNECTION DRAIN ON CONCRETE CRADLE (RECONNECTION)	36.00	L.F.				
033	**53.11DR** TELEVISION INSPECTION AND DIGITAL AUDIO-VISUAL RECORDING OF SEWERS	985.00	L.F.				
034	**6.02 AAN** UNCLASSIFIED EXCAVATION	1,565.00	C.Y.				
035	**6.02 XHEC** INCREMENTAL COST FOR MODIFYING WORK METHODS NEAR (WITHIN 3 FEET OF) TRANSIT FACILITIES AND BUILDING VAULTS	25.00	C.Y.				
036	**6.02 XSCW** INCREMENTAL COST FOR USING SPECIAL CARE WORK METHODS NEAR (FROM 3 FEET TO 50 FEET) TRANSIT FACILITIES	25.00	C.Y.				

NEW YORK CITY DEPARTMENT OF DESIGN AND CONSTRUCTION
DIVISION OF INFRASTRUCTURE - BUREAU OF DESIGN

PROJECT ID: QED1007
CONTRACT PIN: 8502014WM0013C

BID SCHEDULE FORM

COL. 1	COL. 2	COL. 3	COL. 4	COL. 5		COL. 6	
		ENGINEER'S ESTIMATE		UNIT PRICE (IN FIGURES)		EXTENDED AMOUNT (IN FIGURES)	
SEQ. NO	ITEM NUMBER and DESCRIPTION	OF QUANTITIY	UNIT	DOLLARS	CTS	DOLLARS	CTS
037	6.25 RS TEMPORARY SIGNS	2,150.00	S.F.				
038	6.26 TIMBER CURB	8,610.00	L.F.				
039	6.28 AA LIGHTED TIMBER BARRICADES	2,250.00	L.F.				
040	6.40 C ENGINEER'S FIELD OFFICE (TYPE C)	18.00	MONTH				
041	6.44 THERMOPLASTIC REFLECTORIZED PAVEMENT MARKINGS (4" WIDE)	16,600.00	L.F.				
042	6.49 TEMPORARY PAVEMENT MARKINGS (4" WIDE)	4,200.00	L.F.				

NEW YORK CITY DEPARTMENT OF DESIGN AND CONSTRUCTION
DIVISION OF INFRASTRUCTURE - BUREAU OF DESIGN

PROJECT ID: QED1007
CONTRACT PIN: 8502014WM0013C

BID SCHEDULE FORM

COL. 1 SEQ. NO	COL. 2 ITEM NUMBER and DESCRIPTION	COL. 3 ENGINEER'S ESTIMATE OF QUANTITIY	COL. 4 UNIT	COL. 5 UNIT PRICE (IN FIGURES) DOLLARS	CTS	COL. 6 EXTENDED AMOUNT (IN FIGURES) DOLLARS	CTS
043	6.50 CLEANING OF DRAINAGE STRUCTURES	4.00	EACH				
044	6.52 CG CROSSING GUARD	875.00	P/HR				
045	6.53 REMOVE EXISTING LANE MARKINGS (4" WIDE)	4,200.00	L.F.				
046	6.87 PLASTIC BARRELS	2,180.00	EACH				
047	60.11R520 FURNISHING AND DELIVERING 20-INCH DUCTILE IRON RESTRAINED JOINT PIPE (CLASS 55)	40.00	L.F.				
048	60.11R536 FURNISHING AND DELIVERING 36-INCH DUCTILE IRON RESTRAINED JOINT PIPE (CLASS 55)	10.00	L.F.				

NEW YORK CITY DEPARTMENT OF DESIGN AND CONSTRUCTION
DIVISION OF INFRASTRUCTURE - BUREAU OF DESIGN

PROJECT ID: QED1007
CONTRACT PIN: 8502014WM0013C

BID SCHEDULE FORM

COL. 1	COL. 2	COL. 3	COL. 4	COL. 5 UNIT PRICE (IN FIGURES)		COL. 6 EXTENDED AMOUNT (IN FIGURES)	
SEQ. NO	ITEM NUMBER and DESCRIPTION	ENGINEER'S ESTIMATE OF QUANTITIY	UNIT	DOLLARS	CTS	DOLLARS	CTS
049	**60.11R606** FURNISHING AND DELIVERING 6-INCH DUCTILE IRON RESTRAINED JOINT PIPE (CLASS 56)	250.00	L.F.				
050	**60.11R608** FURNISHING AND DELIVERING 8-INCH DUCTILE IRON RESTRAINED JOINT PIPE (CLASS 56)	160.00	L.F.				
051	**60.11R612** FURNISHING AND DELIVERING 12-INCH DUCTILE IRON RESTRAINED JOINT PIPE (CLASS 56)	3,355.00	L.F.				
052	**60.12D06** LAYING 6-INCH DUCTILE IRON PIPE AND FITTINGS	295.00	L.F.				
053	**60.12D08** LAYING 8-INCH DUCTILE IRON PIPE AND FITTINGS	175.00	L.F.				
054	**60.12D12** LAYING 12-INCH DUCTILE IRON PIPE AND FITTINGS	3,580.00	L.F.				

NEW YORK CITY DEPARTMENT OF DESIGN AND CONSTRUCTION
DIVISION OF INFRASTRUCTURE - BUREAU OF DESIGN

PROJECT ID: QED1007
CONTRACT PIN: 8502014WM0013C

BID SCHEDULE FORM

COL. 1 SEQ. NO	COL. 2 ITEM NUMBER and DESCRIPTION	COL. 3 ENGINEER'S ESTIMATE OF QUANTITIY	COL. 4 UNIT	COL. 5 UNIT PRICE (IN FIGURES) DOLLARS	CTS	COL. 6 EXTENDED AMOUNT (IN FIGURES) DOLLARS	CTS
055	**60.12D20** LAYING 20-INCH DUCTILE IRON PIPE AND FITTINGS	50.00	L.F.				
056	**60.12D36** LAYING 36-INCH DUCTILE IRON PIPE AND FITTINGS	15.00	L.F.				
057	**60.13M0A24** FURNISHING AND DELIVERING DUCTILE IRON MECHANICAL JOINT 24 -INCH DIAMETER AND SMALLER FITTINGS, INCLUDING WEDGE TYPE RETAINER GLANDS	13.00	TONS				
058	**60.13M5S36** FURNISHING AND DELIVERING 36-INCH DUCTILE IRON MECHANICAL JOINT SLEEVES (CLASS 55)	1.00	EACH				
059	**60.18BJC20EL** FURNISHING, DELIVERING AND INSTALLING BELL JOINT CLAMPS, COMPLETE FOR 20-INCH PIPE AND LESS	14.00	EACH				
060	**60.21SP3T30** FURNISHING, DELIVERING AND LAYING 30-INCH STRAIGHT STEEL PIPE, 3/8-INCH WALL THICKNESS	35.00	L.F.				

NEW YORK CITY DEPARTMENT OF DESIGN AND CONSTRUCTION
DIVISION OF INFRASTRUCTURE - BUREAU OF DESIGN

PROJECT ID: QED1007
CONTRACT PIN: 8502014WM0013C

BID SCHEDULE FORM

COL. 1	COL. 2	COL. 3	COL. 4	COL. 5		COL. 6	
		ENGINEER'S ESTIMATE		UNIT PRICE (IN FIGURES)		EXTENDED AMOUNT (IN FIGURES)	
SEQ. NO	ITEM NUMBER and DESCRIPTION	OF QUANTITIY	UNIT	DOLLARS	CTS	DOLLARS	CTS
061	**60.21SP3T36** FURNISHING, DELIVERING AND LAYING 36-INCH STRAIGHT STEEL PIPE, 3/8-INCH WALL THICKNESS	2,875.00	L.F.				
062	**60.22BR3T30** FURNISHING, DELIVERING AND LAYING 30-INCH STEEL BENDS AND REDUCERS, 3/8-INCH WALL THICKNESS	20.00	L.F.				
063	**60.22BR3T36** FURNISHING, DELIVERING AND LAYING 36-INCH STEEL BENDS AND REDUCERS, 3/8-INCH WALL THICKNESS	125.00	L.F.				
064	**60.25PSO** FURNISHING, DELIVERING AND INSTALLING PLATE STEEL OUTLETS ON STEEL PIPE, ACCESS MANHOLE OUTLETS WITH COVERS, AND NUTS AND BOLTS COMPLETE	7,000.00	LBS.				
065	**60.29CP** FURNISHING, INSTALLING AND TESTING CORROSION CONTROL AND/OR CATHODIC PROTECTION SYSTEM	1.00	L.S.				

NEW YORK CITY DEPARTMENT OF DESIGN AND CONSTRUCTION
DIVISION OF INFRASTRUCTURE - BUREAU OF DESIGN

PROJECT ID: QED1007
CONTRACT PIN: 8502014WM0013C

BID SCHEDULE FORM

COL. 1 SEQ. NO	COL. 2 ITEM NUMBER and DESCRIPTION	COL. 3 ENGINEER'S ESTIMATE OF QUANTITIY	COL. 4 UNIT	COL. 5 UNIT PRICE (IN FIGURES) DOLLARS	CTS	COL. 6 EXTENDED AMOUNT (IN FIGURES) DOLLARS	CTS
066	**61.11DFM06** FURNISHING AND DELIVERING 6-INCH FLANGED-MECHANICAL JOINT DUCTILE IRON GATE VALVE COMPLETE WITH WEDGE TYPE RETAINER GLAND	4.00	EACH				
067	**61.11DFM12** FURNISHING AND DELIVERING 12-INCH FLANGED-MECHANICAL JOINT DUCTILE IRON GATE VALVE COMPLETE WITH WEDGE TYPE RETAINER GLAND	3.00	EACH				
068	**61.11DMM06** FURNISHING AND DELIVERING 6-INCH MECHANICAL JOINT DUCTILE IRON GATE VALVE COMPLETE WITH WEDGE TYPE RETAINER GLANDS	13.00	EACH				
069	**61.11DMM08** FURNISHING AND DELIVERING 8-INCH MECHANICAL JOINT DUCTILE IRON GATE VALVE COMPLETE WITH WEDGE TYPE RETAINER GLANDS	1.00	EACH				
070	**61.11DMM12** FURNISHING AND DELIVERING 12-INCH MECHANICAL JOINT DUCTILE IRON GATE VALVE COMPLETE WITH WEDGE TYPE RETAINER GLANDS	16.00	EACH				

NEW YORK CITY DEPARTMENT OF DESIGN AND CONSTRUCTION
DIVISION OF INFRASTRUCTURE - BUREAU OF DESIGN

PROJECT ID: QED1007
CONTRACT PIN: 8502014WM0013C

BID SCHEDULE FORM

COL. 1	COL. 2	COL. 3	COL. 4	COL. 5 UNIT PRICE (IN FIGURES)		COL. 6 EXTENDED AMOUNT (IN FIGURES)	
SEQ. NO	ITEM NUMBER and DESCRIPTION	ENGINEER'S ESTIMATE OF QUANTITIY	UNIT	DOLLARS	CTS	DOLLARS	CTS
071	**61.11DMM20** FURNISHING AND DELIVERING 20-INCH MECHANICAL JOINT DUCTILE IRON GATE VALVE COMPLETE WITH WEDGE TYPE RETAINER GLANDS	1.00	EACH				
072	**61.11TWC03** FURNISHING AND DELIVERING 3-INCH WET CONNECTION TAPPING VALVE COMPLETE WITH WEDGE TYPE RETAINER GLANDS	3.00	EACH				
073	**61.11TWC04** FURNISHING AND DELIVERING 4-INCH WET CONNECTION TAPPING VALVE COMPLETE WITH WEDGE TYPE RETAINER GLANDS	3.00	EACH				
074	**61.11TWC06** FURNISHING AND DELIVERING 6-INCH WET CONNECTION TAPPING VALVE COMPLETE WITH WEDGE TYPE RETAINER GLANDS	4.00	EACH				
075	**61.12DFM06** SETTING 6-INCH FLANGED-MECHANICAL JOINT DUCTILE IRON GATE VALVE COMPLETE WITH WEDGE TYPE RETAINER GLAND	4.00	EACH				
076	**61.12DFM12** SETTING 12-INCH FLANGED-MECHANICAL JOINT DUCTILE IRON GATE VALVE COMPLETE WITH WEDGE TYPE RETAINER GLAND	3.00	EACH				

NEW YORK CITY DEPARTMENT OF DESIGN AND CONSTRUCTION
DIVISION OF INFRASTRUCTURE - BUREAU OF DESIGN

PROJECT ID: QED1007
CONTRACT PIN: 8502014WM0013C

BID SCHEDULE FORM

COL. 1 SEQ. NO	COL. 2 ITEM NUMBER and DESCRIPTION	COL. 3 ENGINEER'S ESTIMATE OF QUANTITIY	COL. 4 UNIT	COL. 5 UNIT PRICE (IN FIGURES) DOLLARS	CTS	COL. 6 EXTENDED AMOUNT (IN FIGURES) DOLLARS	CTS
077	**61.12DMM06** SETTING 6-INCH MECHANICAL JOINT DUCTILE IRON GATE VALVE COMPLETE WITH WEDGE TYPE RETAINER GLANDS	13.00	EACH				
078	**61.12DMM08** SETTING 8-INCH MECHANICAL JOINT DUCTILE IRON GATE VALVE COMPLETE WITH WEDGE TYPE RETAINER GLANDS	1.00	EACH				
079	**61.12DMM12** SETTING 12-INCH MECHANICAL JOINT DUCTILE IRON GATE VALVE COMPLETE WITH WEDGE TYPE RETAINER GLANDS	16.00	EACH				
080	**61.12DMM20** SETTING 20-INCH MECHANICAL JOINT DUCTILE IRON GATE VALVE COMPLETE WITH WEDGE TYPE RETAINER GLANDS	1.00	EACH				
081	**61.12TWC03** SETTING 3-INCH WET CONNECTION TAPPING VALVE COMPLETE WITH WEDGE TYPE RETAINER GLANDS	3.00	EACH				
082	**61.12TWC04** SETTING 4-INCH WET CONNECTION TAPPING VALVE COMPLETE WITH WEDGE TYPE RETAINER GLANDS	3.00	EACH				

BID SCHEDULE FORM

COL. 1	COL. 2	COL. 3	COL. 4	COL. 5 UNIT PRICE (IN FIGURES)		COL. 6 EXTENDED AMOUNT (IN FIGURES)	
SEQ. NO	ITEM NUMBER and DESCRIPTION	ENGINEER'S ESTIMATE OF QUANTITIY	UNIT	DOLLARS	CTS	DOLLARS	CTS
083	**61.12TWC06** SETTING 6-INCH WET CONNECTION TAPPING VALVE COMPLETE WITH WEDGE TYPE RETAINER GLANDS	4.00	EACH				
084	**61.21BVB36** FURNISHING, DELIVERING AND INSTALLING 36-INCH BUTTERFLY VALVE WITH BY-PASS ARRANGEMENT AND OUTLET, COMPLETE	1.00	EACH				
085	**61.21EJB36** FURNISHING, DELIVERING AND INSTALLING 36-INCH EXPANSION JOINT FOR BUTTERFLY VALVE INCLUDING 6-INCH BY-PASS OUTLET	1.00	EACH				
086	**61.31PV12** FURNISHING, DELIVERING AND INSTALLING 12-INCH PRESSURE REGULATOR VALVE	1.00	EACH				
087	**62.11SD** FURNISHING AND DELIVERING HYDRANTS	16.00	EACH				
088	**62.12SG** SETTING HYDRANTS COMPLETE WITH WEDGE TYPE RETAINER GLANDS	16.00	EACH				

NEW YORK CITY DEPARTMENT OF DESIGN AND CONSTRUCTION
DIVISION OF INFRASTRUCTURE - BUREAU OF DESIGN

PROJECT ID: QED1007
CONTRACT PIN: 8502014WM0013C

BID SCHEDULE FORM

COL. 1 SEQ. NO	COL. 2 ITEM NUMBER and DESCRIPTION	COL. 3 ENGINEER'S ESTIMATE OF QUANTITIY	COL. 4 UNIT	COL. 5 UNIT PRICE (IN FIGURES) DOLLARS	CTS	COL. 6 EXTENDED AMOUNT (IN FIGURES) DOLLARS	CTS
089	62.13RH REMOVING HYDRANTS	10.00	EACH				
090	62.14FS FURNISHING, DELIVERING AND INSTALLING HYDRANT FENDERS	36.00	EACH				
091	63.11MH FURNISHING, DELIVERING AND INSTALLING 36-INCH CAST IRON MANHOLE HEADS AND COVERS	7.00	TONS				
092	63.11MS FURNISHING, DELIVERING AND INSTALLING MANHOLE STEPS TYPE PS2-PF	94.00	EACH				
093	63.11VC FURNISHING AND DELIVERING VARIOUS CASTINGS	17.00	TONS				
094	64.11EL WITHDRAWING AND REPLACING HOUSE SERVICES USING 1-1/2-INCH OR LARGER SCREW TAPS	2.00	EACH				

NEW YORK CITY DEPARTMENT OF DESIGN AND CONSTRUCTION
DIVISION OF INFRASTRUCTURE - BUREAU OF DESIGN

PROJECT ID: QED1007
CONTRACT PIN: 8502014WM0013C

BID SCHEDULE FORM

COL. 1	COL. 2	COL. 3	COL. 4	COL. 5		COL. 6	
		ENGINEER'S ESTIMATE		UNIT PRICE (IN FIGURES)		EXTENDED AMOUNT (IN FIGURES)	
SEQ. NO	ITEM NUMBER and DESCRIPTION	OF QUANTITIY	UNIT	DOLLARS	CTS	DOLLARS	CTS
095	**64.11ST** WITHDRAWING AND REPLACING HOUSE SERVICES USING SMALLER THAN 1-1/2-INCH SCREW TAPS	12.00	EACH				
096	**64.12COEG** CUTTING AND OFFSETTING HOUSE SERVICE WATER CONNECTIONS (EQUAL TO OR GREATER THAN 3-INCH DIAMETER)	10.00	L.F.				
097	**64.12COLT** CUTTING AND OFFSETTING HOUSE SERVICE WATER CONNECTIONS (LESS THAN 3-INCH DIAMETER)	10.00	L.F.				
098	**64.12ESEG** EXTENDING HOUSE SERVICE WATER CONNECTIONS (EQUAL TO OR GREATER THAN 3-INCH DIAMETER)	210.00	L.F.				
099	**64.12ESLT** EXTENDING HOUSE SERVICE WATER CONNECTIONS (LESS THAN 3-INCH DIAMETER)	30.00	L.F.				
100	**64.13WC08** FURNISHING, DELIVERING AND INSTALLING WET CONNECTION SLEEVE ON 8-INCH WATER MAIN PIPE WITH VARIOUS OUTLETS	1.00	EACH				

NEW YORK CITY DEPARTMENT OF DESIGN AND CONSTRUCTION
DIVISION OF INFRASTRUCTURE - BUREAU OF DESIGN

PROJECT ID: QED1007
CONTRACT PIN: 8502014WM0013C

BID SCHEDULE FORM

COL. 1 SEQ. NO	COL. 2 ITEM NUMBER and DESCRIPTION	COL. 3 ENGINEER'S ESTIMATE OF QUANTITIY	COL. 4 UNIT	COL. 5 UNIT PRICE (IN FIGURES) DOLLARS	CTS	COL. 6 EXTENDED AMOUNT (IN FIGURES) DOLLARS	CTS
101	**64.13WC12** FURNISHING, DELIVERING AND INSTALLING WET CONNECTION SLEEVE ON 12-INCH WATER MAIN PIPE WITH VARIOUS OUTLETS	9.00	EACH				
102	**65.11BR** FURNISHING, DELIVERING AND INSTALLING BANDS, RODS, WASHERS, ETC., COMPLETE, FOR RESTRAINING JOINTS	5,100.00	LBS.				
103	**65.21PS** FURNISHING AND PLACING POLYETHYLENE SLEEVE **Unit price bid shall not be less than: $ 0.50**	3,500.00	L.F.				
104	**65.31FF** FURNISHING, DELIVERING AND PLACING FILTER FABRIC **Unit price bid shall not be less than: $ 0.10**	68,800.00	S.F.				
105	**65.41PS06** FURNISHING, DELIVERING AND INSTALLING 6-INCH PIPE-TO-WALL PENETRATION SEAL, INCLUDING STEEL SLEEVE AND ANCHOR/WATER STOP PLATE	2.00	EACH				

NEW YORK CITY DEPARTMENT OF DESIGN AND CONSTRUCTION
DIVISION OF INFRASTRUCTURE - BUREAU OF DESIGN

PROJECT ID: QED1007
CONTRACT PIN: 8502014WM0013C

BID SCHEDULE FORM

COL. 1	COL. 2	COL. 3	COL. 4	COL. 5		COL. 6	
		ENGINEER'S ESTIMATE		UNIT PRICE (IN FIGURES)		EXTENDED AMOUNT (IN FIGURES)	
SEQ. NO	ITEM NUMBER and DESCRIPTION	OF QUANTITIY	UNIT	DOLLARS	CTS	DOLLARS	CTS
106	**65.41PS12** FURNISHING, DELIVERING AND INSTALLING 12-INCH PIPE-TO-WALL PENETRATION SEAL, INCLUDING STEEL SLEEVE AND ANCHOR/WATER STOP PLATE	4.00	EACH				
107	**65.41PS36** FURNISHING, DELIVERING AND INSTALLING 36-INCH PIPE-TO-WALL PENETRATION SEAL, INCLUDING STEEL SLEEVE AND ANCHOR/WATER STOP PLATE	4.00	EACH				
108	**65.51PC** FURNISHING AND PLACING CAST-IN-PLACE CONCRETE CLASS 40 AND PRECAST CONCRETE CLASS 50	125.00	C.Y.				
109	**65.61SS** FURNISHING, DELIVERING AND PLACING STRUCTURAL, REINFORCING AND MISCELLANEOUS STEEL	14,450.00	LBS.				
110	**65.71SG** FURNISHING, DELIVERING AND PLACING SCREENED GRAVEL OR SCREENED BROKEN STONE BEDDING	875.00	C.Y.				

NEW YORK CITY DEPARTMENT OF DESIGN AND CONSTRUCTION
DIVISION OF INFRASTRUCTURE - BUREAU OF DESIGN

PROJECT ID: QED1007
CONTRACT PIN: 8502014WM0013C

BID SCHEDULE FORM

COL. 1 SEQ. NO	COL. 2 ITEM NUMBER and DESCRIPTION	COL. 3 ENGINEER'S ESTIMATE OF QUANTITIY	COL. 4 UNIT	COL. 5 UNIT PRICE (IN FIGURES) DOLLARS	CTS	COL. 6 EXTENDED AMOUNT (IN FIGURES) DOLLARS	CTS
111	7.13 B MAINTENANCE OF SITE **Unit price bid shall not be less than: $ 8,000.00**	12.00	MONTH				
112	7.36 PEDESTRIAN STEEL BARRICADES	7,650.00	L.F.				
113	7.88 AA RODENT INFESTATION SURVEY AND MONITORING **Unit price bid shall not be less than: $ 3,500.00**	1.00	L.S.				
114	7.88 AB RODENT BAIT STATIONS **Unit price bid shall not be less than: $ 60.00**	115.00	EACH				
115	7.88 AC BAITING OF RODENT BAIT STATIONS **Unit price bid shall not be less than: $ 9.25**	115.00	EACH				
116	7.88 AD WATERBUG BAIT APPLICATIONS **Unit price bid shall not be less than: $ 65.00**	250.00	BLOCK				

NEW YORK CITY DEPARTMENT OF DESIGN AND CONSTRUCTION
DIVISION OF INFRASTRUCTURE - BUREAU OF DESIGN

PROJECT ID: QED1007
CONTRACT PIN: 8502014WM0013C

BID SCHEDULE FORM

COL. 1 SEQ. NO	COL. 2 ITEM NUMBER and DESCRIPTION	COL. 3 ENGINEER'S ESTIMATE OF QUANTITIY	COL. 4 UNIT	COL. 5 UNIT PRICE (IN FIGURES) DOLLARS	CTS	COL. 6 EXTENDED AMOUNT (IN FIGURES) DOLLARS	CTS
117	70.11TT TIMBER PILES (TREATED) **Unit price bid shall not be less than: $ 17.50**	20,040.00	V.F.				
118	70.21DK DECKING	775.00	S.Y.				
119	70.31FN FENCING **Unit price bid shall not be less than: $ 2.00**	16,400.00	L.F.				
120	70.51EO EXCAVATION OF BOULDERS IN OPEN CUT **Unit price bid shall not be less than: $ 75.00**	40.00	C.Y.				
121	70.71SB STONE BALLAST **Unit price bid shall not be less than: $ 15.00**	285.00	C.Y.				
122	70.81CB CLEAN BACKFILL **Unit price bid shall not be less than: $ 15.00**	2,075.00	C.Y.				

NEW YORK CITY DEPARTMENT OF DESIGN AND CONSTRUCTION
DIVISION OF INFRASTRUCTURE - BUREAU OF DESIGN

PROJECT ID: QED1007
CONTRACT PIN: 8502014WM0013C

BID SCHEDULE FORM

COL. 1	COL. 2	COL. 3	COL. 4	COL. 5 UNIT PRICE (IN FIGURES)		COL. 6 EXTENDED AMOUNT (IN FIGURES)	
SEQ. NO	ITEM NUMBER and DESCRIPTION	ENGINEER'S ESTIMATE OF QUANTITIY	UNIT	DOLLARS	CTS	DOLLARS	CTS
123	**70.91SW12** FURNISHING AND PLACING SHEETING AND BRACING IN TRENCH FOR WATER MAIN PIPE 12-INCH IN DIAMETER AND LESS	3,100.00	S.F.				
124	**70.91SW20** FURNISHING AND PLACING SHEETING AND BRACING IN TRENCH FOR WATER MAIN PIPE 20-INCH IN DIAMETER	290.00	S.F.				
125	**73.11AB** ADDITIONAL BRICK MASONRY **Unit price bid shall not be less than: $ 62.50**	35.00	C.Y.				
126	**73.21AC** ADDITIONAL CONCRETE **Unit price bid shall not be less than: $ 62.50**	185.00	C.Y.				
127	**73.31AE0** ADDITIONAL EARTH EXCAVATION INCLUDING TEST PITS (ALL DEPTHS) **Unit price bid shall not be less than: $ 20.00**	60.00	C.Y.				
128	**73.41AG** ADDITIONAL SELECT GRANULAR BACKFILL **Unit price bid shall not be less than: $ 15.00**	55.00	C.Y.				

NEW YORK CITY DEPARTMENT OF DESIGN AND CONSTRUCTION
DIVISION OF INFRASTRUCTURE - BUREAU OF DESIGN

PROJECT ID: QED1007
CONTRACT PIN: 8502014WM0013C

BID SCHEDULE FORM

COL. 1 SEQ. NO	COL. 2 ITEM NUMBER and DESCRIPTION	COL. 3 ENGINEER'S ESTIMATE OF QUANTITIY	COL. 4 UNIT	COL. 5 UNIT PRICE (IN FIGURES) DOLLARS	CTS	COL. 6 EXTENDED AMOUNT (IN FIGURES) DOLLARS	CTS
129	73.51AS ADDITIONAL STEEL REINFORCING BARS **Unit price bid shall not be less than: $ 1.00**	8,970.00	LBS.				
130	76.11CR CONSTRUCTION REPORT	1.00	L.S.				
131	76.21MR MONITORING AND POST-CONSTRUCTION REPORT	1.00	L.S.				
132	UTL-6.01.1 GAS MAIN CROSSING SEWER UP TO 24" IN DIAMETER (S6.01) **Unit price bid shall not be less than: $ 1,040.00**	9.00	EACH				
133	UTL-6.01.11 GAS MAIN CROSSING WATER MAIN 36" THRU 42" IN DIAMETER (S6.01) **Unit price bid shall not be less than: $ 685.00**	6.00	EACH				
134	UTL-6.01.9 GAS MAIN CROSSING WATER MAIN UP TO 20" IN DIAMETER (S6.01) **Unit price bid shall not be less than: $ 485.00**	5.00	EACH				

NEW YORK CITY DEPARTMENT OF DESIGN AND CONSTRUCTION
DIVISION OF INFRASTRUCTURE - BUREAU OF DESIGN

PROJECT ID: QED1007
CONTRACT PIN: 8502014WM0013C

BID SCHEDULE FORM

COL. 1 SEQ. NO	COL. 2 ITEM NUMBER and DESCRIPTION	COL. 3 ENGINEER'S ESTIMATE OF QUANTITIY	COL. 4 UNIT	COL. 5 UNIT PRICE (IN FIGURES) DOLLARS	CTS	COL. 6 EXTENDED AMOUNT (IN FIGURES) DOLLARS	CTS
135	UTL-6.02 EXTRA EXCAVATION FOR THE INSTALLATION OF CATCH BASIN SEWER DRAIN PIPES WITH GAS INTERFERENCES (S6.02) **Unit price bid shall not be less than: $ 715.00**	2.00	EACH				
136	UTL-6.03 REMOVAL OF ABANDONED GAS FACILITIES. ALL SIZES. (S6.03) **Unit price bid shall not be less than: $ 15.00**	4,000.00	L.F.				
137	UTL-6.03.1 REMOVAL OF ABANDONED GAS FACILITIES WITH POSSIBLE COAL TAR WRAP. ALL SIZES. (S6.03) **Unit price bid shall not be less than: $ 25.00**	1,000.00	L.F.				
138	UTL-6.04 ADJUST HARDWARE TO GRADE USING SPACER RINGS/ADAPTORS. (STREET REPAVING.) (S6.04) **Unit price bid shall not be less than: $ 35.00**	5.00	EACH				
139	UTL-6.05 ADJUST HARDWARE TO GRADE BY RESETTING. (ROAD RECONSTRUCTION.) (S6.05) **Unit price bid shall not be less than: $ 65.00**	10.00	EACH				
140	UTL-6.06 SPECIAL CARE EXCAVATION AND BACKFILLING (S6.06) **Unit price bid shall not be less than: $ 180.00**	500.00	C.Y.				

NEW YORK CITY DEPARTMENT OF DESIGN AND CONSTRUCTION
DIVISION OF INFRASTRUCTURE - BUREAU OF DESIGN

PROJECT ID: QED1007
CONTRACT PIN: 8502014WM0013C

BID SCHEDULE FORM

COL. 1 SEQ. NO	COL. 2 ITEM NUMBER and DESCRIPTION	COL. 3 ENGINEER'S ESTIMATE OF QUANTITIY	COL. 4 UNIT	COL. 5 UNIT PRICE (IN FIGURES) DOLLARS	CTS	COL. 6 EXTENDED AMOUNT (IN FIGURES) DOLLARS	CTS
141	UTL-6.07 TEST PITS FOR GAS FACILITIES (S6.07) **Unit price bid shall not be less than: $ 100.00**	30.00	C.Y.				
142	UTL-GCS-2WS GAS INTERFERENCES AND ACCOMMODATIONS **PRICE BID SHALL BE FOR THE FIXED SUM OF $ 60,000.00**	1.00	F.S.	60,000	00	60,000	00

SUB-TOTAL: $ _____

143	6.39 A MOBILIZATION **BID PRICE OF MOBILIZATION SHALL NOT EXCEED 4% OF THE ABOVE SUB-TOTAL PRICE.**	1.00	L.S.				

TOTAL BID PRICE: $ _____

PLEASE BE SURE A LEGIBLE BID IS ENTERED FOR EACH ITEM.
THE BIDDER SHALL INSERT THE TOTAL BID PRICE IN
THE BID FORM ON PAGE C-4 OF THIS BID BOOKLET.

Department of Design and Construction

INFRASTRUCTURE DIVISION
BUREAU OF DESIGN

VOLUME 3 OF 3

PROJECT ID: QED1007

FOR THE CONSTRUCTION OF TRUNK AND DISTRIBUTION WATER MAINS IN ARVERNE BOULEVARD BETWEEN BEACH 59TH STREET AND BEACH 54TH STREET; ROCKAWAY BEACH BOULEVARD BETWEEN BEACH 54TH STREET AND BEACH 49TH STREET; BEACH 67TH STREET BETWEEN ROCKAWAY FREEWAY AND ROCKAWAY BEACH BOULEVARD; ROCKAWAY BEACH BOULEVARD BETWEEN BEACH 54TH STREET AND BEACH 53RD STREET; AND ROCKAWAY BEACH BOULEVARD BETWEEN BEACH 52ND STREET AND BEACH 49TH STREET

INCLUDING STORM AND SANITARY SEWER WORK

Together With All Work Incidental Thereto
BOROUGH OF QUEENS
CITY OF NEW YORK

_____
Contractor

_____

Dated_____, **20**___

_____