Department of Design and Construction

THE CITY OF NEW YORK
DEPARTMENT OF DESIGN AND CONSTRUCTION
DIVISION OF INFRASTRUCTURE

30-30 THOMSON AVENUE
LONG ISLAND CITY, NEW YORK 11101-3045
TELEPHONE (718) 391-1000
WEBSITE www.nyc.gov/buildnyc

LAW

VOLUME 1 OF 3

BID BOOKLET

FOR FURNISHING ALL LABOR AND MATERIALS NECESSARY AND REQUIRED FOR:

PROJECT ID: HWXP136B

RECONSTRUCTION OF GRAND CONCOURSE SERVICE ROADS, RESURFACING OF THE MAIN ROADWAY AND WIDENING OF MEDIANS FROM EAST 171ST STREET TO EAST 175TH STREET

INCLUDING SEWER, WATER MAIN, STREET LIGHTING, AND TRAFFIC SIGNAL WORK

Together With All Work Incidental Thereto

BOROUGH OF THE BRONX
CITY OF NEW YORK

FOR THE DEPARTMENT OF TRANSPORTATION
PREPARED BY IN-HOUSE

JULY 25, 2016

NYSDOT PIN X761.16
Fed. Aid Project No. _____

Bid Opening 11:00 A.M. on _____
Location 1st Floor Bid Room, 30-30 Thomson Ave., Long Island City, N.Y. 11101

17-009

Bid Tab

Description	**RECONSTRUCTION OF THE GRAND CONCOURSE SERVICE ROADS, ETC. - BOROUGH OF THE BRONX**		
Bid Date	**9/30/2016**	**FMS ID**	**HWXP136B**
Estimated Cost	**$20,989,442.00**	**Client Agency**	**DOT**
Bid Security	**Not less than 2% of Total Bid Price**	**PLA**	**NO**
Time Allowed	**730CCD**	**Federal Funded**	**FHWA**
Addendum	**1**	**Contract Manager**	**Shermaine Manifold**
PIN	**8502016HW0061C**	**E-PIN**	**85017B0005**
Selective Bidding	**☐Yes ☒No**	**Project Manager**	**Pegah Chomeili**

Bid Rank	Vendor	Bid Amount	Security Type
1	NY ASPHALT INC	$19,605,130.25	Bond
2	DEBOE CONSTRUCTION CORP.	$19,835,560.36	Bond
3	RESTANI CONSTRUCTION CORP.	$19,895,280.65	Bond
4	PCI INDUSTRIES CORP	$20,405,217.65	Bond
5	GRACE INDUSTRIES LLC	$20,624,649.65	Bond
6	P & T II CONTRACTING CORP.	$20,648,729.04	Bond
7	EASTERN EXCAVATION INC.	$20,998,279.38	Bond
8	PERFETTO CONTRACTING CO. INC.	$21,150,000.00	Bond
9	JR CRUZ CORP	$24,862,268.00	Bond

Bid Rank	Vendor	Bid Amount	Security Type
10	C.A.C. INDUSTRIES, INC.	$25,517,318.67	Bond
11	TRIUMPH CONSTRUCTION CORP.	$25,981,493.88	Bond
12	BEAVER CONCRETE CONSTRUCTION CO., INC.	$27,057,529.15	Bond
13	GATEWAY INDUSTRIES, INC.	$30,125,357.24	Bond

Recorder: Brenda Barreiro Ext. 1041 Approver: Lorraine Holley

Department of Design and Construction

Dr. Feniosky Peña-Mora
Commissioner

Charlette Hamamgian, Esq.
Agency Chief
Contracting Officer

Lorraine Holley
Deputy ACCO
Competitive Sealed
Bid Contracts

April 13, 2017

CERTIFIED MAIL - RETURN RECEIPT REQUEST
NY ASPHALT INC
366 INDUSTRIAL LOOP
STATEN ISLAND, NY 10309

RE: FMS ID: HWXP136B
E-PIN: 85017B0005001
DDC PIN: 8502016HW0061C
RECONSTRUCTION OF THE GRAND CONCOURSE SERVICE ROADS, ETC. - BOROUGH OF THE BRONX
NOTICE OF AWARD

Dear Contractor:

You are hereby awarded the above referenced contract based upon your bid in the amount of $19,605,130.25 submitted at the bid opening on September 30, 2016. Within ten (10) days of your receipt of this notice of award, you are required to take the actions set forth in Paragraphs (1) through (3) below. For your convenience, attached please find a copy of Schedule A of the General Conditions to the Contract, which sets forth the types and amounts of insurance coverage required for this contract.

(1) Execute two copies of the Agreement in the Contracts Unit, 30-30 Thomson Avenue, 1st Floor, Long Island City, New York (IDCNY Building). A Commissioner of Deeds will be available to witness and notarize your signature. The Agreement must be signed by an officer of the corporation or a partner of the firm.

(2) Submit to the Contracts Unit two properly executed performance and payment bonds. If required for this contract, copies of performance and payment bonds are attached.

(3) Submit to the Contracts Unit the following insurance documentation: (a) original certificate of insurance for general liability in the amount required by Schedule A, and (b) original certificates of insurance or other proof of coverage for workers' compensation and disability benefits, as required by New York State Law. The insurance documentation specified in this paragraph is required for registration of the contract with the Comptroller's Office.

NYC DDC **Department of Design and Construction**

On or before the contract commencement date, you are required to submit all other certificates of insurance and/or policies in the types and amounts required by Schedule A. Such certificates of Insurance and/or policies must be submitted to the Agency Chief Contracting Office, Attention: Risk Manager, Fourth Floor at the above indicated department address.

Your attention is directed to the section of the Information for Bidders entitled "Failure to Execute Contract". As indicated in this section, in the event you fail to execute the contract and furnish the required bonds within the (10) days of your receipt of this notice of award, your bid security will be retained by the City and you will be liable for the difference between your bid price and the price for which the contract is subsequently awarded, less the amount of the bid security retained.

Sincerely,

Michael Shipman
Director of Contracts

30 - 30 Thomson Ave L.I.C., NY 11101 Telephone: (718) 391-2838 Facsimile: (718) 391-1885 www.nyc.gov/buildnyc

Notices to Bidders

Pre-Bid Questions (PBQs)

Please be advised that PBQs should be submitted to the Agency Contact Person at least five (5) business days (by 5:00 PM EST) prior to the bid opening date as indicated in ATTACHMENT 1 - BID INFORMATION, page A-1 and SCHEDULE B, page 13, VOLUME 1 OF 3 of this BID BOOKLET.

Apprenticeship Program

If Apprenticeship Program is required as noted on Page 19 of this BID BOOKLET, the following notice applies:

Please be advised that, pursuant to the authority granted to the City under Labor Law §816-b, the New York City Department of Design and Construction hereby requires that the contractor awarded a contract as a result of this solicitation, and any of its subcontractors with subcontracts worth two million dollars or over, have, prior to entering into such contract or subcontract, apprenticeship agreements appropriate for the type and scope of work to be performed that have been registered with, and approved by, the New York State Commissioner of Labor. In addition, the contractor and its subcontractors will be required to show that such apprenticeship program/s have successfully passed the two year Probation period following the initial registration date of such program/s with the New York State Department of Labor.

The failure to prove, upon request, that these requirements have been met shall result in the contract not being awarded to the contractor or the subcontractor not being approved.

Please be further advised that, pursuant to Labor Law §220, the allowable ratio of apprentices to journeypersons in any craft classification shall not be greater than the ratio permitted to the contractor as to its workforce on any job under the registered apprenticeship program.

Notices to Bidders

Compliance with HireNYC and Reporting Requirements

The Hiring and Employment Rider shall apply to contracts valued at $1 million or more for all goods, services and construction except human services contracts that are subject to the Public Assistance Hiring Commitment Rider. The Rider describes the Hire NYC process and obligations, including reporting requirements throughout the life of the contract. The Hire NYC process requires contractors to enroll with the Hire NYC system within thirty days after the registration of the contract subject to this solicitation, to provide information regarding all entry to mid-level job opportunities arising from this contract and located in New York City, and to agree to interview qualified candidates from HireNYC for those opportunities. The Rider also includes reporting requirements unrelated to HireNYC.

NYC Construction Loan Pilot Program

The New York City Department of Small Business Services (SBS), in conjunction with the New York Business Development Corporation (NYBDC), have established **a NYC Construction Loan** pilot program to provide prime contractors and subcontractors financing for mobilization costs on certain City construction projects.

Under this initiative, loans are available for early stage mobilization needs such as insurance, labor, supplies and equipment. Bidders are strongly encouraged to visit "Growing Your Business" at www.nyc.gov/nycbusiness to learn more about the loan or contact constructionloan@sbs.nyc.gov / (212) 513-6444 to obtain details and to determine preliminary eligibility.

A successful loan applicant will be required to make an assignment of its contract (or subcontract) payments to the lender NYBDC until the loan is repaid. If the loan is to a subcontractor, a prime contractor must honor the terms of such an assignment.

A prime contractor may not discriminate against a subcontractor or potential subcontractor by reason of the subcontractor's participation, or nonparticipation, in the NYC Construction loan program.

CITY OF NEW YORK

DEPARTMENT OF DESIGN AND CONSTRUCTION DIVISION OF INFRASTRUCTURE

BID BOOKLET

FOR FURNISHING ALL LABOR AND MATERIALS
NECESSARY AND REQUIRED FOR:

PROJECT ID: HWXP136B

RECONSTRUCTION OF GRAND CONCOURSE SERVICE ROADS, RESURFACING OF THE MAIN ROADWAY AND WIDENING OF MEDIANS FROM EAST 171ST STREET TO EAST 175TH STREET

INCLUDING SEWER, WATER MAIN, STREET LIGHTING, AND TRAFFIC SIGNAL WORK

Together With All Work Incidental Thereto

BOROUGH OF THE BRONX
CITY OF NEW YORK

(NO TEXT ON THIS PAGE)

PROJECT ID: HWXP136B

CITY OF NEW YORK
DEPARTMENT OF DESIGN AND CONSTRUCTION
DIVISION OF INFRASTRUCTURE

BID BOOKLET

TABLE OF CONTENTS

SECTION		PAGE
PART A		
1.	Table of Contents	1
2.	Special Notice to Bidders	2
3.	Attachment 1 – Bid Information	A-1
4.	Bid Schedule	B-1
5.	Bid Form	C-1
6.	Affirmation	C-6
7.	Bid Bond	C-7
8.	M/WBE Program: M/WBE Utilization Plan	5
9.	Apprenticeship Program Requirements	19
PART B		
10.	Safety Questionnaire	22
11.	Pre-award Process	25
12.	Project Reference Form	27
13.	Contract Certificate	30
14.	Vendex Compliance	31
15.	Iran Divestment Act Compliance Rider	32
16.	Construction Employment Report	34

(NO TEXT ON THIS PAGE)

CITY OF NEW YORK
DEPARTMENT OF DESIGN AND CONSTRUCTION
DIVISION OF INFRASTRUCTURE

SPECIAL NOTICE TO BIDDERS – FEDERALLY FUNDED CONTRACTS (Revised 04-2016)

BID SUBMISSION REQUIREMENTS

THE FOLLOWING DOCUMENTS ARE TO BE COMPLETED AND SUBMITTED WITH THE BID:

1. Bid Schedule and Bid Form, including Affirmation
2. Bid Security (if required, see Attachment 1 on Page A-1)
3. Debarment History Certification (See Page TF-J6 in the TF-Pages)
4. Non-Collusive Bidding Certification (See Page TF-J3 in the TF-Pages)
5. DBE Utilization Schedule (See Page TF-D6 in the TF-Pages)

FAILURE TO SUBMIT ITEMS (1) THROUGH (5)
WILL RESULT IN THE DISQUALIFICATION OF THE BID.

6. Safety Questionnaire
7. Construction Employment Report (if bid is $1,000,000 or more)
8. Contract Certificate (if bid is less than $1,000,000)
9. Confirmation of Vendex Compliance
10. Bidder's Certification of Compliance with Iran Divestment Act
11. Special Experience Requirements (if applicable)
12. Apprenticeship Program Questionnaire (if applicable)
13. Disclosure of Lobbying Activities (if applicable) (See Page TF-J9 in the TF-Pages)
14. Any addenda issued prior to the receipt of bids

FAILURE TO SUBMIT ITEMS (5) THROUGH (14)
MAY RESULT IN THE DISQUALIFICATION OF THE BID.

NOTES:

(1) All of the above referred to blank forms to be completed and submitted with the bid are included in the BID BOOKLET, except forms for items (3), (4), (5), and (13) which are in the TF-Pages as noted above.

(2) If the bidder has any questions or requires additional information, please contact the Department of Design and Construction by phone (718-391- 2601) or by fax (718-391-2615).

(3) VENDEX QUESTIONNAIRES: The Bidder is advised that Vendex Questionnaires and procedures have been changed. Vendex Questionnaires, as well as detailed instructions, may be obtained at www.nyc.gov/vendex. The bidder may also obtain Vendex forms and instructions by contacting the Agency Chief Contracting Officer or the contact person for this contract.

(4) SPECIAL EXPERIENCE REQUIREMENTS: The Bidder is advised that Special Experience Requirements may apply to this contract. Such requirements are set forth on pages 3, 3a, 3b, and 4 of this Bid Booklet.

SPECIAL NOTICE TO BIDDERS

SPECIAL EXPERIENCE REQUIREMENTS (Revised 03/2014)

(A) **SPECIAL EXPERIENCE REQUIREMENTS FOR THE BIDDER:** The Special Experience Requirements set forth below apply to the bidder. Compliance with such Special Experience Requirements will be determined solely by the City prior to an award of contract. Failure to comply with the Special Experience Requirements will result in rejection of the bid as non-responsive.

The requirements in this Section (A) apply to this contract where indicated by a blackened box (■).

■ The bidder must, within the last seven (7) consecutive years prior to the bid opening, have successfully completed in a timely fashion at least one (1) project similar in scope and type to the required work. Such prior project may have been performed as a prime contractor, subcontractor or sub-subcontractor.

The Special Experience Requirements next to the blackened box below apply to the bidder. If the bidder intends to perform such work itself, it must demonstrate compliance with the Special Experience Requirements. If the bidder intends to subcontract this work, the proposed subcontractor or sub-subcontractor must demonstrate compliance with the Special Experience Requirements. The contractor, subcontractor or sub-subcontractor (hereinafter referred to as the "entity") that will perform any specific area of work indicated by the blackened box below, may have performed the required prior project(s) as a prime contractor, subcontractor or sub-subcontractor. Once approved, no substitution will be permitted, unless the qualifications of the proposed replacement have been approved in writing in advance by the City.

☐ **Trunk Water Main Work:** The entity that will perform the trunk water main work must, within the last seven (7) consecutive years prior to the bid opening, have successfully completed in a timely fashion at least one (1) project similar in scope and type to the required work.

☐ **Best Management Practice Work:** Best Management Practice ("BMP") Work is any item of work in the Bid Schedule that begins with the prefix "BMP". The entity that will perform any BMP Work must, within the last five (5) consecutive years prior to the bid opening, have successfully completed in a timely fashion at least three (3) projects similar in scope and type to the required work.

For professional services in connection with BMP Work, (i.e., monitoring and reporting services), the individual who will perform the required services must, within the last five (5) consecutive years prior to the bid opening, have successfully completed in a timely fashion at least three (3) projects similar in scope and type to the required work. Additional requirements are set forth below.

☐ The individual serving as the Restoration Specialist (Construction Monitor) must be a Registered Landscape Architect licensed by the state of New York, or must have equivalent professional experience.

☐ The individual serving as the Erosion and Sediment Control Licensed/Certified Professional must be a Certified Professional in Erosion and Sediment Control (CPESC), certified by CPESC, Inc.

☐ **Micro-Tunneling/Pipe Jacking Work:** The entity that will perform the micro-tunneling/pipe jacking work must, within the last five (5) consecutive years prior to the bid opening, have successfully completed in a timely fashion at least two (2) projects similar in scope and type to the required work.

☐ **OTHER:** _____

_____

(B) **SPECIAL EXPERIENCE REQUIREMENTS FOR SPECIFIC AREAS OF WORK (to be provided after an award of contract):**

The requirements in this Section (B) apply to this contract where indicated by a blackened box (■).

The Special Experience Requirements set forth below apply to the contractor, subcontractor or sub-subcontractor that will perform the specific area of work. **Compliance with such Special Experience Requirements will be determined solely by the City after an award of contract.** After an award of contract, when requested by the City, the contractor will be required to submit the qualifications of the contractor, subcontractor or sub-subcontractor that will perform the specific area of work. If the bidder intends to perform such work itself, it must demonstrate compliance with the Special Experience Requirements. If the bidder intends to subcontract this work, the proposed subcontractor or sub-subcontractor must demonstrate compliance with the Special Experience Requirements. Once approved, no substitution will be permitted, unless the qualifications of the proposed replacement have been approved in writing in advance by the City.

Special Experience Requirements apply to the contractor, subcontractor or sub-subcontractor (hereinafter referred to as the "entity") that will perform any specific area of work indicated by a blackened box. The entity may have performed the required prior project(s) as a prime contractor, subcontractor or sub-subcontractor.

■ **Hazmat Work:** Hazmat Work is any item of work in the Bid Schedule that begins with the prefix 8.01. The entity that will perform any Hazmat Work must, within the last three (3) consecutive years prior to the bid opening, have successfully completed in a timely fashion at least five (5) projects similar in scope and type to the required work.

☐ **Pile, CFA Pile, and/or Mini-Pile Work:** The entity that will perform the Pile, CFA Pile and/or Mini-Pile Work must, within the last three (3) consecutive years prior to the bid opening, have successfully completed in a timely fashion at least two (2) projects similar in scope and type to the required work.

For professional services in connection with Pile Work, (i.e., engineering and inspection services), the individual who will perform the required services must be a Professional Engineer licensed by the state of New York. Such individual must also comply with the above requirements for prior projects.

☐ **Construction Report, Monitoring And Post-Construction Report, and Continuous Real-Time Monitoring For Vibrations And Movements And Post-Construction Report Work:** The entity that will perform the Construction Report, Monitoring For Vibrations And Movements, and Post-Construction Report Work must, within the last three (3) consecutive years prior to the bid opening, have successfully completed in a timely fashion at least two (2) projects similar in scope and type to the required work.

For professional services in connection with Reporting and Monitoring Work, (i.e., engineering and inspection services), the individual who will perform the required services must be a Professional Engineer licensed by the state of New York. Such individual must also comply with the above requirements for prior projects.

☐ **OTHER:** _____

_____

(C) **SPECIFICATIONS:** In the event of any conflict, omission or inconsistency between (1) the Specifications and/or Contract Drawings, and (2) the Special Experience Requirements in Section (B) of the Special Notice To Bidders, the special experience listed in the Specifications and/or Contract Drawings shall be controlling. The Special Experience Requirements in Section (B) of this Special Notice To Bidders are only for the convenience of the bidders.

(D) **SUBMISSION REQUIREMENTS:** For each project submitted to demonstrate compliance with the Special Experience Requirements, the bidder must complete and submit the Qualification Form included in the Bid Booklet. The City will only evaluate a project if the following criteria are met: (1) the project is described on the Qualification Form, and (2) all information on the Qualification Form is provided. The City will not evaluate any project which does not comply with the criteria set forth herein, including any project which is referred to only on the resume of an individual.

If Special Experience Requirements are indicated for any specific area of work, the submission requirement set forth above shall apply to the entity that will perform the specific area of work.

(E) **CONDITIONS**: In determining compliance with the Special Experience Requirements for the bidder set forth above, the City may consider prior projects completed by principal(s) or other employees of the bidder while affiliated with another entity, subject to the conditions set forth below.

- Any principal or other employee on whose prior experience the bidder is relying to demonstrate compliance with this special experience requirement must have held the following: (a) a significant management role in the prior entity with which he/she was affiliated, and (b) a significant management role in the entity submitting the bid for a period of six (6) months or more from the inception of the bidding entity.

- The bidder may not rely on the experience of its principals or other employees to demonstrate compliance with any other requirements, including without limitation, financial requirements or requirements for a specified minimum amount of annual gross revenues.

(F) **JOINT VENTURES**: In the event the bidder is a joint venture, at least one firm in the joint venture must meet the above described experience requirements.

Qualification Form

List previous projects completed to meet the special experience requirements for this contract. Please photocopy this form for submission of all required projects.

Name of Contractor: NY Asphalt, Inc.

Name of Project: PUSTA - 1

Location of Project: Corona Park, NY

Owner or Owner's representative (Architect or Engineer) who is familiar with the work performed:

Name: Harry Gordon
Title: EIC Phone Number: 917-605-0977

Brief description of the Project completed or the Project in progress: Construction of new perimeter road bypass. Excavation & removal of 18,000 cy of contaminated fill, self performed all utility installation, curbs, sidewalks & new roadway.

Was the Project performed as a prime, a subcontractor or a sub-subcontractor: Prime

Amount of Contract, Subcontract or Sub-subcontract: 13,514,169.00

Start Date and Completion Date: 02/14/14-10/1/15

****

Name of Contractor: NY Asphalt, Inc.

Name of Project: South Beach Psych DP-1

Location of Project: Staten Island, NY

Owner or Owner's representative (Architect or Engineer) who is familiar with the work performed:

Name: Dominick Tocciaroni (TDX)
Title: Resident Engineer Phone Number:

Brief description of the Project completed or the Project in progress: Mass excavation, road construction, retaining wall installation, deep 48" Sanitary Sewer Jacked. Surcharge pile & building footprint - 160,000 cy

Was the Project performed as a prime, a subcontractor or a sub-subcontractor: Prime

Amount of Contract, Subcontract or Sub-subcontract: 11,000,000 -

Start Date and Completion Date: 3/15/16 - 8/30/16

BID SCHEDULE

NOTE: (1) The Agency may reject a bid if it contains unbalanced bid prices. An unbalanced bid is considered to be one containing lump sum or unit items which do not reflect reasonable actual costs plus a reasonable proportionate share of the Bidder's anticipated profit, overhead costs, and other indirect costs, anticipated for the performance of the items in question.

(2) The following bid prices on Unit Price Contracts are to be paid for the actual quantities of the item numbers in the completed work or structure, and they cover the cost of all work, labor, material, tools, plant and appliances of every description necessary to complete the entire work, as specified, and the removal of all debris, temporary work and appliances.

(3) PLEASE BE SURE A LEGIBLE BID IS ENTERED, IN INK, FOR EACH ITEM.
Alterations must be initialed in ink by the bidder.

(4) The Extended Amount entered in Column 6 shall be the product of the Estimated Quantity in Column 3 times the Unit Price Bid in Column 5.

(5) Prospective bidders must examine the Bid Schedule carefully and, before bidding, must advise the Commissioner, in writing, if any pages are missing, and must request that such missing pages be furnished them. The pages of this Bid Schedule are numbered consecutively, as follows:
B - 3 Through B - 40

PLEASE BE SURE A LEGIBLE BID IS ENTERED FOR EACH ITEM.
THE BIDDER SHALL INSERT THE TOTAL BID PRICE IN
THE BID FORM ON PAGE C-4 OF THIS BID BOOKLET.

NEW YORK CITY DEPARTMENT OF DESIGN AND CONSTRUCTION
DIVISION OF INFRASTRUCTURE - BUREAU OF DESIGN

PROJECT ID: HWXP136B
CONTRACT PIN: 8502016HW0061C

BID SCHEDULE FORM

COL. 1 SEQ. NO	COL. 2 ITEM NUMBER and DESCRIPTION	COL. 3 ENGINEER'S ESTIMATE OF QUANTITY	COL. 4 UNIT	COL. 5 UNIT PRICE (IN FIGURES) DOLLARS	CTS	COL. 6 EXTENDED AMOUNT (IN FIGURES) DOLLARS	CTS
001	**4.02 AF-R** ASPHALTIC CONCRETE WEARING COURSE, 2" THICK	19,670.00	S.Y.	$20.	00	$393,400	00
002	**4.02 AG** ASPHALTIC CONCRETE WEARING COURSE, 3" THICK	23,000.00	S.Y.	$26	00	$598,000	00
003	**4.02 CB** ASPHALTIC CONCRETE MIXTURE	2,860.00	TONS	$147.	50	$421,850	00
004	**4.04 H** CONCRETE BASE FOR PAVEMENT, VARIABLE THICKNESS FOR TRENCH RESTORATION, (HIGH-EARLY STRENGTH)	230.00	C.Y.	$250	00	$57,500	00
005	**4.04 HD** CONCRETE BASE FOR PAVEMENT, 9" THICK (HIGH-EARLY STRENGTH)	6,060.00	C.Y.	$250	00	$1,515,000	00
006	**4.05 AX** HIGH-EARLY STRENGTH REINFORCED CONCRETE PAVEMENT (BUS STOPS)	350.00	C.Y.	$510	00	178,000	00

NEW YORK CITY DEPARTMENT OF DESIGN AND CONSTRUCTION
DIVISION OF INFRASTRUCTURE - BUREAU OF DESIGN

PROJECT ID: HWXP136B
CONTRACT PIN: 8502016HW0061C

BID SCHEDULE FORM

COL. 1 SEQ. NO	COL. 2 ITEM NUMBER and DESCRIPTION	COL. 3 ENGINEER'S ESTIMATE OF QUANTITIY	COL. 4 UNIT	COL. 5 UNIT PRICE (IN FIGURES) DOLLARS	CTS	COL. 6 EXTENDED AMOUNT (IN FIGURES) DOLLARS	CTS
007	**4.05 BX** HIGH-EARLY STRENGTH REINFORCED CONCRETE PAVEMENT (FULL WIDTH PAVEMENT)	40.00	C.Y.	$450	00	$18,000	00
008	**4.06 SC** SELF-CONSOLIDATING CONCRETE IN STRUCTURES	1,680.00	C.Y.	$725.	00	$1,218,000	00
009	**4.09 AE** STRAIGHT STEEL FACED CONCRETE CURB (21" DEEP)	13,850.00	L.F.	$77.	00	$1,066,450	00
010	**4.09 AF** STRAIGHT STEEL FACED CONCRETE CURB (27" DEEP)	850.00	L.F.	$85	00	~~$4,250~~ $72,250	~~00~~ (KT) 00
011	**4.09 BE** DEPRESSED STEEL FACED CONCRETE CURB (21" DEEP)	50.00	L.F.	$85	00	$4,250	00
012	**4.09 CE** CORNER STEEL FACED CONCRETE CURB (21" DEEP)	1,440.00	L.F.	$96.	25	$138,600	00

NEW YORK CITY DEPARTMENT OF DESIGN AND CONSTRUCTION
DIVISION OF INFRASTRUCTURE - BUREAU OF DESIGN

PROJECT ID: HWXP136B
CONTRACT PIN: 8502016HW0061C

BID SCHEDULE FORM

COL. 1 SEQ. NO	COL. 2 ITEM NUMBER and DESCRIPTION	COL. 3 ENGINEER'S ESTIMATE OF QUANTITY	COL. 4 UNIT	COL. 5 UNIT PRICE (IN FIGURES) DOLLARS	COL. 5 CTS	COL. 6 EXTENDED AMOUNT (IN FIGURES) DOLLARS	COL. 6 CTS
013	4.11 CA FILL, PLACE MEASUREMENT	100.00	C.Y.	$57.	80	$5,780	00
014	4.13 AAS 4" CONCRETE SIDEWALK (UNPIGMENTED)	176,760.00	S.F.	$11.	00	$1,944,360	00
015	4.13 BAS 7" CONCRETE SIDEWALK (UNPIGMENTED)	5,550.00	S.F.	$13.	00	$72,150	00
016	4.13 DE EMBEDDED PREFORMED DETECTABLE WARNING UNITS	1,480.00	S.F.	$29.	50	$43,660	00
017	4.14 STEEL REINFORCEMENT BARS	233,250.00	LBS.	$	60	$139,950	00
018	4.14 W WELDED STEEL WIRE FABRIC	500.00	LBS.	$11.	80	$5,900.	00

NEW YORK CITY DEPARTMENT OF DESIGN AND CONSTRUCTION
DIVISION OF INFRASTRUCTURE - BUREAU OF DESIGN

PROJECT ID: HWXP136B
CONTRACT PIN: 8502016HW0061C

BID SCHEDULE FORM

COL 1 SEQ. NO	COL 2 ITEM NUMBER and DESCRIPTION	COL 3 ENGINEER'S ESTIMATE OF QUANTITY	COL 4 UNIT	COL 5 UNIT PRICE (IN FIGURES) DOLLARS	COL 5 CTS	COL 6 EXTENDED AMOUNT (IN FIGURES) DOLLARS	COL 6 CTS
019	**4.15** TOPSOIL	1,750.00	C.Y.	$88.	50	$154,875	00
020	**4.15 SS** STRUCTURAL SOIL FOUNDATION MATERIAL	310.00	C.Y.	$200.	60	$ 62,186	00
021	**4.16 AA** TREES REMOVED (4" TO UNDER 12" CALIPER)	14.00	EACH	$224.	20	3,138.	80
022	**4.16 AB** TREES REMOVED (12" TO UNDER 18" CALIPER)	1.00	EACH	$413.	00	413.	00
023	**4.16 BA510** TREES PLANTED, 2-1/2" TO 3" CALIPER, ALL TYPES, IN 5' X 10' TREE PITS	13.00	EACH	967.	60	12,578.	80
024	**4.16 CAA** TREES PLANTED, 2-1/2" TO 3" CALIPER, ALL TYPES	22.00	EACH	938.	10	20,638	20

NEW YORK CITY DEPARTMENT OF DESIGN AND CONSTRUCTION
DIVISION OF INFRASTRUCTURE - BUREAU OF DESIGN

PROJECT ID: HWXP136B
CONTRACT PIN: 8502016HW0061C

BID SCHEDULE FORM

COL. 1 SEQ. NO	COL. 2 ITEM NUMBER and DESCRIPTION	COL. 3 ENGINEER'S ESTIMATE OF QUANTITTY	COL. 4 UNIT	COL. 5 UNIT PRICE (IN FIGURES) DOLLARS	CTS	COL. 6 EXTENDED AMOUNT (IN FIGURES) DOLLARS	CTS
025	**4.16 STUMP** STUMP REMOVAL	7.00	UNITS	$236	00	$1,652	00
026	**4.18 A** MAINTENANCE TREE PRUNING (UNDER 12" CAL.)	97.00	EACH	$165	20	$16,024	40
027	**4.18 B** MAINTENANCE TREE PRUNING (12" TO UNDER 18" CAL.)	17.00	EACH	$318	60	$5,416	20
028	**4.18 C** MAINTENANCE TREE PRUNING (18" TO UNDER 24" CAL.)	5.00	EACH	$460	20	$2,301.	00
029	**4.21** TREE CONSULTANT	1,260.00	P/HR	$118	00	$148,680	00
030	**50.31CE15** 15" E.S.V.P. COMBINED SEWER, ENCASED IN CONCRETE	100.00	L.F.	650	00	$65,000	00

NEW YORK CITY DEPARTMENT OF DESIGN AND CONSTRUCTION
DIVISION OF INFRASTRUCTURE - BUREAU OF DESIGN

PROJECT ID: HWXP136B
CONTRACT PIN: 8502016HW0061C

BID SCHEDULE FORM

COL. 1 SEQ. NO	COL. 2 ITEM NUMBER and DESCRIPTION	COL. 3 ENGINEER'S ESTIMATE OF QUANTITY	COL. 4 UNIT	COL. 5 UNIT PRICE (IN FIGURES) DOLLARS	CTS	COL. 6 EXTENDED AMOUNT (IN FIGURES) DOLLARS	CTS
031	50.31SE12 12" E.S.V.P. SANITARY SEWER, ENCASED IN CONCRETE	70.00	L.F.	$1,000.	00	$70,000	00
032	51.21C000000C CLEANOUT MANHOLE	4.00	EACH	$16,000	00	$64,000	00
033	51.21S0A1000V STANDARD MANHOLE TYPE A-1	4.00	EACH	$26,000	00	$104,000	00
034	51.21S0A2000V STANDARD MANHOLE TYPE A-2	2.00	EACH	$25,000	00	$50,000	00
035	51.23RF REPLACEMENT OF EXISTING MANHOLE FRAME AND COVER	20.00	EACH	$1,180	00	$23,600	00
036	51.41S001 STANDARD CATCH BASIN, TYPE 1	7.00	EACH	$9,000	00	$63,000	00

NEW YORK CITY DEPARTMENT OF DESIGN AND CONSTRUCTION
DIVISION OF INFRASTRUCTURE - BUREAU OF DESIGN

PROJECT ID: HWXP136B
CONTRACT PIN: 8502016HW0061C

BID SCHEDULE FORM

COL. 1 SEQ. NO	COL. 2 ITEM NUMBER and DESCRIPTION	COL. 3 ENGINEER'S ESTIMATE OF QUANTITY	COL. 4 UNIT	COL. 5 UNIT PRICE (IN FIGURES) DOLLARS	CTS	COL. 6 EXTENDED AMOUNT (IN FIGURES) DOLLARS	CTS
037	51.41W000 SHALLOW CATCH BASIN	4.00	EACH	$8,000	00	$32,000	00
038	51.42S1SO INCREMENTAL COST OF STANDARD CATCH BASIN TYPE 3 WITH CURB PIECE IN LIEU OF STANDARD CATCH BASIN TYPE 1	1.00	EACH	$5,310	00	$5,310	00
039	52.11D12 12" DUCTILE IRON PIPE BASIN CONNECTION	390.00	L.F.	$900.	00	$351,000	00
040	52.31V06C15 6" E.S.V.P. SPUR FOR HOUSE CONNECTION ON 15" E.S.V.P. COMBINED SEWER	1.00	EACH	$666.	70	$666.	70
041	52.41V06R 6" E.S.V.P. HOUSE CONNECTION DRAIN ON CONCRETE CRADLE (RECONNECTION)	10.00	L.F.	$236	00	2,360	00
042	53.11DR TELEVISION INSPECTION AND DIGITAL AUDIO-VISUAL RECORDING OF SEWERS	170.00	L.F.	$7.	10	1,207	00

NEW YORK CITY DEPARTMENT OF DESIGN AND CONSTRUCTION
DIVISION OF INFRASTRUCTURE - BUREAU OF DESIGN

PROJECT ID: HWXP136B
CONTRACT PIN: 8502016HW0061C

BID SCHEDULE FORM

COL. 1 SEQ. NO	COL. 2 ITEM NUMBER and DESCRIPTION	COL. 3 ENGINEER'S ESTIMATE OF QUANTITY	COL. 4 UNIT	COL. 5 UNIT PRICE (IN FIGURES) DOLLARS	CTS	COL. 6 EXTENDED AMOUNT (IN FIGURES) DOLLARS	CTS
043	6.02 AAN UNCLASSIFIED EXCAVATION	11,250.00	C.Y.	~~$100~~ $115	~~00~~ 00	~~$1,125,000~~ $1,293,750	~~00~~ 00
044	6.02 XHEC INCREMENTAL COST FOR MODIFYING WORK METHODS NEAR (WITHIN 3 FEET OF) TRANSIT FACILITIES AND BUILDING VAULTS	240.00	C.Y.	$118	00	$28,320	00
045	6.02 XSCW INCREMENTAL COST FOR USING SPECIAL CARE WORK METHODS NEAR (FROM 3 FEET TO 50 FEET) TRANSIT FACILITIES	11,010.00	C.Y.	$29	00	$319,290	00
046	6.06 AB GRANITE BLOCK SIDEWALK (GROUTED JOINTS) (FURNISH BLOCK)	820.00	S.Y.	$88.	50	$72,570	00
047	6.22 F ADDITIONAL HARDWARE	5,000.00	LBS.	$1.	20	$6,000	00
048	6.23 AB REMOVE EXISTING FIRE ALARM POST	1.00	EACH	$462	00	$462	00

NEW YORK CITY DEPARTMENT OF DESIGN AND CONSTRUCTION
DIVISION OF INFRASTRUCTURE - BUREAU OF DESIGN

PROJECT ID: HWXP136B
CONTRACT PIN: 8502016HW0061C

BID SCHEDULE FORM

COL. 1 SEQ. NO	COL. 2 ITEM NUMBER and DESCRIPTION	COL. 3 ENGINEER'S ESTIMATE OF QUANTITY	COL. 4 UNIT	COL. 5 UNIT PRICE (IN FIGURES) DOLLARS	COL. 5 CTS	COL. 6 EXTENDED AMOUNT (IN FIGURES) DOLLARS	COL. 6 CTS
049	**6.23 BA** FURNISH AND INSTALL FIRE ALARM POST AND SUBBASE IN ACCORDANCE WITH F.D. STD. DWG. #141	1.00	EACH	$1,716	00	$1716.	00
050	**6.23 BFC** FURNISH AND INSTALL FIRE DEPARTMENT 12 WIRE TERMINAL BOX AND TERMINATE FIRE ALARM CABLES	1.00	EACH	$1,331	00	$1,331.	00
051	**6.23 BGSE** FURNISH AND INSTALL 4" P.V.C. CONDUIT, SCHEDULE 40, U.L. 651 (WITH PAVEMENT EXCAVATION)	12.00	L.F.	$15	40	$184.	80
052	**6.23 BP** FURNISH AND INSTALL FIRE ALARM PEDESTAL BUMPERS (2 REQUIRED PER SET) IN ACCORDANCE WITH F.D. STD. DWG. #168	1.00	SETS	$1,067	00	$1,067	00
053	**6.25 RS** TEMPORARY SIGNS	680.00	S.F.	$8.	25	$5,610	00
054	**6.26** TIMBER CURB	13,070.00	L.F.	$4.	75	$62,082	50

NEW YORK CITY DEPARTMENT OF DESIGN AND CONSTRUCTION
DIVISION OF INFRASTRUCTURE - BUREAU OF DESIGN

PROJECT ID: HWXP136B
CONTRACT PIN: 8502016HW0061C

BID SCHEDULE FORM

COL 1 SEQ. NO	COL 2 ITEM NUMBER and DESCRIPTION	COL 3 ENGINEER'S ESTIMATE OF QUANTITY	COL 4 UNIT	COL 5 UNIT PRICE (IN FIGURES) DOLLARS	COL 5 CTS	COL 6 EXTENDED AMOUNT (IN FIGURES) DOLLARS	COL 6 CTS
055	6.28 AA LIGHTED TIMBER BARRICADES	850.00	L.F.	$4.	75	$4,037	50
056	6.36 DR STRUCTURAL REPAIR AND ADJUSTMENT OF UTILITY STRUCTURES	10.00	C.Y.	$826	00	$8,260.	00
057	6.40 D ENGINEER'S FIELD OFFICE (TYPE D)	30.00	MONTH	$4,720	00	$141,600	00
058	6.43 PHOTOGRAPHS	1,000.00	SETS	$23.	60	$23,600	00
059	6.44 THERMOPLASTIC REFLECTORIZED PAVEMENT MARKINGS (4" WIDE)	102,300.00	L.F.	$1.	42	$145,266	00
060	6.49 TEMPORARY PAVEMENT MARKINGS (4" WIDE)	10,230.00	L.F.	$1.	42	14,526	60

NEW YORK CITY DEPARTMENT OF DESIGN AND CONSTRUCTION
DIVISION OF INFRASTRUCTURE - BUREAU OF DESIGN

PROJECT ID: HWXP136B
CONTRACT PIN: 8502016HW0061C

BID SCHEDULE FORM

COL. 1 SEQ. NO.	COL. 2 ITEM NUMBER and DESCRIPTION	COL. 3 ENGINEER'S ESTIMATE OF QUANTITY	COL. 4 UNIT	COL. 5 UNIT PRICE (IN FIGURES) DOLLARS	CTS	COL. 6 EXTENDED AMOUNT (IN FIGURES) DOLLARS	CTS
061	6.50 CLEANING OF DRAINAGE STRUCTURES	7.00	EACH	$1,180	00	$8,260	00
062	6.52 FED UNIFORMED FLAGPERSON PRICE BID SHALL BE FOR THE FIXED SUM OF $ 312,000.00	1.00	F.S.	312,000	00	$312,000	00
063	6.53 REMOVE EXISTING LANE MARKINGS (4" WIDE)	5,090.00	L.F.	$1.	20	$6,108	00
064	6.55 SAWCUTTING EXISTING PAVEMENT	8,570.00	L.F.	$11.	80	$101,126	00
065	6.67 SUBBASE COURSE, SELECT GRANULAR MATERIAL	720.00	C.Y.	$59.	00	$42,480	00

NEW YORK CITY DEPARTMENT OF DESIGN AND CONSTRUCTION
DIVISION OF INFRASTRUCTURE - BUREAU OF DESIGN

PROJECT ID: HWXP136B
CONTRACT PIN: 8502016HW0061C

BID SCHEDULE FORM

COL 1 SEQ. NO	COL 2 ITEM NUMBER and DESCRIPTION	COL 3 ENGINEER'S ESTIMATE OF QUANTITITY	COL 4 UNIT	COL 5 UNIT PRICE (IN FIGURES) DOLLARS	COL 5 CTS	COL 6 EXTENDED AMOUNT (IN FIGURES) DOLLARS	COL 6 CTS
066	6.68 PLASTIC FILTER FABRIC	7,050.00	S.Y.	$ 17.	70	$ 124,785	00
067	6.75 GRINDING EXISTING ASPHALTIC CONCRETE WEARING COURSE	4,820.00	C.Y.	$ 84.	00	$ 404,880	00
068	6.82 A REMOVING EXISTING TRAFFIC AND STREET NAME SIGNS	480.00	S.F.	$ 6.	90	$ 3,312	00
069	6.82 B REMOVING EXISTING TRAFFIC AND STREET NAME SIGN POSTS	756.00	L.F.	$ 20.	00	$ 15,120	00
070	6.83 AA FURNISHING NEW NON-REFLECTORIZED TRAFFIC SIGNS	240.00	S.F.	$ 20	00	$ 4,800	00
071	6.83 AB FURNISHING NEW TRAFFIC SIGN POSTS	420.00	L.F.	$ 21.	00	$ 8,820	00

NEW YORK CITY DEPARTMENT OF DESIGN AND CONSTRUCTION
DIVISION OF INFRASTRUCTURE - BUREAU OF DESIGN

PROJECT ID: HWXP136B
CONTRACT PIN: 8502016HW0061C

BID SCHEDULE FORM

COL 1 SEQ. NO	COL 2 ITEM NUMBER and DESCRIPTION	COL 3 ENGINEER'S ESTIMATE OF QUANTITY	COL 4 UNIT	COL 5 UNIT PRICE (IN FIGURES) DOLLARS	CTS	COL 6 EXTENDED AMOUNT (IN FIGURES) DOLLARS	CTS
072	6.83 AR FURNISHING NEW REFLECTORIZED TRAFFIC SIGNS	240.00	S.F.	$23.	00	$5,520	00
073	6.83 BA INSTALLING TRAFFIC SIGNS	480.00	S.F.	$23.	00	11,040	00
074	6.83 BB INSTALLING TRAFFIC SIGN POSTS	420.00	L.F.	$20.	00	8,400	00
075	6.84 B LOLLIPOP TYPE BUS STOP SIGNS PRICE BID SHALL BE FOR THE FIXED SUM OF $ 38,500.00	1.00	F.S.	38,500	00	$38,500	00
076	6.85 A TRAFFIC ENFORCEMENT AGENTS PRICE BID SHALL BE FOR THE FIXED SUM OF $ 1,303,390.65	1.00	F.S.	1,303,390	65	$1,303,390	65

NEW YORK CITY DEPARTMENT OF DESIGN AND CONSTRUCTION
DIVISION OF INFRASTRUCTURE - BUREAU OF DESIGN

PROJECT ID: HWXP136B
CONTRACT PIN: 8502016HW0061C

BID SCHEDULE FORM

COL 1 SEQ. NO	COL 2 ITEM NUMBER and DESCRIPTION	COL 3 ENGINEER'S ESTIMATE OF QUANTITY	COL 4 UNIT	COL 5 UNIT PRICE (IN FIGURES) DOLLARS	COL 5 CTS	COL 6 EXTENDED AMOUNT (IN FIGURES) DOLLARS	COL 6 CTS
077	6.86 AA FURNISHING NEW STREET NAME SIGNS	30.00	S.F.	$ 61.	00	$ 1,830	00
078	6.86 AB FURNISHING NEW STREET NAME SIGN POSTS	336.00	L.F.	$ 20	00	$ 6,720	00
079	6.86 BA INSTALLING STREET NAME SIGNS	30.00	S.F.	$ 61.	00	$ 1,830	00
080	6.86 BB INSTALLING STREET NAME SIGN POSTS	336.00	L.F.	$ 20	00	$ 6,720	00
081	6.87 PLASTIC BARRELS	5,440.00	EACH	$ 1	40	$ 7,616	00
082	6.91 REFLECTIVE CRACKING MEMBRANE (18" WIDE)	15,920.00	L.F.	$ 2.	70	$ 42,984	00

NEW YORK CITY DEPARTMENT OF DESIGN AND CONSTRUCTION
DIVISION OF INFRASTRUCTURE - BUREAU OF DESIGN

PROJECT ID: HWXP136B
CONTRACT PIN: 8502016HW0061C

BID SCHEDULE FORM

COL 1 SEQ. NO	COL 2 ITEM NUMBER and DESCRIPTION	COL 3 ENGINEER'S ESTIMATE OF QUANTITY	COL 4 UNIT	COL 5 UNIT PRICE (IN FIGURES) DOLLARS	COL 5 CTS	COL 6 EXTENDED AMOUNT (IN FIGURES) DOLLARS	COL 6 CTS
083	6.99 AUDIO AND VIDEO DOCUMENTATION SURVEY	1.00	L.S.	$5,900	00	$5,900.	00
084	60.11R612 FURNISHING AND DELIVERING 12-INCH DUCTILE IRON RESTRAINED JOINT PIPE (CLASS 56)	230.00	L.F.	$91	00	$20,930	00
085	60.12D12 LAYING 12-INCH DUCTILE IRON PIPE AND FITTINGS	300.00	L.F.	$900.	00	$270,000	00
086	60.13M0A24 FURNISHING AND DELIVERING DUCTILE IRON MECHANICAL JOINT 24 -INCH DIAMETER AND SMALLER FITTINGS, INCLUDING WEDGE TYPE RETAINER GLANDS	2.00	TONS	$11,000	00	$22,000	00
087	62.14FS FURNISHING, DELIVERING AND INSTALLING HYDRANT FENDERS	10.00	EACH	$531	00	5,310	00

NEW YORK CITY DEPARTMENT OF DESIGN AND CONSTRUCTION
DIVISION OF INFRASTRUCTURE - BUREAU OF DESIGN

PROJECT ID: HWXP136B
CONTRACT PIN: 8502016HW0061C

BID SCHEDULE FORM

COL. 1 SEQ. NO	COL. 2 ITEM NUMBER and DESCRIPTION	COL. 3 ENGINEER'S ESTIMATE OF QUANTITY	COL. 4 UNIT	COL. 5 UNIT PRICE (IN FIGURES) DOLLARS	CTS	COL. 6 EXTENDED AMOUNT (IN FIGURES) DOLLARS	CTS
088	637.9520 FIELD INFORMATION MANAGEMENT SYSTEM PRICE BID SHALL BE FOR THE FIXED SUM OF $ 50,000.00	1.00	F.S.	50,000	00	$50,000	00
089	65.11BR FURNISHING, DELIVERING AND INSTALLING BANDS, RODS, WASHERS, ETC., COMPLETE, FOR RESTRAINING JOINTS	1,000.00	LBS.	$6.	00	$6,000	00
090	65.21PS FURNISHING AND PLACING POLYETHYLENE SLEEVE Unit price bid shall not be less than: $ 0.50	140.00	L.F.	$1.	20	$168.	00
091	65.31FF FURNISHING, DELIVERING AND PLACING FILTER FABRIC Unit price bid shall not be less than: $ 0.10	2,100.00	S.F.	$1.	20	$2,520	06
092	65.71SG FURNISHING, DELIVERING AND PLACING SCREENED GRAVEL OR SCREENED BROKEN STONE BEDDING	10.00	C.Y.	$150	00	$1,500	00

NEW YORK CITY DEPARTMENT OF DESIGN AND CONSTRUCTION
DIVISION OF INFRASTRUCTURE - BUREAU OF DESIGN

PROJECT ID: HWXP136B
CONTRACT PIN: 8502016HW0061C

BID SCHEDULE FORM

COL. 1 SEQ. NO	COL. 2 ITEM NUMBER and DESCRIPTION	COL. 3 ENGINEER'S ESTIMATE OF QUANTITY	COL. 4 UNIT	COL. 5 UNIT PRICE (IN FIGURES) DOLLARS	CTS	COL. 6 EXTENDED AMOUNT (IN FIGURES) DOLLARS	CTS
093	7.01 AB INSTALLING NEW OR RESET EXISTING SIDEWALK SUBWAY FRAMES AND GRATINGS	6,050.00	S.F.	$ 50	00	$ 302,500	00
094	7.01 C FURNISH NEW SIDEWALK SUBWAY FRAMES AND GRATINGS	6,050.00	S.F.	$ 60.	00	$ 363,000	00
095	7.02 EPOXY MORTAR REPAIRS	300.00	C.F.	$ 118.	00	$ 35,400	00
096	7.13 B MAINTENANCE OF SITE Unit price bid shall not be less than: $ 8,000.00	24.00	MONTH	$ 9,440	00	$ 226,560	00
097	7.16 D TEST PITS	85.00	C.Y.	$ 250	00	$ 21,250	00
098	7.36 PEDESTRIAN STEEL BARRICADES	23,470.00	L.F.	$ 4.	75	111,482	50

NEW YORK CITY DEPARTMENT OF DESIGN AND CONSTRUCTION
DIVISION OF INFRASTRUCTURE - BUREAU OF DESIGN

PROJECT ID: HWXP136B
CONTRACT PIN: 8502016HW0061C

BID SCHEDULE FORM

COL. 1 SEQ. NO	COL. 2 ITEM NUMBER and DESCRIPTION	COL. 3 ENGINEER'S ESTIMATE OF QUANTITY	COL. 4 UNIT	COL. 5 UNIT PRICE (IN FIGURES) DOLLARS	CTS	COL. 6 EXTENDED AMOUNT (IN FIGURES) DOLLARS	CTS
099	7.88 A RODENT INFESTATION SURVEY AND MONITORING **Unit price bid shall not be less than: $ 6,000.00**	1.00	L.S.	$6,600	00	$6,600	00
100	7.88 AB RODENT BAIT STATIONS **Unit price bid shall not be less than: $ 60.00**	1,536.00	EACH	$66	00	$101,376	00
101	7.88 AC BAITING OF RODENT BAIT STATIONS **Unit price bid shall not be less than: $ 9.50**	1,536.00	EACH	$13.	20	$20,275	20
102	7.88 AD WATERBUG BAIT APPLICATIONS **Unit price bid shall not be less than: $ 65.00**	192.00	BLOCK	$71.	50	$13,728	00
103	70.31FN FENCING **Unit price bid shall not be less than: $ 2.00**	1,350.00	L.F.	$2.	25	3,037	50
104	70.81CB CLEAN BACKFILL **Unit price bid shall not be less than: $ 15.00**	40.00	C.Y.	35	40	1,416.	00

NEW YORK CITY DEPARTMENT OF DESIGN AND CONSTRUCTION
DIVISION OF INFRASTRUCTURE - BUREAU OF DESIGN

PROJECT ID: HWXP136B
CONTRACT PIN: 8502016HW0061C

BID SCHEDULE FORM

COL. 1 SEQ. NO	COL. 2 ITEM NUMBER and DESCRIPTION	COL. 3 ENGINEER'S ESTIMATE OF QUANTITTIY	COL. 4 UNIT	COL. 5 UNIT PRICE (IN FIGURES) DOLLARS	COL. 5 CTS	COL. 6 EXTENDED AMOUNT (IN FIGURES) DOLLARS	COL. 6 CTS
105	70.91SW12 FURNISHING AND PLACING SHEETING AND BRACING IN TRENCH FOR WATER MAIN PIPE 12-INCH IN DIAMETER AND LESS	2,000.00	S.F.	$3.	54	$7,080	00
106	73.21AC ADDITIONAL CONCRETE **Unit price bid shall not be less than: $ 62.50**	5.00	C.Y.	$354.	00	$1,770	00
107	73.31AE0 ADDITIONAL EARTH EXCAVATION INCLUDING TEST PITS (ALL DEPTHS) **Unit price bid shall not be less than: $ 20.00**	10.00	C.Y.	$200	00	$ 2,000.	00
108	73.41AG ADDITIONAL SELECT GRANULAR BACKFILL **Unit price bid shall not be less than: $ 15.00**	10.00	C.Y.	$200	00	$2,000	00
109	8.01 C1 HANDLING, TRANSPORTING AND DISPOSAL OF NON-HAZARDOUS CONTAMINATED SOIL	2,000.00	TONS	$71	00	$142,000	00
110	8.01 C2 SAMPLING AND TESTING OF CONTAMINATED/POTENTIALLY HAZARDOUS SOIL FOR DISPOSAL PURPOSES	5.00	SETS	$2,124	00	$10,620	00

NEW YORK CITY DEPARTMENT OF DESIGN AND CONSTRUCTION
DIVISION OF INFRASTRUCTURE - BUREAU OF DESIGN

PROJECT ID: HWXP136B
CONTRACT PIN: 8502016HW0061C

BID SCHEDULE FORM

COL 1 SEQ. NO	COL 2 ITEM NUMBER and DESCRIPTION	COL 3 ENGINEER'S ESTIMATE OF QUANTITY	COL 4 UNIT	COL 5 UNIT PRICE (IN FIGURES) DOLLARS	CTS	COL 6 EXTENDED AMOUNT (IN FIGURES) DOLLARS	CTS
111	8.01 H HANDLING, TRANSPORTING AND DISPOSAL OF HAZARDOUS SOIL	10.00	TONS	$295.	00	$2,950.	00
112	8.01 S HEALTH AND SAFETY	1.00	L.S.	$4,790.	00	$4,790.	00
113	8.01 W1 REMOVAL, TREATMENT, AND DISCHARGE/DISPOSAL OF CONTAMINATED WATER	2.00	DAY	$4,130.	00	$8,260.	00
114	8.01 W2 SAMPLING AND TESTING OF CONTAMINATED WATER	2.00	SETS	$678.	50	$1,357.	00
115	8.02 A SPECIAL CARE EXCAVATION AND RESTORATION FOR SIDEWALK WORK	36,760.00	S.F.	$5.	00	$183,800	00
116	8.02 B SPECIAL CARE EXCAVATION AND RESTORATION FOR CURB WORK	5,260.00	L.F.	$20	00	$105,200	00

NEW YORK CITY DEPARTMENT OF DESIGN AND CONSTRUCTION
DIVISION OF INFRASTRUCTURE - BUREAU OF DESIGN

PROJECT ID: HWXP136B
CONTRACT PIN: 8502016HW0061C

BID SCHEDULE FORM

COL. 1 SEQ. NO	COL. 2 ITEM NUMBER and DESCRIPTION	COL. 3 ENGINEER'S ESTIMATE OF QUANTITTY	COL. 4 UNIT	COL. 5 UNIT PRICE (IN FIGURES) DOLLARS	CTS	COL. 6 EXTENDED AMOUNT (IN FIGURES) DOLLARS	CTS
117	8.07 TEMPORARY ALUMINUM PEDESTRIAN BRIDGE	10.00	EACH	$ 3,894	00	$ 38,940.	00
118	8.08 VMS VARIABLE MESSAGE SIGN	1.00	EACH	$ 5,900	00	$ 5,900.	00
119	8.22 D THREE PLY MEMBRANE WATERPROOFING	2,880.00	S.F.	$ 29.	50	$ 84,960	00
120	8.32 BARK CHIP MULCH	2,950.00	S.Y.	$ 20.	00	$ 59,000	00
121	9.00 C EXPLORATORY TEST PITS	100.00	C.F.	4.	75	$ 475.	00

NEW YORK CITY DEPARTMENT OF DESIGN AND CONSTRUCTION
DIVISION OF INFRASTRUCTURE - BUREAU OF DESIGN

PROJECT ID: HWXP136B
CONTRACT PIN: 8502016HW0061C

BID SCHEDULE FORM

COL. 1 SEQ. NO	COL. 2 ITEM NUMBER and DESCRIPTION	COL. 3 ENGINEER'S ESTIMATE OF QUANTITY	COL. 4 UNIT	COL. 5 UNIT PRICE (IN FIGURES) DOLLARS	CTS	COL. 6 EXTENDED AMOUNT (IN FIGURES) DOLLARS	CTS
122	**9.04 HW** ALLOWANCE FOR ANTI-FREEZE ADDITIVE IN CONCRETE PRICE BID SHALL BE FOR THE FIXED SUM OF $ 50,000.00	1.00	F.S.	50,000	00	$50,000	00
123	**9.07 ARB** NON-WOVEN GEOTEXTILE - ROOT BARRIER	2,450.00	S.Y.	$12	00	$29,400	00
124	**9.07 AWB** NON-WOVEN GEOTEXTILE - WEED BARRIER	2,290.00	S.Y.	$10	00	$22,900	00
125	**9.99 M** FLASHING ARROW BOARD	24.00	MONTH	$590	00	$14,160	00
126	**NYC-665.16000011** FURNISH AND INSTALL BOLLARDS	65.00	EACH	$3,600	00	$234,000	00

NEW YORK CITY DEPARTMENT OF DESIGN AND CONSTRUCTION
DIVISION OF INFRASTRUCTURE - BUREAU OF DESIGN

PROJECT ID: HWXP136B
CONTRACT PIN: 8502016HW0061C

BID SCHEDULE FORM

COL. 1 SEQ. NO	COL. 2 ITEM NUMBER and DESCRIPTION	COL. 3 ENGINEER'S ESTIMATE OF QUANTITITY	COL. 4 UNIT	COL. 5 UNIT PRICE (IN FIGURES) DOLLARS	COL. 5 CTS	COL. 6 EXTENDED AMOUNT (IN FIGURES) DOLLARS	COL. 6 CTS
127	SL-20.02.10 FURNISH AND INSTALL STANDARD TYPE ANCHOR BOLT FOUNDATION AS PER DWG J-5253 FOR INSTALLING TYPE "BC", "M", LYRE AND "5TH AVENUE", "GCPW", LAMPPOST.	5.00	EACH	$1067	00	$5,335	00
128	SL-20.02.11 MODIFY STANDARD TYPE ANCHOR BOLT FOUNDATION AS PER DWG J-5253, FOR INSTALLING TYPE "BC", "M", LYRE AND "5TH AVENUE" LAMPPOST.	36.00	EACH	$1,485	00	$53,460	00
129	SL-20.08.01 REMOVE STANDARD TYPE ANCHOR BOLT CONCRETE FOUNDATION	12.00	EACH	$2,950	00	$35,400.	00
130	SL-21.04.14 FURNISH AND INSTALL TYPE "M" LAMPPOST WITH P.E.C. RECEPTACLE, AS PER DRAWING H-5260.	20.00	EACH	$11,800	00	$236,000.	00
131	SL-21.04.16 FURNISH AND INSTALL TYPE "M" TWIN ARM LAMPPOST WITH RECEPTACLE, AS PER DRAWING H-5260	21.00	EACH	$13,200	00	$277,200	00

NEW YORK CITY DEPARTMENT OF DESIGN AND CONSTRUCTION
DIVISION OF INFRASTRUCTURE - BUREAU OF DESIGN

PROJECT ID: HWXP136B
CONTRACT PIN: 8502016HW0061C

BID SCHEDULE FORM

COL 1 SEQ. NO	COL 2 ITEM NUMBER and DESCRIPTION	COL 3 ENGINEER'S ESTIMATE OF QUANTITY	COL 4 UNIT	COL 5 UNIT PRICE (IN FIGURES) DOLLARS	CTS	COL 6 EXTENDED AMOUNT (IN FIGURES) DOLLARS	CTS
132	**SL-21.09.05** REMOVE STANDARD FABRICATED STEEL, SPUN ALUMINUM NO. 10, ETC. WITH ARM(S), LUMINAIRE(S), CONTROL(S) WITH ALL ATTACHMENTS, IF ANY.	41.00	EACH	$803	00	$32,923	00
133	**SL-21.09.08** REMOVE ALL STREET LIGHTING EQUIPMENT FROM TYPE "M-2" TRAFFIC POST (ARM(S), PHOTOELECTRIC CONTROLLER, LUMINAIRE (S), SHAFT EXTENSION, WIRING, ETC.)	4.00	EACH	$462	00	$1,848.	00
134	**SL-22.06.19** FURNISH AND INSTALL MAXIMUM 150 WATT LED TYPE "TEAR DROP" LUMINAIRE	81.00	EACH	$2,376	00	$192,456.	00
135	**SL-24.04.02** FURNISH AND INSTALL TYPE "M" SHAFT EXTENSION AND ARM ASSEMBLY WITH PHOTOELECTRIC CONTROL RECEPTACLE FOR "M-2" TRAFFIC POST, AS PER DRAWING H-5268. M-2 ORNAMENTAL CASTINGS FURNISHED AND INSTALLED BY OTHERS.	6.00	EACH	$3,245	00	$19,470.	00
136	**SL-24.04.04** FURNISH AND INSTALL "M" TWIN ARMS/SHAFT EXTENSION ASSEMBLY WITH P.E.C. RECEPTACLE FOR M-2 TRAFFIC POST AS PER DWG H-5268. M-2 ORNAMENTAL CASTINGS FURNISHED AND INSTALLED BY OTHERS PER UNIT ITEM.	7.00	EACH	$4,730	00	$33,110.	00

NEW YORK CITY DEPARTMENT OF DESIGN AND CONSTRUCTION
DIVISION OF INFRASTRUCTURE - BUREAU OF DESIGN

PROJECT ID: HWXP136B
CONTRACT PIN: 8502016HW0061C

BID SCHEDULE FORM

COL 1 SEQ. NO	COL 2 ITEM NUMBER and DESCRIPTION	COL 3 ENGINEER'S ESTIMATE OF QUANTITY	COL 4 UNIT	COL 5 UNIT PRICE (IN FIGURES) DOLLARS	COL 5 CTS	COL 6 EXTENDED AMOUNT (IN FIGURES) DOLLARS	COL 6 CTS
137	SL-26.01.04 FURNISH AND INSTALL LONG LIFE PHOTO ELECTRIC CONTROL WITH SURGE PROTECTION FOR LED LIGHT	54.00	EACH	$10,450	00	$564,300.	00
138	SL-26.06.02 FURNISH AND INSTALL LED FIRE ALARM LUMINAIRES.	2.00	EACH	$473.	00	$946.	00
139	SL-31.01.03 PAINT "M-2" TRAFFIC POST INCLUDING SHAFT EXTENSION AND ARM	13.00	EACH	$737.	00	$9,581.	00
140	T-1.1 INSTALL TYPE "S" OR "T" FOUNDATION	4.00	EACH	$1,265	00	$5,060.	00
141	T-1.18 REMOVE TYPE "A", "B", "S" OR "T" SERIES FOUNDATION	2.00	EACH	$2,750	00	$5,500.	00
142	T-1.2 INSTALL TYPE "F-1" FOUNDATION	2.00	EACH	$2,860	00	$5,720.	00

NEW YORK CITY DEPARTMENT OF DESIGN AND CONSTRUCTION
DIVISION OF INFRASTRUCTURE - BUREAU OF DESIGN

PROJECT ID: HWXP136B
CONTRACT PIN: 8502016HW0061C

BID SCHEDULE FORM

COL 1 SEQ. NO	COL 2 ITEM NUMBER and DESCRIPTION	COL 3 ENGINEER'S ESTIMATE OF QUANTITTY	COL 4 UNIT	COL 5 UNIT PRICE (IN FIGURES) DOLLARS	CTS	COL 6 EXTENDED AMOUNT (IN FIGURES) DOLLARS	CTS
143	T-1.20 REMOVE TYPE "M" SERIES FOUNDATION	13.00	EACH	$2,750	00	$35,750	00
144	T-1.3 INSTALL TYPE "M2-5S" FOUNDATION	18.00	EACH	$2,860	00	$51,480.	00
145	T-1.6 INSTALL TYPE "M2-5T" FOUNDATION	8.00	EACH	$2,860	00	$22,880	00
146	T-2.1 INSTALL TYPE "S-1" OR "T-1" SERIES POST	3.00	EACH	$462	00	$1,386.	00
147	T-2.15 REORIENT MAST ARM	2.00	EACH	$462.	00	$924.	00
148	T-2.16 FURNISH, INSTALL, MAINTAIN AND REMOVE TEMPORARY POST OR PYLON WITH SIGNALS	5.00	EACH	$1,331		$6,655.	00

NEW YORK CITY DEPARTMENT OF DESIGN AND CONSTRUCTION
DIVISION OF INFRASTRUCTURE - BUREAU OF DESIGN

PROJECT ID: HWXP136B
CONTRACT PIN: 8502016HW0061C

BID SCHEDULE FORM

COL. 1 SEQ. NO	COL. 2 ITEM NUMBER and DESCRIPTION	COL. 3 ENGINEER'S ESTIMATE OF QUANTITY	COL. 4 UNIT	COL. 5 UNIT PRICE (IN FIGURES) DOLLARS	CTS	COL. 6 EXTENDED AMOUNT (IN FIGURES) DOLLARS	CTS
149	T-2.2 INSTALL TYPE "S-14" POST	2.00	EACH	$462	00	$924.	00
150	T-2.22 REMOVE TYPE "S-1" OR "T-1" SERIES POST	2.00	EACH	$418.		$836.	00
151	T-2.24 REMOVE TYPE "M" SERIES POST	13.00	EACH	$924.	00	$12,012	00
152	T-2.28 REMOVE MAST ARM FROM ANY POST	5.00	EACH	$528.	00	$2,640.	00
153	T-2.4 INSTALL TYPE "M-2" POST	21.00	EACH	$2,310	00	$48,510	00
154	T-2.7 INSTALL SHAFT ON "M-2" POST	1.00	EACH	$803	00	$803.	00

NEW YORK CITY DEPARTMENT OF DESIGN AND CONSTRUCTION
DIVISION OF INFRASTRUCTURE - BUREAU OF DESIGN

PROJECT ID: HWXP136B
CONTRACT PIN: 8502016HW0061C

BID SCHEDULE FORM

COL 1 SEQ. NO	COL 2 ITEM NUMBER and DESCRIPTION	COL 3 ENGINEER'S ESTIMATE OF QUANTITY	COL 4 UNIT	COL 5 UNIT PRICE (IN FIGURES) DOLLARS	COL 5 CTS	COL 6 EXTENDED AMOUNT (IN FIGURES) DOLLARS	COL 6 CTS
155	T-20000 FURNISH TEN FOOT ALUMINUM SIGNAL POST TYPE "S-1"	3.00	EACH	$ 814	00	$ 2,442.	00
156	T-20020 a) FURNISH 3/4" ANCHOR BOLT ASSEMBLIES FOR S-1 (EACH) (3 REQUIRED PER POST)	9.00	EACH	$ 30	80	$ 277.	20
157	T-20021 b) FURNISH 1" ANCHOR BOLT ASSEMBLIES FOR F-1 (EACH) (4 REQUIRED PER POST)	8.00	EACH	$ 50.	60	$ 404.	80
158	T-20160 FURNISH 20 FOOT SIGNAL MAST ARM POLE ASSEMBLY TYPE "M-2"	20.00	EACH	$ 6,457.	00	$ 129,140	00
159	T-20184 a) FURNISH 5' EXTENSION ARM ASSEMBLY WITH FITTINGS	10.00	EACH	$ 737.	00	$ 7,370	00
160	T-20220 c) FURNISH 1-1/4" ANCHOR BOLT ASSEMBLIES FOR M-2 (EACH) (4 REQUIRED PER POST)	1,000.00	EACH	$ 73.	70	$ 73,700	00

NEW YORK CITY DEPARTMENT OF DESIGN AND CONSTRUCTION
DIVISION OF INFRASTRUCTURE - BUREAU OF DESIGN

PROJECT ID: HWXP136B
CONTRACT PIN: 8502016HW0061C

BID SCHEDULE FORM

COL. 1 SEQ. NO	COL. 2 ITEM NUMBER and DESCRIPTION	COL. 3 ENGINEER'S ESTIMATE OF QUANTITTY	COL. 4 UNIT	COL. 5 UNIT PRICE (IN FIGURES) DOLLARS	CTS	COL. 6 EXTENDED AMOUNT (IN FIGURES) DOLLARS	CTS
161	T-20640 FURNISH ALUMINUM TRAFFIC SIGNAL POST TYPE "S-14"	2.00	EACH	$ 979.	00	$ 1,958.	00
162	T-3.1 INSTALL "ONE-WAY" SIGNAL UNIT ON MAST ARM OR TOP OF TRAFFIC POST	29.00	EACH	$ 346.	50	$ 10,048	50
163	T-3.15 HOOD ONE SIGNAL HEAD	2.00	EACH	$ 242.	00	$ 484.	00
164	T-3.18 REMOVE SIGNAL HEAD FROM ANY TYPE POST	21.00	EACH	$ 286.	00	$ 6,006	00
165	T-3.2 INSTALL "ONE-WAY" SIGNAL UNIT ON THE SHAFT OF ANY POST	7.00	EACH	$ 374	00	$ 2,618.	00
166	T-3.21 REMOVE PEDESTRIAN SIGNAL OR SIGN UNIT OR OTHER ILLUMINATED SIGNS FROM ANY POST	25.00	EACH	$ 231.		$ 5,775.	00

NEW YORK CITY DEPARTMENT OF DESIGN AND CONSTRUCTION
DIVISION OF INFRASTRUCTURE - BUREAU OF DESIGN

PROJECT ID: HWXP136B
CONTRACT PIN: 8502016HW0061C

BID SCHEDULE FORM

COL 1 SEQ. NO	COL 2 ITEM NUMBER and DESCRIPTION	COL 3 ENGINEER'S ESTIMATE OF QUANTITY	COL 4 UNIT	COL 5 UNIT PRICE (IN FIGURES) DOLLARS	COL 5 CTS	COL 6 EXTENDED AMOUNT (IN FIGURES) DOLLARS	COL 6 CTS
167	T-3.37 INSTALL SIGNAL ON MAST ARM USING RIGID MOUNT BRACKETS	8.00	EACH	$ 825	00	$ 6,600.	00
168	T-3.6 INSTALL PEDESTRIAN SIGNAL ON ANY TYPE POST	56.00	EACH	$ 297.	00	$ 16,632	00
169	T-31150 FURNISH "1SA" ALUMINUM DIE CASTINGS AND ASSEMBLY FOR POST SIGNAL MOUNTING	2.00	EACH	$ 90.	20	$ 180.	40
170	T-31200 e) "VB" ASSEMBLY *ASSEMBLY IS EQUAL TO ONE PAIR	7.00	EACH	$ 88.	00	$ 616	00
171	T-31205 FURNISH MAST ARM SIGNAL MOUNTING ASSEMBLY - a) "1MS"	15.00	EACH	$ 57.	20	$ 858	00
172	T-31210 h) "HUB" ASSEMBLY *ASSEMBLY IS EQUAL TO ONE PAIR	37.00	EACH	$ 30.	80	1,139	60

NEW YORK CITY DEPARTMENT OF DESIGN AND CONSTRUCTION
DIVISION OF INFRASTRUCTURE - BUREAU OF DESIGN

PROJECT ID: HWXP136B
CONTRACT PIN: 8502016HW0061C

BID SCHEDULE FORM

COL. 1 SEQ. NO	COL. 2 ITEM NUMBER and DESCRIPTION	COL. 3 ENGINEER'S ESTIMATE OF QUANTITY	COL. 4 UNIT	COL. 5 UNIT PRICE (IN FIGURES) DOLLARS	CTS	COL. 6 EXTENDED AMOUNT (IN FIGURES) DOLLARS	CTS
173	T-31215 b) "2MS"	6.00	EACH	$ 253.	00	$ 1,518.	00
174	T-31245 FURNISH RIGID MOUNT SIGNAL BRACKETS	8.00	EACH	$ 277.	20	$ 2,217.	60
175	T-31340 f) "VB-P" ASSEMBLY *ASSEMBLY IS EQUAL TO ONE PAIR	4.00	EACH	$ 99.	00	$ 396.	00
176	T-31351 g) "VB-2P" ASSEMBLY *ASSEMBLY IS EQUAL TO ONE PAIR	26.00	EACH	$ 267.	30	$ 6,949.	80
177	T-31500L FURNISH ADJUSTABLE 3 SECTION 1-WAY, DIE CAST ALUMINUM TRAFFIC SIGNALS 12" - W/LED LENS	42.00	EACH	$ 649.	00	$ 27,258.	00
178	T-31501AA FURNISH 12" AMBER ARROW LED (AS PER NYC SPEC)	4.00	EACH	$ 121.	00	$ 484.	00

NEW YORK CITY DEPARTMENT OF DESIGN AND CONSTRUCTION
DIVISION OF INFRASTRUCTURE - BUREAU OF DESIGN

PROJECT ID: HWXP136B
CONTRACT PIN: 8502016HW0061C

BID SCHEDULE FORM

COL. 1 SEQ. NO	COL. 2 ITEM NUMBER and DESCRIPTION	COL. 3 ENGINEER'S ESTIMATE OF QUANTITY	COL. 4 UNIT	COL. 5 UNIT PRICE (IN FIGURES) DOLLARS	CTS	COL. 6 EXTENDED AMOUNT (IN FIGURES) DOLLARS	CTS
179	T-31501GA FURNISH 12 INCH GREEN ARROW LED (AS PER NYC SPECIFICATION)	4.00	EACH	$121.	00	$484.	00
180	T-33000L FURNISH POLYCARBONATE INCANDESCENT PED SIGNAL W/LED LENS	14.00	EACH	$594.	00	$8,316.	00
181	T-33001-L FURNISH POLYCARBONATE PEDESTRIAN SIGNAL (16 X 16) W/LED COUNT LENS (SPECIFICATION A-L)	42.00	EACH	$660	00	$27,720.	00
182	T-4.22 INSTALL ANY TYPE OF ADVANCED SOLID STATE TRAFFIC SIGNAL CONTROLLER AND CABINET ON METAL POLE	4.00	EACH	$1,507	00	$6,028	00
183	T-4.8 REMOVE ONE CONTROL BOX AND CONTROLLER FROM ANY POST OR SUPPORT	3.00	EACH	$924.	00	$2,772	00
184	T-5.17 FURNISH AND INSTALL 2" RIGID CONDUIT ON A POST	80.00	L.F.	$77.	00	$6,160	00

NEW YORK CITY DEPARTMENT OF DESIGN AND CONSTRUCTION
DIVISION OF INFRASTRUCTURE - BUREAU OF DESIGN

PROJECT ID: HWXP136B
CONTRACT PIN: 8502016HW0061C

BID SCHEDULE FORM

COL. 1 SEQ. NO	COL. 2 ITEM NUMBER and DESCRIPTION	COL. 3 ENGINEER'S ESTIMATE OF QUANTITY	COL. 4 UNIT	COL. 5 UNIT PRICE (IN FIGURES) DOLLARS	CTS	COL. 6 EXTENDED AMOUNT (IN FIGURES) DOLLARS	CTS
185	T-5.32 RESTORING PERMANENT ROADWAY (INCLUDING SAWCUT)	50.00	L.F.	$77.	00	$3,850	00
186	T-5.50 FURNISH AND INSTALL 2" HDPE UNDERGROUND CONDUIT IN PAVED ROADWAY	50.00	L.F.	$44.	00	$2,200	00
187	T-5.52 FURNISH AND INSTALL 2" HDPE UNDERGROUND CONDUIT IN UNPAVED AREA	6,000.00	L.F.	$33.	00	$198,000	00
188	T-6.1 INSTALL CABLE (INCLUDES OVERHEAD)	1,500.00	L.F.	$8.	25	$12,375	00
189	T-6.10 REMOVE CABLE (INCLUDES OVERHEAD)	3,000.00	L.F.	$6.	60	$19,800	00
190	T-6.2 INSTALL MULTIPLE CABLE (INCLUDES OVERHEAD)	4,000.00	L.F.	$8.	80	$35,200	00

NEW YORK CITY DEPARTMENT OF DESIGN AND CONSTRUCTION
DIVISION OF INFRASTRUCTURE - BUREAU OF DESIGN

PROJECT ID: HWXP136B
CONTRACT PIN: 8502016HW0061C

BID SCHEDULE FORM

COL. 1 SEQ. NO	COL. 2 ITEM NUMBER AND DESCRIPTION	COL. 3 ENGINEER'S ESTIMATE OF QUANTITY	COL. 4 UNIT	COL. 5 UNIT PRICE (IN FIGURES) DOLLARS	CTS	COL. 6 EXTENDED AMOUNT (IN FIGURES) DOLLARS	CTS
191	**T-60000B** FURNISH 2 c # 10B (BREAKDOWN = 2#10 WITH 3RD WIRE FOR GROUNDING).	4,000.00	L.F.	$ 2.	75	$ 11,000.	00
192	**T-60040** c) 7 CONDUCTOR, 14 A.W.G.	2,000.00	L.F.	$ 2.	20	$ 4,400.	00
193	**T-60190** e) 13 CONDUCTOR, 14 A.W.G.	5,000.00	L.F.	$ 3.	60	$ 18,000	00
194	**T-7.53** REMOVE (2418) HAND BOX OR PULL BOX IN PAVED SIDEWALK	5.00	EACH	$ 550	00	$ 2,750	00
195	**T-7.68** FURNISH AND INSTALL (2448) HANDBOX OR PULL BOX IN PAVED SIDEWALK	14.00	EACH	$ 5,088	00	$ 71,232.	00
196	**T-79999** FURNISH ADVANCED SOLID STATE TRF CONTROLLER (6 LOAD SWITCH).	1.00	EACH	$ 16,258	00	$ 16,258	00

NEW YORK CITY DEPARTMENT OF DESIGN AND CONSTRUCTION
DIVISION OF INFRASTRUCTURE - BUREAU OF DESIGN

PROJECT ID: HWXP136B
CONTRACT PIN: 8502016HW0061C

BID SCHEDULE FORM

COL. 1 SEQ. NO	COL. 2 ITEM NUMBER and DESCRIPTION	COL. 3 ENGINEER'S ESTIMATE OF QUANTITY	COL. 4 UNIT	COL. 5 UNIT PRICE (IN FIGURES) DOLLARS	COL. 5 CTS	COL. 6 EXTENDED AMOUNT (IN FIGURES) DOLLARS	COL. 6 CTS
197	T-8.10 RELOCATE CONCRETE PYLON WITH POST	14.00	EACH	$1,166	00	$16,324.	00
198	T-8.8 INSTALL CONCRETE PYLON	14.00	EACH	$968.	00	$13,552	00
199	T-8.9 REMOVE CONCRETE PYLON	14.00	EACH	$506.	00	$7,084	00
200	T-81000 FURNISH CONCRETE PYLON	14.00	EACH	$1221.	00	$17,094.	00
201	UTL-6.01.1 GAS MAIN CROSSING SEWER UP TO 24" IN DIAMETER (S6.01) Unit price bid shall not be less than: $ 1,040.00	8.00	EACH	$1,144	00	$9,152.	00
202	UTL-6.01.9 GAS MAIN CROSSING WATER MAIN UP TO 20" IN DIAMETER (S6.01) Unit price bid shall not be less than: $ 485.00	1.00	EACH	$550	00	$550.	00

NEW YORK CITY DEPARTMENT OF DESIGN AND CONSTRUCTION
DIVISION OF INFRASTRUCTURE - BUREAU OF DESIGN

PROJECT ID: HWXP136B
CONTRACT PIN: 8502016HW0061C

BID SCHEDULE FORM

COL. 1 SEQ. NO	COL. 2 ITEM NUMBER and DESCRIPTION	COL. 3 ENGINEER'S ESTIMATE OF QUANTITY	COL. 4 UNIT	COL. 5 UNIT PRICE (IN FIGURES) DOLLARS	CTS	COL. 6 EXTENDED AMOUNT (IN FIGURES) DOLLARS	CTS
203	**UTL-6.06** SPECIAL CARE EXCAVATION AND BACKFILLING (S6.06) **Unit price bid shall not be less than: $ 180.00**	20.00	C.Y.	~~$22.00~~ $180.	00	~~440.00~~ 3,600.	00
204	**UTL-6.07** TEST PITS FOR GAS FACILITIES (S6.07) **Unit price bid shall not be less than: $ 100.00**	27.00	C.Y.	$110	00	2,970	00
205	**UTL-GCS-2WS** GAS INTERFERENCES AND ACCOMMODATIONS **PRICE BID SHALL BE FOR THE FIXED SUM OF $ 15,000.00**	1.00	F.S.	15,000	00	$15,000	00

SUB-TOTAL: $ 18,852,130.25

206	**6.39 A** MOBILIZATION **BID PRICE OF MOBILIZATION SHALL NOT EXCEED 4% OF THE ABOVE SUB-TOTAL PRICE.**	1.00	L.S.	$753,000	00	$753,000	00

NEW YORK CITY DEPARTMENT OF DESIGN AND CONSTRUCTION
DIVISION OF INFRASTRUCTURE - BUREAU OF DESIGN

PROJECT ID: HWXP136B
CONTRACT PIN: 8502016HW0061C

BID SCHEDULE FORM

COL 1	COL 2	COL 3	COL 4	COL 5		COL 6	
		ENGINEER'S		UNIT PRICE		EXTENDED AMOUNT	
		ESTIMATE		(IN FIGURES)		(IN FIGURES)	
SEQ. NO	ITEM NUMBER and DESCRIPTION	OF QUANTITY	UNIT	DOLLARS	CTS	DOLLARS	CTS

TOTAL BID PRICE: $ 19,605,130.25

PLEASE BE SURE A LEGIBLE BID IS ENTERED FOR EACH ITEM.
THE BIDDER SHALL INSERT THE TOTAL BID PRICE IN
THE BID FORM ON PAGE C-4 OF THIS BID BOOKLET.

BID FORM
THE CITY OF NEW YORK
DEPARTMENT OF DESIGN AND CONSTRUCTION
DIVISION OF INFRASTRUCTURE

BID FOR FURNISHING ALL LABOR AND MATERIAL NECESSARY AND REQUIRED FOR:

PROJECT ID: HWXP136B

RECONSTRUCTION OF GRAND CONCOURSE SERVICE ROADS, RESURFACING OF THE MAIN ROADWAY AND WIDENING OF MEDIANS FROM EAST 171ST STREET TO EAST 175TH STREET

INCLUDING SEWER, WATER MAIN, STREET LIGHTING, AND TRAFFIC SIGNAL WORK

Together With All Work Incidental Thereto

BOROUGH OF THE BRONX
CITY OF NEW YORK

Name of Bidder: NY Asphalt, Inc.

Date of Bid Opening: 9/30/16

Bidder is: (Check one, whichever applies) Individual ( ) Partnership ( ) Corporation (✓)

Place of Business of Bidder: 366 Industrial Loop SI, NY 10309

Bidder's Telephone Number (718) 966-6466 Fax Number: (718) 966-6544

Bidder's E-Mail Address: _____

Residence of Bidder (If Individual): _____

If Bidder is a Partnership, fill in the following blanks:

Names of Partners	Residence of Partners

If Bidder is a Corporation, fill in the following blanks:
Organized under the laws of the State of New York

Name and Home Address of President: Michael Thompson
7 Bretwood Drive N. Colts Neck, NJ

Name and Home Address of ~~Secretary~~ V.P.: Amanda Glanz
1400 Mountain top Rd. Bridgewater, NJ

Name and Home Address of Treasurer: _____

BID FORM

The above-named Bidder affirms and declares:

1. The said bidder is of lawful age and the only one interested in this bid; and no person, firm or corporation other than hereinbefore named has any interest in this bid, or in the Contract proposed to be taken.

2. By submission of this bid, each bidder and each person signing on behalf of any bidder certifies, and in the case of a joint bid each party thereto certifies as to its own organization, under penalty of perjury, that to the best of its knowledge and belief: (1) the prices in this bid have been arrived at independently without collusion, consultation, communication or agreement, for the purpose of restricting competition, as to any matter relating to such prices with any other bidder or with any competitor; (2) unless otherwise required by law, the prices quoted in this bid have not been knowingly disclosed by the bidder and will not knowingly be disclosed by the bidder prior to opening, directly or indirectly, to any other bidder or to any competitor; and (3) No attempt has been made or will be made by the bidder to induce any other person, partnership or corporation to submit or not to submit a bid for the purpose of restricting competition.

3. No councilman or other officer or employee or person whose salary is payable in whole or in part from the City Treasury is directly or indirectly interested in this bid, or in the supplies, materials, equipment, work or labor to which it relates, or in any of the profits thereof.

4. The bidder is not in arrears to the City of New York upon debt or contract or taxes, and is not a defaulter, as surety or otherwise, upon any obligation of the City of New York, and has not been declared not responsible, or disqualified, by any agency of the City of New York or State of New York, nor is there any proceeding pending relating to the responsibility or qualification of the bidder to receive public contracts except as set forth on the Affirmation included as page C-6 of this Bid Booklet.

The bidder hereby affirms that it has paid all applicable City income, excise and other taxes for all years it has conducted business activities in New York City.

5. The bidder, as an individual, or as a member, partner, director or officer of the bidder, if the same be a firm, partnership or corporation, executes this document expressly warranting and representing that should this bid be accepted by the City and the Contract awarded to him, he and his subcontractors engaged in the performance: (1) will comply with the provisions of Section 6-108 of the Administrative Code of the City of New York and the non-discrimination provisions of Section 220a of the New York State Labor Law, as more expressly and in detail set forth in the Agreement; (2) will comply with Section 6-109 of the Administrative Code of the City of New York in relation to minimum wages and other stipulations as more expressly and in detail set forth in the Agreement; (3) have complied with the provisions of the aforesaid laws since their respective effective dates, and (4) will post notices to be furnished by the City, setting forth the requirements of the aforesaid laws in prominent and conspicuous places in each and every plant, factory, building and structure where employees engaged in the performance of the Contract can readily view it, and will continue to keep such notices posted until the supplies, materials and equipment, or work labor and services required to be furnished or rendered by the Contractor have been finally accepted by the City. In the event of any breach or violation of the foregoing, the Contractor may be subject to damages, liquidated or otherwise, cancellation of the Contract and suspension as a bidder for a period of three years. (The words, "the bidder", "he", "his", and "him" where used herein shall mean the individual bidder, firm, partnership or corporation executing this bid).

6. Compliance Report

The bidder, as an individual, or as a member, partner, director, or officer of the bidder, if the same be a firm, partnership, or corporation, (1) represents that his attention has been specifically drawn to Executive Order No. 50, dated, April 25, 1980, on Equal Employment Compliance of the contract, and (2) warrants that he will comply with the provisions of Executive Order No. 50. The Employment Report must be submitted as part of the bid.

The bidder, as an individual, or as a member, partner, director, or officer of the bidder, if the same be a firm, partnership, or corporation, executes this document expressly warranting that he will comply with: (1) the provision of the contract on providing records, Chapter 8.

7. By submission of this bid, the bidder certifies that it now has and will continue to have the financial capability to fully perform the work required for this contract. Any award of this contract will be made in reliance upon such certification. Upon request therefor, the bidder will submit written verification of such financial capability in a form that is acceptable to the department.

8. In accordance with Section 165 of the State Finance Law, the bidder agrees that tropical hardwoods, as defined in Section 165 of the State Finance Law, shall not be utilized in the performance of this Contract, except as the same are permitted by the foregoing provision of law.

9. The bidder has visited and examined the site of the work and has carefully examined the Contract in the form approved by the Corporation Counsel, and will execute the Contract and perform all its items, covenants and conditions, and will provide, furnish and deliver all the work, materials, supplies, tools and appliances for all labor and materials necessary or required for the hereinafter named work, all in strict conformity with the Contract, for the prices set forth in the Bid Schedule:

10. M/WBE UTILIZATION PLAN: By signing its bid, the bidder agrees to the Vendor Certification and Required Affirmations set forth below, unless a full waiver of the Participation Goals is granted. The Vendor Certification and Required Affirmations will be deemed to satisfy the requirement to complete Section V of Part II of Schedule B: M/WBE Utilization Plan.

Section V: Vendor Certification and Required Affirmations:

I hereby:

1) acknowledge my understanding of the M/WBE participation requirements as set forth in this Contract and the pertinent provisions of Section 6-129 of the Administrative Code of the City of New York and the rules promulgated thereunder;
2) affirm that the information supplied in support of the M/WBE Utilization Plan is true and correct;
3) agree, if awarded this Contract, to comply with the M/WBE participation requirements of this Contract, the pertinent provisions of Section 6-129, and the rules promulgated thereunder, all of which shall be deemed to be material terms of this Contract;
4) agree and affirm that it is a material term of this Contract that the Vendor will award the total dollar value of the M/WBE Participation Goals to certified MBEs and/or WBEs, unless a full waiver is obtained or such goals are modified by the Agency; and
5) agree and affirm, if awarded this Contract, to make all reasonable, good faith efforts to meet the M/WBE Participation Goals, or If a partial waiver is obtained or such goals are modified by the Agency, to meet the modified Participation Goals by soliciting and obtaining the participation of certified MBE and/or WBE firms.

BID FORM

PROJECT ID. HWXP136B

TOTAL BID PRICE: In the space provided below, the Bidder shall indicate its Total Bid Price in figures. Such Total Bid Price is set forth on the final page of the Bid Schedule.

TOTAL BID PRICE:
(a/k/a BID PROPOSAL)

$ 19,605,130.25
BB 9/30/16

BIDDER'S SIGNATURE AND AFFIDAVIT

Bidder: NY Asphalt, Inc.

By: _____
(Signature of Partner or corporate officer)

_____
Secretary of Corporate Bidder

Attest:
(Corporate Seal)

Affidavit on the following page should be subscribed
and sworn to before a Notary Public

BID FORM (TO BE NOTARIZED)

AFFIDAVIT WHERE BIDDER IS AN INDIVIDUAL

STATE OF NEW YORK, COUNTY OF_____ ss:
_____ being duly sworn says:
I am the person described in and who executed the foregoing bid, and the several matters therein stated are in all respects true.

_____
(Signature of the person who signed the Bid)

Subscribed and sworn to before me this
_____ day of_____, _____

_____
Notary Public

AFFIDAVIT WHERE BIDDER IS A PARTNERSHIP

STATE OF NEW YORK, COUNTY OF_____ ss:
_____ being duly sworn says:
I am a member of _____ the firm described in and which executed the foregoing bid. I subscribed the name of the firm thereto on behalf of the firm, and the several matters therein stated are in all respects true.

_____
(Signature of Partner who signed the Bid)

Subscribed and sworn to before me this
_____ day of_____, _____

_____
Notary Public

AFFIDAVIT WHERE BIDDER IS A CORPORATION

STATE OF NEW YORK, COUNTY OF Richmond ss:
Michael Thompson being duly sworn says:
I am the President of the above named corporation whose name is subscribed to and which executed the foregoing bid. I reside at Colts Neck, NJ.
I have knowledge of the several matters therein stated, and they are in all respects true.

_____
(Signature of Corporate Officer who signed the Bid)

Subscribed and sworn to before me this
30th day of Sept, 2016
Michele Renna
Notary Public

MICHELE RENNA
NOTARY PUBLIC STATE OF NEW YORK
No. 01RE6110285
Qualified in Richmond County
My Commission Expires May 24, 2020

AFFIRMATION

PROJECT ID. HWXP136B

The undersigned bidder affirms and declares that said bidder is not in arrears to the City of New York upon debt, contract or taxes and is not a defaulter, as surety or otherwise, upon obligation to the City of New York, and has not been declared not responsible, or disqualified, by any agency of the City of New York, nor is there any proceeding pending relating to the responsibility or qualification of the bidder to receive public contracts except: NONE

(If none, the bidder shall insert the word "None" in the space provided above.)

Full Name of Bidder: NY Asphalt Inc.
Address: 366 Industrial Loop
City Staten Island State NY Zip Code 10309

CHECK ONE BOX AND INCLUDE APPROPRIATE NUMBER:

/ / A - Individual or Sole Proprietorship*
SOCIAL SECURITY NUMBER

/ / B - Partnership, Joint Venture or other unincorporated organization
EMPLOYER IDENTIFICATION NUMBER

/✓/ C- Corporation
EMPLOYER IDENTIFICATION NUMBER
13-4110973

By: _____
Signature

Title: President

If a corporation, place seal here

This affirmation must be signed by an officer or duly authorized representative.

*Under the Federal Privacy Act the furnishing of Social Security Numbers by bidders on City contracts is voluntary. Failure to provide a Social Security Number will not result in a bidder's disqualification. Social Security Numbers will be used to identify bidders, proposers or vendors to ensure their compliance with laws, to assist the City in enforcement of laws, as well as to provide the City a means of identifying of businesses which seek City contracts.

BID BOND 1
FORM OF BID BOND

KNOW ALL MEN BY THESE PRESENTS. That we, NY Asphalt, Inc.
366 Industrial Loop
Staten Island, NY 10309

hereinafter referred to as the "Principal", and
Philadelphia Indemnity Insurance Company
One Bala Plaza, Suite 100
Bala Cynwyd, PA 19004

hereinafter referred to as the "Surety" are held and firmly bound to THE CITY OF NEW YORK, hereinafter referred to as the "CITY", or to its successors and assigns in the penal sum of

Ten Percent (10%) of Amount Bid

($ XXXX), Dollars lawful money of the United States, for the payment of which said sum of money well and truly to be made, we, and each of us, bind ourselves, our heirs, executors, administrators, successors and assigns, jointly and severally, firmly by these presents.

Whereas, the Principal is about to submit (or has submitted) to the City the accompanying proposal, hereby made a part hereof, to enter into a contract in writing for PROJECT ID: HWXP136B

PIN: 8502016HW0061C Reconstruction of Grand Concourse Service Roads, Resurfacing of the Main Roadway and Widening of Medians From East 171st Street to East 175th Street

NOW, THEREFORE, the conditions of this obligation are such that if the Principal shall not withdraw said Proposal without the consent of the City for a period of forty-five (45) days after the opening of bids and in the event of acceptance of the Principal's Proposal by the City, if the Principal shall:

(a) Within ten (10) days after notification by the City, execute in quadruplicate and deliver to the City all the executed counterparts of the Contract in the form set forth in the Contract Documents, in accordance with the proposal as accepted, and

(b) Furnish a performance bond and separate payment bond, as may be required by the City, for the faithful performance and proper fulfillment of such Contract, which bonds shall be satisfactory in all respects to the City and shall be executed by good and sufficient sureties, and

(c) In all respects perform the agreement created by the acceptance of said Proposal as provided in the Information for Bidders, bound herewith and made a part hereof, or if the City shall reject the aforesaid Proposal, then this obligation shall be null and void; otherwise to remain in full force and effect.

BID BOND 2

In the event that the Proposal of the Principal shall be accepted and the Contract be awarded to him the Surety hereunder agrees subject only to the payment by the Principal of the premium therefore, if requested by the City, to write the aforementioned performance and payment bonds in the form set forth in the Contract Documents.

It is expressly understood and agreed that the liability of the Surety for any and all claims hereunder shall in no event exceed the penal amount of this obligation as herein stated.

There shall be no liability under this bond if, in the event of the acceptance of the Principal's Proposal by the City, either a performance bond or payment bond, or both, shall not be required by the City on or before the 30th day after the date on which the City signs the Contract.

The surety, for the value received, hereby stipulates and agrees that the obligations of the Surety and its bond shall in no way be impaired or affected by any postponements of the date upon which the City will receive or open bids, or by any extensions of the time within which the City may accept the Principal's Proposal, or by any waiver by the City of any of the requirements of the Information for Bidders, and the Surety hereby waives notice of any such postponements, extensions, or waivers.

IN WITNESS WHEREOF, the Principal and the Surety have hereunto set their hands and seals and such of them as are corporations have caused their corporate seals to be hereto affixed and these presents to be signed by their proper officers the 30th day of September, 2016.

(Seal)

NY Asphalt, Inc. (L.S.)
Principal

By: _____

(Seal)

Philadelphia Indemnity Insurance Company
Surety

By: _____
Michael Gulnen, Attorney-in-Fact

BID BOND 3

ACKNOWLEDGMENT OF PRINCIPAL, IF A CORPORATION

State of New York County of Richmond ss:
On this 30th day of Sept 2016, before me personally came
Michael Thompson to me known, who, being by me duly sworn, did depose and say
that he resides at Colts Neck NJ
that he is the President of NY Asphalt, Inc.
the corporation described in and which executed the foregoing instrument; that he knows the seal of said corporation; that one of the seals affixed to said instrument is such seal; that it was so affixed by order of the directors of said corporation, and that he signed his name thereto by like order.

Michele Renna
Notary Public

MICHELE RENNA
NOTARY PUBLIC STATE OF NEW YORK
No. 01RE6110285
Qualified in Richmond County
My Commission Expires May 24, 2020

ACKNOWLEDGMENT OF PRINCIPAL, IF A PARTNERSHIP

State of _____ County of _____ ss:
On this _____ day of _____, _____, before me personally appeared
_____ to me known and known to me to be one of the members of the
firm of _____ described in and who executed the foregoing instrument, and he acknowledged to me that he executed the same as and for the act and deed of said firm.

_____
Notary Public

ACKNOWLEDGMENT OF PRINCIPAL, IF AN INDIVIDUAL

State of _____ County of _____ ss:
On this _____ day of _____, _____, before me personally appeared
_____ to me known and known to me to be the person described in and who executed the foregoing instrument and acknowledged that he executed the same.

_____
Notary Public

AFFIX ACKNOWLEDGMENTS AND JUSTIFICATION OF SURETIES

SURETY ACKNOWLEDGEMENT

State of **New Jersey**
SS:
County of **Essex**

On this **30th** day of **September, 2016**, before me personally comes **Michael Culnen** to me known, who, being by me duly sworn, deposes and says that he resides in **Mendham Township, NJ** that he is the Attorney-In-Fact of the **Philadelphia Indemnity Insurance Company** the Corporation described in and which executed the foregoing instrument; that he knows that seal of said corporation; that the seal affixed to the said instrument is such Corporate seal; that it was so affixed by the order of the Board of Directors of the said Corporation, and that he signed his name thereto by like order.

MELISSA FELLER
NOTARY PUBLIC OF NEW JERSEY
ID # 50011994
My Commission Expires 3/13/2020

(Signature and Title of Official Taking Acknowledgement)

PHILADELPHIA INDEMNITY INSURANCE COMPANY
231 St. Asaph's Rd., Suite 100
Bala Cynwyd, PA 19004-0950

Power of Attorney

KNOW ALL PERSONS BY THESE PRESENTS: That **PHILADELPHIA INDEMNITY INSURANCE COMPANY** (the Company), a corporation organized and existing under the laws of the Commonwealth of Pennsylvania, does hereby constitute and appoint **Michael Culnen of USI Insurance Services, LLC**, its true and lawful Attorney-in-fact with full authority to execute on its behalf bonds, undertakings, recognizances and other contracts of indemnity and writings obligatory in the nature thereof, issued in the course of its business and to bind the Company thereby, in an amount not to exceed **$25,000,000.00**.

This Power of Attorney is granted and is signed and sealed by facsimile under and by the authority of the following Resolution adopted by the Board of Directors of PHILADELPHIA INDEMNITY INSURANCE COMPANY at a meeting duly called the 1st day of July, 2011.

RESOLVED: That the Board of Directors hereby authorizes the President or any Vice President of the Company to: (1) Appoint Attorney(s) in Fact and authorize the Attorney(s) in Fact to execute on behalf of the Company bonds and undertakings, contracts of indemnity and other writings obligatory in the nature thereof and to attach the seal of the Company thereto; and (2) to remove, at any time, any such Attorney-in-Fact and revoke the authority given. And, be it

FURTHER RESOLVED: That the signatures of such officers and the seal of the Company may be affixed to any such Power of Attorney or certificate relating thereto by facsimile, and any such Power of Attorney so executed and certified by facsimile signatures and facsimile seal shall be valid and biding upon the Company in the future with the respect to any bond or undertaking to which it is attached.

IN TESTIMONY WHEREOF, PHILADELPHIA INDEMNITY INSURANCE COMPANY HAS CAUSED THIS INSTRUMENT TO BE SIGNED AND ITS CORPORATE SEALTO BE AFFIXED BY ITS AUTHORIZED OFFICE THIS 10TH DAY OF JUNE 2013.

(Seal)

Robert D. O'Leary Jr., President & CEO
Philadelphia Indemnity Insurance Company

On this 10th day of June 2013, before me came the individual who executed the preceding instrument, to me personally known, and being by me duly sworn said that he is the therein described and authorized officer of the **PHILADELPHIA INDEMNITY INSURANCE COMPANY**; that the seal affixed to said instrument is the Corporate seal of said Company; that the said Corporate Seal and his signature were duly affixed.

COMMONWEALTH OF PENNSYLVANIA
Notarial Seal
Kimberly A. Kessleskd, Notary Public
Lower Merion Twp. Montgomery County
My Commission Expires Dec. 18, 2016
MEMBER, PENNSYLVANIA ASSOCIATION OF NOTARIES

(Notary Seal)

Notary Public: _____

residing at: Bala Cynwyd, PA

My commission expires: December 18, 2016

I, Edward Sayago, Corporate Secretary of PHILADELPHIA INDEMNITY INSURANCE COMPANY, do herby certify that the foregoing resolution of the Board of Directors and this Power of Attorney issued pursuant thereto on this 10TH day of June 2013 true and correct and are still in full force and effect. I do further certify that Robert D. O'Leary Jr., who executed the Power of Attorney as President, was on the date of execution of the attached Power of Attorney the duly elected President of PHILADELPHIA INDEMNITY INSURANCE COMPANY,

In Testimony Whereof I have subscribed my name and affixed the facsimile seal of each Company this 30th day of September, 2016.

Edward Sayago, Corporate Secretary
PHILADELPHIA INDEMNITY INSURANCE COMPANY

PHILADELPHIA INDEMNITY INSURANCE COMPANY

Statutory Statements of Admitted Assets, Liabilities and Capital and Surplus
(in thousands, except par value and share amounts)

	As of December 31,	
Admitted Assets	2015	2014
Bonds (fair value $6,007,876 and $6,153,215)	$ 5,821,420	$ 5,869,602
Preferred stocks (fair value $64,498 and $59,525)	62,617	59,413
Common stocks (cost $104,587 and $110,951)	88,259	97,616
Mortgage loans	154,042	21,402
Other invested assets (cost $194,804 and $156,141)	196,159	154,549
Derivatives	185	-
Cash, cash equivalents and short-term investments	32,936	45,054
Cash and invested assets	6,355,618	6,247,636
Premiums receivable, agents' balances and other receivables	734,983	673,590
Reinsurance receivable on paid losses	25,869	27,162
Accrued investment income	67,892	65,074
Receivable from affiliates	393	4,104
Net deferred tax asset	174,553	164,545
Other assets	2,200	106
Total admitted assets	$ 7,361,508	$ 7,182,217
Liabilities and Capital and Surplus		
Liabilities:		
Net unpaid losses and loss adjustment expenses	$ 3,514,230	$ 3,169,910
Net unearned premiums	1,342,996	1,260,065
Reinsurance payable on paid loss and loss adjustment expenses	11,618	3,747
Ceded reinsurance premiums payable	63,634	63,104
Commissions payable, contingent commissions and other similar charges	240,901	226,034
Federal income taxes payable	11,612	13,990
Accrued expenses and other liabilities	36,426	50,281
Payable to affiliates	11,824	9,877
Provision for reinsurance	554	1,000
Payable for purchased securities	80,193	46,833
Total liabilities	5,313,988	4,844,841
Capital:		
Common stock, par value of $10 per share; 1,000,000 shares authorized, 450,000 shares issued and outstanding	4,500	3,600
Surplus:		
Gross paid-in and contributed surplus	386,071	386,970
Unassigned surplus	1,656,949	1,946,806
Total surplus	2,043,020	2,333,776
Total capital and surplus	2,047,520	2,337,376
Total liabilities and capital and surplus	$ 7,361,508	$ 7,182,217

The undersigned, being duly sworn, says: That she is the Executive Vice President and Chief Financial Officer of Philadelphia Indemnity Insurance Company; that said Company is a corporation duly organized in the state of Pennsylvania, and licensed and engaged in the State of Pennsylvania and has duly complied with all the requirements of the laws of the said State applicable of the said Company and is duly qualified to act as Surety under such laws; that said Company has also complied with and is duly qualified to act as Surety under the Act of Congress. And that to the best of her knowledge and belief the above statement is a full, true and correct statement of

Attest:

Karen Gilmer-Pauciello, EVP & CFO

Sworn to before me this 6th day of June 2016.

Kimberly Kessleski, Notary

COMMONWEALTH OF PENNSYLVANIA
Notarial Seal
Kimberly A. Kessleski, Notary Public
Lower Merion Twp., Montgomery County
My Commission Expires Dec. 18, 2016
MEMBER, PENNSYLVANIA ASSOCIATION OF NOTARIES

APPRENTICESHIP PROGRAM QUESTIONNAIRE ("APQ")

Bidder Name: NY Asphalt, Inc.
Project ID Number: HWXP1363

The Bidder MUST complete, sign, and submit this Apprenticeship Program Questionnaire with its bid.

1. Does the bidder have any Apprenticeship Program agreement(s) appropriate for the type and scope of work to be performed? (Note: Participation may be by either direct sponsorship or through collective bargaining agreement(s).)

   X YES _____NO

2. Has/have the bidder's Apprenticeship Program agreement(s) been registered with, and approved by the New York State Commissioner of Labor ("NYSDOL Commissioner")?

   X YES _____NO

3. Has/have the bidder's Apprenticeship Program successfully passed the two-year Probation period following its initial registration with the New York State Department of Labor ("NYSDOL")?

   X YES _____NO

If the answers to Questions 1, 2, and 3 are "Yes". The bidder shall, in the space below (and/or attached herewith where applicable), provide the contact information for such Apprenticeship Program(s) as well as information demonstrating that such Apprenticeship Program(s) have passed the two-year Probation period following its initial registration with the NYSDOL. (The bidder may attach additional pages if necessary).

- **Where the bidder directly sponsors any such apprenticeship Program(s),** the bidder shall provide the following:
  - The trade classification(s) covered by such program(s), and the date(s) such program(s) was/were approved by the NYSDOL Commissioner; and/or
  - A copy of a letter(s) from the NYSDOL, on NYSDOL's letterhead, executed by an official thereof, which verifies/verify the trade classification(s) covered by such program(s), and the date(s) such program(s) was/were approved by the NYSDOL Commissioner and the Active status of such program(s).

- **Where the bidder participates in any such Apprenticeship Program(s) through its membership in an employer organization(s) that directly sponsors such program(s) or where the employer association(s) participates in such program(s) through collective bargaining,** the bidder shall provide the following:
  - The contact information for the employer organization(s), and the apprenticeable trade(s) covered pursuant to the bidder's affiliation therewith, and the date such program(s) was/were approved by the NYSDOL Commissioner; or
  - A letter(s) from such employer organization(s), on letterhead of such organization(s), executed by an officer, delegate or official thereof, which verifies/verify the trade classification(s) covered by such program(s) was/were approved by the NYSDOL Commissioner, and that the bidder is both a member in good standing of the identified employer organization and is subject to the provisions of the Apprenticeship Program agreement(s) sponsored thereby.

APPRENTICESHIP PROGRAM QUESTIONNAIRE ("APQ")

Project ID Number: HWXP 136B

- **Where the bidder participates in any such Apprenticeship Programs through collective bargaining agreements,** the bidder shall provide the following:
    - The contact information for such collective bargaining entity(ies) and the apprenticeable trade(s) covered pursuant to the bidder's affiliation therewith;
    - A letter(s) from such collective bargaining entity(ies), on letterhead of such entity(ies), executed by an officer, delegate or official thereof, which verifies/verify the bidder's status as a signatory/participant in good standing to such collective bargaining entity(ies) Apprenticeship Program Agreements.

Contact Unions for more information

Locals 14, 15, 472, 825, 1010, 731, 46

Bidder: NY Asphalt, Inc.

By: _____ Title: President
(Signature of Partner or Corporate Officer)

Date: 9/30/16

Project ID. HWXP136B

SAFETY QUESTIONNAIRE

The bidder must include, with its bid, all information requested on this Safety Questionnaire. Failure to provide a completed and signed Safety Questionnaire at the time of bid opening may result in disqualification of the bid as non-responsive.

1. Bidder Information:

Company Name: NY Asphalt, Inc.

DDC Project Number: HWXP136B

Company Size: _____ Ten (10) employees or less

X Greater than ten (10) employees

Company has previously worked for DDC X YES _____ NO

2. Type(s) of Construction Work

TYPE OF WORK	LAST 3 YEARS	THIS PROJECT
General Building Construction		
Residential Building Construction		
Nonresidential Building Construction		✓
Heavy Construction, except building	✓	✓
Highway and Street Construction	✓	✓
Heavy Construction, except highways	✓	✓
Plumbing, Heating, HVAC		
Painting and Paper Hanging		
Electrical Work		
Masonry, Stonework and Plastering		
Carpentry and Floor Work		
Roofing, Siding, and Sheet Metal		✓
Concrete Work	✓	
Specialty Trade Contracting		
Asbestos Abatement		
Other (specify)		
_____		

3. Experience Modification Rate:

The Experience Modification Rate (EMR) is a rating generated by the National Council of Compensation Insurance (NCCI). This rating is used to determine the contractor's premium for worker's compensation insurance. The contractor may obtain its EMR by contacting its insurance broker or the NCCI. If the contractor cannot obtain its EMR, it must submit a written explanation as to why.

USI UNDERSTAND. SERVICE. INNOVATE.

June 16, 2016

NY Asphalt, Inc.
366 Industrial Loop
Staten Island, NY 10309

RE: Experience Rating Modification

Dear Joe,

As per your request, below are your Experience Ratings for New Jersey & New York Worker's Compensation:

03/10/2016 – 03/10/2017 (NJ)	.815
03/08/2016 – 03/08/2017 (NY)	.780

Please do not hesitate to contact me with any questions.

Sincerely,

Corynne Albertson
Account Manager
Direct: (973)965-3165
Email: Corynne.Albertson@usi.com

Copyright © 2009 USI Insurance Services LLC

Project ID. HWXP136B

The Contractor must indicate its Intrastate and Interstate EMR for the past three years. [Note: For contractors with less than three years of experience, the EMR will be considered to be 1.00].

YEAR	INTRASTATE RATE	INTERSTATE RATE
2015	.85	.814
2014	.88	.889
2013	.88	N/A

If the Intrastate and/or Interstate EMR for any of the past three years is greater than 1.00, the contractor must attach, to this questionnaire, a written explanation for the rating and identify what corrective action was taken to correct the situation resulting in that rating.

4. OSHA Information:

___ YES ___ NO Contractor has received a willful violation issued by OSHA or New York City Department of Buildings (NYCDOB) within the last three years.

___ YES ___ NO Contractor has had an incident requiring OSHA notification within 8 hours (all work-related fatalities) or an incident requiring OSHA notification within 24 hours (all work-related in-patient hospitalizations, all amputations and all losses of an eye).

The Occupational Safety and Health Act (OSHA) of 1970 requires employers with ten or more employees, on a yearly basis to complete and maintain on file the form entitled "Log of Work-related Injuries and Illnesses". This form is commonly referred to as the OSHA 300 Log (OSHA 200 Log for 2001 and earlier).

The OSHA 300 Log must be submitted for the last three years for contractors with more than ten employees.

The Contractor must indicate the total number of hours worked by its employees, as reflected in payroll records for the past three years.

The contractor must submit the Incident Rate for Lost Time Injuries (the Incident Rate) for the past three years. The Incident Rate is calculated in accordance with the formula set forth below. For each given year, the total number of incidents is the total number of non-fatal injuries and illnesses reported on the OSHA 300 Log. The 200,000 hours represents the equivalent of 100 employees working forty hours a week, fifty weeks per year.

$$\text{Incident Rate} = \frac{\text{Total Number of Incidents X 200,000}}{\text{Total Number of Hours Worked by Employees}}$$

YEAR	TOTAL NUMBERS OF HOURS WORKED BY EMPLOYEES	INCIDENT RATE
2015	45,205	4.42
2014	41,641	4.80
2013	39,000	5.12

Project ID. HWXP136B

If the contractor's Incident Rate for any of the past three years is one point higher than the Incident Rate for the type of construction it performs (listed below), the contractor must attach, to this questionnaire, a written explanation for the relatively high rate.

General Building Construction	8.5
Residential Building Construction	7.0
Nonresidential Building Construction	10.2
Heavy Construction, except building	8.7
Highway and Street Construction	9.7
Heavy Construction, except highways	8.3
Plumbing, Heating, HVAC	11.3
Painting and Paper Hanging	6.9
Electrical Work	9.5
Masonry, Stonework and Plastering	10.5
Carpentry and Floor Work	12.2
Roofing, Siding, and Sheet Metal	10.3
Concrete Work	8.6
Specialty Trade Contracting	8.6

5. Safety Performance on Previous DDC Project(s)

X YES ___ NO Contractor previously audited by the DDC Office of Site Safety.

DDC Project Number(s): SAND24 , _____ , _____

X YES ___ NO Accident on previous DDC Project(s).

DDC Project Number(s): PW1A-1 , _____ , _____

___ YES X NO Fatality or Life-altering Injury on DDC Project(s) within the last three years. [Examples of a life-altering injury include loss of limb, loss of a sense (e.g., sight, hearing), or loss of neurological function].

DDC Project Number(s): _____ , _____ , _____

Date: 9/30/16 By: _____

(Signature of Owner, Partner, Corporate Officer)

Title: president

Certificate of No Change Form

NYC Mayor's Office of Contract Services

- Please submit two completed forms. Copies will not be accepted.
- Please send both copies to the agency that requested it, unless you are advised to send it directly to the Mayor's Office of Contract Services (MOCS).
- A materially false statement willfully or fraudulently made in connection with this certification, and/or the failure to conduct appropriate due diligence in verifying the information that is the subject of this certification, may result in rendering the submitting entity non-responsible for the purpose of contract award.
- A materially false statement willfully or fraudulently made in connection with this certification may subject the person making the false statement to criminal charges

I, Michael Thompson, being duly sworn, state that I have read
Enter Your Name

and understand all the items contained in the vendor questionnaire and any submission of change as identified on page one of this form and certify that as of this date, these items have not changed. I further certify that, to the best of my knowledge, information and belief, those answers are full, complete, and accurate; and that, to the best of my knowledge, information, and belief, those answers continue to be full, complete, and accurate.

In addition, I further certify on behalf of the submitting vendor that the information contained in the principal questionnaire(s) and any submission of change identified on page two of this form have not changed and have been verified and continue, to the best of my knowledge, to be full, complete and accurate.

I understand that the City of New York will rely on the information supplied in this certification as additional inducement to enter into a contract with the submitting entity.

Vendor Questionnaire *This section is required.*

This refers to the vendor questionnaire(s) submitted for the vendor doing business with the City.

Name of Submitting Entity: NY Asphalt Inc.

Vendor's Address: 366 Industrial Loop SI, NY 10309

Vendor's EIN or TIN: 13-4110973 Requesting Agency: NYC DDC

Are you submitting this Certification as a parent? (Please circle one) Yes (No)

Signature date on the last full vendor questionnaire signed for the submitting vendor: 7/23/15

Signature date on change submission for the submitting vendor: 9/9/17

Principal Questionnaire

This section refers to the most recent principal questionnaire submissions.

NYC Mayor's Office of Contract Services

	Principal Name	Date of signature on last full Principal Questionnaire	Date(s) of signature on submission of change
1	Michael Thompson - Pres.	7/23/15	9/2/16
2	Amanda Glanz - V.P.	7/23/15	9/2/16
3			
4			
5			
6			

☐ Check if additional changes were submitted and attach a document with the date of additional submissions.

Certification *This section is required.*

This form must be signed and notarized. Please complete this twice. Copies will not be accepted.

Certified By:

Michael Thompson
Name (Print)

President
Title

NY Asphalt, Inc
Name of Submitting Entity

Signature — 9/30/16 *Date*

Notarized By:

Michele Renna — Notary Public
Richmond — County License Issued
01RE6110285 — License Number

Sworn to before me on: 9/30/16
Date

MICHELE RENNA
NOTARY PUBLIC STATE OF NEW YORK
No. 01RE6110285
Qualified In Richmond County
My Commission Expires May 24, 2020

Mayor's Office of Contract Services
253 Broadway, 9th Floor New York, NY 10007
Phone: 212 788 0018 Fax: 212 788 0049

Certificate of No Change Form

Mayor's Office of Contract Services

- Please submit two completed forms. Copies will not be accepted.
- Please send both copies to the agency that requested it, unless you are advised to send it directly to the Mayor's Office of Contract Services (MOCS).
- A materially false statement willfully or fraudulently made in connection with this certification, and/or the failure to conduct appropriate due diligence in verifying the information that is the subject of this certification, may result in rendering the submitting entity non-responsible for the purpose of contract award.
- A materially false statement willfully or fraudulently made in connection with this certification may subject the person making the false statement to criminal charges

I, Michael Thompson, being duly sworn, state that I have read
Enter Your Name

and understand all the items contained in the vendor questionnaire and any submission of change as identified on page one of this form and certify that as of this date, these items have not changed. I further certify that, to the best of my knowledge, information and belief, those answers are full, complete, and accurate; and that, to the best of my knowledge, information, and belief, those answers continue to be full, complete, and accurate.

In addition, I further certify on behalf of the submitting vendor that the information contained in the principal questionnaire(s) and any submission of change identified on page two of this form have not changed and have been verified and continue, to the best of my knowledge, to be full, complete and accurate.

I understand that the City of New York will rely on the information supplied in this certification as additional inducement to enter into a contract with the submitting entity.

Vendor Questionnaire *This section is required.*

This refers to the vendor questionnaire(s) submitted for the vendor doing business with the City.

Name of Submitting Entity: NY Asphalt, Inc.

Vendor's Address: 366 Industrial Coop SI, NY 10309

Vendor's EIN or TIN: 13-4110973 Requesting Agency: NYC DDC.

Are you submitting this Certification as a parent? (Please circle one) Yes (No)

Signature date on the last full vendor questionnaire signed for the submitting vendor: 7/22/13

Signature date on change submission for the submitting vendor: 9/8/13

Principal Questionnaire

This section refers to the most recent principal questionnaire submissions.

NYC Mayor's Office of Contract Services

	Principal Name	Date of signature on last full Principal Questionnaire	Date(s) of signature on submission of change
1	Michael Thompson - Pres	7/23/15	5/8/13
2	Amanda Ulanz - VP	7/23/15	5/8/13
3			
4			
5			
6			

☐ Check if additional changes were submitted and attach a document with the date of additional submissions.

Certification *This section is required.*

This form must be signed and notarized. Please complete this twice. Copies will not be accepted.

Certified By:

Michael Thompson
Name (Print)

President
Title

NY Asphalt, Inc.
Name of Submitting Entity

Signature — 9/30/16 *Date*

Notarized By:

Michele Renna — Richmond — 01RE6110285

Notary Public — *County License Issued* — *License Number*

Sworn to before me on: 9/30/16
Date

MICHELE RENNA
NOTARY PUBLIC STATE OF NEW YORK
No. 01RE6110285
Qualified in Richmond County
My Commission Expires May 24, 2020

Mayor's Office of Contract Services
253 Broadway, 9th Floor New York, NY 10007
Phone: 212 788 0018 Fax: 212 788 0049

BIDDER'S CERTIFICATION OF COMPLIANCE WITH IRAN DIVESTMENT ACT

Pursuant to General Municipal Law §103-g, which generally prohibits the City from entering into contracts with persons engaged in investment activities in the energy sector of Iran, the bidder/proposer submits the following certification:

[*Please Check One*]

BIDDER'S CERTIFICATION

☒ By submission of this bid or proposal, each bidder/proposer and each person signing on behalf of any bidder/proposer certifies, and in the case of a joint bid each party thereto certifies as to its own organization, under penalty of perjury, that to the best of its knowledge and belief, that each bidder/proposer is not on the list created pursuant to paragraph (b) of subdivision 3 of Section 165-a of the State Finance Law.

☐ I am unable to certify that my name and the name of the bidder/proposer does not appear on the list created pursuant to paragraph (b) of subdivision 3 of Section 165-a of the State Finance Law. I have attached a signed statement setting forth in detail why I cannot so certify.

SIGNATURE

Michael Thompson
PRINTED NAME

President
TITLE

Sworn to before me this
30th day of Sept. 2016

Michele Renna
Notary Public

Dated: 9/30/16

MICHELE RENNA
NOTARY PUBLIC STATE OF NEW YORK
No. 01RE6110285
Qualified in Richmond County
My Commission Expires May 24, 2020

The City of New York Department of Small Business Services
Division of Labor Services Contract Compliance Unit
110 William Street, New York, New York 10038
Phone: (212) 513 - 6323
Fax: (212) 618-8879

CONSTRUCTION EMPLOYMENT REPORT

GENERAL INFORMATION

1. Your contractual relationship in this contract is: Prime contractor x Subcontractor ____

1a. Are M/WBE goals attached to this project? Yes ____ No X

2. Please check one of the following if your firm would like information on how to certify with the City of New York as a:

___Minority Owned Business Enterprise
___Women Owned Business Enterprise
___Disadvantaged Business Enterprise
___Locally Based Business Enterprise
___Emerging Business Enterprise

2a. If you are certified as an **MBE, WBE, LBE, EBE** or **DBE**, what city/state agency are you certified with? NONE Are you DBE certified? Yes ____ No X

3. Please indicate if you would like assistance from SBS in identifying certified M/WBEs for contracting opportunities: Yes___ No X

4. Is this project subject to a project labor agreement? Yes X No ____

5. Are you a Union contractor? Yes X No ____ If yes, please list which local(s) you affiliated with Local 14, 15, 472, 731, 825, 46, 1010

6. Are you a Veteran owned company? Yes ____ No X

PART I: CONTRACTOR/SUBCONTRACTOR INFORMATION

7. 13-4110973 JGiannetti@nyasphalt.com
Employer Identification Number or Federal Tax I.D. Email Address

8. NY Asphalt, Inc.
Company Name

9. 366 Industrial Loop SI, NY 10309
Company Address and Zip Code

10. Michael Thompson (718) 966-6466
Chief Operating Officer Telephone Number

11. Joseph Giannetti (718) 966-6544
Designated Equal Opportunity Compliance Officer (If same as Item #10, write "same") Telephone Number

12. SAME
Name of Prime Contractor and Contact Person
(If same as Item #8, write "same")

13. Number of employees in your company: 53

14. Contract information:

(a) NYCDDC
Contracting Agency (City Agency)

(b) _____
Contract Amount

(c) _____
Procurement Identification Number (PIN)

(d) _____
Contract Registration Number (CT#)

(e) _____
Projected Commencement Date

(f) _____
Projected Completion Date

(g) Description and location of proposed contract:

Grand concourse reconstruction

15. Has your firm been reviewed by the Division of Labor Services (DLS) within the past 36 months and issued a Certificate of Approval? Yes X No___

If yes, attach a copy of certificate.

16. Has DLS within the past month reviewed an Employment Report submission for your company and issued a Conditional Certificate of Approval? Yes X No___

If yes, attach a copy of certificate.

NOTE: DLS WILL NOT ISSUE A CONTINUED CERTIFICATE OF APPROVAL IN CONNECTION WITH THIS CONTRACT UNLESS THE REQUIRED CORRECTIVE ACTIONS IN PRIOR CONDITIONAL CERTIFICATES OF APPROVAL HAVE BEEN TAKEN.

17. Has an Employment Report already been submitted for a different contract (not covered by this Employment Report) for which you have not yet received compliance certificate?
Yes___ No X If yes,

Date submitted: _____
Agency to which submitted: _____
Name of Agency Person: _____
Contract No: _____
Telephone: _____

18. Has your company in the past 36 months been audited by the United States Department of Labor, Office of Federal Contract Compliance Programs (OFCCP)? Yes___ No___

If yes,

NY ASPHALT INCORPORATED
366 Industrial Loop
Staten Island, NY 10309
718-966-6466
718-966-6544

Standard EEO POLICY

Revised 8/24/2015

NY Asphalt Inc. provides equal employment opportunities (EEO) to all employees and applicants the treatment of all employees and applicants for employment without unlawful discrimination as to regard to race, creed, color, religion, sex, national origin, age, disability or genetics, marital status, and citizenship status in all employment decisions. In addition to federal law requirements, NY Asphalt Inc. complies with applicable state and local laws governing nondiscrimination in employment in every location in which the company has facilities. This policy applies to all terms and conditions of employment, including recruiting, hiring, placement, promotion, termination, layoff, recall, transfer, leaves of absence, compensation and training.

NY Asphalt Inc. expressly prohibits any form of workplace harassment based on race, color, religion, gender, sexual orientation, gender identity or expression, national origin, age, genetic information, disability, or veteran status. Improper interference with the ability of NY Asphalt's employees to perform their job duties may result in discipline up to and including discharge.

Respectfully,

Joseph Giannetti, G.M

Small Business Services

careers
businesses
neighborhoods

Kerri Jew
Deputy Commissioner

#215CY323

September 28, 2015

Mr. Das Debaprasad
NY Asphalt, Inc.
366 Industrial Loop
Staten Island, NY 10309

RE: **NYC Department of Design & Construction Contract (DDC)**; Contract No. #HWR00504; PIN No. #8502015HW0039C; Reconstruction of Victory Boulevard from Seneca Avenue to Grand Avenue, etc.; Borough of Staten Island; Contract Value: $4,196,153.00; **Continued Certificate of Approval.**

Dear Mr. Debaprasad:

Please be advised that NY Asphalt, Inc. has already received notice of its approval status for the three (3) year period indicated in the Department of Small Business Services/Division of Labor Services' (DLS') Certificate of Approval dated September 18, 2015 for File # 215CY267.

As your organization continues to meet the equal employment opportunity requirements of the City of New York, DLS approves the awarding of the above-referenced contract. This approval does not extend the initial 3 year approval (August 14, 2015– August 13, 2018) referred to above.

If you have any questions, please call Mr. Jacques St. Cloud at (212) 513-9233 or by email JSt.Cloud@sbs.nyc.gov.

Very truly yours,

Helen Wilson

Helen Wilson
Assistant Commissioner
Division of Labor Services

cc: Giovanni Matos (DDC)
Jacques St.Cloud
File

careers
businesses
neighborhoods

Small Business Services

Gregg Bishop
Commissioner

August 15, 2016

RECEIVED
AUG 2 2 20

Mr. Joseph Giannetti
General Manager
NY Asphalt Inc.
366 Industrial Loop
Staten Island, NY 10309

RE: **New York City Police Department Contract**; (1) DLS. File No. 216CY349; PIN No. 0561600001079; Multi year repair/replacement of asphalt concrete paving on an on call basis at various NYPD facilities in the five boroughs; Contract Value: $2,428,125.00; and

(2) **New York City Department of Design and Construction Contract**; DLS File No. 216CY364; PIN No. 8502016SE0013C; FMS ID: SEQ200550; EPIN No. 85016B0140; Construction of sanitary and storm sewers and appurtenances in Beach 99th Street; Borough of Queens; Contract Value: $1,961,425.80; **Continued Certificate of Approval.**

Dear Mr. Giannetti:

Please be advised that NY Asphalt Inc. has already received notice of its approval for the three **(3)** year period indicated in the Department of Small Business Services/Division of Labor Services (DLS) Certificate of Approval dated September 18, 2015, for DLS File No. 215CY267.

As your organization continues to meet the equal employment opportunity requirements of the City of New York, DLS approves the awarding of the above-referenced contracts. This approval does not extend the initial three **(3)** year approval (**August 14, 2015 – August 13, 2018**) referred to above.

(a) Name and address of OFCCP office.

_____

_____

(b) Was a Certificate of Equal Employment Compliance issued within the past 36 months? Yes___ No~~X~~

If yes, attach a copy of such certificate.

(c) Were any corrective actions required or agreed to? Yes___ No~~X~~

If yes, attach a copy of such requirements or agreements.

(d) Were any deficiencies found? Yes___ No~~X~~

If yes, attach a copy of such findings.

19. Is your company or its affiliates a member or members of an employers' trade association which is responsible for negotiating collective bargaining agreements (CBA) which affect construction site hiring? Yes~~X~~ No___

If yes, attach a list of such associations and all applicable CBA's.

14, 15, 46, 10, 0.731, 1586, 825, 472

PART II: DOCUMENTS REQUIRED

20. For the following policies or practices, attach the relevant documents (e.g., printed booklets, brochures, manuals, memoranda, etc.). If the policy(ies) are unwritten, attach a full explanation of the practices. See instructions.

___ (a) Health benefit coverage/description(s) for all management, nonunion and union employees (whether company or union administered)

___ (b) Disability, life, other insurance coverage/description

___ (c) Employee Policy/Handbook

___ (d) Personnel Policy/Manual

___ (e) Supervisor's Policy/Manual

___ (f) Pension plan or 401k coverage/description for all management, nonunion and union employees, whether company or union administered

___ (g) Collective bargaining agreement(s).

___ (h) Employment Application(s)

___ (i) Employee evaluation policy/form(s).

___ (j) Does your firm have medical and/or non-medical (i.e. education, military, personal, pregnancy, child care) leave policy?

21. To comply with the Immigration Reform and Control Act of 1986 when and of whom does your firm require the completion of an I-9 Form?

(a) Prior to job offer	Yes___	No ٢
(b) After a conditional job offer	Yes___	No ٢
(c) After a job offer	Yes ٢	No___
(d) Within the first three days on the job	Yes___	No ٢
(e) To some applicants	Yes___	No ٢
(f) To all applicants	Yes___	No ٢
(g) To some employees	Yes___	No ٢
(h) To all employees	Yes ٢	No___

22. Explain where and how completed I-9 Forms, with their supportive documentation, are maintained and made accessible.
Employee Files & Payroll

23. Does your firm or any of its collective bargaining agreements require job applicants to take a medical examination? Yes ٢ No___

If yes, is the medical examination given:

(a) Prior to a job offer	Yes___	No ٢
(b) After a conditional job offer	Yes___	No ٢
(c) After a job offer	Yes ٢	No___
(d) To all applicants	Yes___	No ٢
(e) Only to some applicants	Yes ٢	No___

If yes, list for which applicants below and attach copies of all medical examination or questionnaire forms and instructions utilized for these examinations.
Union Mandatory records

24. Do you have a written equal employment opportunity (EEO) policy? Yes ٢ No___

If yes, list the document(s) and page number(s) where these written policies are located.

25. Does the company have a current affirmative action plan(s) (AAP)
_____Minorities and Women
_____Individuals with handicaps
٢ Other. Please specify Union agreement

26. Does your firm or collective bargaining agreement(s) have an internal grievance procedure with respect to EEO complaints? Yes ٢ No___

If yes, please attach a copy of this policy.

If no, attach a report detailing your firm's unwritten procedure for handling EEO complaints.

27. Has any employee, within the past three years, filed a complaint pursuant to an internal grievance procedure or with any official of your firm with respect to equal employment opportunity? Yes___ No___

If yes, attach an internal complaint log. See instructions.

28. Has your firm, within the past three years, been named as a defendant (or respondent) in any administrative or judicial action where the complainant (plaintiff) alleged violation of any anti-discrimination or affirmative action laws? Yes___ No___

If yes, attach a log. See instructions.

29. Are there any jobs for which there are physical qualifications? Yes___ No___

If yes, list the job(s), submit a job description and state the reason(s) for the qualification(s).
Labors endure stamps work

30. Are there any jobs for which there are age, race, color, national origin, sex, creed, disability, marital status, sexual orientation, or citizenship qualifications? Yes___ No___

If yes, list the job(s), submit a job description and state the reason(s) for the qualification(s).

SIGNATURE PAGE

I, (print name of authorized official signing) Michael Thompson hereby certify that the information submitted herewith is true and complete to the best of my knowledge and belief and submitted with the understanding that compliance with New York City's equal employment requirements, as contained in Chapter 56 of the City Charter, Executive Order No. 50 (1980), as amended, and the implementing Rules and Regulations, is a contractual obligation. I also agree on behalf of the company to submit a certified copy of payroll records to the Division of Labor Services on a monthly basis.

NY Asphalt, Inc.
Contractor's Name

Michael Thompson — President
Name of person who prepared this Employment Report — Title

SAME
Name of official authorized to sign on behalf of the contractor — Title

(718)966-6466
Telephone Number

Signature of authorized official — 9/30/16 Date

If contractors are found to be underutilizing minorities and females in any given trade based on Chapter 56 Section 3H, the Division of Labor Services reserves the right to request the contractor's workforce data and to implement an employment program.

Contractors who fail to comply with the above mentioned requirements or are found to be in noncompliance may be subject to the withholding of final payment.

Willful or fraudulent falsifications of any data or information submitted herewith may result in the termination of the contract between the City and the bidder or contractor and in disapproval of future contracts for a period of up to five years. Further, such falsification may result in civil and/and or criminal prosecution.

To the extent permitted by law and consistent with the proper discharge of DLS' responsibilities under Charter Chapter 56 of the City Charter and Executive Order No. 50 (1980) and the implementing Rules and Regulations, all information provided by a contractor to DLS shall be confidential.

Only original signatures accepted.

Sworn to before me this 30th day of Sept 2016

Michele Renna — Authorized Signature — 9/30/16 Date
Notary Public

MICHELE RENNA
NOTARY PUBLIC STATE OF NEW YORK
No. 01RE6110285
Qualified in Richmond County
My Commission Expires May 24, 2020

FOR OFFICIAL USE ONLY: File No. ____

FORM A. CONTRACT BID INFORMATION: USE OF SUBCONTRACTORS/TRADES

1. Do you plan to subcontractor work on this contract? Yes___ No___

2. If yes, complete the chart below.

NOTE: All proposed subcontractors with a subcontract in excess of $750,000 must complete an Employment Report for review and approval before the contract may be awarded and work commences.

SUBCONTRACTOR'S NAME*	OWNERSHIP (ENTER APPROPRIATE CODE LETTERS BELOW)	WORK TO BE PERFORMED BY SUBCONTRACTOR	TRADE PROJECTED FOR USE BY SUBCONTRACTOR	PROJECTED DOLLAR VALUE OF SUBCONTRACT

***If subcontractor is presently unknown, please enter the trade (craft name).**

OWNERSHIP CODES
- W: White
- B: Black
- H: Hispanic
- A: Asian
- N: Native American
- F: Female

FORM B: PROJECTED WORKFORCE

TRADE CLASSIFICATION CODES

(J) Journeylevel Workers
(A) Apprentice
(H) Helper
(TRN) Trainee
(TOT) Total by Column

For each trade to be engaged by your company for this project, enter the projected workforce for Males and Females by trade classification on the charts below.

Trade: _____

Union Affiliation, if applicable _____

Total (Col. #1-10): _____

Total Minority, Male & Female (Col. #2,3,4,5,7,8,9, & 10): _____

Total Female (Col. #6 – 10): _____

	MALES					FEMALES				
	(1) White Non Hisp.	(2) Black Non Hisp.	(3) Hisp.	(4) Asian	(5) Native Amer.	(6) White Non Hisp.	(7) Black Non Hisp.	(8) Hisp.	(9) Asian	(10) Native Amer.
J										
H										
A										
TRN										
TOT										

What are the recruitment sources for you projected hires (i.e., unions, government employment office, job tap center, community outreach)?

_____

_____

FOR OFFICIAL USE ONLY: File No._____

FORM B: PROJECTED WORKFORCE

Trade:

_____

Union Affiliation, if applicable

_____

Total (Col. #1-10):

_____

Total Minority, Male & Female (Col. #2,3,4,5,7,8,9, & 10):

_____

Total Female (Col. #6 – 10):

_____

	MALES					FEMALES				
	(1) White Non Hisp.	(2) Black Non Hisp.	(3) Hisp.	(4) Asian	(5) Native Amer.	(6) White Non Hisp.	(7) Black Non Hisp.	(8) Hisp.	(9) Asian	(10) Native Amer.
J										
H										
A										
TRN										
TOT										

What are the recruitment sources for you projected hires (i.e., unions, government employment office, job tap center, community outreach)?

_____

_____

FORM C: CURRENT WORKFORCE

TRADE CLASSIFICATION CODES

(J) Journeylevel Workers
(A) Apprentice
(H) Helper
(TRN) Trainee
(TOT) Total by Column

For each trade currently engaged by your company for all work performed in New York City, enter the current workforce for Males and Females by trade classification on the charts below.

Trade: _____

Union Affiliation, if applicable _____

Total (Col. #1-10): _____

Total Minority, Male & Female (Col. #2,3,4,5,7,8,9, & 10): _____

Total Female (Col. #6 – 10): _____

	MALES					FEMALES				
	(1) White Non Hisp.	(2) Black Non Hisp.	(3) Hisp.	(4) Asian	(5) Native Amer.	(6) White Non Hisp.	(7) Black Non Hisp.	(8) Hisp.	(9) Asian	(10) Native Amer.
J										
H										
A										
TRN										
TOT										

What are the recruitment sources for you projected hires (i.e., unions, government employment office, job tap center, community outreach)?

_____

_____

FOR OFFICIAL USE ONLY: File No._____

FORM C: CURRENT WORKFORCE

Trade:

_____

Union Affiliation, if applicable

_____

Total (Col. #1-10):

_____

Total Minority, Male & Female (Col. #2,3,4,5,7,8,9, & 10):

_____

Total Female (Col. #6 – 10):

_____

	MALES					FEMALES				
	(1) White Non Hisp.	(2) Black Non Hisp.	(3) Hisp.	(4) Asian	(5) Native Amer.	(6) White Non Hisp.	(7) Black Non Hisp.	(8) Hisp.	(9) Asian	(10) Native Amer.
J										
H										
A										
TRN										
TOT										

What are the recruitment sources for you projected hires (i.e., unions, government employment office, job tap center, community outreach)?

_____

_____

Qualification Form

List previous projects completed to meet the special experience requirements for this contract. Please photocopy this form for submission of all required projects.

Name of Contractor: _____

Name of Project: _____

Location of Project: _____

Owner or Owner's representative (Architect or Engineer) who is familiar with the work performed:

Name: _____
Title: _____ Phone Number: _____

Brief description of the Project completed or the Project in progress:_____
_____
_____

Was the Project performed as a prime, a subcontractor or a sub-subcontractor:_____

Amount of Contract, Subcontract or Sub-subcontract: _____

Start Date and Completion Date: _____

****

Name of Contractor: _____

Name of Project: _____

Location of Project: _____

Owner or Owner's representative (Architect or Engineer) who is familiar with the work performed:

Name: _____
Title: _____ Phone Number: _____

Brief description of the Project completed or the Project in progress:_____
_____
_____

Was the Project performed as a prime, a subcontractor or a sub-subcontractor:_____

Amount of Contract, Subcontract or Sub-subcontract: _____

Start Date and Completion Date: _____

(NO TEXT ON THIS PAGE)

ATTACHMENT 1 - BID INFORMATION

PROJECT ID: HWXP136B
PIN: 8502016HW0061C

Description and Location of Work:

RECONSTRUCTION OF GRAND CONCOURSE SERVICE ROADS,
RESURFACING OF THE MAIN ROADWAY AND WIDENING OF MEDIANS
FROM EAST 171ST STREET TO EAST 175TH STREET

INCLUDING SEWER, WATER MAIN, STREET LIGHTING, AND
TRAFFIC SIGNAL WORK

Together With All Work Incidental Thereto

BOROUGH OF THE BRONX
CITY OF NEW YORK

Documents Available At: 30-30 Thomson Avenue
First Floor Bid Procurement Room
Long Island City, New York 11101
8:30 A.M. to 4:00 P.M. – Monday through Friday

Submission of Bids To: 30-30 Thomson Avenue
First Floor Bid Procurement Room
Long Island City, New York 11101
Before 11:00 A.M. on **SEPTEMBER 30, 2016**

Bid Opening: 30-30 Thomson Avenue
First Floor Bid Procurement Room
Long Island City, New York 11101
Time and Date: 11:00 A.M. on **SEPTEMBER 30, 2016**

Pre-Bid Conference:

Yes	_____	No	X
If Yes, Mandatory	_____	Optional:	_____
Time and Date:	_____		
Location:	_____		

Bid Security: Bid Security is required in the amount set forth below; provided, however, bid security is not required if the TOTAL BID PRICE set forth on the Bid Form is less than $ 1,000,000.00.

(1) Bond in an amount not less than 10% of the TOTAL BID PRICE set forth on the Bid Form, OR

(2) Certified Check in an amount not less than 5% of the TOTAL BID PRICE set forth on the Bid Form.

Performance and Payment Security: Required for contracts in the amount of $1,000,000 or more. Performance Security and Payment Security shall each be in an amount equal to 100% of the Contract Price.

Agency Contact Person: Lorraine Holley
Phone: 718-391-2601 FAX: 718-391-2615

(NO TEXT ON THIS PAGE)

LIST OF CONTRACT DRAWINGS

SHEET NO.	DWG NO.	DRAWING TITLE
1	T	TITLE SHEET
2	L	LEGEND AND ABBREVIATIONS
3	TOC	TABLE OF CONTENTS
4-6	GN1-GNTA	GENERAL NOTES AND TRANSIT GENERAL NOTES
7-8	SC1-SC2	SURVEY CONTROL PLANS
9-13	DET1-DET5	DETAILS
14	TS	TYPICAL CROSS-SECTION
15-19	C1-C5	HIGHWAY CONSTRUCTION PLANS
20-27	HP1-HP8	HIGHWAY PROFILES
28-35	U1-U8	UTILITY PLANS AND PROFILES
36-39	PM1-PM4	PAVEMENT MARKING PLANS
40-44	TS1-TS5	TRAFFIC SIGNAL PLANS
45-48	SL1-SL4	STREET LIGHTING PLANS
49-56	MPT1-MPT8	MAINTENANCE AND PROTECTION OF TRAFFIC PLANS
57-60	B1-B4	BORING PLANS
61-70	TM1-TM10	TREE MITIGATION PLANS
71-74	LS1-LS4	LANDSCAPING PLANS
75-76	PD1-PD2	PLANTING DETAILS
77	WF1	WAYFINDING SIGN DETAILS
78-81		FDNY DRAWINGS

(NO TEXT ON THIS PAGE)

LIST OF STANDARD DRAWINGS

DRAWING NO.	REVISED DATE	DESCRIPTION	AGENCY
H-1003B	7/1/2010	PEDESTRIAN CROSSWALKS-MALL TYPE-B	HIGHWAYS
H-1004	7/1/2010	TYPICAL TEMPORARY PEDESTRIAN PASSAGEWAY IN ROADWAY AREA DURING CONSTRUCTION	HIGHWAYS
H-1005	7/1/2010	BUS STOP IN NEW ROADWAYS	HIGHWAYS
H-1010	7/1/2010	STEEL FACED CURB/ STEEL FACING TYPE D	HIGHWAYS
H-1011	7/1/2010	SIDEWALK PEDESTRIAN RAMPS	HIGHWAYS
H-1012	7/1/2010	TIMBER CURB	HIGHWAYS
H-1013	7/1/2010	ILLUMINATED TIMBER BARRICADE	HIGHWAYS
H-1014	7/1/2010	TEMPORARY PEDESTRIAN STEEL BARRICADE	HIGHWAYS
H-1034	7/1/2010	TYPICAL CONSTRUCTION JOINTS FOR CONCRETE BASE FOR PAVEMENT	HIGHWAYS
H-1040	7/1/2010	TRANSVERSE CONSTRUCTION JOINTS FOR CONCRETE BASE	HIGHWAYS
H-1042A	7/1/2010	STANDARD TRENCH OR HOLE RESTORATION FOR STREETS PROTECTED BY NYC ADMINISTRATION CODE 19-144	HIGHWAYS
H-1045	7/1/2010	CONCRETE SIDEWALK	HIGHWAYS
H-1046	7/1/2010	STREET TREE PLANTING DETAIL TYPE 1	HIGHWAYS
H-1046A	7/1/2010	PROTECTIVE TREE BARRIER	HIGHWAYS
H-1049	7/1/2010	PLASTIC BARREL	HIGHWAYS
H-1053	7/1/2010	DETAILS FOR CONSTRUCTING AREAS OF ADJUSTMENT AND TRANSITION SECTIONS	HIGHWAYS
H-1054	7/1/2010	LIMITS OF MEASUREMENT FOR PAYMENT OF TEMPORARY ASPHALT PAVEMENT	HIGHWAYS
H-1057	7/1/2010	TEMPORARY STORAGE AREA``	HIGHWAYS
MS-1000	7/1/2010	NEW YORK CITY COMPARISON OF DATUM PLANES	HIGHWAYS
MS-1005	7/1/2010	ADJUSTMENT AT CATCH BASINS	HIGHWAYS
TAR-1	2/24/2004	TYPICAL PAVEMENT MARKINGS LANE ARROWS	TRAFFIC
TBB-1	11/16/2008	TYPICAL CLASS II BIKE LANE MARKINGS WITH BUFFERS	TRAFFIC
TBI-1	11/16/2008	TYPICAL TREATMENTS FOR BICYCLE INTERSECTIONS MARKINGS	TRAFFIC
TBS-2	11/18/2008	TYPICAL BUS STOP PAVEMENT MARKINGS	TRAFFIC
TCW-1	4/5/2006	TYPICAL PAVEMENT MARKINGS PEDESTRIAN CROSSWALKS AND STRIPING	TRAFFIC
TEL-1	6/10/2003	TYPICAL EDGE LINE MARKINGS FOR CITY STREETS, PARKWAYS, AND HIGHWAYS	TRAFFIC
TRF-1	4/7/2008	TYPICAL GREEN REFUGE ISLANDS	TRAFFIC
TRF-2	10/1/2009	GREEN REFUGE ISLAND TYPICAL GEOMETRY	TRAFFIC
TSB-1	4/17/2002	TYPICAL PAVEMENT MARKINGS FOR SPEED BUMPS	TRAFFIC
TSS-1	3/21/2002	TYPICAL PAVEMENT MARKINGS SPECIAL SYMBOLS	TRAFFIC
TWM-1	3/21/2002	TYPICAL PAVEMENT MARKINGS WORD MESSAGES	TRAFFIC

(NO TEXT ON THIS PAGE)

BID SCHEDULE

NOTICE TO BIDDERS

Items listed in this Bid Schedule which have one (1) digit followed by a decimal (e.g. 4.02 CB), except for items beginning with the number "8.01", shall comply with the requirements of the corresponding numerical Sections of the NYCDOT Standard Highway Specifications, dated August 15, 2015, as amended by I-PAGES, herein Volume 3 of 3.

Items listed in this Bid Schedule which have two (2) digits beginning with the number "5" or "6" or "7" followed by a decimal (e.g. 52.11D12, 60.11R612, 70.31FN) shall comply with the requirements of the New York City Department of Environmental Protection (NYCDEP) Standard Sewer and Water Main Specifications, dated July 1, 2014, as amended by SW-PAGES, herein Volume 3 of 3.

Items listed in this Bid Schedule beginning with the number "8.01" followed by a letter (e.g. 8.01 C2) shall comply with the requirements of the corresponding numerical Sections of the DDC Specifications for Handling, Transportation and Disposal of Nonhazardous and Potentially Hazardous Contaminated Materials contained in HAZ-PAGES, herein Volume 3 of 3.

Item number "637.9520" listed in this Bid Schedule shall comply with the requirements of the Section "637.9520" contained in I-PAGES, herein Volume 3 of 3.

Item number "NYC-665.16000011" listed in this Bid Schedule is modified version of the New York State Department of Transportation (NYSDOT) Specifications and shall comply with the requirement of the Section "NYC-665.16000011" contained in I-PAGES, herein Volume 3 of 3.

However in the Specifications for items referred to in the above four and five paragraphs, all references to the "Department", "Materials Bureau", "Regional Engineer", etc., shall be deemed to mean the "Engineer". Where any reference is made on the plans or specifications to the "State" or any of its officials, the Contractor shall substitute the City of New York, Department of Design and Construction, or any of its appropriate officials. The NYSDOT Specifications described above neither imply the State's involvement in any testing and approval of materials, nor in the supervision of construction.

Items listed in this Bid Schedule beginning with the prefix "SL-" (e.g. SL-21.09.08) are Street Lighting Items, less the prefix, which shall be done in accordance with the requirements of Sub-Section 1.06.23.(D) and Section 1.06.49 in the NYCDOT Standard Highway Specifications.

Items listed in this Bid Schedule beginning with the prefix "T-" (e.g. T-2.22) are Traffic Items, less the prefix, which shall be done in accordance with the requirements of Sub-Section 1.06.23.(D) and Section 1.06.49 in the NYCDOT Standard Highway Specifications.

Items listed in this Bid Schedule beginning with the prefix "UTL-" (e.g. UTL-6.07) are for Gas Cost Sharing (EP-7) work and shall comply with the requirements of EP7-PAGES, herein Volume 3 of 3.

BID SCHEDULE

NOTE: (1) The Agency may reject a bid if it contains unbalanced bid prices. An unbalanced bid is considered to be one containing lump sum or unit items which do not reflect reasonable actual costs plus a reasonable proportionate share of the Bidder's anticipated profit, overhead costs, and other indirect costs, anticipated for the performance of the items in question.

(2) The following bid prices on Unit Price Contracts are to be paid for the actual quantities of the item numbers in the completed work or structure, and they cover the cost of all work, labor, material, tools, plant and appliances of every description necessary to complete the entire work, as specified, and the removal of all debris, temporary work and appliances.

(3) PLEASE BE SURE A LEGIBLE BID IS ENTERED, IN INK, FOR EACH ITEM.
Alterations must be initialed in ink by the bidder.

(4) The Extended Amount entered in Column 6 shall be the product of the Estimated Quantity in Column 3 times the Unit Price Bid in Column 5.

(5) Prospective bidders must examine the Bid Schedule carefully and, before bidding, must advise the Commissioner, in writing, if any pages are missing, and must request that such missing pages be furnished them. The pages of this Bid Schedule are numbered consecutively, as follows:
B - 3 Through B - 40

PLEASE BE SURE A LEGIBLE BID IS ENTERED FOR EACH ITEM.
THE BIDDER SHALL INSERT THE TOTAL BID PRICE IN
THE BID FORM ON PAGE C-4 OF THIS BID BOOKLET.

NEW YORK CITY DEPARTMENT OF DESIGN AND CONSTRUCTION
DIVISION OF INFRASTRUCTURE - BUREAU OF DESIGN

PROJECT ID: HWXP136B
CONTRACT PIN: 8502016HW0061C

BID SCHEDULE FORM

COL 1	COL 2	COL 3	COL 4	COL 5		COL 6	
		ENGINEER'S ESTIMATE		UNIT PRICE (IN FIGURES)		EXTENDED AMOUNT (IN FIGURES)	
SEQ. NO	ITEM NUMBER and DESCRIPTION	OF QUANTITY	UNIT	DOLLARS	CTS	DOLLARS	CTS
001	**4.02 AF-R** ASPHALTIC CONCRETE WEARING COURSE, 2" THICK	19,670.00	S.Y.				
002	**4.02 AG** ASPHALTIC CONCRETE WEARING COURSE, 3" THICK	23,000.00	S.Y.				
003	**4.02 CB** ASPHALTIC CONCRETE MIXTURE	2,860.00	TONS				
004	**4.04 H** CONCRETE BASE FOR PAVEMENT, VARIABLE THICKNESS FOR TRENCH RESTORATION, (HIGH-EARLY STRENGTH)	230.00	C.Y.				
005	**4.04 HD** CONCRETE BASE FOR PAVEMENT, 9" THICK (HIGH-EARLY STRENGTH)	6,060.00	C.Y.				
006	**4.05 AX** HIGH-EARLY STRENGTH REINFORCED CONCRETE PAVEMENT (BUS STOPS)	350.00	C.Y.				

NEW YORK CITY DEPARTMENT OF DESIGN AND CONSTRUCTION
DIVISION OF INFRASTRUCTURE - BUREAU OF DESIGN

PROJECT ID: HWXP136B
CONTRACT PIN: 8502016HW0061C

BID SCHEDULE FORM

COL. 1 SEQ. NO	COL. 2 ITEM NUMBER and DESCRIPTION	COL. 3 ENGINEER'S ESTIMATE OF QUANTITIY	COL. 4 UNIT	COL. 5 UNIT PRICE (IN FIGURES) DOLLARS	CTS	COL. 6 EXTENDED AMOUNT (IN FIGURES) DOLLARS	CTS
007	**4.05 BX** HIGH-EARLY STRENGTH REINFORCED CONCRETE PAVEMENT (FULL WIDTH PAVEMENT)	40.00	C.Y.				
008	**4.06 SC** SELF-CONSOLIDATING CONCRETE IN STRUCTURES	1,680.00	C.Y.				
009	**4.09 AE** STRAIGHT STEEL FACED CONCRETE CURB (21" DEEP)	13,850.00	L.F.				
010	**4.09 AF** STRAIGHT STEEL FACED CONCRETE CURB (27" DEEP)	850.00	L.F.				
011	**4.09 BE** DEPRESSED STEEL FACED CONCRETE CURB (21" DEEP)	50.00	L.F.				
012	**4.09 CE** CORNER STEEL FACED CONCRETE CURB (21" DEEP)	1,440.00	L.F.				

NEW YORK CITY DEPARTMENT OF DESIGN AND CONSTRUCTION
DIVISION OF INFRASTRUCTURE - BUREAU OF DESIGN

PROJECT ID: HWXP136B
CONTRACT PIN: 8502016HW0061C

BID SCHEDULE FORM

COL 1 SEQ. NO	COL 2 ITEM NUMBER and DESCRIPTION	COL 3 ENGINEER'S ESTIMATE OF QUANTITIY	COL 4 UNIT	COL 5 UNIT PRICE (IN FIGURES) DOLLARS	CTS	COL 6 EXTENDED AMOUNT (IN FIGURES) DOLLARS	CTS
013	4.11 CA FILL, PLACE MEASUREMENT	100.00	C.Y.				
014	4.13 AAS 4" CONCRETE SIDEWALK (UNPIGMENTED)	176,760.00	S.F.				
015	4.13 BAS 7" CONCRETE SIDEWALK (UNPIGMENTED)	5,550.00	S.F.				
016	4.13 DE EMBEDDED PREFORMED DETECTABLE WARNING UNITS	1,480.00	S.F.				
017	4.14 STEEL REINFORCEMENT BARS	233,250.00	LBS.				
018	4.14 W WELDED STEEL WIRE FABRIC	500.00	LBS.				

NEW YORK CITY DEPARTMENT OF DESIGN AND CONSTRUCTION
DIVISION OF INFRASTRUCTURE - BUREAU OF DESIGN

PROJECT ID: HWXP136B
CONTRACT PIN: 8502016HW0061C

BID SCHEDULE FORM

COL. 1 SEQ. NO	COL. 2 ITEM NUMBER and DESCRIPTION	COL. 3 ENGINEER'S ESTIMATE OF QUANTITIY	COL. 4 UNIT	COL. 5 UNIT PRICE (IN FIGURES) DOLLARS	CTS	COL. 6 EXTENDED AMOUNT (IN FIGURES) DOLLARS	CTS
019	**4.15** TOPSOIL	1,750.00	C.Y.				
020	**4.15 SS** STRUCTURAL SOIL FOUNDATION MATERIAL	310.00	C.Y.				
021	**4.16 AA** TREES REMOVED (4" TO UNDER 12" CALIPER)	14.00	EACH				
022	**4.16 AB** TREES REMOVED (12" TO UNDER 18" CALIPER)	1.00	EACH				
023	**4.16 BA510** TREES PLANTED, 2-1/2" TO 3" CALIPER, ALL TYPES, IN 5' X 10' TREE PITS	13.00	EACH				
024	**4.16 CAA** TREES PLANTED, 2-1/2" TO 3" CALIPER, ALL TYPES	22.00	EACH				

NEW YORK CITY DEPARTMENT OF DESIGN AND CONSTRUCTION
DIVISION OF INFRASTRUCTURE - BUREAU OF DESIGN

PROJECT ID: HWXP136B
CONTRACT PIN: 8502016HW0061C

BID SCHEDULE FORM

COL. 1 SEQ. NO	COL. 2 ITEM NUMBER and DESCRIPTION	COL. 3 ENGINEER'S ESTIMATE OF QUANTITIY	COL. 4 UNIT	COL. 5 UNIT PRICE (IN FIGURES) DOLLARS	CTS	COL. 6 EXTENDED AMOUNT (IN FIGURES) DOLLARS	CTS
025	**4.16 STUMP** STUMP REMOVAL	7.00	UNITS				
026	**4.18 A** MAINTENANCE TREE PRUNING (UNDER 12" CAL.)	97.00	EACH				
027	**4.18 B** MAINTENANCE TREE PRUNING (12" TO UNDER 18" CAL.)	17.00	EACH				
028	**4.18 C** MAINTENANCE TREE PRUNING (18" TO UNDER 24" CAL.)	5.00	EACH				
029	**4.21** TREE CONSULTANT	1,260.00	P/HR				
030	**50.31CE15** 15" E.S.V.P. COMBINED SEWER, ENCASED IN CONCRETE	100.00	L.F.				

NEW YORK CITY DEPARTMENT OF DESIGN AND CONSTRUCTION
DIVISION OF INFRASTRUCTURE - BUREAU OF DESIGN

PROJECT ID: HWXP136B
CONTRACT PIN: 8502016HW0061C

BID SCHEDULE FORM

COL. 1 SEQ. NO	COL. 2 ITEM NUMBER and DESCRIPTION	COL. 3 ENGINEER'S ESTIMATE OF QUANTITIY	COL. 4 UNIT	COL. 5 UNIT PRICE (IN FIGURES) DOLLARS	CTS	COL. 6 EXTENDED AMOUNT (IN FIGURES) DOLLARS	CTS
031	**50.31SE12** 12" E.S.V.P. SANITARY SEWER, ENCASED IN CONCRETE	70.00	L.F.				
032	**51.21C000000C** CLEANOUT MANHOLE	4.00	EACH				
033	**51.21S0A1000V** STANDARD MANHOLE TYPE A-1	4.00	EACH				
034	**51.21S0A2000V** STANDARD MANHOLE TYPE A-2	2.00	EACH				
035	**51.23RF** REPLACEMENT OF EXISTING MANHOLE FRAME AND COVER	20.00	EACH				
036	**51.41S001** STANDARD CATCH BASIN, TYPE 1	7.00	EACH				

NEW YORK CITY DEPARTMENT OF DESIGN AND CONSTRUCTION
DIVISION OF INFRASTRUCTURE - BUREAU OF DESIGN

PROJECT ID: HWXP136B
CONTRACT PIN: 8502016HW0061C

BID SCHEDULE FORM

COL. 1 SEQ. NO	COL. 2 ITEM NUMBER and DESCRIPTION	COL. 3 ENGINEER'S ESTIMATE OF QUANTITIY	COL. 4 UNIT	COL. 5 UNIT PRICE (IN FIGURES) DOLLARS	CTS	COL. 6 EXTENDED AMOUNT (IN FIGURES) DOLLARS	CTS
037	**51.41W000** SHALLOW CATCH BASIN	4.00	EACH				
038	**51.42S1SO** INCREMENTAL COST OF STANDARD CATCH BASIN TYPE 3 WITH CURB PIECE IN LIEU OF STANDARD CATCH BASIN TYPE 1	1.00	EACH				
039	**52.11D12** 12" DUCTILE IRON PIPE BASIN CONNECTION	390.00	L.F.				
040	**52.31V06C15** 6" E.S.V.P. SPUR FOR HOUSE CONNECTION ON 15" E.S.V.P. COMBINED SEWER	1.00	EACH				
041	**52.41V06R** 6" E.S.V.P. HOUSE CONNECTION DRAIN ON CONCRETE CRADLE (RECONNECTION)	10.00	L.F.				
042	**53.11DR** TELEVISION INSPECTION AND DIGITAL AUDIO-VISUAL RECORDING OF SEWERS	170.00	L.F.				

NEW YORK CITY DEPARTMENT OF DESIGN AND CONSTRUCTION
DIVISION OF INFRASTRUCTURE - BUREAU OF DESIGN

PROJECT ID: HWXP136B
CONTRACT PIN: 8502016HW0061C

BID SCHEDULE FORM

COL. 1 SEQ. NO	COL. 2 ITEM NUMBER and DESCRIPTION	COL. 3 ENGINEER'S ESTIMATE OF QUANTITTY	COL. 4 UNIT	COL. 5 UNIT PRICE (IN FIGURES) DOLLARS	CTS	COL. 6 EXTENDED AMOUNT (IN FIGURES) DOLLARS	CTS
043	**6.02 AAN** UNCLASSIFIED EXCAVATION	11,250.00	C.Y.				
044	**6.02 XHEC** INCREMENTAL COST FOR MODIFYING WORK METHODS NEAR (WITHIN 3 FEET OF) TRANSIT FACILITIES AND BUILDING VAULTS	240.00	C.Y.				
045	**6.02 XSCW** INCREMENTAL COST FOR USING SPECIAL CARE WORK METHODS NEAR (FROM 3 FEET TO 50 FEET) TRANSIT FACILITIES	11,010.00	C.Y.				
046	**6.06 AB** GRANITE BLOCK SIDEWALK (GROUTED JOINTS) (FURNISH BLOCK)	820.00	S.Y.				
047	**6.22 F** ADDITIONAL HARDWARE	5,000.00	LBS.				
048	**6.23 AB** REMOVE EXISTING FIRE ALARM POST	1.00	EACH				

NEW YORK CITY DEPARTMENT OF DESIGN AND CONSTRUCTION
DIVISION OF INFRASTRUCTURE - BUREAU OF DESIGN

PROJECT ID: HWXP136B
CONTRACT PIN: 8502016HW0061C

BID SCHEDULE FORM

COL. 1 SEQ. NO	COL. 2 ITEM NUMBER and DESCRIPTION	COL. 3 ENGINEER'S ESTIMATE OF QUANTITIY	COL. 4 UNIT	COL. 5 UNIT PRICE (IN FIGURES) DOLLARS	CTS	COL. 6 EXTENDED AMOUNT (IN FIGURES) DOLLARS	CTS
049	**6.23 BA** FURNISH AND INSTALL FIRE ALARM POST AND SUBBASE IN ACCORDANCE WITH F.D. STD. DWG. #141	1.00	EACH				
050	**6.23 BFC** FURNISH AND INSTALL FIRE DEPARTMENT 12 WIRE TERMINAL BOX AND TERMINATE FIRE ALARM CABLES	1.00	EACH				
051	**6.23 BGSE** FURNISH AND INSTALL 4" P.V.C. CONDUIT, SCHEDULE 40, U.L. 651 (WITH PAVEMENT EXCAVATION)	12.00	L.F.				
052	**6.23 BP** FURNISH AND INSTALL FIRE ALARM PEDESTAL BUMPERS (2 REQUIRED PER SET) IN ACCORDANCE WITH F.D. STD. DWG. #168	1.00	SETS				
053	**6.25 RS** TEMPORARY SIGNS	680.00	S.F.				
054	**6.26** TIMBER CURB	13,070.00	L.F.				

NEW YORK CITY DEPARTMENT OF DESIGN AND CONSTRUCTION
DIVISION OF INFRASTRUCTURE - BUREAU OF DESIGN

PROJECT ID: HWXP136B
CONTRACT PIN: 8502016HW0061C

BID SCHEDULE FORM

COL. 1 SEQ. NO	COL. 2 ITEM NUMBER and DESCRIPTION	COL. 3 ENGINEER'S ESTIMATE OF QUANTITIY	COL. 4 UNIT	COL. 5 UNIT PRICE (IN FIGURES) DOLLARS	CTS	COL. 6 EXTENDED AMOUNT (IN FIGURES) DOLLARS	CTS
055	6.28 AA LIGHTED TIMBER BARRICADES	850.00	L.F.				
056	6.36 DR STRUCTURAL REPAIR AND ADJUSTMENT OF UTILITY STRUCTURES	10.00	C.Y.				
057	6.40 D ENGINEER'S FIELD OFFICE (TYPE D)	30.00	MONTH				
058	6.43 PHOTOGRAPHS	1,000.00	SETS				
059	6.44 THERMOPLASTIC REFLECTORIZED PAVEMENT MARKINGS (4" WIDE)	102,300.00	L.F.				
060	6.49 TEMPORARY PAVEMENT MARKINGS (4" WIDE)	10,230.00	L.F.				

NEW YORK CITY DEPARTMENT OF DESIGN AND CONSTRUCTION
DIVISION OF INFRASTRUCTURE - BUREAU OF DESIGN

PROJECT ID: HWXP136B
CONTRACT PIN: 8502016HW0061C

BID SCHEDULE FORM

COL. 1 SEQ. NO	COL. 2 ITEM NUMBER and DESCRIPTION	COL. 3 ENGINEER'S ESTIMATE OF QUANTITIY	COL. 4 UNIT	COL. 5 UNIT PRICE (IN FIGURES) DOLLARS	CTS	COL. 6 EXTENDED AMOUNT (IN FIGURES) DOLLARS	CTS
061	6.50 CLEANING OF DRAINAGE STRUCTURES	7.00	EACH				
062	6.52 FED UNIFORMED FLAGPERSON PRICE BID SHALL BE FOR THE FIXED SUM OF $ 312,000.00	1.00	F.S.	312,000	00	$312,000	00
063	6.53 REMOVE EXISTING LANE MARKINGS (4" WIDE)	5,090.00	L.F.				
064	6.55 SAWCUTTING EXISTING PAVEMENT	8,570.00	L.F.				
065	6.67 SUBBASE COURSE, SELECT GRANULAR MATERIAL	720.00	C.Y.				

NEW YORK CITY DEPARTMENT OF DESIGN AND CONSTRUCTION
DIVISION OF INFRASTRUCTURE - BUREAU OF DESIGN

PROJECT ID: HWXP136B
CONTRACT PIN: 8502016HW0061C

BID SCHEDULE FORM

COL. 1 SEQ. NO	COL. 2 ITEM NUMBER and DESCRIPTION	COL. 3 ENGINEER'S ESTIMATE OF QUANTITIY	COL. 4 UNIT	COL. 5 UNIT PRICE (IN FIGURES) DOLLARS	CTS	COL. 6 EXTENDED AMOUNT (IN FIGURES) DOLLARS	CTS
066	6.68 PLASTIC FILTER FABRIC	7,050.00	S.Y.				
067	6.75 GRINDING EXISTING ASPHALTIC CONCRETE WEARING COURSE	4,820.00	C.Y.				
068	6.82 A REMOVING EXISTING TRAFFIC AND STREET NAME SIGNS	480.00	S.F.				
069	6.82 B REMOVING EXISTING TRAFFIC AND STREET NAME SIGN POSTS	756.00	L.F.				
070	6.83 AA FURNISHING NEW NON-REFLECTORIZED TRAFFIC SIGNS	240.00	S.F.				
071	6.83 AB FURNISHING NEW TRAFFIC SIGN POSTS	420.00	L.F.				

NEW YORK CITY DEPARTMENT OF DESIGN AND CONSTRUCTION
DIVISION OF INFRASTRUCTURE - BUREAU OF DESIGN

PROJECT ID: HWXP136B
CONTRACT PIN: 8502016HW0061C

BID SCHEDULE FORM

COL. 1 SEQ. NO	COL. 2 ITEM NUMBER and DESCRIPTION	COL. 3 ENGINEER'S ESTIMATE OF QUANTITIY	COL. 4 UNIT	COL. 5 UNIT PRICE (IN FIGURES) DOLLARS	CTS	COL. 6 EXTENDED AMOUNT (IN FIGURES) DOLLARS	CTS
072	6.83 AR FURNISHING NEW REFLECTORIZED TRAFFIC SIGNS	240.00	S.F.				
073	6.83 BA INSTALLING TRAFFIC SIGNS	480.00	S.F.				
074	6.83 BB INSTALLING TRAFFIC SIGN POSTS	420.00	L.F.				
075	6.84 B LOLLIPOP TYPE BUS STOP SIGNS PRICE BID SHALL BE FOR THE FIXED SUM OF $ 38,500.00	1.00	F.S.	38,500	00	$38,500	00
076	6.85 A TRAFFIC ENFORCEMENT AGENTS PRICE BID SHALL BE FOR THE FIXED SUM OF $ 1,303,390.65	1.00	F.S.	1,303,390	65	$1,303,390	65

NEW YORK CITY DEPARTMENT OF DESIGN AND CONSTRUCTION
DIVISION OF INFRASTRUCTURE - BUREAU OF DESIGN

PROJECT ID: HWXP136B
CONTRACT PIN: 8502016HW0061C

BID SCHEDULE FORM

COL. 1 SEQ. NO	COL. 2 ITEM NUMBER and DESCRIPTION	COL. 3 ENGINEER'S ESTIMATE OF QUANTITIY	COL. 4 UNIT	COL. 5 UNIT PRICE (IN FIGURES) DOLLARS	CTS	COL. 6 EXTENDED AMOUNT (IN FIGURES) DOLLARS	CTS
077	**6.86 AA** FURNISHING NEW STREET NAME SIGNS	30.00	S.F.				
078	**6.86 AB** FURNISHING NEW STREET NAME SIGN POSTS	336.00	L.F.				
079	**6.86 BA** INSTALLING STREET NAME SIGNS	30.00	S.F.				
080	**6.86 BB** INSTALLING STREET NAME SIGN POSTS	336.00	L.F.				
081	**6.87** PLASTIC BARRELS	5,440.00	EACH				
082	**6.91** REFLECTIVE CRACKING MEMBRANE (18" WIDE)	15,920.00	L.F.				

NEW YORK CITY DEPARTMENT OF DESIGN AND CONSTRUCTION
DIVISION OF INFRASTRUCTURE - BUREAU OF DESIGN

PROJECT ID: HWXP136B
CONTRACT PIN: 8502016HW0061C

BID SCHEDULE FORM

COL. 1 SEQ. NO	COL. 2 ITEM NUMBER and DESCRIPTION	COL. 3 ENGINEER'S ESTIMATE OF QUANTITIY	COL. 4 UNIT	COL. 5 UNIT PRICE (IN FIGURES) DOLLARS	CTS	COL. 6 EXTENDED AMOUNT (IN FIGURES) DOLLARS	CTS
083	6.99 AUDIO AND VIDEO DOCUMENTATION SURVEY	1.00	L.S.				
084	60.11R612 FURNISHING AND DELIVERING 12-INCH DUCTILE IRON RESTRAINED JOINT PIPE (CLASS 56)	230.00	L.F.				
085	60.12D12 LAYING 12-INCH DUCTILE IRON PIPE AND FITTINGS	300.00	L.F.				
086	60.13M0A24 FURNISHING AND DELIVERING DUCTILE IRON MECHANICAL JOINT 24 -INCH DIAMETER AND SMALLER FITTINGS, INCLUDING WEDGE TYPE RETAINER GLANDS	2.00	TONS				
087	62.14FS FURNISHING, DELIVERING AND INSTALLING HYDRANT FENDERS	10.00	EACH				

NEW YORK CITY DEPARTMENT OF DESIGN AND CONSTRUCTION
DIVISION OF INFRASTRUCTURE - BUREAU OF DESIGN

PROJECT ID: HWXP136B
CONTRACT PIN: 8502016HW0061C

BID SCHEDULE FORM

COL. 1 SEQ. NO	COL. 2 ITEM NUMBER and DESCRIPTION	COL. 3 ENGINEER'S ESTIMATE OF QUANTITIY	COL. 4 UNIT	COL. 5 UNIT PRICE (IN FIGURES) DOLLARS	CTS	COL. 6 EXTENDED AMOUNT (IN FIGURES) DOLLARS	CTS
088	637.9520 FIELD INFORMATION MANAGEMENT SYSTEM **PRICE BID SHALL BE FOR THE FIXED SUM OF $ 50,000.00**	1.00	F.S.	50,000	00	$50,000	00
089	65.11BR FURNISHING, DELIVERING AND INSTALLING BANDS, RODS, WASHERS, ETC., COMPLETE, FOR RESTRAINING JOINTS	1,000.00	LBS.				
090	65.21PS FURNISHING AND PLACING POLYETHYLENE SLEEVE **Unit price bid shall not be less than: $ 0.50**	140.00	L.F.				
091	65.31FF FURNISHING, DELIVERING AND PLACING FILTER FABRIC **Unit price bid shall not be less than: $ 0.10**	2,100.00	S.F.				
092	65.71SG FURNISHING, DELIVERING AND PLACING SCREENED GRAVEL OR SCREENED BROKEN STONE BEDDING	10.00	C.Y.				

NEW YORK CITY DEPARTMENT OF DESIGN AND CONSTRUCTION
DIVISION OF INFRASTRUCTURE - BUREAU OF DESIGN

PROJECT ID: HWXP136B
CONTRACT PIN: 8502016HW0061C

BID SCHEDULE FORM

COL. 1 SEQ. NO	COL. 2 ITEM NUMBER and DESCRIPTION	COL. 3 ENGINEER'S ESTIMATE OF QUANTITIY	COL. 4 UNIT	COL. 5 UNIT PRICE (IN FIGURES) DOLLARS	CTS	COL. 6 EXTENDED AMOUNT (IN FIGURES) DOLLARS	CTS
093	**7.01 AB** INSTALLING NEW OR RESET EXISTING SIDEWALK SUBWAY FRAMES AND GRATINGS	6,050.00	S.F.				
094	**7.01 C** FURNISH NEW SIDEWALK SUBWAY FRAMES AND GRATINGS	6,050.00	S.F.				
095	**7.02** EPOXY MORTAR REPAIRS	300.00	C.F.				
096	**7.13 B** MAINTENANCE OF SITE **Unit price bid shall not be less than: $ 8,000.00**	24.00	MONTH				
097	**7.16 D** TEST PITS	85.00	C.Y.				
098	**7.36** PEDESTRIAN STEEL BARRICADES	23,470.00	L.F.				

NEW YORK CITY DEPARTMENT OF DESIGN AND CONSTRUCTION
DIVISION OF INFRASTRUCTURE - BUREAU OF DESIGN

PROJECT ID: HWXP136B
CONTRACT PIN: 8502016HW0061C

BID SCHEDULE FORM

COL. 1 SEQ. NO	COL. 2 ITEM NUMBER and DESCRIPTION	COL. 3 ENGINEER'S ESTIMATE OF QUANTITIY	COL. 4 UNIT	COL. 5 UNIT PRICE (IN FIGURES) DOLLARS . CTS	COL. 6 EXTENDED AMOUNT (IN FIGURES) DOLLARS . CTS
099	**7.88 A** RODENT INFESTATION SURVEY AND MONITORING **Unit price bid shall not be less than: $ 6,000.00**	1.00	L.S.		
100	**7.88 AB** RODENT BAIT STATIONS **Unit price bid shall not be less than: $ 60.00**	1,536.00	EACH		
101	**7.88 AC** BAITING OF RODENT BAIT STATIONS **Unit price bid shall not be less than: $ 9.50**	1,536.00	EACH		
102	**7.88 AD** WATERBUG BAIT APPLICATIONS **Unit price bid shall not be less than: $ 65.00**	192.00	BLOCK		
103	**70.31FN** FENCING **Unit price bid shall not be less than: $ 2.00**	1,350.00	L.F.		
104	**70.81CB** CLEAN BACKFILL **Unit price bid shall not be less than: $ 15.00**	40.00	C.Y.		

NEW YORK CITY DEPARTMENT OF DESIGN AND CONSTRUCTION
DIVISION OF INFRASTRUCTURE - BUREAU OF DESIGN

PROJECT ID: HWXP136B
CONTRACT PIN: 8502016HW0061C

BID SCHEDULE FORM

COL. 1 SEQ. NO	COL. 2 ITEM NUMBER and DESCRIPTION	COL. 3 ENGINEER'S ESTIMATE OF QUANTITIY	COL. 4 UNIT	COL. 5 UNIT PRICE (IN FIGURES) DOLLARS	CTS	COL. 6 EXTENDED AMOUNT (IN FIGURES) DOLLARS	CTS
105	**70.91SW12** FURNISHING AND PLACING SHEETING AND BRACING IN TRENCH FOR WATER MAIN PIPE 12-INCH IN DIAMETER AND LESS	2,000.00	S.F.				
106	**73.21AC** ADDITIONAL CONCRETE **Unit price bid shall not be less than: $ 62.50**	5.00	C.Y.				
107	**73.31AE0** ADDITIONAL EARTH EXCAVATION INCLUDING TEST PITS (ALL DEPTHS) **Unit price bid shall not be less than: $ 20.00**	10.00	C.Y.				
108	**73.41AG** ADDITIONAL SELECT GRANULAR BACKFILL **Unit price bid shall not be less than: $ 15.00**	10.00	C.Y.				
109	**8.01 C1** HANDLING, TRANSPORTING AND DISPOSAL OF NON-HAZARDOUS CONTAMINATED SOIL	2,000.00	TONS				
110	**8.01 C2** SAMPLING AND TESTING OF CONTAMINATED/POTENTIALLY HAZARDOUS SOIL FOR DISPOSAL PURPOSES	5.00	SETS				

NEW YORK CITY DEPARTMENT OF DESIGN AND CONSTRUCTION
DIVISION OF INFRASTRUCTURE - BUREAU OF DESIGN

PROJECT ID: HWXP136B
CONTRACT PIN: 8502016HW0061C

BID SCHEDULE FORM

COL. 1 SEQ. NO	COL. 2 ITEM NUMBER and DESCRIPTION	COL. 3 ENGINEER'S ESTIMATE OF QUANTITIY	COL. 4 UNIT	COL. 5 UNIT PRICE (IN FIGURES) DOLLARS	CTS	COL. 6 EXTENDED AMOUNT (IN FIGURES) DOLLARS	CTS
111	**8.01 H** HANDLING, TRANSPORTING AND DISPOSAL OF HAZARDOUS SOIL	10.00	TONS				
112	**8.01 S** HEALTH AND SAFETY	1.00	L.S.				
113	**8.01 W1** REMOVAL, TREATMENT, AND DISCHARGE/DISPOSAL OF CONTAMINATED WATER	2.00	DAY				
114	**8.01 W2** SAMPLING AND TESTING OF CONTAMINATED WATER	2.00	SETS				
115	**8.02 A** SPECIAL CARE EXCAVATION AND RESTORATION FOR SIDEWALK WORK	36,760.00	S.F.				
116	**8.02 B** SPECIAL CARE EXCAVATION AND RESTORATION FOR CURB WORK	5,260.00	L.F.				

NEW YORK CITY DEPARTMENT OF DESIGN AND CONSTRUCTION
DIVISION OF INFRASTRUCTURE - BUREAU OF DESIGN

PROJECT ID: HWXP136B
CONTRACT PIN: 8502016HW0061C

BID SCHEDULE FORM

COL. 1 SEQ. NO	COL. 2 ITEM NUMBER and DESCRIPTION	COL. 3 ENGINEER'S ESTIMATE OF QUANTITIY	COL. 4 UNIT	COL. 5 UNIT PRICE (IN FIGURES) DOLLARS	CTS	COL. 6 EXTENDED AMOUNT (IN FIGURES) DOLLARS	CTS
117	8.07 TEMPORARY ALUMINUM PEDESTRIAN BRIDGE	10.00	EACH				
118	8.08 VMS VARIABLE MESSAGE SIGN	1.00	EACH				
119	8.22 D THREE PLY MEMBRANE WATERPROOFING	2,880.00	S.F.				
120	8.32 BARK CHIP MULCH	2,950.00	S.Y.				
121	9.00 C EXPLORATORY TEST PITS	100.00	C.F.				

NEW YORK CITY DEPARTMENT OF DESIGN AND CONSTRUCTION
DIVISION OF INFRASTRUCTURE - BUREAU OF DESIGN

PROJECT ID: HWXP136B
CONTRACT PIN: 8502016HW0061C

BID SCHEDULE FORM

COL. 1 SEQ. NO	COL. 2 ITEM NUMBER and DESCRIPTION	COL. 3 ENGINEER'S ESTIMATE OF QUANTITY	COL. 4 UNIT	COL. 5 UNIT PRICE (IN FIGURES) DOLLARS	CTS	COL. 6 EXTENDED AMOUNT (IN FIGURES) DOLLARS	CTS
122	9.04 HW ALLOWANCE FOR ANTI-FREEZE ADDITIVE IN CONCRETE PRICE BID SHALL BE FOR THE FIXED SUM OF $ 50,000.00	1.00	F.S.	50,000	00	$50,000	00
123	9.07 ARB NON-WOVEN GEOTEXTILE - ROOT BARRIER	2,450.00	S.Y.				
124	9.07 AWB NON-WOVEN GEOTEXTILE - WEED BARRIER	2,290.00	S.Y.				
125	9.99 M FLASHING ARROW BOARD	24.00	MONTH				
126	NYC-665.16000011 FURNISH AND INSTALL BOLLARDS	65.00	EACH				

NEW YORK CITY DEPARTMENT OF DESIGN AND CONSTRUCTION
DIVISION OF INFRASTRUCTURE - BUREAU OF DESIGN

PROJECT ID: HWXP136B
CONTRACT PIN: 8502016HW0061C

BID SCHEDULE FORM

COL. 1 SEQ. NO	COL. 2 ITEM NUMBER and DESCRIPTION	COL. 3 ENGINEER'S ESTIMATE OF QUANTITIY	COL. 4 UNIT	COL. 5 UNIT PRICE (IN FIGURES) DOLLARS	CTS	COL. 6 EXTENDED AMOUNT (IN FIGURES) DOLLARS	CTS
127	**SL-20.02.10** FURNISH AND INSTALL STANDARD TYPE ANCHOR BOLT FOUNDATION AS PER DWG J-5253 FOR INSTALLING TYPE "BC", "M", LYRE AND "5TH AVENUE" ,"GCPW", LAMPPOST.	5.00	EACH				
128	**SL-20.02.11** MODIFY STANDARD TYPE ANCHOR BOLT FOUNDATION AS PER DWG J-5253, FOR INSTALLING TYPE "BC", "M", LYRE AND "5TH AVENUE" LAMPPOST.	36.00	EACH				
129	**SL-20.08.01** REMOVE STANDARD TYPE ANCHOR BOLT CONCRETE FOUNDATION	12.00	EACH				
130	**SL-21.04.14** FURNISH AND INSTALL TYPE "M" LAMPPOST WITH P.E.C. RECEPTACLE, AS PER DRAWING H-5260.	20.00	EACH				
131	**SL-21.04.16** FURNISH AND INSTALL TYPE "M" TWIN ARM LAMPPOST WITH RECEPTACLE, AS PER DRAWING H-5260	21.00	EACH				

NEW YORK CITY DEPARTMENT OF DESIGN AND CONSTRUCTION
DIVISION OF INFRASTRUCTURE - BUREAU OF DESIGN

PROJECT ID: HWXP136B
CONTRACT PIN: 8502016HW0061C

BID SCHEDULE FORM

COL. 1 SEQ. NO	COL. 2 ITEM NUMBER and DESCRIPTION	COL. 3 ENGINEER'S ESTIMATE OF QUANTITTY	COL. 4 UNIT	COL. 5 UNIT PRICE (IN FIGURES) DOLLARS	CTS	COL. 6 EXTENDED AMOUNT (IN FIGURES) DOLLARS	CTS
132	**SL-21.09.05** REMOVE STANDARD FABRICATED STEEL, SPUN ALUMINUM NO. 10, ETC. WITH ARM(S), LUMINAIRE(S), CONTROL(S) WITH ALL ATTACHMENTS, IF ANY.	41.00	EACH				
133	**SL-21.09.08** REMOVE ALL STREET LIGHTING EQUIPMENT FROM TYPE "M-2" TRAFFIC POST (ARM(S), PHOTOELECTRIC CONTROLLER, LUMINAIRE (S), SHAFT EXTENSION, WIRING, ETC.)	4.00	EACH				
134	**SL-22.06.19** FURNISH AND INSTALL MAXIMUM 150 WATT LED TYPE "TEAR DROP" LUMINAIRE	81.00	EACH				
135	**SL-24.04.02** FURNISH AND INSTALL TYPE "M" SHAFT EXTENSION AND ARM ASSEMBLY WITH PHOTOELECTRIC CONTROL RECEPTACLE FOR "M-2" TRAFFIC POST, AS PER DRAWING H-5268. M-2 ORNAMENTAL CASTINGS FURNISHED AND INSTALLED BY OTHERS.	6.00	EACH				
136	**SL-24.04.04** FURNISH AND INSTALL "M" TWIN ARMS/SHAFT EXTENSION ASSEMBLY WITH P.E.C. RECEPTACLE FOR M-2 TRAFFIC POST AS PER DWG H-5268. M-2 ORNAMENTAL CASTINGS FURNISHED AND INSTALLED BY OTHERS PER UNIT ITEM.	7.00	EACH				

NEW YORK CITY DEPARTMENT OF DESIGN AND CONSTRUCTION
DIVISION OF INFRASTRUCTURE - BUREAU OF DESIGN

PROJECT ID: HWXP136B
CONTRACT PIN: 8502016HW0061C

BID SCHEDULE FORM

COL. 1 SEQ. NO	COL. 2 ITEM NUMBER and DESCRIPTION	COL. 3 ENGINEER'S ESTIMATE OF QUANTITIY	COL. 4 UNIT	COL. 5 UNIT PRICE (IN FIGURES) DOLLARS	CTS	COL. 6 EXTENDED AMOUNT (IN FIGURES) DOLLARS	CTS
137	SL-26.01.04 FURNISH AND INSTALL LONG LIFE PHOTO ELECTRIC CONTROL WITH SURGE PROTECTION FOR LED LIGHT	54.00	EACH				
138	SL-26.06.02 FURNISH AND INSTALL LED FIRE ALARM LUMINAIRES.	2.00	EACH				
139	SL-31.01.03 PAINT "M-2" TRAFFIC POST INCLUDING SHAFT EXTENSION AND ARM	13.00	EACH				
140	T-1.1 INSTALL TYPE "S" OR "T" FOUNDATION	4.00	EACH				
141	T-1.18 REMOVE TYPE "A", "B", "S" OR "T" SERIES FOUNDATION	2.00	EACH				
142	T-1.2 INSTALL TYPE "F-1" FOUNDATION	2.00	EACH				

NEW YORK CITY DEPARTMENT OF DESIGN AND CONSTRUCTION
DIVISION OF INFRASTRUCTURE - BUREAU OF DESIGN

PROJECT ID: HWXP136B
CONTRACT PIN: 8502016HW0061C

BID SCHEDULE FORM

COL. 1 SEQ. NO	COL. 2 ITEM NUMBER and DESCRIPTION	COL. 3 ENGINEER'S ESTIMATE OF QUANTITIY	COL. 4 UNIT	COL. 5 UNIT PRICE (IN FIGURES) DOLLARS	CTS	COL. 6 EXTENDED AMOUNT (IN FIGURES) DOLLARS	CTS
143	T-1.20 REMOVE TYPE "M" SERIES FOUNDATION	13.00	EACH				
144	T-1.3 INSTALL TYPE "M2-5S" FOUNDATION	18.00	EACH				
145	T-1.6 INSTALL TYPE "M2-5T" FOUNDATION	8.00	EACH				
146	T-2.1 INSTALL TYPE "S-1" OR "T-1" SERIES POST	3.00	EACH				
147	T-2.15 REORIENT MAST ARM	2.00	EACH				
148	T-2.16 FURNISH, INSTALL, MAINTAIN AND REMOVE TEMPORARY POST OR PYLON WITH SIGNALS	5.00	EACH				

NEW YORK CITY DEPARTMENT OF DESIGN AND CONSTRUCTION
DIVISION OF INFRASTRUCTURE - BUREAU OF DESIGN

PROJECT ID: HWXP136B
CONTRACT PIN: 8502016HW0061C

BID SCHEDULE FORM

COL. 1 SEQ. NO	COL. 2 ITEM NUMBER and DESCRIPTION	COL. 3 ENGINEER'S ESTIMATE OF QUANTITIY	COL. 4 UNIT	COL. 5 UNIT PRICE (IN FIGURES) DOLLARS	CTS	COL. 6 EXTENDED AMOUNT (IN FIGURES) DOLLARS	CTS
149	T-2.2 INSTALL TYPE "S-14" POST	2.00	EACH				
150	T-2.22 REMOVE TYPE "S-1" OR "T-1" SERIES POST	2.00	EACH				
151	T-2.24 REMOVE TYPE "M" SERIES POST	13.00	EACH				
152	T-2.28 REMOVE MAST ARM FROM ANY POST	5.00	EACH				
153	T-2.4 INSTALL TYPE "M-2" POST	21.00	EACH				
154	T-2.7 INSTALL SHAFT ON "M-2" POST	1.00	EACH				

NEW YORK CITY DEPARTMENT OF DESIGN AND CONSTRUCTION
DIVISION OF INFRASTRUCTURE - BUREAU OF DESIGN

PROJECT ID: HWXP136B
CONTRACT PIN: 8502016HW0061C

BID SCHEDULE FORM

COL. 1 SEQ. NO	COL. 2 ITEM NUMBER and DESCRIPTION	COL. 3 ENGINEER'S ESTIMATE OF QUANTITIY	COL. 4 UNIT	COL. 5 UNIT PRICE (IN FIGURES) DOLLARS	CTS	COL. 6 EXTENDED AMOUNT (IN FIGURES) DOLLARS	CTS
155	T-20000 FURNISH TEN FOOT ALUMINUM SIGNAL POST TYPE "S-1"	3.00	EACH				
156	T-20020 a) FURNISH 3/4" ANCHOR BOLT ASSEMBLIES FOR S-1 (EACH) (3 REQUIRED PER POST)	9.00	EACH				
157	T-20021 b) FURNISH 1" ANCHOR BOLT ASSEMBLIES FOR F-1 (EACH) (4 REQUIRED PER POST)	8.00	EACH				
158	T-20160 FURNISH 20 FOOT SIGNAL MAST ARM POLE ASSEMBLY TYPE "M-2"	20.00	EACH				
159	T-20184 a) FURNISH 5' EXTENSION ARM ASSEMBLY WITH FITTINGS	10.00	EACH				
160	T-20220 c) FURNISH 1-1/4" ANCHOR BOLT ASSEMBLIES FOR M-2 (EACH) (4 REQUIRED PER POST)	1,000.00	EACH				

NEW YORK CITY DEPARTMENT OF DESIGN AND CONSTRUCTION
DIVISION OF INFRASTRUCTURE - BUREAU OF DESIGN

PROJECT ID: HWXP136B
CONTRACT PIN: 8502016HW0061C

BID SCHEDULE FORM

COL. 1 SEQ. NO	COL. 2 ITEM NUMBER and DESCRIPTION	COL. 3 ENGINEER'S ESTIMATE OF QUANTITIY	COL. 4 UNIT	COL. 5 UNIT PRICE (IN FIGURES) DOLLARS	CTS	COL. 6 EXTENDED AMOUNT (IN FIGURES) DOLLARS	CTS
161	T-20640 FURNISH ALUMINUM TRAFFIC SIGNAL POST TYPE "S-14"	2.00	EACH				
162	T-3.1 INSTALL "ONE-WAY" SIGNAL UNIT ON MAST ARM OR TOP OF TRAFFIC POST	29.00	EACH				
163	T-3.15 HOOD ONE SIGNAL HEAD	2.00	EACH				
164	T-3.18 REMOVE SIGNAL HEAD FROM ANY TYPE POST	21.00	EACH				
165	T-3.2 INSTALL "ONE-WAY" SIGNAL UNIT ON THE SHAFT OF ANY POST	7.00	EACH				
166	T-3.21 REMOVE PEDESTRIAN SIGNAL OR SIGN UNIT OR OTHER ILLUMINATED SIGNS FROM ANY POST	25.00	EACH				

NEW YORK CITY DEPARTMENT OF DESIGN AND CONSTRUCTION
DIVISION OF INFRASTRUCTURE - BUREAU OF DESIGN

PROJECT ID: HWXP136B
CONTRACT PIN: 8502016HW0061C

BID SCHEDULE FORM

COL. 1 SEQ. NO	COL. 2 ITEM NUMBER and DESCRIPTION	COL. 3 ENGINEER'S ESTIMATE OF QUANTITY	COL. 4 UNIT	COL. 5 UNIT PRICE (IN FIGURES) DOLLARS	CTS	COL. 6 EXTENDED AMOUNT (IN FIGURES) DOLLARS	CTS
167	T-3.37 INSTALL SIGNAL ON MAST ARM USING RIGID MOUNT BRACKETS	8.00	EACH				
168	T-3.6 INSTALL PEDESTRIAN SIGNAL ON ANY TYPE POST	56.00	EACH				
169	T-31150 FURNISH "1SA" ALUMINUM DIE CASTINGS AND ASSEMBLY FOR POST SIGNAL MOUNTING	2.00	EACH				
170	T-31200 e) "VB" ASSEMBLY *ASSEMBLY IS EQUAL TO ONE PAIR	7.00	EACH				
171	T-31205 FURNISH MAST ARM SIGNAL MOUNTING ASSEMBLY - a) "1MS"	15.00	EACH				
172	T-31210 h) "HUB" ASSEMBLY *ASSEMBLY IS EQUAL TO ONE PAIR	37.00	EACH				

NEW YORK CITY DEPARTMENT OF DESIGN AND CONSTRUCTION
DIVISION OF INFRASTRUCTURE - BUREAU OF DESIGN

PROJECT ID: HWXP136B
CONTRACT PIN: 8502016HW0061C

BID SCHEDULE FORM

COL. 1 SEQ. NO	COL. 2 ITEM NUMBER and DESCRIPTION	COL. 3 ENGINEER'S ESTIMATE OF QUANTITIY	COL. 4 UNIT	COL. 5 UNIT PRICE (IN FIGURES) DOLLARS	CTS	COL. 6 EXTENDED AMOUNT (IN FIGURES) DOLLARS	CTS
173	**T-31215** b) "2MS"	6.00	EACH				
174	**T-31245** FURNISH RIGID MOUNT SIGNAL BRACKETS	8.00	EACH				
175	**T-31340** f) "VB-P" ASSEMBLY *ASSEMBLY IS EQUAL TO ONE PAIR	4.00	EACH				
176	**T-31351** g) "VB-2P" ASSEMBLY *ASSEMBLY IS EQUAL TO ONE PAIR	26.00	EACH				
177	**T-31500L** FURNISH ADJUSTABLE 3 SECTION 1-WAY, DIE CAST ALUMINUM TRAFFIC SIGNALS 12" - W/LED LENS	42.00	EACH				
178	**T-31501AA** FURNISH 12" AMBER ARROW LED (AS PER NYC SPEC)	4.00	EACH				

NEW YORK CITY DEPARTMENT OF DESIGN AND CONSTRUCTION
DIVISION OF INFRASTRUCTURE - BUREAU OF DESIGN

PROJECT ID: HWXP136B
CONTRACT PIN: 8502016HW0061C

BID SCHEDULE FORM

COL. 1 SEQ. NO	COL. 2 ITEM NUMBER and DESCRIPTION	COL. 3 ENGINEER'S ESTIMATE OF QUANTITIY	COL. 4 UNIT	COL. 5 UNIT PRICE (*IN FIGURES) DOLLARS	CTS	COL. 6 EXTENDED AMOUNT (IN FIGURES.) DOLLARS	CTS
179	**T-31501GA** FURNISH 12 INCH GREEN ARROW LED (AS PER NYC SPECIFICATION)	4.00	EACH				
180	**T-33000L** FURNISH POLYCARBONATE INCANDESCENT PED SIGNAL W/LED LENS	14.00	EACH				
181	**T-33001-L** FURNISH POLYCARBONATE PEDESTRIAN SIGNAL (16 X 16) W/LED COUNT LENS (SPECIFICATION A-L)	42.00	EACH				
182	**T-4.22** INSTALL ANY TYPE OF ADVANCED SOLID STATE TRAFFIC SIGNAL CONTROLLER AND CABINET ON METAL POLE	4.00	EACH				
183	**T-4.8** REMOVE ONE CONTROL BOX AND CONTROLLER FROM ANY POST OR SUPPORT	3.00	EACH				
184	**T-5.17** FURNISH AND INSTALL 2" RIGID CONDUIT ON A POST	80.00	L.F.				

NEW YORK CITY DEPARTMENT OF DESIGN AND CONSTRUCTION
DIVISION OF INFRASTRUCTURE - BUREAU OF DESIGN

PROJECT ID: HWXP136B
CONTRACT PIN: 8502016HW0061C

BID SCHEDULE FORM

COL. 1 SEQ. NO	COL. 2 ITEM NUMBER and DESCRIPTION	COL. 3 ENGINEER'S ESTIMATE OF QUANTITIY	COL. 4 UNIT	COL. 5 UNIT PRICE (IN FIGURES) DOLLARS	CTS	COL. 6 EXTENDED AMOUNT (IN FIGURES) DOLLARS	CTS
185	T-5.32 RESTORING PERMANENT ROADWAY (INCLUDING SAWCUT)	50.00	L.F.				
186	T-5.50 FURNISH AND INSTALL 2" HDPE UNDERGROUND CONDUIT IN PAVED ROADWAY	50.00	L.F.				
187	T-5.52 FURNISH AND INSTALL 2" HDPE UNDERGROUND CONDUIT IN UNPAVED AREA	6,000.00	L.F.				
188	T-6.1 INSTALL CABLE (INCLUDES OVERHEAD)	1,500.00	L.F.				
189	T-6.10 REMOVE CABLE (INCLUDES OVERHEAD)	3,000.00	L.F.				
190	T-6.2 INSTALL MULTIPLE CABLE (INCLUDES OVERHEAD)	4,000.00	L.F.				

NEW YORK CITY DEPARTMENT OF DESIGN AND CONSTRUCTION
DIVISION OF INFRASTRUCTURE - BUREAU OF DESIGN

PROJECT ID: HWXP136B
CONTRACT PIN: 8502016HW0061C

BID SCHEDULE FORM

COL. 1 SEQ. NO	COL. 2 ITEM NUMBER and DESCRIPTION	COL. 3 ENGINEER'S ESTIMATE OF QUANTITIY	COL. 4 UNIT	COL. 5 UNIT PRICE (IN FIGURES) DOLLARS	CTS	COL. 6 EXTENDED AMOUNT (IN FIGURES) DOLLARS	CTS
191	**T-60000B** FURNISH 2 c # 10B (BREAKDOWN = 2#10 WITH 3RD WIRE FOR GROUNDING).	4,000.00	L.F.				
192	**T-60040** c) 7 CONDUCTOR, 14 A.W.G.	2,000.00	L.F.				
193	**T-60190** e) 13 CONDUCTOR, 14 A.W.G.	5,000.00	L.F.				
194	**T-7.53** REMOVE (2418) HAND BOX OR PULL BOX IN PAVED SIDEWALK	5.00	EACH				
195	**T-7.68** FURNISH AND INSTALL (2448) HANDBOX OR PULL BOX IN PAVED SIDEWALK	14.00	EACH				
196	**T-79999** FURNISH ADVANCED SOLID STATE TRF CONTROLLER (6 LOAD SWITCH).	1.00	EACH				

NEW YORK CITY DEPARTMENT OF DESIGN AND CONSTRUCTION
DIVISION OF INFRASTRUCTURE - BUREAU OF DESIGN

PROJECT ID: HWXP136B
CONTRACT PIN: 8502016HW0061C

BID SCHEDULE FORM

COL. 1 SEQ. NO	COL. 2 ITEM NUMBER and DESCRIPTION	COL. 3 ENGINEER'S ESTIMATE OF QUANTITIY	COL. 4 UNIT	COL. 5 UNIT PRICE (IN FIGURES) DOLLARS	CTS	COL. 6 EXTENDED AMOUNT (IN FIGURES) DOLLARS	CTS
197	T-8.10 RELOCATE CONCRETE PYLON WITH POST	14.00	EACH				
198	T-8.8 INSTALL CONCRETE PYLON	14.00	EACH				
199	T-8.9 REMOVE CONCRETE PYLON	14.00	EACH				
200	T-81000 FURNISH CONCRETE PYLON	14.00	EACH				
201	UTL-6.01.1 GAS MAIN CROSSING SEWER UP TO 24" IN DIAMETER (S6.01) **Unit price bid shall not be less than: $ 1,040.00**	8.00	EACH				
202	UTL-6.01.9 GAS MAIN CROSSING WATER MAIN UP TO 20" IN DIAMETER (S6.01) **Unit price bid shall not be less than: $ 485.00**	1.00	EACH				

NEW YORK CITY DEPARTMENT OF DESIGN AND CONSTRUCTION
DIVISION OF INFRASTRUCTURE - BUREAU OF DESIGN

PROJECT ID: HWXP136B
CONTRACT PIN: 8502016HW0061C

BID SCHEDULE FORM

COL. 1 SEQ. NO	COL. 2 ITEM NUMBER and DESCRIPTION	COL. 3 ENGINEER'S ESTIMATE OF QUANTITIY	COL. 4 UNIT	COL. 5 UNIT PRICE (IN FIGURES) DOLLARS	CTS	COL. 6 EXTENDED AMOUNT (IN FIGURES) DOLLARS	CTS
203	**UTL-6.06** SPECIAL CARE EXCAVATION AND BACKFILLING (S6.06) **Unit price bid shall not be less than: $ 180.00**	20.00	C.Y.				
204	**UTL-6.07** TEST PITS FOR GAS FACILITIES (S6.07) **Unit price bid shall not be less than: $ 100.00**	27.00	C.Y.				
205	**UTL-GCS-2WS** GAS INTERFERENCES AND ACCOMMODATIONS **PRICE BID SHALL BE FOR THE FIXED SUM OF $ 15,000.00**	1.00	F.S.	15,000	00	$15,000	00

SUB-TOTAL: $ _____

206	**6.39 A** MOBILIZATION **BID PRICE OF MOBILIZATION SHALL NOT EXCEED 4% OF THE ABOVE SUB-TOTAL PRICE.**	1.00	L.S.				

NEW YORK CITY DEPARTMENT OF DESIGN AND CONSTRUCTION
DIVISION OF INFRASTRUCTURE - BUREAU OF DESIGN

PROJECT ID: HWXP136B
CONTRACT PIN: 8502016HW0061C

BID SCHEDULE FORM

COL. 1	COL. 2	COL. 3	COL. 4	COL. 5		COL. 6	
		ENGINEER'S ESTIMATE		UNIT PRICE (IN FIGURES)		EXTENDED AMOUNT (IN FIGURES)	
SEQ. NO	ITEM NUMBER and DESCRIPTION	OF QUANTITIY	UNIT	DOLLARS	CTS	DOLLARS	CTS

TOTAL BID PRICE: $ _____

PLEASE BE SURE A LEGIBLE BID IS ENTERED FOR EACH ITEM.
THE BIDDER SHALL INSERT THE TOTAL BID PRICE IN
THE BID FORM ON PAGE C-4 OF THIS BID BOOKLET.

BID FORM
THE CITY OF NEW YORK
DEPARTMENT OF DESIGN AND CONSTRUCTION
DIVISION OF INFRASTRUCTURE

BID FOR FURNISHING ALL LABOR AND MATERIAL NECESSARY AND REQUIRED FOR:

PROJECT ID: HWXP136B

RECONSTRUCTION OF GRAND CONCOURSE SERVICE ROADS, RESURFACING OF THE MAIN ROADWAY AND WIDENING OF MEDIANS FROM EAST 171ST STREET TO EAST 175TH STREET

INCLUDING SEWER, WATER MAIN, STREET LIGHTING, AND TRAFFIC SIGNAL WORK

Together With All Work Incidental Thereto

BOROUGH OF THE BRONX
CITY OF NEW YORK

Name of Bidder: _____

Date of Bid Opening: _____

Bidder is: (Check one, whichever applies) Individual ( ) Partnership ( ) Corporation ( )

Place of Business of Bidder: _____

Bidder's Telephone Number: _____ Fax Number: _____

Bidder's E-Mail Address: _____

Residence of Bidder (If Individual): _____

If Bidder is a Partnership, fill in the following blanks:

Names of Partners	Residence of Partners
_____	_____
_____	_____
_____	_____

If Bidder is a Corporation, fill in the following blanks:
Organized under the laws of the State of _____

Name and Home Address of President: _____

_____

Name and Home Address of Secretary: _____

_____

Name and Home Address of Treasurer: _____

_____

BID FORM

The above-named Bidder affirms and declares:

1. The said bidder is of lawful age and the only one interested in this bid; and no person, firm or corporation other than hereinbefore named has any interest in this bid, or in the Contract proposed to be taken.

2. By submission of this bid, each bidder and each person signing on behalf of any bidder certifies, and in the case of a joint bid each party thereto certifies as to its own organization, under penalty of perjury, that to the best of its knowledge and belief: (1) the prices in this bid have been arrived at independently without collusion, consultation, communication or agreement, for the purpose of restricting competition, as to any matter relating to such prices with any other bidder or with any competitor; (2) unless otherwise required by law, the prices quoted in this bid have not been knowingly disclosed by the bidder and will not knowingly be disclosed by the bidder prior to opening, directly or indirectly, to any other bidder or to any competitor; and (3) No attempt has been made or will be made by the bidder to induce any other person, partnership or corporation to submit or not to submit a bid for the purpose of restricting competition.

3. No councilman or other officer or employee or person whose salary is payable in whole or in part from the City Treasury is directly or indirectly interested in this bid, or in the supplies, materials, equipment, work or labor to which it relates, or in any of the profits thereof.

4. The bidder is not in arrears to the City of New York upon debt or contract or taxes, and is not a defaulter, as surety or otherwise, upon any obligation of the City of New York, and has not been declared not responsible, or disqualified, by any agency of the City of New York or State of New York, nor is there any proceeding pending relating to the responsibility or qualification of the bidder to receive public contracts except as set forth on the Affirmation included as page C-6 of this Bid Booklet.

The bidder hereby affirms that it has paid all applicable City income, excise and other taxes for all years it has conducted business activities in New York City.

5. The bidder, as an individual, or as a member, partner, director or officer of the bidder, if the same be a firm, partnership or corporation, executes this document expressly warranting and representing that should this bid be accepted by the City and the Contract awarded to him, he and his subcontractors engaged in the performance: (1) will comply with the provisions of Section 6-108 of the Administrative Code of the City of New York and the non-discrimination provisions of Section 220a of the New York State Labor Law, as more expressly and in detail set forth in the Agreement; (2) will comply with Section 6-109 of the Administrative Code of the City of New York in relation to minimum wages and other stipulations as more expressly and in detail set forth in the Agreement; (3) have complied with the provisions of the aforesaid laws since their respective effective dates, and (4) will post notices to be furnished by the City, setting forth the requirements of the aforesaid laws in prominent and conspicuous places in each and every plant, factory, building and structure where employees engaged in the performance of the Contract can readily view it, and will continue to keep such notices posted until the supplies, materials and equipment, or work labor and services required to be furnished or rendered by the Contractor have been finally accepted by the City. In the event of any breach or violation of the foregoing, the Contractor may be subject to damages, liquidated or otherwise, cancellation of the Contract and suspension as a bidder for a period of three years. (The words, "the bidder", "he", "his", and "him" where used herein shall mean the individual bidder, firm, partnership or corporation executing this bid).

6. Compliance Report

The bidder, as an individual, or as a member, partner, director, or officer of the bidder, if the same be a firm, partnership, or corporation, (1) represents that his attention has been specifically drawn to Executive Order No. 50, dated, April 25, 1980, on Equal Employment Compliance of the contract, and (2) warrants that he will comply with the provisions of Executive Order No. 50. The Employment Report must be submitted as part of the bid.

The bidder, as an individual, or as a member, partner, director, or officer of the bidder, if the same be a firm, partnership, or corporation, executes this document expressly warranting that he will comply with: (1) the provision of the contract on providing records, Chapter 8.

7. By submission of this bid, the bidder certifies that it now has and will continue to have the financial capability to fully perform the work required for this contract. Any award of this contract will be made in reliance upon such certification. Upon request therefor, the bidder will submit written verification of such financial capability in a form that is acceptable to the department.

8. In accordance with Section 165 of the State Finance Law, the bidder agrees that tropical hardwoods, as defined in Section 165 of the State Finance Law, shall not be utilized in the performance of this Contract, except as the same are permitted by the foregoing provision of law.

9. The bidder has visited and examined the site of the work and has carefully examined the Contract in the form approved by the Corporation Counsel, and will execute the Contract and perform all its items, covenants and conditions, and will provide, furnish and deliver all the work, materials, supplies, tools and appliances for all labor and materials necessary or required for the hereinafter named work, all in strict conformity with the Contract, for the prices set forth in the Bid Schedule:

10. M/WBE UTILIZATION PLAN: By signing its bid, the bidder agrees to the Vendor Certification and Required Affirmations set forth below, unless a full waiver of the Participation Goals is granted. The Vendor Certification and Required Affirmations will be deemed to satisfy the requirement to complete Section V of Part II of Schedule B: M/WBE Utilization Plan.

Section V: Vendor Certification and Required Affirmations:

I hereby:

1) acknowledge my understanding of the M/WBE participation requirements as set forth in this Contract and the pertinent provisions of Section 6-129 of the Administrative Code of the City of New York and the rules promulgated thereunder;
2) affirm that the information supplied in support of the M/WBE Utilization Plan is true and correct;
3) agree, if awarded this Contract, to comply with the M/WBE participation requirements of this Contract, the pertinent provisions of Section 6-129, and the rules promulgated thereunder, all of which shall be deemed to be material terms of this Contract;
4) agree and affirm that it is a material term of this Contract that the Vendor will award the total dollar value of the M/WBE Participation Goals to certified MBEs and/or WBEs, unless a full waiver is obtained or such goals are modified by the Agency; and
5) agree and affirm, if awarded this Contract, to make all reasonable, good faith efforts to meet the M/WBE Participation Goals, or If a partial waiver is obtained or such goals are modified by the Agency, to meet the modified Participation Goals by soliciting and obtaining the participation of certified MBE and/or WBE firms.

(NO TEXT ON THIS PAGE)

BID FORM

PROJECT ID. HWXP136B

TOTAL BID PRICE: In the space provided below, the Bidder shall indicate its Total Bid Price in figures. Such Total Bid Price is set forth on the final page of the Bid Schedule.

TOTAL BID PRICE:
(a/k/a BID PROPOSAL) $_____

BIDDER'S SIGNATURE AND AFFIDAVIT

Bidder:_____

By: _____
(Signature of Partner or corporate officer)

_____

Attest: Secretary of Corporate Bidder
(Corporate Seal)

Affidavit on the following page should be subscribed
and sworn to before a Notary Public

BID FORM (TO BE NOTARIZED)

AFFIDAVIT WHERE BIDDER IS AN INDIVIDUAL

STATE OF NEW YORK, COUNTY OF_____ ss:

_____ being duly sworn says:

I am the person described in and who executed the foregoing bid, and the several matters therein stated are in all respects true.

_____

(Signature of the person who signed the Bid)

Subscribed and sworn to before me this

_____ day of_____, _____

_____

Notary Public

AFFIDAVIT WHERE BIDDER IS A PARTNERSHIP

STATE OF NEW YORK, COUNTY OF_____ ss:

_____ being duly sworn says:

I am a member of _____ the firm described in and which executed the foregoing bid. I subscribed the name of the firm thereto on behalf of the firm, and the several matters therein stated are in all respects true.

_____

(Signature of Partner who signed the Bid)

Subscribed and sworn to before me this

_____ day of_____, _____

_____

Notary Public

AFFIDAVIT WHERE BIDDER IS A CORPORATION

STATE OF NEW YORK, COUNTY OF_____ ss:

_____ being duly sworn says:

I am the _____ of the above named corporation whose name is subscribed to and which executed the foregoing bid. I reside at _____.

I have knowledge of the several matters therein stated, and they are in all respects true.

_____

(Signature of Corporate Officer who signed the Bid)

Subscribed and sworn to before me this

_____ day of_____, _____

_____

Notary Public

AFFIRMATION

PROJECT ID. HWXP136B

The undersigned bidder affirms and declares that said bidder is not in arrears to the City of New York upon debt, contract or taxes and is not a defaulter, as surety or otherwise, upon obligation to the City of New York, and has not been declared not responsible, or disqualified, by any agency of the City of New York, nor is there any proceeding pending relating to the responsibility or qualification of the bidder to receive public contracts except: _____

_____

(If none, the bidder shall insert the word "None" in the space provided above.)

Full Name of Bidder: _____

Address: _____

City _____ State _____ Zip Code _____

CHECK ONE BOX AND INCLUDE APPROPRIATE NUMBER:

/__/ A - Individual or Sole Proprietorship*
SOCIAL SECURITY NUMBER

- - - - - - - - - - - -

/__/ B - Partnership, Joint Venture or other unincorporated organization
EMPLOYER IDENTIFICATION NUMBER

- - - - - - - - - - - -

/__/ C- Corporation
EMPLOYER IDENTIFICATION NUMBER

- - - - - - - - - - - -

By:_____
Signature

Title:_____

If a corporation, place seal here

This affirmation must be signed by an officer or duly authorized representative.

*Under the Federal Privacy Act the furnishing of Social Security Numbers by bidders on City contracts is voluntary. Failure to provide a Social Security Number will not result in a bidder's disqualification. Social Security Numbers will be used to identify bidders, proposers or vendors to ensure their compliance with laws, to assist the City in enforcement of laws, as well as to provide the City a means of identifying of businesses which seek City contracts.

(NO TEXT ON THIS PAGE)

BID BOND 1
FORM OF BID BOND

KNOW ALL MEN BY THESE PRESENTS. That we,_____
_____
_____

hereinafter referred to as the "Principal", and _____
_____
_____

hereinafter referred to as the "Surety" are held and firmly bound to THE CITY OF NEW YORK, hereinafter referred to as the "CITY", or to its successors and assigns in the penal sum of _____

_____

($_____), Dollars lawful money of the United States, for the payment of which said sum of money well and truly to be made, we, and each of us, bind ourselves, our heirs, executors, administrators, successors and assigns, jointly and severally, firmly by these presents.

Whereas, the Principal is about to submit (or has submitted) to the City the accompanying proposal, hereby made a part hereof, to enter into a contract in writing for _____

_____

_____

NOW, THEREFORE, the conditions of this obligation are such that if the Principal shall not withdraw said Proposal without the consent of the City for a period of forty-five (45) days after the opening of bids and in the event of acceptance of the Principal's Proposal by the City, if the Principal shall:

(a) Within ten (10) days after notification by the City, execute in quadruplicate and deliver to the City all the executed counterparts of the Contract in the form set forth in the Contract Documents, in accordance with the proposal as accepted, and

(b) Furnish a performance bond and separate payment bond, as may be required by the City, for the faithful performance and proper fulfillment of such Contract, which bonds shall be satisfactory in all respects to the City and shall be executed by good and sufficient sureties, and

(c) In all respects perform the agreement created by the acceptance of said Proposal as provided in the Information for Bidders, bound herewith and made a part hereof, or if the City shall reject the aforesaid Proposal, then this obligation shall be null and void; otherwise to remain in full force and effect.

BID BOND 2

In the event that the Proposal of the Principal shall be accepted and the Contract be awarded to him the Surety hereunder agrees subject only to the payment by the Principal of the premium therefore, if requested by the City, to write the aforementioned performance and payment bonds in the form set forth in the Contract Documents.

It is expressly understood and agreed that the liability of the Surety for any and all claims hereunder shall in no event exceed the penal amount of this obligation as herein stated.

There shall be no liability under this bond if, in the event of the acceptance of the Principal's Proposal by the City, either a performance bond or payment bond, or both, shall not be required by the City on or before the 30th day after the date on which the City signs the Contract.

The surety, for the value received, hereby stipulates and agrees that the obligations of the Surety and its bond shall in no way be impaired or affected by any postponements of the date upon which the City will receive or open bids, or by any extensions of the time within which the City may accept the Principal's Proposal, or by any waiver by the City of any of the requirements of the Information for Bidders, and the Surety hereby waives notice of any such postponements, extensions, or waivers.

IN WITNESS WHEREOF, the Principal and the Surety have hereunto set their hands and seals and such of them as are corporations have caused their corporate seals to be hereto affixed and these presents to be signed by their proper officers the _____ day of _____, _____.

(Seal) _____(L.S.)
Principal

By: _____

(Seal) _____
Surety

By: _____

BID BOND 3

ACKNOWLEDGMENT OF PRINCIPAL, IF A CORPORATION

State of _____ County of _____ ss:
On this _____ day of _____, _____, before me personally came _____ to me known, who, being by me duly sworn, did depose and say that he resides at _____ that he is the _____ of _____ the corporation described in and which executed the foregoing instrument; that he knows the seal of said corporation; that one of the seals affixed to said instrument is such seal; that it was so affixed by order of the directors of said corporation, and that he signed his name thereto by like order.

_____
Notary Public

ACKNOWLEDGMENT OF PRINCIPAL, IF A PARTNERSHIP

State of _____ County of _____ ss:
On this _____ day of _____, _____, before me personally appeared _____ to me known and known to me to be one of the members of the firm of _____ described in and who executed the foregoing instrument, and he acknowledged to me that he executed the same as and for the act and deed of said firm.

_____
Notary Public

ACKNOWLEDGMENT OF PRINCIPAL, IF AN INDIVIDUAL

State of _____ County of _____ ss:
On this _____ day of _____, _____, before me personally appeared _____ to me known and known to me to be the person described in and who executed the foregoing instrument and acknowledged that he executed the same.

_____
Notary Public

AFFIX ACKNOWLEDGMENTS AND JUSTIFICATION OF SURETIES

(NO TEXT ON THIS PAGE)

M/WBE PROGRAM

M/WBE UTILIZATION PLAN

M/WBE Program Requirements: The requirements for the M/WBE Program are set forth on the following pages of this Bid Booklet, in the section entitled "Notice to All Prospective Contractors".

Schedule B: M/WBE Utilization Plan: Schedule B: M/WBE Utilization Plan for this Contract is set forth in this Bid Booklet on the pages following the section entitled "Notice to All Prospective Contractors". The M/WBE Utilization Plan (Part I) indicates whether Participation Goals have been established for this Contract. If Participation Goals have been established for this Contract, the bidder must submit an M/WBE Utilization Plan (Part II) with its bid.

Waiver: The bidder may seek a full or partial pre-award waiver of the Participation Goals in accordance with the "Notice to All Prospective Contractors" (See Part A, Section 10). The bidder's request for a waiver must be submitted at least seven (7) calendar days prior to the bid date. Waiver requests submitted after the deadline will not be considered. The form for requesting a waiver of the Participation Goals is set forth in the M/WBE Utilization Plan (Part III).

Rejection of the Bid: The bidder must complete Schedule B: M/WBE Utilization Plan (Part II) set forth in this Bid Booklet on the pages following the section entitled "Notice to All Prospective Contractors". A Schedule B submitted by the bidder which does not include the Vendor Certification and Required Affirmations (See Section V of Part II) will be deemed to be non-responsive, unless a full waiver of the Participation Goals is granted (Schedule B, Part III). In the event that the City determines that the bidder has submitted a Schedule B where the Vendor Certification and Required Affirmations are completed but other aspects of the Schedule B are not complete, or contain a copy or computation error that is at odds with the Vendor Certification and Required Affirmations, the bidder will be notified by the Agency and will be given four (4) calendar days from receipt of notification to cure the specified deficiencies and return a completed Schedule B to the Agency. Failure to do so will result in a determination that the Bid is non-responsive. Receipt of notification is defined as the date notice is emailed or faxed (if the bidder has provided an email address or fax number), or no later than five (5) calendar days from the date of mailing or upon delivery, if delivered.

Impact on LBE Requirements: If Participation Goals have been established for the participation of M/WBEs, the contractor is not required to comply with the Locally Based Enterprise Program ("LBE"). The LBE Program is set forth in Article 67 of the Contract.

NOTICE TO ALL PROSPECTIVE CONTRACTORS

PARTICIPATION BY MINORITY-OWNED AND WOMEN-OWNED BUSINESS ENTERPRISES IN CITY PROCUREMENT

ARTICLE I. M/WBE PROGRAM

Local Law No. 129 of 2005 added and Local Law 1 of 2013 amended Section 6-129 of the Administrative Code of the City of New York (hereinafter "Section 6-129"). Section 6-129 establishes the program for participation in City procurement ("M/WBE Program") by minority- owned business enterprises ("MBEs") and women-owned business enterprises ("WBEs"), certified in accordance with Section 1304 of the New York City Charter. As stated in Section 6-129, the intent of the program is to address the impact of discrimination on the City's procurement process, and to promote the public interest in avoiding fraud and favoritism in the procurement process, increasing competition for City business, and lowering contract costs. The contract provisions contained herein are pursuant to Section 6-129, and the rules of the Department of Small Business Services ("DSBS") promulgated thereunder.

If this Contract is subject to the M/WBE Program established by Section 6-129, the specific requirements of MBE and/or WBE participation for this Contract are set forth in Schedule B of the Contract (entitled the "M/WBE Utilization Plan"), and are detailed below. The Contractor must comply with all applicable MBE and WBE requirements for this Contract.

All provisions of Section 6-129 are hereby incorporated in the Contract by reference and all terms used herein that are not defined herein shall have the meanings given such terms in Section 6-129. Article I, Part A, below, sets forth provisions related to the participation goals for construction, standard and professional services contracts. Article I, Part B, below, sets forth miscellaneous provisions related to the M/WBE Program.

PART A

PARTICIPATION GOALS FOR CONSTRUCTION, STANDARD AND PROFESSIONAL SERVICES CONTRACTS OR TASK ORDERS

1. The **MBE and/or WBE Participation Goals** established for this Contract or Task Orders issued pursuant to this Contract, ("**Participation Goals**"), as applicable, are set forth on Schedule B, Part I to this Contract (see Page 1, line 1 Total Participation Goals) or will be set forth on Schedule B, Part I to Task Orders issued pursuant to this Contract, as applicable.

The **Participation Goals** represent a percentage of the total dollar value of the Contract or Task Order, as applicable, that may be achieved by awarding subcontracts to firms certified with New York City Department of Small Business Services as MBEs and/or WBEs, and/or by crediting the participation of prime contractors and/or qualified joint ventures as provided in Section 3 below, unless the goals have been waived or modified by Agency in accordance with Section 6-129 and Part A, Sections 10 and 11 below, respectively.

2. If **Participation Goals** have been established for this Contract or Task Orders issued pursuant to this Contract, Contractor agrees or shall agree as a material term of the Contract that Contractor shall be subject to the **Participation Goals**, unless the goals are waived or modified by Agency in accordance with Section 6-129 and Part A, Sections 10 and 11 below, respectively.

3. If **Participation Goals** have been established for this Contract or Task Order issued pursuant to this Contract, a Contractor that is an MBE and/or WBE shall be permitted to count its own participation toward fulfillment of the relevant **Participation Goal**, provided that in accordance with Section 6-129 the value of Contractor's participation shall be determined by subtracting from the total value of the Contract or Task Order, as applicable, any amounts that the Contractor pays to direct subcontractors (as defined in Section 6-129(c)(13)), and provided further that a Contractor that is certified as both an MBE and a WBE may count its own participation either toward the goal for MBEs or the goal for WBEs, but not both.

A Contractor that is a qualified joint venture (as defined in Section 6-129(c)(30)) shall be permitted to count a percentage of its own participation toward fulfillment of the relevant **Participation Goal**. In accordance with Section 6-129, the value of Contractor's participation shall be determined by subtracting from the total value of the Contract or Task Order, as applicable, any amounts that Contractor pays to direct subcontractors, and then multiplying the remainder by the percentage to be applied to total profit to determine the amount to which an MBE or WBE is entitled pursuant to the joint venture agreement, provided that where a participant in a joint venture is certified as both an MBE and a WBE, such amount shall be counted either toward the goal for MBEs or the goal for WBEs, but not both.

4. A. If **Participation Goals** have been established for this Contract, a prospective contractor shall be required to submit with its bid or proposal, as applicable, a completed Schedule B, M/WBE Utilization Plan, Part II (see Pages 2-4) indicating: (a) whether the contractor is an MBE or WBE, or qualified joint venture; (b) the percentage of work it intends to award to direct subcontractors; and (c) in cases where the contractor intends to award direct subcontracts, a description of the type and dollar value of work designated for participation by MBEs and/or WBEs, and the time frames in which such work is scheduled to begin and end. In the event that this M/WBE Utilization Plan indicates that the bidder or proposer, as applicable, does not intend to meet the **Participation Goals**, the bid or proposal, as applicable, shall be deemed non-responsive, unless Agency has granted the bidder or proposer, as applicable, a pre- award waiver of the Participation Goals in accordance with Section 6-129 and Part A, Section 10 below.

B. (i) If this Contract is for a master services agreement or other requirements type contract that will result in the issuance of Task Orders that will be individually registered ("Master Services Agreement") and is subject to M/WBE **Participation Goals**, a prospective contractor shall be required to submit with its bid or proposal, as applicable, a completed Schedule B, M/WBE Participation Requirements for Master Services Agreements That Will Require Individually Registered Task Orders, Part II (page 2) indicating the prospective contractor's certification and required affirmations to make all reasonable good faith efforts to meet participation goals established on each individual Task Order issued pursuant to this Contract, or if a partial waiver is obtained or such goals are modified by the Agency, to meet the modified **Participation Goals** by soliciting and obtaining the participation of certified MBE and/or WBE firms. In the event that the Schedule B indicates that the bidder or proposer, as applicable, does not intend to meet the **Participation Goals** that may be established on Task Orders issued pursuant to this Contract, the bid or proposal, as applicable, shall be deemed nonresponsive.

(ii) **Participation Goals** on a Master Services Agreement will be established for individual Task Orders issued after the Master Services Agreement is awarded. If **Participation Goals** have been established on a Task Order, a contractor shall be required to submit a Schedule B – M/WBE Utilization Plan For Independently Registered Task Orders That Are Issued Pursuant to Master Services Agreements, Part II (see Pages 2-4) indicating: (a) whether the contractor is an MBE or WBE, or qualified joint venture; (b) the percentage of work it intends to award to direct subcontractors; and (c) in cases where the contractor intends to award direct subcontracts, a description of the type and dollar value of work designated for participation by MBEs and/or WBEs, and the time frames in which such work is scheduled to begin and end. The contractor must engage in good faith efforts to meet the **Participation Goals** as established for the Task Order unless Agency has granted the contractor a pre-award waiver of the Participation Goals in accordance with Section 6-129 and Part A, Section 10 below.

C. THE BIDDER/PROPOSER MUST COMPLETE THE SCHEDULE B INCLUDED HEREIN (SCHEDULE B, PART II). A SCHEDULE B SUBMITTED BY THE BIDDER/PROPOSER WHICH DOES NOT INCLUDE THE VENDOR CERTIFICATION AND REQUIRED AFFIRMATIONS (SEE SECTION V OF PART II) WILL BE DEEMED TO BE NON-RESPONSIVE, UNLESS A FULL WAIVER OF THE PARTICIPATION GOALS IS GRANTED (SCHEDULE B, PART III). IN THE EVENT THAT THE CITY DETERMINES THAT THE BIDDER/PROPOSER HAS SUBMITTED A SCHEDULE B WHERE THE VENDOR CERTIFICATION AND REQUIRED AFFIRMATIONS ARE COMPLETED BUT OTHER ASPECTS OF THE SCHEDULE B ARE NOT COMPLETE, OR CONTAIN A COPY OR COMPUTATION ERROR THAT IS AT ODDS WITH THE VENDOR CERTIFICATION AND AFFIRMATIONS, THE BIDDER/PROPOSER WILL BE NOTIFIED BY THE AGENCY AND WILL BE GIVEN FOUR (4) CALENDAR DAYS FROM RECEIPT OF NOTIFICATION TO CURE THE SPECIFIED DEFICIENCIES AND RETURN A COMPLETED SCHEDULE B TO THE AGENCY. FAILURE TO DO

SO WILL RESULT IN A DETERMINATION THAT THE BID/PROPOSAL IS NON-RESPONSIVE. RECEIPT OF NOTIFICATION IS DEFINED AS THE DATE NOTICE IS E-MAILED OR FAXED (IF THE BIDDER/PROPOSER HAS PROVIDED AN E-MAIL ADDRESS OR FAX NUMBER), OR NO LATER THAN FIVE (5) CALENDAR DAYS FROM THE DATE OF MAILING OR UPON DELIVERY, IF DELIVERED.

5. Where an **M/WBE** Utilization Plan has been submitted, the Contractor shall, within 30 days of issuance by Agency of a notice to proceed, submit a list of proposed persons or entities to which it intends to award subcontracts within the subsequent 12 months. In the case of multiyear contracts, such list shall also be submitted every year thereafter. The Agency may also require the Contractor to report periodically about the contracts awarded by its direct subcontractors to indirect subcontractors (as defined in Section 6-129(c)(22)). **PLEASE NOTE: If this Contract is a public works project subject to GML §101(5) (i.e., a contract valued at or below $3M for projects in New York City) or if the Contract is subject to a project labor agreement in accordance with Labor Law §222, and the bidder is required to identify at the time of bid submission its intended subcontractors for the Wicks trades (plumbing and gas fitting; steam heating, hot water heating, ventilating and air conditioning (HVAC); and electric wiring), the Contractor must identify all those to which it intends to award construction subcontracts for any portion of the Wicks trade work at the time of bid submission, regardless of what point in the life of the contract such subcontracts will occur. In identifying intended subcontractors in the bid submission, bidders may satisfy any Participation Goals established for this Contract by proposing one or more subcontractors that are MBEs and/or WBEs for any portion of the Wicks trade work.** In the event that the Contractor's selection of a subcontractor is disapproved, the Contractor shall have a reasonable time to propose alternate subcontractors.

6. MBE and WBE firms must be certified by DSBS in order for the Contractor to credit such firms' participation toward the attainment of the **Participation Goals**. Such certification must occur prior to the firms' commencement of work. A list of MBE and WBE firms may be obtained from the DSBS website at www.nyc.gov/buycertified, by emailing DSBS at buyer@sbs.nyc.gov, by calling (212) 513-6356, or by visiting or writing DSBS at 110 William St., New York, New York, 10038, 7th floor. Eligible firms that have not yet been certified may contact DSBS in order to seek certification by visiting www.nyc.gov/getcertified, emailing MWBE@sbs.nyc.gov, or calling the DSBS certification helpline at (212) 513-6311. A firm that is certified as both an MBE and a WBE may be counted either toward the goal for MBEs or the goal for WBEs, but not both. No credit shall be given for participation by a graduate MBE or graduate WBE, as defined in Section 6-129(c)(20).

7. Where an **M/WBE** Utilization Plan has been submitted, the Contractor shall, with each voucher for payment, and/or periodically as Agency may require, submit statements, certified under penalty of perjury, which shall include, but not be limited to,: the total amount the Contractor paid to its direct subcontractors, and, where applicable pursuant to Section 6-129(j), the total amount direct subcontractors paid to indirect subcontractors; the names, addresses and contact numbers of each MBE or WBE hired as a subcontractor by the Contractor, and, where applicable, hired by any of the Contractor's direct subcontractors; and the dates and amounts paid to each MBE or WBE. The Contractor shall also submit, along with its voucher for final payment: the total amount it paid to subcontractors, and, where applicable pursuant to Section 6-129(j), the total amount its direct subcontractors paid directly to their indirect subcontractors; and a final list, certified under penalty of perjury, which shall include the name, address and contact information of each subcontractor that is an MBE or WBE, the work performed by, and the dates and amounts paid to each.

8. If payments made to, or work performed by, MBEs or WBEs are less than the amount specified in the Contractor's **M/WBE** Utilization Plan, Agency shall take appropriate action, in accordance with Section 6-129 and Article II below, unless the Contractor has obtained a modification of its **M/WBE** Utilization Plan in accordance with Section 6-129 and Part A, Section 11 below.

9. Where an **M/WBE** Utilization Plan has been submitted, and the Contractor requests a change order the value of which exceeds the greater of 10 percent of the Contract or Task Order, as applicable, or $500,000, Agency shall review the scope of work for the Contract or Task Order, as applicable, and the scale and types of work involved in the change order, and determine whether the **Participation Goals** should be modified.

10. Pre-award waiver of the **Participation Goals**. (a) A bidder or proposer, or contractor with respect to a Task Order, may seek a pre-award full or partial waiver of the **Participation Goals** in accordance with Section 6-129, which requests that Agency change one or more **Participation Goals** on the grounds that the **Participation Goals** are unreasonable in light of the availability of certified firms to perform the services required, or by demonstrating that it has legitimate business reasons for proposing a lower level of subcontracting in its M/WBE Utilization Plan.

(b) To apply for a full or partial waiver of the **Participation Goals**, a bidder, proposer, or contractor, as applicable, must complete Part III (Page 5) of Schedule B and submit such request no later than seven (7) calendar days prior to the date and time the bids, proposals, or Task Orders are due, in writing to the Agency by email at zhangji@ddc.nyc.gov or via facsimile at (718) 391-1886. Bidders, proposers, or contractors, as applicable, who have submitted requests will receive an Agency response by no later than two (2) calendar days prior to the due date for bids, proposals, or Task Orders; provided, however, that if that date would fall on a weekend or holiday, an Agency response will be provided by close-of-business on the business day before such weekend or holiday date.

(c) If the Agency determines that the **Participation Goals** are unreasonable in light of the availability of certified firms to perform the services required, it shall revise the solicitation and extend the deadline for bids and proposals, or revise the Task Order, as applicable.

(d) Agency may grant a full or partial waiver of the **Participation Goals** to a bidder, proposer or contractor, as applicable, who demonstrates—before submission of the bid, proposal or Task Order, as applicable—that it has legitimate business reasons for proposing the level of subcontracting in its **M/WBE** Utilization Plan. In making its determination, Agency shall consider factors that shall include, but not be limited to, whether the bidder, proposer or contractor, as applicable, has the capacity and the bona fide intention to perform the Contract without any subcontracting, or to perform the Contract without awarding the amount of subcontracts represented by the **Participation Goals**. In making such determination, Agency may consider whether the **M/WBE** Utilization Plan is consistent with past subcontracting practices of the bidder, proposer or contractor, as applicable, whether the bidder, proposer or contractor, as applicable, has made efforts to form a joint venture with a certified firm, and whether the bidder, proposer, or contractor, as applicable, has made good faith efforts to identify other portions of the Contract that it intends to subcontract.

11. Modification of **M/WBE** Utilization Plan. (a) A Contractor may request a modification of its **M/WBE** Utilization Plan after award of this Contract. **PLEASE NOTE: If this Contract is a public works project subject to GML §101(5) (i.e., a contract valued at or below $3M for projects in New York City) or if the Contract is subject to a project labor agreement in accordance with Labor Law §222, and the bidder is required to identify at the time of bid submission its intended subcontractors for the Wicks trades (plumbing and gas fitting; steam heating, hot water heating, ventilating and air conditioning (HVAC); and electric wiring), the Contractor may request a Modification of its M/WBE Utilization Plan as part of its bid submission.** The Agency may grant a request for Modification of a Contractor's **M/WBE** Utilization Plan if it determines that the Contractor has established, with appropriate documentary and other evidence, that it made reasonable, good faith efforts to meet the **Participation Goals.** In making such determination, Agency shall consider evidence of the following efforts, as applicable, along with any other relevant factors:

(i) The Contractor advertised opportunities to participate in the Contract, where appropriate, in general circulation media, trade and professional association publications and small business media, and publications of minority and women's business organizations;
(ii) The Contractor provided notice of specific opportunities to participate in the Contract, in a timely manner, to minority and women's business organizations;
(iii) The Contractor sent written notices, by certified mail or facsimile, in a timely manner, to advise MBEs or WBEs that their interest in the Contract was solicited;
(iv) The Contractor made efforts to identify portions of the work that could be substituted for portions originally designated for participation by MBEs and/or WBEs in the M/WBE Utilization Plan, and for which the Contractor claims an inability to retain MBEs or WBEs;

(v) The Contractor held meetings with MBEs and/or WBEs prior to the date their bids or proposals were due, for the purpose of explaining in detail the scope and requirements of the work for which their bids or proposals were solicited;

(vi) The Contractor made efforts to negotiate with MBEs and/or WBEs as relevant to perform specific subcontracts, or act as suppliers or service providers;

(vii) Timely written requests for assistance made by the Contractor to Agency's M/WBE liaison officer and to DSBS;

(viii) Description of how recommendations made by DSBS and Agency were acted upon and an explanation of why action upon such recommendations did not lead to the desired level of participation of MBEs and/or WBEs.

Agency's M/WBE officer shall provide written notice to the Contractor of the determination.

(b) The Agency may modify the **Participation Goals** when the scope of the work has been changed by the Agency in a manner that affects the scale and types of work that the Contractor indicated in its **M/WBE** Utilization Plan would be awarded to subcontractors.

12. If this Contract is for an indefinite quantity of construction, standard or professional services or is a requirements type contract and the Contractor has submitted an **M/WBE** Utilization Plan and has committed to subcontract work to MBEs and/or WBEs in order to meet the **Participation Goals**, the Contractor will not be deemed in violation of the M/WBE Program requirements for this Contract with regard to any work which was intended to be subcontracted to an MBE and/or WBE to the extent that the Agency has determined that such work is not needed.

13. If **Participation Goals** have been established for this Contract or a Task Order issued pursuant to this Contract, at least once annually during the term of the Contract or Task Order, as applicable, Agency shall review the Contractor's progress toward attainment of its M/WBE Utilization Plan, including but not limited to, by reviewing the percentage of work the Contractor has actually awarded to MBE and/or WBE subcontractors and the payments the Contractor made to such subcontractors.

14. If **Participation Goals** have been established for this Contract or a Task Order issued pursuant to this Contract, Agency shall evaluate and assess the Contractor's performance in meeting those goals, and such evaluation and assessment shall become part of the Contractor's overall contract performance evaluation.

PART B: MISCELLANEOUS

1. The Contractor shall take notice that, if this solicitation requires the establishment of an **M/WBE** Utilization Plan, the resulting contract may be audited by DSBS to determine compliance with Section 6-129. See §6-129(e)(10). Furthermore, such resulting contract may also be examined by the City's Comptroller to assess compliance with the **M/WBE** Utilization Plan.

2. Pursuant to DSBS rules, construction contracts that include a requirement for an **M/WBE** Utilization Plan shall not be subject to the law governing Locally Based Enterprises set forth in Section 6-108.1 of the Administrative Code of the City of New York.

3. DSBS is available to assist contractors and potential contractors in determining the availability of MBEs and/or WBEs to participate as subcontractors, and in identifying opportunities that are appropriate for participation by MBEs and/or WBEs in contracts.

4. Prospective contractors are encouraged to enter into qualified joint venture agreements with MBEs and/or WBEs as defined by Section 6-129(c)(30).

5. By submitting a bid or proposal the Contractor hereby acknowledges its understanding of the M/WBE Program requirements set forth herein and the pertinent provisions of Section 6-129, and any rules promulgated thereunder, and if awarded this Contract, the Contractor hereby agrees to comply with the M/WBE Program requirements of this Contract and pertinent provisions of Section 6-129, and any rules promulgated thereunder, all of which shall be deemed to be material terms of this Contract. The Contractor hereby agrees to make all reasonable, good faith efforts to solicit and obtain the participation of MBEs and/or WBEs to meet the required **Participation Goals**.

ARTICLE II. ENFORCEMENT

1. If Agency determines that a bidder or proposer, as applicable, has, in relation to this procurement, violated Section 6-129 or the DSBS rules promulgated pursuant to Section 6-129, Agency may disqualify such bidder or proposer, as applicable, from competing for this Contract and the Agency may revoke such bidder's or proposer's prequalification status, if applicable.

2. Whenever Agency believes that the Contractor or a subcontractor is not in compliance with Section 6-129 or the DSBS rules promulgated pursuant to Section 6-129, or any provision of this Contract that implements Section 6-129, including, but not limited to any **M/WBE** Utilization Plan, Agency shall send a written notice to the Contractor describing the alleged noncompliance and offering the Contractor an opportunity to be heard. Agency shall then conduct an investigation to determine whether such Contractor or subcontractor is in compliance.

3. In the event that the Contractor has been found to have violated Section 6-129, the DSBS rules promulgated pursuant to Section 6-129, or any provision of this Contract that implements Section 6-129, including, but not limited to, any **M/WBE** Utilization Plan, Agency may determine that one of the following actions should be taken:

(a) entering into an agreement with the Contractor allowing the Contractor to cure the violation;
(b) revoking the Contractor's pre-qualification to bid or make proposals for future contracts;
(c) making a finding that the Contractor is in default of the Contract;
(d) terminating the Contract;
(e) declaring the Contractor to be in breach of Contract;
(f) withholding payment or reimbursement;
(g) determining not to renew the Contract;
(h) assessing actual and consequential damages;
(i) assessing liquidated damages or reducing fees, provided that liquidated damages may be based on amounts representing costs of delays in carrying out the purposes of the M/WBE Program, or in meeting the purposes of the Contract, the costs of meeting utilization goals through additional procurements, the administrative costs of investigation and enforcement, or other factors set forth in the Contract;
(j) exercising rights under the Contract to procure goods, services or construction from another contractor and charge the cost of such contract to the Contractor that has been found to be in noncompliance; or
(k) taking any other appropriate remedy.

4. If an **M/WBE** Utilization Plan has been submitted, and pursuant to this Article II, Section 3, the Contractor has been found to have failed to fulfill its **Participation Goals** contained in its **M/WBE** Utilization Plan or the **Participation Goals** as modified by Agency pursuant to Article I, Part A, Section 11, Agency may assess liquidated damages in the amount of ten percent (10%) of the difference between the dollar amount of work required to be awarded to MBE and/or WBE firms to meet the **Participation Goals** and the dollar amount the Contractor actually awarded and paid, and/or credited, to MBE and/or WBE firms. In view of the difficulty of accurately ascertaining the loss which the City will suffer by reason of Contractor's failure to meet the **Participation Goals**, the foregoing amount is hereby fixed and agreed as the liquidated damages that the City will suffer by reason of such failure, and not as a penalty. Agency may deduct and retain out of any monies which may become due under this Contract the amount of any such liquidated damages; and in case the amount which may become due under this Contract shall be less than the amount of liquidated damages suffered by the City, the Contractor shall be liable to pay the difference.

5. Whenever Agency has reason to believe that an MBE and/or WBE is not qualified for certification, or is participating in a contract in a manner that does not serve a commercially useful function (as defined in Section 6-129(c)(8)), or has violated any provision of Section 6- 129, Agency shall notify the Commissioner of DSBS who shall determine whether the certification of such business enterprise should be revoked.

6. Statements made in any instrument submitted to Agency pursuant to Section 6-129 shall be submitted under penalty of perjury and any false or misleading statement or omission shall be grounds for the application of any applicable criminal and/or civil penalties for perjury. The making of a false or fraudulent statement by an MBE and/or WBE in any instrument submitted pursuant to Section 6-129 shall, in addition, be grounds for revocation of its certification.

7. The Contractor's record in implementing its **M/WBE** Utilization Plan shall be a factor in the evaluation of its performance. Whenever Agency determines that a Contractor's compliance with an **M/WBE** Utilization Plan has been unsatisfactory, Agency shall, after consultation with the City Chief Procurement Officer, file an advice of caution form for inclusion in VENDEX as caution data.

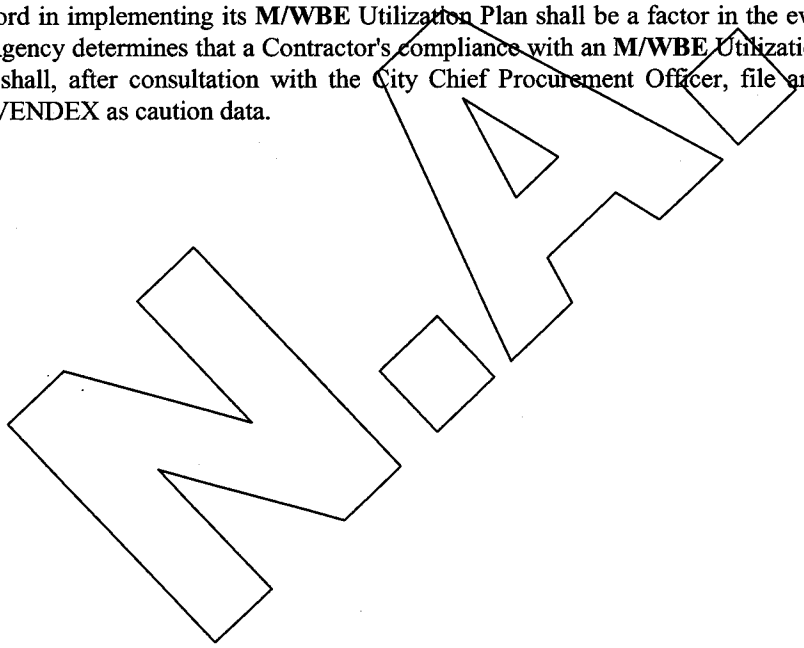

Tax ID #: _____

APT E-PIN #: 85017B0005

SCHEDULE B – M/WBE Utilization Plan
Part I: M/WBE Participation Goals

Part I to be completed by contracting agency

Contract Overview

APT E- Pin # 85017B0005 **FMS Project ID#:** HWXP136B

Project Title/ Agency PIN # RECONSTRUCTION OF GRAND CONCOURSE SERVICE ROADS / 85016HW0061C

Bid/Proposal Response Date

Contracting Agency Department of Design and Construction

Agency Address 30-30 Thomson Ave. **City** Long Island City **State** NY **Zip Code** 11101

Contact Person Lea Case **Title** MWBE Liaison & Compliance Analyst

Telephone # (718) 391-1003 **Email** casele@ddc.nyc.gov

Project Description *(attach additional pages if necessary)*

**RECONSTRUCTION OF GRAND CONCOURSE SERVICE ROADS,
RESURFACING OF THE MAIN ROADWAY AND WIDENING OF MEDIANS
FROM EAST 171ST STREET TO EAST 175TH STREET**

INCLUDING SEWER, WATER MAIN, STREET LIGHTING, AND TRAFFIC SIGNAL WORK

Together With All Work Incidental Thereto

**BOROUGH OF THE BRONX
CITY OF NEW YORK**

M/WBE Participation Goals for Services
Enter the percentage amount for each group or for an unspecified goal. Please note that there are no goals for Asian Americans in Professional Services.

Prime Contract Industry: Construction

Group	Percentage	
Unspecified*	**EXEMPT %**	
or		
Black American	**UNSPECIFIED***	
Hispanic American	**UNSPECIFIED***	
Asian American	**UNSPECIFIED***	
Women	**UNSPECIFIED***	
Total Participation Goals	**EXEMPT %**	**Line 1**

**Note: For this procurement, individual ethnicity and gender goals are not specified. The Total Participation Goal for construction contracts may be met by using either Black-American, Hispanic-American, Asian American, or Women certified firms or any combination of such firms.*

Tax ID #: _____ APT E-PIN #: _____

SCHEDULE B - Part II: M/WBE Participation Plan

Part II to be completed by the bidder/proposer.
Please note: For Non-M/WBE Prime Contractors who will NOT subcontract any services and will self-perform the entire contract, you must obtain a FULL waiver by completing the Waiver Application on pages 17 and 18 and timely submitting it to the contracting agency pursuant to the Notice to Prospective Contractors. Once a FULL WAIVER is granted, it must be included with your bid or proposal and you do not have to complete or submit this form with your bid or proposal.

Section I: Prime Contractor Contact Information

Tax ID # _____ **FMS Vendor ID #** _____

Business Name _____ **Contact Person** _____

Address _____

Telephone # _____ **Email** _____

Section II: M/WBE Utilization Goal Calculation: Check the applicable box and complete subsection.

PRIME CONTRACTOR ADOPTING AGENCY M/WBE PARTICIPATION GOALS

☐ **For Prime Contractors (including Qualified Joint Ventures and M/WBE firms) adopting Agency M/WBE Participation Goals.**

Calculate the total dollar value of your total bid that you agree will be awarded to M/WBE subcontractors for services and/or credited to an M/WBE prime contractor or Qualified Joint Venture.

Please review the Notice to Prospective Contractors for more information on how to obtain credit for M/WBE participation.

Total Bid/Proposal Value		Agency Total Participation Goals (Line 1, Page 13)		Calculated M/WBE Participation Amount
$	X		=	$ Line 2

PRIME CONTRACTOR OBTAINED PARTIAL WAIVER APPROVAL: ADOPTING MODIFIED M/WBE PARTICIPATION GOALS

☐ **For Prime Contractors (including Qualified Joint Ventures and M/WBE firms) adopting Modified M/WBE Participation Goals.**

Calculate the total dollar value of your total bid that you agree will be awarded to M/WBE subcontractors for services and/or credited to an M/WBE prime contractor or Qualified Joint Venture.

Please review the Notice to Prospective Contractors for more information on how to obtain credit for M/WBE participation.

Total Bid/Proposal Value		Adjusted Participation Goal (From Partial Waiver)		Calculated M/WBE Participation Amount
$	X		=	$ Line 3

Tax ID #: _____

APT E-
PIN #: _____ -

Section III: M/WBE Utilization Plan: How Proposer/Bidder Will Fulfill M/WBE Participation Goals. Please review the Notice to Prospective Contractors for more information on how to obtain credit for M/WBE participation. Check applicable box. The Proposer or Bidder will fulfill the M/WBE Participation Goals:

☐ As an M/WBE Prime Contractor that will self-perform and/or subcontract to other M/WBE firms a portion of the contract the value of which is at least the amount located on Lines 2 or 3 above, as applicable. The value of any work subcontracted to non-M/WBE firms will not be credited towards fulfillment of M/WBE Participation Goals. Please check all that apply to Prime Contractor:

☐ MBE ☐ WBE

☐ As a Qualified Joint Venture with an M/WBE partner, in which the value of the M/WBE partner's participation and/or the value of any work subcontracted to other M/WBE firms is at least the amount located on Lines 2 or 3 above, as applicable. The value of any work subcontracted to non M/WBE firms will not be credited towards fulfillment of M/WBE Participation Goals.

☐ As a non M/WBE Prime Contractor that will enter into subcontracts with M/WBE firms the value of which is at least the amount located on Lines 2 or 3 above, as applicable.

Section IV: General Contract Information

What is the expected percentage of the total contract dollar value that you expect to award in subcontracts for services, regardless of M/WBE status? % ____

✓ Scopes of Subcontract Work

Enter brief description of the type(s) and dollar value of subcontracts for all/any services you plan on subcontracting if awarded this contract. For each item, indicate whether the work is designated for participation by MBEs and/or WBEs and the time frame in which such work is scheduled to begin and end. Use additional sheets if necessary.

1. _____
2. _____
3. _____
4. _____
5. _____
6. _____
7. _____
8. _____
9. _____
10. _____
11. _____
12. _____
13. _____
14. _____
15. _____
16. _____
17. _____

Tax ID #: _____ APT E-PIN #: _____

Section V: Vendor Certification and Required Affirmations

I hereby:

1) acknowledge my understanding of the M/WBE participation requirements as set forth herein and the pertinent provisions of Section 6-129 of the Administrative Code of the City of New York ("Section 6-129"), and the rules promulgated thereunder;

2) affirm that the information supplied in support of this M/WBE Utilization Plan is true and correct;

3) agree, if awarded this Contract, to comply with the M/WBE participation requirements of this Contract, the pertinent provisions of Section 6-129, and the rules promulgated thereunder, all of which shall be deemed to be material terms of this Contract;

4) agree and affirm that it is a material term of this Contract that the Vendor will award the total dollar value of the M/WBE Participation Goals to certified MBEs and/or WBEs, unless a full waiver is obtained or such goals are modified by the Agency; and

5) agree and affirm, if awarded this Contract, to make all reasonable, good faith efforts to meet the M/WBE Participation Goals, or If a partial waiver is obtained or such goals are modified by the Agency, to meet the modified Participation Goals by soliciting and obtaining the participation of certified MBE and/or WBE firms.

Signature _____ **Date** _____

Print Name _____ **Title** _____

N.A.

SCHEDULE B – PART III – REQUEST FOR WAIVER OF M/WBE PARTICIPATION REQUIREMENT

Contract Overview

Tax ID # _____ **FMS Vendor ID #** _____

Business Name _____

Contact Name _____ **Telephone #** _____ **Email** _____

Type of Procurement ☐ **Competitive Sealed Bids** ☐ **Other** **Bid/Response Due Date** _____

APT E-PIN # (for this procurement): _____ **Contracting Agency:** _____

M/WBE Participation Goals as described in bid/solicitation documents

_____ % **Agency M/WBE Participation Goal**

Proposed M/WBE Participation Goal ***as anticipated by vendor seeking waiver***

_____ % **of the total contract value anticipated in good faith by the bidder/proposer to be subcontracted for services and/or credited to an M/WBE Prime Contractor or Qualified Joint Venture.**

Basis for Waiver Request: *Check appropriate box & explain in detail below (attach additional pages if needed)*

☐ **Vendor does not subcontract services, and has the capacity and good faith intention to perform all such work itself with its own employees.**

☐ **Vendor subcontracts *some* of this type of work but at a *lower* % than bid/solicitation describes, and has the capacity and good faith intention to do so on this contract. (Attach subcontracting plan outlining services that the vendor will self-perform and subcontract to other vendors or consultants.)**

☐ **Vendor has other legitimate business reasons for proposing the M/WBE Participation Goal above. Explain under separate cover.**

References

List 3 most recent contracts performed for NYC agencies (if any). Include information for each subcontract awarded in performance of such contracts. Add more pages if necessary.

CONTRACT NO. _____ **AGENCY** _____ **DATE COMPLETED** _____

Total Contract Amount $ _____ **Total Amount Subcontracted** $ _____

Item of Work Subcontracted and Value of subcontract _____ Item of Work Subcontracted and Value of subcontract _____ Item of Work Subcontracted and Value of subcontract _____

CONTRACT NO. _____ **AGENCY** _____ **DATE COMPLETED** _____

Total Contract Amount $ _____ **Total Amount Subcontracted** $ _____

Item of Work Subcontracted and Value of subcontract _____ Item of Work Subcontracted and Value of subcontract _____ Item of Work Subcontracted and Value of subcontract _____

CONTRACT NO. **AGENCY** **DATE COMPLETED**

Total Contract Amount $ **Total Amount Subcontracted** $

Item of Work Subcontracted and Value of subcontract _____ Item of Work Subcontracted and Value of subcontract _____ Item of Work Subcontracted and Value of subcontract _____

List 3 most recent contracts performed for other entities. Include information for each subcontract awarded in performance of such contracts. Add more pages if necessary.

(Complete ONLY if vendor has performed fewer than 3 New York City contracts.)

TYPE OF Contract _____ **ENTITY** _____ **DATE COMPLETED** _____

Manager at entity that hired vendor (Name/Phone No./Email) _____

Total Contract Amount $ _____ **Total Amount Subcontracted** $ _____

Type of Work Subcontracted _____ _____ _____

_____

TYPE OF Contract _____ **AGENCY/ENTITY** _____ **DATE COMPLETED** _____

Manager at agency/entity that hired vendor (Name/Phone No./Email) _____

Total Contract Amount $ _____ **Total Amount Subcontracted** $ _____

Item of Work Subcontracted and Value of subcontract _____ Item of Work Subcontracted and Value of subcontract _____ Item of Work Subcontracted and Value of subcontract _____

_____

TYPE OF Contract _____ **AGENCY/ENTITY** _____ **DATE COMPLETED** _____

Manager at entity that hired vendor (Name/Phone No./Email) _____

Total Contract Amount $ _____ **Total Amount Subcontracted** $ _____

Item of Work Subcontracted and Value of subcontract _____ Item of Work Subcontracted and Value of subcontract _____ Item of Work Subcontracted and Value of subcontract _____

_____

VENDOR CERTIFICATION: *I hereby affirm that the information supplied in support of this waiver request is true and correct, and that this request is made in good faith.*

Signature: _____ **Date:** _____

Print Name: _____ **Title:** _____

Shaded area below is for agency completion only

AGENCY CHIEF CONTRACTING OFFICER APPROVAL

Signature: _____ Date: _____

CITY CHIEF PROCUREMENT OFFICER APPROVAL

Signature: _____ Date: _____

Waiver Determination:

Full Waiver Approved ☐

Waiver Denied ☐

Partial Waiver Approved ☐

Revised Participation Goal: _____%

APPRENTICESHIP PROGRAM REQUIREMENTS

Bidders are advised that the Apprenticeship Program Requirements set forth below apply to each contract for which a check mark is indicated before the word "Yes". Compliance with these requirements will be determined solely by the City.

__√__ YES _____ NO

(1) Apprenticeship Program Requirements

Notice to Bidders: Please be advised that, pursuant to the authority granted to the City under Labor Law Section 816-b, the Department of Design and Construction hereby requires that the contractor awarded a contract as a result of this Invitation for Bids, and any of its subcontractors with subcontracts worth two million dollars or over, have, prior to entering into such contract or subcontract, apprenticeship agreements appropriate for the type and scope of work to be performed that have been registered with, and approved by, the New York State Commissioner of Labor. In addition, the contractor and its subcontractors will be required to show that such apprenticeship program/s have successfully passed the two year Probation period following the initial registration date of such program/s with the New York State Department of Labor.

The failure to prove, upon request, that these requirements have been met shall result in the contract not being awarded to the contractor or the subcontract not being approved..

Please be further advised that, pursuant to Labor Law Section 220, the allowable ratio of apprentices to journeypersons in any craft classification shall not be greater than the ratio permitted to the contractor as to its workforce on any job under the registered apprenticeship program.

(2) Apprenticeship Program Questionnaire

The bidder must submit a completed and signed Apprenticeship Program Questionnaire. The Questionnaire is set forth on the following page of the Bid Booklet.

APPRENTICESHIP PROGRAM QUESTIONNAIRE ("APQ")

Bidder Name: _____

Project ID Number: _____

The Bidder MUST complete, sign, and submit this Apprenticeship Program Questionnaire with its bid.

1. Does the bidder have any Apprenticeship Program agreement(s) appropriate for the type and scope of work to be performed? (Note: Participation may be by either direct sponsorship or through collective bargaining agreement(s).)

   _____YES _____NO

2. Has/have the bidder's Apprenticeship Program agreement(s) been registered with, and approved by the New York State Commissioner of Labor ("NYSDOL Commissioner")?

   _____YES _____NO

3. Has/have the bidder's Apprenticeship Program successfully passed the two-year Probation period following its initial registration with the New York State Department of Labor ("NYSDOL")?

   _____YES _____NO

If the answers to Questions 1, 2, and 3 are "Yes". The bidder shall, in the space below (and/or attached herewith where applicable), provide the contact information for such Apprenticeship Program(s) as well as information demonstrating that such Apprenticeship Program(s) have passed the two-year Probation period following its initial registration with the NYSDOL. (The bidder may attach additional pages if necessary).

- **Where the bidder directly sponsors any such apprenticeship Program(s),** the bidder shall provide the following:
  - The trade classification(s) covered by such program(s), and the date(s) such program(s) was/were approved by the NYSDOL Commissioner; and/or
  - A copy of a letter(s) from the NYSDOL, on NYSDOL's letterhead, executed by an official thereof, which verifies/verify the trade classification(s) covered by such program(s), and the date(s) such program(s) was/were approved by the NYSDOL Commissioner and the Active status of such program(s).

- **Where the bidder participates in any such Apprenticeship Program(s) through its membership in an employer organization(s) that directly sponsors such program(s) or where the employer association(s) participates in such program(s) through collective bargaining,** the bidder shall provide the following:
  - The contact information for the employer organization(s), and the apprenticeable trade(s) covered pursuant to the bidder's affiliation therewith, and the date such program(s) was/were approved by the NYSDOL Commissioner; or
  - A letter(s) from such employer organization(s), on letterhead of such organization(s), executed by an officer, delegate or official thereof, which verifies/verify the trade classification(s) covered by such program(s) was/were approved by the NYSDOL Commissioner, and that the bidder is both a member in good standing of the identified employer organization and is subject to the provisions of the Apprenticeship Program agreement(s) sponsored thereby.

APPRENTICESHIP PROGRAM QUESTIONNAIRE ("APQ")

Project ID Number: _____

- **Where the bidder participates in any such Apprenticeship Programs through collective bargaining agreements,** the bidder shall provide the following:

    - The contact information for such collective bargaining entity(ies) and the apprenticeable trade(s) covered pursuant to the bidder's affiliation therewith;
    - A letter(s) from such collective bargaining entity(ies), on letterhead of such entity(ies), executed by an officer, delegate or official thereof, which verifies/verify the bidder's status as a signatory/participant in good standing to such collective bargaining entity(ies) Apprenticeship Program Agreements.

_____

_____

_____

_____

_____

_____

_____

_____

_____

_____

_____

_____

_____

_____

Bidder: _____

By: _____ Title: _____
(Signature of Partner or Corporate Officer)

Date: _____

Project ID. _____

SAFETY QUESTIONNAIRE

The bidder must include, with its bid, all information requested on this Safety Questionnaire. Failure to provide a completed and signed Safety Questionnaire at the time of bid opening may result in disqualification of the bid as non-responsive.

1. Bidder Information:

Company Name: _____

DDC Project Number: _____

Company Size: _____ Ten (10) employees or less

_____ Greater than ten (10) employees

Company has previously worked for DDC _____ YES _____ NO

2. Type(s) of Construction Work

TYPE OF WORK	LAST 3 YEARS	THIS PROJECT
General Building Construction		
Residential Building Construction		
Nonresidential Building Construction		
Heavy Construction, except building		
Highway and Street Construction		
Heavy Construction, except highways		
Plumbing, Heating, HVAC		
Painting and Paper Hanging		
Electrical Work		
Masonry, Stonework and Plastering		
Carpentry and Floor Work		
Roofing, Siding, and Sheet Metal		
Concrete Work		
Specialty Trade Contracting		
Asbestos Abatement		
Other (specify)		
_____		

3. Experience Modification Rate:

The Experience Modification Rate (EMR) is a rating generated by the National Council of Compensation Insurance (NCCI). This rating is used to determine the contractor's premium for worker's compensation insurance. The contractor may obtain its EMR by contacting its insurance broker or the NCCI. If the contractor cannot obtain its EMR, it must submit a written explanation as to why.

Project ID. _____

The Contractor must indicate its Intrastate and Interstate EMR for the past three years. [Note: For contractors with less than three years of experience, the EMR will be considered to be 1.00].

YEAR	INTRASTATE RATE	INTERSTATE RATE
_____	_____	_____
_____	_____	_____
_____	_____	_____

If the Intrastate and/or Interstate EMR for any of the past three years is greater than 1.00, the contractor must attach, to this questionnaire, a written explanation for the rating and identify what corrective action was taken to correct the situation resulting in that rating.

4. OSHA Information:

____ YES ____ NO Contractor has received a willful violation issued by OSHA or New York City Department of Buildings (NYCDOB) within the last three years.

____ YES ____ NO Contractor has had an incident requiring OSHA notification within 8 hours (all work-related fatalities) or an incident requiring OSHA notification within 24 hours (all work-related in-patient hospitalizations, all amputations and all losses of an eye).

The Occupational Safety and Health Act (OSHA) of 1970 requires employers with ten or more employees, on a yearly basis to complete and maintain on file the form entitled "Log of Work-related Injuries and Illnesses". This form is commonly referred to as the OSHA 300 Log (OSHA 200 Log for 2001 and earlier).

The OSHA 300 Log must be submitted for the last three years for contractors with more than ten employees.

The Contractor must indicate the total number of hours worked by its employees, as reflected in payroll records for the past three years.

The contractor must submit the Incident Rate for Lost Time Injuries (the Incident Rate) for the past three years. The Incident Rate is calculated in accordance with the formula set forth below. For each given year, the total number of incidents is the total number of non-fatal injuries and illnesses reported on the OSHA 300 Log. The 200,000 hours represents the equivalent of 100 employees working forty hours a week, fifty weeks per year.

$$\text{Incident Rate} = \frac{\text{Total Number of Incidents X 200,000}}{\text{Total Number of Hours Worked by Employees}}$$

YEAR	TOTAL NUMBERS OF HOURS WORKED BY EMPLOYEES	INCIDENT RATE
_____	_____	_____
_____	_____	_____
_____	_____	_____

Project ID. _____

If the contractor's Incident Rate for any of the past three years is one point higher than the Incident Rate for the type of construction it performs (listed below), the contractor must attach, to this questionnaire, a written explanation for the relatively high rate.

General Building Construction	8.5
Residential Building Construction	7.0
Nonresidential Building Construction	10.2
Heavy Construction, except building	8.7
Highway and Street Construction	9.7
Heavy Construction, except highways	8.3
Plumbing, Heating, HVAC	11.3
Painting and Paper Hanging	6.9
Electrical Work	9.5
Masonry, Stonework and Plastering	10.5
Carpentry and Floor Work	12.2
Roofing, Siding, and Sheet Metal	10.3
Concrete Work	8.6
Specialty Trade Contracting	8.6

5. Safety Performance on Previous DDC Project(s)

___ YES ___ NO Contractor previously audited by the DDC Office of Site Safety.

DDC Project Number(s): _____, _____, _____

___ YES ___ NO Accident on previous DDC Project(s).

DDC Project Number(s): _____, _____, _____

___ YES ___ NO Fatality or Life-altering Injury on DDC Project(s) within the last three years. [Examples of a life-altering injury include loss of limb, loss of a sense (e.g., sight, hearing), or loss of neurological function].

DDC Project Number(s): _____, _____, _____

Date: _____ By: _____

(Signature of Owner, Partner, Corporate Officer)

Title: _____

Pre-Award Process

The bidder is advised that as part of the pre-award review of its bid, it may be required to submit the information described in Sections (A) through (D) below. If required, such information must be submitted by the bidder within five (5) business days following receipt of notification from DDC that it is among the low bidders. Such notification from DDC will be by facsimile or in writing and will specify the types of information must be submitted. The types of information the bidder may be required to submit are described below. In the event the bidder fails to submit the required information within the specified time frame, its bid may be rejected as nonresponsive.

****

(A) **Project Reference Form**: If required, the bidder must complete and submit the Project Reference Form set forth on pages 27 through 29 of this Bid Booklet. The Project Reference Form consists of 3 parts: (1) Contracts Completed by the Bidder, (2) Contracts Currently Under Construction by the Bidder, and (3) Pending Contracts Not Yet Started by the Bidder.

(B) **Copy of License**: If required, the bidder must submit a copy of the license under which the bidder will be performing the work. Such license must clearly show the following: (1) Name of the Licensee, (2) License Number, and (3) Expiration date of the License. A copy of the license will be required from bidders for the following contracts: Plumbing Work, Electrical Work and Asbestos Abatement.

(C) **Financial Information**: If required, the bidder must submit the financial information described below:

(1) Audited Financial Statements: Financial statements (Balance Sheet and Income Statement) of the entity submitting the bid, as audited by an independent auditor licensed to practice as a certified public accountant (CPA). Audited financial statements for the three most recent fiscal years must be submitted. Each such financial statement must include the auditor's standard report.

If the bidder does not have audited financial statements, it must submit an affidavit attesting to the fact that the bidder does not have such statements. In addition, the bidder must submit the following documentation covering the three most recent fiscal years: signed federal tax returns, unaudited financial statements, and a "certified review letter" from a certified public accountant (CPA) verifying the unaudited financial statements.

Unless the most recent audited or unaudited financial statement was issued within ninety (90) days, the bidder must submit interim financial information that includes data on financial position and results of operation (income data) for the current fiscal year. Such information may be summarized on a monthly or quarterly basis or at other intervals.

(2) Schedule of Aged Accounts Receivable, including portion due within ninety (90) days.

(D) **Project Specific Information**: If required, the bidder must submit the project specific information described below:

(1) Statement indicating the number of years of experience the bidder has had and in what type of construction.
(2) Resumes of all key personnel to be involved in the project, including the proposed project superintendent.
(3) List of significant pieces of equipment expected to be used for the contract, and whether such equipment is owned or leased.
(4) Description of work expected to be subcontracted, and to what firms, if known.
(5) List of key material suppliers.
(6) Preliminary bar chart time schedule
(7) Contractor's expected means of financing the project. This should be based on the assumption that the contractor is required to finance 2X average monthly billings throughout the contract period.
(8) Any other issues the contractor sees as impacting his ability to complete the project according to the contract.

In addition to the information described in Sections (A) through (D) above, the bidder shall submit such additional information as the Commissioner may require, including without limitation, an explanation or justification for specific unit price items.

The bidder is further advised that it may be required to attend a pre-award meeting with DDC representatives. If such a meeting is convened, the bidder will be advised as to any additional material to be provided.

A. PROJECT REFERENCES – CONTRACTS COMPLETED BY THE BIDDER

List all contracts substantially completed within the last 4 years, up to a maximum of 10, in descending order of date of substantial completion.

Project & Location	Contract Type	Contract Amount ($000)	Date Completed	Owner Reference & Tel. No.	Architect/Engineer Reference & Tel. No. if different from owner

B. PROJECT REFERENCES – CONTRACTS CURRENTLY UNDER CONSTRUCTION BY THE BIDDER

List all contracts currently under construction even if they are not similar to the contract being awarded.

Project & Location	Contract Type	Contract Amount ($000)	Subcontracted to Others ($000)	Uncompleted Portion ($000)	Date Scheduled to Complete	Owner Reference & Tel. No.	Architect/Engineer Reference & Tel. No. if different from owner

C. PROJECT REFERENCES – PENDING CONTRACTS NOT YET STARTED BY THE BIDDER

List all contracts awarded to or won by the bidder but not yet started.

Project & Location	Contract Type	Contract Amount ($000)	Date Scheduled to Start	Owner Reference & Tel. No.	Architect/Engineer Reference & Tel. No. if different from owner

(NO TEXT ON THIS PAGE)

OFFICE OF THE MAYOR
BUREAU OF LABOR SERVICES
CONTRACT CERTIFICATE

To be completed if the contract is less than $1,000,000

Contractor: _____

Address: _____

_____

Telephone Number: _____

Name and Title of Signatory: _____

_____

Contracting Agency or Owner: _____

Project Number: _____

Proposed Contract Amount: _____

Description and Address of Proposed Contract: _____

Names of Subcontractors in the amount of 750,000 or more on this contract (if not known at this time, so state indicating that trades will be subcontracted):

_____

_____

_____

I, (fill in name of person signing) _____, hereby affirm that I am authorized by the above-named contractor to certify that said contractor's proposed contract with the above-named owner or city agency is less than $1,000,000. This affirmation is made in accordance with Executive Order No. 50 (1980) as amended and its implementing regulations.

_____ _____

Date Signature

WILLFUL OR FRAUDULENT FALSIFICATION OF ANY DATA OR INFORMATION SUBMITTED HEREWITH MAY RESULT IN THE TERMINATION OF ANY CONTRACT BETWEEN THE CITY AND THE BIDDER OR CONTRACTOR AND BAR THE BIDDER OR CONTRACTOR FROM PARTICIPATION IN ANY CITY CONTRACT FOR A PERIOD OF UP TO THREE YEARS. FURTHER, SUCH FALSIFICATION MAY RESULT IN CRIMINAL PROSECUTION.

(NO TEXT ON THIS PAGE)

VENDEX COMPLIANCE

(A) Vendex Fees: Pursuant to Procurement Policy Board Rule 2-08(f)(2), the contractor will be charged a fee for the administration of the VENDEX system, including the Vendor Name Check process, if a Vendor Name Check review is required to be conducted by the Department of Investigation. The contractor shall also be required to pay the applicable required fees for any of its subcontractors for which Vendor Name Check reviews are required. The fee(s) will be deducted from payments made to the contractor under the contract. For contracts with an estimated value of less than or equal to $1,000,000, the fee will be $175 per Vendor Name Check review. For contracts with an estimated value of greater than $1,000,000, the fee will be $350 per Vendor Name Check review.

(B) Confirmation of Vendex Compliance: The Bidder shall submit this Confirmation of Vendex Compliance to the Department of Design and Construction, Contracts Section, 30-30 Thomson Avenue – First Floor, Long Island City, NY 11101.

Bid Information: The Bidder shall complete the bid information set forth below.

Name of Bidder: _____
Bidder's Address: _____
Bidder's Telephone Number: _____
Bidder's Fax Number: _____
Date of Bid Opening: _____
PROJECT ID: _____

Vendex Compliance: To demonstrate compliance with Vendex requirements, the Bidder shall complete either Section (1) or Section (2) below, whichever applies.

(1) **Submission of Vendex Questionnaires to MOCS:** By signing in the space provided below, the Bidder certifies that as of the date specified below, the Bidder has submitted Vendex Questionnaires to the Mayor's Office of Contract Services, Attn: VENDEX, 253 Broadway, 9th Floor, New York, New York 10007.

Date of Submission: _____

By: _____
(Signature of Partner or corporate officer)

Print Name: _____

(2) **Submission of Certification of No Change to DDC:** By signing in the space provided below, the Bidder certifies that it has read the instructions in a "Vendor's Guide to Vendex" and that such instructions do not require the Bidder to submit Vendex Questionnaires. The Bidder has completed **TWO ORIGINALS** of the Certification of No Change set forth on the next page of this Bid Booklet.

By: _____
(Signature of Partner or corporate officer)

Print Name: _____

(NO TEXT ON THIS PAGE)

Certificate of No Change Form

Mayor's Office of Contract Services

- Please submit two completed forms. Copies will not be accepted.
- Please send both copies to the agency that requested it, unless you are advised to send it directly to the Mayor's Office of Contract Services (MOCS).
- A materially false statement willfully or fraudulently made in connection with this certification, and/or the failure to conduct appropriate due diligence in verifying the information that is the subject of this certification, may result in rendering the submitting entity non-responsible for the purpose of contract award.
- A materially false statement willfully or fraudulently made in connection with this certification may subject the person making the false statement to criminal charges

I, _____, being duly sworn, state that I have read
Enter Your Name

and understand all the items contained in the vendor questionnaire and any submission of change as identified on page one of this form and certify that as of this date, these items have not changed. I further certify that, to the best of my knowledge, information and belief, those answers are full, complete, and accurate; and that, to the best of my knowledge, information, and belief, those answers continue to be full, complete, and accurate.

In addition, I further certify on behalf of the submitting vendor that the information contained in the principal questionnaire(s) and any submission of change identified on page two of this form have not changed and have been verified and continue, to the best of my knowledge, to be full, complete and accurate.

I understand that the City of New York will rely on the information supplied in this certification as additional inducement to enter into a contract with the submitting entity.

Vendor Questionnaire *This section is required.*

This refers to the vendor questionnaire(s) submitted for the vendor doing business with the City.

Name of Submitting Entity: _____

Vendor's Address: _____

Vendor's EIN or TIN: _____ Requesting Agency: _____

Are you submitting this Certification as a parent? (Please circle one) Yes No

Signature date on the last full vendor questionnaire signed for the submitting vendor: _____

Signature date on change submission for the submitting vendor: _____

Principal Questionnaire

This section refers to the most recent principal questionnaire submissions.

Mayor's Office of Contract Services

	Principal Name	Date of signature on last full Principal Questionnaire	Date(s) of signature on submission of change
1			
2			
3			
4			
5			
6			

☐ Check if additional changes were submitted and attach a document with the date of additional submissions.

Certification *This section is required.*

This form must be signed and notarized. Please complete this twice. Copies will not be accepted.

Certified By:

_____
Name (Print)

_____
Title

_____
Name of Submitting Entity

_____ _____
Signature *Date*

Notarized By:

_____ _____ _____
Notary Public *County License Issued* *License Number*

Sworn to before me on: _____
Date

Certificate of No Change Form

Mayor's Office of Contract Services

- Please submit two completed forms. Copies will not be accepted.
- Please send both copies to the agency that requested it, unless you are advised to send it directly to the Mayor's Office of Contract Services (MOCS).
- A materially false statement willfully or fraudulently made in connection with this certification, and/or the failure to conduct appropriate due diligence in verifying the information that is the subject of this certification, may result in rendering the submitting entity non-responsible for the purpose of contract award.
- A materially false statement willfully or fraudulently made in connection with this certification may subject the person making the false statement to criminal charges

I, _____, being duly sworn, state that I have read
Enter Your Name

and understand all the items contained in the vendor questionnaire and any submission of change as identified on page one of this form and certify that as of this date, these items have not changed. I further certify that, to the best of my knowledge, information and belief, those answers are full, complete, and accurate; and that, to the best of my knowledge, information, and belief, those answers continue to be full, complete, and accurate.

In addition, I further certify on behalf of the submitting vendor that the information contained in the principal questionnaire(s) and any submission of change identified on page two of this form have not changed and have been verified and continue, to the best of my knowledge, to be full, complete and accurate.

I understand that the City of New York will rely on the information supplied in this certification as additional inducement to enter into a contract with the submitting entity.

Vendor Questionnaire *This section is required.*

This refers to the vendor questionnaire(s) submitted for the vendor doing business with the City.

Name of Submitting Entity: _____

Vendor's Address: _____

Vendor's EIN or TIN: _____ Requesting Agency: _____

Are you submitting this Certification as a parent? (Please circle one) Yes No

Signature date on the last full vendor questionnaire signed for the submitting vendor: _____

Signature date on change submission for the submitting vendor: _____

Principal Questionnaire

This section refers to the most recent principal questionnaire submissions.

Mayor's Office of Contract Services

	Principal Name	Date of signature on last full Principal Questionnaire	Date(s) of signature on submission of change
1			
2			
3			
4			
5			
6			

☐ Check if additional changes were submitted and attach a document with the date of additional submissions.

Certification *This section is required.*

This form must be signed and notarized. Please complete this twice. Copies will not be accepted.

Certified By:

_____
Name (Print)

_____
Title

_____
Name of Submitting Entity

_____ _____
Signature *Date*

Notarized By:

_____ _____ _____
Notary Public *County License Issued* *License Number*

Sworn to before me on: _____
Date

IRAN DIVESTMENT ACT COMPLIANCE RIDER

FOR NEW YORK CITY CONTRACTORS

The Iran Divestment Act of 2012, effective as of April 12, 2012, is codified at State Finance Law ("SFL") §165-a and General Municipal Law ("GML") §103-g. The Iran Divestment Act, with certain exceptions, prohibits municipalities, including the City, from entering into contracts with persons engaged in investment activities in the energy sector of Iran. Pursuant to the terms set forth in SFL §165-a and GML §103-g, a person engages in investment activities in the energy sector of Iran if:

(a) The person provides goods or services of twenty million dollars or more in the energy sector of Iran, including a person that provides oil or liquefied natural gas tankers, or products used to construct or maintain pipelines used to transport oil or liquefied natural gas, for the energy sector of Iran; or

(b) The person is a financial institution that extends twenty million dollars or more in credit to another person, for forty-five days or more, if that person will use the credit to provide goods or services in the energy sector in Iran and is identified on a list created pursuant to paragraph (b) of subdivision three of Section 165-a of the State Finance Law and maintained by the Commissioner of the Office of General Services.

A bid or proposal shall not be considered for award nor shall any award be made where the bidder or proposer fails to submit a signed and verified bidder's certification.

Each bidder or proposer must certify that it is not on the list of entities engaged in investment activities in Iran created pursuant to paragraph (b) of subdivision 3 of Section 165-a of the State Finance Law. In any case where the bidder or proposer cannot certify that they are not on such list, the bidder or proposer shall so state and shall furnish with the bid or proposal a signed statement which sets forth in detail the reasons why such statement cannot be made. The City of New York may award a bid to a bidder who cannot make the certification on a case by case basis if:

(1) The investment activities in Iran were made before the effective date of this section (i.e., April 12, 2012), the investment activities in Iran have not been expanded or renewed after the effective date of this section and the person has adopted, publicized and is implementing a formal plan to cease the investment activities in Iran and to refrain from engaging in any new investments in Iran: or

(2) The City makes a determination that the goods or services are necessary for the City to perform its functions and that, absent such an exemption, the City would be unable to obtain the goods or services for which the contract is offered. Such determination shall be made in writing and shall be a public document.

BIDDER'S CERTIFICATION OF COMPLIANCE WITH IRAN DIVESTMENT ACT

Pursuant to General Municipal Law §103-g, which generally prohibits the City from entering into contracts with persons engaged in investment activities in the energy sector of Iran, the bidder/proposer submits the following certification:

[*Please Check One*]

BIDDER'S CERTIFICATION

☐ By submission of this bid or proposal, each bidder/proposer and each person signing on behalf of any bidder/proposer certifies, and in the case of a joint bid each party thereto certifies as to its own organization, under penalty of perjury, that to the best of its knowledge and belief, that each bidder/proposer is not on the list created pursuant to paragraph (b) of subdivision 3 of Section 165-a of the State Finance Law.

☐ I am unable to certify that my name and the name of the bidder/proposer does not appear on the list created pursuant to paragraph (b) of subdivision 3 of Section 165-a of the State Finance Law. I have attached a signed statement setting forth in detail why I cannot so certify.

_____
SIGNATURE

_____
PRINTED NAME

_____
TITLE

Sworn to before me this
_____ day of____, 20____

_____
Notary Public

Dated:

THE CITY OF NEW YORK
DEPARTMENT OF SMALL BUSINESS SERVICES
DIVISION OF LABOR SERVICES
CONTRACT COMPLIANCE UNIT
110 WILLIAMS STREET
NEW YORK, NEW YORK 10038
PHONE: (212) 513-6323
FAX: (212) 618-8879

CONSTRUCTION

EMPLOYMENT

REPORT

(NO TEXT ON THIS PAGE)

The City of New York
Department of Small Business Services
Division of Labor Services
Contract Compliance Unit
110 William Street
New York, New York 10038
Phone: (212) 513 - 6323
Fax: (212) 618-8879

CONSTRUCTION EMPLOYMENT REPORT INSTRUCTIONS

WHO MUST FILE A CONSTRUCTION EMPLOYMENT REPORT

A Construction Employment Report (ER) must be filed if you meet the following conditions:

CONTRACT FUNDING SOURCE	CONTRACTOR	CONTRACT VALUE	SUBMISSION REQUIREMENT
Federal/Federally assisted	Prime and subcontractors	$10,000 or greater	Construction Employment Report
City and state funded	Prime contractor	$1,000,000 or greater	
	Subcontractor	$750,000 or greater	
		Less than $750,000	Less than $750,000 Certificate (City/State Only)

Prime Contractor:

- A general contractor or construction manager selected to perform work on a construction project funded (in whole or in part) by the federal government with a proposed contract value of $10,000 or more.
- A general contractor or construction manager selected to perform work on a construction project funded or assisted by the City of New York with a proposed contract value of $1,000,000 or more.

Subcontractor:

- A subcontractor selected to perform work on a construction project funded (in whole or in part) by the federal government with a proposed contract value of $10,000 or more.
- A subcontractor selected to perform work on a construction project funded or assisted by the City of New York with a proposed contract value of $750,000 or more.
- A subcontractor selected to perform work on a construction project funded or assisted by the City of New York with a proposed contract value of less than $750,000 must submit a "Less than $750,000" certificate.

WHERE TO FILE

Employment Reports must be filed with the City agency awarding the contract. If you are a contractor or subcontractor who will be working for a private developer in receipt of funding or assistance from the City, the ER must be filed with the City agency with jurisdiction over the developer's project.

DLS REVIEW PROCESS

In accordance with Executive Order 50 (EO 50), upon receipt by DLS of a completed ER, DLS conducts a review of the contractor's current employment policies, practices and procedures, as well as perform a statistical analysis of the contractor's workforce, if necessary. The process is as follows:

1. Within five (5) business days, DLS will review the ER for completeness and accuracy. If any information is omitted or incorrect, or if necessary documents are not submitted, the submission shall be deemed incomplete and DLS will inform the contractor. The substantive compliance review does not commence until the submission is complete. **An incomplete submission will delay the review process and may preclude or interrupt the contract approval.**

2. If the ER submission is complete, the compliance review will proceed, resulting in one of the following:

   Certificate of Approval
   The contractor is found to be in compliance with all applicable laws and regulations. The approval is valid for 36 months.

   Continued Approval Certificate
   The contractor has been issued a Certificate of Approval in the previous 36 months which is good for the applicable contract.

   Conditional Certificate of Compliance
   The contractor is required to take corrective actions in order to be in compliance with EO 50. The contractor must meet the conditions within one month of the issue of the Conditional Certificate.

   Determination of Nonperformance
   The contractor has failed to take the required corrective actions stipulated in the Conditional Certificate. A determination of nonperformance may prevent a contractor from receiving an award of a contract.

HOW TO COMPLETE THE EMPLOYMENT REPORT

Contents

General Information
Part I: Contractor/Subcontractor Information
Part II: Employment Policies and Practices
Part III: Contract Bid Information and Projected and Current Workforce Forms
Signature Page

PART I: CONTRACTOR/SUBCONTRACTOR INFORMATION

Questions 7 – 11: Please provide the required contact information for your company. All contracts must have a designated Equal Employment Officer.

Question 12: If you are a subcontractor, you must state the name of the contractor for whom you are providing the construction services.

Question 13: Please provide the number of permanent employees in your company.

Question 14a-g: The Project Identification Number (PIN) and the Contract Registration ID Number (CT#) can be obtained from the City agency. Provide a description of the trade work you will perform on this project and the address where the work will be performed. Subcontractors can obtain this information from the contract they have with the prime contractor.

Questions 15 – 18: If your company has received a valid Certificate of Approval within the past 36 months, been audited by the United States Department of Labor, Office of Federal Contract Compliance Programs (OFCCP), or if your company has submitted an ER for a different contract for which you have not yet received a compliance certificate, then you only need to complete and submit the following:

- General Information section
- Part I - Contractor/Subcontractor Information
- Form B - Projected Workforce
- Signature Page

If your company is currently waiting for an approval on another contract previously submitted, be certain to identify the date on which you submitted the completed Employment Report, the name of the City contracting agency with which the contract was made, and the name and telephone number of the person to whom the Employment Report was submitted.

If your company was issued a Conditional Certificate of Approval, all required corrective actions must have been taken or DLS will not issue a Continued Certificate.

Question 18: If the company was audited by the OFCCP, also provide the following:

- Identify the reviewing OFCCP office by its name and address
- If an unconditional certificate of compliance was issued by the OFCCP, attach a copy of the certificate in lieu of completing Parts II and III;
- Include copies of all corrective actions and documentation of OFCCP's performance; and
- Provide a copy of all stated OFCCP findings.

Question 19: Please provide a copy of any Collective Bargaining Agreement(s) which is negotiated through an employer trade association on behalf of your organization or any of its affiliates.

PART II: EMPLOYMENT POLICIES AND PRACTICES

Remember to label all documents with the question number for which they are submitted.

Questions 20a – j: You must respond to the questions as to whether or not your firm has documents reflecting written policies, benefits and procedures. If so, then you must identify by name each document in which the policy(ies), procedure(s) and benefit(s) is located and submit copies of all of the document(s). If your firm follows unwritten practices or procedures, include an explanation of how they operate. Please submit the most current document(s), including all applicable amendments. Label each document and/or unwritten practice according to the question to which it corresponds (e.g. 20a, 20b, etc.)

Questions 21a – h: Inquires about the manner/methods by which you comply with the requirements of the Immigration Reform and Control Act of 1986 (IRCA).

Question 22: Inquires into where and how I-9 forms are maintained and stored.

Questions 23a – e: Inquires into whether or not there is a requirement that an applicant or employee be subjected to a medical examination at any given time. Copes of the medical information questionnaire and instructions must be submitted with the Employment Report.

Question 24: Indicate the existence and location of all statements of your firm's Equal Employment Opportunity policy and attach a copy of each statement.

Question 25: Submit any current Affirmative Action Plan(s) created pursuant to Executive Order 11246.

Question 26: If your firm or collective bargaining agreement has an internal grievance procedure, indicate this and submit a copy of the policy and procedure. If unwritten, explain its nature and operation. Explain how your firm's procedure addresses EEO complaints.

Question 27: If your employees have used the procedure in the last three (3) years, please submit an explanation in the format indicated below:

1. Number of complaint(s)	2. Nature of the complaint(s)	3. Position(s) of the complainant(s)	4. Was an investigation conducted? Y/N	5. Current status of the disposition

Question 28: Indicate whether in the past three (3) years complaints have been filed with a court of law or administrative agency, naming your company as a defendant (or respondent) in a complaint alleging violation of any anti-discrimination or affirmative action laws. If yes, develop and submit a log to show, for each administrative/and or judicial action filed, the following information:

1. Name(s) of complainant(s)	2. Administrative agency or court in which action was filed	3. Nature of the complaint(s)	4. Current status	5. If not pending, the complaint's disposition

Question 29: Identify each job for which a physical qualification exists. Identify and explain the physical qualification(s) for each stated job. Submit job descriptions for each job and the reasons for the qualifications.

Question 30: Identify each job for which there exists any qualification related to age, race, color, national origin, sex, creed, disability, marital status, sexual orientation or citizenship status. Identify and explain the specific related qualification for each job stated. Submit job descriptions for each job and the reasons for the qualifications.

PART III: CONTRACT BID INFORMATION AND PROJECTED AND CURRENT WORKFORCE FORMS

FORM A: CONTRACT BID INFORMATION – USE OF SUBCONTRACTORS/TRADES

Your projections for the utilization of subcontractors on the proposed contract are to be provided in this section. A chart has been provided for the identification of subcontractors. Information is to be provided to the extent known at the time the ER is filed for review by DLS. If the subcontractor's name is unknown, then write "unknown". Under "ownership", enter the appropriate race/ethnic and gender code. If the contract is federally funded or assisted and the subcontractor is being utilized in accordance with applicable federal requirements with respect to Minority Business Enterprise or Woman Business Enterprise requirements, enter the appropriate code. This will also apply to state funded contracts with similar requirements for minority and female owned businesses.

FORM B: PROJECTED WORKFORCE FOR WORK TO BE PERFORMED ON THIS PROJECT

For each trade to be engaged by your company for this project, enter the projected workforce for Males and Females by trade classification in the charts provided.

FORM C: CURRENT WORKFORCE FOR WORK TO BE PERFORMED ON THIS PROJECT

For each trade *currently* engaged by your company for all work performed in NYC, enter the current workforce for Males and Females by trade classification in the charts provided.

SIGNATURE PAGE

The signatory of this Employment Report and all other documents submitted to DLS must be an official authorized to enter into a binding legal agreement. The signature page must be completed in its entirety and notarized. Only original signatures will be accepted.

The City of New York Department of Small Business Services
Division of Labor Services Contract Compliance Unit
110 William Street, New York, New York 10038
Phone: (212) 513 - 6323
Fax: (212) 618-8879

CONSTRUCTION EMPLOYMENT REPORT

GENERAL INFORMATION

1. Your contractual relationship in this contract is: Prime contractor_x_ Subcontractor____

1a. Are M/WBE goals attached to this project? Yes ____ No ____

2. Please check one of the following if your firm would like information on how to certify with the City of New York as a:

___Minority Owned Business Enterprise
___Women Owned Business Enterprise
___Disadvantaged Business Enterprise
___Locally Based Business Enterprise
___Emerging Business Enterprise

2a. If you are certified as an **MBE**, **WBE**, **LBE, EBE** or **DBE**, what city/state agency are you certified with? _____ Are you DBE certified? Yes ____ No ____

3. Please indicate if you would like assistance from SBS in identifying certified M/WBEs for contracting opportunities: Yes___ No___

4. Is this project subject to a project labor agreement? Yes ____ No ____

5. Are you a Union contractor? Yes ____ No ____ If yes, please list which local(s) you affiliated with _____

6. Are you a Veteran owned company? Yes ____ No ____

PART I: CONTRACTOR/SUBCONTRACTOR INFORMATION

7. _____
Employer Identification Number or Federal Tax I.D. Email Address

8. _____
Company Name

9. _____
Company Address and Zip Code

10. _____
Chief Operating Officer Telephone Number

11. _____
Designated Equal Opportunity Compliance Officer Telephone Number
(If same as Item #10, write "same")

12. _____
Name of Prime Contractor and Contact Person
(If same as Item #8, write "same")

13. Number of employees in your company: _____

14. Contract information:

(a) _____ Contracting Agency (City Agency)

(b) _____ Contract Amount

(c) _____ Procurement Identification Number (PIN)

(d) _____ Contract Registration Number (CT#)

(e) _____ Projected Commencement Date

(f) _____ Projected Completion Date

(g) Description and location of proposed contract:

_____

_____

15. Has your firm been reviewed by the Division of Labor Services (DLS) within the past 36 months and issued a Certificate of Approval? Yes___ No___

If yes, attach a copy of certificate.

16. Has DLS within the past month reviewed an Employment Report submission for your company and issued a Conditional Certificate of Approval? Yes___ No___

If yes, attach a copy of certificate.

NOTE: DLS WILL NOT ISSUE A CONTINUED CERTIFICATE OF APPROVAL IN CONNECTION WITH THIS CONTRACT UNLESS THE REQUIRED CORRECTIVE ACTIONS IN PRIOR CONDITIONAL CERTIFICATES OF APPROVAL HAVE BEEN TAKEN.

17. Has an Employment Report already been submitted for a different contract (not covered by this Employment Report) for which you have not yet received compliance certificate?
Yes___ No___ If yes,

Date submitted: _____
Agency to which submitted: _____
Name of Agency Person: _____
Contract No: _____
Telephone: _____

18. Has your company in the past 36 months been audited by the United States Department of Labor, Office of Federal Contract Compliance Programs (OFCCP)? Yes___ No___

If yes,

(a) Name and address of OFCCP office.

_____

_____

(b) Was a Certificate of Equal Employment Compliance issued within the past 36 months? Yes___ No___

If yes, attach a copy of such certificate.

(c) Were any corrective actions required or agreed to? Yes___ No___

If yes, attach a copy of such requirements or agreements.

(d) Were any deficiencies found? Yes___ No___

If yes, attach a copy of such findings.

19. Is your company or its affiliates a member or members of an employers' trade association which is responsible for negotiating collective bargaining agreements (CBA) which affect construction site hiring? Yes___ No___

If yes, attach a list of such associations and all applicable CBA's.

PART II: DOCUMENTS REQUIRED

20. For the following policies or practices, attach the relevant documents (e.g., printed booklets, brochures, manuals, memoranda, etc.). If the policy(ies) are unwritten, attach a full explanation of the practices. See instructions.

___ (a) Health benefit coverage/description(s) for all management, nonunion and union employees (whether company or union administered)

___ (b) Disability, life, other insurance coverage/description

___ (c) Employee Policy/Handbook

___ (d) Personnel Policy/Manual

___ (e) Supervisor's Policy/Manual

___ (f) Pension plan or 401k coverage/description for all management, nonunion and union employees, whether company or union administered

___ (g) Collective bargaining agreement(s).

___ (h) Employment Application(s)

___ (i) Employee evaluation policy/form(s).

___ (j) Does your firm have medical and/or non-medical (i.e. education, military, personal, pregnancy, child care) leave policy?

21. To comply with the Immigration Reform and Control Act of 1986 when and of whom does your firm require the completion of an I-9 Form?

(a) Prior to job offer	Yes___ No___
(b) After a conditional job offer	Yes___ No___
(c) After a job offer	Yes___ No___
(d) Within the first three days on the job	Yes___ No___
(e) To some applicants	Yes___ No___
(f) To all applicants	Yes___ No___
(g) To some employees	Yes___ No___
(h) To all employees	Yes___ No___

22. Explain where and how completed I-9 Forms, with their supportive documentation, are maintained and made accessible.

_____

_____

23. Does your firm or any of its collective bargaining agreements require job applicants to take a medical examination? Yes___ No___

If yes, is the medical examination given:

(a) Prior to a job offer	Yes___ No___
(b) After a conditional job offer	Yes___ No___
(c) After a job offer	Yes___ No___
(d) To all applicants	Yes___ No___
(e) Only to some applicants	Yes___ No___

If yes, list for which applicants below and attach copies of all medical examination or questionnaire forms and instructions utilized for these examinations.

_____

_____

24. Do you have a written equal employment opportunity (EEO) policy? Yes___ No___

If yes, list the document(s) and page number(s) where these written policies are located.

_____

_____

25. Does the company have a current affirmative action plan(s) (AAP)

_____Minorities and Women

_____Individuals with handicaps

_____Other. Please specify _____

26. Does your firm or collective bargaining agreement(s) have an internal grievance procedure with respect to EEO complaints? Yes___ No___

If yes, please attach a copy of this policy.

If no, attach a report detailing your firm's unwritten procedure for handling EEO complaints.

27. Has any employee, within the past three years, filed a complaint pursuant to an internal grievance procedure or with any official of your firm with respect to equal employment opportunity? Yes___ No___

If yes, attach an internal complaint log. See instructions.

28. Has your firm, within the past three years, been named as a defendant (or respondent) in any administrative or judicial action where the complainant (plaintiff) alleged violation of any anti-discrimination or affirmative action laws? Yes___ No___

If yes, attach a log. See instructions.

29. Are there any jobs for which there are physical qualifications? Yes___ No___

If yes, list the job(s), submit a job description and state the reason(s) for the qualification(s).

_____

_____

30. Are there any jobs for which there are age, race, color, national origin, sex, creed, disability, marital status, sexual orientation, or citizenship qualifications? Yes___ No___

If yes, list the job(s), submit a job description and state the reason(s) for the qualification(s).

_____

_____

SIGNATURE PAGE

I, (print name of authorized official signing)_____ hereby certify that the information submitted herewith is true and complete to the best of my knowledge and belief and submitted with the understanding that compliance with New York City's equal employment requirements, as contained in Chapter 56 of the City Charter, Executive Order No. 50 (1980), as amended, and the implementing Rules and Regulations, is a contractual obligation. I also agree on behalf of the company to submit a certified copy of payroll records to the Division of Labor Services on a monthly basis.

_____

Contractor's Name

_____

Name of person who prepared this Employment Report Title

_____

Name of official authorized to sign on behalf of the contractor Title

_____

Telephone Number

_____

Signature of authorized official Date

If contractors are found to be underutilizing minorities and females in any given trade based on Chapter 56 Section 3H, the Division of Labor Services reserves the right to request the contractor's workforce data and to implement an employment program.

Contractors who fail to comply with the above mentioned requirements or are found to be in noncompliance may be subject to the withholding of final payment.

Willful or fraudulent falsifications of any data or information submitted herewith may result in the termination of the contract between the City and the bidder or contractor and in disapproval of future contracts for a period of up to five years. Further, such falsification may result in civil and/and or criminal prosecution.

To the extent permitted by law and consistent with the proper discharge of DLS' responsibilities under Charter Chapter 56 of the City Charter and Executive Order No. 50 (1980) and the implementing Rules and Regulations, all information provided by a contractor to DLS shall be confidential.

Only original signatures accepted.

Sworn to before me this _____ day of _____ 20 _____

_____

Notary Public Authorized Signature Date

FORM A. CONTRACT BID INFORMATION: USE OF SUBCONTRACTORS/TRADES

1. Do you plan to subcontractor work on this contract? Yes___ No___

2. If yes, complete the chart below.

NOTE: All proposed subcontractors with a subcontract in excess of $750,000 must complete an Employment Report for review and approval before the contract may be awarded and work commences.

SUBCONTRACTOR'S NAME*	OWNERSHIP (ENTER APPROPRIATE CODE LETTERS BELOW)	WORK TO BE PERFORMED BY SUBCONTRACTOR	TRADE PROJECTED FOR USE BY SUBCONTRACTOR	PROJECTED DOLLAR VALUE OF SUBCONTRACT

***If subcontractor is presently unknown, please enter the trade (craft name).**

OWNERSHIP CODES
- W: White
- B: Black
- H: Hispanic
- A: Asian
- N: Native American
- F: Female

FORM B: PROJECTED WORKFORCE

TRADE CLASSIFICATION CODES

(J) Journeylevel Workers
(A) Apprentice
(H) Helper
(TRN) Trainee
(TOT) Total by Column

For each trade to be engaged by your company for this project, enter the projected workforce for Males and Females by trade classification on the charts below.

Trade: _____

Union Affiliation, if applicable _____

Total (Col. #1-10): _____

Total Minority, Male & Female (Col. #2,3,4,5,7,8,9, & 10): _____

Total Female (Col. #6 – 10): _____

	MALES					FEMALES				
	(1) White Non Hisp.	(2) Black Non Hisp.	(3) Hisp.	(4) Asian	(5) Native Amer.	(6) White Non Hisp.	(7) Black Non Hisp.	(8) Hisp.	(9) Asian	(10) Native Amer.
J										
H										
A										
TRN										
TOT										

What are the recruitment sources for you projected hires (i.e., unions, government employment office, job tap center, community outreach)?

_____

_____

FOR OFFICIAL USE ONLY: File No._____

FORM B: PROJECTED WORKFORCE

Trade:

_____

Union Affiliation, if applicable

_____

Total (Col. #1-10):

_____

Total Minority, Male & Female (Col. #2,3,4,5,7,8,9, & 10):

_____

Total Female (Col. #6 – 10):

_____

	MALES					FEMALES				
	(1) White Non Hisp.	(2) Black Non Hisp.	(3) Hisp.	(4) Asian	(5) Native Amer.	(6) White Non Hisp.	(7) Black Non Hisp.	(8) Hisp.	(9) Asian	(10) Native Amer.
J										
H										
A										
TRN										
TOT										

What are the recruitment sources for you projected hires (i.e., unions, government employment office, job tap center, community outreach)?

_____

_____

FORM C: CURRENT WORKFORCE

TRADE CLASSIFICATION CODES

(J) Journeylevel Workers
(A) Apprentice
(H) Helper
(TRN) Trainee
(TOT) Total by Column

For each trade currently engaged by your company for all work performed in New York City, enter the current workforce for Males and Females by trade classification on the charts below.

Trade: _____

Union Affiliation, if applicable _____

Total (Col. #1-10): _____

Total Minority, Male & Female (Col. #2,3,4,5,7,8,9, & 10): _____

Total Female (Col. #6 – 10): _____

	MALES					FEMALES				
	(1) White Non Hisp.	(2) Black Non Hisp.	(3) Hisp.	(4) Asian	(5) Native Amer.	(6) White Non Hisp.	(7) Black Non Hisp.	(8) Hisp.	(9) Asian	(10) Native Amer.
J										
H										
A										
TRN										
TOT										

What are the recruitment sources for you projected hires (i.e., unions, government employment office, job tap center, community outreach)?

_____

_____

FOR OFFICIAL USE ONLY: File No._____

FORM C: CURRENT WORKFORCE

Trade: _____

Union Affiliation, if applicable _____

Total (Col. #1-10): _____

Total Minority, Male & Female (Col. #2,3,4,5,7,8,9, & 10): _____

Total Female (Col. #6 – 10): _____

	MALES					FEMALES				
	(1) White Non Hisp.	(2) Black Non Hisp.	(3) Hisp.	(4) Asian	(5) Native Amer.	(6) White Non Hisp.	(7) Black Non Hisp.	(8) Hisp.	(9) Asian	(10) Native Amer.
J										
H										
A										
TRN										
TOT										

What are the recruitment sources for you projected hires (i.e., unions, government employment office, job tap center, community outreach)?

_____

_____

(NO TEXT ON THIS PAGE)

The City of New York Department of Small Business Services
Division of Labor Services Contract Compliance Unit
110 William Street, New York, New York 10038
Phone: (212) 513 - 6323
Fax: (212) 618-8879

CONSTRUCTION EMPLOYMENT REPORT

GENERAL INFORMATION

1. Your contractual relationship in this contract is: Prime contractor____ Subcontractor_x_

1a. Are M/WBE goals attached to this project? Yes ____ No ____

2. Please check one of the following if your firm would like information on how to certify with the City of New York as a:

___Minority Owned Business Enterprise
___Women Owned Business Enterprise
___Disadvantaged Business Enterprise
___Locally Based Business Enterprise
___Emerging Business Enterprise

2a. If you are certified as an **MBE**, **WBE**, **LBE, EBE** or **DBE**, what city/state agency are you certified with? _____ Are you DBE certified? Yes ____ No ____

3. Please indicate if you would like assistance from SBS in identifying certified M/WBEs for contracting opportunities: Yes___ No___

4. Is this project subject to a project labor agreement? Yes ____ No ____

5. Are you a Union contractor? Yes ____ No ____ If yes, please list which local(s) you affiliated with _____

6. Are you a Veteran owned company? Yes ____ No ____

PART I: CONTRACTOR/SUBCONTRACTOR INFORMATION

7. _____
Employer Identification Number or Federal Tax I.D. Email Address

8. _____
Company Name

9. _____
Company Address and Zip Code

10. _____
Chief Operating Officer Telephone Number

11. _____
Designated Equal Opportunity Compliance Officer Telephone Number
(If same as Item #10, write "same")

12. _____
Name of Prime Contractor and Contact Person
(If same as Item #8, write "same")

13. Number of employees in your company: _____

14. Contract information:

(a) _____ Contracting Agency (City Agency)

(b) _____ Contract Amount

(c) _____ Procurement Identification Number (PIN)

(d) _____ Contract Registration Number (CT#)

(e) _____ Projected Commencement Date

(f) _____ Projected Completion Date

(g) Description and location of proposed contract:

_____

_____

15. Has your firm been reviewed by the Division of Labor Services (DLS) within the past 36 months and issued a Certificate of Approval? Yes___ No___

If yes, attach a copy of certificate.

16. Has DLS within the past month reviewed an Employment Report submission for your company and issued a Conditional Certificate of Approval? Yes___ No___

If yes, attach a copy of certificate.

NOTE: DLS WILL NOT ISSUE A CONTINUED CERTIFICATE OF APPROVAL IN CONNECTION WITH THIS CONTRACT UNLESS THE REQUIRED CORRECTIVE ACTIONS IN PRIOR CONDITIONAL CERTIFICATES OF APPROVAL HAVE BEEN TAKEN.

17. Has an Employment Report already been submitted for a different contract (not covered by this Employment Report) for which you have not yet received compliance certificate?
Yes___ No___ If yes,

Date submitted: _____
Agency to which submitted: _____
Name of Agency Person: _____
Contract No: _____
Telephone: _____

18. Has your company in the past 36 months been audited by the United States Department of Labor, Office of Federal Contract Compliance Programs (OFCCP)? Yes___ No___

If yes,

(a) Name and address of OFCCP office.

_____

_____

(b) Was a Certificate of Equal Employment Compliance issued within the past 36 months? Yes___ No___

If yes, attach a copy of such certificate.

(c) Were any corrective actions required or agreed to? Yes___ No___

If yes, attach a copy of such requirements or agreements.

(d) Were any deficiencies found? Yes___ No___

If yes, attach a copy of such findings.

19. Is your company or its affiliates a member or members of an employers' trade association which is responsible for negotiating collective bargaining agreements (CBA) which affect construction site hiring? Yes___ No___

If yes, attach a list of such associations and all applicable CBA's.

PART II: DOCUMENTS REQUIRED

20. For the following policies or practices, attach the relevant documents (e.g., printed booklets, brochures, manuals, memoranda, etc.). If the policy(ies) are unwritten, attach a full explanation of the practices. See instructions.

___ (a) Health benefit coverage/description(s) for all management, nonunion and union employees (whether company or union administered)

___ (b) Disability, life, other insurance coverage/description

___ (c) Employee Policy/Handbook

___ (d) Personnel Policy/Manual

___ (e) Supervisor's Policy/Manual

___ (f) Pension plan or 401k coverage/description for all management, nonunion and union employees, whether company or union administered

___ (g) Collective bargaining agreement(s).

___ (h) Employment Application(s)

___ (i) Employee evaluation policy/form(s).

___ (j) Does your firm have medical and/or non-medical (i.e. education, military, personal, pregnancy, child care) leave policy?

21. To comply with the Immigration Reform and Control Act of 1986 when and of whom does your firm require the completion of an I-9 Form?

(a) Prior to job offer	Yes___ No___
(b) After a conditional job offer	Yes___ No___
(c) After a job offer	Yes___ No___
(d) Within the first three days on the job	Yes___ No___
(e) To some applicants	Yes___ No___
(f) To all applicants	Yes___ No___
(g) To some employees	Yes___ No___
(h) To all employees	Yes___ No___

22. Explain where and how completed I-9 Forms, with their supportive documentation, are maintained and made accessible.

_____

_____

23. Does your firm or any of its collective bargaining agreements require job applicants to take a medical examination? Yes___ No___

If yes, is the medical examination given:

(a) Prior to a job offer	Yes___ No___
(b) After a conditional job offer	Yes___ No___
(c) After a job offer	Yes___ No___
(d) To all applicants	Yes___ No___
(e) Only to some applicants	Yes___ No___

If yes, list for which applicants below and attach copies of all medical examination or questionnaire forms and instructions utilized for these examinations.

_____

_____

24. Do you have a written equal employment opportunity (EEO) policy? Yes___ No___

If yes, list the document(s) and page number(s) where these written policies are located.

_____

_____

25. Does the company have a current affirmative action plan(s) (AAP)

_____Minorities and Women

_____Individuals with handicaps

_____Other. Please specify _____

26. Does your firm or collective bargaining agreement(s) have an internal grievance procedure with respect to EEO complaints? Yes___ No___

If yes, please attach a copy of this policy.

If no, attach a report detailing your firm's unwritten procedure for handling EEO complaints.

27. Has any employee, within the past three years, filed a complaint pursuant to an internal grievance procedure or with any official of your firm with respect to equal employment opportunity? Yes___ No___

If yes, attach an internal complaint log. See instructions.

28. Has your firm, within the past three years, been named as a defendant (or respondent) in any administrative or judicial action where the complainant (plaintiff) alleged violation of any anti-discrimination or affirmative action laws? Yes___ No___

If yes, attach a log. See instructions.

29. Are there any jobs for which there are physical qualifications? Yes___ No___

If yes, list the job(s), submit a job description and state the reason(s) for the qualification(s).

_____

_____

30. Are there any jobs for which there are age, race, color, national origin, sex, creed, disability, marital status, sexual orientation, or citizenship qualifications? Yes___ No___

If yes, list the job(s), submit a job description and state the reason(s) for the qualification(s).

_____

_____

SIGNATURE PAGE

I, (print name of authorized official signing)_____ hereby certify that the information submitted herewith is true and complete to the best of my knowledge and belief and submitted with the understanding that compliance with New York City's equal employment requirements, as contained in Chapter 56 of the City Charter, Executive Order No. 50 (1980), as amended, and the implementing Rules and Regulations, is a contractual obligation. I also agree on behalf of the company to submit a certified copy of payroll records to the Division of Labor Services on a monthly basis.

_____

Contractor's Name

_____

Name of person who prepared this Employment Report Title

_____

Name of official authorized to sign on behalf of the contractor Title

_____

Telephone Number

_____

Signature of authorized official Date

If contractors are found to be underutilizing minorities and females in any given trade based on Chapter 56 Section 3H, the Division of Labor Services reserves the right to request the contractor's workforce data and to implement an employment program.

Contractors who fail to comply with the above mentioned requirements or are found to be in noncompliance may be subject to the withholding of final payment.

Willful or fraudulent falsifications of any data or information submitted herewith may result in the termination of the contract between the City and the bidder or contractor and in disapproval of future contracts for a period of up to five years. Further, such falsification may result in civil and/and or criminal prosecution.

To the extent permitted by law and consistent with the proper discharge of DLS' responsibilities under Charter Chapter 56 of the City Charter and Executive Order No. 50 (1980) and the implementing Rules and Regulations, all information provided by a contractor to DLS shall be confidential.

Only original signatures accepted.

Sworn to before me this _____ day of _____ 20 _____

_____

Notary Public Authorized Signature Date

FORM A. CONTRACT BID INFORMATION: USE OF SUBCONTRACTORS/TRADES

1. Do you plan to subcontractor work on this contract? Yes___ No___

2. If yes, complete the chart below.

NOTE: All proposed subcontractors with a subcontract in excess of $750,000 must complete an Employment Report for review and approval before the contract may be awarded and work commences.

SUBCONTRACTOR'S NAME*	OWNERSHIP (ENTER APPROPRIATE CODE LETTERS BELOW)	WORK TO BE PERFORMED BY SUBCONTRACTOR	TRADE PROJECTED FOR USE BY SUBCONTRACTOR	PROJECTED DOLLAR VALUE OF SUBCONTRACT

***If subcontractor is presently unknown, please enter the trade (craft name).**

OWNERSHIP CODES
- W: White
- B: Black
- H: Hispanic
- A: Asian
- N: Native American
- F: Female

FORM B: PROJECTED WORKFORCE

TRADE CLASSIFICATION CODES

(J) Journeylevel Workers
(A) Apprentice
(H) Helper
(TRN) Trainee
(TOT) Total by Column

For each trade to be engaged by your company for this project, enter the projected workforce for Males and Females by trade classification on the charts below.

Trade: _____

Union Affiliation, if applicable _____

Total (Col. #1-10): _____

Total Minority, Male & Female (Col. #2,3,4,5,7,8,9, & 10): _____

Total Female (Col. #6 – 10): _____

	MALES					FEMALES				
	(1) White Non Hisp.	(2) Black Non Hisp.	(3) Hisp.	(4) Asian	(5) Native Amer.	(6) White Non Hisp.	(7) Black Non Hisp.	(8) Hisp.	(9) Asian	(10) Native Amer.
J										
H										
A										
TRN										
TOT										

What are the recruitment sources for you projected hires (i.e., unions, government employment office, job tap center, community outreach)?

_____

_____

FOR OFFICE USE ONLY: File No._____

FORM B: PROJECTED WORKFORCE

Trade:

_____

Union Affiliation, if applicable

_____

Total (Col. #1-10):

_____

Total Minority, Male & Female (Col. #2,3,4,5,7,8,9, & 10):

_____

Total Female (Col. #6 – 10):

_____

	MALES					FEMALES				
	(1) White Non Hisp.	(2) Black Non Hisp.	(3) Hisp.	(4) Asian	(5) Native Amer.	(6) White Non Hisp.	(7) Black Non Hisp.	(8) Hisp.	(9) Asian	(10) Native Amer.
J										
H										
A										
TRN										
TOT										

What are the recruitment sources for you projected hires (i.e., unions, government employment office, job tap center, community outreach)?

_____

_____

FORM C: CURRENT WORKFORCE

TRADE CLASSIFICATION CODES

(J) Journeylevel Workers
(A) Apprentice
(H) Helper
(TRN) Trainee
(TOT) Total by Column

For each trade currently engaged by your company for all work performed in New York City, enter the current workforce for Males and Females by trade classification on the charts below.

Trade: _____

Union Affiliation, if applicable _____

Total (Col. #1-10): _____

Total Minority, Male & Female (Col. #2,3,4,5,7,8,9, & 10): _____

Total Female (Col. #6 – 10): _____

	MALES					FEMALES				
	(1) White Non Hisp.	(2) Black Non Hisp.	(3) Hisp.	(4) Asian	(5) Native Amer.	(6) White Non Hisp.	(7) Black Non Hisp.	(8) Hisp.	(9) Asian	(10) Native Amer.
J										
H										
A										
TRN										
TOT										

What are the recruitment sources for you projected hires (i.e., unions, government employment office, job tap center, community outreach)?

_____

_____

FOR OFFICIAL USE ONLY: File No._____

FORM C: CURRENT WORKFORCE

Trade: _____

Union Affiliation, if applicable _____

Total (Col. #1-10): _____

Total Minority, Male & Female (Col. #2,3,4,5,7,8,9, & 10): _____

Total Female (Col. #6 – 10): _____

	MALES					FEMALES				
	(1) White Non Hisp.	(2) Black Non Hisp.	(3) Hisp.	(4) Asian	(5) Native Amer.	(6) White Non Hisp.	(7) Black Non Hisp.	(8) Hisp.	(9) Asian	(10) Native Amer.
J										
H										
A										
TRN										
TOT										

What are the recruitment sources for you projected hires (i.e., unions, government employment office, job tap center, community outreach)?

_____

_____

(NO TEXT ON THIS PAGE)

FOR OFFICE USE ONLY: File No._____

The City of New York Department of Small Business Services
Division of Labor Services Contract Compliance Unit
110 William Street, New York, New York 10038
Phone: (212) 513 – 6323 Fax: (212) 618-8879

Date _____ **File Number** _____

LESS THAN $750,000 SUBCONTRACT CERTIFICATE (CITY, STATE AND ICIP ONLY)

Are you currently certified as one of the following? Please check yes or no:

MBE Yes ___No ___ WBE Yes ___No ___ LBE Yes ___No ___

DBE Yes___No___ EBE Yes ___ No ___

If you are certified as an MBE, WBE, LBE, EBE or DBE, what city/state agency are you certified with?

_____

Please check one of the following if your firm would like information on how to certify with the City of New York as a:

___Minority Owned Business Enterprise ___Locally based Business Enterprise

___Women Owned Business Enterprise ___Emerging Business Enterprise

___Disadvantaged Business Enterprise

_____
Company Name Employer Identification Number or Federal Tax I.D

_____
Company Address and Zip Code

_____
Contact Person (First Name, Last Name) Telephone Number

_____
Fax Number E-mail Address

Description and location of proposed subcontract:_____
_____
_____

Are you a Union contractor? Yes ____ No ____ If yes, please list which local(s) you affiliated with

_____

Are you a Veteran owned company? Yes ____ No ____

_____ _____
Procurement Identification Number (PIN) Contract Registration Number (CT#)
(City contracts only) (City contracts only)

Revised 8/13
FOR OFFICIAL USE ONLY: File No._____

Block and Lot Number
(ICIP projects only)

Contract Amount

I, (print name of authorized official signing)_____ hereby certify that I am authorized by the above-named subcontractor to certify that said subcontractor's proposed contract with the above named owner or City agency is less than $750,000. This affirmation is made in accordance with NYC Charter Chapter 56, Executive Order No. 50 (1980) and the implementing Rules.

Willful or fraudulent falsifications of any data or information submitted herewith may result in the termination of the contract between the City and the bidder or contractor and in disapproval of future contracts for a period of up to five years. Further, such falsification may result in civil and/and or criminal prosecution.

Signature of authorized official

Date

Only original signatures accepted.

Sworn to before me this _____ day of _____ 20 _____

Notary Public

Authorized Signature

Date

FOR OFFICIAL USE ONLY: File No._____

ATTACH TO CONTRACT DOCUMENTS

THE CITY OF NEW YORK
DEPARTMENT OF DESIGN AND CONSTRUCTION

DIVISION OF INFRASTRUCTURE
BUREAU OF DESIGN

PROJECT ID: HWXP136B

RECONSTRUCTION OF GRAND CONCOURSE SERVICE ROADS,
RESURFACING OF THE MAIN ROADWAY AND WIDENING OF MEDIANS
FROM EAST 171ST STREET TO EAST 175TH STREET

INCLUDING SEWER, WATER MAIN, STREET LIGHTING, AND TRAFFIC SIGNAL WORK

Together With All Work Incidental Thereto

BOROUGH OF THE BRONX
CITY OF NEW YORK

ADDENDUM NO. 1

DATED: September 23, 2016

THIS ADDENDUM IS HEREBY MADE A PART OF THE CONTRACT DOCUMENTS

1. Refer to the Bid and Contract Documents, Volume 3 of 3, I-PAGES, pages I-25 through I-48;
   Delete pages I-25 through I-48, in their entirety;

2. For additional information, see the attached 1(one) page of "Questions Submitted by Bidders and DDC's Responses".

By signing in the space provided below, the bidder acknowledges receipt of this Addendum consisting of one (1) page, one(1) page of attcahments.

THIS ADDENDUM MUST BE SIGNED BY ALL BIDDERS AND ATTACHED TO THEIR BIDS.

for Purnima Dhalla
Mohsen Zargarelahi, P.E.
Assistant Commissioner

M Asphalt Inc
Name of Bidder

By: _____

CITY OF NEW YORK
DEPARTMENT OF DESIGN AND CONSTRUCTION
DIVISION OF INFRASTRUCTURE

ADDENDA CONTROL SHEET

BID OPENING DATE: September 30, 2016

PROJECT NO.: HWXP136B

TITLE: RECONSTRUCTION OF OF GRAND CONCOURSE SERVICE ROADS

ADDENDA ISSUED	No. OF DRAWINGS	DATE
#1: Additional Amendments	0	09/23/2016

Department of Design and Construction

INFRASTRUCTURE DIVISION
BUREAU OF DESIGN

VOLUME 1 OF 3

PROJECT ID: HWXP136B

RECONSTRUCTION OF GRAND CONCOURSE SERVICE ROADS, RESURFACING OF THE MAIN ROADWAY AND WIDENING OF MEDIANS FROM EAST 171ST STREET TO EAST 175TH STREET

INCLUDING SEWER, WATER MAIN, STREET LIGHTING, AND TRAFFIC SIGNAL WORK

Together With All Work Incidental Thereto

BOROUGH OF THE BRONX
CITY OF NEW YORK

_____

Contractor.

_____

Dated_____, 20____

_____

Department of Design and Construction

THE CITY OF NEW YORK
DEPARTMENT OF DESIGN AND CONSTRUCTION
DIVISION OF INFRASTRUCTURE

30-30 THOMSON AVENUE
LONG ISLAND CITY, NEW YORK 11101-3045
TELEPHONE (718) 391-1000
WEBSITE www.nyc.gov/buildnyc

VOLUME 2 OF 3

INFORMATION FOR BIDDERS
CONTRACT
PERFORMANCE AND PAYMENT BONDS
PREVAILING WAGE SCHEDULE

FOR FURNISHING ALL LABOR AND MATERIALS NECESSARY AND REQUIRED FOR:

PROJECT ID: HWXP136B

RECONSTRUCTION OF GRAND CONCOURSE SERVICE ROADS, RESURFACING OF THE MAIN ROADWAY AND WIDENING OF MEDIANS FROM EAST 171ST STREET TO EAST 175TH STREET

INCLUDING SEWER, WATER MAIN, STREET LIGHTING, AND TRAFFIC SIGNAL WORK

Together With All Work Incidental Thereto

BOROUGH OF THE BRONX
CITY OF NEW YORK

FOR THE DEPARTMENT OF TRANSPORTATION
PREPARED BY IN-HOUSE DESIGN

JULY 25, 2016

NYSDOT PIN X761.16
Fed. Aid Project No. _____

Bid Opening 11:00 A.M. on _____
Location 1st Floor Bid Room, 30-30 Thomson Ave., Long Island City, N.Y. 11101

17-009

Department of Design and Construction

THE CITY OF NEW YORK
DEPARTMENT OF DESIGN AND CONSTRUCTION
DIVISION OF INFRASTRUCTURE

30-30 THOMSON AVENUE
LONG ISLAND CITY, NEW YORK 11101-3045
TELEPHONE (718) 391-1000
WEBSITE www.nyc.gov/buildnyc

VOLUME 2 OF 3

INFORMATION FOR BIDDERS
CONTRACT
PERFORMANCE AND PAYMENT BONDS
PREVAILING WAGE SCHEDULE

FOR FURNISHING ALL LABOR AND MATERIALS NECESSARY AND REQUIRI

PROJECT ID:

FOR THE DEPARTMENT OF TRANSPORTATION
PREPARED BY

July 1, 2015

HIRING AND EMPLOYMENT RIDER:

HIRENYC AND REPORTING REQUIREMENTS

Introduction

This Rider shall apply to all contracts for goods, services, and construction with a value of one million dollars ($1,000,000.00) or more, provided, however, that certain requirements of the Rider shall only apply as indicated below. This Rider addresses the HireNYC process, including reporting obligations under the HireNYC process, and certain other reporting requirements imposed by law. In general, the HireNYC process under this Rider requires the Contractor to enroll with the HireNYC portal for the City of New York ("the City") found within the Department of Small Business Services's ("SBS") website, to disclose all entry to mid-level job opportunities described in this Rider arising from this contract and located in New York City, and to agree to interview qualified candidates from HireNYC for those opportunities.

HireNYC Requirements

A. Enrollment

The Contractor shall enroll with the HireNYC system, found at www.nyc.gov/sbs, within thirty (30) days after the registration of this Contract pursuant to Section 328 of the New York City Charter. The Contractor shall provide information about the business, designate a primary contact and say whether it intends to hire for any entry to mid-level job opportunities arising from this contract and located in New York City, and, if so, the approximate start date of the first hire.

B. Job Posting Requirements

Once enrolled in HireNYC, the Contractor agrees to update the HireNYC portal with all entry to mid-level job opportunities arising from this contract and located in New York City, if any, which shall be defined as jobs requiring no more than an associate degree, as provided by the New York State Department of Labor (see Column F of https://labor.ny.gov/stats/2012-2022-NYS-Employment-Prospects.xls). The information to be updated includes the types of entry and mid-level positions made available from the work arising from the contract and located in New York City, the number of positions, the anticipated schedule of initiating the hiring process for these positions, and the contact information for the Contractor's representative charged with overseeing hiring. The Contractor must update the HireNYC portal with any hiring needs arising from the contract and located in New York City, and the requirements of the jobs to be filled, no less than three weeks prior to the intended first day of employment for each new position, except with the permission of SBS, not to be unreasonably withheld, and must also update the HireNYC portal as set forth below.

After enrollment through HireNYC and submission of relevant information, SBS will work with the Contractor to develop a recruitment plan which will outline the candidate screening process,

and will provide clear instructions as to when, where, and how interviews will take place. HireNYC will screen applicants based on employer requirements and refer applicants whom it believes are qualified to the Contractor for interviews. The Contractor must interview referred applicants whom it believes are qualified.

After completing an interview of a candidate referred by HireNYC, the Contractor must provide feedback via the portal within twenty (20) business days to indicate which candidates were interviewed and hired, if any. In addition, the Contractor shall provide the start date of new hires, and additional information reasonably related to such hires, within twenty (20) business days after the start date. In the event the Contractor does not have any job openings covered by this Rider in any given year, the Contractor shall be required to provide an annual update to HireNYC to that effect. For this purpose, the reporting year shall run from the date of the registration of the contract and each anniversary date.

These requirements do not limit the Contractor's ability to assess the qualifications of prospective workers, and to make final hiring and retention decisions. No provision of this Rider shall be interpreted so as to require the Contractor to employ any particular worker.

In addition, the provisions of this Rider shall not apply to positions that the Contractor intends to fill with employees employed pursuant to the job retention provision of Section 22-505 of the Administrative Code of the City of New York. The Contractor shall not be required to report such openings with HireNYC. However, the Contractor shall enroll with the HireNYC system pursuant to Section A, above, and, if such positions subsequently become open, then the remaining provisions of this Rider will apply.

C. Breach and Liquidated Damages

If the Contractor fails to comply with the terms of the contract and this Rider (1) by not enrolling its business with HireNYC; (2) by not informing HireNYC, as required, of open positions; or (3) by failing to interview a qualified candidate, the contracting agency may assess liquidated damages in the amount of two-thousand five hundred dollars ($2,500.00) per breach. For all other events of noncompliance with the terms of this Rider, the agency may assess liquidated damages in the amount of five hundred dollars ($500) per breach.

Furthermore, in the event the Contractor breaches the requirements of this Rider during the term of the contract, the City may hold the Contractor in default of this contract.

Audit Compliance

In addition to the auditing requirements set forth in other parts of the contract, the Contractor shall permit SBS and the City to inspect any and all records concerning or relating to job openings or the hiring of individuals for work arising from the contract and located in New York City. The Contractor shall permit an inspection within seven (7) business days of the request.

Other Reporting Requirements

The Contractor shall report to the City, on a monthly basis, all information reasonably requested by the City that is necessary for the City to comply with any reporting requirements imposed by law or rule, including any requirement that the City maintain a publicly accessible database. In addition, the Contractor agrees to comply with all reporting requirements imposed by law or rule, or as otherwise requested by the City.

Construction Requirements

Construction contractors shall comply with the HireNYC requirements set forth above for all non-trades jobs (e.g., for an administrative position arising out of the work of the contract and located in New York City) as set forth above.

In addition, construction contractors shall reasonably cooperate with SBS and the City on specific outreach events, including Hire on the Spot events, for the hiring of trades workers for the work of this contract.

Further, this contract shall be subject to a project labor agreement if so required elsewhere in this contract.

Federal Hiring Requirements

The Contractor shall comply with all federal hiring requirements as may be set forth elsewhere in this contract, including, as applicable:

- Section 3 of the HUD Act of 1968, which requires, to the greatest extent feasible, economic opportunities for 30 percent of new hires be given to low- and very low-income persons, particularly persons who are recipients of HUD assistance for housing.

- Executive Order 11246, which prohibits discrimination in employment due to race, color, religion, sex or national origin, and requires the implementation of goals for minority and female participation for work involving any Construction trade.

(NO TEXT ON THIS PAGE)

PAID SICK LEAVE LAW CONTRACT RIDER

Introduction and General Provisions

The Earned Sick Time Act, also known as the Paid Sick Leave Law ("PSLL"), requires covered employees who annually perform more than 80 hours of work in New York City to be provided with paid sick time.[1] Contractors of the City of New York or of other governmental entities may be required to provide sick time pursuant to the PSLL.

The PSLL became effective on April 1, 2014, and is codified at Title 20, Chapter 8, of the New York City Administrative Code. It is administered by the City's Department of Consumer Affairs ("DCA"); DCA's rules promulgated under the PSLL are codified at Chapter 7 of Title 6 of the Rules of the City of New York ("Rules").

Contractor agrees to comply in all respects with the PSLL and the Rules, and as amended, if applicable, in the performance of this agreement. Contractor further acknowledges that such compliance is a material term of this agreement and that failure to comply with the PSLL in performance of this agreement may result in its termination.

Contractor must notify the Agency Chief Contracting Officer of the City agency or other entity with whom it is contracting in writing within ten (10) days of receipt of a complaint (whether oral or written) regarding the PSLL involving the performance of this agreement. Additionally, Contractor must cooperate with DCA's education efforts and must comply with DCA's subpoenas and other document demands as set forth in the PSLL and Rules.

The PSLL is summarized below for the convenience of Contractor. Contractor is advised to review the PSLL and Rules in their entirety. On the website www.nyc.gov/PaidSickLeave there are links to the PSLL and the associated Rules as well as additional resources for employers, such as Frequently Asked Questions, timekeeping tools and model forms, and an event calendar of upcoming presentations and webinars at which Contractor can get more information about how to comply with the PSLL. Contractor acknowledges that it is responsible for compliance with the PSLL notwithstanding any inconsistent language contained herein.

Pursuant to the PSLL and the Rules:

Applicability, Accrual, and Use

An employee who works within the City of New York for more than eighty hours in any consecutive 12-month period designated by the employer as its "calendar year" pursuant to the PSLL ("Year") must be provided sick time. Employers must provide a minimum of one hour of sick time for every 30 hours worked by an employee and compensation for such sick time must

[1] Pursuant to the PSLL, if fewer than five employees work for the same employer, as determined pursuant to New York City Administrative Code §20-912(g), such employer has the option of providing such employees uncompensated sick time.

be provided at the greater of the employee's regular hourly rate or the minimum wage. Employers are not required to provide more than forty hours of sick time to an employee in any Year.

An employee has the right to determine how much sick time he or she will use, provided that employers may set a reasonable minimum increment for the use of sick time not to exceed four hours per day. In addition, an employee may carry over up to forty hours of unused sick time to the following Year, provided that no employer is required to allow the use of more than forty hours of sick time in a Year or carry over unused paid sick time if the employee is paid for such unused sick time and the employer provides the employee with at least the legally required amount of paid sick time for such employee for the immediately subsequent Year on the first day of such Year.

An employee entitled to sick time pursuant to the PSLL may use sick time for any of the following:

- such employee's mental illness, physical illness, injury, or health condition or the care of such illness, injury, or condition or such employee's need for medical diagnosis or preventive medical care;
- such employee's care of a family member (an employee's child, spouse, domestic partner, parent, sibling, grandchild or grandparent, or the child or parent of an employee's spouse or domestic partner) who has a mental illness, physical illness, injury or health condition or who has a need for medical diagnosis or preventive medical care;
- closure of such employee's place of business by order of a public official due to a public health emergency; or
- such employee's need to care for a child whose school or childcare provider has been closed due to a public health emergency.

An employer must not require an employee, as a condition of taking sick time, to search for a replacement. However, an employer may require an employee to provide: reasonable notice of the need to use sick time; reasonable documentation that the use of sick time was needed for a reason above if for an absence of more than three consecutive work days; and/or written confirmation that an employee used sick time pursuant to the PSLL. However, an employer may not require documentation specifying the nature of a medical condition or otherwise require disclosure of the details of a medical condition as a condition of providing sick time and health information obtained solely due to an employee's use of sick time pursuant to the PSLL must be treated by the employer as confidential.

If an employer chooses to impose any permissible discretionary requirement as a condition of using sick time, it must provide to all employees a written policy containing those requirements, using a delivery method that reasonably ensures that employees receive the policy. If such employer has not provided its written policy, it may not deny sick time to an employee because of non-compliance with such a policy.

Sick time to which an employee is entitled must be paid no later than the payday for the next regular payroll period beginning after the sick time was used.

Exemptions and Exceptions

Notwithstanding the above, the PSLL does not apply to any of the following:

- an independent contractor who does not meet the definition of employee under section 190(2) of the New York State Labor Law;
- an employee covered by a valid collective bargaining agreement in effect on April 1, 2014 until the termination of such agreement;
- an employee in the construction or grocery industry covered by a valid collective bargaining agreement if the provisions of the PSLL are expressly waived in such collective bargaining agreement;
- an employee covered by another valid collective bargaining agreement if such provisions are expressly waived in such agreement and such agreement provides a benefit comparable to that provided by the PSLL for such employee;
- an audiologist, occupational therapist, physical therapist, or speech language pathologist who is licensed by the New York State Department of Education and who calls in for work assignments at will, determines his or her own schedule, has the ability to reject or accept any assignment referred to him or her, and is paid an average hourly wage that is at least four times the federal minimum wage;
- an employee in a work study program under Section 2753 of Chapter 42 of the United States Code;
- an employee whose work is compensated by a qualified scholarship program as that term is defined in the Internal Revenue Code, Section 117 of Chapter 20 of the United States Code; or
- a participant in a Work Experience Program (WEP) under section 336-c of the New York State Social Services Law.

Retaliation Prohibited

An employer may not threaten or engage in retaliation against an employee for exercising or attempting in good faith to exercise any right provided by the PSLL. In addition, an employer may not interfere with any investigation, proceeding, or hearing pursuant to the PSLL.

Notice of Rights

An employer must provide its employees with written notice of their rights pursuant to the PSLL. Such notice must be in English and the primary language spoken by an employee, provided that DCA has made available a translation into such language. Downloadable notices are available on DCA's website at http://www.nyc.gov/html/dca/html/law/PaidSickLeave.shtml.

Any person or entity that willfully violates these notice requirements is subject to a civil penalty in an amount not to exceed fifty dollars for each employee who was not given appropriate notice.

Records

An employer must retain records documenting its compliance with the PSLL for a period of at least three years, and must allow DCA to access such records in furtherance of an investigation related to an alleged violation of the PSLL.

Enforcement and Penalties

Upon receiving a complaint alleging a violation of the PSLL, DCA has the right to investigate such complaint and attempt to resolve it through mediation. Within 30 days of written notification of a complaint by DCA, or sooner in certain circumstances, the employer must provide DCA with a written response and such other information as DCA may request. If DCA believes that a violation of the PSLL has occurred, it has the right to issue a notice of violation to the employer.

DCA has the power to grant an employee or former employee all appropriate relief as set forth in New York City Administrative Code 20-924(d). Such relief may include, among other remedies, treble damages for the wages that should have been paid, damages for unlawful retaliation, and damages and reinstatement for unlawful discharge. In addition, DCA may impose on an employer found to have violated the PSLL civil penalties not to exceed $500 for a first violation, $750 for a second violation within two years of the first violation, and $1,000 for each succeeding violation within two years of the previous violation.

More Generous Polices and Other Legal Requirements

Nothing in the PSLL is intended to discourage, prohibit, diminish, or impair the adoption or retention of a more generous sick time policy, or the obligation of an employer to comply with any contract, collective bargaining agreement, employment benefit plan or other agreement providing more generous sick time. The PSLL provides minimum requirements pertaining to sick time and does not preempt, limit or otherwise affect the applicability of any other law, regulation, rule, requirement, policy or standard that provides for greater accrual or use by employees of sick leave or time, whether paid or unpaid, or that extends other protections to employees. The PSLL may not be construed as creating or imposing any requirement in conflict with any federal or state law, rule or regulation.

NEW YORK CITY STANDARD CONSTRUCTION CONTRACT (DEC. 2013)
INSURANCE RIDER

The following provisions supersede the corresponding provisions in the December 2013 version of the New York City Standard Construction Contract:

1. Section 22.1.1(c) provides as follows:

   22.1.1(c) If the **Work** requires a permit from the Department of Buildings pursuant to 1 RCNY Section 101-08, the **Contractor** shall provide Commercial General Liability Insurance with limits of at least those required by 1 RCNY section 101-08 or greater limits provided by the Agency in Schedule A. If the Work does not require such a permit, the minimum limits shall be those provided for in Schedule A.

2. Section 22.3.3 provides as follows:

   22.3.3 For policies provided pursuant to all of Article 22.1 other than Article 22.1.2, the **Contractor** shall submit one or more Certificates of Insurance on forms acceptable to the **Commissioner**. All such Certificates of Insurance shall certify (a) the issuance and effectiveness of such policies of insurance, each with the specified minimum limits (b) for insurance secured pursuant to Article 22.1.1 that the **City** and any other entity specified in Schedule A is an Additional Insured thereunder; (c) in the event insurance is required pursuant to Article 22.1.6 and/or Article 22.1.7, that the City is an Additional Insured thereunder; and (d) the company code issued to the insurance company by the National Association of Insurance Commissioners (the NAIC number). All such Certificates of Insurance shall be accompanied by the required additional insured endorsements and either a duly executed "Certification by Insurance Broker or Agent" in the form contained in Part III of Schedule A or copies of all policies referenced in such Certificate of Insurance as certified by an authorized representative of the issuing insurance carrier. If any policy is not available at the time of submission, certified binders may be submitted until such time as the policy is available, at which time a certified copy of the policy shall be submitted.

(NO TEXT ON THIS PAGE)

NOTICE TO BIDDERS

Please be advised that the City of New York has issued a new Standard Construction Contract. The new Contract, which is incorporated in this bid, is significantly different from the 2008 version previously used by the City. A listing of some of the significant changes is provided below. This notice is only a partial listing. Please refer to the Contract itself for a full understanding of the changes and the actual text of the changes that were made. The text of the revised Standard Construction Contract is the controlling document should there be any discrepancies between this notice and the Standard Construction Contract.

Significant changes include the following:

ARTICLE 11 DAMAGES CAUSED BY DELAYS

In 2008, the City embarked on a pilot project to test the use of new construction contract language altering the allocation of the risk of project delays, as between the City and the contractor. The City has determined to make the pilot project language the standard language for all City construction contracts. Accordingly, there is now one Standard City Construction Contract that is to be used by all agencies for all bids released after the release of the new contract. The damages for delay language is Article 11. Please note that changes have been made to the damages for delay provisions from the pilot to the adopted version.

ARTICLE 22 INSURANCE

Changes have been made to the insurance provisions, including incorporating requirements that the insurance provided comply with recent NYC Department of Buildings regulations specifying required dollar limits for CGL insurance for certain projects and requiring proof of builder's risk insurance prior to Work commencing rather than within 10 days of award.

ARTICLE 26 EXTRA WORK

The percentage paid for overhead for Extra Work pursuant to Section 26.1.11 is increased from 10% to 12% and the calculation of Worker's Compensation insurance costs reimbursed for Extra Work has been clarified.

ARTICLE 37 LABOR LAW REQUIREMENTS
ARTICLE 38 PAYROLL REPORTS

The provisions governing Labor Law provisions have been tightened, including requirements the employee identification cards include a photo (unless the requirement is waived), a prohibition on cash payments to employees and subcontractors, and clear enforcement authority requirements.

ARTICLE 70 ELECTRONIC FILING

A provision is added to make mandatory the electronic filing of certain alteration permits with the Department of Buildings.

Other significant changes include the following:

ARTICLE 7 INDEMNIFICATION

Changes have been made to the indemnification provisions.

ARTICLE14 FINAL ACCEPTANCE OF WORK
ARTICLE 44 SUBSTANTIAL COMPLETION PAYMENT

The Commissioner is no longer required to issue a substantial completion determination in addition to the already existing requirement that the Engineer issue a substantial completion determination and reach an agreement on a punch list of remaining work. Now, the Engineer, when issuing the punch list to the Contractor, must also include a proposed schedule for the completion of the punch list. The Contractor may propose an alternative schedule that is subject to the approval of the Engineer. If the Contractor fails to respond to the Engineer's proposed schedule, the Engineer's schedule is deemed accepted.

ARTICLE 15 LIQUIDATED DAMAGES

The contract is revised to match Schedule A to provide that liquidated damages are available only until substantial completion.

ARTICLE 17 SUBCONTRACTS

The requirements for prior approval of subcontractors, and for contractors to be responsible for the actions of their subcontractors, have been tightened. The requirement that the Contractor list subcontractors in the City's Payee Information Portal has been added; the provision was previously attached as a rider.

ARTICLE 19 SECURITY DEPOSIT

The provisions governing the return of bid deposits are clarified.

ARTICLE 20 PAYMENT GUARANTEE

The Payment Guaranty provisions, which apply when the City does not require the Contractor to obtain payment bonds, has been significantly revised to track the requirements of State Finance law 137.

ARTICLE 28 RECORDKEEPING FOR EXTRA OR DISPUTED WORK

The recordkeeping requirement that currently apply to payments for Time & Materials for extra work are expressly made applicable to regular work that is paid for on a T & M basis.

ARTICLE 35 EMPLOYEES

The whistleblower provisions of local law are added to the construction contract. They previously have been attached as a rider.

ARTICLE 38 PAYROLL REPORTS
ARTICLE 77 RECORDS RETENTION

Requirements that records be maintained for six years and directions on how such records must be made available.

ARTICLE 42 PARTIAL PAYMENTS

Increased flexibility has been provided for when contractors may submit invoices.

ARTICLE 62 TAX EXEMPTION

The provisions identifying the State tax exemption for municipalities are revised to more clearly describe State law.

(NO TEXT ON THIS PAGE)

CITY OF NEW YORK

DEPARTMENT OF
DESIGN AND CONSTRUCTION
DIVISION OF INFRASTRUCTURES

INFORMATION FOR BIDDERS

JUNE 2015

(NO TEXT ON THIS PAGE)

CITY OF NEW YORK CITY
DEPARTMENT OF DESIGN AND CONSTRUCTION
INFORMATION FOR BIDDERS

TABLE OF CONTENTS

SECTION 1.	DESCRIPTION AND LOCATION OF WORK	1
SECTION 2.	TIME AND PLACE FOR RECEIPT OF BIDS	1
SECTION 3.	DEFINITIONS	1
SECTION 4.	INVITATION FOR BIDS AND CONTRACT DOCUMENTS	1
SECTION 5.	PRE-BID CONFERENCE	2
SECTION 6.	AGENCY CONTACT	2
SECTION 7.	BIDDER'S OATH	2
SECTION 8.	EXAMINATION AND VIEWING OF SITE, CONSIDERATION OF OTHER SOURCES OF INFORMATION AND CHANGED CONDITIONS	2
SECTION 9.	EXAMINATION OF PROPOSED CONTRACT	3
SECTION 10.	FORM OF BID	3
SECTION 11.	IRREVOCABILITY OF BID	3
SECTION 12.	ACKNOWLEDGMENT OF AMENDMENTS	4
SECTION 13.	BID SAMPLES AND DESCRIPTIVE LITERATURE	4
SECTION 14.	PROPRIETARY INFORMATION/TRADE SECRETS	4
SECTION 15.	PRE-OPENING MODIFICATION OR WITHDRAWAL OF BIDS	4
SECTION 16.	BID EVALUATION AND AWARD	4
SECTION 17.	LATE BIDS, LATE WITHDRAWALS AND LATE MODIFICATIONS	5
SECTION 18.	WITHDRAWAL OF BIDS.	5
SECTION 19.	MISTAKE IN BIDS	5
SECTION 20.	LOW TIE BIDS	6
SECTION 21.	REJECTION OF BIDS	6
SECTION 22.	RIGHT TO APPEAL DETERMINATIONS OF NON-RESPONSIVENESS OR NON-RESPONSIBILITY AND RIGHT TO PROTEST SOLICITATIONS AND AWARD	7
SECTION 23.	AFFIRMATIVE ACTION AND EQUAL EMPLOYMENT OPPORTUNITY	7
SECTION 24.	VENDEX QUESTIONNAIRES	7
SECTION 25.	COMPLAINTS ABOUT THE BID PROCESS	8
SECTION 26.	BID, PERFORMANCE AND PAYMENT SECURITY	8
SECTION 27.	FAILURE TO EXECUTE CONTRACT	9
SECTION 28.	BIDDER RESPONSIBILITIES AND QUALIFICATIONS	9
SECTION 29.	EMPLOYMENT REPORT	10
SECTION 30.	LABOR LAW REQUIREMENTS	10
SECTION 31.	INSURANCE	10
SECTION 32.	LUMP SUM CONTRACTS	11
SECTION 33.	UNIT PRICE CONTRACTS	11
SECTION 34.	EXCISE TAX	11
SECTION 35.	LICENSES AND PERMITS	11
SECTION 36.	MULTIPLE PRIME CONTRACTORS	11
SECTION 37.	LOCALLY BASED ENTERPRISE REQUIREMENTS (LBE)	12
SECTION 38.	BID SUBMISSION REQUIREMENTS	13
SECTION 39.	COMPTROLLER'SCERTIFICATE	14
SECTION 40.	PROCUREMENT POLICY BOARD RULES	14
SECTION 41.	DDC SAFETY REQUIREMENTS	14

(NO TEXT ON THIS PAGE)

INFORMATION FOR BIDDERS

1. Description and Location of Work

The description and location of the work for which bids are requested are specified in Attachment 1, "Bid Information". Attachment 1 is included as page A-l of the Bid Booklet.

2. Time and Place for Receipt of Bids

Sealed bids shall be received on or before the date and hour specified in Attachment 1, at which time they will be publicly opened and read aloud in the presence of the Commissioner or his or her representative, and any bidders who may desire to be present.

3. Definitions

The definitions set forth in the Procurement Policy Board Rules shall apply to this Invitation For Bids.

4. Invitation For Bids and Contract Documents

(A) Except for titles, sub-titles, headings, running headlines, tables of contents and indices (all of which are printed herein merely for convenience) the following, except for such portions thereof as may be specifically excluded, shall be deemed to be part of the Contract and the Invitation for Bids.

(1) All provisions required by law to be inserted in this Contract, whether actually inserted or not
(2) The Contract Drawings and Specifications
(3) The General Conditions, the General Requirements and the Special Conditions, if any
(4) The Contract
(5) The Information for Bidders; Request for Proposals; Notice of Solicitation and Proposal For Bids; Bid or Proposal, and, if used, the Bid Booklet
(6) The Budget Director's Certificate; all Addenda issued prior to the receipt of the bids; the Notice of Award; Performance and Payment Bonds, if required; and the Notice to Proceed with the Work.

(B) For particulars as to this procurement, including quantity and quality of the purchase, extent of the work or labor to be performed, delivery and performance schedule, and any other special instructions, prospective bidders are referred to the Invitation For Bids Documents. A copy of such documents can be obtained at the location set forth in Attachment 1.

(C) Deposit for Copy of Invitation For Bids Documents: Prospective bidders may obtain a copy of the Invitation For Bids Documents by complying with the conditions set forth in the Notice of Solicitation. The deposit must be in the form of a check or money order made payable to the City of New York, and drawn upon a state or national bank or trust company, or a check of such bank or trust company signed by a duly authorized officer thereof.

(D) Return of Invitation For Bids Documents: All Invitation For Bids Documents must be returned to the Department upon request. If the bidder elects not to submit a bid thereunder, the

Invitation For Bids Documents shall be returned to the Department, along with a statement that no bid will be submitted.

(E) Return of Deposit: Such deposit will be returned within 30 days after the award of the contract or the rejection of all bids as set forth in the advertisement, provided the Invitation For Bids Documents are returned to the location specified in Attachment 1, in physical condition satisfactory to the Commissioner.

(F) Additional Copies: Additional copies of the Invitation For Bids Documents may be obtained, subject to the conditions set forth in the advertisement for bids.

5. Pre-Bid Conference

A pre-bid conference shall be held as set forth in Attachment 1. Nothing stated at the pre-bid conference shall change the terms or conditions of the Invitation For Bids Documents, unless a change is made by written amendment as provided in Section 9 below. Failure to attend a mandatory pre-bid conference shall constitute grounds for the rejection of the bid.

6. Agency Contact

Any questions or correspondence relating to this bid solicitation shall be addressed to the Agency Contact person specified in Attachment 1.

7. Bidder's Oath

(A) The bid-shall be properly signed by an authorized representative of the bidder and the bid shall be verified by the written oath of the authorized representative who signed the bid, that the several matters stated and information furnished therein are in all aspects true.

(B) A materially false statement willfully or fraudulently made in connection with the bid or any of the forms completed and submitted with the bid may result in the termination of any Contract between the City and the Bidder. As a result, the Bidder may be barred from participating in future City contracts as well as be subject to possible criminal prosecution.

8. Examination and Viewing of Site

(A) Pre-Bidding (Investigation) Viewing of Site -Bidders must carefully view and examine the site of the proposed work, as well as its adjacent area, and seek other usual sources of information, for they will be conclusively presumed to have full knowledge of any and all conditions on, about or above the site relating to or affecting in any way the performance of the work to be done under the Contract which were or should have been indicated to a reasonably prudent bidder. To arrange a date for visiting the work site, bidders are to contact the Agency Contact person specified in Attachment 1.

(B) Should the contractor encounter during the progress of the work subsurface conditions at the site materially differing from any shown on the Contract Drawings or indicated in the Specifications or such subsurface conditions as could not reasonably have been anticipated by the contractor and were not anticipated by the City, which conditions will materially affect the cost of the work to be done under the

Contract, the attention of the Commissioner must be called immediately to such conditions before they are disturbed. The Commissioner shall thereupon promptly investigate the conditions. If he finds that they do so materially differ, or that they could not have been reasonably anticipated by the contractor and were not anticipated by the City, the Contract may be modified with his written approval.

9. Examination of Proposed Contract

(A) Request for Interpretation or Correction: Prospective bidders must examine the Contract Documents carefully and before bidding must request the Commissioner in writing for an interpretation or correction of every patent ambiguity, inconsistency or error therein which should have been discovered by a reasonably prudent bidder. Such interpretation or correction, as well as any additional contract provisions the Commissioner may decide to include, will be issued in writing by the Commissioner as an addendum to the Contract, which will be transmitted to each person recorded as having received a copy of the Contract Documents from the Department. Transmission of such addendum will be by mail, e-mail, facsimile or hand delivery. Such addendum will also be posted at the place where the Contract Documents are available for the inspection of prospective bidders. Upon transmission as provided for herein, such addendum shall become a part of the Contract Documents, and binding on all bidders, whether or not actual notice of such addendum is shown.

(B) Only Commissioner's Interpretation or Correction Binding: Only the written interpretation or correction so given by the Commissioner shall be binding, and prospective bidders are warned that no other officer, agent or employee of the City is authorized to give information concerning, or to explain or interpret, the Contract.

(C) Documents given to a subcontractor for the purpose of soliciting the subcontractor's bid shall include either a copy of the bid cover sheet or a separate information sheet setting forth the project name, the Contract number (if available), the contracting agency and the Project's location.

10. Form of Bid

Each bid must be submitted upon the prescribed form and must contain: a) the name, residence and place of business of the person or persons making the same; b) the names of all persons interested therein, and if no other person is so interested, such fact must be distinctly stated; c) a statement to the effect that it is made without any connection with any other person making a bid for the same purpose and that it is in all respects fair and without collusion or fraud; d) a statement that no Council member or other officer or employee or person whose salary is payable in whole or part from the City Treasury is directly or indirectly interested therein or in the supplies, materials or equipment and work or labor to which it relates, or in any portion of the profits thereof; e) a statement that the bidder is not in arrears to the City or to any agency upon a debt or contract or taxes, and is not a defaulter as surety or otherwise upon any obligation to the City to any agency thereof, except as set forth in the bid.

THE BID SHALL BE TYPEWRITTEN OR WRITTEN LEGIBLY IN INK. THE BID SHALL BE SIGNED IN INK. ERASURES OR ALTERATIONS SHALL BE INITIALED BY THE SIGNER IN INK. FAILURE TO CONFORM TO THE REQUIREMENTS OF THIS SECTION 10 SHALL RESULT IN THE REJECTION OF THE BID.

11. Irrevocability of Bid

The prices set forth in the bid cannot be revoked and shall be effective until the award of the Contract, unless the bid is withdrawn as provided for in Sections 15 and 18 below.

12. Acknowledgment of Amendments

The receipt of any amendment to the Contract Documents shall be acknowledged by the bidder in its bid submission.

13. Bid Samples and Descriptive Literature

Bid samples and descriptive literature shall not be submitted by the bidder, unless expressly requested elsewhere in the Contract or Contract Documents. Any unsolicited bid samples or descriptive literature which are submitted shall not be examined or tested and shall not be deemed to vary any of the provisions of this Contract.

14. Proprietary Information/Trade Secrets

(A) The bidder shall identify those portions of the bid which it deems to be confidential, proprietary information or trade secrets, and provide justification why such materials shall not be disclosed by the City. All such materials shall be clearly indicated by stamping the pages on which such information appears, at the top and bottom thereof with the word "Confidential". Such materials stamped "Confidential" must be easily separable from the non-confidential sections of the bid.

(B) All such materials so indicated shall be reviewed by the Agency and any decision not to honor a request for confidentiality shall be communicated in writing to the bidder. For those bids which are unsuccessful, all such confidential materials shall be returned to the bidder. Prices, makes and model or catalog numbers of the items offered, deliveries, and terms of payment shall be publicly available after bid opening, regardless of any designation of confidentiality made by the bidder.

15. Pre-Opening Modification or Withdrawal of Bids

Bids may be modified or withdrawn by written notice received in the office designated in Attachment 1, before the time and date set for the bid opening. If a bid is withdrawn in accordance with this Section, the bid security, if any, shall be returned to the bidder.

16. Bid Evaluation and Award

In accordance with the New York City Charter, the Procurement Policy Board Rules and the terms and conditions of this Invitation For Bids, this Contract shall be awarded, if at all, to the responsible bidder whose bid meets the requirements and evaluation criteria set forth in the Invitation For Bids, and whose bid price is either the most favorable bid price or, if the Invitation For Bids so states, the most favorable evaluated bid price. A bid may not be evaluated for any requirement or criterion that is not disclosed in the Invitation For Bids.

Restriction: No negotiations with any bidder shall be allowed to take place except under the circumstances and in the manner set forth in Section 21. Nothing in this Section shall be deemed to permit a contract award to a bidder submitting a higher quality item than that designated in the Invitation For Bids, if that bid is not also the most favorable bid.

17. Late Bids, Late Withdrawals and Late Modifications

Any bid received at the place designated in the solicitation after the time and date set for receipt of bids is late and shall not be considered. Any request for withdrawal or modification received at the place designated in the solicitation after the time and date set for receipt of bids is late and shall not be considered. The exception to this provision is that a late modification of a successful bid that makes the bid terms more favorable to the City shall be considered at any time it is received.

18. Withdrawal of Bids.

Except as provided for in Section 15, above, a bidder may not withdraw its bid before the expiration of forty-five (45) days after the date of the opening of bids; thereafter, a bidder may withdraw its bid only in writing and in advance of an actual award. If within sixty (60) days after the execution of the Contract, the Commissioner fails to fix the date for commencement of work by written notice to the bidder, the bidder, at his option, may ask to be relieved of his obligation to perform the work called for by written notice to the Commissioner. If such notice is given to the Commissioner, and the request to withdraw is granted, the bidder waives all claims in connection with this Contract.

19. Mistake in Bids

(A) Mistake Discovered Before Bid Opening: A bidder may correct mistakes discovered before the time and date set for bid opening by withdrawing or correcting the bid as provided in Section 15 above.

(B) Mistakes Discovered Before Award

(1) In accordance with General Municipal Law (Section 103, subdivision 11), where a unilateral error or mistake is discovered in a bid, such bid may be withdrawn upon written approval of the Agency Chief Contracting Officer if the following conditions are met:

(a) The mistake is known or made known to the agency prior to the awarding of the Contract or within 3 days after the opening of the bid, whichever period is shorter; and
(b) The price bid was based upon an error of such magnitude that enforcement would be unconscionable; and
(c) The bid was submitted in good faith and the bidder submits credible evidence that the mistake was a clerical error as opposed to a judgment error; and
(d) The error in the bid is actually due to an unintentional and substantial arithmetic error or an unintentional omission of a substantial quantity of work, labor, material or services made directly in the compilation of the bid, which unintentional arithmetic error or unintentional omission can be clearly shown by objective evidence drawn from inspection of the original work paper, documents, or materials used in the preparation of the bid sought to be withdrawn; and
(e) It is possible to place the agency in the same position as existed prior to the bid.

(2) Unless otherwise required by law, the sole remedy for a bid mistake in accordance with this Article shall be withdrawal of the bid, and the return of the bid bond, or other security, if any, to the bidder. Thereafter, the agency may, in its discretion, award the Contract to the next lowest bidder or rebid the Contract. Any amendment to or reformation of a bid or a Contract to rectify such an error or mistake

therein is strictly prohibited.

(3) If the mistake and the intended correct bid are clearly evident on the face of the bid document, the bid shall be corrected to the intended correct bid and may not be withdrawn. Examples of mistakes that may be corrected are typographical errors, errors in extending unit prices, transposition errors and arithmetical errors.

20. Low Tie Bids

(A) When two or more low responsive bids from responsible bidders are identical in price, meeting all the requirements and criteria set forth in the Invitation For Bids, the Agency Chief Contracting Officer will break the tie in the following manner and order of priority:

(1) Award to a certified New York City small, minority or woman-owned business entity bidder;
(2) Award to a New York City bidder;
(3) Award to a certified New York State small, minority or woman-owned business bidder;
(4) Award to a New York State bidder.

(B) If two or more bidders still remain equally eligible after application of paragraph (A) above, award shall be made by a drawing by lot limited to those bidders. The bidders involved shall be invited to attend the drawing. A witness shall be present to verify the drawing and shall certify the results on the bid tabulation sheet.

21. Rejection of Bids

(A) Rejection of Individual Bids: The Agency may reject a bid if:

(1) The bidder fails to furnish any of the information required pursuant to Section 24 or 28 hereof; or if
(2) The bidder is determined to be not responsible pursuant to the Procurement Policy Board Rules; or if
(3) The bid is determined to be non-responsive pursuant to the Procurement Policy Board Rules; or if
(4) The bid, in the opinion of the Agency Chief Contracting Officer, contains unbalanced bid prices and is thus non-responsive, unless the bidder can show that the prices are not unbalanced for the probable required quantity of items, or if the imbalance is corrected pursuant to Section 15.

(B) Rejection of All Bids: The Agency, upon written approval by the Agency Chief Contracting Officer, may reject all bids and may elect to resolicit bids if in its sole opinion it shall deem it in the best interest of the City so to do.

(C) Rejection of All Bids and Negotiation With All Responsible Bidders: The Agency Head may determine that it is appropriate to cancel the Invitation For Bids after bid opening and before award and to complete the acquisition by negotiation. This determination shall be based on one of the following reasons:

(1) All otherwise acceptable bids received are at unreasonable prices, or only one bid is received and the Agency Chief Contracting Officer cannot determine the reasonableness of the bid price, or no responsive bid has been received from a responsible bidder; or

(2) In the judgment of the Agency Chief Contracting Officer, the bids were not independently arrived at in open competition, were collusive, or were submitted in bad faith.

(D) When the Agency has determined that the Invitation for Bids is to be canceled and that use of negotiation is appropriate to complete the acquisition, the contracting officer may negotiate and award the Contract without issuing a new solicitation, subject to the following conditions:

(1) prior notice of the intention to negotiate and a reasonable opportunity to negotiate have been given by the contracting officer to each responsible bidder that submitted a bid in response to the Invitation for Bids;

(2) the negotiated price is the lowest negotiated price offered by a responsible bidder; and

(3) the negotiated price is lower than the lowest rejected bid price of a responsible bidder that submitted a bid in response to the Invitation for Bids.

22. Right to Appeal Determinations of Non-Responsiveness or Non-Responsibility and Right to Protest Solicitations and Award

The bidder has the right to appeal a determination of non-responsiveness or non-responsibility and has the right to protest a solicitation and award. For further information concerning these rights, the bidder is directed to the Procurement Policy Board Rules.

23. Affirmative Action and Equal Employment Opportunity

This Invitation For Bids is subject to applicable provisions of Federal, State and Local Laws and executive orders requiring affirmative action and equal employment opportunity.

24. VENDEX Questionnaires

(A) Requirement: Pursuant to Administrative Code Section 6-116.2 and the PPB Rules, bidders may be obligated to complete and submit VENDEX Questionnaires. Generally, if this bid is $100,000 or more, or if this bid when added to the sum total of all contracts, concessions and franchises the bidder has received from the City and any subcontracts received from City contractors over the past twelve months, equals or exceeds $100,000, Vendex Questionnaires must be completed. If required, Vendex Questionnaires must be completed and submitted before any award of contract may be made or before approval is given for a proposed subcontractor. Non-compliance with these submission requirements may result in the disqualification of the bid, disapproval of a subcontractor, subsequent withdrawal of approval for the use of an approved subcontractor, or the cancellation of the contract after its award.

(B) Submission: Vendex Questionnaires must be submitted directly to the Mayor's Office of Contract Services, ATTN: Vendex, 253 Broadway, 9th Floor, New York, New York 10007. In addition, the bidder must submit a Confirmation of Vendex Compliance to the agency. A form for this confirmation is set forth in the Bid Booklet.

(C) Obtaining Forms: Vendex Questionnaires, as well as detailed instructions, may be obtained at www.nyc.gov/vendex. The bidder may also obtain Vendex forms and instructions by contacting the

Agency Chief Contracting Office or the contract person for this contract.

25. Complaints About the Bid Process

The New York City Comptroller is charged with the audit of contracts in New York City. Any vendor who believes that there has been unfairness, favoritism or impropriety in the bid process should inform the Comptroller, Office of Contract Administration, One Centre Street, Room 835, New York, New York; telephone number (212)669-2797.

26. Bid, Performance and Payment Security

(A) Bid Security: Each bid must be accompanied by bid security in an amount and type specified in Attachment 1 (page A-1 of the Bid Booklet). The bid security shall assure the City of New York of the adherence of the bidder to its proposal, the execution of the Contract, and the furnishing of Performance and Payment Bonds by the bidder, if required in Attachment 1. Bid security shall be returned to the bidder as follows:

(1) Within ten (10) days after the bid opening, the Comptroller will be notified to return the deposits of all but the three (3) lowest bidders. Within five (5) days after the award, the Comptroller will be notified to return the deposits of the remaining two unsuccessful bidders.
(2) Within five (5) days after the execution of the Contract and acceptance of the Contractor's bonds, the Comptroller will be notified to return the bid security of the successful bidder or, if performance and payment bonds are not required, only after the sum retained under Article 21 of the Contract equals the amount of the bid security.
(3) Where all bids are rejected, the Comptroller will be notified to return the deposit of the three (3) lowest bidders at the time of rejection.

(B) Performance and Payment Security: Performance and Payment Security must be provided in an amount and type specified in Attachment 1 (page A-1 of the Bid Booklet). The performance and payment security shall be delivered by the contractor prior to or at the time of execution of the Contract. If a contractor fails to deliver the required performance and payment security, its bid security shall be enforced, and an award of Contract may be made to the next lowest responsible and responsive bidder, or the contract may be rebid.

(C) Acceptable Types of Security: Acceptable types of security for bids, performance, and payment shall be limited to the following:

(1) a one-time bond in a form satisfactory to the City;
(2) a bank certified check or money order;
(3) obligations of the City of New York; or
(4) other financial instruments as determined by the Office of Construction in consultation with the Comptroller.

Whenever the successful bidder deposits obligations of the City of New York as performance and payment security, the Comptroller may sell and use the proceeds thereof for any purpose for which the principal or surety on such bond would be liable under the terms of the Contract. If the money is deposited with the Comptroller, the successful bidder shall not be entitled to receive interest on such money from the City.

(D) Form of Bonds: Security provided in the form of bonds must be prepared on the form of bonds authorized by the City of New York. Forms for bid, performance, and payment bonds are included in the Invitation for Bids Documents. Such bonds must have as surety thereunder such surety company or companies as are: (I) approved by the City of New York; (2) authorized to do business in the State of New York, and (3) approved by the Department of the Treasury of the United States. Premiums for any required bonds must be included in the base bid.

The bidder is advised that submission of a bid bond where the surety on such bond fails to meet the criteria set forth herein, shall result in the rejection of the bid as non-responsive.

The Department of the Treasury of the United States advises that information concerning approved surety companies may be obtained as follows: (1) from the Government Printing Office at 202-512-1800; (2) through the Internet at http://www.fms.treas.gov/c570/index.html, and (3) through a computerized public bulletin board, which can be accessed by using your computer modem and dialing 202-874-6887.

(E) Power of Attorney: Attorneys in fact who sign bid, performance, or payment bonds must file with each bond a certified copy of their power of attorney to sign said bonds.

27. Failure to Execute Contract

In the event of failure of the successful bidder to execute the Contract and furnish the required security within ten (10) days after notice of the award of the Contract, the deposit of the successful bidder or so much thereof as shall be applicable to the amount of the award made shall be retained by the City, and the successful bidder shall be liable for and hereby agrees to pay on demand the difference between the price bid and the price for which such Contract shall be subsequently awarded, including the cost of any required reletting and less the amount of such deposit. No plea of mistake in such accepted bid shall be available to the bidder for the recovery of the deposit or as a defense to any action based upon such accepted bid. Further, should the bidder's failure to comply with this Section cause any funding agency, body or group (Federal, State, City, Public, Private, etc.) to terminate, cancel or reduce the funding on this project, the bidder in such event shall be liable also to the City for the amount of actual funding withdrawn by such agency on this project, less the amount of the forfeited deposit.

28. Bidder Responsibilities and Qualifications

(A) Bidders must include with their bids all information necessary for a determination of bidder responsibility, as set forth in the Specifications.

(B) The Agency may require any bidder or prospective bidder to furnish all books of account, records, vouchers, statements or other information concerning the bidder's financial status for examination as may be required by the Agency to ascertain the bidder's responsibility and capability to perform the Contract. If required, a bidder must also submit a sworn statement setting forth such information as the Agency may require concerning present and proposed plant and equipment, the personnel and qualifications of his working organizations, prior experience and performance record.

(C) Oral Examination on Qualifications: In addition thereto, and when directed by the Agency, the bidder, or a responsible officer, agent or employee of the bidder, must submit to an oral examination to be conducted by the Agency in relation to his proposed tentative plan and schedule of

operations, and such other matters as the Agency may deem necessary in order to determine the bidder's ability and responsibility to perform the work in accordance with the Contract. Each person so examined must sign and verify a stenographic transcript of such examination noting thereon such corrections as such person may desire to make.

(D) If the bidder fails or refuses to supply any of the documents or information set forth in paragraph (B) hereof or fails to comply with any of the requirements thereof, the Agency may reject the bid.

29. Employment Report

In accordance with Executive Order No. 50 (1980) as modified by Executive Order 108 (1986), the filing of a completed Employment Report (ER) is a requirement of doing business with the City of New York for construction contractors with contracts of $1,000,000 or more and subcontractors with construction subcontracts of $750,000 or more. The required forms and information are included in the Bid Booklet.

30. Labor Law Requirements

(A) General: The successful bidder will be required to comply strictly with all Federal, State and local labor laws and regulations.

(B) New York State Labor Law: This Contract is subject to New York State Labor Law Section 220, which requires that construction workers on the site be paid prevailing wages and supplements. The Contractor is reminded that all wage provisions of this Contract will be enforced strictly and failure to comply will be considered when evaluating performance. Noncompliance may result in the contractor being debarred by the City from future contracts. Complaints filed with the Comptroller may result in decisions which may debar a contractor from bidding contracts with any state governmental entity and other political subdivisions.

(C) Records: The Contractor is expected to submit accurate payroll reports and other required documents and verify attendance and job classifications being utilized in compliance with the law, Contract provisions and agency procedures.

31. Insurance

(A) Bidders are advised that the insurance requirements contained herein are regarded as material terms of the Contract. As required by Article 22 of the Contract, the contractor must effect and maintain with companies licensed and authorized to do business in the State of New York, the types of insurance set forth therein, when required by and in the amounts set forth in Schedule A of the General Conditions. Such required insurance must be provided from the date the contractor is ordered to commence work and up to the date of final acceptance of all required work.

(B) The contractor must, within ten days of receipt of the notice of award, submit the following insurance documentation: (a) original certificate of insurance for general liability in the amount required by Schedule A of the General Conditions, and (b) original certificates of insurance or other proof of coverage for workers' compensation and disability benefits, as required by Section 57 of the New York State Workers' Compensation Law and Section 220 of the Disability Benefits Law.

32. Lump Sum Contracts

(A) Comparison of Bids: Bids on Lump Sum Contracts will be compared on the basis of the lump sum price bid, adjusted for alternate prices bid, if any.

(B) Lump Sum Bids for "General Construction Work" which include excavation shall include all necessary excavation work defined in the Specifications as being included in the lump sum bid. The bidder shall also bid a unit price for the additional cost of excavating material which is defined in the Specifications as excavation for which additional payment will be made. The total estimated additional cost of removing such material will be taken as the quantity set forth in the Engineer's Estimate multiplied by the unit price bid. This total estimated cost of additional excavation shall be added to the lump sum bid for the General Construction Work for the purpose of comparing bids to determine the low bidder.

(C) Variations from Engineer's Estimate: The Engineer's Estimate of the quantity of excavation for which additional payment will be made is approximate only and is given solely to be used as a uniform basis for the comparison of bids and such estimate is not to be considered as part of this contract. The quantities actually required to complete the contract work may be more or less than the quantities in the Engineer's Estimate and, if so, no action for damages or for loss of profits shall accrue to the contractor by reason thereof.

33. Unit Price Contracts

(A) Comparison of Bids: Bids on Unit Price Contracts will be compared on the basis of a total estimated price, arrived at by taking the sum of the estimated quantities of such items, in accordance with the Engineer's Estimate of Quantities set forth in the Bid Schedule, multiplied by the corresponding unit prices, and including any lump sum bids on individual items.

(B) Variations from Engineer's Estimate: Bidders are warned that the Engineer's Estimate of Quantities on the various items of work and materials is approximate only, given solely to be used as a uniform basis for the comparison of bids, and is not be considered part of this contract. The quantities actually required to complete the contract work may be less or more than so estimated, and if so, no action for damages or for loss of profits shall accrue to the contractor by reason thereof.

(C) Overruns: The terms and conditions applicable to overruns of unit price items are set forth in Article 26 of the Contract.

34. Excise Tax

Bidders are referred to the Specifications for information on Federal Excise Tax exemptions.

35. Licenses and Permits

The successful bidder will be required to obtain all necessary licenses and permits necessary to perform the work.

36. Multiple Prime Contractors

If more than one prime contractor will be involved on this project, all contractors are required to examine the Invitation for Bid packages for all other parts of the project.

37. Locally Based Enterprise Requirements (LBE)

This Contract is subject to the requirements of Administrative Code, Section 6-108.1, and the regulations promulgated thereunder. No construction contract will be awarded unless and until these requirements have been complied with in their entirety. The bidder is advised of the provisions set forth below, as well as the provisions with respect to the Locally Based Enterprise Program contained in Article 67 of the Contract. The contractor is advised that:

(A) If any portion of the Contract is subcontracted, not less than ten percent of the total dollar amount of the contract shall be awarded to locally based enterprises ("LBEs"); except, where less than ten percent of the total dollar amount of the Contract is subcontracted, such lesser percentage shall be so awarded.

(B) No contractor shall require performance and payment bonds from LBE subcontractors.

(C) No Contract shall be awarded unless the contractor first identifies in its bid:

(1) the percentage, dollar amount and type of work to be subcontracted; and
(2) the percentage, dollar amount and type of work to be subcontracted to LBEs.

(D) Within ten calendar days after notification of low bid, the apparent low bidder shall submit an "LBE Participation Schedule" to the contracting agency. If such schedule does not identify sufficient LBE subcontractors to meet the requirements of Administrative Code Section 6-108.1, the apparent low bidder shall submit documentation of its good faith efforts to meet such requirements.

(1) The "LBE Participation Schedule" shall include:

(a) the name and address of each LBE that will be given a subcontract,
(b) the percentage, dollar amount and type of work to be subcontracted to the LBE, and
(c) the dates when the LBE subcontract work will commence and end.

(2) The following documents shall be attached to the "LBE Participation Schedule":

(a) verification letters from each subcontractor listed in the "LBE Participation Schedule" stating that the LBE will enter into a formal agreement for work,
(b) certification documents of any proposed LBE subcontractor which is not on the LBE certified list, and
(c) copies of the certification letter of any proposed subcontractor which is an LBE.

(3) Documentation of good faith efforts to achieve the required LBE percentage shall include as appropriate but not limited to the following:

(a) attendance at prebid meetings, when scheduled by the agency, to advise bidders of contract requirements;

(b) advertisement where appropriate in general circulation media, trade association publications and small business media of the specific subcontracts that would be at least equal to the percentage goal for LBE utilization specified by the contractor;

(c) written notification to association of small, minority and women contractors soliciting specific subcontractors;

(d) written notification by certified mail to LBE firms that their interest in the contract is solicited for specific work items and their estimated values;

(e) demonstration of efforts made to select portions of the work for performance by LBE firms in order to increase the likelihood of achieving the stated goal;

(f) documented efforts to negotiate with LBE firms for specific subcontracts, including at a minimum:
(i) The names, address and telephone numbers of LBE firms that are contacted;
(ii) A description of the information provided to LBE firms regarding the plans and specifications for portions of the work to be performed;
(iii) Documentation showing that no reasonable price can be obtained from LBE firms;
(iv) A statement of why agreements with LBE firms were not reached;

(g) a statement of the reason for rejecting any LBE firm which the contractor deemed to be unqualified; and

(h) documentation of efforts made to assist the LBE firms contacted that needed assistance in obtaining required insurance.

(E) Unless otherwise waived by the Commissioner with the approval of the Office of Economic and Financial Opportunity, failure of a proposed contractor to provide the information required by paragraphs (C) and (D) above may render the bid non-responsive and the Contract may not be awarded to the bidder. If the contractor states that it will subcontract a specific portion of the work, but can demonstrate despite good faith efforts it cannot achieve its required LBE percentage for subcontracted work until after award of Contract, the Contract may be awarded, subject to a letter of compliance from the contractor stating that it will comply with Administrative Code Section 6-108.1 and subject to approval by the Commissioner. If the contractor has not met its required LBE percentage prior to award, the contractor shall demonstrate that a good faith effort has been made subsequent to award to obtain LBEs on each subcontract until its meets the required percentage.

(F) When a bidder indicates prior to award that no work will be subcontracted, no work may be subcontracted without the prior written approval of the Commissioner, which shall be granted only if the contractor in good faith seeks LBE subcontractors at least six weeks prior to the start of work.

(G) The contractor may not substitute or change any LBE which was identified prior to award of the contract without the written permission of the Commissioner. The contractor shall make a written application to the Commissioner for permission to make such substitution or change, explaining why the contractor needs to change its LBE subcontractor and how the contractor will meet its LBE subcontracting requirement. Copies of such application must be served on the originally identified LBE by certified mail return receipt requested, as well as the proposed substitute LBE. The Commissioner shall determine whether or not to grant the contractor's request for substitution.

38. Bid Submission Requirements

The following forms, all of which are contained in the Bid Booklet, are to be completed and submitted with the bid:

(1) Bid Schedule and Bid Form, including Affirmation
(2) Bid Security (if required, see Attachment 1 on Page A-1)
(3) M/WBE Subcontactor Utilization Plan (if participation goals have been established)

FAILURE TO SUBMIT ITEMS (1), (2) AND (3)
WILL RESULT IN THE DISQUALIFICATION OF THE BID.

(4) Safety Questionnaire
(5) Construction Employment Report (if bid is $1,000,000 or more)
(6) Contract Certificate (if bid is less than $1,000,000)
(7) Confirmation of Vendex Compliance
(8) Special Experience Requirements (if applicable to this contract)
(9) Apprenticeship Program Questionnaire (if applicable)

FAILURE TO SUBMIT ITEMS (4) THROUGH (9)
MAY RESULT IN THE DISQUALIFICATION OF THE BID.

39. Comptroller's Certificate

This Contract shall not be binding or of any force unless it is registered by the Comptroller in accordance with Section 328 of the City Charter and the Procurement Policy Board Rules. This Contract shall continue in force only after annual appropriation of funds by the City of New York and certification as hereinabove set forth.

40. Procurement Policy Board Rules

This Invitation For Bids is subject to the Rules of the Procurement Policy Board of the City of New York. In the event of a conflict between said Rules and a provision of this Invitation For Bids, the Rules shall take precedence.

41. DDC Safety Requirements

The DDC Safety Requirements apply to the work to be performed pursuant to the Contract. The DDC Safety Requirements are set forth on the following pages.

CITY OF NEW YORK

DEPARTMENT OF DESIGN AND CONSTRUCTION

SAFETY REQUIREMENTS

June 2015

THE DDC SAFETY REQUIREMENTS INCLUDE THE FOLLOWING SECTIONS:

I. **POLICY ON SITE SAFETY**

II. **PURPOSE**

III. **DEFINITIONS**

IV. **RESPONSIBILITIES**

V. **SAFETY QUESTIONNAIRE**

VI. **SAFETY PROGRAM AND SITE SAFETY PLAN**

VII. **KICK-OFF/PRE-CONSTRUCTION MEETINGS AND SAFETY REVIEW**

VIII. **EVALUATION DURING WORK IN PROGRESS**

IX. **SAFETY PERFORMANCE EVALUATION**

I. POLICY ON SITE SAFETY

The City of New York Department of Design and Construction (DDC) is committed to a policy of injury and illness prevention and risk management for construction work that will ensure the safety and health of the workers engaged in the projects and the protection of the general public. Therefore, it is DDC's policy that work carried out by Contractors on DDC jobsites must, at a minimum, comply with applicable federal, state and city laws, rules and regulations, including without limitation:

- U. S. Department of Labor 29 Code of Federal Regulations (CFR) Part 1926 and applicable Sub-parts of Part 1910 – U.S. Occupational Safety and Health Administration (OSHA); New York State Department of Labor Industrial Code Rule 23 – Protection in Construction, Demolition and Excavation;
- New York City Construction Codes, Title 28
- NYC Department of Transportation Title 34 Chapter 2 – Highway Rules
- New York State Department of Labor Industrial Code Rule 16 NYCRR Part 753
- Title 15 of the Rules of the City of New York, Chapter 13 Citywide Construction Dust Mitigation
- Manual on Uniform Traffic Control Devices (MUTCD)
- Title 15 of the Rules of the City of New York, Chapter 28 Citywide Construction Noise Mitigation

II. PURPOSE

The purpose of this policy is to ensure that Contractors perform their work and supervise their employees in accordance with all applicable federal, state and city rules and regulations. Further, Contractors will be expected to minimize or eliminate jobsite and public hazards, through a planning, inspection, auditing and corrective action process. The goal is to control risks so that injuries, illnesses and accidents to contractors' employees, DDC employees and the general public, as well as damage to city-owned and private property, are reduced to the lowest level feasible.

III. DEFINITIONS

Agency Chief Contracting Officer (ACCO): The ACCO shall mean the person delegated authority by the Commissioner to organize and supervise the procurement activity of subordinate Agency staff in conjunction with the CCPO.

Competent Person: As defined by OSHA, an individual who is capable of identifying existing and predictable hazards in the surroundings or working conditions that are unsanitary, hazardous, or dangerous to employees or the general public, and who has authorization to take prompt corrective measures to eliminate them.

Construction Safety Auditor: A representative of the QA&CS Construction Safety Unit who provides inspection and assessment services to enhance health and safety on all DDC construction projects. The activities of the Construction Safety Auditor include performing site surveys, reviewing health and safety plans, reviewing construction permits, and rendering technical advice and assistance to DDC Resident Engineers and Project Managers.

Construction Safety Unit: A part of QA&CS within the Division of Program Management/ Safety & Site Support that assesses contractor safety on DDC jobsites and advises responsible parties of needed corrective actions.

Construction Superintendent: A representative of the contractor responsible for overseeing performance of the required construction work. This individual must engage in sound construction practices, and is responsible to maintain a safe work site. In the case of a project involving the demolition, alteration or new construction of buildings, the Construction Superintendent must be licensed by the NYC Department of Buildings.

Contractor: For purposes of these Safety Requirements, the term "Contractor" shall mean any person or entity that enters into a contract for the performance of construction work on a DDC project. The term "Contractor" shall include any person or entity which enters into any of the following types of contracts: (1) a prime construction contract for a specific project, (2) a prime construction contract using the Job Order Contracting System ("JOCS Contract"), and (3) a subcontract with a CM/Builder ("First Tier Subcontract").

Daily Safety Job Briefing: Daily jobsite safety meetings, giving to all jobsite personnel by contractor, with the purpose of discussing project specific safety procedures for the scheduled construction work.

Director - Quality Assurance and Construction Safety (QA&CS): Responsible for the operations of the QACS Construction Safety Unit and the DDC Site Safety management programs.

Job Hazard Analysis (JHA): A process of identifying the major job steps and any potential site-specific hazards that may be present during construction and establishing the means and methods to eliminate or control those hazards.

Qualified Person: As defined by OSHA, an individual who, by possession of a recognized degree, certificate, license or professional standing, or who by extensive knowledge, training, and experience, has successfully demonstrated his or her ability to solve problems relating to the subject matter, the work, or the project. Qualified Persons are required under regulation to address issues pertaining, but without limit, to fall protection, scaffold design and trenching and shoring, among others.

Project Site: Those areas indicated in the Contract Documents where the Work is to be performed.

Project Safety Representative: The designated project safety representative shall have completed an authorized 30 hour OSHA Construction Safety Course and other safety training applicable to Contractor's/subcontractor's project work. Except in instances where a dedicated Project Safety Manager is required, a Project Safety Representative may also function as a superintendent, foreman or crew leader on the Project, but must have sufficient experience and authority to undertake corrective actions and must qualify to be a competent person. No work is to be performed on site when a Project Safety Representative is not present.

Project Safety Manager: A dedicated, full-time project safety manager may be a contractual requirement on large projects or projects deemed by DDC to be particularly high risk. This would be in addition or in lieu of a Contractor's Project Safety Representative. This individual shall not have any other assigned duties. This individual shall have received, at a minimum an authorized 30 hour OSHA Construction Safety Course. Other examples of acceptable training are OSHA Safety and Health Standards for the Construction Industry training program (OSHA 510), Certified Safety Professional (CSP), Certified Industrial Hygienist (CIH) or a degree/certificate in a safety and health from a college-level curriculum.
A Project Safety Manager shall possess the additional training, years of experience, and skills necessary to thoroughly understand the health and safety hazards and controls for large construction projects, including the full scope of the specific Work.

QA&CS – Quality Assurance and Construction Safety of the New York City Department of Design and Construction.

Resident Engineer (RE) / Construction Project Manager (CPM): Representative of the Commissioner duly designated by the Commissioner to be his/her representative at the site of the work. (The RE/CPM may be a third-party consultant, including a Construction Management firm, retained by DDC)

Safety Program: Established by the Contractor that covers all operations of that Contractor and establishes the Contractor's overall safety policy, regulatory compliance plan and minimum safety standards. The Safety Program must be submitted prior to the commencement of work at the site and is subject to review and acceptance by the Construction Safety Unit.

Safety Questionnaire: Used by DDC to evaluate Contractor's current and past safety performance. It is required to be completed by all Contractors initially when submitting bids for Construction work, or when being pre-qualified and updated annually or as requested by the DDC.

Site Safety Manager: For certain projects, as defined in NYC Construction Codes – Title 28, the Contractor shall provide a Site Safety Manager with a Site Safety Manager License issued by the NYC Department of Building.

Site Safety Plan: A site-specific safety plan developed by the Contractor for a specific project. The Site Safety Plan must identify hazards associated with the project, and include specific safety procedures and training appropriate and necessary to complete the work. The Site Safety Plan must be submitted prior to the commencement of work at the site and is subject to review and acceptance by the Construction Safety Unit.

Unsafe or Unhealthy Condition: A condition that could be potentially hazardous to the health and safety of personnel or the public, and/or damaging to equipment, machinery, property or the environment.

Weekly Safety Meetings: Weekly documented jobsite safety meetings, given to all jobsite personnel by contractor, with the purpose of discussing general safety topics and job specific requirements encountered at the DDC work site.

Work: The construction required by the Contract Documents whether completed or partially completed, performed by the Contractor/ subcontractors. Work refers to the furnishing of labor, furnishing and incorporating materials and equipment into the construction and providing any service required by the Contract Documents to fulfill the Contractor's obligation to complete the Project.

IV. RESPONSIBILITIES

All persons who manage, perform, and provide support for construction projects shall conduct operations in compliance with the requirements identified in this Policy and all applicable governing regulatory agency requirements and guidelines pertaining to safety in construction.

A. DDC or CM Resident Engineer / Construction Project Manager

- Monitors the issuance of safety- related permits, approvals and drawings and maintains copies on site.
- Monitors construction-related work activities to confirm that they are conducted in accordance with DDC policies and all applicable regulations that pertain to construction safety.
- Maintains documentation and periodically attends weekly safety meetings and daily safety job briefings.
- Notifies the Construction Safety Unit and the ACCO's Insurance and Risk Management Unit of project- related accidents and emergencies, as per DDC's Construction Safety Emergency and Accident Notification and Response Protocol.
- Gathers facts related to all accidents and prepares DDC Construction Accident Report.

- Notifies the Construction Safety Unit within two (2) hours of the start of an inspection by any outside regulatory agency personnel, including OSHA, NYC DOB or others and forwards a copy of the inspection report within three days of its receipt.
- Monitors the conditions at the site for conformance with the contractor's Site Safety Plan and DDC construction documents.
- Notifies the contractor and DDC in the event that any condition or activity exists that is not in compliance with the contractor's Site Safety Plan, applicable federal, state or local codes or any condition that presents a potential risk of injury to the public or workers or possible damage to property.
- Notifies DDC of any unsafe or unhealthy condition and directs the contractor to provide such labor, materials, equipment and supervision to abate such conditions.
- Escort and assist QA&CS Construction Safety Auditors during the field and record inspections.
- Reports emergency conditions to the Construction Safety Unit immediately.

B. Contractors

- Submit a completed Safety Questionnaire and other safety performance related documentation with its bid or as part of a pre-qualification package.
- Complete a written Job Hazard Analysis (JHA) that identifies safety hazards for project specific work tasks and hazard control methods. A written JHA shall be available at the site for reference and included in the Site Safety Plan submitted by the contractor.
- Submit a Site Safety Plan and Safety Program within 30 days from the Award Date or as otherwise directed. The Site Safety Plan and Safety Program are subject to review and acceptance by the Construction Safety Unit prior to the commencement of work at the site. The Site Safety Plan shall be revised and updated as necessary.
- Develop project specific safety procedures to protect general public during all construction activities for the duration of the project.
- Ensure that all employees are aware of the hazards associated with the project through documented formal and informal training and/or other communications. Conduct and document weekly safety meetings and daily job briefing sessions for the duration of the project. Documentation to be provided to the RE/CPM on a monthly basis.
- Name the Project Safety Representative and Project Safety Manager, if required. The Contractor will be required to identify the Project Safety Representative and Project Safety Manager in the Site Safety Plan. Resumes, outlining the qualification and experience for the Project Safety Representative and Project Safety Manager, shall be available upon request. DDC reserves the right to request that the Contractor replace any Project Safety Representative or Project Safety Manager for any reason at any time during the project.
- Name a Competent Person(s), The Contractor will be required to identify a Competent Person(s) in the Site Safety Plan.
- Comply with all mandated federal, state and local safety and health rules and regulations.
- Comply with all provisions of the Site Safety Plan.
- Conduct applicable safety training prior to the commencement of work at the site. All training records (OSHA 10-hour, flagger, scaffold, fall protection, confined space entry, etc.) shall be provided to the RE/CPM prior to mobilization, included in the Site Safety Plan, kept current during the course of the project, and available for review. Prior to performing any work on DDC project all employees shall have successfully completed, within the previous five calendar years, a 10 Hour OSHA construction safety course.
- As part of the Site Safety Plan, prepare a site specific programs and plans, such as MPT plan, steel erection plan, confined space program, fall protection plan, demolition plan, etc. (if not otherwise provided in the contract documents) and comply with all of its provisions.
- Conduct and document site-specific safety orientation for Contractor personnel to review the hazards associated with the project as identified in the Site Safety Plan and the specific safety procedures and

controls that will be used to protect workers, the general public and property. The Project Safety Representative and/or Project Safety Manager will conduct this training prior to mobilization and provide documentation to the RE/CPM.

- Provide, replace and adequately maintain at or around the project site, suitable and sufficient signage, lights, barricades and enclosures (fences, sidewalk sheds, netting, bracing, etc.).
- Report unsafe or unhealthy conditions to the RE/CPM as soon as practical, but no more than 24 hours after discovery, and take prompt actions to remove or abate such conditions.
- Report any accidents involving injuries to workers or the general public, as well as property damage, to the RE/CPM within one (1) hour.
- Following an accident, the Contractor shall not remove or alter any equipment, structure, material, or evidence related to the accident. Exception: Immediate emergency procedures taken to secure structures, temporary construction, operations, or equipment that pose a continued imminent danger or facilitate assistance for persons who are trapped or who have sustained bodily injury.
- Notify the RE/CPM within one (1) hour of the start of an inspection by any outside regulatory agency personnel, including OSHA, NYC DOB or others.
- Maintain all records pertaining to all required compliance documents and accident and injury reports.
- Address DDC recommendations on safety, which shall in no way relieve the Contractor of its responsibilities for safety on the project. The Contractor has sole responsibility for safety.

V. SAFETY QUESTIONNAIRE

DDC requires that all Contractors provide information regarding their current and past safety performance and programs. This will be accomplished by the use of the DDC Safety Questionnaire. As a part of the bid submittal package, the contractor must submit a completed DDC Safety Questionnaire listing company workers' compensation experience modification rating and OSHA Incident Rates for the three (3) years prior to the date of the bid opening. DDC may request a Contractor to update its Questionnaire at any time or to provide more detailed information. The Contractor must provide the requested information within 15 days.

The following criteria will be used by DDC in reviewing the Contractor's responsibility, which will be based on the information provided on the questionnaire:

Criteria 1: OSHA Injury and Illness Rates (I&IR) are no greater than the average for the industry (based on the most current Bureau of Labor Statistics data for the Contractors SIC code); and

Criteria 2: Insurance workers compensation Experience Modification Rate (EMR) equal to or less than 1.0; and

Criteria 3: Any willful violations issued by OSHA or NYC DOB within the last three (3) years; and

Criteria 4: A fatality (worker or member of public) and injuries, requiring OSHA notification, experienced on or near Contractor's worksite within the last three (3) years; and

Criteria 5: Past safety performance on DDC projects (accidents; status of safety program and site safety plan submittals; etc.)

Criteria 6: OSHA violation history for the last three (3) years;

Criteria 7: Contractor shall provide OSHA Injury and Illness Records (currently OSHA 300 and 300A Logs) for the last three (3) years.

If the Contractor fails to meet the basic criteria listed above, the Construction Safety Unit may request, through the ACCO, more details concerning the Contractor's safety experience. DDC may request the Contractor to provide copies of, among other things, accident investigation reports, OSHA records, OSHA and NYC DOB citations, EPA citations and written corrective action plan.

VI. SAFETY PROGRAM AND SITE SAFETY PLAN

Within thirty (30) days from the Award Date, or as otherwise directed, the Contractor shall submit the following: (1) Safety Program, and (2) Site Safety Plan. The Safety Program shall set forth the Contractor's overall safety policy, regulatory compliance plan and minimum safety standards. The Site Safety Plan shall identify project work scope, safety hazards associated with the project tasks, and include specific safety procedures and training appropriate and necessary to complete the work. The Safety Program and the Site Safety Plan are subject to review and acceptance by the Construction Safety Unit prior to the commencement of work at the site. Failure by the Contractor to submit an acceptable Site Safety Plan and Safety Program shall be grounds for default.

Safety Program: Corporate Safety Program established by the Contractor that includes the Contractor's overall safety policy, regulatory compliance plan and basic safety procedures covering all aspects of construction operations, performed by the Contractor. The Safety Program shall be a written document with a separate section describing each element of the Safety Program. The Safety Program shall have at minimum the following elements applicable to the Contractor's operations:

- Responsibility and Organization – Contractor's company organization chart, including titles, names, contact information, roles and responsibilities for key personnel, etc.
- Safety Training Program – Contractor's corporate training program.
- Hazard Corrective Actions – Criteria for safety inspections, identification of safety non-compliances, implementation and verification of corrective actions, forms to document safety inspections results, etc.
- Accident/Exposure Investigation
- Recordkeeping and Reporting Injuries – Responsible staff; reporting and recording criteria; OSHA 300 and 300A form completion, etc.
- Fire Protection and Prevention Program
- Housekeeping
- Illumination
- Sanitation
- Personal Protective Equipment (PPE) – Company policy for the use of head protection, foot protection, hearing protection, eye and face protection, protective clothing, and any additional protective equipment based on work tasks; PPE inspection and replacement policy.
- Hazard Communication Program
- Employee Emergency Action Plan
- Protection of Underground Facilities and Utilities
- Ionizing/Nonionizing Radiation
- Material Handling, Storage, Use and Disposal
- Tools – Hand and Power
- Signs, Signals, and Barricades
- Scaffold – Local Law 52 requirements, installation, use, inspection, dismantling, training and general safety requirements.
- Welding and Cutting
- Electrical Safety
- Fall Protection
- Cranes, Derrick, Hoists, Elevators, Conveyors
- Excavation Safety
- Concrete and Masonry Construction
- Maintenance and Protection of Traffic
- Steel Erection
- Demolition
- Blasting and the Use of Explosives
- Stairways and Ladders

- Toxic and Hazardous Substances
- Alcohol and Drug Abuse Policy
- Rodents and Vermin
- Occupational Noise Exposure
- Confined Space Program – General confined Space Program: training requirements, confined space hazard evaluation procedure, atmospheric testing procedure, confined space classification, permit-required procedure, communication procedure, rescue procedure, forms, etc.
- Construction Vehicles/Heavy Equipment
- Dust Control Procedures

Site Safety Plan: The Site Safety Plan shall be a written document and shall apply to all project specific Contractor and subcontractor operations, and shall have at a minimum, the following elements with each element described in a separate section (It may be necessary to modify the basic format for certain unique or high-risk projects, such as tunnels or high-rise construction):

- Project Work Scope – Detailed information regarding work tasks that will be performed by contractor and subcontractors under the project.
- Responsibility and Organization – Contractor's organization chart with responsible staff for the project, including titles, names, contact information, roles and responsibilities.
- Safety Training and Education – OSHA 10 Hours training, requirements for daily safety briefings and weekly safety meetings, any work task specific training, responsible staff for implementation of training program for the project.
- Job Hazard Analysis (JHA) – Project specific Job Hazard Analysis including work tasks, identified hazards, hazard control methods (administrative, engineering, PPE), contractor's name, project id, location, name and signature of a certifying person, hazard assessment date.
- Protection of Public
- Hazard Corrective Actions – Responsible staff, forms, frequency of safety inspections and implementation of corrective actions.
- Accident/Exposure Investigation – Accident/incident notification procedure of DDC project staff. Project specific procedures for accident investigation and implementation of corrective actions.
- First Aid and Medical Attention – Responsible staff, location and inspection of First Aid kit, directions to local hospitals; emergency telephone numbers.
- Project Specific Fire Protection and Prevention Program.
- Project Specific Illumination Procedure.
- Project Specific Sanitation Procedure.
- Personal Protective Equipment (PPE)
- Hazard Communication Program – Responsible staff; training; SDS records, project specific list of chemical; location of the program and SDS records.
- Means of Egress – Information regarding free and unobstructed egress from all parts of the building or structure; exit marking; maintenance of means of egress, etc.
- Employee Emergency Action Plan – Project specific: responsible staff, emergency alarm system, evacuation procedure, procedure to account for employees after evacuation, etc.
- Evacuation Plan – Project specific evacuation plan (drawing/scheme) with exists and evacuation routes.
- Protection of Underground Facilities and Utilities, including responsible staff.
- Ionizing/Nonionizing Radiation – Competent person, license and qualification requirements, type of radiation, employees exposure and protection, etc.
- Material Handling, Storage, Use and Disposal – Project specific information regarding material storage and disposal.
- Signs, Signals, and Barricades – Use of danger/warning signs, sidewalk closure, safety instruction signs, pedestrian fencing and barricades, etc.
- Scaffold – Project specific scaffold types, training, scaffold drawings, competent person, criteria for project specific scaffold, falling object protection.

- Welding and Cutting – project specific procedure for welding and cutting, including all necessary safety requirements such as fire prevention, personal protective equipment, hot work permits, FDNY certificate requirements.
- Fall Protection – Project specific information regarding selected fall protection systems, fall protection plan.
- Cranes, Derrick, Hoists, Elevators, Conveyors – project specific equipment information including type, rated load capacity, manufacture specification requirements, competent person, exposure to falling load, inspection, recordkeeping, clearance requirements, communication procedure, ground lines, permits.
- Excavation Safety – Competent person, project specific protective system.
- Maintenance and Protection of Traffic Plan – Project specific MPT plan, flagmen training.
- Steel Erection – Site specific erection plan, requirements for applicable written notifications, competent person.
- Demolition – Engineering survey, including written evidence, disconnection of all effected utilities, identification of all hazardous chemicals, materials, gases, etc., floor openings, chutes, inspection and maintenance of all stairs/passageways, removal of materials/debris/structural elements, lock out/tag out, competent person.
- Blasting and the Use of Explosives – Project specific safety procedures, warning signs, training/qualification, transportation, storage and use of explosives, inspection.
- Toxic and Hazardous Substances – Safety procedures for substances to be used on project.
- Noise Mitigation Plan – Completed project specific Noise Mitigation Plan.
- Confined Space Program – Project specific Confined Space Program, responsible staff, training records, equipment information, rescue procedure, list of project specific confined spaces, forms.
- Construction Vehicles/Heavy Equipment – Type of construction vehicles/heavy equipment to be used on site.
- Dust Mitigation Plan – Completed project specific Dust Mitigation Plan.

The most critical component of the Site Safety Plan is the Job Hazard Analysis (JHA) section. The JHA form is a written document prepared by the contractor. The contractor must conduct a site and task assessment JHA to identify the major job steps and any potential safety or environmental hazards related to performance of the work, eliminate or implement controls for the potential hazards, and identify proper personal protective equipment for the task. The JHA shall be communicated to all contractor/subcontractor personnel on site.
The initial Job Hazard Assessment form shall be included in the contractor's Site Safety Plan and the current form shall be available at the construction site for reference.

Certain DDC programs, such as Job Order Contracting System (JOCS), may not necessarily require Site Safety Plans. The JOCS contractor shall submit a Safety Program. The Site Safety Plan requirement for the JOCS contractor will be determined by QA&CS based on a project work scope, construction activities and project location. In addition, certain DDC Operating Units may establish client-specific program or safety requirements. The contractor's Site Safety Plan must address such client-specific program or safety requirements.

VII. KICK-OFF MEETINGS/PRE-CONSTRUCTION AND SAFETY REVIEW

RE/CPM shall invite QA&CS Construction Safety Unit to the construction kick-off meeting. A QA&CS representative will participate in this meeting with the Contractor and RE/CPM prior to the start of the project for the purpose of:

A. Reviewing the safety issues detailed in the contract.
B. Reviewing the Site Safety Plan.
C. Reviewing any new issues or information that was not previously addressed.
D. Discussing planned inspections and audits of the site by QA&CS personnel.

VIII. EVALUATION DURING WORK IN PROGRESS

The Contractor's adherence to these Safety Requirements will be monitored throughout the project. This will be accomplished by the following:

A. Use of a safety checklist by a representative of the Construction Safety Unit or other designated DDC representative or Consultant during regular, unannounced inspections of the job site. Field Exit Conferences will be held with the RE/CPM, Contractor Project Safety Representatives.

B. The RE/CPM will continually monitor the safety and environmental performance of the contractor's employees and work methods. Deficiencies shall be brought to the attention of the contractor's representative on site for immediate correction. The DDC representative will maintain a written record of these deficiencies and have these records available upon request. Any critical deficiencies shall be immediately reported to QA&CS phone# (718) 391-1624 or (718) 391-1911.

C. If the Contractor's safety performance during the project is not up to DDC standards (safety performance measure, accident/incident rate, etc.) the Director – QA&CS, or his/her designee will meet with the Contractor's Project Safety Representative and or Project Safety Manager, the DDC Project Manager, the RE/CPM, and the DDC Environmental Specialist (if environmental issues are involved). The purpose of this meeting is to 1) determine the level of non-compliance; 2) explain and clarify the safety/environmental provisions; 3) agree on a future course of action to correct the deficiencies.

D. If the deficiencies continue to occur with inadequate attention by the contractor, this shall, among other remedies available, be grounds for default.

E. The contractor shall within 1 hour inform the RE/CPM/CM of all accidents/incidents including all fatalities, any injuries to employees or members of the general public, and property damage (e.g., structural damage, equipment rollovers, utility damage, loads dropped from crane). The RE/CPM shall notify the Construction Safety Unit as per DDC's Construction Safety Emergency and Accident Notification and Response Protocol and shall maintain a record of all contractor accidents/incidents for the project.

F. The Construction Safety Unit shall be notified within two (2) hours of the start of any NYS-DOL/ NYC-COSH/ OSHA/ EPA inspections.

IX. SAFETY PERFORMANCE EVALUATION

The contractor's safety record, including accident/incident history and DDC safety inspection results, will be considered as part of the Contractor's performance evaluation at the conclusion of the project. Poor safety performance during the course of the project shall be a reason to rate a Contractor unsatisfactory which may be reflected in the City's Vendex system and will be considered for future procurement actions as set forth in the City's Procurement Policy Board Rules.

CITY OF NEW YORK

STANDARD CONSTRUCTION CONTRACT

DECEMBER 2013

(NO TEXT ON THIS PAGE)

CITY OF NEW YORK
STANDARD CONSTRUCTION CONTRACT

TABLE OF CONTENTS

CHAPTER I
THE CONTRACT AND DEFINITIONS

ARTICLE 1.	THE CONTRACT	1
ARTICLE 2.	DEFINITIONS	1

CHAPTER II
THE WORK AND ITS PERFORMANCE

ARTICLE 3.	CHARACTER OF THE WORK	4
ARTICLE 4.	MEANS AND METHODS OF CONSTRUCTION	4
ARTICLE 5.	COMPLIANCE WITH LAWS	5
ARTICLE 6.	INSPECTION	10
ARTICLE 7.	PROTECTION OF WORK AND OF PERSONS AND PROPERTY; NOTICES AND INDEMNIFICATION	11

CHAPTER III
TIME PROVISIONS

ARTICLE 8.	COMMENCEMENT AND PROSECUTION OF THE WORK	12
ARTICLE 9.	PROGRESS SCHEDULES	12
ARTICLE 10.	REQUESTS FOR INFORMATION OR APPROVAL	13
ARTICLE 11.	NOTICE OF CONDITIONS CAUSING DELAY AND DOCUMENTATION OF DAMAGES CAUSED BY DELAY	13
ARTICLE 12.	COORDINATION WITH OTHER CONTRACTORS	17
ARTICLE 13.	EXTENSION OF TIME FOR PERFORMANCE	18
ARTICLE 14.	COMPLETION AND FINAL ACCEPTANCE OF THE WORK	21
ARTICLE 15.	LIQUIDATED DAMAGES	22
ARTICLE 16.	OCCUPATION OR USE PRIOR TO COMPLETION	22

CHAPTER IV
SUBCONTRACTS AND ASSIGNMENTS

ARTICLE 17.	SUBCONTRACTS	23
ARTICLE 18.	ASSIGNMENTS	25

CITY OF NEW YORK
STANDARD CONSTRUCTION CONTRACT

TABLE OF CONTENTS

CHAPTER V
CONTRACTOR'S SECURITY AND GUARANTY

ARTICLE 19.	SECURITY DEPOSIT	26
ARTICLE 20.	PAYMENT GUARANTEE	26
ARTICLE 21.	RETAINED PERCENTAGE	29
ARTICLE 22.	INSURANCE	29
ARTICLE 23.	MONEY RETAINED AGAINST CLAIMS	35
ARTICLE 24.	MAINTENANCE AND GUARANTY	36

CHAPTER VI
CHANGES, EXTRA WORK AND DOCUMENTATION OF CLAIM

ARTICLE 25.	CHANGES	37
ARTICLE 26.	METHODS OF PAYMENT FOR OVERRUNS AND EXTRA WORK	37
ARTICLE 27.	RESOLUTION OF DISPUTES	40
ARTICLE 28.	RECORD KEEPING FOR EXTRA OR DISPUTED WORK OR WORK ON A TIME & MATERIALS BASIS	44
ARTICLE 29.	OMITTED WORK	45
ARTICLE 30.	NOTICE AND DOCUMENTATION OF COSTS AND DAMAGES; PRODUCTION OF FINANCIAL RECORDS	45

CHAPTER VII
POWERS OF THE RESIDENT ENGINEER, THE ENGINEER OR ARCHITECT AND THE COMMISSIONER

ARTICLE 31.	THE RESIDENT ENGINEER	46
ARTICLE 32.	THE ENGINEER OR ARCHITECT OR PROJECT MANAGER	47
ARTICLE 33.	THE COMMISSIONER	47
ARTICLE 34.	NO ESTOPPEL	48

CHAPTER VIII
LABOR PROVISIONS

ARTICLE 35.	EMPLOYEES	48
ARTICLE 36.	NO DISCRIMINATION	50
ARTICLE 37.	LABOR LAW REQUIREMENTS	52
ARTICLE 38.	PAYROLL REPORTS	57
ARTICLE 39.	DUST HAZARDS	58

TABLE OF CONTENTS

CHAPTER IX
PARTIAL AND FINAL PAYMENTS

ARTICLE 40.	CONTRACT PRICE	58
ARTICLE 41.	BID BREAKDOWN ON LUMP SUM	58
ARTICLE 42.	PARTIAL PAYMENTS	58
ARTICLE 43.	PROMPT PAYMENT	59
ARTICLE 44.	SUBSTANTIAL COMPLETION PAYMENT	59
ARTICLE 45.	FINAL PAYMENT	60
ARTICLE 46.	ACCEPTANCE OF FINAL PAYMENT	61
ARTICLE 47.	APPROVAL BY PUBLIC DESIGN COMMISSION	62

CHAPTER X
CONTRACTOR'S DEFAULT

ARTICLE 48.	COMMISSIONER'S RIGHT TO DECLARE CONTRACTOR IN DEFAULT	62
ARTICLE 49.	EXERCISE OF THE RIGHT TO DECLARE DEFAULT	64
ARTICLE 50.	QUITTING THE SITE	64
ARTICLE 51.	COMPLETION OF THE WORK	64
ARTICLE 52.	PARTIAL DEFAULT	64
ARTICLE 53.	PERFORMANCE OF UNCOMPLETED WORK	65
ARTICLE 54.	OTHER REMEDIES	65

CHAPTER XI
MISCELLANEOUS PROVISIONS

ARTICLE 55.	CONTRACTOR'S WARRANTIES	66
ARTICLE 56.	CLAIMS AND ACTIONS THEREON	66
ARTICLE 57.	INFRINGEMENT	66
ARTICLE 58.	NO CLAIM AGAINST OFFICERS, AGENTS OR EMPLOYEES	67
ARTICLE 59.	SERVICE OF NOTICES	67
ARTICLE 60.	UNLAWFUL PROVISIONS DEEMED STRICKEN FROM CONTRACT	67
ARTICLE 61.	ALL LEGAL PROVISIONS DEEMED INCLUDED	67
ARTICLE 62.	TAX EXEMPTION	67
ARTICLE 63.	INVESTIGATION(S) CLAUSE	69
ARTICLE 64.	TERMINATION BY THE CITY	71
ARTICLE 65.	CHOICE OF LAW, CONSENT TO JURISDICTION AND VENUE	73

TABLE OF CONTENTS

CHAPTER XI (CONT'D)
MISCELLANEOUS PROVISIONS

ARTICLE 66.	PARTICIPATION IN AN INTERNATIONAL BOYCOTT	74
ARTICLE 67.	LOCALLY BASED ENTERPRISE PROGRAM	74
ARTICLE 68.	ANTITRUST	75
ARTICLE 69.	MACBRIDE PRINCIPLES PROVISIONS	75
ARTICLE 70	ELECTRONIC FILING/NYC DEVELOPMENT HUB	77
ARTICLE 71.	PROHIBITION OF TROPICAL HARDWOODS	77
ARTICLE 72.	CONFLICTS OF INTEREST	78
ARTICLE 73.	MERGER CLAUSE	78
ARTICLE 74.	STATEMENT OF WORK	78
ARTICLE 75.	COMPENSATION TO BE PAID TO CONTRACTOR	78
ARTICLE 76:	ELECTRONIC FUNDS TRANSFER	78
ARTICLE 77:	RECORDS RETENTION	79
ARTICLE 78:	PARTICIPATION BY MINORITY-OWNED AND WOMEN-OWNED BUSINESS ENTERPRISES IN CITY PROCUREMENT	79

SIGNATURES	87
ACKNOWLEDGMENT BY CORPORATION	88
ACKNOWLEDGMENT BY PARTNERSHIP	88
ACKNOWLEDGMENT BY INDIVIDUAL	88
ACKNOWLEDGMENT BY COMMISSIONER	89
AUTHORITY	90
COMPTROLLER'S CERTIFICATE	90
MAYOR'S CERTIFICATE	91
PERFORMANCE BOND #1	92
PERFORMANCE BOND #2	96
PAYMENT BOND	100

WITNESSETH:

The parties, in consideration of the mutual agreements contained herein, agree as follows:

CHAPTER I
THE CONTRACT AND DEFINITIONS

ARTICLE 1. THE CONTRACT

1.1 Except for titles, subtitles, headings, running headlines, tables of contents and indices (all of which are printed herein merely for convenience), the following, except for such portions thereof as may be specifically excluded, shall be deemed to be part of this Contract:

1.1.1 All provisions required by law to be inserted in this Contract, whether actually inserted or not;

1.1.2 The Contract Drawings and Specifications;

1.1.3 The General Conditions and Special Conditions, if any;

1.1.4 The Contract;

1.1.5 The Information for Bidders; Request for Proposals; Notice of Solicitation and Proposal For Bids; Bid or Proposal, and, if used, the Bid Booklet;

1.1.6 All Addenda issued prior to the receipt of the bids; the Notice of Award; Performance and Payment Bonds, if required; and the Notice to Proceed or the Order to Work.

1.2 Should any conflict occur in or between the Drawings and Specifications, the Contractor shall be deemed to have estimated the most expensive way of doing the Work, unless the Contractor shall have asked for and obtained a decision in writing from the Commissioner of the Agency that is entering into this Contract, before the submission of its bid, as to what shall govern.

ARTICLE 2. DEFINITIONS

2.1 The following words and expressions, or pronouns used in their stead, shall, wherever they appear in this Contract, be construed as follows, unless a different meaning is clear from the context:

2.1.1 **"Addendum"** or **"Addenda"** shall mean the additional Contract provisions and/or technical clarifications issued in writing by the Commissioner prior to the receipt of bids.

2.1.2 **"Agency"** shall mean a city, county, borough or other office, position, department, division, bureau, board or commission, or a corporation, institution or agency of government, the expenses of which are paid in whole or in part from the City treasury.

2.1.3 **"Agency Chief Contracting Officer" (ACCO)** shall mean a person delegated authority by the Commissioner to organize and supervise the procurement activity of subordinate Agency staff in conjunction with the CCPO, or his/her duly authorized representative.

2.1.4 **"Allowance"** shall mean a sum of money which the Agency may include in the total amount of the Contract for such specific contingencies as the Agency believes may be necessary to complete the Work, *e.g.*, lead or asbestos remediation, and for which the Contractor will be paid on the basis of stipulated unit prices or a formula set forth in the Contract or negotiated between the parties provided, however, that if the Contractor is not directed to use the Allowance, the Contractor shall have no right to such money and it shall be deducted from the total amount of the Contract.

2.1.5 **"City"** shall mean the City of New York.

2.1.6 **"City Chief Procurement Officer" (CCPO)** shall mean a person delegated authority by the Mayor to coordinate and oversee the procurement activity of Mayoral agency staff, including the ACCO and any offices which have oversight responsibility for the procurement of construction, or his/her duly authorized representative.

2.1.7 **"Commissioner"** shall mean the head of the Agency that has entered into this Contract, or his/her duly authorized representative.

2.1.8 **"Comptroller"** shall mean the Comptroller of the City of New York.

2.1.9 **"Contract"** or **"Contract Documents"** shall mean each of the various parts of the contract referred to in Article 1 hereof, both as a whole and severally.

2.1.10 **"Contract Drawings"** shall mean only those drawings specifically entitled as such and listed in the Specifications or in any Addendum, or any drawings furnished by the Commissioner, pertaining or supplemental thereto.

2.1.11 **"Contract Work"** shall mean everything required to be furnished and done by the Contractor by any one or more of the parts of the Contract referred to in Article 1, except Extra Work as hereinafter defined.

2.1.12 **"Contractor"** shall mean the entity which executed this Contract, whether a corporation, firm, partnership, joint venture, individual, or any combination thereof, and its, their, his/her successors, personal representatives, executors, administrators, and assigns, and any person, firm, partnership, joint venture, individual, or corporation which shall at any time be substituted in the place of the Contractor under this Contract.

2.1.13 **"Days"** shall mean calendar days, except where otherwise specified.

2.1.14 **"Engineer"** or **"Architect"** or **"Project Manager"** shall mean the person so designated in writing by the Commissioner in the Notice to Proceed or the Order to Work to act as such in relation to this Contract, including a private Architect or Engineer or Project Manager, as the case may be. Subject to written approval by the Commissioner, the Engineer, Architect or Project Manager may designate an authorized representative.

2.1.15 **"Engineering Audit Officer" (EAO)** shall mean the person so designated by the Commissioner to perform responsible auditing functions hereunder.

2.1.16 **"Extra Work"** shall mean Work other than that required by the Contract at the time of award which is authorized by the Commissioner pursuant to Chapter VI of this Contract.

2.1.17 **"Federal-Aid Contract"** shall mean a contract in which the United States (federal) Government provides financial funding as so designated in the Information for Bidders.

2.1.18 **"Final Acceptance"** shall mean final written acceptance of all the Work by the Commissioner, a copy of which shall be sent to the Contractor.

2.1.19 **"Final Approved Punch List"** shall mean a list, approved pursuant to Article 14.2.2, specifying those items of Work to be completed by the Contractor after Substantial Completion and dates for the completion of each item of Work.

2.1.20 **"Law"** or **"Laws"** shall mean the Constitution of the State of New York, the New York City Charter, the New York City Administrative Code, a statute of the United States or of the State of New York, a local law of the City of New York, any ordinance, rule or regulation having the force of law, or common law.

2.1.21 **"Materialman"** shall mean any corporation, firm, partnership, joint venture, or individual, other than employees of the Contractor, who or which contracts with the Contractor or any Subcontractor, to fabricate or deliver, or who actually fabricates or delivers, plant, materials or equipment to be incorporated in the Work.

2.1.22 **"Means and Methods of Construction"** shall mean the labor, materials, temporary structures, tools, plant, and construction equipment, and the manner and time of their use, necessary to accomplish the result intended by this Contract.

2.1.23**"Notice to Proceed" or "Order to Work"** shall mean the written notice issued by the Commissioner specifying the time for commencement of the Work and the Engineer, Architect or Project Manager.

2.1.24 **"Other Contractor(s)"** shall mean any contractor (other than the entity which executed this Contract or its Subcontractors) who or which has a contract with the City for work on or adjacent to the building or Site of the Work.

2.1.25 **"Payroll Taxes"** shall mean State Unemployment Insurance (SUI), Federal Unemployment Insurance (FUI), and payments pursuant to the Federal Insurance Contributions Act (FICA).

2.1.26 **"Project"** shall mean the public improvement to which this Contract relates.

2.1.27 **"Procurement Policy Board" (PPB)** shall mean the Agency of the City of New York whose function is to establish comprehensive and consistent procurement policies and rules which shall have broad application throughout the City.

2.1.28 **"Required Quantity"** in a unit price Contract shall mean the actual quantity of any item of Work or materials which is required to be performed or furnished in order to comply with the Contract.

2.1.29 **"Resident Engineer"** shall mean the representative of the Commissioner duly designated by the Commissioner to be his/her representative at the site of the Work.

2.1.30 **"Site"** shall mean the area upon or in which the Contractor's operations are carried on, and such other areas adjacent thereto as may be designated as such by the Engineer.

2.1.31 **"Small Tools"** shall mean items that are ordinarily required for a worker's job function, including but not limited to, equipment that ordinarily has no licensing, insurance

or substantive storage costs associated with it; such as circular and chain saws, impact drills, threaders, benders, wrenches, socket tools, etc.

2.1.32 **"Specifications"** shall mean all of the directions, requirements, and standards of performance applying to the Work as hereinafter detailed and designated under the Specifications.

2.1.33 **"Subcontractor"** shall mean any person, firm or corporation, other than employees of the Contractor, who or which contracts with the Contractor or with its subcontractors to furnish, or actually furnishes labor, or labor and materials, or labor and equipment, or superintendence, supervision and/or management at the Site. Wherever the word Subcontractor appears, it shall also mean sub-Subcontractor.

2.1.34 **"Substantial Completion"** shall mean the written determination by the Engineer that the Work required under this Contract is substantially, but not entirely, complete and the approval of the **Final Approved Punch List**.

2.1.35 **"Work"** shall mean all services required to complete the Project in accordance with the Contract Documents, including without limitation, labor, material, superintendence, management, administration, equipment, and incidentals, and obtaining any and all permits, certifications and licenses as may be necessary and required to complete the Work, and shall include both Contract Work and Extra Work.

CHAPTER II
THE WORK AND ITS PERFORMANCE

ARTICLE 3. CHARACTER OF THE WORK

3.1 Unless otherwise expressly provided in the **Contract Drawings**, **Specifications,** and **Addenda**, the **Work** shall be performed in accordance with the best modern practice, utilizing, unless otherwise specified in writing, new and unused materials of standard first grade quality and workmanship and design of the highest quality, to the satisfaction of the **Commissioner**.

ARTICLE 4. MEANS AND METHODS OF CONSTRUCTION

4.1 Unless otherwise expressly provided in the **Contract Drawings**, **Specifications,** and **Addenda**, the **Means and Methods of Construction** shall be such as the **Contractor** may choose; subject, however, to the **Engineer's** right to reject the **Means and Methods of Construction** proposed by the **Contractor** which in the opinion of the **Engineer**:

4.1.1 Will constitute or create a hazard to the **Work**, or to persons or property; or

4.1.2 Will not produce finished **Work** in accordance with the terms of the **Contract**; or

4.1.3 Will be detrimental to the overall progress of the **Project**.

4.2 The **Engineer's** approval of the **Contractor's Means and Methods of Construction**, or his/her failure to exercise his/her right to reject such means or methods, shall not relieve the **Contractor** of its obligation to complete the **Work** as provided in this **Contract**; nor shall the exercise of such right to reject create a cause of action for damages.

ARTICLE 5. COMPLIANCE WITH LAWS

5.1 The **Contractor** shall comply with all **Laws** applicable to this **Contract** and to the **Work** to be done hereunder.

5.2 Procurement Policy Board Rules: This **Contract** is subject to the Rules of the **PPB** ("**PPB** Rules") in effect at the time of the bid opening for this **Contract**. In the event of a conflict between the **PPB** Rules and a provision of this **Contract**, the **PPB** Rules shall take precedence.

5.3 Noise Control Code provisions.

5.3.1 In accordance with the provisions of Section 24-216(b) of the Administrative Code of the **City** ("Administrative Code"), Noise Abatement Contract Compliance, devices and activities which will be operated, conducted, constructed or manufactured pursuant to this **Contract** and which are subject to the provisions of the **City** Noise Control Code shall be operated, conducted, constructed, or manufactured without causing a violation of the Administrative Code. Such devices and activities shall incorporate advances in the art of noise control development for the kind and level of noise emitted or produced by such devices and activities, in accordance with regulations issued by the **Commissioner** of the **City** Department of Environmental Protection.

5.3.2 The **Contractor** agrees to comply with Section 24-219 of the Administrative Code and implementing rules codified at 15 Rules of the City of New York ("RCNY") Section 28-100 *et seq*. In accordance with such provisions, the **Contractor**, if the **Contractor** is the responsible party under such regulations, shall prepare and post a Construction Noise Mitigation Plan at each **Site**, in which the **Contractor** shall certify that all construction tools and equipment have been maintained so that they operate at normal manufacturers operating specifications. If the **Contractor** cannot make this certification, it must have in place an Alternative Noise Mitigation Plan approved by the **City** Department of Environmental Protection. In addition, the **Contractor**'s certified Construction Noise Mitigation Plan is subject inspection by the **City** Department of Environmental Protection in accordance with Section 28-101 of Title 15 of RCNY. No **Contract Work** may take place at a **Site** unless there is a Construction Noise Mitigation Plan or approved Alternative Noise Mitigation Plan in place. In addition, the **Contractor** shall create and implement a noise mitigation training program. Failure to comply with these requirements may result in fines and other penalties pursuant to the applicable provisions of the Administrative Code and RCNY.

5.4 Ultra Low Sulfur Diesel Fuel: In accordance with the provisions of Section 24-163.3 of the Administrative Code, the **Contractor** specifically agrees as follows:

5.4.1 Definitions. For purposes of this Article 5.4, the following definitions apply:

5.4.1(a) "Contractor" means any person or entity that enters into a Public Works Contract with a **City Agency**, or any person or entity that enters into an agreement with such person or entity, to perform work or provide labor or services related to such Public Works Contract.

5.4.1(b) "Motor Vehicle" means any self-propelled vehicle designed for transporting persons or property on a street or highway.

5.4.1(c) "Nonroad Engine" means an internal combustion engine (including the fuel system) that is not used in a Motor Vehicle or a vehicle used solely for competition, or that is not subject to standards promulgated under Section 7411 or Section 7521 of

Title 42 of the United States Code, except that this term shall apply to internal combustion engines used to power generators, compressors or similar equipment used in any construction program or project.

5.4.1(d) "Nonroad Vehicle" means a vehicle that is powered by a Nonroad Engine, fifty (50) horsepower and greater, and that is not a Motor Vehicle or a vehicle used solely for competition, which shall include, but not be limited to, excavators, backhoes, cranes, compressors, generators, bulldozers, and similar equipment, except that this term shall not apply to horticultural maintenance vehicles used for landscaping purposes that are powered by a Nonroad Engine of sixty-five (65) horsepower or less and that are not used in any construction program or project.

5.4.1(e) "Public Works Contract" means a contract with a **City Agency** for a construction program or project involving the construction, demolition, restoration, rehabilitation, repair, renovation, or abatement of any building, structure, tunnel, excavation, roadway, park or bridge; a contract with a **City Agency** for the preparation for any construction program or project involving the construction, demolition, restoration, rehabilitation, repair, renovation, or abatement of any building, structure, tunnel, excavation, roadway, park or bridge; or a contract with a **City Agency** for any final work involved in the completion of any construction program or project involving the construction, demolition, restoration, rehabilitation, repair, renovation, or abatement of any building, structure, tunnel, excavation, roadway, park or bridge.

5.4.1(f) "Ultra Low Sulfur Diesel Fuel" means diesel fuel that has a sulfur content of no more than fifteen parts per million (15 ppm).

5.4.2 Ultra Low Sulfur Diesel Fuel

5.4.2(a) All **Contractors** shall use Ultra Low Sulfur Diesel Fuel in diesel-powered Nonroad Vehicles in the performance of this **Contract**.

5.4.2(b) Notwithstanding the requirements of Article 5.4.2(a), **Contractors** may use diesel fuel that has a sulfur content of no more than thirty parts per million (30 ppm) to fulfill the requirements of this Article 5.4.2, where the Commissioner of the **City** Department of Environmental Protection ("DEP Commissioner") has issued a determination that a sufficient quantity of Ultra Low Sulfur Diesel Fuel is not available to meet the needs of **Agencies** and **Contractors**. Any such determination shall expire after six (6) months unless renewed.

5.4.2(c) **Contractors** shall not be required to comply with this Article 5.4.2 where the **City Agency** letting this **Contract** makes a written finding, which is approved, in writing, by the DEP Commissioner, that a sufficient quantity of Ultra Low Sulfur Diesel Fuel, or diesel fuel that has a sulfur content of no more than thirty parts per million (30 ppm) is not available to meet the requirements of Section 24-163.3 of the Administrative Code, provided that such **Contractor** in its fulfillment of the requirements of this **Contract**, to the extent practicable, shall use whatever quantity of Ultra Low Sulfur Diesel Fuel or diesel fuel that has a sulfur content of no more than thirty parts per million (30 ppm) is available. Any finding made pursuant to this Article 5.4.2(c) shall expire after sixty (60) **Days**, at which time the requirements of this Article 5.4.2 shall be in full force and effect unless the **City Agency** renews the finding in writing and such renewal is approved by the DEP Commissioner.

5.4.2(d) **Contractors** may check on determinations and approvals issued by the DEP Commissioner pursuant to Section 24-163.3 of the Administrative Code, if any, at www.dep.nyc.gov or by contacting the **City Agency** letting this **Contract.**

5.4.2(e) The requirements of this Article 5.4.2 do not apply where they are precluded by federal or State funding requirements or where the **Contract** is an emergency procurement.

5.4.3 Best Available Technology

5.4.3(a) All **Contractors** shall utilize the best available technology for reducing the emission of pollutants for diesel-powered Nonroad Vehicles in the performance of this **Contract.** For determinations of best available technology for each type of diesel-powered Nonroad Vehicle, **Contractors** shall comply with the regulations of the **City** Department of Environmental Protection, as and when adopted, Chapter 14 of Title 15 of the Rules of the City of New York (RCNY). The **Contractor** shall fully document all steps in the best available technology selection process and shall furnish such documentation to the **City Agency** or the DEP Commissioner upon request. The **Contractor** shall retain all documentation generated in the best available technology selection process for as long as the selected best available technology is in use.

5.4.3(b) No **Contractor** shall be required to replace best available technology for reducing the emission of pollutants or other authorized technology utilized for a diesel-powered Nonroad Vehicle in accordance with the provisions of this Article 5.4.3 within three (3) years of having first utilized such technology for such vehicle.

5.4.3(c) This Article 5.4.3 shall not apply to any vehicle used to satisfy the requirements of a specific Public Works Contract for fewer than twenty (20) **Days.**

5.4.3(d) The **Contractor** shall not be required to comply with this Article 5.4.3 with respect to a diesel-powered Nonroad Vehicle under the following circumstances:

5.4.3(d)(i) Where the **City Agency** makes a written finding, which is approved, in writing, by the DEP Commissioner, that the best available technology for reducing the emission of pollutants as required by this Article 5.4.3 is unavailable for such vehicle, the **Contractor** shall use whatever technology for reducing the emission of pollutants, if any, is available and appropriate for such vehicle.

5.4.3(d)(ii) Where the DEP Commissioner has issued a written waiver based upon the **Contractor** having demonstrated to the DEP Commissioner that the use of the best available technology for reducing the emission of pollutants might endanger the operator of such vehicle or those working near such vehicle, due to engine malfunction, the **Contractor** shall use whatever technology for reducing the emission of pollutants, if any, is available and appropriate for such vehicle, which would not endanger the operator of such vehicle or those working near such vehicle.

5.4.3(d)(iii) In determining which technology to use for the purposes of Articles 5.4.3(d)(i) and 5.4.3(d)(ii) above, the **Contractor** shall primarily consider the reduction in emissions of particulate matter and secondarily consider the reduction in emissions of nitrogen oxides associated with the use of such

technology, which shall in no event result in an increase in the emissions of either such pollutant.

5.4.3(d)(iv) The **Contractor** shall submit requests for a finding or a waiver pursuant to this Article 5.4.3(d) in writing to the DEP Commissioner, with a copy to the **ACCO** of the **City Agency** letting this **Contract**. Any finding or waiver made or issued pursuant to Articles 5.4.3(d)(i) and 5.4.3(d)(ii) above shall expire after one hundred eighty (180) **Days**, at which time the requirements of Article 5.4.3(a) shall be in full force and effect unless the **City Agency** renews the finding, in writing, and the DEP Commissioner approves such finding, in writing, or the DEP Commissioner renews the waiver, in writing.

5.4.3(e) The requirements of this Article 5.4.3 do not apply where they are precluded by federal or State funding requirements or where the **Contract** is an emergency procurement.

5.4.4 Section 24-163 of the Administrative Code. The **Contractor** shall comply with Section 24-163 of the Administrative Code related to the idling of the engines of motor vehicles while parking.

5.4.5 Compliance

5.4.5(a) The **Contractor's** compliance with Article 5.4 may be independently monitored. If it is determined that the **Contractor** has failed to comply with any provision of Article 5.4, any costs associated with any independent monitoring incurred by the **City** shall be reimbursed by the **Contractor**.

5.4.5(b) Any **Contractor** who violates any provision of Article 5.4, except as provided in Article 5.4.5(c) below, shall be liable for a civil penalty between the amounts of one thousand ($1,000) and ten thousand ($10,000) dollars, in addition to twice the amount of money saved by such **Contractor** for failure to comply with Article 5.4.

5.4.5(c) No **Contractor** shall make a false claim with respect to the provisions of Article 5.4 to a **City Agency**. Where a **Contractor** has been found to have done so, such **Contractor** shall be liable for a civil penalty of twenty thousand ($20,000) dollars, in addition to twice the amount of money saved by such **Contractor** in association with having made such false claim.

5.4.6 Reporting

5.4.6(a) For all Public Works Contracts covered by this Article 5.4, the **Contractor** shall report to the **City Agency** the following information:

5.4.6(a)(i) The total number of diesel-powered Nonroad Vehicles used to fulfill the requirements of this Public Works Contract;

5.4.6(a)(ii) The number of such Nonroad Vehicles that were powered by Ultra Low Sulfur Diesel Fuel;

5.4.6(a)(iii) The number of such Nonroad Vehicles that utilized the best available technology for reducing the emission of pollutants, including a breakdown by vehicle model and the type of technology;

5.4.6(a)(iv) The number of such Nonroad Vehicles that utilized such other authorized technology in accordance with Article 5.4.3, including a breakdown by vehicle model and the type of technology used for each such vehicle;

5.4.6(a)(v) The locations where such Nonroad Vehicles were used; and

5.4.6(a)(vi) Where a determination is in effect pursuant to Article 5.4.2(b) or 5.4.2(c), detailed information concerning the **Contractor's** efforts to obtain Ultra Low Sulfur Diesel Fuel or diesel fuel that has a sulfur content of no more than thirty parts per million (30 ppm).

5.4.6(b) The **Contractor** shall submit the information required by Article 5.4.6(a) at the completion of **Work** under the Public Works Contract and on a yearly basis no later than August 1 throughout the term of the Public Works Contract. The yearly report shall cover **Work** performed during the preceding fiscal year (July 1 - June 30).

5.5 Ultra Low Sulfur Diesel Fuel. In accordance with the Coordinated Construction Act for Lower Manhattan, as amended:

5.5.1 Definitions. For purposes of this Article 5.5, the following definitions apply:

5.5.1(a) "Lower Manhattan" means the area to the south of and within the following lines: a line beginning at a point where the United States pierhead line in the Hudson River as it exists now or may be extended would intersect with the southerly line of West Houston Street in the Borough of Manhattan extended, thence easterly along the southerly side of West Houston Street to the southerly side of Houston Street, thence easterly along the southerly side of Houston Street to the southerly side of East Houston Street, thence northeasterly along the southerly side of East Houston Street to the point where it would intersect with the United States pierhead line in the East River as it exists now or may be extended, including tax lots within or immediately adjacent thereto.

5.5.1(b) "Lower Manhattan Redevelopment Project" means any project in Lower Manhattan that is funded in whole or in part with federal or State funding, or any project intended to improve transportation between Lower Manhattan and the two air terminals in the **City** known as LaGuardia Airport and John F. Kennedy International Airport, or between Lower Manhattan and the air terminal in Newark known as Newark Liberty International Airport, and that is funded in whole or in part with federal funding.

5.5.1(c) "Nonroad Engine" means an internal combustion engine (including the fuel system) that is not used in a Motor Vehicle or a vehicle used solely for competition, or that is not subject to standards promulgated under Section 7411 or Section 7521 of Title 42 of the United States Code, except that this term shall apply to internal combustion engines used to power generators, compressors or similar equipment used in any construction program or project.

5.5.1(d) "Nonroad Vehicle" means a vehicle that is powered by a Nonroad Engine, fifty (50) horsepower (HP) and greater, and that is not a Motor Vehicle or a vehicle used solely for competition, which shall include, but not be limited to, excavators, backhoes, cranes, compressors, generators, bulldozers, and similar equipment, except

that this terms shall not apply to horticultural maintenance vehicles used for landscaping purposes that are powered by a Nonroad Engine of sixty-five (65) HP or less and that are not used in any construction program or project.

5.5.1(e) "Ultra Low Sulfur Diesel Fuel" means diesel fuel that has a sulfur content of no more than fifteen parts per million (15 ppm).

5.5.2 Requirements. **Contractors** and **Subcontractors** are required to use only Ultra Low Sulfur Diesel Fuel to power the diesel-powered Nonroad Vehicles with engine HP rating of fifty (50) HP and above used on a Lower Manhattan Redevelopment Project and, where practicable, to reduce the emission of pollutants by retrofitting such Nonroad Vehicles with oxidation catalysts, particulate filters, or technology that achieves lowest particulate matter emissions.

5.6 Pesticides. In accordance with Section 17-1209 of the Administrative Code, to the extent that the **Contractor** or any **Subcontractor** applies pesticides to any property owned or leased by the **City**, the **Contractor,** and any **Subcontractor** shall comply with Chapter 12 of the Administrative Code.

5.7 Waste Treatment, Storage, and Disposal Facilities and Transporters. In connection with the **Work**, the **Contractor** and any **Subcontractor** shall use only those waste treatment, storage, and disposal facilities and waste transporters that possess the requisite license, permit or other governmental approval necessary to treat, store, dispose, or transport the waste, materials or hazardous substances.

5.8 Environmentally Preferable Purchasing. The **Contractor** shall ensure that products purchased or leased by the **Contractor** or any **Subcontractor** for the **Work** that are not specified by the **City** or are submitted as equivalents to a product specified by the **City** comply with the requirements of the New York City Environmentally Preferable Purchasing Program contained in Chapter 11 of Title 43 of the RCNY, pursuant to Chapter 3 of Title 6 of the Administrative Code.

ARTICLE 6. INSPECTION

6.1 During the progress of the **Work** and up to the date of **Final Acceptance**, the **Contractor** shall at all times afford the representatives of the **City** every reasonable, safe, and proper facility for inspecting all **Work** done or being done at the **Site** and also for inspecting the manufacture or preparation of materials and equipment at the place of such manufacture or preparation.

6.2 The **Contractor's** obligation hereunder shall include the uncovering or taking down of finished **Work** and its restoration thereafter; provided, however, that the order to uncover, take down and restore shall be in writing, and further provided that if **Work** thus exposed proves satisfactory, and if the **Contractor** has complied with Article 6.1, such uncovering or taking down and restoration shall be considered an item of **Extra Work** to be paid for in accordance with the provisions of Article 26. If the **Work** thus exposed proves unsatisfactory, the **City** has no obligation to compensate the **Contractor** for the uncovering, taking down or restoration.

6.3 Inspection and approval by the **Commissioner**, the **Engineer**, **Project Manager**, or **Resident Engineer**, of finished **Work** or of **Work** being performed, or of materials and equipment at the place of manufacture or preparation, shall not relieve the **Contractor** of its obligation to perform the **Work** in strict accordance with the **Contract**. Finished or unfinished **Work** not found to be in strict accordance with the **Contract** shall be replaced as directed by the **Engineer**, even though such **Work** may have been previously approved and paid for. Such corrective **Work** is **Contract Work** and shall not be deemed **Extra Work**.

6.4 Rejected **Work** and materials shall be promptly taken down and removed from the **Site**, which must at all times be kept in a reasonably clean and neat condition.

ARTICLE 7. PROTECTION OF WORK AND OF PERSONS AND PROPERTY; NOTICES AND INDEMNIFICATION

7.1 During the performance of the **Work** and up to the date of **Final Acceptance**, the **Contractor** shall be under an absolute obligation to protect the finished and unfinished **Work** against any damage, loss, injury, theft and/or vandalism and in the event of such damage, loss, injury, theft and/or vandalism, it shall promptly replace and/or repair such **Work** at the **Contractor's** sole cost and expense, as directed by the **Resident Engineer**. The obligation to deliver finished **Work** in strict accordance with the **Contract** prior to **Final Acceptance** shall be absolute and shall not be affected by the **Resident Engineer's** approval of, or failure to prohibit, the **Means and Methods of Construction** used by the **Contractor**.

7.2 During the performance of the **Work** and up to the date of **Final Acceptance**, the **Contractor** shall take all reasonable precautions to protect all persons and the property of the **City** and of others from damage, loss or injury resulting from the **Contractor's**, and/or its **Subcontractors'** operations under this **Contract.** The **Contractor's** obligation to protect shall include the duty to provide, place or replace, and adequately maintain at or about the **Site** suitable and sufficient protection such as lights, barricades, and enclosures.

7.3 The **Contractor** shall comply with the notification requirements set forth below in the event of any loss, damage or injury to **Work**, persons or property, or any accidents arising out of the operations of the **Contractor** and/or its **Subcontractors** under this **Contract**.

7.3.1 The **Contractor** shall make a full and complete report in writing to the **Resident Engineer** within three (3) **Days** after the occurrence.

7.3.2 The **Contractor** shall also send written notice of any such event to all insurance carriers that issued potentially responsive policies (including commercial general liability insurance carriers for events relating to the **Contractor**'s own employees) no later than twenty (20) days after such event and again no later than twenty (20) days after the initiation of any claim and/or action resulting therefrom. Such notice shall contain the following information: the number of the insurance policy, the name of the Named Insured, the date and location of the incident, and the identity of the persons injured or property damaged. For any policy on which the **City** and/or the **Engineer**, **Architect**, or **Project Manager** are Additional Insureds, such notice shall expressly specify that "this notice is being given on behalf of the City of New York as Additional Insured, such other Additional Insureds, as well as the Named Insured."

7.3.2(a) Whenever such notice is sent under a policy on which the **City** is an Additional Insured, the **Contractor** shall provide copies of the notice to the **Comptroller,** the **Commissioner** and the **City** Corporation Counsel. The copy to the **Comptroller** shall be sent to the Insurance Unit, NYC Comptroller's Office, 1 Centre Street – Room 1222, New York, New York, 10007. The copy to the **Commissioner** shall be sent to the address set forth in Schedule A of the General Conditions. The copy to the **City** Corporation Counsel shall be sent to Insurance Claims Specialist, Affirmative Litigation Division, New York City Law Department, 100 Church Street, New York, New York 10007.

7.3.2(b) If the **Contractor** fails to provide any of the foregoing notices to any appropriate insurance carrier(s) in a timely and complete manner, the **Contractor** shall indemnify the **City** for all losses, judgments, settlements, and expenses, including reasonable attorneys' fees, arising from an insurer's disclaimer of coverage citing late notice by or on behalf of the **City**.

7.4 To the fullest extent permitted by law, the **Contractor** shall defend, indemnify, and hold the **City**, its employees, and officials (the "Indemnitees") harmless against any and all claims (including but not limited to claims asserted by any employee of the **Contractor** and/or its **Subcontractors**) and costs and expenses of whatever kind (including but not limited to payment or reimbursement of attorneys' fees and disbursements) allegedly arising out of or in any way related to the operations of the **Contractor** and/or its **Subcontractors** in the performance of this **Contract** or from the **Contractor's** and/or its **Subcontractors'** failure to comply with any of the provisions of this **Contract** or of the **Law**. Such costs and expenses shall include all those incurred in defending the underlying claim and those incurred in connection with the enforcement of this Article 7.4 by way of cross-claim, third-party claim, declaratory action or otherwise. The parties expressly agree that the indemnification obligation hereunder contemplates (1) full indemnity in the event of liability imposed against the Indemnitees without negligence and solely by reason of statute, operation of **Law** or otherwise; and (2) partial indemnity in the event of any actual negligence on the part of the Indemnitees either causing or contributing to the underlying claim (in which case, indemnification will be limited to any liability imposed over and above that percentage attributable to actual fault whether by statute, by operation of **Law**, or otherwise). Where partial indemnity is provided hereunder, all costs and expenses shall be indemnified on a pro rata basis.

7.4.1 Indemnification under Article 7.4 or any other provision of the **Contract** shall operate whether or not **Contractor** or its **Subcontractors** have placed and maintained the insurance specified under Article 22.

7.5 The provisions of this Article 7 shall not be deemed to create any new right of action in favor of third parties against the **Contractor** or the **City**.

CHAPTER III
TIME PROVISIONS

ARTICLE 8. COMMENCEMENT AND PROSECUTION OF THE WORK

8.1 The **Contractor** shall commence the **Work** on the date specified in the **Notice to Proceed** or the **Order to Work**. The time for performance of the **Work** under the **Contract** shall be computed from the date specified in the **Notice to Proceed** or the **Order to Work. TIME BEING OF THE ESSENCE** to the **City**, the **Contractor** shall thereafter prosecute the **Work** diligently, using such **Means and Methods of Construction** as are in accord with Article 4 herein and as will assure its completion not later than the date specified in this Contract, or on the date to which the time for completion may be extended.

ARTICLE 9. PROGRESS SCHEDULES

9.1 To enable the **Work** to be performed in an orderly and expeditious manner, the **Contractor**, within fifteen (15) **Days** after the **Notice to Proceed** or **Order to Work**, unless otherwise directed by the **Engineer**, shall submit to the **Engineer** a proposed progress schedule based on the Critical Path Method in the form of a bar graph or in such other form as specified by the **Engineer**, and monthly cash flow requirements, showing:

9.1.1 The anticipated time of commencement and completion of each of the various operations to be performed under this **Contract**; and

9.1.2 The sequence and interrelation of each of these operations with the others and with those of other related contracts; and

9.1.3 The estimated time required for fabrication or delivery, or both, of all materials and equipment required for the **Work**, including the anticipated time for obtaining required approvals pursuant to Article 10; and

9.1.4 The estimated amount in dollars the **Contractor** will claim on a monthly basis.

9.2 The proposed schedule shall be revised as directed by the **Engineer**, until finally approved by the **Engineer**, and after such approval, subject to the provisions of Article 11, shall be strictly adhered to by the **Contractor**.

9.3 If the **Contractor** shall fail to adhere to the approved progress schedule, or to the schedule as revised pursuant to Article 11, it shall promptly adopt such other or additional **Means and Methods of Construction**, at its sole cost and expense, as will make up for the time lost and will assure completion in accordance with the approved progress schedule. The approval by the **City** of a progress schedule which is shorter than the time allotted under the **Contract** shall not create any liability for the **City** if the approved progress schedule is not met.

9.4 The **Contractor** will not receive any payments until the proposed progress schedule is submitted.

ARTICLE 10. REQUESTS FOR INFORMATION OR APPROVAL

10.1 From time to time as the **Work** progresses and in the sequence indicated by the approved progress schedule, the **Contractor** shall submit to the **Engineer** a specific request in writing for each item of information or approval required by the **Contractor**. These requests shall state the latest date upon which the information or approval is actually required by the **Contractor**, and shall be submitted in a reasonable time in advance thereof to provide the **Engineer** a sufficient time to act upon such submissions, or any necessary re-submissions thereof.

10.2 The **Contractor** shall not have any right to an extension of time on account of delays due to the **Contractor's** failure to submit requests for the required information or the required approval in accordance with the above requirements.

ARTICLE 11. NOTICE OF CONDITIONS CAUSING DELAY AND DOCUMENTATION OF DAMAGES CAUSED BY DELAY

11.1 After the commencement of any condition which is causing or may cause a delay in completion of the **Work**, including conditions for which the **Contractor** may be entitled to an extension of time, the following notifications and submittals are required:

11.1.1 Within seven (7) **Days** after the commencement of such condition, the **Contractor** must notify the **Engineer** in writing of the existence, nature and effect of such condition upon the approved progress schedule and the **Work**, and must state why and in what respects, if any, the condition is causing or may cause a delay.

11.1.2 If the **Contractor** shall claim to be sustaining damages for delay as provided for in this Article 11, within forty-five (45) **Days** from the time such damages are first incurred, and every thirty (30) **Days** thereafter for as long as such damages are being incurred, the **Contractor** shall submit to the **Commissioner** verified written statements of the details and the amounts of such damages, together with documentary evidence of such damages, ("statement of delay damages") as further detailed in Article 11.6. The **Contractor** may submit any of the above statements within such additional time as may be granted by the **Commissioner** in writing upon written request therefor. On failure of the **Contractor** to strictly comply with all of the foregoing provisions, such claims shall be deemed waived and no right to recover on such claims shall exist. Damages that the **Contractor** may claim in any action arising under or by reason of this **Contract** shall not be different from or in excess of the statements made and documentation provided pursuant to this Article 11.

11.1.3 Within 60 days of submission of the final verified statement of claims pursuant to Article 44, the **Commissioner** shall make a determination as to whether a compensable delay has occurred and, if so, the amount of compensation due the **Contractor**. Notwithstanding the above, the **Commissioner** may make a determination as to whether a compensable delay has occurred at any time after the **Contractor's** first submission of a statement of delay damages provided, however, that the amount of compensation due to the **Contractor** will not be determined until the **Commissioner** determines that the **Work** is delayed after the date set for substantial completion.

11.2 Failure of the **Contractor** to strictly comply with the requirements of Article 11.1.1 may, in the discretion of the **Commissioner**, be deemed sufficient cause to deny any extension of time on account of delay arising out of such condition. Failure of the **Contractor** to strictly comply with the requirements of Articles 11.1.1 and 11.1.2 shall be deemed a conclusive waiver by the **Contractor** of any and all claims for damages for delay arising from such condition and no right to recover on such claims shall exist.

11.3 When appropriate and directed by the **Engineer**, the progress schedule shall be revised by the **Contractor** until finally approved by the **Engineer**. The revised progress schedule must be strictly adhered to by the **Contractor**.

11.4 Compensable Delays

11.4.1 The **Contractor** agrees to make claim only for additional costs attributable to delay in the performance of this **Contract** necessarily extending the time for completion of the **Work** or resulting from acceleration directed by the **Commissioner** and required to maintain the **Project** schedule, occasioned solely by any act or omission to act of the **City** listed below. The **Contractor** also agrees that delay from any other cause shall be compensated, if at all, solely by an extension of time to complete the performance of the **Work**.

11.4.1.1 The failure of the **City** to take reasonable measures to coordinate and progress the **Work**, except that the City shall not be responsible for the **Contractor's** obligation to coordinate and progress the **Work** of its **Subcontractors**.

11.4.1.2 Extended delays attributable to the **City** in the review or issuance of change orders, in shop drawing reviews and approvals or as a result of the cumulative impact of multiple change orders, which have a verifiable impact on **Project** costs.

11.4.1.3 The unavailability of the **Site** for an extended period of time that significantly affects the scheduled completion of the **Contract**.

11.4.1.4 The issuance by the **Engineer** of a stop work order relative to a substantial portion of the **Work** for a period exceeding thirty (30) **Days**, that was not brought about through any action or omission of the **Contractor**.

11.4.1.5 Differing site conditions that were neither known nor reasonably ascertainable on a pre-bid inspection of the **Site** or review of the bid documents or other publicly available sources, and that are not ordinarily encountered in the **Project's** geographical area or neighborhood or in the type of **Work** to be performed.

11.4.1.6 Delays caused by the **City's** bad faith or its willful, malicious, or grossly negligent conduct;

11.4.1.7 Delays not contemplated by the parties;

11.4.1.8 Delays so unreasonable that they constitute an intentional abandonment of the **Contract** by the **City**; and

11.4.1.9 Delays resulting from the **City's** breach of a fundamental obligation of the **Contract**.

11.4.2 No claim may be made for any alleged delay in **Substantial Completion** of the **Work** by a date earlier than the date of **Substantial Completion** provided for in Schedule A unless there is a provision in the **Contract** providing for additional compensation for early completion. No claim may be made for any alleged delay in **Substantial Completion** of the **Work** if the work is substantially completed by the date of **Substantial Completion** provided for in Schedule A unless acceleration has been directed by the **Commissioner** to meet the date of **Substantial Completion** set forth in Schedule A.

11.4.3 The provisions of this Article 11 apply only to claims for additional costs attributable to delay and do not preclude determinations by the **Commissioner** allowing reimbursements for additional costs for **Extra Work** pursuant to Articles 25 and 26 of this **Contract**. To the extent that any cost attributable to delay is reimbursed as part of a change order, no additional claim for compensation under this Article 11 shall be allowed.

11.5 Non-Compensable Delays. The **Contractor** agrees to make no claim for, and is deemed to have included in its bid prices for the various items of the **Contract**, the extra/additional costs attributable to any delays caused by or attributable to the items set forth below. For such items, the **Contractor** shall be compensated, if at all, solely by an extension of time to complete the performance of the **Work**, in accordance with the provisions of Article 13. Such extensions of time will be granted, if at all, pursuant to the grounds set forth in Article 13.3.

11.5.1 The acts or omissions of any third parties, including but not limited to **Other Contractors**, public/ governmental bodies (other than **City Agencies**), utilities or private enterprises, who are disclosed in the **Contract Documents** or are ordinarily encountered or generally recognized as related to the **Work**;

11.5.2 Any situation which was within the contemplation of the parties at the time of entering into the **Contract**, including any delay indicated or disclosed in the **Contract Documents** or generally recognized as related to the nature of the **Work**, and/or the existence of any facility or appurtenance owned, operated or maintained by any third party, as indicated or disclosed in the **Contract Documents** or ordinarily encountered or generally recognized as related to the nature of the **Work**;

11.5.3 Restraining orders, injunctions or judgments issued by a court which were caused by a Contractor's submission, action or inaction or by a Contractor's **Means and Methods of**

Construction, or by third parties, unless such order, injunction or judgment was the result of an action or omission by the **City**;

11.5.4 Any labor boycott, strike, picketing, lockout or similar situation;

11.5.5 Any shortages of supplies or materials, or unavailability of equipment, required by the **Contract Work**;

11.5.6 Climatic conditions, storms, floods, droughts, tidal waves, fires, hurricanes, earthquakes, landslides or other catastrophes or acts of God, or acts of war or of the public enemy or terrorist acts, including the **City's** reasonable responses thereto; and

11.5.7 **Extra Work** which does not significantly affect the overall completion of the **Contract**, reasonable delays in the review or issuance of change orders or field orders and/or in shop drawing reviews or approvals.

11.6 Required Content of Submission of Statement of Delay Damages

11.6.1 In the verified written statement of delay damages required by Article 11.1.2, the following information shall be provided by the **Contractor**:

11.6.1.1 For each delay, the start and end dates of the claimed periods of delay and, in addition, a description of the operations that were delayed, an explanation of how they were delayed, and the reasons for the delay, including identifying the applicable act or omission of the City listed in Article 11.4.

11.6.1.2 A detailed factual statement of the claim providing all necessary dates, locations and items of **Work** affected by the claim.

11.6.1.3 The amount of additional compensation sought and a breakdown of that amount into categories as described in Article 26.2, subject to the limitations set forth in Article 11.7.

11.6.1.4 Any additional information requested by the **Commissioner**.

11.7 Recoverable Costs

11.7.1 Delay damages may be recoverable for the following costs actually and necessarily incurred in the performance of the **Work**:

11.7.1.1 Direct labor, including payroll taxes (subject to statutory wage caps) and supplemental benefits, based on time and materials records;

11.7.1.2 Necessary materials (including transportation to the **Site**), based on time and material records;

11.7.1.3 Reasonable rental value of necessary plant and equipment other than small tools, plus fuel/energy costs according to the applicable formula set forth in Articles 26.2.4 and/or 26.2.8, based on time and material records;

11.7.1.4 Insurance and bond costs;

11.7.1.5 Extended field office costs;

11.7.1.6 Extended **Site** overhead; and

11.7.1.7 Extended home office overhead.

11.7.2 Recoverable Subcontractor Costs. When the **Work** is performed by a **Subcontractor**, the **Contractor** may be paid the actual and necessary costs of such subcontracted **Work** as outlined above in Articles 11.7.1.1 through 11.7.1.6, and an

additional overhead of five (5%) percent of the costs outlined in Articles 11.7.1.1 through 11.7.1.3.

11.7.3 Non-Recoverable Costs. The parties agree that the **City** will have no liability for the following items and the **Contractor** agrees it shall make no claim for the following items:

11.7.3.1 Profit, or loss of anticipated or unanticipated profit;

11.7.3.2 Consequential damages, including but not limited to interest on monies in dispute, including interest which is paid on such monies, loss of bonding capacity, bidding opportunities, or interest in investment, or any resulting insolvency;

11.7.3.3 Indirect costs or expenses of any nature;

11.7.3.4 Direct or indirect costs attributable to performance of **Work** where the **Contractor**, because of situations or conditions within its control, has not progressed the **Work** in a satisfactory manner; and

11.7.3.5 Attorneys' fees and dispute and claims preparation expenses.

11.8 Determinations under this Article 11 are not subject to the jurisdiction of the Contract Dispute Resolution Board pursuant to the dispute resolution process set forth in Article 27.

11.9 If the parties agree, pursuant to Article 11.1.3 above, that a compensable delay has occurred and agree on the amount of compensation, payment may be made pursuant to a written change order. Payment pursuant to such change order is subject to pre-audit by the **Engineering Audit Officer,** and may be post-audited by the **Comptroller** and/or the **Agency**.

ARTICLE 12. COORDINATION WITH OTHER CONTRACTORS

12.1 During the progress of the **Work**, **Other Contractors** may be engaged in performing other work or may be awarded other contracts for additional work on this **Project**. In that event, the **Contractor** shall coordinate the **Work** to be done hereunder with the work of such **Other Contractors** and the **Contractor** shall fully cooperate with such **Other Contractors** and carefully fit its own **Work** to that provided under other contracts as may be directed by the **Engineer**. The **Contractor** shall not commit or permit any act which will interfere with the performance of work by any **Other Contractors**.

12.2 If the **Engineer** determines that the **Contractor** is failing to coordinate its **Work** with the work of **Other Contractors** as the **Engineer** has directed, then the **Commissioner** shall have the right to withhold any payments otherwise due hereunder until the **Contractor** completely complies with the **Engineer's** directions.

12.3 The **Contractor** shall notify the **Engineer** in writing if any **Other Contractor** on this **Project** is failing to coordinate its work with the **Work** of this **Contract**. If the **Engineer** finds such charges to be true, the **Engineer** shall promptly issue such directions to the **Other Contractor** with respect thereto as the situation may require. The **City** shall not, however, be liable for any damages suffered by any **Other Contractor's** failure to coordinate its work with the **Work** of this **Contract** or by reason of the **Other Contractor's** failure to promptly comply with the directions so issued by the **Engineer**, or by reason of any **Other Contractor's** default in performance, it being understood that the **City** does not guarantee the responsibility or continued efficiency of any contractor. The **Contractor** agrees to make no claim against

the **City** for any damages relating to or arising out of any directions issued by the **Engineer** pursuant to this Article 12 (including but not limited to the failure of any **Other Contractor** to comply or promptly comply with such directions), or the failure of the **Engineer** to issue any directions, or the failure of any **Other Contractor** to coordinate its work, or the default in performance of any **Other Contractor**.

12.4 The **Contractor** shall indemnify and hold the **City** harmless from any and all claims or judgments for damages and from costs and expenses to which the **City** may be subjected or which it may suffer or incur by reason of the **Contractor's** failure to comply with the **Engineer's** directions promptly; and the **Comptroller** shall have the right to exercise the powers reserved in Article 23 with respect to any claims which may be made for damages due to the **Contractor's** failure to comply with the **Engineer's** directions promptly. Insofar as the facts and **Law** relating to any claim would preclude the **City** from being completely indemnified by the **Contractor**, the **City** shall be partially indemnified by the **Contractor** to the fullest extent provided by **Law**.

12.5 Should the **Contractor** sustain any damage through any act or omission of any **Other Contractor** having a contract with the **City** for the performance of work upon the **Site** or of work which may be necessary to be performed for the proper prosecution of the **Work** to be performed hereunder, or through any act or omission of a subcontractor of such **Other Contractor**, the **Contractor** shall have no claim against the **City** for such damage, but shall have a right to recover such damage from the **Other Contractor** under the provision similar to the following provisions which apply to this **Contract** and have been or will be inserted in the contracts with such **Other Contractors**:

> 12.5.1 Should any **Other Contractor** having or who shall hereafter have a contract with the **City** for the performance of work upon the **Site** sustain any damage through any act or omission of the **Contractor** hereunder or through any act or omission of any **Subcontractor** of the **Contractor**, the **Contractor** agrees to reimburse such **Other Contractor** for all such damages and to defend at its own expense any action based upon such claim and if any judgment or claim (even if the allegations of the action are without merit) against the **City** shall be allowed the **Contractor** shall pay or satisfy such judgment or claim and pay all costs and expenses in connection therewith and agrees to indemnify and hold the **City** harmless from all such claims. Insofar as the facts and **Law** relating to any claim would preclude the **City** from being completely indemnified by the **Contractor**, the **City** shall be partially indemnified by the **Contractor** to the fullest extent provided by **Law**.

12.6 The **City's** right to indemnification hereunder shall in no way be diminished, waived or discharged by its recourse to assessment of liquidated damages as provided in Article 15, or by the exercise of any other remedy provided for by **Contract** or by **Law**.

ARTICLE 13. EXTENSION OF TIME FOR PERFORMANCE

13.1 If performance by the **Contractor** is delayed for a reason set forth in Article 13.3, the **Contractor** may be allowed a reasonable extension of time in conformance with this Article 13 and the **PPB** Rules.

13.2 Any extension of time may be granted only by the **ACCO** or by the Board for the Extension of Time (hereafter "Board") (as set forth below) upon written application by the **Contractor**.

13.3 Grounds for Extension: If such application is made, the **Contractor** shall be entitled to an extension of time for delay in completion of the **Work** caused solely:

> 13.3.1 By the acts or omissions of the **City**, its officials, agents or employees; or

13.3.2 By the act or omissions of **Other Contractors** on this **Project**; or

13.3.3 By supervening conditions entirely beyond the control of either party hereto (such as, but not limited to, acts of God or the public enemy, excessive inclement weather, war or other national emergency making performance temporarily impossible or illegal, or strikes or labor disputes not brought about by any act or omission of the **Contractor**).

13.3.4 The **Contractor** shall, however, be entitled to an extension of time for such causes only for the number of **Days** of delay which the **ACCO** or the Board may determine to be due solely to such causes, and then only if the **Contractor** shall have strictly complied with all of the requirements of Articles 9 and 10.

13.4 The **Contractor** shall not be entitled to receive a separate extension of time for each of several causes of delay operating concurrently, but, if at all, only for the actual period of delay in completion of the **Work** as determined by the **ACCO** or the Board, irrespective of the number of causes contributing to produce such delay. If one of several causes of delay operating concurrently results from any act, fault or omission of the **Contractor** or of its **Subcontractors** or **Materialmen**, and would of itself (irrespective of the concurrent causes) have delayed the **Work**, no extension of time will be allowed for the period of delay resulting from such act, fault or omission.

13.5 The determination made by the **ACCO** or the Board on an application for an extension of time shall be binding and conclusive on the **Contractor**.

13.6 The **ACCO** or the Board acting entirely within their discretion may grant an application for an extension of time for causes of delay other than those herein referred.

13.7 Permitting the **Contractor** to continue with the **Work** after the time fixed for its completion has expired, or after the time to which such completion may have been extended has expired, or the making of any payment to the **Contractor** after such time, shall in no way operate as a waiver on the part of the **City** of any of its rights under this **Contract**.

13.8 Application for Extension of Time:

13.8.1 Before the **Contractor's** time extension request will be considered, the **Contractor** shall notify the **ACCO** of the condition which allegedly has caused or is causing the delay, and shall submit a written application to the **ACCO** identifying:

13.8.1(a) The **Contractor**; the registration number; and **Project** description;

13.8.1(b) Liquidated damage assessment rate, as specified in the **Contract**;

13.8.1(c) Original total bid price;

13.8.1(d) The original **Contract** start date and completion date;

13.8.1(e) Any previous time extensions granted (number and duration); and

13.8.1(f) The extension of time requested.

13.8.2 In addition, the application for extension of time shall set forth in detail:

13.8.2(a) The nature of each alleged cause of delay in completing the **Work**;

13.8.2(b) The date upon which each such cause of delay began and ended and the number of **Days** attributable to each such cause;

13.8.2(c) A statement that the **Contractor** waives all claims except for those delineated in the application, and the particulars of any claims which the **Contractor** does not agree to waive. For time extensions for **Substantial Completion** and final completion payments, the application shall include a detailed statement of the dollar amounts of each element of claim item reserved; and

13.8.2(d) A statement indicating the **Contractor's** understanding that the time extension is granted only for purposes of permitting continuation of **Contract** performance and payment for **Work** performed and that the **City** retains its right to conduct an investigation and assess liquidated damages as appropriate in the future.

13.9 Analysis and Approval of Time Extensions:

13.9.1 For time extensions for partial payments, a written determination shall be made by the **ACCO** who may, for good and sufficient cause, extend the time for the performance of the **Contract** as follows:

13.9.1(a) If the **Work** is to be completed within six (6) months, the time for performance may be extended for sixty (60) **Days**;

13.9.1(b) If the **Work** is to be completed within less than one (1) year but more than six (6) months, an extension of ninety (90) **Days** may be granted;

13.9.1(c) If the **Contract** period exceeds one (1) year, besides the extension granted in Article 13.9.1(b), an additional thirty (30) **Days** may be granted for each multiple of six (6) months involved beyond the one (1) year period; or

13.9.1(d) If exceptional circumstances exist, the **ACCO** may extend the time for performance beyond the extensions in Articles 13.9.1(a), 13.9.1(b), and 13.9.1(c). In that event, the **ACCO** shall file with the Mayor's Office of Contract Services a written explanation of the exceptional circumstances.

13.9.2 For extensions of time for **Substantial Completion** and final completion payments, the **Engineer**, in consultation with the **ACCO**, shall prepare a written analysis of the delay (including a preliminary determination of the causes of delay, the beginning and end dates for each such cause of delay, and whether the delays are excusable under the terms of this **Contract**). The report shall be subject to review by and approval of the Board, which shall have authority to question its analysis and determinations and request additional facts or documentation. The report as reviewed and made final by the Board shall be made a part of the **Agency** contract file. Neither the report itself nor anything contained therein shall operate as a waiver or release of any claim the **City** may have against the **Contractor** for either actual or liquidated damages.

13.9.3 Approval Mechanism for Time Extensions for **Substantial Completion** or Final Completion Payments: An extension shall be granted only with the approval of the Board which is comprised of the **ACCO** of the **Agency**, the **City** Corporation Counsel, and the **Comptroller**, or their authorized representatives.

13.9.4 Neither the granting of any application for an extension of time to the **Contractor** or any **Other Contractor** on this **Project** nor the papers, records or reports related to any application for or grant of an extension of time or determination related thereto shall be referred to or offered in evidence by the **Contractor** or its attorneys in any action or proceeding.

13.10 No Damage for Delay: The **Contractor** agrees to make no claim for damages for delay in the performance of this **Contract** occasioned by any act or omission to act of the **City** or any of its representatives, except as provided for in Article 11.

ARTICLE 14. COMPLETION AND FINAL ACCEPTANCE OF THE WORK

14.1 Date for **Substantial Completion**: The **Contractor** shall substantially complete the **Work** within the time fixed in Schedule A of the General Conditions, or within the time to which such **Substantial Completion** may be extended.

14.2 Determining the Date of **Substantial Completion**: The **Work** will be deemed to be substantially complete when the two conditions set forth below have been met.

14.2.1 Inspection: The **Engineer** has inspected the **Work** and has made a written determination that it is substantially complete.

14.2.2 Approval of **Final Approved Punch List** and Date for **Final Acceptance**: Following inspection of the **Work**, the **Engineer** shall furnish the **Contractor** with a final punch list, specifying all items of **Work** to be completed and proposing dates for the completion of each specified item of **Work**. The **Contractor** shall then submit in writing to the **Engineer** within ten (10) **Days** of the **Engineer** furnishing the final punch list either acceptance of the dates or proposed alternative dates for the completion of each specified item of **Work**. If the **Contractor** proposes alternative dates, then, within a reasonable time after receipt, the **Engineer**, in a written notification to the **Contractor**, shall approve the **Contractor's** completion dates or, if they are unable to agree, the Engineer shall establish dates for the completion of each item of **Work**. If the **Contractor** neither accepts the dates nor proposes alternative dates within ten (10) **Days**, the schedule proposed by the **Engineer** shall be deemed accepted. The latest completion date specified shall be the date for **Final Acceptance** of the **Work**.

14.3 Date of **Substantial Completion**. The date of approval of the **Final Approved Punch List**, shall be the date of **Substantial Completion**. The date of approval of the **Final Approved Punch List** shall be either (a) if the **Contractor** approves the final punch list and proposed dates for completion furnished by the **Engineer**, the date of the **Contractor**'s approval; or (b) if the **Contractor** neither accepts the dates nor proposes alternative dates, ten (10) **Days** after the **Engineer** furnishes the **Contractor** with a final punch list and proposed dates for completion; or (c) if the **Contractor** proposes alternative dates, the date that the **Engineer** sends written notification to the **Contractor** either approving the **Contractor**'s proposed alternative dates or establishing dates for the completion for each item of **Work**.

14.4 Determining the Date of **Final Acceptance**: The **Work** will be accepted as final and complete as of the date of the **Engineer's** inspection if, upon such inspection, the **Engineer** finds that all items on the **Final Approved Punch List** are complete and no further **Work** remains to be done. The **Commissioner** will then issue a written determination of **Final Acceptance**.

14.5 Request for Inspection: Inspection of the **Work** by the **Engineer** for the purpose of **Substantial Completion** or **Final Acceptance** shall be made within ten (10) **Days** after receipt of the **Contractor's** written request therefor.

14.6 Request for Re-inspection: If upon inspection for the purpose of **Substantial Completion** or **Final Acceptance**, the **Engineer** determines that there are items of **Work** still to be performed, the **Contractor** shall promptly perform them and then request a re-inspection. If upon re-inspection, the **Engineer** determines that the **Work** is substantially complete or finally accepted, the date of such re-inspection shall be the date of **Substantial Completion** or **Final Acceptance**. Re-inspection by the **Engineer** shall be made within ten (10) **Days** after receipt of the **Contractor's** written request therefor.

14.7 Initiation of Inspection by the **Engineer**: If the **Contractor** does not request inspection or re-inspection of the **Work** for the purpose of **Substantial Completion** or **Final Acceptance**, the **Engineer** may initiate such inspection or re-inspection.

ARTICLE 15. LIQUIDATED DAMAGES

15.1 In the event the **Contractor** fails to substantially complete the **Work** within the time fixed for such **Substantial Completion** in Schedule A of the General Conditions, plus authorized time extensions, or if the **Contractor**, in the sole determination of the **Commissioner**, has abandoned the **Work**, the **Contractor** shall pay to the **City** the sum fixed in Schedule A of the General Conditions, for each and every **Day** that the time consumed in substantially completing the **Work** exceeds the time allowed therefor; which said sum, in view of the difficulty of accurately ascertaining the loss which the **City** will suffer by reason of delay in the **Substantial Completion** of the **Work** hereunder, is hereby fixed and agreed as the liquidated damages that the **City** will suffer by reason of such delay, and not as a penalty. This Article 15 shall also apply to the **Contractor** whether or not the **Contractor** is defaulted pursuant to Chapter X of this **Contract**. Neither the failure to assess liquidated damages nor the granting of any time extension shall operate as a waiver or release of any claim the **City** may have against the **Contractor** for either actual or liquidated damages.

15.2 Liquidated damages received hereunder are not intended to be nor shall they be treated as either a partial or full waiver or discharge of the **City's** right to indemnification, or the **Contractor's** obligation to indemnify the **City**, or to any other remedy provided for in this **Contract** or by **Law**.

15.3 The **Commissioner** may deduct and retain out of the monies which may become due hereunder, the amount of any such liquidated damages; and in case the amount which may become due hereunder shall be less than the amount of liquidated damages suffered by the **City**, the **Contractor** shall be liable to pay the difference.

ARTICLE 16. OCCUPATION OR USE PRIOR TO COMPLETION

16.1 Unless otherwise provided for in the **Specifications**, the **Commissioner** may take over, use, occupy or operate any part of the **Work** at any time prior to **Final Acceptance**, upon written notification to the **Contractor**. The **Engineer** shall inspect the part of the **Work** to be taken over, used, occupied, or operated, and will furnish the **Contractor** with a written statement of the **Work**, if any, which remains to be performed on such part. The **Contractor** shall not object to, nor interfere with, the **Commissioner's** decision to exercise the rights granted by Article 16. In the event the **Commissioner** takes over, uses, occupies, or operates any part of the **Work:**

16.1.1 the **Engineer** shall issue a written determination of **Substantial Completion** with respect to such part of the **Work**;

16.1.2 the **Contractor** shall be relieved of its absolute obligation to protect such part of the unfinished **Work** in accordance with Article 7;

16.1.3 the **Contractor's** guarantee on such part of the **Work** shall begin on the date of such use by the **City**; and;

16.1.4 the **Contractor** shall be entitled to a return of so much of the amount retained in accordance with Article 21 as it relates to such part of the **Work**, except so much thereof as may be retained under Articles 24 and 44.

CHAPTER IV
SUBCONTRACTS AND ASSIGNMENTS

ARTICLE 17. SUBCONTRACTS

17.1 The **Contractor** shall not make subcontracts totaling an amount more than the percentage of the total **Contract** price fixed in Schedule A of the General Conditions, without prior written permission from the **Commissioner**. All subcontracts made by the **Contractor** shall be in writing. No **Work** may be performed by a **Subcontractor** prior to the **Contractor** entering into a written subcontract with the **Subcontractor** and complying with the provisions of this Article 17.

17.2 Before making any subcontracts, the **Contractor** shall submit a written statement to the **Commissioner** giving the name and address of the proposed **Subcontractor**; the portion of the **Work** and materials which it is to perform and furnish; the cost of the subcontract; the VENDEX questionnaire if required; the proposed subcontract if requested by the **Commissioner**; and any other information tending to prove that the proposed **Subcontractor** has the necessary facilities, skill, integrity, past experience, and financial resources to perform the **Work** in accordance with the terms and conditions of this **Contract**.

17.3 In addition to the requirements in Article 17.2, **Contractor** is required to list the **Subcontractor** in the web based Subcontractor Reporting System through the City's Payee Information Portal (PIP), available at www.nyc.gov/pip.[1] For each **Subcontractor** listed, **Contractor** is required to provide the following information: maximum contract value, description of **Subcontractor's** Work, start and end date of the subcontract and identification of the **Subcontractor**'s industry. Thereafter, **Contractor** will be required to report in the system the payments made to each **Subcontractor** within 30 days of making the payment. If any of the required information changes throughout the Term of the **Contract, Contractor** will be required to revise the information in the system.

Failure of the **Contractor** to list a **Subcontractor** and/or to report **Subcontractor** payments in a timely fashion may result in the **Commissioner** declaring the **Contractor** in default of the **Contract** and will subject **Contractor** to liquidated damages in the amount of $100 per day for each day that the **Contractor** fails to identify a **Subcontractor** along with the required information about the **Subcontractor** and/or fails to report payments to a **Subcontractor**, beyond the time frames set forth herein or in the notice from the **City**. Article 15 shall govern the issue of liquidated damages.

[1] In order to use the new system, a PIP account will be required. Detailed instructions on creating a PIP account and using the new system are also available at www.nyc.gov/pip. Additional assistance with PIP may be obtained by emailing the Financial Information Services Agency Help Desk at pip@fisa.nyc.gov.

17.4 If an approved **Subcontractor** elects to subcontract any portion of its subcontract, the proposed sub-subcontract shall be submitted in the same manner as directed above.

17.5 The **Commissioner** will notify the **Contractor** in writing whether the proposed **Subcontractor** is approved. If the proposed **Subcontractor** is not approved, the **Contractor** may submit another proposed **Subcontractor** unless the **Contractor** decides to do the **Work**. No **Subcontractor** shall be permitted to enter or perform any work on the **Site** unless approved.

17.6 Before entering into any subcontract hereunder, the **Contractor** shall provide the proposed **Subcontractor** with a complete copy of this document and inform the proposed **Subcontractor** fully and completely of all provisions and requirements of this **Contract** relating either directly or indirectly to the **Work** to be performed and the materials to be furnished under such subcontract, and every such **Subcontractor** shall expressly stipulate that all labor performed and materials furnished by the **Subcontractor** shall strictly comply with the requirements of this **Contract**.

17.7 Documents given to a prospective **Subcontractor** for the purpose of soliciting the **Subcontractor's** bid shall include either a copy of the bid cover or a separate information sheet setting forth the **Project** name, the **Contract** number (if available), the **Agency** (as noted in Article 2.1.6), and the **Project's** location.

17.8 The **Commissioner's** approval of a **Subcontractor** shall not relieve the **Contractor** of any of its responsibilities, duties, and liabilities hereunder. The **Contractor** shall be solely responsible to the **City** for the acts or defaults of its **Subcontractor** and of such **Subcontractor's** officers, agents, and employees, each of whom shall, for this purpose, be deemed to be the agent or employee of the **Contractor** to the extent of its subcontract.

17.9 If the **Subcontractor** fails to maintain the necessary facilities, skill, integrity, past experience, and financial resources (other than due to the **Contractor's** failure to make payments where required) to perform the **Work** in accordance with the terms and conditions of this **Contract**, the **Contractor** shall promptly notify the **Commissioner** and replace such **Subcontractor** with a newly approved **Subcontractor** in accordance with this Article 17.

17.10 The **Contractor** shall be responsible for ensuring that all **Subcontractors** performing **Work** at the **Site** maintain all insurance required by **Law**.

17.11 The **Contractor** shall promptly, upon request, file with the **Engineer** a conformed copy of the subcontract and its cost. The subcontract shall provide the following:

17.11.1 Payment to **Subcontractors**: The agreement between the **Contractor** and its **Subcontractor** shall contain the same terms and conditions as to method of payment for **Work**, labor, and materials, and as to retained percentages, as are contained in this **Contract**.

17.11.2 Prevailing Rate of Wages: The agreement between the **Contractor** and its **Subcontractor** shall include the prevailing wage rates and supplemental benefits to be paid in accordance with Labor Law Section 220.

17.11.3 Section 6-123 of the Administrative Code: Pursuant to the requirements of Section 6-123 of the Administrative Code, every agreement between the **Contractor** and a **Subcontractor** in excess of fifty thousand ($50,000) dollars shall include a provision that the **Subcontractor** shall not engage in any unlawful discriminatory practice as defined in Title VIII of the Administrative Code (Section 8-101 *et seq.*).

17.11.4 All requirements required pursuant to federal and/or state grant agreement(s), if applicable to the **Work**.

17.12 The **Commissioner** may deduct from the amounts certified under this **Contract** to be due to the **Contractor**, the sum or sums due and owing from the **Contractor** to the **Subcontractors** according to the terms of the said subcontracts, and in case of dispute between the **Contractor** and its **Subcontractor**, or **Subcontractors**, as to the amount due and owing, the **Commissioner** may deduct and withhold from the amounts certified under this **Contract** to be due to the **Contractor** such sum or sums as may be claimed by such **Subcontractor**, or **Subcontractors**, in a sworn affidavit, to be due and owing until such time as such claim or claims shall have been finally resolved.

17.13 On contracts where performance bonds and payment bonds are executed, the **Contractor** shall include on each requisition for payment the following data: **Subcontractor's** name, value of the subcontract, total amount previously paid to **Subcontractor** for **Work** previously requisitioned, and the amount, including retainage, to be paid to the **Subcontractor** for **Work** included in the requisition.

17.14 On **Contracts** where performance bonds and payment bonds are not executed, the **Contractor** shall include with each requisition for payment submitted hereunder, a signed statement from each and every **Subcontractor** and/or **Materialman** for whom payment is requested in such requisition. Such signed statement shall be on the letterhead of the **Subcontractor** and/or **Materialman** for whom payment is requested and shall (i) verify that such **Subcontractor** and/or **Materialman** has been paid in full for all **Work** performed and/or material supplied to date, exclusive of any amount retained and any amount included on the current requisition, and (ii) state the total amount of retainage to date, exclusive of any amount retained on the current requisition.

ARTICLE 18. ASSIGNMENTS

18.1 The **Contractor** shall not assign, transfer, convey or otherwise dispose of this **Contract**, or the right to execute it, or the right, title or interest in or to it or any part thereof, or assign, by power of attorney or otherwise any of the monies due or to become due under this **Contract**, unless the previous written consent of the **Commissioner** shall first be obtained thereto, and the giving of any such consent to a particular assignment shall not dispense with the necessity of such consent to any further or other assignments.

18.2 Such assignment, transfer, conveyance or other disposition of this **Contract** shall not be valid until filed in the office of the **Commissioner** and the **Comptroller**, with the written consent of the **Commissioner** endorsed thereon or attached thereto.

18.3 Failure to obtain the previous written consent of the **Commissioner** to such an assignment, transfer, conveyance or other disposition, may result in the revocation and annulment of this **Contract**. The **City** shall thereupon be relieved and discharged from any further liability to the **Contractor**, its assignees, transferees or sublessees, who shall forfeit and lose all monies therefor earned under the **Contract**, except so much as may be required to pay the **Contractor's** employees.

18.4 The provisions of this clause shall not hinder, prevent, or affect an assignment by the **Contractor** for the benefit of its creditors made pursuant to the **Laws** of the State of New York.

18.5 This **Contract** may be assigned by the **City** to any corporation, agency or instrumentality having authority to accept such assignment.

CHAPTER V
CONTRACTOR'S SECURITY AND GUARANTEE

ARTICLE 19. SECURITY DEPOSIT

19.1 If performance and payment bonds are required, the **City** shall retain the bid security to ensure that the successful bidder executes the **Contract** and furnishes the required payment and performance security within ten (10) **Days** after notice of the award of the **Contract**. If the successful bidder fails to execute the **Contract** and furnish the required payment and performance security, the **City** shall retain such bid security as set forth in the Information for Bidders. If the successful bidder executes the **Contract** and furnishes the required payment and performance security, the **City** shall return the bid security within a reasonable time after the furnishing of such bonds and execution of the **Contract** by the **City**.

19.2 If performance and payment bonds are not required, the bid security shall be retained by the **City** as security for the **Contractor**'s faithful performance of the **Contract**. If partial payments are provided, the bid security will be returned to the **Contractor** after the sum retained under Article 21 equals the amount of the bid security, subject to other provisions of this **Contract**. If partial payments are not provided, the bid security will be released when final payment is certified by the **City** for payment.

19.3 If the **Contractor** is declared in default under Article 48 prior to the return of the deposit, or if any claim is made such as referred to in Article 23, the amount of such deposit, or so much thereof as the **Comptroller** may deem necessary, may be retained and then applied by the **Comptroller**:

19.3.1 To compensate the **City** for any expense, loss or damage suffered or incurred by reason of or resulting from such default, including the cost of re-letting and liquidated damages; or

19.3.2 To indemnify the **City** against any and all claims.

ARTICLE 20. PAYMENT GUARANTEE

20.1 On **Contracts** where one hundred (100%) percent performance bonds and payment bonds are executed, this Article 20 does not apply.

20.2 In the event the terms of this **Contract** do not require the **Contractor** to provide a payment bond or where the **Contract** does not requite a payment bond for one hundred (100%) percent of the **Contract** price, the **City** shall, in accordance with the terms of this Article 20, guarantee payment of all lawful claims for:

20.2.1 Wages and compensation for labor performed and/or services rendered; and

20.2.2 Materials, equipment, and supplies provided, whether incorporated into the **Work** or not, when demands have been filed with the **City** as provided hereinafter by any person, firm, or corporation which furnished labor, material, equipment, supplies, or any combination thereof, in connection with the **Work** performed hereunder (hereinafter referred to as the "beneficiary") at the direction of the **City** or the **Contractor**.

20.3 The provisions of Article 20.2 are subject to the following limitations and conditions:

20.3.1 If the **Contractor** provides a payment bond for a value that is less than one hundred (100%) percent of the value of the **Contract Work**, the payment bond provided by the **Contractor** shall be primary (and non-contributing) to the payment guarantee provided under this Article 20.

20.3.2 The guarantee is made for the benefit of all beneficiaries as defined in Article 20.2 provided that those beneficiaries strictly adhere to the terms and conditions of Article 20.3.4 and 20.3.5.

20.3.3 Nothing in this Article 20 shall prevent a beneficiary providing labor, services or material for the **Work** from suing the **Contractor** for any amounts due and owing the beneficiary by the **Contractor**.

20.3.4 Every person who has furnished labor or material, to the **Contractor** or to a **Subcontractor** of the **Contractor**, in the prosecution of the **Work** and who has not been paid in full therefor before the expiration of a period of ninety (90) **Days** after the date on which the last of the labor was performed or material was furnished by him/her for which the claim is made, shall have the right to sue on this payment guarantee in his/her own name for the amount, or the balance thereof, unpaid at the time of commencement of the action; provided, however, that a person having a direct contractual relationship with a **Subcontractor** of the **Contractor** but no contractual relationship express or implied with the **Contractor** shall not have a right of action upon the guarantee unless he/she shall have given written notice to the **Contractor** within one hundred twenty (120) **Days** from the date on which the last of the labor was performed or the last of the material was furnished, for which his/her claim is made, stating with substantial accuracy the amount claimed and the name of the party to whom the material was furnished or for whom the labor was performed. The notice shall be served by delivering the same personally to the **Contractor** or by mailing the same by registered mail, postage prepaid, in an envelope addressed to the **Contractor** at any place where it maintains an office or conducts its business; provided, however, that where such notice is actually received by the **Contractor** by other means, such notice shall be deemed sufficient.

20.3.5 Except as provided in Labor Law Section 220-g, no action on this payment guarantee shall be commenced after the expiration of the one-year limitations period set forth in Section 137(4)(b) of the State Finance Law.

20.3.6 The **Contractor** shall promptly forward to the **City** any notice or demand received pursuant to Article 20.3.4. The **Contractor** shall inform the **City** of any defenses to the notice or demand and shall forward to the **City** any documents the **City** requests concerning the notice or demand.

20.3.7 All demands made against the **City** by a beneficiary of this payment guarantee shall be presented to the **Engineer** along with all written documentation concerning the demand which the **Engineer** deems reasonably appropriate or necessary, which may include, but shall not be limited to: the subcontract; any invoices presented to the **Contractor** for payment; the notarized statement of the beneficiary that the demand is due and payable, that a request for payment has been made of the **Contractor** and that the demand has not been paid by the **Contractor** within the time allowed for such payment by the subcontract; and copies of any correspondence between the beneficiary and the **Contractor** concerning such demand. The **City** shall notify the **Contractor** that a demand has been made. The **Contractor** shall inform the **City** of any defenses to the demand and shall forward to the **City** any documents the **City** requests concerning the demand.

20.3.8 The **City** shall make payment only if, after considering all defenses presented by the **Contractor**, it determines that the payment is due and owing to the beneficiary making the demand.

20.3.9 No beneficiary shall be entitled to interest from the **City**, or to any other costs, including, but not limited to, attorneys' fees, except to the extent required by State Finance Law Section 137.

20.4 Upon the receipt by the **City** of a demand pursuant to this Article 20, the **City** may withhold from any payment otherwise due and owing to the **Contractor** under this **Contract** an amount sufficient to satisfy the demand.

20.4.1 In the event the **City** determines that the demand is valid, the **City** shall notify the **Contractor** of such determination and the amount thereof and direct the **Contractor** to immediately pay such amount to the beneficiary. In the event the **Contractor**, within seven (7) **Days** of receipt of such notification from the **City**, fails to pay the beneficiary, such failure shall constitute an automatic and irrevocable assignment of payment by the **Contractor** to the beneficiary for the amount of the demand determined by the **City** to be valid. The **Contractor**, without further notification or other process, hereby gives its unconditional consent to such assignment of payment to the beneficiary and authorizes the **City**, on its behalf, to take all necessary actions to implement such assignment of payment, including without limitation the execution of any instrument or documentation necessary to effectuate such assignment.

20.4.2In the event that the amount otherwise due and owing to the **Contractor** by the **City** is insufficient to satisfy such demand, the **City** may, at its option, require payment from the **Contractor** of an amount sufficient to cover such demand and exercise any other right to require or recover payment which the **City** may have under **Law** or **Contract**.

20.4.3 In the event the **City** determines that the demand is invalid, any amount withheld pending the **City**'s review of such demand shall be paid to the **Contractor**; provided, however, no lien has been filed. In the event a claim or an action has been filed, the terms and conditions set forth in Article 23 shall apply. In the event a lien has been filed, the parties will be governed by the provisions of the Lien Law of the State of New York.

20.5 The provisions of this Article 20 shall not prevent the **City** and the **Contractor** from resolving disputes in accordance with the **PPB** Rules, where applicable.

20.6 In the event the **City** determines that the beneficiary is entitled to payment pursuant to this Article 20, such determination and any defenses and counterclaims raised by the **Contractor** shall be taken into account in evaluating the **Contractor's** performance.

20.7 Nothing in this Article 20 shall relieve the **Contractor** of the obligation to pay the claims of all persons with valid and lawful claims against the **Contractor** relating to the **Work**.

20.8 The **Contractor** shall not require any performance, payment or other bonds of any **Subcontractor** if this **Contract** does not require such bonds of the **Contractor**.

20.9 The payment guarantee made pursuant to this Article 20 shall be construed in a manner consistent with Section 137 of the State Finance Law and shall afford to persons furnishing labor or materials to the **Contractor** or its **Subcontractors** in the prosecution of the **Work** under this **Contract** all of the rights and remedies afforded to such persons by such section, including but not limited to, the right

to commence an action against the **City** on the payment guarantee provided by this Article 20 within the one-year limitations period set forth in Section 137(4)(b).

ARTICLE 21. RETAINED PERCENTAGE

21.1 If this **Contract** requires one hundred (100%) percent performance and payment security, then as further security for the faithful performance of this **Contract**, the **Commissioner** shall deduct, and retain until the substantial completion of the **Work**, five (5%) percent of the value of **Work** certified for payment in each partial payment voucher.

21.2 If this **Contract** does not require one hundred (100%) percent performance and payment security and if the price for which this **Contract** was awarded does not exceed one million ($1,000,000) dollars, then as further security for the faithful performance of this **Contract**, the **Commissioner** shall deduct, and retain until the substantial completion of the **Work**, five (5%) percent of the value of **Work** certified for payment in each partial payment voucher.

21.3 If this **Contract** does not require one hundred (100%) percent performance and payment security and if the price for which this **Contract** was awarded exceeds one million ($1,000,000) dollars, then as further security for the faithful performance of this **Contract,** the **Commissioner** shall deduct, and retain until the substantial completion of the **Work**, up to ten (10%) percent of the value of **Work** certified for payment in each partial payment voucher. The percentage to be retained is set forth in Schedule A of the General Conditions.

ARTICLE 22. INSURANCE

22.1 Types of Insurance: The **Contractor** shall procure and maintain the following types of insurance if, and as indicated, in Schedule A of the General Conditions (with the minimum limits and special conditions specified in Schedule A). Such insurance shall be maintained from the date the **Contractor** is required to provide Proof of Insurance pursuant to Article 22.3.1 through the date of completion of all required **Work** (including punch list work as certified in writing by the **Resident Engineer**), except for insurance required pursuant to Article 22.1.4, which may terminate upon **Substantial Completion** of the **Contract**. All insurance shall meet the requirements set forth in this Article 22. Wherever this Article requires that insurance coverage be "at least as broad" as a specified form (including all ISO forms), there is no obligation that the form itself be used, provided that the **Contractor** can demonstrate that the alternative form or endorsement contained in its policy provides coverage at least as broad as the specified form.

22.1.1 Commercial General Liability Insurance: The **Contractor** shall provide Commercial General Liability Insurance covering claims for property damage and/or bodily injury, including death, which may arise from any of the operations under this **Contract**. Coverage under this insurance shall be at least as broad as that provided by the latest edition of Insurance Services Office ("ISO") Form CG 0001. Such insurance shall be "occurrence" based rather than "claims-made" and include, without limitation, the following types of coverage: premises operations; products and completed operations; contractual liability (including the tort liability of another assumed in a contract); broad form property damage; independent contractors; explosion, collapse and underground (XCU); construction means and methods; and incidental malpractice. Such insurance shall contain a "per project" aggregate limit, as specified in Schedule A, that applies separately to operations under this **Contract**.

22.1.1(a) Such Commercial General Liability Insurance shall name the **City** as an Additional Insured. Coverage for the City shall specifically include the **City's** officials and employees, be at least as broad as the latest edition of ISO Form CG 20 10 and provide completed operations coverage at least as broad as the latest edition of ISO Form CG 20 37.

22.1.1(b) Such Commercial General Liability Insurance shall name all other entities designated as additional insureds in Schedule A but only for claims arising from the **Contractor's** operations under this **Contract**, with coverage at least as broad as the latest edition of ISO Form CG 20 26.

22.1.1(c) If the **Work** requires a permit from the Department of Buildings pursuant to 1 RCNY Section 101-08, at http://www.nyc.gov/html/dob/downloads/rules/1_RCNY_101-08.pdf, the **Contractor** shall provide Commercial General Liability Insurance with limits of at least those required by 1 RCNY section 101-08. If the **Work** does not require such a permit, the minimum limits shall be those provided for in Schedule A.

22.1.1(d) If any of the **Work** includes repair of a waterborne vessel owned by or to be delivered to the **City**, such Commercial General Liability shall include, or be endorsed to include, Ship Repairer's Legal Liability Coverage to protect against, without limitation, liability arising from navigation of such vessels prior to delivery to and acceptance by the **City**.

22.1.2 Workers' Compensation Insurance, Employers' Liability Insurance, and Disability Benefits Insurance: The **Contractor** shall provide, and shall cause its **Subcontractors** to provide, Workers Compensation Insurance, Employers' Liability Insurance, and Disability Benefits Insurance in accordance with the **Laws** of the State of New York on behalf of all employees providing services under this **Contract** (except for those employees, if any, for which the **Laws** require insurance only pursuant to Article 22.1.3).

22.1.3 United States Longshoremen's and Harbor Workers Act and/or Jones Act Insurance: If specified in Schedule A of the General Conditions or if required by **Law**, the **Contractor** shall provide insurance in accordance with the United States Longshoremen's and Harbor Workers Act and/or the Jones Act, on behalf of all qualifying employees providing services under this **Contract**.

22.1.4 Builders Risk Insurance: If specified in Schedule A of the General Conditions, the **Contractor** shall provide Builders Risk Insurance on a completed value form for the total value of the **Work** through **Substantial Completion** of the **Work** in its entirety. Such insurance shall be provided on an All Risk basis and include coverage, without limitation, for windstorm (including named windstorm), storm surge, flood and earth movement. Unless waived by the **Commissioner**, it shall include coverage for ordinance and law, demolition and increased costs of construction, debris removal, pollutant clean up and removal, and expediting costs. Such insurance shall cover, without limitation, (a) all buildings and/or structures involved in the **Work**, as well as temporary structures at the **Site**, and (b) any property that is intended to become a permanent part of such building or structure, whether such property is on the **Site**, in transit or in temporary storage. Policies shall name the **Contractor** as Named Insured and list the **City** as both an Additional Insured and a Loss Payee as its interest may appear.

22.1.4(a) Policies of such insurance shall specify that, in the event a loss occurs at an occupied facility, occupancy of such facility is permitted without the consent of the issuing insurance company.

22.1.4(b) Such insurance may be provided through an Installation Floater, at the **Contractor's** option, if it otherwise conforms with the requirements of this Article 22.1.4.

22.1.5 Commercial Automobile Liability Insurance: The **Contractor** shall provide Commercial Automobile Liability Insurance for liability arising out of ownership, maintenance or use of any owned (if any), non-owned and hired vehicles to be used in connection with this **Contract**. Coverage shall be at least as broad as the latest edition of ISO Form CA0001. If vehicles are used for transporting hazardous materials, the Automobile Liability Insurance shall be endorsed to provide pollution liability broadened coverage for covered vehicles (endorsement CA 99 48) as well as proof of MCS 90.

22.1.6 Contractors Pollution Liability Insurance: If specified in Schedule A of the General Conditions, the **Contractor** shall maintain, or cause the **Subcontractor** doing such **Work** to maintain, Contractors Pollution Liability Insurance covering bodily injury and property damage. Such insurance shall provide coverage for actual, alleged or threatened emission, discharge, dispersal, seepage, release or escape of pollutants (including asbestos), including any loss, cost or expense incurred as a result of any cleanup of pollutants (including asbestos) or in the investigation, settlement or defense of any claim, action, or proceedings arising from the operations under this **Contract**. Such insurance shall be in the **Contractor's** name and list the **City** as an Additional Insured and any other entity specified in Schedule A. Coverage shall include, without limitation, (a) loss of use of damaged property or of property that has not been physically injured, (b) transportation, and (c) non-owned disposal sites.

22.1.6(a) Coverage for the **City** as Additional Insured shall specifically include the **City's** officials and employees and be at least as broad as provided to the **Contractor** for this **Project**.

22.1.6(b) If such insurance is written on a claims-made policy, such policy shall have a retroactive date on or before the effective date of this **Contract**, and continuous coverage shall be maintained, or an extended discovery period exercised, for a period of not less than three (3) years from the time the **Work** under this **Contract** is completed.

22.1.7 Marine Insurance:

22.1.7(a) Marine Protection and Indemnity Insurance: If specified in Schedule A of the General Conditions or if the **Contractor** engages in marine operations in the execution of any part of the **Work**, the **Contractor** shall maintain, or cause the **Subcontractor** doing such Work to maintain, Marine Protection and Indemnity Insurance with coverage at least as broad as Form SP-23. The insurance shall provide coverage for the **Contractor** or **Subcontractor** (whichever is doing this **Work**) and for the **City** (together with its officials and employees) and any other entity specified in Schedule A as an Additional Insured for bodily injury and property damage arising from marine operations under this **Contract**. Coverage shall include, without limitation, injury or death of crew members (if not fully provided through other insurance), removal of wreck, damage to piers, wharves and other fixed or floating objects and loss of or damage to any other vessel or craft, or to property on such other vessel or craft.

22.1.7(b) Hull and Machinery Insurance: If specified in Schedule A of the General Conditions or if the **Contractor** engages in marine operations in the execution of any part of the **Work**, the **Contractor** shall maintain, or cause the **Subcontractor** doing such **Work** to maintain, Hull and Machinery Insurance with coverage for the **Contractor** or **Subcontractor** (whichever is doing this Work) and for the **City** (together with its officials and employees) as Additional Insured at least as broad as the latest edition of American Institute Tug Form for all tugs used under this **Contract** and Collision Liability at least as broad as the latest edition of American Institute Hull Clauses.

22.1.7(c) Marine Pollution Liability Insurance: If specified in Schedule A of the General Conditions or if the **Contractor** engages in marine operations in the execution of any part of the **Work**, the **Contractor** shall maintain, or cause the **Subcontractor** doing such Work to maintain, Marine Pollution Liability Insurance covering itself (or the Subcontractor doing such Work) as Named Insured and the **City** (together with its officials and employees) and any other entity specified in Schedule A as an Additional Insured. Coverage shall be at least as broad as that provided by the latest edition of Water Quality Insurance Syndicate Form and include, without limitation, liability arising from the discharge or substantial threat of a discharge of oil, or from the release or threatened release of a hazardous substance including injury to, or economic losses resulting from, the destruction of or damage to real property, personal property or natural resources.

22.1.8 The **Contractor** shall provide such other types of insurance, at such minimum limits and with such conditions, as are specified in Schedule A of the General Conditions.

22.2 General Requirements for Insurance Coverage and Policies:

22.2.1 All required insurance policies shall be maintained with companies that may lawfully issue the required policy and have an A.M. Best rating of at least A-/VII or a Standard and Poor's rating of at least A, unless prior written approval is obtained from the **City** Corporation Counsel.

22.2.2 The **Contractor** shall be solely responsible for the payment of all premiums for all required policies and all deductibles and self-insured retentions to which such policies are subject, whether or not the **City** is an insured under the policy.

22.2.3 In his/her sole discretion, the **Commissioner** may, subject to the approval of the **Comptroller** and the **City** Corporation Counsel, accept Letters of Credit and/or custodial accounts in lieu of required insurance.

22.2.4 The **City's** limits of coverage for all types of insurance required pursuant to Schedule A of the General Conditions shall be the greater of (i) the minimum limits set forth in Schedule A or (ii) the limits provided to the **Contractor** as Named Insured under all primary, excess, and umbrella policies of that type of coverage.

22.2.5 The **Contractor** may satisfy its insurance obligations under this Article 22 through primary policies or a combination of primary and excess/umbrella policies, so long as all policies provide the scope of coverage required herein.

22.2.6 Policies of insurance provided pursuant to this Article 22 shall be primary and non-contributing to any insurance or self-insurance maintained by the **City**.

22.3 Proof of Insurance:

22.3.1 For all types of insurance required by Article 22.1 and Schedule A, except for insurance required by Articles 22.1.4 and 22.1.7, the **Contractor** shall file proof of insurance in accordance with this Article 22.3 within ten (10) **Days** of award. For insurance provided pursuant to Articles 22.1.4 and 22.1.7, proof shall be filed by a date specified by the **Commissioner** or ten (10) **Days** prior to the commencement of the portion of the **Work** covered by such policy, whichever is earlier.

22.3.2 For Workers' Compensation Insurance provided pursuant to Article 22.1.2, the **Contractor** shall submit one of the following forms: C-105.2 Certificate of Workers' Compensation Insurance; U-26.3 - State Insurance Fund Certificate of Workers' Compensation Insurance; Request for WC/DB Exemption (Form CE-200); equivalent or successor forms used by the New York State Workers' Compensation Board; or other proof of insurance in a form acceptable to the **Commissioner**. For Disability Benefits Insurance provided pursuant to Article 22.1.2, the Contractor shall submit DB-120.1 - Certificate Of Insurance Coverage Under The NYS Disability Benefits Law, Request for WC/DB Exemption (Form CE-200); equivalent or successor forms used by the New York State Workers' Compensation Board; or other proof of insurance in a form acceptable to the **Commissioner**. ACORD forms are not acceptable.

22.3.3 For policies provided pursuant to all of Article 22.1 other than Article 22.1.2, the **Contractor** shall submit one or more Certificates of Insurance on forms acceptable to the **Commissioner**. All such Certificates of Insurance shall certify (a) the issuance and effectiveness of such policies of insurance, each with the specified minimum limits (b) for insurance secured pursuant to Article 22.1.1 that the **City** and any other entity specified in Schedule A is an Additional Insured with coverage at least as broad as the most recent edition of ISO Forms CG 20 10, CG 20 37, and CG 20 26, as applicable; (c) in the event insurance is required pursuant to Article 22.1.6 and/or Article 22.1.7, that the City is an Additional Insured thereunder; (d) the company code issued to the insurance company by the National Association of Insurance Commissioners (the NAIC number); and (e) the number assigned to the **Contract** by the **City**. All such Certificates of Insurance shall be accompanied by either a duly executed "Certification by Broker" in the form contained in Part III of Schedule A or copies of all policies referenced in such Certificate of Insurance as certified by an authorized representative of the issuing insurance carrier. If any policy is not available at the time of submission, certified binders may be submitted until such time as the policy is available, at which time a certified copy of the policy shall be submitted.

22.3.4 Documentation confirming renewals of insurance shall be submitted to the **Commissioner** prior to the expiration date of coverage of policies required under this **Contract**. Such proofs of insurance shall comply with the requirements of Articles 22.3.2 and 22.3.3.

22.3.5 The **Contractor** shall be obligated to provide the **City** with a copy of any policy of insurance provided pursuant to this Article 22 upon the demand for such policy by the **Commissioner** or the **City** Corporation Counsel.

22.4 Operations of the **Contractor**:

22.4.1 The **Contractor** shall not commence the **Work** unless and until all required certificates have been submitted to and accepted by the **Commissioner**. Acceptance by the **Commissioner** of a certificate does not excuse the **Contractor** from securing insurance

consistent with all provisions of this Article 22 or of any liability arising from its failure to do so.

22.4.2 The **Contractor** shall be responsible for providing continuous insurance coverage in the manner, form, and limits required by this **Contract** and shall be authorized to perform **Work** only during the effective period of all required coverage.

22.4.3 In the event that any of the required insurance policies lapse, are revoked, suspended or otherwise terminated, for whatever cause, the **Contractor** shall immediately stop all **Work**, and shall not recommence **Work** until authorized in writing to do so by the **Commissioner**. Upon quitting the **Site**, except as otherwise directed by the **Commissioner**, the **Contractor** shall leave all plant, materials, equipment, tools, and supplies on the **Site**. **Contract** time shall continue to run during such periods and no extensions of time will be granted. The **Commissioner** may also declare the **Contractor** in default for failure to maintain required insurance.

22.4.4 In the event the **Contractor** receives notice, from an insurance company or other person, that any insurance policy required under this Article 22 shall be cancelled or terminated (or has been cancelled or terminated) for any reason, the **Contractor** shall immediately forward a copy of such notice to both the **Commissioner** and the New York City Comptroller, attn: Office of Contract Administration, Municipal Building, One Centre Street, room 1005, New York, New York 10007. Notwithstanding the foregoing, the **Contractor** shall ensure that there is no interruption in any of the insurance coverage required under this Article 22.

22.4.5 Where notice of loss, damage, occurrence, accident, claim or suit is required under an insurance policy maintained in accordance with this Article 22, the **Contractor** shall notify in writing all insurance carriers that issued potentially responsive policies of any such event relating to any operations under this **Contract** (including notice to Commercial General Liability insurance carriers for events relating to the **Contractor**'s own employees) no later than 20 days after such event. For any policy where the **City** is an Additional Insured, such notice shall expressly specify that "this notice is being given on behalf of the City of New York as Insured as well as the Named Insured." Such notice shall also contain the following information: the number of the insurance policy, the name of the named insured, the date and location of the damage, occurrence, or accident, and the identity of the persons or things injured, damaged or lost. The **Contractor** shall simultaneously send a copy of such notice to the City of New York c/o Insurance Claims Specialist, Affirmative Litigation Division, New York City Law Department, 100 Church Street, New York, New York 10007.

22.4.6 In the event of any loss, accident, claim, action, or other event that does or can give rise to a claim under any insurance policy required under this Article 22, the **Contractor** shall at all times fully cooperate with the **City** with regard to such potential or actual claim.

22.5 **Subcontractor** Insurance: In the event the **Contractor** requires any **Subcontractor** to procure insurance with regard to any operations under this **Contract** and requires such **Subcontractor** to name the **Contractor** as an **Additional Insured** thereunder, the **Contractor** shall ensure that the **Subcontractor** name the **City**, including its officials and employees, as an Additional Insured with coverage at least as broad as the most recent edition of ISO Form CG 20 26.

22.6 Wherever reference is made in Article 7 or this Article 22 to documents to be sent to the **Commissioner** (e.g., notices, filings, or submissions), such documents shall be sent to the address set forth in Schedule A of the General Conditions. In the event no address is set forth in Schedule A, such documents are to be sent to the **Commissioner's** address as provided elsewhere in this **Contract**.

22.7 Apart from damages or losses covered by insurance provided pursuant to Articles 22.1.2, 22.1.3, or 22.1.5, the **Contractor** waives all rights against the **City**, including its officials and employees, for any damages or losses that are covered under any insurance required under this Article 22 (whether or not such insurance is actually procured or claims are paid thereunder) or any other insurance applicable to the operations of the **Contractor** and/or its employees, agents, or **Subcontractors**.

22.8 In the event the **Contractor** utilizes a self-insurance program to satisfy any of the requirements of this Article 22, the **Contractor** shall ensure that any such self-insurance program provides the **City** with all rights that would be provided by traditional insurance under this Article 22, including but not limited to the defense and indemnification obligations that insurers are required to undertake in liability policies.

22.9 Materiality/Non-Waiver: The **Contractor's** failure to secure policies in complete conformity with this Article 22, or to give an insurance company timely notice of any sort required in this **Contract** or to do anything else required by this Article 22 shall constitute a material breach of this **Contract**. Such breach shall not be waived or otherwise excused by any action or inaction by the **City** at any time.

22.10 Pursuant to General Municipal Law Section 108, this **Contract** shall be void and of no effect unless **Contractor** maintains Workers' Compensation Insurance for the term of this **Contract** to the extent required and in compliance with the New York State Workers' Compensation Law.

22.11 Other Remedies: Insurance coverage provided pursuant to this Article 22 or otherwise shall not relieve the **Contractor** of any liability under this **Contract**, nor shall it preclude the **City** from exercising any rights or taking such other actions available to it under any other provisions of this **Contract** or **Law**.

ARTICLE 23. MONEY RETAINED AGAINST CLAIMS

23.1 If any claim shall be made by any person or entity (including **Other Contractors** with the **City** on this **Project**) against the **City** or against the **Contractor** and the **City** for any of the following:

(a) An alleged loss, damage, injury, theft or vandalism of any of the kinds referred to in Articles 7 and 12, plus the reasonable costs of defending the **City**, which in the opinion of the **Comptroller** may not be paid by an insurance company (for any reason whatsoever); or

(b) An infringement of copyrights, patents or use of patented articles, tools, etc., as referred to in Article 57; or

(c) Damage claimed to have been caused directly or indirectly by the failure of the **Contractor** to perform the **Work** in strict accordance with this **Contract,**

the amount of such claim, or so much thereof as the **Comptroller** may deem necessary, may be withheld by the **Comptroller**, as security against such claim, from any money due hereunder. The **Comptroller**, in his/her discretion, may permit the **Contractor** to substitute other satisfactory security in lieu of the monies so withheld.

23.2 If an action on such claim is timely commenced and the liability of the **City**, or the **Contractor**, or both, shall have been established therein by a final judgment of a court of competent jurisdiction, or if such claim shall have been admitted by the **Contractor** to be valid, the **Comptroller**

shall pay such judgment or admitted claim out of the monies retained by the **Comptroller** under the provisions of this Article 23, and return the balance, if any, without interest, to the **Contractor**.

ARTICLE 24. MAINTENANCE AND GUARANTY

24.1 The **Contractor** shall promptly repair, replace, restore or rebuild, as the **Commissioner** may determine, any finished **Work** in which defects of materials or workmanship may appear or to which damage may occur because of such defects, during the one (1) year period subsequent to the date of **Substantial Completion** (or use and occupancy in accordance with Article 16), except where other periods of maintenance and guaranty are provided for in Schedule A.

24.2 As security for the faithful performance of its obligations hereunder, the **Contractor**, upon filing its requisition for payment on **Substantial Completion**, shall deposit with the **Commissioner** a sum equal to one (1%) percent of the price (or the amount fixed in Schedule A of the General Conditions) in cash or certified check upon a state or national bank and trust company or a check of such bank and trust company signed by a duly authorized officer thereof and drawn to the order of the **Comptroller**, or obligations of the **City**, which the **Comptroller** may approve as of equal value with the sum so required.

24.3 In lieu of the above, the **Contractor** may make such security payment to the **City** by authorizing the **Commissioner** in writing to deduct the amount from the **Substantial Completion** payment which shall be deemed the deposit required above.

24.4 If the **Contractor** has faithfully performed all of its obligations hereunder the **Commissioner** shall so certify to the **Comptroller** within five (5) **Days** after the expiration of one (1) year from the date of **Substantial Completion** and acceptance of the **Work** or within thirty (30) **Days** after the expiration of the guarantee period fixed in the **Specifications**. The security payment shall be repaid to the **Contractor** without interest within thirty (30) **Days** after certification by the **Commissioner** to the **Comptroller** that the **Contractor** has faithfully performed all of its obligations hereunder.

24.5 Notice by the **Commissioner** to the **Contractor** to repair, replace, rebuild or restore such defective or damaged **Work** shall be timely, pursuant to this article, if given not later than ten (10) **Days** subsequent to the expiration of the one (1) year period or other periods provided for herein.

24.6 If the **Contractor** shall fail to repair, replace, rebuild or restore such defective or damaged **Work** promptly after receiving such notice, the **Commissioner** shall have the right to have the **Work** done by others in the same manner as provided for in the completion of a defaulted **Contract**, under Article 51.

24.7 If the security payment so deposited is insufficient to cover the cost of such **Work**, the **Contractor** shall be liable to pay such deficiency on demand by the **Commissioner**.

24.8 The **Engineer's** certificate setting forth the fair and reasonable cost of repairing, replacing, rebuilding or restoring any damaged or defective **Work** when performed by one other than the **Contractor**, shall be binding and conclusive upon the **Contractor** as to the amount thereof.

24.9 The **Contractor** shall obtain all manufacturers' warranties and guaranties of all equipment and materials required by this **Contract** in the name of the **City** and shall deliver same to the **Commissioner**. All of the **City's** rights and title and interest in and to said manufacturers' warranties and guaranties may be assigned by the **City** to any subsequent purchasers of such equipment and materials or lessees of the premises into which the equipment and materials have been installed.

CHAPTER VI
CHANGES, EXTRA WORK, AND DOCUMENTATION OF CLAIM

ARTICLE 25. CHANGES

25.1 Changes may be made to this **Contract** only as duly authorized in writing by the **Commissioner** in accordance with the **Law** and this **Contract**. All such changes, modifications, and amendments will become a part of the **Contract**. **Work** so ordered shall be performed by the **Contractor**.

25.2 **Contract** changes will be made only for **Work** necessary to complete the **Work** included in the original scope of the **Contract** and/or for non-material changes to the scope of the **Contract**. Changes are not permitted for any material alteration in the scope of **Work** in the **Contract**.

25.3 The **Contractor** shall be entitled to a price adjustment for **Extra Work** performed pursuant to a written change order. Adjustments to price shall be computed in one or more of the following ways:

25.3.1 By applicable unit prices specified in the **Contract**; and/or

25.3.2 By agreement of a fixed price; and/or

25.3.3 By time and material records; and/or

25.3.4 In any other manner approved by the **CCPO**.

25.4 All payments for change orders are subject to pre-audit by the **Engineering Audit Officer** and may be post-audited by the **Comptroller** and/or the **Agency**.

ARTICLE 26. METHODS OF PAYMENT FOR OVERRUNS AND EXTRA WORK

26.1 Overrun of Unit Price Item: An overrun is any quantity of a unit price item which the **Contractor** is directed to provide which is in excess of one hundred twenty-five (125%) percent of the estimated quantity for that item set forth in the bid schedule.

26.1.1For any unit price item, the **Contractor** will be paid at the unit price bid for any quantity up to one hundred twenty-five (125%) percent of the estimated quantity for that item set forth in the bid schedule. If during the progress of the **Work**, the actual quantity of any unit price item required to complete the **Work** approaches the estimated quantity for that item, and for any reason it appears that the actual quantity of any unit price item necessary to complete the **Work** will exceed the estimated quantity for that item by twenty-five (25%) percent, the **Contractor** shall immediately notify the **Engineer** of such anticipated overrun. The **Contractor** shall not be compensated for any quantity of a unit price item provided which is in excess of one hundred twenty-five (125%) percent of the estimated quantity for that item set forth in the bid schedule without written authorization from the **Engineer**.

26.1.2If the actual quantity of any unit price item necessary to complete the **Work** will exceed one hundred twenty five (125%) percent of the estimated quantity for that item set forth in the bid schedule, the **City** reserves the right and the **Contractor** agrees to negotiate a new unit price for such item. In no event shall such negotiated new unit price exceed the unit bid price. If the **City** and **Contractor** cannot agree on a new unit price, then the **City** shall order the **Contractor** and the **Contractor** agrees to provide additional quantities of the

item on the basis of time and material records for the actual and reasonable cost as determined under Article 26.2, but in no event at a unit price exceeding the unit price bid.

26.2 **Extra Work:** For **Extra Work** where payment is by agreement on a fixed price in accordance with Article 25.3.2, the price to be paid for such **Extra Work** shall be based on the fair and reasonable estimated cost of the items set forth below. For **Extra Work** where payment is based on time and material records in accordance with Article 25.3.3, the price to be paid for such **Extra Work** shall be the actual and reasonable cost of the items set forth below, calculated in accordance with the formula specified therein, if any.

26.2.1 Necessary materials (including transportation to the **Site**); plus

26.2.2 Necessary direct labor, including payroll taxes (subject to statutory wage caps) and supplemental benefits; plus

26.2.3 Sales and personal property taxes, if any, required to be paid on materials not incorporated into such **Extra Work**; plus

26.2.4 Reasonable rental value of **Contractor**-owned (or **Subcontractor**-owned, as applicable), necessary plant and equipment other than **Small Tools**, plus fuel/energy costs. Except for fuel costs for pick-up trucks which shall be reimbursed based on a consumption of five (5) gallons per shift, fuel costs shall be reimbursed based on actual costs or, in the absence of auditable documentation, the following fuel consumption formula per operating hour: (.035) x (HP rating) x (Fuel cost/gallon). Reasonable rental value is defined as the lower of either seventy-five percent of the monthly prorated rental rates established in "The AED Green Book, Rental Rates and Specifications for Construction Equipment" published by Equipment Watch (the "Green Book"), or seventy-five percent of the monthly prorated rental rates established in the "Rental Rate Blue Book for Construction Equipment" published by Equipment Watch (the "Blue Book") (the applicable Blue Book rate being for rental only without the addition of any operational costs listed in the Blue Book). The reasonable rental value is deemed to be inclusive of all operating costs except for fuel/energy consumption and equipment operator's wages/costs. For multiple shift utilization, reimbursement shall be calculated as follows: first shift shall be seventy-five (75%) percent of such rental rates; second shift shall be sixty (60%) percent of the first shift rate; and third shift shall be forty (40%) percent of the first shift rate. Equipment on standby shall be reimbursed at one-third (1/3) the prorated monthly rental rate. **Contractor**-owned (or **Subcontractor**-owned, as applicable) equipment includes equipment from rental companies affiliated with or controlled by the **Contractor** (or **Subcontractor**, as applicable), as determined by the **Commissioner**. In establishing cost reimbursement for non-operating **Contractor**-owned (or **Subcontractor**-owned, as applicable) equipment (scaffolding, sheeting systems, road plates, etc.), the **City** may restrict reimbursement to a purchase-salvage/life cycle basis if less than the computed rental costs; plus

26.2.5 Necessary installation and dismantling of such plant and equipment, including transportation to and from the **Site**, if any, provided that, in the case of non-**Contractor**-owned (or non-**Subcontractor**-owned, as applicable) equipment rented from a third party, the cost of installation and dismantling are not allowable if such costs are included in the rental rate; plus

26.2.6 Necessary fees charged by governmental entities; plus

26.2.7 Necessary construction-related service fees charged by non-governmental entities, such as landfill tipping fees; plus

26.2.8 Reasonable rental costs of non-**Contractor**-owned (or non-**Subcontractor**-owned, as applicable) necessary plant and equipment other than **Small Tools**, plus fuel/energy costs. Except for fuel costs for pick-up trucks which shall be reimbursed based on a consumption of five (5) gallons per shift, fuel costs shall be reimbursed based on actual costs or, in the absence of auditable documentation, the following fuel consumption formula per hour of operation: (.035) x (HP rating) x (Fuel cost/gallon). In lieu of renting, the **City** reserves the right to direct the purchase of non-operating equipment (scaffolding, sheeting systems, road plates, etc.), with payment on a purchase-salvage/life cycle basis, if less than the projected rental costs; plus

26.2.9 Workers' Compensation Insurance, and any insurance coverage expressly required by the **City** for the performance of the **Extra Work** which is different than the types of insurance required by Article 22 and Schedule A of the General Conditions. The cost of Workers' Compensation Insurance is subject to applicable payroll limitation caps and shall be based upon the carrier's Manual Rate for such insurance derived from the applicable class Loss Cost ("LC") and carrier's Lost Cost Multiplier ("LCM") approved by the New York State Department of Financial Services, and with the exception of experience rating, rate modifiers as promulgated by the New York Compensation Insurance Rating Board ("NYCIRB"); plus

26.2.10 Additional costs incurred as a result of the **Extra Work** for performance and payment bonds; plus

26.2.11 Twelve percent (12%) percent of the total of items in Articles 26.2.1 through 26.2.5 as compensation for overhead, except that no percentage for overhead will be allowed on **Payroll Taxes** or on the premium portion of overtime pay or on sales and personal property taxes. Overhead shall include without limitation, all costs and expenses in connection with administration, management superintendence, small tools, and insurance required by Schedule A of the General Conditions other than Workers' Compensation Insurance; plus

26.2.12 Ten (10%) percent of the total of items in Articles 26.2.1 through 26.2.5, plus the items in Article 26.2.11, as compensation for profit, except that no percentage for profit will be allowed on **Payroll Taxes** or on the premium portion of overtime pay or on sales and personal property taxes; plus

26.2.13 Five (5%) percent of the total of items in Articles 26.2.6 through 26.2.10 as compensation for overhead and profit.

26.3 Where the **Extra Work** is performed in whole or in part by other than the **Contractor's** own forces pursuant to Article 26.2, the **Contractor** shall be paid, subject to pre-audit by the **Engineering Audit Officer**, the cost of such **Work** computed in accordance with Article 26.2 above, plus an additional allowance of five (5%) percent to cover the **Contractor's** overhead and profit.

26.4 Where a change is ordered, involving both **Extra Work** and omitted or reduced **Contract Work,** the **Contract** price shall be adjusted, subject to pre-audit by the **EAO**, in an amount based on the difference between the cost of such **Extra Work** and of the omitted or reduced **Work**.

26.5 Where the **Contractor** and the **Commissioner** can agree upon a fixed price for **Extra Work** in accordance with Article 25.3.2 or another method of payment for **Extra Work** in accordance with Article

25.3.4, or for **Extra Work** ordered in connection with omitted **Work**, such method, subject to pre-audit by the **EAO**, may, at the option of the **Commissioner**, be substituted for the cost plus a percentage method provided in Article 26.2; provided, however, that if the **Extra Work** is performed by a **Subcontractor**, the **Contractor** shall not be entitled to receive more than an additional allowance of five (5%) percent for overhead and profit over the cost of such **Subcontractor's Work** as computed in accordance with Article 26.2.

ARTICLE 27. RESOLUTION OF DISPUTES

27.1 All disputes between the **City** and the **Contractor** of the kind delineated in this Article 27.1 that arise under, or by virtue of, this **Contract** shall be finally resolved in accordance with the provisions of this Article 27 and the **PPB** Rules. This procedure for resolving all disputes of the kind delineated herein shall be the exclusive means of resolving any such disputes.

27.1.1 This Article 27 shall not apply to disputes concerning matters dealt with in other sections of the **PPB** Rules, or to disputes involving patents, copyrights, trademarks, or trade secrets (as interpreted by the courts of New York State) relating to proprietary rights in computer software.

27.1.2 This Article 27 shall apply only to disputes about the scope of **Work** delineated by the **Contract**, the interpretation of **Contract** documents, the amount to be paid for **Extra Work** or disputed work performed in connection with the **Contract**, the conformity of the **Contractor's Work** to the **Contract**, and the acceptability and quality of the **Contractor's Work**; such disputes arise when the **Engineer**, **Resident Engineer**, **Engineering Audit Officer**, or other designee of the **Commissioner** makes a determination with which the **Contractor** disagrees.

27.2 All determinations required by this Article 27 shall be made in writing clearly stated, with a reasoned explanation for the determination based on the information and evidence presented to the party making the determination. Failure to make such determination within the time required by this Article 27 shall be deemed a non-determination without prejudice that will allow application to the next level.

27.3 During such time as any dispute is being presented, heard, and considered pursuant to this Article 27, the **Contract** terms shall remain in force and the **Contractor** shall continue to perform **Work** as directed by the **ACCO** or the **Engineer**. Failure of the **Contractor** to continue **Work** as directed shall constitute a waiver by the **Contractor** of its claim.

27.4 Presentation of Disputes to **Commissioner**.

Notice of Dispute and Agency Response. The **Contractor** shall present its dispute in writing ("Notice of Dispute") to the **Commissioner** within thirty (30) Days of receiving written notice of the determination or action that is the subject of the dispute. This notice requirement shall not be read to replace any other notice requirements contained in the **Contract**. The Notice of Dispute shall include all the facts, evidence, documents, or other basis upon which the **Contractor** relies in support of its position, as well as a detailed computation demonstrating how any amount of money claimed by the **Contractor** in the dispute was arrived at. Within thirty (30) Days after receipt of the detailed written submission comprising the complete Notice of Dispute, the **Engineer**, **Resident Engineer**, **Engineering Audit Officer**, or other designee of the **Commissioner** shall submit to the **Commissioner** all materials he or she deems pertinent to the dispute. Following initial submissions to the **Commissioner**, either party may demand of the other the production of any document or other material the demanding party believes may be relevant to the dispute. The requested party shall produce all relevant materials that are not otherwise

protected by a legal privilege recognized by the courts of New York State. Any question of relevancy shall be determined by the **Commissioner** whose decision shall be final. Willful failure of the **Contractor** to produce any requested material whose relevancy the **Contractor** has not disputed, or whose relevancy has been affirmatively determined, shall constitute a waiver by the **Contractor** of its claim.

27.4.1 **Commissioner** Inquiry. The **Commissioner** shall examine the material and may, in his or her discretion, convene an informal conference with the **Contractor**, the **ACCO**, and the **Engineer, Resident Engineer, Engineering Audit Officer**, or other designee of the **Commissioner** to resolve the issue by mutual consent prior to reaching a determination. The **Commissioner** may seek such technical or other expertise as he or she shall deem appropriate, including the use of neutral mediators, and require any such additional material from either or both parties as he or she deems fit. The **Commissioner's** ability to render, and the effect of, a decision hereunder shall not be impaired by any negotiations in connection with the dispute presented, whether or not the **Commissioner** participated therein. The **Commissioner** may or, at the request of any party to the dispute, shall compel the participation of any **Other Contractor** with a contract related to the **Work** of this **Contract**, and that **Contractor** shall be bound by the decision of the **Commissioner**. Any **Other Contractor** thus brought into the dispute resolution proceeding shall have the same rights and obligations under this Article 27 as the **Contractor** initiating the dispute.

27.4.2 **Commissioner** Determination. Within thirty (30) **Days** after the receipt of all materials and information, or such longer time as may be agreed to by the parties, the **Commissioner** shall make his or her determination and shall deliver or send a copy of such determination to the **Contractor**, the **ACCO,** and **Engineer, Resident Engineer, Engineering Audit Officer**, or other designee of the **Commissioner**, as applicable, together with a statement concerning how the decision may be appealed.

27.4.3 Finality of **Commissioner's** Decision. The **Commissioner's** decision shall be final and binding on all parties, unless presented to the Contract Dispute Resolution Board pursuant to this Article 27. The **City** may not take a petition to the Contract Dispute Resolution Board. However, should the **Contractor** take such a petition, the **City** may seek, and the Contract Dispute Resolution Board may render, a determination less favorable to the **Contractor** and more favorable to the **City** than the decision of the **Commissioner**.

27.5 Presentation of Dispute to the **Comptroller**. Before any dispute may be brought by the **Contractor** to the Contract Dispute Resolution Board, the **Contractor** must first present its claim to the **Comptroller** for his or her review, investigation, and possible adjustment.

27.5.1 Time, Form, and Content of Notice. Within thirty (30) **Days** of its receipt of a decision by the **Commissioner,** the **Contractor** shall submit to the **Comptroller** and to the **Commissioner** a Notice of Claim regarding its dispute with the **Agency**. The Notice of Claim shall consist of (i) a brief written statement of the substance of the dispute, the amount of money, if any, claimed and the reason(s) the **Contractor** contends the dispute was wrongly decided by the **Commissioner**; (ii) a copy of the written decision of the **Commissioner**; and (iii) a copy of all materials submitted by the **Contractor** to the **Agency**, including the Notice of Dispute. The **Contractor** may not present to the **Comptroller** any material not presented to the **Commissioner**, except at the request of the **Comptroller**.

27.5.2 Response. Within thirty (30) **Days** of receipt of the Notice of Claim, the **Agency** shall make available to the **Comptroller** a copy of all material submitted by the **Agency** to the **Commissioner** in connection with the dispute. The **Agency** may not present to the

Comptroller any material not presented to the **Commissioner** except at the request of the **Comptroller**.

27.5.3 **Comptroller** Investigation. The **Comptroller** may investigate the claim in dispute and, in the course of such investigation, may exercise all powers provided in Sections 7-201 and 7-203 of the Administrative Code. In addition, the **Comptroller** may demand of either party, and such party shall provide, whatever additional material the **Comptroller** deems pertinent to the claim, including original business records of the **Contractor**. Willful failure of the **Contractor** to produce within fifteen (15) **Days** any material requested by the **Comptroller** shall constitute a waiver by the **Contractor** of its claim. The **Comptroller** may also schedule an informal conference to be attended by the **Contractor**, **Agency** representatives, and any other personnel desired by the **Comptroller**.

27.5.4 Opportunity of **Comptroller** to Compromise or Adjust Claim. The **Comptroller** shall have forty-five (45) **Days** from his or her receipt of all materials referred to in Article 27.5.3 to investigate the disputed claim. The period for investigation and compromise may be further extended by agreement between the **Contractor** and the **Comptroller**, to a maximum of ninety (90) **Days** from the **Comptroller's** receipt of all materials. The **Contractor** may not present its petition to the Contract Dispute Resolution Board until the period for investigation and compromise delineated in this Article 27.5.4 has expired. In compromising or adjusting any claim hereunder, the **Comptroller** may not revise or disregard the terms of the **Contract** between the parties.

27.6 Contract Dispute Resolution Board. There shall be a Contract Dispute Resolution Board composed of:

27.6.1 The chief administrative law judge of the Office of Administrative Trials and Hearings (OATH) or his/her designated OATH administrative law judge, who shall act as chairperson, and may adopt operational procedures and issue such orders consistent with this Article 27 as may be necessary in the execution of the Contract Dispute Resolution Board's functions, including, but not limited to, granting extensions of time to present or respond to submissions;

27.6.2 The **CCPO** or his/her designee; any designee shall have the requisite background to consider and resolve the merits of the dispute and shall not have participated personally and substantially in the particular matter that is the subject of the dispute or report to anyone who so participated; and

27.6.3 A person with appropriate expertise who is not an employee of the **City**. This person shall be selected by the presiding administrative law judge from a prequalified panel of individuals, established and administered by OATH with appropriate background to act as decision-makers in a dispute. Such individual may not have a contract or dispute with the **City** or be an officer or employee of any company or organization that does, or regularly represents persons, companies, or organizations having disputes with the **City**.

27.7 Petition to the Contract Dispute Resolution Board. In the event the claim has not been settled or adjusted by the **Comptroller** within the period provided in this Article 27, the **Contractor**, within thirty (30) **Days** thereafter, may petition the Contract Dispute Resolution Board to review the **Commissioner's** determination.

27.7.1 Form and Content of Petition by **Contractor**. The **Contractor** shall present its dispute to the Contract Dispute Resolution Board in the form of a petition, which shall

include (i) a brief written statement of the substance of the dispute, the amount of money, if any, claimed, and the reason(s) the **Contractor** contends the dispute was wrongly decided by the **Commissioner**; (ii) a copy of the written Decision of the **Commissioner,** (iii) copies of all materials submitted by the **Contractor** to the Agency; (iv) a copy of the written decision of the **Comptroller**, if any, and (v) copies of all correspondence with, or written material submitted by the **Contractor**, to the **Comptroller**. The **Contractor** shall concurrently submit four (4) complete sets of the Petition: one set to the **City** Corporation Counsel (Attn: Commercial and Real Estate Litigation Division) and three (3) sets to the Contract Dispute Resolution Board at OATH's offices with proof of service on the **City** Corporation Counsel. In addition, the **Contractor** shall submit a copy of the written statement of the substance of the dispute, cited in (i) above, to both the **Commissioner** and the **Comptroller**.

27.7.2 **Agency** Response. Within thirty (30) **Days** of its receipt of the Petition by the **City** Corporation Counsel, the **Agency** shall respond to the brief written statement of the **Contractor** and make available to the Contract Dispute Resolution Board all material it submitted to the **Commissioner** and **Comptroller**. Three (3) complete copies of the **Agency** response shall be provided to the Contract Dispute Resolution Board and one to the **Contractor**. Extensions of time for submittal of the **Agency** response shall be given as necessary upon a showing of good cause or, upon consent of the parties, for an initial period of up to thirty (30) Days.

27.7.3 Further Proceedings. The Contract Dispute Resolution Board shall permit the **Contractor** to present its case by submission of memoranda, briefs, and oral argument. The Contract Dispute Resolution Board shall also permit the **Agency** to present its case in response to the **Contractor** by submission of memoranda, briefs, and oral argument. If requested by the **City** Corporation Counsel, the **Comptroller** shall provide reasonable assistance in the preparation of the **Agency's** case. Neither the **Contractor** nor the **Agency** may support its case with any documentation or other material that was not considered by the **Comptroller**, unless requested by the Contract Dispute Resolution Board. The Contract Dispute Resolution Board, in its discretion, may seek such technical or other expert advice as it shall deem appropriate and may seek, on its own or upon application of a party, any such additional material from any party as it deems fit. The Contract Dispute Resolution Board, in its discretion, may combine more than one dispute between the parties for concurrent resolution.

27.7.4 Contract Dispute Resolution Board Determination. Within forty-five (45) **Days** of the conclusion of all written submissions and oral arguments, the Contract Dispute Resolution Board shall render a written decision resolving the dispute. In an unusually complex case, the Contract Dispute Resolution Board may render its decision in a longer period, not to exceed ninety (90) **Days**, and shall so advise the parties at the commencement of this period. The Contract Dispute Resolution Board's decision must be consistent with the terms of the **Contract**. Decisions of the Contract Dispute Resolution Board shall only resolve matters before the Contract Dispute Resolution Board and shall not have precedential effect with respect to matters not before the Contract Dispute Resolution Board.

27.7.5 Notification of Contract Dispute Resolution Board Decision. The Contract Dispute Resolution Board shall send a copy of its decision to the **Contractor**, the **ACCO**, the Engineer, the **Comptroller**, the **City** Corporation Counsel, the CCPO, and the **PPB**. A decision in favor of the **Contractor** shall be subject to the prompt payment provisions of the **PPB** Rules. The Required Payment Date shall be thirty (30) Days after the date the parties are formally notified of the Contract Dispute Resolution Board's decision.

27.7.6 Finality of Contract Dispute Resolution Board Decision. The Contract Dispute Resolution Board's decision shall be final and binding on all parties. Any party may seek review of the Contract Dispute Resolution Board's decision solely in the form of a challenge, filed within four (4) months of the date of the Contract Dispute Resolution Board's decision, in a court of competent jurisdiction of the State of New York, County of New York pursuant to Article 78 of the Civil Practice Law and Rules. Such review by the court shall be limited to the question of whether or not the Contract Dispute Resolution Board's decision was made in violation of lawful procedure, was affected by an error of **Law**, or was arbitrary and capricious or an abuse of discretion. No evidence or information shall be introduced or relied upon in such proceeding that was not presented to the Contract Dispute Resolution Board in accordance with this Article 27.

27.8 Any termination, cancellation, or alleged breach of the **Contract** prior to or during the pendency of any proceedings pursuant to this Article 27 shall not affect or impair the ability of the **Commissioner** or Contract Dispute Resolution Board to make a binding and final decision pursuant to this Article 27.

ARTICLE 28. RECORD KEEPING FOR EXTRA OR DISPUTED WORK OR WORK ON A TIME & MATERIALS BASIS

28.1 While the **Contractor** or any of its **Subcontractors** is performing **Work** on a time and material basis or **Extra Work** on a time and material basis ordered by the **Commissioner** under Article 25, or where the **Contractor** believes that it or any of its **Subcontractors** is performing **Extra Work** but a final determination by **Agency** has not been made, or the **Contractor** or any of its **Subcontractors** is performing disputed **Work** (whether on or off the **Site**), or complying with a determination or order under protest in accordance with Articles 11, 27, and 30, in each such case the **Contractor** shall furnish the **Resident Engineer** daily with three (3) copies of written statements signed by the **Contractor's** representative at the **Site** showing:

28.1.1 The name, trade, and number of each worker employed on such **Work** or engaged in complying with such determination or order, the number of hours employed, and the character of the **Work** each is doing; and

28.1.2 The nature and quantity of any materials, plant and equipment furnished or used in connection with the performance of such **Work** or compliance with such determination or order, and from whom purchased or rented.

28.2 A copy of such statement will be countersigned by the **Resident Engineer**, noting thereon any items not agreed to or questioned, and will be returned to the **Contractor** within two (2) **Days** after submission.

28.3 The **Contractor** and its **Subcontractors**, when required by the **Commissioner**, or the **Comptroller**, shall also produce for inspection, at the office of the **Contractor** or **Subcontractor**, any and all of its books, bid documents, financial statements, vouchers, records, daily job diaries and reports, and cancelled checks, and any other documents relating to showing the nature and quantity of the labor, materials, plant and equipment actually used in the performance of such **Work**, or in complying with such determination or order, and the amounts expended therefor, and shall permit the **Commissioner** and the **Comptroller** to make such extracts therefrom, or copies thereof, as they or either of them may desire.

28.4 In connection with the examination provided for herein, the **Commissioner**, upon demand therefor, will produce for inspection by the **Contractor** such records as the **Agency** may have with

respect to such **Extra Work** or disputed **Work** performed under protest pursuant to order of the **Commissioner**, except those records and reports which may have been prepared for the purpose of determining the accuracy and validity of the **Contractor's** claim.

28.5 Failure to comply strictly with these requirements shall constitute a waiver of any claim for extra compensation or damages on account of the performance of such **Work** or compliance with such determination or order.

ARTICLE 29. OMITTED WORK

29.1 If any **Contract Work** in a lump sum **Contract**, or if any part of a lump sum item in a unit price, lump sum, or percentage-bid **Contract** is omitted by the **Commissioner** pursuant to Article 33, the **Contract** price, subject to audit by the EAO, shall be reduced by a pro rata portion of the lump sum bid amount based upon the percent of **Work** omitted subject to Article 29.4. For the purpose of determining the pro rata portion of the lump sum bid amount, the bid breakdown submitted in accordance with Article 41 shall be considered, but shall not be the determining factor.

29.2 If the whole of a lump sum item or units of any other item is so omitted by the **Commissioner** in a unit price, lump sum, or percentage-bid **Contract**, then no payment will be made therefor except as provided in Article 29.4.

29.3 For units that have been ordered but are only partially completed, the unit price shall be reduced by a pro rata portion of the unit price bid based upon the percentage of **Work** omitted subject to Article 29.4.

29.4 In the event the **Contractor**, with respect to any omitted **Work**, has purchased any non-cancelable material and/or equipment that is not capable of use except in the performance of this **Contract** and has been specifically fabricated for the sole purpose of this **Contract**, but not yet incorporated into the **Work**, the **Contractor** shall be paid for such material and/or equipment in accordance with Article 64.2.1(b); provided, however, such payment is contingent upon the **Contractor's** delivery of such material and/or equipment in acceptable condition to a location designated by the **City**.

29.5 The **Contractor** agrees to make no claim for damages or for loss of overhead and profit with regard to any omitted **Work**.

ARTICLE 30. NOTICE AND DOCUMENTATION OF COSTS AND DAMAGES; PRODUCTION OF FINANCIAL RECORDS

30.1 If the **Contractor** shall claim to be sustaining damages by reason of any act or omission of the **City** or its agents, it shall submit to the **Commissioner** within forty-five (45) **Days** from the time such damages are first incurred, and every thirty (30) **Days** thereafter for as long as such damages are incurred, verified statements of the details and the amounts of such damages, together with documentary evidence of such damages. The **Contractor** may submit any of the above statements within such additional time as may be granted by the **Commissioner** in writing upon written request therefor. Failure of the **Commissioner** to respond in writing to a written request for additional time within thirty (30) **Days** shall be deemed a denial of the request. On failure of the **Contractor** to strictly comply with the foregoing provisions, such claims shall be deemed waived and no right to recover on such claims shall exist. Damages that the **Contractor** may claim in any action or dispute resolution procedure arising under or by reason of this **Contract** shall not be different from or in excess of the statements and documentation made pursuant to this Article 30.

30.2 In addition to the foregoing statements, the **Contractor** shall, upon notice from the **Commissioner**, produce for examination at the **Contractor's** office, by the **Engineer**, **Architect** or **Project Manager**, all of its books of account, bills, invoices, payrolls, subcontracts, time books, daily reports, bank deposit books, bank statements, check books, and cancelled checks, showing all of its acts and transactions in connection with or relating to or arising by reason of this **Contract**, and submit itself and persons in its employment, for examination under oath by any person designated by the **Commissioner** or **Comptroller** to investigate claims made or disputes against the **City** under this **Contract**. At such examination, a duly authorized representative of the **Contractor** may be present.

30.3 In addition to the statements required under Article 28 and this Article 30, the **Contractor** and/or its **Subcontractor** shall, within thirty (30) **Days** upon notice from the **Commissioner** or **Comptroller**, produce for examination at the **Contractor's** and/or **Subcontractor's** office, by a representative of either the **Commissioner** or **Comptroller**, all of its books of account, bid documents, financial statements, accountant workpapers, bills, invoices, payrolls, subcontracts, time books, daily reports, bank deposit books, bank statements, check books, and cancelled checks, showing all of its acts and transactions in connection with or relating to or arising by reason of this **Contract**. Further, the **Contractor** and/or its **Subcontractor** shall submit any person in its employment, for examination under oath by any person designated by the **Commissioner** or **Comptroller** to investigate claims made or disputes against the **City** under this **Contract**. At such examination, a duly authorized representative of the **Contractor** may be present.

30.4 Unless the information and examination required under Article 30.3 is provided by the **Contractor** and/or its **Subcontractor** upon thirty (30) **Days'** notice from the **Commissioner** or **Comptroller**, or upon the **Commissioner's** or **Comptroller's** written authorization to extend the time to comply, the **City** shall be released from all claims arising under, relating to or by reason of this **Contract**, except for sums certified by the **Commissioner** to be due under the provisions of this **Contract**. It is further stipulated and agreed that no person has the power to waive any of the foregoing provisions and that in any action or dispute resolution procedure against the **City** to recover any sum in excess of the sums certified by the **Commissioner** to be due under or by reason of this **Contract**, the **Contractor** must allege in its complaint and prove, at trial or during such dispute resolution procedure, compliance with the provisions of this Article 30.

30.5 In addition, after the commencement of any action or dispute resolution procedure by the **Contractor** arising under or by reason of this **Contract**, the **City** shall have the right to require the **Contractor** to produce for examination under oath, up until the trial of the action or hearing before the Contract Dispute Resolution Board, the books and documents described in Article 30.3 and submit itself and all persons in its employ for examination under oath. If this Article 30 is not complied with as required, then the **Contractor** hereby consents to the dismissal of the action or dispute resolution procedure.

CHAPTER VII
POWERS OF THE RESIDENT ENGINEER, THE ENGINEER OR ARCHITECT AND THE COMMISSIONER

ARTICLE 31. THE RESIDENT ENGINEER

31.1 The **Resident Engineer** shall have the power to inspect, supervise, and control the performance of the **Work**, subject to review by the **Commissioner**. The **Resident Engineer** shall not, however, have the power to issue an **Extra Work** order, except as specifically designated in writing by the **Commissioner**.

ARTICLE 32. THE ENGINEER OR ARCHITECT OR PROJECT MANAGER

32.1 The **Engineer** or **Architect** or **Project Manager**, in addition to those matters elsewhere herein delegated to the **Engineer** and expressly made subject to his/her determination, direction or approval, shall have the power, subject to review by the **Commissioner**:

32.1.1 To determine the amount, quality, and location of the **Work** to be paid for hereunder; and

32.1.2 To determine all questions in relation to the **Work**, to interpret the **Contract Drawings, Specifications**, and **Addenda**, and to resolve all patent inconsistencies or ambiguities therein; and

32.1.3 To determine how the **Work** of this **Contract** shall be coordinated with **Work** of **Other Contractors** engaged simultaneously on this **Project**, including the power to suspend any part of the **Work**, but not the whole thereof; and

32.1.4 To make minor changes in the **Work** as he/she deems necessary, provided such changes do not result in a net change in the cost to the **City** or to the **Contractor** of the **Work** to be done under the **Contract**; and

32.1.5 To amplify the **Contract Drawings**, add explanatory information and furnish additional **Specifications** and drawings, consistent with this **Contract**.

32.2 The foregoing enumeration shall not imply any limitation upon the power of the **Engineer** or **Architect** or **Project Manager**, for it is the intent of this **Contract** that all of the **Work** shall generally be subject to his/her determination, direction, and approval, except where the determination, direction or approval of someone other than the **Engineer** or **Architect** or **Project Manager** is expressly called for herein.

32.3 The **Engineer** or **Architect** or **Project Manager** shall not, however, have the power to issue an **Extra Work** order, except as specifically designated in writing by the **Commissioner**.

ARTICLE 33. THE COMMISSIONER

33.1 The **Commissioner**, in addition to those matters elsewhere herein expressly made subject to his/her determination, direction or approval, shall have the power:

33.1.1 To review and make determinations on any and all questions in relation to this **Contract**
and its performance; and

33.1.2 To modify or change this **Contract** so as to require the performance of **Extra Work** (subject, however, to the limitations specified in Article 25) or the omission of **Contract Work**; and

33.1.3 To suspend the whole or any part of the **Work** whenever in his/her judgment such suspension is required:

33.1.3(a) In the interest of the **City** generally; or

33.1.3(b) To coordinate the **Work** of the various contractors engaged on this **Project** pursuant to the provisions of Article 12; or

33.1.3(c) To expedite the completion of the entire **Project** even though the completion of this particular **Contract** may thereby be delayed.

ARTICLE 34. NO ESTOPPEL

34.1 Neither the **City** nor any **Agency**, official, agent or employee thereof, shall be bound, precluded or estopped by any determination, decision, approval, order, letter, payment or certificate made or given under or in connection with this **Contract** by the **City**, the **Commissioner**, the **Engineer**, the **Resident Engineer**, or any other official, agent or employee of the **City**, either before or after the final completion and acceptance of the **Work** and payment therefor:

34.1.1 From showing the true and correct classification, amount, quality or character of the **Work** actually done; or that any such determination, decision, order, letter, payment or certificate was untrue, incorrect or improperly made in any particular, or that the **Work**, or any part thereof, does not in fact conform to the requirements of this **Contract**; and

34.1.2 From demanding and recovering from the **Contractor** any overpayment made to it, or such damages as the **City** may sustain by reason of the **Contractor's** failure to perform each and every part of its **Contract**.

CHAPTER VIII
LABOR PROVISIONS

ARTICLE 35. EMPLOYEES

35.1 The **Contractor** and its **Subcontractors** shall not employ on the **Work**:

35.1.1 Anyone who is not competent, faithful and skilled in the **Work** for which he/she shall be employed; and whenever the **Commissioner** shall inform the **Contractor**, in writing, that any employee is, in his/her opinion, incompetent, unfaithful or disobedient, that employee shall be discharged from the **Work** forthwith, and shall not again be employed upon it; or

35.1.2 Any labor, materials or means whose employment, or utilization during the course of this **Contract**, may tend to or in any way cause or result in strikes, work stoppages, delays, suspension of **Work** or similar troubles by workers employed by the **Contractor** or its **Subcontractors**, or by any of the trades working in or about the buildings and premises where **Work** is being performed under this **Contract**, or by **Other Contractors** or their **Subcontractors** pursuant to other contracts, or on any other building or premises owned or operated by the **City**, its **Agencies**, departments, boards or authorities. Any violation by the **Contractor** of this requirement may, upon certification of the **Commissioner**, be considered as proper and sufficient cause for declaring the **Contractor** to be in default, and for the **City** to take action against it as set forth in Chapter X of this **Contract**, or such other article of this **Contract** as the **Commissioner** may deem proper; or

35.1.3 In accordance with Section 220.3-e of the Labor Law of the State of New York (hereinafter "Labor Law"), the **Contractor** and its **Subcontractors** shall not employ on the **Work** any apprentice, unless he/she is a registered individual, under a bona fide program

registered with the New York State Department of Labor. The allowable ratio of apprentices to journey-level workers in any craft classification shall not be greater than the ratio permitted to the **Contractor** as to its work force on any job under the registered program. Any employee listed on a payroll at an apprentice wage rate, who is not registered as above, shall be paid the wage rate determined by the **Comptroller** of the **City** for the classification of **Work** actually performed. The **Contractor** or **Subcontractor** will be required to furnish written evidence of the registration of its program and apprentices as well as all the appropriate ratios and wage rates, for the area of the construction prior to using any apprentices on the **Contract Work**.

35.2 If the total cost of the **Work** under this **Contract** is at least two hundred fifty thousand ($250,000) dollars, all laborers, workers, and mechanics employed in the performance of the **Contract** on the public work site, either by the **Contractor**, **Subcontractor** or other person doing or contracting to do the whole or a part of the **Work** contemplated by the **Contract**, shall be certified prior to performing any **Work** as having successfully completed a course in construction safety and health approved by the United States Department of Labor's Occupational Safety and Health Administration that is at least ten (10) hours in duration.

35.3 In accordance with Local Law Nos. 30-2012 and 33-2012, codified at sections 6-132 and 12-113 of the Administrative Code, respectively,

35.3.1 The **Contractor** shall not take an adverse personnel action with respect to an officer or employee in retaliation for such officer or employee making a report of information concerning conduct which such officer or employee knows or reasonably believes to involve corruption, criminal activity, conflict of interest, gross mismanagement or abuse of authority by any officer or employee relating to this **Contract** to (a) the Commissioner of the Department of Investigation, (b) a member of the New York City Council, the Public Advocate, or the **Comptroller**, or (c) the **CCPO**, **ACCO**, **Agency** head, or **Commissioner**.

35.3.2 If any of the **Contractor**'s officers or employees believes that he or she has been the subject of an adverse personnel action in violation of Article 35.3.1, he or she shall be entitled to bring a cause of action against the **Contractor** to recover all relief necessary to make him or her whole. Such relief may include but is not limited to: (a) an injunction to restrain continued retaliation, (b) reinstatement to the position such employee would have had but for the retaliation or to an equivalent position, (c) reinstatement of full fringe benefits and seniority rights, (d) payment of two times back pay, plus interest, and (e) compensation for any special damages sustained as a result of the retaliation, including litigation costs and reasonable attorney's fees.

35.3.3 The **Contractor** shall post a notice provided by the **City** in a prominent and accessible place on any site where work pursuant to the **Contract** is performed that contains information about:

35.3.3(a) how its employees can report to the New York City Department of Investigation allegations of fraud, false claims, criminality or corruption arising out of or in connection with the **Contract**; and

35.3.3(b) the rights and remedies afforded to its employees under Administrative Code sections 7-805 (the New York City False Claims Act) and 12-113 (the Whistleblower Protection Expansion Act) for lawful acts taken in connection with the reporting of allegations of fraud, false claims, criminality or corruption in connection with the **Contract**.

35.3.4 For the purposes of this Article 35.3, "adverse personnel action" includes dismissal, demotion, suspension, disciplinary action, negative performance evaluation, any action resulting in loss of staff, office space, equipment or other benefit, failure to appoint, failure to promote, or any transfer or assignment or failure to transfer or assign against the wishes of the affected officer or employee.

35.3.5 This Article 35.3 is applicable to all of the **Contractor**'s **Subcontractors** having subcontracts with a value in excess of $100,000; accordingly, the **Contractor** shall include this rider in all subcontracts with a value a value in excess of $100,000.

35.4 Article 35.3 is not applicable to this **Contract** if it is valued at $100,000 or less. Articles 35.3.1, 35.3.2, 35.3.4, and 35.3.5 are not applicable to this **Contract** if it was solicited pursuant to a finding of an emergency.

ARTICLE 36. NO DISCRIMINATION

36.1 The **Contractor** specifically agrees, as required by Labor Law Section 220-e, as amended, that:

36.1.1 In the hiring of employees for the performance of **Work** under this **Contract** or any subcontract hereunder, neither the **Contractor, Subcontractor,** nor any person acting on behalf of such **Contractor** or **Subcontractor**, shall by reason of race, creed, color or national origin discriminate against any citizen of the State of New York who is qualified and available to perform the **Work** to which the employment relates;

36.1.2 Neither the **Contractor, Subcontractor,** nor any person on its behalf shall, in any manner, discriminate against or intimidate any employee hired for the performance of **Work** under this **Contract** on account of race, creed, color or national origin;

36.1.3 There may be deducted from the amount payable to the **Contractor** by the **City** under this **Contract** a penalty of fifty ($50.00) dollars for each person for each **Day** during which such person was discriminated against or intimidated in violation of the provisions of this **Contract**; and

36.1.4 This **Contract** may be cancelled or terminated by the **City** and all moneys due or to become due hereunder may be forfeited, for a second or any subsequent violation of the terms or conditions of this Article 36.

36.1.5 This Article 36 covers all construction, alteration and repair of any public building or public work occurring in the State of New York and the manufacture, sale, and distribution of materials, equipment, and supplies to the extent that such operations are performed within the State of New York pursuant to this **Contract**.

36.2 The **Contractor** specifically agrees, as required by Section 6-108 of the Administrative Code, as amended, that:

36.2.1 It shall be unlawful for any person engaged in the construction, alteration or repair of buildings or engaged in the construction or repair of streets or highways pursuant to a **Contract** with the **City** or engaged in the manufacture, sale or distribution of materials, equipment or supplies pursuant to a **Contract** with the **City** to refuse to employ or to refuse to continue in any employment any person on account of the race, color or creed of such person.

36.2.2 It shall be unlawful for any person or any servant, agent or employee of any person, described in Article 36.1.2, to ask, indicate or transmit, orally or in writing, directly or indirectly, the race, color or creed or religious affiliation of any person employed or seeking employment from such person, firm or corporation.

36.2.3 Breach of the foregoing provisions shall be deemed a violation of a material provision of this **Contract**.

36.2.4 Any person, or the employee, manager or owner of or officer of such firm or corporation who shall violate any of the provisions of this Article 36.2 shall, upon conviction thereof, be punished by a fine of not more than one hundred ($100.00) dollars or by imprisonment for not more than thirty (30) **Days**, or both.

36.3 This **Contract** is subject to the requirements of Executive Order No. 50 (1980) ("E.O. 50"), as revised, and the rules and regulations promulgated thereunder. No contract will be awarded unless and until these requirements have been complied with in their entirety. By signing this **Contract**, the **Contractor** agrees that it:

36.3.1 Will not engage in any unlawful discrimination against any employee or applicant for employment because of race, creed, color, national origin, sex, age, disability, marital status or sexual orientation with respect to all employment decisions including, but not limited to, recruitment, hiring, upgrading, demotion, downgrading, transfer, training, rates of pay or other forms of compensation, layoff, termination, and all other terms and conditions of employment; and

36.3.2 Will not engage in any unlawful discrimination in the selection of **Subcontractors** on the basis of the owner's race, color, creed, national origin, sex, age, disability, marital status or sexual orientation; and

36.3.3 Will state in all solicitations or advertisements for employees placed by or on behalf of the **Contractor** that all qualified applicants will receive consideration for employment without unlawful discrimination based on race, creed, color, national origin, sex, age, citizens status, disability, marital status, sexual orientation, or that it is an equal employment opportunity employer; and

36.3.4 Will send to each labor organization or representative of workers with which it has a collective bargaining agreement or other contract or memorandum of understanding, written notification of its equal employment opportunity commitments under E.O. 50 and the rules and regulations promulgated thereunder; and

36.3.5 Will furnish, before the award of the **Contract**, all information and reports, including an employment report, that are required by E.O. 50, the rules and regulations promulgated thereunder, and orders of the **City** Department of Business Services, Division of Labor Services (**DLS**) and will permit access to its books, records, and accounts by the **DLS** for the purposes of investigation to ascertain compliance with such rules, regulations, and orders.

36.4 The **Contractor** understands that in the event of its noncompliance with the nondiscrimination clauses of this **Contract** or with any of such rules, regulations, or orders, such noncompliance shall constitute a material breach of this **Contract** and noncompliance with E.O. 50 and the rules and regulations promulgated thereunder. After a hearing held pursuant to the rules of the **DLS**, the Director of the **DLS** may direct the **Commissioner** to impose any or all of the following sanctions:

36.4.1 Disapproval of the **Contractor**; and/or

36.4.2 Suspension or termination of the **Contract**; and/or

36.4.3 Declaring the **Contractor** in default; and/or

36.4.4 In lieu of any of the foregoing sanctions, the Director of the **DLS** may impose an employment program.

In addition to any actions taken under this **Contract**, failure to comply with E.O. 50 and the rules and regulations promulgated thereunder, in one or more instances, may result in a **City Agency** declaring the **Contractor** to be non-responsible in future procurements. The **Contractor** further agrees that it will refrain from entering into any **Contract** or **Contract** modification subject to E.O. 50 and the rules and regulations promulgated thereunder with a **Subcontractor** who is not in compliance with the requirements of E.O. 50 and the rules and regulations promulgated thereunder.

36.5 The **Contractor** specifically agrees, as required by Section 6-123 of the Administrative Code, that:

36.5.1 The **Contractor** will not engage in any unlawful discriminatory practice in violation of Title 8 of the Administrative Code; and

36.5.2 Any failure to comply with this Article 36.5 may subject the **Contractor** to the remedies set forth in Section 6-123 of the Administrative Code, including, where appropriate, sanctions such as withholding of payment, imposition of an employment program, finding the **Contractor** to be in default, cancellation of the **Contract**, or any other sanction or remedy provided by **Law** or **Contract**.

ARTICLE 37. LABOR LAW REQUIREMENTS

37.1 The **Contractor** shall strictly comply with all applicable provisions of the Labor Law, as amended. Such compliance is a material term of this **Contract**.

37.2 The **Contractor** specifically agrees, as required by Labor Law Sections 220 and 220-d, as amended, that:

37.2.1 Hours of **Work**: No laborer, worker, or mechanic in the employ of the **Contractor**, **Subcontractor** or other person doing or contracting to do the whole or a part of the **Work** contemplated by this **Contract** shall be permitted or required to work more than eight (8) hours in any one (1) **Day**, or more than five (5) **Days** in any one (1) week, except as provided in the Labor Law and in cases of extraordinary emergency including fire, flood, or danger to life or property, or in the case of national emergency when so proclaimed by the President of the United States of America.

37.2.2 In situations in which there are not sufficient laborers, workers, and mechanics who may be employed to carry on expeditiously the **Work** contemplated by this **Contract** as a result of such restrictions upon the number of hours and **Days** of labor, and the immediate commencement or prosecution or completion without undue delay of the **Work** is necessary for the preservation of the **Site** and/or for the protection of the life and limb of the persons using the same, such laborers, workers, and mechanics shall be permitted or required to

work more than eight (8) hours in any one (1) **Day**; or five (5) **Days** in any one (1) week; provided, however, that upon application of any **Contractor**, the **Commissioner** shall have first certified to the Commissioner of Labor of the State of New York (hereinafter "Commissioner of Labor") that such public **Work** is of an important nature and that a delay in carrying it to completion would result in serious disadvantage to the public; and provided, further, that such Commissioner of Labor shall have determined that such an emergency does in fact exist as provided in Labor Law Section 220.2.

37.2.3 Failure of the **Commissioner** to make such a certification to the Commissioner of Labor shall not entitle the **Contractor** to damages for delay or for any cause whatsoever.

37.2.4 Prevailing Rate of Wages: The wages to be paid for a legal day's **Work** to laborers, workers, or mechanics employed upon the **Work** contemplated by this **Contract** or upon any materials to be used thereon shall not be less than the "prevailing rate of wage" as defined in Labor Law Section 220, and as fixed by the **Comptroller** in the attached Schedule of Wage Rates and in updated schedules thereof. The prevailing wage rates and supplemental benefits to be paid are those in effect at the time the **Work** is being performed.

37.2.5 Requests for interpretation or correction in the Information for Bidders includes all requests for clarification of the classification of trades to be employed in the performance of the **Work** under this **Contract**. In the event that a trade not listed in the **Contract** is in fact employed during the performance of this **Contract**, the **Contractor** shall be required to obtain from the **Agency** the prevailing wage rates and supplementary benefits for the trades used and to complete the performance of this **Contract** at the price at which the **Contract** was awarded.

37.2.6 Minimum Wages: Except for employees whose wage is required to be fixed pursuant to Labor Law Section 220, all persons employed by the **Contractor** and any **Subcontractor** in the manufacture or furnishing of the supplies, materials, or equipment, or the furnishing of work, labor, or services, used in the performance of this **Contract**, shall be paid, without subsequent deduction or rebate unless expressly authorized by **Law**, not less than the sum mandated by **Law**.

37.3 Working Conditions: No part of the **Work**, labor or services shall be performed or rendered by the **Contractor** in any plants, factories, buildings or surroundings or under working conditions which are unsanitary or hazardous or dangerous to the health and safety of employees engaged in the performance of this **Contract**. Compliance with the safety, sanitary, and factory inspection **Laws** of the state in which the **Work** is to be performed shall be prima facie evidence of compliance with this Article 37.3.

37.4 Prevailing Wage Enforcement: The **Contractor** agrees to pay for all costs incurred by the **City** in enforcing prevailing wage requirements, including the cost of any investigation conducted by or on behalf of the **Agency** or the **Comptroller,** where the **City** discovers a failure to comply with any of the requirements of this Article 37 by the **Contractor** or its **Subcontractor(s)**. The **Contractor** also agrees that, should it fail or refuse to pay for any such investigation, the **Agency** is hereby authorized to deduct from a **Contractor's** account an amount equal to the cost of such investigation.

37.4.1 The Labor Law Section 220 and Section 220-d, as amended, provide that this **Contract** shall be forfeited and no sum paid for any **Work** done hereunder on a second conviction for willfully paying less than:

37.4.1(a) The stipulated prevailing wage scale as provided in Labor Law section 220, as amended, or

37.4.1(b) The stipulated minimum hourly wage scale as provided in Labor Law section 220-d, as amended.

37.4.2 For any breach or violation of either working conditions (Article 37.3) or minimum wages (Article 37.2.6) provisions, the party responsible therefor shall be liable to the **City** for liquidated damages, which may be withheld from any amounts due on any contracts with the **City** of such party responsible, or may be recovered in actions brought by the **City** Corporation Counsel in the name of the **City**, in addition to damages for any other breach of this **Contract**, for a sum equal to the amount of any underpayment of wages due to any employee engaged in the performance of this **Contract**. In addition, the **Commissioner** shall have the right to cancel contracts and enter into other contracts for the completion of the original contract, with or without public letting, and the original **Contractor** shall be liable for any additional cost. All sums withheld or recovered as deductions, rebates, refunds, or underpayment of wages hereunder, shall be held in a special deposit account and shall be paid without interest, on order of the **Comptroller**, directly to the employees who have been paid less than minimum rates of pay as set forth herein and on whose account such sums were withheld or recovered, provided that no claims by employees for such payments shall be entertained unless made within two (2) years from the date of actual notice to the **Contractor** of the withholding or recovery of such sums by the **City**.

37.4.3 A determination by the **Comptroller** that a **Contractor** and/or its **Subcontractor** willfully violated Labor Law Section 220 will be forwarded to the **City's** five District Attorneys for review.

37.4.4 The **Contractor's** or **Subcontractor's** noncompliance with this Article 37.4 and Labor Law Section 220 may result in an unsatisfactory performance evaluation and the **Comptroller** may also find and determine that the **Contractor** or **Subcontractor** willfully violated the New York Labor **Law**.

37.4.4(a) An unsatisfactory performance evaluation for noncompliance with this Article 37.4 may result in a determination that the **Contractor** is a non-responsible bidder on subsequent procurements with the **City** and thus a rejection of a future award of a contract with the **City**, as well as any other sanctions provided for by **Law**.

37.4.4(b) Labor Law Section 220-b, as amended, provides that when two (2) final determinations have been rendered against a **Contractor** or **Subcontractor** within any consecutive six (6) year period determining that such **Contractor** or **Subcontractor** has willfully failed to pay the prevailing rate of wages or to provide supplements in accordance with the Labor Law and this Article 37.4, whether such failures were concurrent or consecutive and whether or not such final determinations concerning separate public works projects are rendered simultaneously, such **Contractor** or **Subcontractor** shall be ineligible to submit a bid on or be awarded any public works contract with the **City** for a period of five (5) years from the second final determination. If the final determination involves the falsification of payroll records or the kickback of wages or supplements, the **Contractor** or **Subcontractor** shall be ineligible to submit a bid on or be awarded any public works contract with the **City** for a period of five (5) years from the first final determination.

37.4.4(c) Labor Law Section 220, as amended, provides that the **Contractor** or **Subcontractor** found to have violated this Article 37.4 may be directed to make payment of wages or supplements including interest found to be due, and the **Contractor** or **Subcontractor** may be directed to make payment of a further sum as

a civil penalty in an amount not exceeding twenty-five (25%) percent of the total amount found to be due.

37.5 The **Contractor** and its **Subcontractors** shall within ten (10) **Days** after mailing of a Notice of Award or written order, post in prominent and conspicuous places in each and every plant, factory, building, and structure where employees of the **Contractor** and its **Subcontractors** engaged in the performance of this **Contract** are employed, notices furnished by the **City**, in relation to prevailing wages and supplements, minimum wages, and other stipulations contained in Sections 220 and 220-h of the Labor Law, and the **Contractor** and its **Subcontractors** shall continue to keep such notices posted in such prominent and conspicuous places until **Final Acceptance** of the supplies, materials, equipment, or **Work**, labor, or services required to be furnished or rendered under this **Contract**.

37.6 The **Contractor** shall strictly comply with all of the provisions of Articles 37.6.1 through 37.6.5, and provide for all workers, laborers or mechanics in its employ, the following:

37.6.1 Notices Posted At **Site**: Post, in a location designated by the **City**, schedules of prevailing wages and supplements for this **Project**, a copy of all re-determinations of such schedules for the **Project**, the Workers' Compensation **Law** Section 51 notice, all other notices required by **Law** to be posted at the **Site**, the **City** notice that this **Project** is a public works project on which each worker is entitled to receive the prevailing wages and supplements for the occupation at which he or she is working, and all other notices which the **City** directs the **Contractor** to post. The **Contractor** shall provide a surface for such notices which is satisfactory to the **City**. The **Contractor** shall maintain and keep current such notices in a legible manner and shall replace any notice or schedule which is damaged, defaced, illegible or removed for any reason. The **Contractor** shall post such notices before commencing any **Work** on the **Site** and shall maintain such notices until all **Work** on the **Site** is complete; and

37.6.2 Daily **Site** Sign-in Sheets: Maintain daily **Site** sign-in sheets, and require that **Subcontractors** maintain daily **Site** sign-in sheets for its employees, which include blank spaces for an employee's name to be both printed and signed, job title, date started and Social Security number, the time the employee began work and the time the employee left work, until **Final Acceptance** of the supplies, materials, equipment, or **Work**, labor, or services to be furnished or rendered under this **Contract** unless exception is granted by the **Comptroller** upon application by the **Agency**. In the alternative, subject to the approval of the **CCPO**, the **Contractor** and **Subcontractor** may maintain an electronic or biometric sign-in system, which provides the information required by this Article 37.6.2; and

37.6.3 Individual Employee Information Notices: Distribute a notice to each worker, laborer or mechanic employed under this **Contract**, in a form provided by the **Agency**, that this **Project** is a public works project on which each worker, laborer or mechanic is entitled to receive the prevailing rate of wages and supplements for the occupation at which he or she is working. If the total cost of the **Work** under this **Contract** is at least two hundred fifty thousand ($250,000) dollars, such notice shall also include a statement that each worker, laborer or mechanic must be certified prior to performing any **Work** as having successfully completed a course in construction safety and health approved by the United States Department of Labor's Occupational Safety and Health Administration that is at least ten (10) hours in duration. Such notice shall be distributed to each worker before he or she starts performing any **Work** of this **Contract** and with the first paycheck after July first of each year. "Worker, laborer or mechanic" includes employees of the **Contractor** and all **Subcontractors** and all employees of suppliers entering the **Site**. At the time of distribution, the **Contractor** shall have each worker, laborer or mechanic sign a statement, in a form provided by the **Agency**, certifying that the worker has received the notice required by this

Article 37.6.3, which signed statement shall be maintained with the payroll records required by this **Contract**; and

37.6.3(a) The **Contractor** and each **Subcontractor** shall notify each worker, laborer or mechanic employed under this **Contract** in writing of the prevailing rate of wages for their particular job classification. Such notification shall be given to every worker, laborer, and mechanic on their first pay stub and with every pay stub thereafter; and

37.6.4 **Site** Laminated Identification Badges: The **Contractor** shall provide laminated identification badges which include a photograph of the worker's, laborer's or mechanic's face and indicate the worker's, laborer's or mechanic's name, trade, employer's name, and employment starting date (month/day/year). Further, the **Contractor** shall require as a condition of employment on the **Site**, that each and every worker, laborer or mechanic wear the laminated identification badge at all times and that it may be seen by any representative of the **City**. The **Commissioner** may grant a written waiver from the requirement that the laminated identification badge include a photograph if the **Contractor** demonstrates that the identity of an individual wearing a laminated identification badge can be easily verified by another method; and

37.6.5 Language Other Than English Used On **Site**: Provide the **ACCO** notice when three (3) or more employees (worker and/or laborer and/or mechanic) on the **Site**, at any time, speak a language other than English. The **ACCO** will then provide the **Contractor** the notices described in Article 37.6.1 in that language or languages as may be required. The **Contractor** is responsible for all distributions under this Article 37; and

37.6.6 Provision of Records: The **Contractor** and **Subcontractor(s)** shall produce within five (5) **Days** on the **Site** of the **Work** and upon a written order of the **Engineer**, the **Commissioner**, the **ACCO**, the **Agency EAO**, or the **Comptroller,** such records as are required to be kept by this Article 37.6; and

37.6.7 The **Contractor** and **Subcontractor(s)** shall pay employees by check or direct deposit. If this **Contract** is for an amount greater than one million ($1,000,000) dollars, checks issued by the **Contractor** to covered employees shall be generated by a payroll service or automated payroll system (an in-house system may be used if approved by the **Agency**). For any subcontract for an amount greater than seven hundred fifty thousand ($750,000) dollars, checks issued by a **Subcontractor** to covered employees shall be generated by a payroll service or automated payroll system (an in-house system may be used if approved by the **Agency**); and

37.6.8 The failure of the **Contractor** or **Subcontractor(s)** to comply with the provisions of Articles 37.6.1 through 37.6.7 may result in the **Commissioner** declaring the **Contractor** in default and/or the withholding of payments otherwise due under the **Contract**.

37.7 The **Contractor** and its **Subcontractors** shall keep such employment and payroll records as are required by Section 220 of the Labor Law. The failure of the **Contractor** or **Subcontractor(s)** to comply with the provisions of this Article 37.7 may result in the **Commissioner** declaring the **Contractor** in default and/or the withholding of payments otherwise due under the **Contract.**

37.8 At the time the **Contractor** makes application for each partial payment and for final payment, the **Contractor** shall submit to the **Commissioner** a written payroll certification, in the form provided by this **Contract**, of compliance with the prevailing wage, minimum wage, and other provisions and stipulations required by Labor Law Section 220 and of compliance with the training requirements of

Labor Law Section 220-h set forth in Article 35.2. This certification of compliance shall be a condition precedent to payment and no payment shall be made to the **Contractor** unless and until each such certification shall have been submitted to and received by the **Commissioner.**

37.9 This **Contract** is executed by the **Contractor** with the express warranty and representation that the **Contractor** is not disqualified under the provisions of Section 220 of the Labor Law from the award of the **Contract.**

37.10 Any breach or violation of any of the foregoing shall be deemed a breach or violation of a material provision of this **Contract**, and grounds for cancellation thereof by the **City.**

ARTICLE 38. PAYROLL REPORTS

38.1 The **Contractor** and its **Subcontractor(s)** shall maintain on the **Site** during the performance of the **Work** the original payrolls or transcripts thereof which the **Contractor** and its **Subcontractor(s)** are required to maintain and shall submit such original payrolls or transcripts, subscribed and affirmed by it as true, within thirty (30) **Days** after issuance of its first payroll, and every thirty (30) **Days** thereafter, pursuant to Labor Law Section 220(3-a)(a)(iii). The **Contractor** and **Subcontractor(s)** shall submit such original payrolls or transcripts along with each and every payment requisition. If payment requisitions are not submitted at least once a month, the **Contractor** and its **Subcontractor(s)** shall submit original payrolls and transcripts both along with its payment requisitions and independently of its payment requisitions.

38.2 The **Contractor** shall maintain payrolls or transcripts thereof for six (6) years from the date of completion of the **Work** on this **Contract**. If such payrolls and transcripts are maintained outside of New York City after the completion of the **Work** and their production is required pursuant to this Article 38, the **Contractor** shall produce such records in New York City upon request by the City.

38.3 The **Contractor** and **Subcontractor(s)** shall comply with any written order, direction, or request made by the **Engineer**, the **Commissioner**, the **ACCO**, the **Agency EAO**, the **Agency Labor Law Investigator(s)**, or the **Comptroller**, to provide to the requesting party any of the following information and/or records within five (5) **Days** of such written order, direction, or request:

38.3.1 Such original payrolls or transcripts thereof subscribed and affirmed by it as true and the statements signed by each worker pursuant to this Chapter VIII; and/or

38.3.2 Attendance sheets for each **Day** on which any employee of the **Contractor** and/or any of the **Subcontractor(s)** performed **Work** on the **Site**, which attendance sheet shall be in a form acceptable to the **Agency** and shall provide information acceptable to the **Agency** to identify each such employee; and/or

38.3.3 Any other information to satisfy the **Engineer**, the **Commissioner**, the **ACCO**, the **Agency EAO**, the **Agency Labor Law Investigator(s)** or the **Comptroller**, that this Chapter VIII and the Labor Law, as to the hours of employment and prevailing rates of wages and/or supplemental benefits, are being observed.

38.4 The failure of the **Contractor** or **Subcontractor(s)** to comply with the provisions of Articles 38.1 and/or 38.2 may result in the **Commissioner** declaring the **Contractor** in default and/or the withholding of payments otherwise due under the **Contract.**

ARTICLE 39. DUST HAZARDS

39.1 Should a harmful dust hazard be created in performing the **Work** of this **Contract**, for the elimination of which appliances or methods have been approved by the Board of Standards and Appeals of the City of New York, such appliances and methods shall be installed, maintained, and effectively operated during the continuance of such harmful dust hazard. Failure to comply with this provision after notice shall make this **Contract** voidable at the sole discretion of the **City**.

CHAPTER IX
PARTIAL AND FINAL PAYMENTS

ARTICLE 40. CONTRACT PRICE

40.1 The **City** shall pay, and the **Contractor** agrees to accept, in full consideration for the **Contractor's** performance of the **Work** subject to the terms and conditions hereof, the lump sum price or unit prices for which this **Contract** was awarded, plus the amount required to be paid for any **Extra Work** ordered by the **Commissioner** under Article 25, less credit for any **Work** omitted pursuant to Article 29.

ARTICLE 41. BID BREAKDOWN ON LUMP SUM

41.1 Within fifteen (15) **Days** after the commencement date specified in the **Notice to Proceed** or **Order to Work**, unless otherwise directed by the **Resident Engineer**, the **Contractor** shall submit to the **Resident Engineer** a breakdown of its bid price, or of lump sums bid for items of the **Contract**, showing the various operations to be performed under the **Contract**, as directed in the progress schedule required under Article 9, and the value of each of such operations, the total of such items to equal the lump sum price bid. Said breakdown must be approved in writing by the **Resident Engineer**.

41.2 No partial payment will be approved until the **Contractor** submits a bid breakdown that is acceptable to the **Resident Engineer**.

41.3 The **Contractor** shall also submit such other information relating to the bid breakdown as directed by the **Resident Engineer**. Thereafter, the breakdown may be used only for checking the **Contractor's** applications for partial payments hereunder, but shall not be binding upon the **City**, the **Commissioner**, or the **Engineer** for any purpose whatsoever.

ARTICLE 42. PARTIAL PAYMENTS

42.1 From time to time as the **Work** progresses satisfactorily, but not more often than once each calendar month (except where the **Commissioner** approves in writing the submission of invoices on a more frequent basis and for invoices relating to **Work** performed pursuant to a change order), the **Contractor** may submit to the **Engineer** a requisition for a partial payment in the prescribed form, which shall contain an estimate of the quantity and the fair value of the **Work** done during the payment period.

42.2 Partial payments may be made for materials, fixtures, and equipment in advance of their actual incorporation in the **Work**, as the **Commissioner** may approve, and upon the terms and conditions set forth in the General Conditions.

42.3 The **Contractor** shall also submit to the **Commissioner** in connection with every application for partial payment a verified statement in the form prescribed by the **Comptroller** setting forth the information required under Labor Law Section 220-a.

42.4 Within thirty (30) **Days** after receipt of a satisfactory payment application, and within sixty (60) **Days** after receipt of a satisfactory payment application in relation to **Work** performed pursuant to a change order, the **Engineer** will prepare and certify, and the **Commissioner** will approve, a voucher for a partial payment in the amount of such approved estimate, less any and all deductions authorized to be made by the **Commissioner** under the terms of this **Contract** or by **Law**.

ARTICLE 43. PROMPT PAYMENT

43.1 The Prompt Payment provisions of the **PPB** Rules in effect at the time of the bid will be applicable to payments made under this **Contract.** The provisions require the payment to the **Contractor** of interest on payments made after the required payment date, except as set forth in the **PPB** Rules.

43.2 The **Contractor** shall submit a proper invoice to receive payment, except where the **Contract** provides that the **Contractor** will be paid at predetermined intervals without having to submit an invoice for each scheduled payment.

43.3 Determination of interest due will be made in accordance with the **PPB** Rules.

43.4 If the **Contractor** is paid interest, the proportionate share(s) of that interest shall be forwarded by the **Contractor** to its **Subcontractor(s).**

43.5 The **Contractor** shall pay each **Subcontractor** or **Materialman** not later than seven (7) **Days** after receipt of payment out of amounts paid to the **Contractor** by the **City** for **Work** performed by the **Subcontractor** or **Materialman** under this **Contract.**

> 43.5.1 If **Contractor** fails to make any payment to any **Subcontractor** or **Materialman** within seven (7) **Days** after receipt of payment by the **City** pursuant to this Article 43.5, then the **Contractor** shall pay interest on amounts due to such **Subcontractor** or **Materialman** at the rate of interest in effect on the date such payment is made by the **Contractor** computed in accordance with Section 756-b (1)(b) of the New York General Business Law. Accrual of interest shall commence on the **Day** immediately following the expiration of the seventh **Day** following receipt of payment by the **Contractor** from the **City** and shall end on the date on which payment is made.

43.6 The **Contractor** shall include in each of its subcontracts a provision requiring each **Subcontractor** to make payment to each of its **Subcontractors** or **Materialmen** for **Work** performed under this **Contract** in the same manner and within the same time period set forth above.

ARTICLE 44. SUBSTANTIAL COMPLETION PAYMENT

44.1 The **Contractor** shall submit with the **Substantial Completion** requisition:

> 44.1.1 A final verified statement of any pending Article 27 disputes in accordance with the **PPB** Rules and this **Contract** and any and all alleged claims against the **City**, in any way connected with or arising out of this **Contract** (including those as to which details may have been furnished pursuant to Articles 11, 27, 28, and 30) setting forth with respect to each

such claim the total amount thereof, the various items of labor and materials included therein, and the alleged value of each item; and if the alleged claim be one for delay, the alleged cause of each such delay, the period or periods of time, giving the dates when the **Contractor** claims the performance of the **Work** or a particular part thereof was delayed, and an itemized statement and breakdown of the amount claimed for each such delay.

44.1.1(a) With respect to each such claim, the **Commissioner**, the **Comptroller** and, in the event of litigation, the **City** Corporation Counsel shall have the same right to inspect, and to make extracts or copies of, the **Contractor's** books, vouchers, records, etc., as is referred to in Articles 11, 27, 28, and 30. Nothing contained in this Article 44.1.1(a) is intended to or shall relieve the **Contractor** from the obligation of complying strictly with Articles 11, 27, 28, and 30. The **Contractor** is warned that unless such claims are completely set forth as herein required, the **Contractor** upon acceptance of the **Substantial Completion** payment pursuant to this Article 44, will have waived any such claims.

44.1.2 A **Final Approved Punch List**.

44.1.3 Where required, a request for an extension of time to achieve **Substantial Completion** or final extension of time.

44.2 The **Commissioner** shall issue a voucher calling for payment of any part or all of the balance due for **Work** performed under the **Contract**, including monies retained under Article 21, less any and all deductions authorized to be made by the **Commissioner**, under this **Contract** or by **Law**, and less twice the amount the **Commissioner** considers necessary to ensure the completion of the balance of the **Work** by the **Contractor**. Such a payment shall be considered a partial and not a final payment. No **Substantial Completion** payment shall be made under this Article 44 where the **Contractor** failed to complete the **Work** within the time fixed for such completion in the Schedule A of the General Conditions, or within the time to which completion may have been extended, until an extension or extensions of time for the completion of **Work** have been acted upon pursuant to Article 13.

44.3 No further partial payments shall be made to the **Contractor** after **Substantial Completion**, except the **Substantial Completion** payment and payment pursuant to any **Contractor's** requisition that were properly filed with the **Commissioner** prior to the date of **Substantial Completion**; however, the **Commissioner** may grant a waiver for further partial payments after the date of **Substantial Completion** to permit payments for change order **Work** and/or release of retainage and deposits pursuant to Articles 21 and 24. Such waiver shall be in writing.

44.4 The **Contractor** acknowledges that nothing contained in this Article 44 is intended to or shall in any way diminish the force and effect of Article 13.

ARTICLE 45. FINAL PAYMENT

45.1 After completion and **Final Acceptance** of the **Work**, the **Contractor** shall submit all required certificates and documents, together with a requisition for the balance claimed to be due under the **Contract**, less the amount authorized to be retained for maintenance under Article 24. Such submission shall be within 90 days of the date of the **Commissioner's** written determination of **Final Acceptance**, or within such additional time as may be granted by the **Commissioner** in writing. If the **Contractor** fails to submit all required certificates and documents within the time allowed, no payment of the balance claimed shall be made to the **Contractor** and the **Contractor** shall be deemed to have forfeited its right to

payment of any balance claimed. A verified statement similar to that required in connection with applications for partial payments shall also be submitted to the **Commissioner**.

45.2 Amended Verified Statement of Claims: The **Contractor** shall also submit with the final requisition any amendments to the final verified statement of any pending dispute resolution procedures in accordance with the **PPB** Rules and this **Contract** and any and all alleged claims against the **City**, in any way connected with or arising out of this **Contract** (including those as to which details may have been furnished pursuant to Articles 11, 27, 28, and 30) that have occurred subsequent to **Substantial Completion**, setting forth with respect to each such claim the total amount thereof, the various items of labor and materials included therein, and the alleged value of each such item; and if the alleged claim be one for delay, the alleged cause of each such delay, the period or periods of time, giving the dates when the **Contractor** claims the performance of the **Work** or a particular part thereof was delayed, and an itemized statement and breakdown of the amount claimed for each such delay. With reference to each such claim, the **Commissioner**, the **Comptroller** and, in the event of litigation, the **City** Corporation Counsel shall have the same right to inspect, and to make extracts or copies of, the **Contractor's** books, vouchers, records, etc., as is referred to in Articles 11, 27, 28, and 30. Nothing contained in this Article 45.2, is intended to or shall relieve the **Contractor** from the obligation of complying strictly with Articles 11, 27, 28, and 30. The **Contractor** is warned that unless such claims are completely set forth as herein required, the **Contractor**, upon acceptance of the Final Payment pursuant to Article 46, will have waived any such claims.

45.3 Preparation of Final Voucher: Upon determining the balance due hereunder other than on account of claims, the **Engineer** will prepare and certify, for the Commissioner's approval, a voucher for final payment in that amount less any and all deductions authorized to be made by the **Commissioner** under this **Contract** or by **Law**. In the case of a lump sum **Contract**, the **Commissioner** shall certify the voucher for final payment within thirty (30) **Days** from the date of completion and acceptance of the **Work**, provided all requests for extensions of time have been acted upon.

45.3.1 All prior certificates and vouchers upon which partial payments were made, being merely estimates made to enable the **Contractor** to prosecute the **Work** more advantageously, shall be subject to correction in the final voucher, and the certification of the **Engineer** thereon and the approval of the **Commissioner** thereof, shall be conditions precedent to the right of the **Contractor** to receive any money hereunder. Such final voucher shall be binding and conclusive upon the **Contractor**.

45.3.2 Payment pursuant to such final voucher, less any deductions authorized to be made by the **Commissioner** under this **Contract** or by **Law**, shall constitute the final payment, and shall be made by the **Comptroller** within thirty (30) **Days** after the filing of such voucher in his/her office.

45.4 The **Contractor** acknowledges that nothing contained in this Article 45 is intended to or shall in any way diminish the force and effect of Article 13.

ARTICLE 46. ACCEPTANCE OF FINAL PAYMENT

46.1 The acceptance by the **Contractor**, or by anyone claiming by or through it, of the final payment, whether such payment be made pursuant to any judgment of any court, or otherwise, shall constitute and operate as a release of the **City** from any and all claims of and liability to the **Contractor** for anything heretofore done or furnished for the **Contractor** relating to or arising out of this **Contract** and the **Work** done hereunder, and for any prior act, neglect or default on the part of the **City** or any of its officials, agents or employees, excepting only a claim against the **City** for the amounts deducted or retained in accordance with the terms and provisions of this **Contract** or by **Law**, and excepting any

claims, not otherwise waived, or any pending dispute resolution procedures which are contained in the verified statement filed with the **Contractor's** substantial and final requisitions pursuant to Articles 44 and 45.

46.2 The **Contractor** is warned that the execution by it of a release, in connection with the acceptance of the final payment, containing language purporting to reserve claims other than those herein specifically excepted from the operation of this Article 46, or those for amounts deducted by the **Commissioner** from the final requisition or from the final payment as certified by the **Engineer** and approved by the **Commissioner**, shall not be effective to reserve such claims, anything stated to the **Contractor** orally or in writing by any official, agent or employee of the **City** to the contrary notwithstanding.

46.3 Should the **Contractor** refuse to accept the final payment as tendered by the **Comptroller**, it shall constitute a waiver of any right to interest thereon.

46.4 The **Contractor**, however, shall not be barred by this Article 46 from commencing an action for breach of **Contract** to the extent permitted by **Law** and by the terms of the **Contract** for any claims that are contained in the verified statement filed with the **Contractor's** substantial and final requisitions pursuant to Articles 44 and 45 or that arose after submission of the final payment requisition, provided that a detailed and verified statement of claim is served upon the contracting **Agency** and **Comptroller** not later than forty (40) **Days** after the making of such final payment by electronic funds transfer (EFT) or the mailing of such final payment. The statement shall specify the items upon which the claim will be based and any such claim shall be limited to such items.

ARTICLE 47. APPROVAL BY PUBLIC DESIGN COMMISSION

47.1 All works of art, including paintings, mural decorations, stained glass, statues, bas-reliefs, and other sculptures, monuments, fountains, arches, and other structures of a permanent character intended for ornament or commemoration, and every design of the same to be used in the performance of this **Contract**, and the design of all bridges, approaches, buildings, gates, fences, lamps, or structures to be erected, pursuant to the terms of this **Contract**, shall be submitted to the Art Commission, d/b/a the Public Design Commission of the City of New York, and shall be approved by the Public Design Commission prior to the erection or placing in position of the same. The final payment shall not become due or payable under this **Contract** unless and until the Public Design Commission shall certify that the design for the **Work** herein contracted for has been approved by the said Public Design Commission, and that the same has been executed in substantial accordance with the design so approved, pursuant to the provisions of Chapter 37, Section 854 of the **City** Charter, as amended.

CHAPTER X
CONTRACTOR'S DEFAULT

ARTICLE 48. COMMISSIONER'S RIGHT TO DECLARE CONTRACTOR IN DEFAULT

48.1 In addition to those instances specifically referred to in other Articles herein, the **Commissioner** shall have the right to declare the **Contractor** in default of this **Contract** if:

48.1.1 The **Contractor** fails to commence **Work** when notified to do so by the **Commissioner**; or
if

48.1.2 The **Contractor** shall abandon the **Work**; or if

48.1.3 The **Contractor** shall refuse to proceed with the **Work** when and as directed by the **Commissioner**; or if

48.1.4 The **Contractor** shall, without just cause, reduce its working force to a number which, if maintained, would be insufficient, in the opinion of the **Commissioner**, to complete the **Work** in accordance with the progress schedule; or if

48.1.5 The **Contractor** shall fail or refuse to increase sufficiently such working force when ordered to do so by the **Commissioner**; or if

48.1.6 The **Contractor** shall sublet, assign, transfer, convert or otherwise dispose of this **Contract** other than as herein specified; or sell or assign a majority interest in the **Contractor**; or if

48.1.7 The **Contractor** fails to secure and maintain all required insurance; or if

48.1.8 A receiver or receivers are appointed to take charge of the **Contractor's** property or affairs; or if

48.1.9 The **Commissioner** shall be of the opinion that the **Contractor** is or has been unnecessarily or unreasonably or willfully delaying the performance and completion of the **Work**, or the award of necessary subcontracts, or the placing of necessary material and equipment orders; or if

48.1.10 The **Commissioner** shall be of the opinion that the **Contractor** is or has been willfully or in bad faith violating any of the provisions of this **Contract**; or if

48.1.11 The **Commissioner** shall be of the opinion that the **Work** cannot be completed within the time herein provided therefor or within the time to which such completion may have been extended; provided, however, that the impossibility of timely completion is, in the **Commissioner's** opinion, attributable to conditions within the **Contractor's** control; or if

48.1.12 The **Work** is not completed within the time herein provided therefor or within the time to which the **Contractor** may be entitled to have such completion extended; or if

48.1.13 Any statement or representation of the **Contractor** in the **Contract** or in any document submitted by the **Contractor** with respect to the **Work**, the **Project**, or the **Contract** (or for purposes of securing the **Contract**) was untrue or incorrect when made; or if

48.1.14 The **Contractor** or any of its officers, directors, partners, five (5%) percent shareholders, principals, or other persons substantially involved in its activities, commits any of the acts or omissions specified as the grounds for debarment in the **PPB** Rules.

48.2 Before the **Commissioner** shall exercise his/her right to declare the **Contractor** in default, the **Commissioner** shall give the **Contractor** an opportunity to be heard, upon not less than two (2) **Days** notice.

ARTICLE 49. EXERCISE OF THE RIGHT TO DECLARE DEFAULT

49.1 The right to declare the **Contractor** in default for any of the grounds specified or referred to in Article 48 shall be exercised by sending the **Contractor** a notice, signed by the **Commissioner**, setting forth the ground or grounds upon which such default is declared (hereinafter referred to as a "Notice of Default").

49.2 The **Commissioner's** determination that the **Contractor** is in default shall be conclusive, final, and binding on the parties and such a finding shall preclude the **Contractor** from commencing a plenary action for any damages relating to the **Contract**. If the **Contractor** protests the determination of the **Commissioner**, the **Contractor** may commence an action in a court of competent jurisdiction of the State of New York under Article 78 of the New York Civil Practice Law and Rules.

ARTICLE 50. QUITTING THE SITE

50.1 Upon receipt of such notice the **Contractor** shall immediately discontinue all further operations under this **Contract** and shall immediately quit the **Site**, leaving untouched all plant, materials, equipment, tools, and supplies then on the **Site**.

ARTICLE 51. COMPLETION OF THE WORK

51.1 The **Commissioner**, after declaring the **Contractor** in default, may then have the **Work** completed by such means and in such manner, by contract with or without public letting, or otherwise, as he/she may deem advisable, utilizing for such purpose such of the **Contractor's** plant, materials, equipment, tools, and supplies remaining on the **Site**, and also such **Subcontractors**, as he/she may deem advisable.

51.2 After such completion, the **Commissioner** shall make a certificate stating the expense incurred in such completion, which shall include the cost of re-letting and also the total amount of liquidated damages (at the rate provided for in the **Contract**) from the date when the **Work** should have been completed by the **Contractor** in accordance with the terms hereof to the date of actual completion of the **Work**. Such certificate shall be binding and conclusive upon the **Contractor**, its sureties, and any person claiming under the **Contractor**, as to the amount thereof.

51.3 The expense of such completion, including any and all related and incidental costs, as so certified by the **Commissioner**, and any liquidated damages assessed against the **Contractor**, shall be charged against and deducted out of monies which are earned by the **Contractor** prior to the date of default. Should the expense of such completion, as certified by the **Commissioner**, exceed the total sum which would have been payable under the **Contract** if it had been completed by the **Contractor**, any excess shall be paid by the **Contractor**.

ARTICLE 52. PARTIAL DEFAULT

52.1 In case the **Commissioner** shall declare the **Contractor** in default as to a part of the **Work** only, the **Contractor** shall discontinue such part, shall continue performing the remainder of the **Work** in strict conformity with the terms of this **Contract**, and shall in no way hinder or interfere with any **Other**

Contractor(s) or persons whom the **Commissioner** may engage to complete the **Work** as to which the **Contractor** was declared in default.

52.2 The provisions of this Chapter relating to declaring the **Contractor** in default as to the entire **Work** shall be equally applicable to a declaration of partial default, except that the **Commissioner** shall be entitled to utilize for completion of the part of the **Work** as to which the **Contractor** was declared in default only such plant, materials, equipment, tools, and supplies as had been previously used by the **Contractor** on such part.

ARTICLE 53. PERFORMANCE OF UNCOMPLETED WORK

53.1 In completing the whole or any part of the **Work** under the provisions of this Chapter X, the **Commissioner** shall have the power to depart from or change or vary the terms and provisions of this **Contract**, provided, however, that such departure, change or variation is made for the purpose of reducing the time or expense of such completion. Such departure, change or variation, even to the extent of accepting a lesser or different performance, shall not affect the conclusiveness of the **Commissioner's** certificate of the cost of completion referred to in Article 51, nor shall it constitute a defense to an action to recover the amount by which such certificate exceeds the amount which would have been payable to the **Contractor** hereunder but for its default.

ARTICLE 54. OTHER REMEDIES

54.1 In addition to the right to declare the **Contractor** in default pursuant to this Chapter X, the **Commissioner** shall have the absolute right, in his/her sole discretion and without a hearing, to complete or cause to be completed in the same manner as described in Articles 51 and 53, any or all unsatisfactory or uncompleted punch list **Work** that remains after the completion date specified in the **Final Approved Punch List**. A written notice of the exercise of this right shall be sent to the **Contractor** who shall immediately quit the **Site** in accordance with the provisions of Article 50.

54.2 The expense of completion permitted under Article 54.1, including any and all related and incidental costs, as so certified by the **Commissioner**, shall be charged against and deducted out of monies which have been earned by the **Contractor** prior to the date of the exercise of the right set forth in Article 54.1; the balance of such monies, if any, subject to the other provisions of this **Contract**, to be paid to the **Contractor** without interest after such completion. Should the expense of such completion, as certified by the **Commissioner**, exceed the total sum which would have been payable under the **Contract** if it had been completed by the **Contractor**, any excess shall be paid by the **Contractor**.

54.3 The previous provisions of this Chapter X shall be in addition to any and all other remedies available under **Law** or in equity.

54.4 The exercise by the **City** of any remedy set forth herein shall not be deemed a waiver by the **City** of any other legal or equitable remedy contained in this **Contract** or provided under **Law**.

CHAPTER XI
MISCELLANEOUS PROVISIONS

ARTICLE 55. CONTRACTOR'S WARRANTIES

55.1 In consideration of, and to induce, the award of this **Contract** to the **Contractor**, the **Contractor** represents and warrants:

55.1.1 That it is financially solvent, sufficiently experienced and competent to perform the **Work**; and

55.1.2 That the facts stated in its bid and the information given by it pursuant to the Information for Bidders is true and correct in all respects; and

55.1.3 That it has read and complied with all requirements set forth in the **Contract**.

ARTICLE 56. CLAIMS AND ACTIONS THEREON

56.1 Any claim, that is not subject to dispute resolution under the **PPB** Rules or this **Contract**, against the **City** for damages for breach of **Contract** shall not be made or asserted in any action, unless the **Contractor** shall have strictly complied with all requirements relating to the giving of notice and of information with respect to such claims, as herein before provided.

56.2 Nor shall any action be instituted or maintained on any such claims unless such action is commenced within six (6) months after **Substantial Completion**; except that:

56.2.1 Any claims arising out of events occurring after **Substantial Completion** and before **Final Acceptance** of the **Work** shall be asserted within six (6) months of **Final Acceptance** of the **Work**;

56.2.2 Any claims for monies deducted, retained or withheld under the provisions of this **Contract** shall be asserted within six (6) months after the date when such monies otherwise become due and payable hereunder; and

56.2.3 If the **Commissioner** exercises his/her right to terminate the **Contract** pursuant to Article 64, any such action shall be commenced within six (6) months of the date the **Commissioner** exercises said right.

ARTICLE 57. INFRINGEMENT

57.1 The **Contractor** shall be solely responsible for and shall defend, indemnify, and hold the **City** harmless from any and all claims (even if the allegations of the lawsuit are without merit) and judgments for damages and from costs and expenses to which the **City** may be subject to or which it may suffer or incur allegedly arising out of or in connection with any infringement by the **Contractor** of any copyright, trade secrets, trademark or patent rights or any other property or personal right of any third party by the **Contractor** and/or its **Subcontractors** in the performance or completion of the **Work**. Insofar as the facts or **Law** relating to any claim would preclude the **City** from being completely indemnified by the **Contractor**, the **City** shall be partially indemnified by the **Contractor** to the fullest extent permitted by **Law**.

ARTICLE 58. NO CLAIM AGAINST OFFICIALS, AGENTS OR EMPLOYEES

58.1 No claim whatsoever shall be made by the **Contractor** against any official, agent or employee of the **City** for, or on account of, anything done or omitted to be done in connection with this **Contract**.

ARTICLE 59. SERVICE OF NOTICES

59.1 The **Contractor** hereby designates the business address, fax number, and email address specified in its bid, as the place where all notices, directions or other communications to the **Contractor** may be delivered, or to which they may be mailed. Any notice, direction, or communication from either party to the other shall be in writing and shall be deemed to have been given when (i) delivered personally; (ii) sent by certified mail, return receipt requested; (iii) delivered by overnight or same day courier service in a properly addressed envelope with confirmation; or (iv) sent by fax or email and, unless receipt of the fax or e-mail is acknowledged by the recipient by fax or e-mail, deposited in a post office box regularly maintained by the United States Postal Service in a properly addressed, postage pre-paid envelope.

59.2 **Contractor's** notice address, email address, or fax number may be changed at any time by an instrument in writing, executed and acknowledged by the **Contractor**, and delivered to the **Commissioner**.

59.3 Nothing herein contained shall, however, be deemed to preclude or render inoperative the service of any notice, direction or other communication upon the **Contractor** personally, or, if the **Contractor** is a corporation, upon any officer thereof.

ARTICLE 60. UNLAWFUL PROVISIONS DEEMED STRICKEN FROM CONTRACT

60.1 If this **Contract** contains any unlawful provision not an essential part of the **Contract** and which shall not appear to have been a controlling or material inducement to the making thereof, the same shall be deemed of no effect and shall, upon notice by either party, be deemed stricken from the **Contract** without affecting the binding force of the remainder.

ARTICLE 61. ALL LEGAL PROVISIONS DEEMED INCLUDED

61.1 It is the intent and understanding of the parties to this **Contract** that each and every provision of **Law** required to be inserted in this **Contract** shall be and is inserted herein. Furthermore, it is hereby stipulated that every such provision is to be deemed to be inserted herein, and if, through mistake or otherwise, any such provision is not inserted, or is not inserted in correct form, then this **Contract** shall forthwith upon the application of either party be amended by such insertion so as to comply strictly with the **Law** and without prejudice to the rights of either party hereunder.

ARTICLE 62. TAX EXEMPTION

62.1 The **City** is exempt from payment of Federal, State, and local taxes, including sales and compensating use taxes of the State of New York and its cities and counties on all tangible personal property sold to the **City** pursuant to the provisions of this **Contract**. These taxes are not to be included in bids. However, this exemption does not apply to tools, machinery, equipment or other property leased by or to the **Contractor**, **Subcontractor** or **Materialman** or to tangible personal property which, even

though it is consumed, is not incorporated into the completed **Work** (consumable supplies) and tangible personal property that the **Contractor** is required to remove from the **Site** during or upon completion of the **Work**. The **Contractor** and its **Subcontractors** and **Materialmen** shall be responsible for and pay any and all applicable taxes, including sales and compensating use taxes, on such leased tools, machinery, equipment or other property and upon all such consumable supplies and tangible personal property that the **Contractor** is required to remove from the **Site** during or upon completion of the **Work**.

62.2 The **Contractor** agrees to sell and the **City** agrees to purchase all tangible personal property, other than consumable supplies and other tangible personal property that the **Contractor** is required to remove from the **Site** during or upon completion of the **Work**, that is required, necessary or proper for or incidental to the construction of the **Project** covered by this **Contract**. The sum paid under this **Contract** for such tangible personal property shall be in full payment and consideration for the sale of such tangible personal property.

62.2.1 The **Contractor** agrees to construct the **Project** and to perform all **Work**, labor and services rendered, necessary, proper or incidental thereto for the sum shown in the bid for the performance of such **Work**, labor, and services, and the sum so paid pursuant to this **Contract** for such **Work**, labor, and services, shall be in full consideration for the performance by the **Contractor** of all its duties and obligations under this **Contract** in connection with said **Work**, labor, and services.

62.3 20 NYCRR Section 541.3(d) provides that a **Contractor**'s purchases of tangible personal property that is either incorporated into real property owned by a governmental entity or purchased for and sold to a governmental entity are exempt from sales and use tax. The **City** shall not pay sales tax for any such tangible personal property that it purchases from the **Contractor** pursuant to the **Contract.** With respect to such tangible personal property, the **Contractor**, at the request of the **City**, shall furnish to the **City** such bills of sale and other instruments as may be required by the **City**, properly executed, acknowledged and delivered assuring to the **City** title to such tangible personal property, free of liens and/or encumbrances, and the **Contractor** shall mark or otherwise identify all such tangible personal property as the property of the **City**.

62.4 Title to all tangible personal property to be sold by the **Contractor** to the **City** pursuant to the provisions of the **Contract** shall immediately vest in and become the sole property of the **City** upon delivery of such tangible personal property to the **Site**. Notwithstanding such transfer of title, the **Contractor** shall have the full and continuing responsibility to install such tangible personal property in accordance with the provisions of this **Contract**, protect it, maintain it in a proper condition and forthwith repair, replace and make good any damage thereto, theft or disappearance thereof, and furnish additional tangible personal property in place of any that may be lost, stolen or rendered unusable, without cost to the **City**, until such time as the **Work** covered by the **Contract** is fully accepted by the **City**. Such transfer of title shall in no way affect any of the **Contractor's** obligations hereunder. In the event that, after title has passed to the **City**, any of the tangible personal property is rejected as being defective or otherwise unsatisfactory, title to all such tangible personal property shall be deemed to have been transferred back to the **Contractor**.

62.5 The purchase by **Subcontractors** or **Materialmen** of tangible personal property to be sold hereunder shall be a purchase or procurement for resale to the **Contractor** (either directly or through other **Subcontractors**) and therefore not subject to the aforesaid sales and compensating use taxes, provided that the subcontracts and purchase agreements provide for the resale of such tangible personal property and that such subcontracts and purchase agreements are in a form similar to this **Contract** with respect to the separation of the sale of consumable supplies and tangible personal property that the **Contractor** is required to remove from the **Site** during or upon completion of the **Work** from the **Work** and labor, services, and any other matters to be provided, and provided further that the subcontracts and

purchase agreements provide separate prices for tangible personal property and all other services and matters. Such separation shall actually be followed in practice, including the separation of payments for tangible personal property from the payments for other **Work** and labor and other things to be provided.

62.6 The **Contractor** and its **Subcontractors** and **Materialmen** shall furnish a **Contractor** Exempt Purchase Certificate to all persons, firms or corporations from which they purchase tangible personal property for the performance of the **Work** covered by this **Contract**.

62.7 In the event any of the provisions of this Article 62 shall be deemed to be in conflict with any other provisions of this **Contract** or create any ambiguity, then the provisions of this Article 62 shall control.

ARTICLE 63. INVESTIGATION(S) CLAUSE

63.1 The parties to this **Contract** agree to cooperate fully and faithfully with any investigation, audit or inquiry conducted by a United States, a State of New York (State) or a **City** governmental agency or authority that is empowered directly or by designation to compel the attendance of witnesses and to examine witnesses under oath, or conducted by the Inspector General of a governmental agency that is a party in interest to the transaction, submitted bid, submitted proposal, contract, lease, permit or license that is the subject of the investigation, audit or inquiry.

63.2 If any person who has been advised that his/her statement, and any information from such statement, will not be used against him/her in any subsequent criminal proceeding refuses to testify before a grand jury or other governmental agency or authority empowered directly or by designation to compel the attendance of witnesses and to examine witnesses under oath concerning the award of or performance under any transaction, agreement, lease, permit, contract, or license entered into with the **City**, the State, or any political subdivision or public authority thereof, or the Port Authority of New York and New Jersey, or any local development corporation within the **City**, or any public benefit corporation organized under the **Laws** of the State of New York, or;

63.3 If any person refuses to testify for a reason other than the assertion of his/her privilege against self incrimination in an investigation, audit or inquiry conducted by a **City** or State governmental agency or authority empowered directly or by designation to compel the attendance of witnesses and to take testimony under oath, or by the Inspector General of the governmental agency that is a party in interest in, and is seeking testimony concerning the award of, or performance under any transaction, agreement, lease, permit, contract, or license entered into with the **City**, the State, or any political subdivision thereof or any local development corporation within the **City**, then;

63.4 The **Commissioner** whose **Agency** is a party in interest to the transaction, submitted bid, submitted proposal, contract, lease, permit, or license shall convene a hearing, upon not less than five (5) **Days'** written notice to the parties involved to determine if any penalties should attach for the failure of a person to testify.

63.5 If any non-governmental party to the hearing requests an adjournment, the **Commissioner** who convened the hearing may, upon granting the adjournment, suspend any contract, lease, permit, or license, pending the final determination pursuant to Article 63.7 without the **City** incurring any penalty or damages for delay or otherwise.

63.6 The penalties which may attach after a final determination by the **Commissioner** may include but shall not exceed:

63.6.1 The disqualification for a period not to exceed five (5) years from the date of an adverse determination for any person, or any entity of which such person was a member at the time the testimony was sought, from submitting bids for, or transacting business with, or entering into or obtaining any contract, lease, permit or license with or from the **City**; and/or

63.6.2 The cancellation or termination of any and all such existing **City** contracts, leases, permits or licenses that the refusal to testify concerns and that have not been assigned as permitted under this **Contract**, nor the proceeds of which pledged, to an unaffiliated and unrelated institutional lender for fair value prior to the issuance of the notice scheduling the hearing, without the **City** incurring any penalty or damages on account of such cancellation or termination; monies lawfully due for goods delivered, work done, rentals, or fees accrued prior to the cancellation or termination shall be paid by the **City**.

63.7 The **Commissioner** shall consider and address in reaching his/her determination and in assessing an appropriate penalty the factors in Articles 63.7.1 and 63.7.2. The **Commissioner** may also consider, if relevant and appropriate, the criteria established in Articles 63.7.3 and 63.7.4, in addition to any other information which may be relevant and appropriate:

63.7.1 The party's good faith endeavors or lack thereof to cooperate fully and faithfully with any governmental investigation or audit, including but not limited to the discipline, discharge, or disassociation of any person failing to testify, the production of accurate and complete books and records, and the forthcoming testimony of all other members, agents, assignees or fiduciaries whose testimony is sought.

63.7.2 The relationship of the person who refused to testify to any entity that is a party to the hearing, including but not limited to, whether the person whose testimony is sought has an ownership interest in the entity and/or the degree of authority and responsibility the person has within the entity.

63.7.3 The nexus of the testimony sought to the subject entity and its contracts, leases, permits or licenses with the **City**.

63.7.4 The effect a penalty may have on an unaffiliated and unrelated party or entity that has a significant interest in an entity subject to penalties under Article 63.6, provided that the party or entity has given actual notice to the **Commissioner** upon the acquisition of the interest, or at the hearing called for in Article 63.4, gives notice and proves that such interest was previously acquired. Under either circumstance the party or entity shall present evidence at the hearing demonstrating the potential adverse impact a penalty will have on such person or entity.

63.8 Definitions:

63.8.1 The term "license" or "permit" as used in this Article 63 shall be defined as a license, permit, franchise or concession not granted as a matter of right.

63.8.2 The term "person" as used in this Article 63 shall be defined as any natural person doing business alone or associated with another person or entity as a partner, director, officer, principal or employee.

63.8.3 The term "entity" as used in this Article 63 shall be defined as any firm, partnership, corporation, association, joint venture, or person that receives monies, benefits, licenses, leases, or permits from or through the **City** or otherwise transacts business with the **City**.

63.8.4 The term "member" as used in this Article 63 shall be defined as any person associated with another person or entity as a partner, director, officer, principal or employee.

63.9 In addition to and notwithstanding any other provision of this **Contract**, the **Commissioner** may in his/her sole discretion terminate this **Contract** upon not less than three (3) **Days'** written notice in the event the **Contractor** fails to promptly report in writing to the **Commissioner** of the Department of Investigations ("DOI") of the **City** any solicitation of money, goods, requests for future employment or other benefit or thing of value, by or on behalf of any employee of the **City** or other person, firm, corporation or entity for any purpose which may be related to the procurement or obtaining of this **Contract** by the **Contractor**, or affecting the performance of this **Contract**.

ARTICLE 64. TERMINATION BY THE CITY

64.1 In addition to termination pursuant to any other article of this **Contract**, the **Commissioner** may, at any time, terminate this **Contract** by written notice to the **Contractor**. In the event of termination, the **Contractor** shall, upon receipt of such notice, unless otherwise directed by the **Commissioner**:

64.1.1 Stop **Work** on the date specified in the notice;

64.1.2 Take such action as may be necessary for the protection and preservation of the **City's** materials and property;

64.1.3 Cancel all cancelable orders for material and equipment;

64.1.4 Assign to the **City** and deliver to the **Site** or another location designated by the **Commissioner**, any non-cancelable orders for material and equipment that is not capable of use except in the performance of this **Contract** and has been specifically fabricated for the sole purpose of this **Contract** and not incorporated in the **Work**;

64.1.5 Take no action which will increase the amounts payable by the **City** under this **Contract**.

64.2 In the event of termination by the **City** pursuant to this Article 64, payment to the **Contractor** shall be in accordance with Articles 64.2.1, 64.2.2 or 64.2.3, to the extent that each respective article applies.

64.2.1 Lump Sum Contracts or Items: On all lump sum **Contracts**, or on lump sum items in a **Contract**, the **City** will pay the **Contractor** the sum of the amounts described in Articles 64.2.1(a) and 64.2.1(b), less all payments previously made pursuant to this **Contract**. On lump sum **Contracts** only, the **City** will also pay the **Contractor** an additional sum as provided in Article 64.2.1(c).

64.2.1(a) For **Work** completed prior to the notice of termination, the **Contractor** shall be paid a pro rata portion of the lump sum bid amount, plus approved change orders, based upon the percent completion of the **Work**, as determined by the **Commissioner**. For the purpose of determining the pro rata portion of the lump sum bid amount to which the **Contractor** is entitled, the bid breakdown submitted in accordance with Article 41 shall be considered, but shall not be dispositive. The **Commissioner's** determination hereunder shall be final, binding, and conclusive.

64.2.1(b) For non-cancelable material and equipment that is not capable of use except in the performance of this **Contract** and has been specifically fabricated for the sole purpose of this **Contract**, but not yet incorporated in the **Work**, the **Contractor** shall be paid the lesser of the following, less salvage value:

64.2.1(b)(i) The Direct Cost, as defined in Article 64.2.4; or

64.2.1(b)(ii) The fair and reasonable value, if less than Direct Cost, of such material and equipment, plus necessary and reasonable delivery costs.

64.2.1(b)(iii) In addition, the **Contractor** shall be paid five (5%) percent of the amount described in Article 64.2.1(b)(i) or Article 64.2.1(b)(ii), whichever applies.

64.2.1(c) Except as otherwise provided in Article 64.2.1(d), on all lump sum **Contracts**, the **Contractor** shall be paid the percentage indicated below applied to the difference between the total lump sum bid amount and the total of all payments made prior to the notice of termination plus all payments allowed pursuant to Articles 64.2.1(a) and 64.2.1(b):

64.2.1(c)(i) Five (5%) percent of the first five million ($5,000,000) dollars; and

64.2.1(c)(ii) Three (3%) percent of any amount between five million ($5,000,000) dollars and fifteen million ($15,000,000) dollars; plus

64.2.1(c)(iii) One (1%) percent of any amount over fifteen million ($15,000,000) dollars.

64.2.1(d) In the event the **City** terminates a lump sum **Contract** pursuant to this Article 64 within ninety (90) **Days** after registration of the **Contract** with the **Comptroller**, the **Contractor** shall be paid one (1%) percent of the difference between the lump sum bid amount and the total of all payments made pursuant to this Article 64.2.

64.2.2 Unit Price Contracts or Items: On all unit price **Contracts**, or on unit price items in a **Contract**, the **City** will pay the **Contractor** the sum of the amounts described in Articles 64.2.2(a) and 64.2.2(b), less all payments previously made pursuant to this **Contract**:

64.2.2(a) For all completed units, the unit price stated in the **Contract**, and

64.2.2(b) For units that have been ordered but are only partially completed, the **Contractor** will be paid:

64.2.2(b)(i) A pro rata portion of the unit price stated in the **Contract** based upon the percent completion of the unit and

64.2.2(b)(ii) For non-cancelable material and equipment, payment will be made pursuant to Article 64.2.1(b).

64.2.3 Time and Materials Contracts or Items Based on Time and Material Records: On all **Contracts** or items in a **Contract** where payment for the **Work** is based on time and

material records, the **Contractor** shall be paid in accordance with Article 26, less all payments previously made pursuant to this **Contract**.

64.2.4 Direct Costs: Direct Costs as used in this Article 64.2 shall mean:

64.2.4(a) The actual purchase price of material and equipment, plus necessary and reasonable delivery costs,

64.2.4(b) The actual cost of labor involved in construction and installation at the **Site**, and

64.2.4(c) The actual cost of necessary bonds and insurance purchased pursuant to requirements of this **Contract** less any amounts that have been or should be refunded by the **Contractor's** sureties or insurance carriers.

64.2.4(d) Direct Costs shall not include overhead.

64.3 In no event shall any payments under this Article 64 exceed the **Contract** price for such items.

64.4 All payments pursuant to Article 64 shall be in the nature of liquidated damages and shall be accepted by the **Contractor** in full satisfaction of all claims against the **City**.

64.5 The **City** may deduct or set off against any sums due and payable pursuant to this Article 64, any deductions authorized by this **Contract** or by **Law** (including but not limited to liquidated damages) and any claims it may have against the **Contractor**. The **City's** exercise of the right to terminate the **Contract** pursuant to this Article 64 shall not impair or otherwise effect the **City's** right to assert any claims it may have against the **Contractor** in a plenary action.

64.6 Where the **Work** covered by the **Contract** has been substantially completed, as determined in writing by the **Commissioner**, termination of the **Work** shall be handled as an omission of **Work** pursuant to Articles 29 and 33, in which case a change order will be issued to reflect an appropriate reduction in the **Contract** sum, or if the amount is determined after final payment, such amount shall be paid by the **Contractor**.

ARTICLE 65. CHOICE OF LAW, CONSENT TO JURISDICTION AND VENUE

65.1 This **Contract** shall be deemed to be executed in the **City** regardless of the domicile of the **Contractor**, and shall be governed by and construed in accordance with the **Laws** of the State of New York and the **Laws** of the United States, where applicable.

65.2 The parties agree that any and all claims asserted against the **City** arising under this **Contract** or related thereto shall be heard and determined in the courts of the State of New York ("New York State Courts") located in the **City** and County of New York. To effect this **Contract** and intent, the **Contractor** agrees:

65.2.1 If the **City** initiates any action against the **Contractor** in Federal court or in a New York State Court, service of process may be made on the **Contractor** either in person, wherever such **Contractor** may be found, or by registered mail addressed to the **Contractor** at its address as set forth in this **Contract**, or to such other address as the **Contractor** may provide to the **City** in writing; and

65.2.2 With respect to any action between the **City** and the **Contractor** in a New York State Court, the **Contractor** hereby expressly waives and relinquishes any rights it might otherwise have:

65.2.2(a) To move to dismiss on grounds of forum non conveniens;

65.2.2(b) To remove to Federal Court; and

65.2.2(c) To move for a change of venue to a New York State Court outside New York County.

65.2.3 With respect to any action brought by the **City** against the **Contractor** in a Federal Court located in the **City**, the **Contractor** expressly waives and relinquishes any right it might otherwise have to move to transfer the action to a Federal Court outside the **City**.

65.2.4 If the **Contractor** commences any action against the **City** in a court located other than in the **City** and County of New York, upon request of the **City**, the **Contractor** shall either consent to a transfer of the action to a New York State Court of competent jurisdiction located in the **City** and County of New York or, if the Court where the action is initially brought will not or cannot transfer the action, the **Contractor** shall consent to dismiss such action without prejudice and may thereafter reinstate the action in a New York State Court of competent jurisdiction in New York County.

65.3 If any provision(s) of this Article 65 is held unenforceable for any reason, each and all other provision(s) shall nevertheless remain in full force and effect.

ARTICLE 66. PARTICIPATION IN AN INTERNATIONAL BOYCOTT

66.1 The **Contractor** agrees that neither the **Contractor** nor any substantially owned affiliated company is participating or shall participate in an international boycott in violation of the provisions of the Federal Export Administration Act of 1979, as amended, or the regulations of the United States Department of Commerce (Commerce Department) promulgated thereunder.

66.2 Upon the final determination by the Commerce Department or any other agency of the United States as to, or conviction of the **Contractor** or a substantially-owned affiliated company thereof for participation in an international boycott in violation of the provisions of the Export Administration Act of 1979, as amended, or the regulations promulgated thereunder, the **Comptroller** may, at his/her option, render forfeit and void this **Contract**.

66.3 The **Contractor** shall comply in all respects, with the provisions of Section 6-114 of the Administrative Code and the rules and regulations issued by the **Comptroller** thereunder.

ARTICLE 67. LOCALLY BASED ENTERPRISE PROGRAM

67.1 This **Contract** is subject to the requirements of Section 6-108.1 of the Administrative Code and regulations promulgated thereunder. No construction contract shall be awarded unless and until these requirements have been complied with in their entirety; however, compliance with this Article 67 is not required if the Agency sets Subcontractor Participation Goals for Minority- and Women-Owned Business Enterprises (M/WBEs).

67.2 Unless specifically waived by the **Commissioner** with the approval of the Division of Economic and Financial Opportunity of the **City** Department of Business Services, if any portion of the **Contract** is subcontracted, not less than ten (10%) percent of the total dollar amount of the **Contract** shall be awarded to locally based enterprises (LBEs); except that where less than ten (10%) percent of the total dollar amount of the **Contract** is subcontracted, such lesser percentage shall be so awarded.

67.3 The **Contractor** shall not require performance and payment bonds from LBE **Subcontractors**.

67.4 If the **Contractor** has indicated prior to award that no **Work** will be subcontracted, no **Work** shall be subcontracted without the prior approval of the **Commissioner**, which shall be granted only if the **Contractor** makes a good faith effort beginning at least six (6) weeks before the **Work** is to be performed to obtain LBE **Subcontractors** to perform the **Work**.

67.5 If the **Contractor** has not identified sufficient LBE **Subcontractors** prior to award, it shall sign a letter of compliance stating that it complies with Section 6-108.1 of the Administrative Code, recognizes that achieving the LBE requirement is a condition of its **Contract**, and shall submit documentation demonstrating its good faith efforts to obtain LBEs. After award, the **Contractor** shall begin to solicit LBE's to perform subcontracted **Work** at least six (6) weeks before the date such **Work** is to be performed and shall demonstrate that a good faith effort has been made to obtain LBEs on each subcontract until it meets the required percentage.

67.6 Failure of the **Contractor** to comply with the requirements of Section 6-108.1 of the Administrative Code and the regulations promulgated thereunder shall constitute a material breach of this **Contract**. Remedy for such breach may include the imposition of any or all of the following sanctions:

67.6.1 Reducing the **Contractor's** compensation by an amount equal to the dollar value of the percentage of the LBE subcontracting requirement not complied with;

67.6.2 Declaring the **Contractor** in default;

67.6.3 If the **Contractor** is an LBE, de-certifying and declaring the **Contractor** ineligible to participate in the LBE program for a period of up to three (3) years.

ARTICLE 68. ANTITRUST

68.1 The **Contractor** hereby assigns, sells, and transfers to the **City** all right, title, and interest in and to any claims and causes of action arising under the antitrust **Laws** of New York State or of the United States relating to the particular goods or services purchased or procured by the **City** under this **Contract**.

ARTICLE 69. MacBRIDE PRINCIPLES PROVISIONS

69.1 Notice To All Prospective **Contractors**:

69.1.1 Local Law No. 34 of 1991 became effective on September 10, 1991 and added Section 6-115.1 of the Administrative Code. The local **Law** provides for certain restrictions on **City Contracts** to express the opposition of the people of the **City** to employment discrimination practices in Northern Ireland to promote freedom of work-place opportunity.

69.1.2 Pursuant to Section 6-115.1, prospective **Contractors** for **Contracts** to provide goods or services involving an expenditure of an amount greater than ten thousand

($10,000.) dollars, or for construction involving an amount greater than fifteen thousand ($15,000.) dollars, are asked to sign a rider in which they covenant and represent, as a material condition of their **Contract**, that any business operations in Northern Ireland conducted by the **Contractor** and any individual or legal entity in which the **Contractor** holds a ten (10%) percent or greater ownership interest in the **Contractor** will be conducted in accordance with the MacBride Principles of nondiscrimination in employment.

69.1.3 Prospective **Contractors** are not required to agree to these conditions. However, in the case of **Contracts** let by competitive sealed bidding, whenever the lowest responsible bidder has not agreed to stipulate to the conditions set forth in this notice and another bidder who has agreed to stipulate to such conditions has submitted a bid within five (5%) percent of the lowest responsible bid for a **Contract** to supply goods, services or contraction of comparable quality, the **Agency** shall refer such bids to the Mayor, the Speaker or other officials, as appropriate, who may determine, in accordance with applicable **Law**, that it is in the best interest of the **City** that the **Contract** be awarded to other than the lowest responsible pursuant to Section 313(b)(2) of the **City** Charter.

69.1.4 In the case of **Contracts** let by other than competitive sealed bidding, if a prospective **Contractor** does not agree to these conditions, no **Agency**, elected official or the **City** Council shall award the **Contract** to that bidder unless the **Agency** seeking to use the goods, services or construction certifies in writing that the **Contract** is necessary for the **Agency** to perform its functions and there is no other responsible **Contractor** who will supply goods, services or construction of comparable quality at a comparable price.

69.2 In accordance with Section 6-115.1 of the Administrative Code, the **Contractor** stipulates that such **Contractor** and any individual or legal entity in which the **Contractor** holds a ten (10%) percent or greater ownership interest in the **Contractor** either:

69.2.1 Have no business operations in Northern Ireland, or

69.2.2 Shall take lawful steps in good faith to conduct any business operations they have in Northern Ireland in accordance with the MacBride Principles, and shall permit independent monitoring of their compliance with such principles.

69.3 For purposes of this Article, the following terms shall have the following meanings:

69.3.1 "MacBride Principles" shall mean those principles relating to nondiscrimination in employment and freedom of work-place opportunity which require employers doing business in Northern Ireland to:

69.3.1(a) increase the representation of individuals from under-represented religious groups in the workforce, including managerial, supervisory, administrative, clerical and technical jobs;

69.3.1(b) take steps to promote adequate security for the protection of employees from under-represented religious groups both at the work-place and while traveling to and from **Work**;

69.3.1(c) ban provocative religious or political emblems from the workplace;

69.3.1(d) publicly advertise all job openings and make special recruitment efforts to attract applicants from under-represented religious groups;

69.3.1(e) establish layoff, recall, and termination procedures which do not in practice favor a particular religious group;

69.3.1(f) abolish all job reservations, apprenticeship restrictions and different employment criteria which discriminate on the basis of religion;

69.3.1(g) develop training programs that will prepare substantial numbers of current employees from under-represented religious groups for skilled jobs, including the expansion of existing programs and the creation of new programs to train, upgrade, and improve the skills of workers from under-represented religious groups;

69.3.1(h) establish procedures to asses, identify, and actively recruit employees from under-represented religious groups with potential for further advancement; and

69.3.1(i) appoint a senior management staff member to oversee affirmative action efforts and develop a timetable to ensure their full implementation.

69.4 The **Contractor** agrees that the covenants and representations in Article 69.2 are material conditions to this **Contract**. In the event the **Agency** receives information that the **Contractor** who made the stipulation required by this Article 69 is in violation thereof, the **Agency** shall review such information and give the **Contractor** an opportunity to respond. If the **Agency** finds that a violation has occurred, the **Agency** shall have the right to declare the **Contractor** in default in default and/or terminate this **Contract** for cause and procure supplies, services or **Work** from another source in the manner the **Agency** deems proper. In the event of such termination, the **Contractor** shall pay to the **Agency**, or the **Agency** in its sole discretion may withhold from any amounts otherwise payable to the **Contractor**, the difference between the **Contract** price for the uncompleted portion of this **Contract** and the cost to the **Agency** of completing performance of this **Contract** either itself or by engaging another **Contractor** or **Contractors**. In the case of a requirement **Contract**, the **Contractor** shall be liable for such difference in price for the entire amount of supplies required by the **Agency** for the uncompleted term of **Contractor's Contract**. In the case of a construction **Contract**, the **Agency** shall also have the right to hold the **Contractor** in partial or total default in accordance with the default provisions of this **Contract**, and/or may seek debarment or suspension of the **Contractor**. The rights and remedies of the **Agency** hereunder shall be in addition to, and not in lieu of, any rights and remedies the **Agency** has pursuant to this **Contract** or by operation of **Law**.

ARTICLE 70. ELECTRONIC FILING/NYC DEVELOPMENT HUB

70.1 The **Contractor** shall electronically file all alteration type-2 and alteration type-3 applications via the New York City Development Hub Web site, except applications for the following types of minor alterations: enlargements, curb cuts, legalizations, fire alarms, builders pavement plans, and jobs filed on Landmark Preservation Commission calendared properties. All such filings must be professionally certified. Information about electronic filing via the New York City Development Hub is available on the **City** Department of Buildings Web site at www.nyc.gov/buildings.

ARTICLE 71. PROHIBITION OF TROPICAL HARDWOODS

71.1 Tropical hardwoods, as defined in Section 165 of the New York State Finance Law (Finance Law), shall not be utilized in the performance of this **Contract** except as expressly permitted by Section 165 of the Finance Law.

ARTICLE 72. CONFLICTS OF INTEREST

72.1 Section 2604 of the **City** Charter and other related provisions of the **City** Charter, the Administrative Code, and the Penal Law are applicable under the terms of this **Contract** in relation to conflicts of interest and shall be extended to **Subcontractors** authorized to perform **Work**, labor and services pursuant to this **Contract** and further, it shall be the duty and responsibility of the **Contractor** to so inform its respective **Subcontractors**. Notice is hereby given that, under certain circumstances, penalties may be invoked against the donor as well as the recipient of any form of valuable gift.

ARTICLE 73. MERGER CLAUSE

73.1 The written **Contract** herein, contains all the terms and conditions agreed upon by the parties hereto, and no other agreement, oral or otherwise, regarding the subject matter of this **Contract** shall be deemed to exist or to bind any of the parties hereto, or to vary any of the terms contained herein.

ARTICLE 74. STATEMENT OF WORK

74.1 The **Contractor** shall furnish all labor and materials and perform all **Work** in strict accordance with the **Specifications** and **Addenda** thereto, numbered 1.

ARTICLE 75. COMPENSATION TO BE PAID TO CONTRACTOR

75.1 The **City** will pay and the **Contractor** will accept in full consideration for the performance of the **Contract**, subject to additions and deductions as provided herein, the total sum of: Nineteen million, Six hundred Dollars, ($19,605,130.25), this said sum being the amount at which the **Contract** was awarded to the **Contractor** at a public letting thereof, based upon the **Contractor's** bid for the **Contract**.
Five thousand, One Hundred Thirty 25/100.

ARTICLE 76. ELECTRONIC FUNDS TRANSFER

76.1 In accordance with Section 6-107.1 of the Administrative Code, the **Contractor** agrees to accept payments under this **Contract** from the **City** by electronic funds transfer (EFT). An EFT is any transfer of funds, other than a transaction originated by check, draft or similar paper instrument, which is initiated through an electronic terminal, telephonic instrument or computer or magnetic tape so as to order, instruct or authorize a financial institution to debit or credit an account. Prior to the first payment made under this **Contract**, the **Contractor** shall designate one financial institution or other authorized payment agent and shall complete the attached "EFT Vendor Payment Enrollment Form" in order to provide the Commissioner of the **City** Department of Finance with information necessary for the **Contractor** to receive electronic funds transfer payments through a designated financial institution or authorized payment agent. The crediting of the amount of a payment to the appropriate account on the books of a financial institution or other authorized payment agent designated by the **Contractor** shall constitute full satisfaction by the **City** for the amount of the payment under this **Contract**. The account information supplied by the **Contractor** to facilitate the electronic funds transfer shall remain confidential to the fullest extent provided by **Law**.

76.2 The **Commissioner** may waive the application of the requirements of this Article 76 to payments on contracts entered into pursuant to Section 315 of the **City** Charter. In addition, the Commissioner of the Department of Finance and the Comptroller may jointly issue standards pursuant to

which the **Agency** may waive the requirements of this Article 76 for payment in the following circumstances: (i) for individuals or classes of individuals for whom compliance imposes a hardship; (ii) for classifications or types of checks; or (iii) in other circumstances as may be necessary in the interest of the **City**.

ARTICLE 77. RECORDS RETENTION

77.1 The **Contractor** agrees to retain all books, records, and other documents relevant to this **Contract** for six years after the final payment or termination of this **Contract**, whichever is later. **City**, state, and federal auditors and any other persons duly authorized by the **City** shall have full access to and the right to examine any such books, records, and other documents during the retention period.

ARTICLE 78. PARTICIPATION BY MINORITY-OWNED AND WOMEN-OWNED BUSINESS ENTERPRISES IN CITY PROCUREMENT

NOTICE TO ALL PROSPECTIVE CONTRACTORS

ARTICLE I. M/WBE PROGRAM

Local Law No. 129 of 2005 added and Local Law 1 of 2013 amended Section 6-129 of the Administrative Code of the City of New York (hereinafter "Section 6-129"). Section 6-129 establishes the program for participation in City procurement ("M/WBE Program") by minority- owned business enterprises ("MBEs") and women-owned business enterprises ("WBEs"), certified in accordance with Section 1304 of the New York City Charter. As stated in Section 6-129, the intent of the program is to address the impact of discrimination on the City's procurement process, and to promote the public interest in avoiding fraud and favoritism in the procurement process, increasing competition for City business, and lowering contract costs. The contract provisions contained herein are pursuant to Section 6-129, and the rules of the Department of Small Business Services ("DSBS") promulgated thereunder.

If this Contract is subject to the M/WBE Program established by Section 6-129, the specific requirements of MBE and/or WBE participation for this Contract are set forth in Schedule B of the Contract (entitled the "M/WBE Utilization Plan"), and are detailed below. The Contractor must comply with all applicable MBE and WBE requirements for this Contract.

All provisions of Section 6-129 are hereby incorporated in the Contract by reference and all terms used herein that are not defined herein shall have the meanings given such terms in Section 6-129. Article I, Part A, below, sets forth provisions related to the participation goals for construction, standard and professional services contracts. Article I, Part B, below, sets forth miscellaneous provisions related to the M/WBE Program.

PART A

PARTICIPATION GOALS FOR CONSTRUCTION, STANDARD AND PROFESSIONAL SERVICES CONTRACTS OR TASK ORDERS

1. The **MBE and/or WBE Participation Goals** established for this Contract or Task Orders issued pursuant to this Contract, ("**Participation Goals**"), as applicable, are set forth on Schedule B, Part I to this Contract (see Page 1, line 1 Total Participation Goals) or will be set forth on Schedule B, Part I to Task Orders issued pursuant to this Contract, as applicable.

The **Participation Goals** represent a percentage of the total dollar value of the Contract or Task Order, as applicable, that may be achieved by awarding subcontracts to firms certified with New York City Department of Small Business Services as MBEs and/or WBEs, and/or by crediting the participation of prime contractors and/or qualified joint ventures as provided in Section 3 below, unless the goals have been waived or modified by Agency in accordance with Section 6-129 and Part A, Sections 10 and 11 below, respectively.

2. If **Participation Goals** have been established for this Contract or Task Orders issued pursuant to this Contract, Contractor agrees or shall agree as a material term of the Contract that Contractor shall be subject to the **Participation Goals**, unless the goals are waived or modified by Agency in accordance with Section 6-129 and Part A, Sections 10 and 11 below, respectively.

3. If **Participation Goals** have been established for this Contract or Task Order issued pursuant to this Contract, a Contractor that is an MBE and/or WBE shall be permitted to count its own participation toward fulfillment of the relevant **Participation Goal**, provided that in accordance with Section 6-129 the value of Contractor's participation shall be determined by subtracting from the total value of the Contract or Task Order, as applicable, any amounts that the Contractor pays to direct subcontractors (as defined in Section 6-129(c)(13)), and provided further that a Contractor that is certified as both an MBE and a WBE may count its own participation either toward the goal for MBEs or the goal for WBEs, but not both.

A Contractor that is a qualified joint venture (as defined in Section 6-129(c)(30)) shall be permitted to count a percentage of its own participation toward fulfillment of the relevant **Participation Goal**. In accordance with Section 6-129, the value of Contractor's participation shall be determined by subtracting from the total value of the Contract or Task Order, as applicable, any amounts that Contractor pays to direct subcontractors, and then multiplying the remainder by the percentage to be applied to total profit to determine the amount to which an MBE or WBE is entitled pursuant to the joint venture agreement, provided that where a participant in a joint venture is certified as both an MBE and a WBE, such amount shall be counted either toward the goal for MBEs or the goal for WBEs, but not both.

4. A. If **Participation Goals** have been established for this Contract, a prospective contractor shall be required to submit with its bid or proposal, as applicable, a completed Schedule B, M/WBE Utilization Plan, Part II (see Pages 2-4) indicating: (a) whether the contractor is an MBE or WBE, or qualified joint venture; (b) the percentage of work it intends to award to direct subcontractors; and (c) in cases where the contractor intends to award direct subcontracts, a description of the type and dollar value of work designated for participation by MBEs and/or WBEs, and the time frames in which such work is scheduled to begin and end. In the event that this M/WBE Utilization Plan indicates that the bidder or proposer, as applicable, does not intend to meet the **Participation Goals**, the bid or proposal, as applicable, shall be deemed non-responsive, unless Agency has granted the bidder or proposer, as applicable, a pre- award waiver of the Participation Goals in accordance with Section 6-129 and Part A, Section 10 below.

B. (i) If this Contract is for a master services agreement or other requirements type contract that will result in the issuance of Task Orders that will be individually registered ("Master Services Agreement") and is subject to M/WBE **Participation Goals**, a prospective contractor shall be required to submit with its bid or proposal, as applicable, a completed Schedule B, M/WBE Participation Requirements for Master Services Agreements That Will Require Individually Registered Task Orders, Part II (page 2) indicating the prospective contractor's certification and required affirmations to make all reasonable good faith efforts to meet participation goals established on each individual Task Order issued pursuant to this Contract, or if a partial waiver is obtained or such goals are modified by the Agency, to meet the modified **Participation Goals** by soliciting and obtaining the participation of certified MBE and/or WBE firms. In the event that the Schedule B indicates that the bidder or proposer, as applicable, does not intend to meet the **Participation Goals** that may be established on Task Orders issued pursuant to this Contract, the bid or proposal, as applicable, shall be deemed nonresponsive.

(ii) **Participation Goals** on a Master Services Agreement will be established for individual Task Orders issued after the Master Services Agreement is awarded. If **Participation Goals** have been established on a Task Order, a contractor shall be required to submit a Schedule B – M/WBE Utilization Plan For Independently Registered Task Orders That Are Issued Pursuant to Master Services Agreements, Part II (see Pages 2-4) indicating: (a) whether the contractor is an MBE or WBE, or qualified joint venture; (b) the percentage of work it intends to award to direct subcontractors; and (c) in cases where the contractor intends to award direct subcontracts, a description of the type and dollar value of work designated for participation by MBEs and/or WBEs, and the time frames in which such work is scheduled to begin and end. The contractor must engage in good faith efforts to meet the **Participation Goals** as established for the Task Order unless Agency has granted the contractor a pre-award waiver of the Participation Goals in accordance with Section 6-129 and Part A, Section 10 below.

C. THE BIDDER/PROPOSER MUST COMPLETE THE SCHEDULE B INCLUDED HEREIN (SCHEDULE B, PART II). A SCHEDULE B SUBMITTED BY THE BIDDER/PROPOSER WHICH DOES NOT INCLUDE THE VENDOR CERTIFICATION AND REQUIRED AFFIRMATIONS (SEE SECTION V OF PART II) WILL BE DEEMED TO BE NON-RESPONSIVE, UNLESS A FULL WAIVER OF THE PARTICIPATION GOALS IS GRANTED (SCHEDULE B, PART III). IN THE EVENT THAT THE CITY DETERMINES THAT THE BIDDER/PROPOSER HAS SUBMITTED A SCHEDULE B WHERE THE VENDOR CERTIFICATION AND REQUIRED AFFIRMATIONS ARE COMPLETED BUT OTHER ASPECTS OF THE SCHEDULE B ARE NOT COMPLETE, OR CONTAIN A COPY OR COMPUTATION ERROR THAT IS AT ODDS WITH THE VENDOR CERTIFICATION AND AFFIRMATIONS, THE BIDDER/PROPOSER WILL BE NOTIFIED BY THE AGENCY AND WILL BE GIVEN FOUR (4) CALENDAR DAYS FROM RECEIPT OF NOTIFICATION TO CURE THE SPECIFIED DEFICIENCIES AND RETURN A COMPLETED SCHEDULE B TO THE AGENCY. FAILURE TO DO SO WILL RESULT IN A DETERMINATION THAT THE BID/PROPOSAL IS NON-RESPONSIVE. RECEIPT OF NOTIFICATION IS DEFINED AS THE DATE NOTICE IS E-MAILED OR FAXED (IF THE BIDDER/PROPOSER HAS PROVIDED AN E-MAIL ADDRESS OR FAX NUMBER), OR NO LATER THAN FIVE (5) CALENDAR DAYS FROM THE DATE OF MAILING OR UPON DELIVERY, IF DELIVERED.

5. Where an **M/WBE** Utilization Plan has been submitted, the Contractor shall, within 30 days of issuance by Agency of a notice to proceed, submit a list of proposed persons or entities to which it intends to award subcontracts within the subsequent 12 months. In the case of multiyear contracts, such list shall also be submitted every year thereafter. The Agency may also require the Contractor to report periodically about the contracts awarded by its direct subcontractors to indirect subcontractors (as defined in Section 6-129(c)(22)). **PLEASE NOTE: If this Contract is a public works project subject to GML §101(5) (i.e., a contract valued at or below $3M for projects in New York City) or if the Contract is subject to a project labor agreement in accordance with Labor Law §222, and the bidder is required to identify at the time of bid submission its intended subcontractors for the Wicks trades (plumbing and gas fitting; steam heating, hot water heating, ventilating and air conditioning (HVAC); and electric wiring), the Contractor must identify all those to which it intends to award construction subcontracts for any portion of the Wicks trade work at the time of bid submission, regardless of what point in the life of the contract such subcontracts will occur. In identifying intended subcontractors in the bid submission, bidders may satisfy any Participation Goals established for this Contract by proposing one or more subcontractors that are MBEs and/or WBEs for any portion of the Wicks trade work.** In the event that the Contractor's selection of a subcontractor is disapproved, the Contractor shall have a reasonable time to propose alternate subcontractors.

6. MBE and WBE firms must be certified by DSBS in order for the Contractor to credit such firms' participation toward the attainment of the **Participation Goals**. Such certification must occur prior to the

firms' commencement of work. A list of MBE and WBE firms may be obtained from the DSBS website at www.nyc.gov/buycertified, by emailing DSBS at buyer@sbs.nyc.gov, by calling (212) 513-6356, or by visiting or writing DSBS at 110 William St., New York, New York, 10038, 7th floor. Eligible firms that have not yet been certified may contact DSBS in order to seek certification by visiting www.nyc.gov/getcertified, emailing MWBE@sbs.nyc.gov, or calling the DSBS certification helpline at (212) 513-6311. A firm that is certified as both an MBE and a WBE may be counted either toward the goal for MBEs or the goal for WBEs, but not both. No credit shall be given for participation by a graduate MBE or graduate WBE, as defined in Section 6-129(c)(20).

7. Where an **M/WBE** Utilization Plan has been submitted, the Contractor shall, with each voucher for payment, and/or periodically as Agency may require, submit statements, certified under penalty of perjury, which shall include, but not be limited to,: the total amount the Contractor paid to its direct subcontractors, and, where applicable pursuant to Section 6-129(j), the total amount direct subcontractors paid to indirect subcontractors; the names, addresses and contact numbers of each MBE or WBE hired as a subcontractor by the Contractor, and, where applicable, hired by any of the Contractor's direct subcontractors; and the dates and amounts paid to each MBE or WBE. The Contractor shall also submit, along with its voucher for final payment: the total amount it paid to subcontractors, and, where applicable pursuant to Section 6-129(j), the total amount its direct subcontractors paid directly to their indirect subcontractors; and a final list, certified under penalty of perjury, which shall include the name, address and contact information of each subcontractor that is an MBE or WBE, the work performed by, and the dates and amounts paid to each.

8. If payments made to, or work performed by, MBEs or WBEs are less than the amount specified in the Contractor's **M/WBE** Utilization Plan, Agency shall take appropriate action, in accordance with Section 6-129 and Article II below, unless the Contractor has obtained a modification of its **M/WBE** Utilization Plan in accordance with Section 6-129 and Part A, Section 11 below.

9. Where an **M/WBE** Utilization Plan has been submitted, and the Contractor requests a change order the value of which exceeds the greater of 10 percent of the Contract or Task Order, as applicable, or $500,000, Agency shall review the scope of work for the Contract or Task Order, as applicable, and the scale and types of work involved in the change order, and determine whether the **Participation Goals** should be modified.

10. Pre-award waiver of the **Participation Goals**. (a) A bidder or proposer, or contractor with respect to a Task Order, may seek a pre-award full or partial waiver of the **Participation Goals** in accordance with Section 6-129, which requests that Agency change one or more **Participation Goals** on the grounds that the **Participation Goals** are unreasonable in light of the availability of certified firms to perform the services required, or by demonstrating that it has legitimate business reasons for proposing a lower level of subcontracting in its M/WBE Utilization Plan.

(b) To apply for a full or partial waiver of the **Participation Goals**, a bidder, proposer, or contractor, as applicable, must complete Part III (Page 5) of Schedule B and submit such request no later than seven (7) calendar days prior to the date and time the bids, proposals, or Task Orders are due, in writing to the Agency by email at poped@ddc.nyc.gov or via facsimile at (718) 391-1886. Bidders, proposers, or contractors, as applicable, who have submitted requests will receive an Agency response by no later than two (2) calendar days prior to the due date for bids, proposals, or Task Orders; provided, however, that if that date would fall on a weekend or holiday, an Agency response will be provided by close-of-business on the business day before such weekend or holiday date.

(c) If the Agency determines that the **Participation Goals** are unreasonable in light of the availability of certified firms to perform the services required, it shall revise the solicitation and extend the deadline for bids and proposals, or revise the Task Order, as applicable.

(d) Agency may grant a full or partial waiver of the **Participation Goals** to a bidder, proposer or contractor, as applicable, who demonstrates—before submission of the bid, proposal or Task Order, as applicable—that it has legitimate business reasons for proposing the level of subcontracting in its **M/WBE** Utilization Plan. In making its determination, Agency shall consider factors that shall include, but not be limited to, whether the bidder, proposer or contractor, as applicable, has the capacity and the bona fide intention to perform the Contract without any subcontracting, or to perform the Contract without awarding the amount of subcontracts represented by the **Participation Goals**. In making such determination, Agency may consider whether the **M/WBE** Utilization Plan is consistent with past subcontracting practices of the bidder, proposer or contractor, as applicable, whether the bidder, proposer or contractor, as applicable, has made efforts to form a joint venture with a certified firm, and whether the bidder, proposer, or contractor, as applicable, has made good faith efforts to identify other portions of the Contract that it intends to subcontract.

11. Modification of **M/WBE** Utilization Plan. (a) A Contractor may request a modification of its **M/WBE** Utilization Plan after award of this Contract. **PLEASE NOTE: If this Contract is a public works project subject to GML §101(5) (i.e., a contract valued at or below $3M for projects in New York City) or if the Contract is subject to a project labor agreement in accordance with Labor Law §222, and the bidder is required to identify at the time of bid submission its intended subcontractors for the Wicks trades (plumbing and gas fitting; steam heating, hot water heating, ventilating and air conditioning (HVAC); and electric wiring), the Contractor may request a Modification of its M/WBE Utilization Plan as part of its bid submission.** The Agency may grant a request for Modification of a Contractor's **M/WBE** Utilization Plan if it determines that the Contractor has established, with appropriate documentary and other evidence, that it made reasonable, good faith efforts to meet the **Participation Goals.** In making such determination, Agency shall consider evidence of the following efforts, as applicable, along with any other relevant factors:

(i) The Contractor advertised opportunities to participate in the Contract, where appropriate, in general circulation media, trade and professional association publications and small business media, and publications of minority and women's business organizations;
(ii) The Contractor provided notice of specific opportunities to participate in the Contract, in a timely manner, to minority and women's business organizations;
(iii) The Contractor sent written notices, by certified mail or facsimile, in a timely manner, to advise MBEs or WBEs that their interest in the Contract was solicited;
(iv) The Contractor made efforts to identify portions of the work that could be substituted for portions originally designated for participation by MBEs and/or WBEs in the M/WBE Utilization Plan, and for which the Contractor claims an inability to retain MBEs or WBEs;
(v) The Contractor held meetings with MBEs and/or WBEs prior to the date their bids or proposals were due, for the purpose of explaining in detail the scope and requirements of the work for which their bids or proposals were solicited;
(vi) The Contractor made efforts to negotiate with MBEs and/or WBEs as relevant to perform specific subcontracts, or act as suppliers or service providers;
(vii) Timely written requests for assistance made by the Contractor to Agency's M/WBE liaison officer and to DSBS;
(viii) Description of how recommendations made by DSBS and Agency were acted upon and an explanation of why action upon such recommendations did not lead to the desired level of participation of MBEs and/or WBEs.

Agency's M/WBE officer shall provide written notice to the Contractor of the determination.

(b) The Agency may modify the **Participation Goals** when the scope of the work has been changed by the Agency in a manner that affects the scale and types of work that the Contractor indicated in its **M/WBE** Utilization Plan would be awarded to subcontractors.

12. If this Contract is for an indefinite quantity of construction, standard or professional services or is a requirements type contract and the Contractor has submitted an **M/WBE** Utilization Plan and has committed to subcontract work to MBEs and/or WBEs in order to meet the **Participation Goals**, the Contractor will not be deemed in violation of the M/WBE Program requirements for this Contract with regard to any work which was intended to be subcontracted to an MBE and/or WBE to the extent that the Agency has determined that such work is not needed.

13. If **Participation Goals** have been established for this Contract or a Task Order issued pursuant to this Contract, at least once annually during the term of the Contract or Task Order, as applicable, Agency shall review the Contractor's progress toward attainment of its M/WBE Utilization Plan, including but not limited to, by reviewing the percentage of work the Contractor has actually awarded to MBE and/or WBE subcontractors and the payments the Contractor made to such subcontractors.

14. If **Participation Goals** have been established for this Contract or a Task Order issued pursuant to this Contract, Agency shall evaluate and assess the Contractor's performance in meeting those goals, and such evaluation and assessment shall become part of the Contractor's overall contract performance evaluation.

PART B: MISCELLANEOUS

1. The Contractor shall take notice that, if this solicitation requires the establishment of an **M/WBE** Utilization Plan, the resulting contract may be audited by DSBS to determine compliance with Section 6-129. See §6-129(e)(10). Furthermore, such resulting contract may also be examined by the City's Comptroller to assess compliance with the **M/WBE** Utilization Plan.

2. Pursuant to DSBS rules, construction contracts that include a requirement for an **M/WBE** Utilization Plan shall not be subject to the law governing Locally Based Enterprises set forth in Section 6-108.1 of the Administrative Code of the City of New York.

3. DSBS is available to assist contractors and potential contractors in determining the availability of MBEs and/or WBEs to participate as subcontractors, and in identifying opportunities that are appropriate for participation by MBEs and/or WBEs in contracts.

4. Prospective contractors are encouraged to enter into qualified joint venture agreements with MBEs and/or WBEs as defined by Section 6-129(c)(30).

5. By submitting a bid or proposal the Contractor hereby acknowledges its understanding of the M/WBE Program requirements set forth herein and the pertinent provisions of Section 6-129, and any rules promulgated thereunder, and if awarded this Contract, the Contractor hereby agrees to comply with the M/WBE Program requirements of this Contract and pertinent provisions of Section 6-129, and any rules promulgated thereunder, all of which shall be deemed to be material terms of this Contract. The Contractor hereby agrees to make all reasonable, good faith efforts to solicit and obtain the participation of MBEs and/or WBEs to meet the required **Participation Goals**.

ARTICLE II. ENFORCEMENT

1. If Agency determines that a bidder or proposer, as applicable, has, in relation to this procurement, violated Section 6-129 or the DSBS rules promulgated pursuant to Section 6-129, Agency may disqualify such bidder or proposer, as applicable, from competing for this Contract and the Agency may revoke such bidder's or proposer's prequalification status, if applicable.

2. Whenever Agency believes that the Contractor or a subcontractor is not in compliance with Section 6-129 or the DSBS rules promulgated pursuant to Section 6-129, or any provision of this Contract that implements Section 6-129, including, but not limited to any **M/WBE** Utilization Plan, Agency shall send a written notice to the Contractor describing the alleged noncompliance and offering the Contractor an opportunity to be heard. Agency shall then conduct an investigation to determine whether such Contractor or subcontractor is in compliance.

3. In the event that the Contractor has been found to have violated Section 6-129, the DSBS rules promulgated pursuant to Section 6-129, or any provision of this Contract that implements Section 6-129, including, but not limited to, any **M/WBE** Utilization Plan, Agency may determine that one of the following actions should be taken:

(a) entering into an agreement with the Contractor allowing the Contractor to cure the violation;
(b) revoking the Contractor's pre-qualification to bid or make proposals for future contracts;
(c) making a finding that the Contractor is in default of the Contract;
(d) terminating the Contract;
(e) declaring the Contractor to be in breach of Contract;
(f) withholding payment or reimbursement;
(g) determining not to renew the Contract;
(h) assessing actual and consequential damages;
(i) assessing liquidated damages or reducing fees, provided that liquidated damages may be based on amounts representing costs of delays in carrying out the purposes of the M/WBE Program, or in meeting the purposes of the Contract, the costs of meeting utilization goals through additional procurements, the administrative costs of investigation and enforcement, or other factors set forth in the Contract;
(j) exercising rights under the Contract to procure goods, services or construction from another contractor and charge the cost of such contract to the Contractor that has been found to be in noncompliance; or
(k) taking any other appropriate remedy.

4. If an **M/WBE** Utilization Plan has been submitted, and pursuant to this Article II, Section 3, the Contractor has been found to have failed to fulfill its **Participation Goals** contained in its **M/WBE** Utilization Plan or the **Participation Goals** as modified by Agency pursuant to Article I, Part A, Section 11, Agency may assess liquidated damages in the amount of ten percent (10%) of the difference between the dollar amount of work required to be awarded to MBE and/or WBE firms to meet the **Participation Goals** and the dollar amount the Contractor actually awarded and paid, and/or credited, to MBE and/or WBE firms. In view of the difficulty of accurately ascertaining the loss which the City will suffer by reason of Contractor's failure to meet the **Participation Goals**, the foregoing amount is hereby fixed and agreed as the liquidated damages that the City will suffer by reason of such failure, and not as a penalty. Agency may deduct and retain out of any monies which may become due under this Contract the amount of any such liquidated damages; and in case the amount which may become due under this Contract shall be less than the amount of liquidated damages suffered by the City, the Contractor shall be liable to pay the difference.

5. Whenever Agency has reason to believe that an MBE and/or WBE is not qualified for certification, or is participating in a contract in a manner that does not serve a commercially useful function (as defined in Section 6-129(c)(8)), or has violated any provision of Section 6- 129, Agency shall notify the Commissioner of DSBS who shall determine whether the certification of such business enterprise should be revoked.

6. Statements made in any instrument submitted to Agency pursuant to Section 6-129 shall be submitted under penalty of perjury and any false or misleading statement or omission shall be grounds for the application of any applicable criminal and/or civil penalties for perjury. The making of a false or fraudulent statement by an MBE and/or WBE in any instrument submitted pursuant to Section 6-129 shall, in addition, be grounds for revocation of its certification.

7. The Contractor's record in implementing its **M/WBE** Utilization Plan shall be a factor in the evaluation of its performance. Whenever Agency determines that a Contractor's compliance with an **M/WBE** Utilization Plan has been unsatisfactory, Agency shall, after consultation with the City Chief Procurement Officer, file an advice of caution form for inclusion in VENDEX as caution data.

IN WITNESS WHEREOF, the Deputy Commissioner, on behalf of the City of New York, and the Contractor, have executed this agreement in quadruplicate, two parts of which are to remain with the Commissioner, another to be filed with the Comptroller of the City, and the fourth to be delivered to the Contractor.

THE CITY OF NEW YORK

By: _____
Deputy Commissioner

CONTRACTOR: NY ASPHALT INC.

By: _____
(Member of Firm or Officer of Corporation)

Title: GREEN MANAGER

(Where Contractor is a Corporation, add):
Attest:

_____
Secretary

(Seal)

_____

ACKNOWLEDGEMENT OF PRINCIPAL, IF A CORPORATION

State of New York County of Queens ss:

On this 29 day of April, 2017, before me personally came Joseph Gennetti to me known who, being by me duly sworn did depose and say that he resides at 71 Oak Ave W. Orange, NJ 07052 that he is the General Manager (CEO) of the corporation described in and which executed the foregoing instrument; that he knows the seal of said corporation; that one of the seals affixed to said instrument is such seal; that it was so affixed by order of the directors of said corporation, and that he signed his name thereto by like order.

BRENDA A. BARREIRO
Notary Public, State of New York
No. 01BA6351073
Qualified in Kings County
Commission Expires Nov. 28, 2020

Notary Public or Commissioner of Deeds

ACKNOWLEDGEMENT OF PRINCIPAL, IF A PARTNERSHIP

State of _____ County of _____ ss:

On this _____ day of _____, _____, before me personally appeared _____ to me known, and known to me to be one of the members of the firm of _____ _____ described in and who executed the foregoing instrument; and he acknowledged to me that he executed the same as and for the act and deed of said firm.

_____

Notary Public or Commissioner of Deeds

ACKNOWLEDGEMENT OF PRINCIPAL, IF AN INDIVIDUAL

State of _____ County of _____ ss:

On this _____ day of _____, _____, before me personally appeared _____ to me known, and known to me to be the person described in and who executed the foregoing instrument; and acknowledged that he executed the same.

_____

Notary Public or Commissioner of Deeds

ACKNOWLEDGEMENT BY COMMISSIONER

State of New York County of Queens ss:

On this _____ day of _____, 2017, before me personally came Eric MacFarlane to me known, and known to be the Deputy Commissioner of the Department of Design and Construction of The City of New York, the person described as such in and who as such executed the foregoing instrument and acknowledged to me that he executed the same as Deputy Commissioner for the purposes therein mentioned.

Brenda A Barreiro
Notary Public or Commissioner of Deeds

BRENDA A. BARREIRO
Notary Public, State of New York
No. 01BA6351073
Qualified in Kings County
Commission Expires Nov. 28, 2020

AUTHORITY

MAYOR'S CERTIFICATE NO. CBX DATED
BUDGET DIRECTOR'S CERTIFICATE NO. DATED

APPROPRIATION
COMMISSIONER'S CERTIFICATE

In conformity with the provisions of Section 6-101 of the Administrative Code of the City of New York, it is hereby certified that the estimated cost of the work, materials and supplies required by the within Contract, amounting to

Nineteen Million, Six Hundred Five Thousand, One Hundred Thirty 25/100

Dollars ($ 19,605,130.25

is chargeable to the fund of the Department of Design and Construction entitled Code

_____

_____

_____

Department of Design and Construction

I hereby certify that the specifications contained herein comply with the terms and conditions of the BUDGET.

Deputy Commissioner

COMPTROLLER'S CERTIFICATE

The City of New York_____

Pursuant to the provisions of Section 6-101 of the Administrative Code of the City of New York, I hereby certify that there remains unapplied and unexpended a balance of the above mentioned fund applicable to this Contract sufficient to pay the estimated expense of executing the same viz:

$_____

_____

Comptroller

MAYOR'S CERTIFICATE OR CERTIFICATE OF THE DIRECTOR OF THE BUDGET

Performance Bond #1 (Pages 92 to 95): Use if the total contract price is $5 Million Or Less. Performance Bond #1 has been approved by the U.S. Small Business Administration ("SBA") for participation in its Bond Guarantee Program.

PERFORMANCE BOND #1

KNOW ALL PERSONS BY THESE PRESENTS:,
That we, _____

_____

_____

hereinafter referred to as the "Principal,"
and, _____

_____

_____

hereinafter referred to as the "Surety" ("Sureties") are held and firmly bound to THE CITY OF NEW YORK, hereinafter referred to as the "City" or to its successors and assigns in the penal sum
of _____

_____

_____

($_____) Dollars, lawful money of the United States for the payment of which said sum of money well and truly to be made, we, and each of us, bind ourselves, our heirs, executors, administrators, successors and assigns, jointly and severally, firmly by these presents.

WHEREAS, the Principal is about to enter, or has entered, into a Contract in writing with the City for

_____

_____

a copy of which Contract is annexed to and hereby made a part of this bond as though herein set forth in full;

NOW, THEREFORE, the conditions of this obligation are such that if the Principal, his or its representatives or assigns, shall well and faithfully perform the said Contract and all modifications, amendments, additions and alterations thereto that may hereafter be made, according to its terms and its true intent and meaning, including repair and or replacement of defective work and guarantees of maintenance for the periods stated in the Contract, and shall fully indemnify and save harmless the City from all cost and damage which it may suffer by reason of the Principal's default of the Contract, and shall fully reimburse and repay the City for all outlay and expense which the City may incur in making

<u>Performance Bond #1 (Pages 92 to 95)</u>: Use if the total contract price is $5 Million Or Less. Performance Bond #1 has been approved by the U.S. Small Business Administration ("SBA") for participation in its Bond Guarantee Program.

good any such default and shall protect the said City of New York against, and pay any and all amounts, damages, cost and judgments which may or shall be recovered against said City or its officers or agents or which the said City of New York may be called upon to pay any person or corporation by reason of any damages arising or growing out of the Principal's default of the Contract, then this obligation shall be null and void, otherwise to remain in full force and effect.

The Surety (Sureties), for value received, hereby stipulates and agrees, upon written notice from the City that the City has determined that the Principal is in default of the Contract, to (1) pay the City the cost to complete the contract as determined by the City in excess of the balance of the Contract held by the City, plus any damages or costs to which the City is entitled, up to the full amount of the above penal sum, (2) fully perform and complete the Work to be performed under the Contract, pursuant to the terms, conditions, and covenants thereof, or (3) tender a completion Contractor that is acceptable to the City. The Surety (Sureties) further agrees, at its option, either to notify the City that it elects to pay the city the cost of completion plus any applicable damages and costs under option (1) above, or to commence and diligently perform the Work specified in the Contract, including physical site work, within twenty-five (25) business days after written notice thereof from the City and, if the Surety elects to fully perform and complete the Work, then to complete all Work within the time set forth in the Contract or such other time as agreed to between the City and Surety in accordance with the Contract. If the Surety elects to tender payment pursuant to (1) above, then the Surety shall tender such amount within fifteen (15) business days notification from the City of the cost of completion. The Surety and the City reserve all rights and defenses each may have against the other; provided, however, that the Surety expressly agrees that its reservation of rights shall not provide a basis for non-performance of its obligation to pay the City the cost of completion, to commence and complete all Work as provided herein, or to tender a completion contractor.

The Surety (Sureties), for value received, for itself and its successors and assigns, hereby stipulates and agrees that the obligation of said Surety (Sureties) and its bond shall be in no way impaired or affected by any extension of time, modification, omission, addition, or change in or to the said Contract or the Work to be performed thereunder, or by any payment thereunder before the time required therein, or by any waiver of any provisions thereof, or any moneys due or to become due thereunder; and said Surety (Sureties) does hereby waive notice of any and all of such extensions, modifications, omissions, additions, changes, payments, and waivers, and hereby expressly stipulates and agrees that any and all things done and omitted to be done by and in relation to subcontractors shall have the same effect as to said Surety (Sureties) as though done or omitted to be done by or in relation to said Principal. Notwithstanding the above, if the City makes payments to the Principal before the time required by the contract that in the aggregate exceed $100,000 or 10% of the Contract price, whichever is less, and that have not become earned prior to the Principal being found to be in default, then all payments made to the Principal before the time required by the Contract shall be added to the remaining contract value available to be paid for the completion of the Contract as if such sums had not been paid to the Principal, but shall not provide a basis for non-performance of its obligation to pay the City the cost of completion, to commence and to complete all Work as provided herein, or to tender a completion contractor.

<u>Performance Bond #1 (Pages 92 to 95)</u>: Use if the total contract price is $5 Million Or Less. Performance Bond #1 has been approved by the U.S. Small Business Administration ("SBA") for participation in its Bond Guarantee Program.

IN WITNESS WHEREOF, The Principal and the Surety (Sureties) have hereunto set their hands and seals, and such of them as are corporations have caused their corporate seals to be hereunto affixed and these presents to be signed by their proper officers, this

_____ day of _____, 20_____.

(Seal)

_____(L.S.)
Principal

By:_____.

(Seal)

Surety

By:_____.
_____.

(Seal)

Surety

By:_____.
_____.

(Seal)

Surety

By:_____.
_____.

(Seal)

Surety

By:_____.
_____.

(Seal)

Surety

By:_____.

Bond Premium Rate _____.

Bond Premium Cost _____.

If the Contractor (Principal) is a partnership, the bond should be signed by each of the individuals who are partners.

If the Contractor (Principal) is a corporation, the bond should be signed in its correct corporate name by a duly authorized officer, agent, or attorney-in-fact.

There should be executed an appropriate number of counterparts of the bond corresponding to the number of counterparts of the Contract.

Performance Bond #1 (Pages 92 to 95): Use if the total contract price is $5 Million Or Less. Performance Bond #1 has been approved by the U.S. Small Business Administration ("SBA") for participation in its Bond Guarantee Program.

ACKNOWLEDGMENT OF PRINCIPAL IF A CORPORATION

State of _____ County of _____ ss:

On this _____ day of _____, 20_____ before me personally came _____,
to me known, who, being by me duly sworn did depose and say that he/she resides at _____
_____; that he/she is the _____
of the corporation described in and which executed the foregoing instrument; and that he/she signed his/her name to the foregoing instrument by order of the directors of said corporation as the duly authorized and binding act thereof.

_____
Notary Public or Commissioner of Deeds.

ACKNOWLEDGMENT OF PRINCIPAL IF A PARTNERSHIP

State of _____ County of _____ ss:

On this _____ day of _____, 20 _____ before me personally came _____,
to me known, who, being by me duly sworn did dispose and say that he/she resides at _____
_____; that he/she is _____ partner of _____, a limited/general partnership existing under the laws of the State of _____, the partnership described in and which executed the foregoing instrument; and that he/she signed his/her name to the foregoing instrument as the duly authorized and binding act of said partnership.

_____
Notary Public or Commissioner of Deeds.

ACKNOWLEDGMENT OF PRINCIPAL IF AN INDIVIDUAL

State of _____ County of _____ ss:

On this _____ day of _____, 20_____ before me personally came _____,
to me known, who,.being by me duly sworn did depose and say that he/she resides at _____
_____, and that he/she is the individual whose name is subscribed to the within instrument and acknowledged to me that by his/her signature on the instrument, said individual executed the instrument.

_____
Notary Public or Commissioner of Deeds

Each executed bond should be accompanied by: (a) appropriate acknowledgments of the respective parties; (b) appropriate duly certified copy of Power of Attorney or other certificate of authority where bond is executed by agent, officer or other representative of Principal or Surety; (c) a duly certified extract from By-Laws or resolutions of Surety under which Power of Attorney or other certificate of authority of its agent, officer or representative was issued, and (d) certified copy of latest published financial statement of assets and liabilities of Surety.

* * * * * * * *

Affix Acknowledgments and Justification of Sureties.

Performance Bond #2 (Pages 96 to 99): Use if the total contract price is more than $5 Million.

PERFORMANCE BOND #2

KNOW ALL PERSONS BY THESE PRESENTS:,
That we, _____

_____

_____

hereinafter referred to as the "Principal,"
and, _____

_____

_____

hereinafter referred to as the "Surety" ("Sureties") are held and firmly bound to THE CITY OF NEW YORK, hereinafter referred to as the "City" or to its successors and assigns in the penal sum
of _____

_____

_____

($_____) Dollars, lawful money of the United States for the payment of which said sum of money well and truly to be made, we, and each of us, bind ourselves, our heirs, executors, administrators, successors and assigns, jointly and severally, firmly by these presents.

WHEREAS, the Principal is about to enter, or has entered, into a Contract in writing with the City for

_____

_____

a copy of which Contract is annexed to and hereby made a part of this bond as though herein set forth in full;

NOW, THEREFORE, the conditions of this obligation are such that if the Principal, his or its representatives or assigns, shall well and faithfully perform the said Contract and all modifications, amendments, additions and alterations thereto that may hereafter be made, according to its terms and its true intent and meaning, including repair and or replacement of defective work and guarantees of maintenance for the periods stated in the Contract, and shall fully indemnify and save harmless the City from all cost and damage which it may suffer by reason of the Principal's default of the Contract, and shall fully reimburse and repay the City for all outlay and expense which the City may incur in making

Bond No. PB11727800052

Performance Bond #2 (Pages 96 to 99): Use if the total contract price is more than $5 Million.

PERFORMANCE BOND #2

KNOW ALL PERSONS BY THESE PRESENTS:,
That we, NY Asphalt, Inc
366 Industrial Loop
Staten Island, NY 10309
hereinafter referred to as the "Principal,"
and, Philadelphia Indemnity Insurance Company
One Bala Plaza, Suite 100
Bala Cynwyd, PA 19004
hereinafter referred to as the "Surety" ("Sureties") are held and firmly bound to THE CITY OF NEW YORK, hereinafter referred to as the "City" or to its successors and assigns in the penal sum
of Nineteen Million Six Hundred Five Thousand One Hundred Thirty Dollars and Twenty Five Cents

($ 19,605,130.25) Dollars, lawful money of the United States for the payment of which said sum of money well and truly to be made, we, and each of us, bind ourselves, our heirs, executors, administrators, successors and assigns, jointly and severally, firmly by these presents.

WHEREAS, the Principal is about to enter, or has entered, into a Contract in writing with the City for FMS ID: HWXP136B E-PIN: 85017B0005001 DDC PIN: 8502016HW0061C Reconstruction of the Grand Concourse Service Roads, Etc. - Borough of the Bronx

a copy of which Contract is annexed to and hereby made a part of this bond as though herein set forth in full;

NOW, THEREFORE, the conditions of this obligation are such that if the Principal, his or its representatives or assigns, shall well and faithfully perform the said Contract and all modifications, amendments, additions and alterations thereto that may hereafter be made, according to its terms and its true intent and meaning, including repair and or replacement of defective work and guarantees of maintenance for the periods stated in the Contract, and shall fully indemnify and save harmless the City from all cost and damage which it may suffer by reason of the Principal's default of the Contract, and shall fully reimburse and repay the City for all outlay and expense which the City may incur in making

Performance Bond #2 (Pages 96 to 99): Use if the total contract price is more than $5 Million.

good any such default and shall protect the said City of New York against, and pay any and all amounts, damages, cost and judgments which may or shall be recovered against said City or its officers or agents or which the said City of New York may be called upon to pay any person or corporation by reason of any damages arising or growing out of the Principal's default of the Contract, then this obligation shall be null and void, otherwise to remain in full force and effect.

The Surety (Sureties), for value received, hereby stipulates and agrees, upon written notice from the City that the City has determined that the Principal is in default of the Contract, to either (1) pay the full amount of the above penal sum in complete discharge and exoneration of this bond and of all the liabilities of the Surety relating to this bond, or (2) fully perform and complete the Work to be performed under the Contract, pursuant to the terms, conditions, and covenants thereof. The Surety (Sureties) further agrees, at its option, either to tender the penal sum or to commence and diligently perform the Work specified in the Contract, including physical site work, within twenty-five (25) business days after written notice thereof from the City and to complete all Work within the time set forth in the Contract or such other time as agreed to between the City and Surety in accordance with the Contract. The Surety and the City reserve all rights and defenses each may have against the other; provided, however, that the Surety expressly agrees that its reservation of rights shall not provide a basis for non-performance of its obligation to commence and to complete all Work as provided herein.

The Surety (Sureties), for value received, for itself and its successors and assigns, hereby stipulates and agrees that the obligation of said Surety (Sureties) and its bond shall be in no way impaired or affected by any extension of time, modification, omission, addition, or change in or to the said Contract or the Work to be performed thereunder, or by any payment thereunder before the time required therein, or by any waiver of any provisions thereof, or by any assignment, subletting or other transfer thereof or of any Work to be performed or any moneys due or to become due thereunder; and said Surety (Sureties) does hereby waive notice of any and all of such extensions, modifications, omissions, additions, changes, payments, waivers, assignments, subcontracts and transfers, and hereby expressly stipulates and agrees that any and all things done and omitted to be done by and in relation to assignees, subcontractors, and other transferees shall have the same effect as to said Surety (Sureties) as though done or omitted to be done by or in relation to said Principal.

Performance Bond #2 (Pages 96 to 99): Use if the total contract price is more than $5 Million.

IN WITNESS WHEREOF, The Principal and the Surety (Sureties) have hereunto set their hands and seals, and such of them as are corporations have caused their corporate seals to be hereunto affixed and these presents to be signed by their proper officers, this

20th day of April 20 17.

(Seal)

NY Asphalt, Inc. (L.S.)
Principal

By: _____

(Seal)

Surety
Philadelphia Indemnity Insurance Company

By: _____
Michael Culnen, Attorney-in-Fact

(Seal)

Surety

By: _____

(Seal)

Surety

By: _____

(Seal)

Surety

By: _____

(Seal)

Surety

By: _____

Bond Premium Rate $25/20/15/10

Bond Premium Cost $211,511.00

If the Contractor (Principal) is a partnership, the bond should be signed by each of the individuals who are partners.

If the Contractor (Principal) is a corporation, the bond should be signed in its correct corporate name by a duly authorized officer, agent, or attorney-in-fact.

There should be executed an appropriate number of counterparts of the bond corresponding to the number of counterparts of the Contract.

Performance Bond #2 (Pages 96 to 99): Use if the total contract price is more than $5 Million.

ACKNOWLEDGMENT OF PRINCIPAL IF A CORPORATION

State of New York County of Richmond ss:

On this 25th day of April, 20 17 before me personally came _____,
to me known, who, being by me duly sworn did depose and say that he resides
at Colts Neck, NJ ; that he/she is the President
of the corporation described in and which executed the foregoing instrument; that he/she signed his/her name to the foregoing instrument by order of the directors of said corporation as the duly authorized and binding act thereof.

Michele Renna
Notary Public or Commissioner of Deeds.

MICHELE RENNA
NOTARY PUBLIC STATE OF NEW YORK
No. 01RE6110285
Qualified in Richmond County
My Commission Expires May 24, 20 20

ACKNOWLEDGMENT OF PRINCIPAL IF A PARTNERSHIP

State of _____ County of _____ ss:

On this _____ day of _____, 20 _____ before me personally came _____,
to me known, who, being by me duly sworn did depose and say that he/she resides
at _____

_____; that he/she is _____ partner of _____, a limited/general partnership existing under the laws of the State of _____, the partnership described in and which executed the foregoing instrument; and that he/she signed his/her name to the foregoing instrument as the duly authorized and binding act of said partnership.

_____
Notary Public or Commissioner of Deeds

ACKNOWLEDGMENT OF PRINCIPAL IF AN INDIVIDUAL

State of _____ County of _____ ss:

On this _____ day of _____, 20_____ before me personally came _____,
to me known, who, being by me duly sworn did depose and say that he/she resides
at _____

_____, and that he/she is the individual whose name is subscribed to the within instrument and acknowledged to me that by his/her signature on the instrument, said individual executed the instrument.

_____
Notary Public or Commissioner of Deeds

Each executed bond should be accompanied by: (a) appropriate acknowledgments of the respective parties; (b) appropriate duly certified copy of Power of Attorney or other certificate of authority where bond is executed by agent, officer or other representative of Principal or Surety; (c) a duly certified extract from By-Laws or resolutions of Surety under which Power of Attorney or other certificate of authority of its agent, officer or representative was issued, and (d) certified copy of latest published financial statement of assets and liabilities of Surety.

* * * * * * * *

Affix Acknowledgments and Justification of Sureties.

SURETY ACKNOWLEDGEMENT

State of **New Jersey**
SS:
County of **Essex**

On this **20th** day of **April, 2017**, before me personally comes **Michael Culnen** to me known, who, being by me duly sworn, deposes and says that he resides in **Mendham Township, NJ** that he is the Attorney-In-Fact of the **Philadelphia Indemnity Insurance Company** the Corporation described in and which executed the foregoing instrument; that he knows that seal of said corporation; that the seal affixed to the said instrument is such Corporate seal; that it was so affixed by the order of the Board of Directors of the said Corporation, and that he signed his name thereto by like order.

CATHY M KNOKE
NOTARY PUBLIC
STATE OF NEW JERSEY
ID # 50009608
MY COMMISSION EXPIRES FEB. 4, 2020

(Signature and Title of Official Taking Acknowledgement)

PHILADELPHIA INDEMNITY INSURANCE COMPANY
One Bala Plaza, Suite 100
Bala Cynwyd, PA 19004-0950

Power of Attorney

KNOW ALL PERSONS BY THESE PRESENTS: That **PHILADELPHIA INDEMNITY INSURANCE COMPANY** (the Company), a corporation organized and existing under the laws of the Commonwealth of Pennsylvania, does hereby constitute and appoint **Michael Culnen of USI Insurance Services, LLC**, its true and lawful Attorney-in-fact with full authority to execute on its behalf bonds, undertakings, recognizances and other contracts of indemnity and writings obligatory in the nature thereof, issued in the course of its business and to bind the Company thereby, in an amount not to exceed **$25,000,000.00**.

This Power of Attorney is granted and is signed and sealed by facsimile under and by the authority of the following Resolution adopted by the Board of Directors of PHILADELPHIA INDEMNITY INSURANCE COMPANY on the 14th of November, 2016.

RESOLVED: That the Board of Directors hereby authorizes the President or any Vice President of the Company: (1) Appoint Attorney(s) in Fact and authorize the Attorney(s) in Fact to execute on behalf of the Company bonds and undertakings, contracts of indemnity and other writings obligatory in the nature thereof and to attach the seal of the Company thereto; and (2) to remove, at any time, any such Attorney-in-Fact and revoke the authority given. And, be it

FURTHER RESOLVED: That the signatures of such officers and the seal of the Company may be affixed to any such Power of Attorney or certificate relating thereto by facsimile, and any such Power of Attorney so executed and certified by facsimile signatures and facsimile seal shall be valid and binding upon the Company in the future with respect to any bond or undertaking to which it is attached.

IN TESTIMONY WHEREOF, PHILADELPHIA INDEMNITY INSURANCE COMPANY HAS CAUSED THIS INSTRUMENT TO BE SIGNED AND ITS CORPORATE SEALTO BE AFFIXED BY ITS AUTHORIZED OFFICE THIS 14TH DAY OF NOVEMBER, 2016.

(Seal)

Robert D. O'Leary Jr., President & CEO
Philadelphia Indemnity Insurance Company

On this 14th day of November, 2016, before me came the individual who executed the preceding instrument, to me personally known, and being by me duly sworn said that he is the therein described and authorized officer of the **PHILADELPHIA INDEMNITY INSURANCE COMPANY**; that the seal affixed to said instrument is the Corporate seal of said Company; that the said Corporate Seal and his signature were duly affixed.

COMMONWEALTH OF PENNSYLVANIA
Notarial Seal
Nora Howard, Notary Public
Lower Merion Twp., Montgomery County
My Commission Expires Jan. 8, 2018
MEMBER, PENNSYLVANIA ASSOCIATION OF NOTARIES

Notary Public: Nora Howard

residing at: Bala Cynwyd, PA

(Notary Seal)

My commission expires: January 8, 2018

I, Edward Sayago, Corporate Secretary of PHILADELPHIA INDEMNITY INSURANCE COMPANY, do hereby certify that the foregoing resolution of the Board of Directors and this Power of Attorney issued pursuant thereto on this 14th day of November, 2016 are true and correct and are still in full force and effect. I do further certify that Robert D. O'Leary Jr., who executed the Power of Attorney as President, was on the date of execution of the attached Power of Attorney the duly elected President of PHILADELPHIA INDEMNITY INSURANCE COMPANY,

In Testimony Whereof I have subscribed my name and affixed the facsimile seal of each Company this 20th day of April , 20 17 .

Edward Sayago, Corporate Secretary
PHILADELPHIA INDEMNITY INSURANCE COMPANY

PHILADELPHIA INDEMNITY INSURANCE COMPANY

Statutory Statements of Admitted Assets, Liabilities and Capital and Surplus
(in thousands, except par value and share amounts)

Admitted Assets	As of December 31, 2015	2014
Bonds (fair value $6,007,876 and $6,153,215)	$ 5,821,420	$ 5,869,602
Preferred stocks (fair value $64,498 and $59,525)	62,617	59,413
Common stocks (cost $104,587 and $110,951)	88,259	97,616
Mortgage loans	154,042	21,402
Other invested assets (cost $194,804 and $156,141)	196,159	154,549
Derivatives	185	-
Cash, cash equivalents and short-term investments	32,936	45,054
Cash and invested assets	6,355,618	6,247,636
Premiums receivable, agents' balances and other receivables	734,983	673,590
Reinsurance receivable on paid losses	25,869	27,162
Accrued investment income	67,892	65,074
Receivable from affiliates	393	4,104
Net deferred tax asset	174,553	164,545
Other assets	2,200	106
Total admitted assets	$ 7,361,508	$ 7,182,217
Liabilities and Capital and Surplus		
Liabilities:		
Net unpaid losses and loss adjustment expenses	$ 3,514,230	$ 3,169,910
Net unearned premiums	1,342,996	1,260,065
Reinsurance payable on paid loss and loss adjustment expenses	11,618	3,747
Ceded reinsurance premiums payable	63,634	63,104
Commissions payable, contingent commissions and other similar charges	240,901	226,034
Federal income taxes payable	11,612	13,990
Accrued expenses and other liabilities	36,426	50,281
Payable to affiliates	11,824	9,877
Provision for reinsurance	554	1,000
Payable for purchased securities	80,193	46,833
Total liabilities	5,313,988	4,844,841
Capital:		
Common stock, par value of $10 per share; 1,000,000 shares authorized, 450,000 shares issued and outstanding	4,500	3,600
Surplus:		
Gross paid-in and contributed surplus	386,071	386,970
Unassigned surplus	1,656,949	1,946,806
Total surplus	2,043,020	2,333,776
Total capital and surplus	2,047,520	2,337,376
Total liabilities and capital and surplus	$ 7,361,508	$ 7,182,217

The undersigned, being duly sworn, says: That she is the Executive Vice President and Chief Financial Officer of Philadelphia Indemnity Insurance Company; that said Company is a corporation duly organized in the state of Pennsylvania, and licensed and engaged in the State of Pennsylvania and has duly complied with all the requirements of the laws of the said State applicable of the said Company and is duly qualified to act as Surety under such laws; that said Company has also complied with and is duly qualified to act as Surety under the Act of Congress. And that to the best of her knowledge and belief the above statement is a full, true and correct statement of

Attest:

Karen Gilmer-Pauciello, EVP & CFO

Sworn to before me this 6th day of June 2016.

Kimberly Kessleski, Notary

COMMONWEALTH OF PENNSYLVANIA
Notarial Seal
Kimberly A. Kessleski, Notary Public
Lower Merion Twp., Montgomery County
My Commission Expires Dec. 18, 2016
MEMBER, PENNSYLVANIA ASSOCIATION OF NOTARIES

Payment Bond (Pages 100 to 103): Use for any contract for which a Payment Bond is required.

PAYMENT BOND

KNOW ALL PERSONS BY THESE PRESENTS, That we,

NY Asphalt, Inc.
366 Industrial Loop
Staten Island, NY 10309

hereinafter referred to as the "Principal", and

Philadelphia Indemnity Insurance Company
One Bala Plaza, Suite 100
Bala Cynwyd, PA 19004

hereinafter referred to as the "Surety" ("Sureties") are held and firmly bound to THE CITY OF NEW YORK, hereinafter referred to as the "City" or to its successors and assigns, in the penal sum of

Nineteen Million Six Hundred Five Thousand One Hundred Thirty Dollars and Twenty Five Cents

($19,605,130.25) Dollars, lawful money of the United States, for the payment of which said sum of money well and truly to be made, we, and each of us, bind ourselves, our heirs, executors, administrators, successors and assigns, jointly and severally, firmly by these presents.

WHEREAS, the Principal is about to enter, or has entered, into a Contract in writing with the City for

FMS ID: HWXP136B E-PIN: 85017B0005001 DDC PIN: 8502016HW0061C
Reconstruction of the Grand Concourse Service Roads, Etc. - Borough of the Bronx

a copy of which Contract is annexed to and hereby made a part of this bond as though herein set forth in full;

NOW, THEREFORE, the conditions of this obligation are such that if the Principal, his or its representatives or assigns and other Subcontractors to whom Work under this Contract is sublet and his or their successors and assigns shall promptly pay or cause to be paid all lawful claims for

(a) Wages and compensation for labor performed and services rendered by all persons engaged in the prosecution of the Work under said Contract, and any amendment or extension thereof or addition thereto, whether such persons be agents servants or employees of the Principal or any such Subcontractor, including all persons so engaged who perform the work of laborers or mechanics at or in the vicinity of the site

Payment Bond (Pages 100 to 103): Use for any contract for which a Payment Bond is required.

of the Project regardless of any contractual relationship between the Principal or such Subcontractors, or his or their successors or assigns, on the one hand and such laborers or mechanics on the other, but not including office employees not regularly stationed at the site of the project; and

(b) Materials and supplies (whether incorporated in the permanent structure or not), as well as teams, fuels, oils, implements or machinery furnished, used or consumed by said Principal or any subcontractor at or in the vicinity of the site of the Project in the prosecution of the Work under said Contract and any amendment or extension thereof or addition thereto; then this obligation shall be void, otherwise to remain in full force and effect.

This bond is subject to the following additional conditions, limitations and agreements:

(a) The Principal and Surety (Sureties) agree that this bond shall be for the benefit of any materialmen or laborer having a just claim, as well as the City itself.

(b) All persons who have performed labor, rendered services or furnished materials and supplies, as aforesaid, shall have a direct right of action against the Principal and his, its or their successors and assigns, and the Surety (Sureties) herein, or against either or both or any of them and their successors and assigns. Such persons may sue in their own name, and may prosecute the suit to judgment and execution without the necessity of joining with any other persons as party plaintiff.

(c) The Principal and Surety (Sureties) agree that neither of them will hold the City liable for any judgment for costs of otherwise, obtained by either or both of them against a laborer or materialman in a suit brought by either a laborer or materialman under this bond for moneys allegedly due for performing work or furnishing material.

(d) The Surety (Sureties) or its successors and assigns shall not be liable for any compensation recoverable by an employee or laborer under the Workmen's Compensation Law.

(e) In no event shall the Surety (Sureties), or its successors or assigns, be liable for a greater sum than the penalty of this bond or be subject to any suit, action or proceeding hereon that is instituted by any person, firm, or corporation hereunder later than two years after the complete performance of said Contract and final settlement thereof.

The Principal, for himself and his successors and assigns, and the Surety (Sureties), for itself and its successors and assigns, do hereby expressly waive any objection that might be interposed as to the right of the City to require a bond containing the foregoing provisions, and they do hereby further expressly waive any defense which they or either of them might interpose to an action brought hereon by any person, firm or corporation, including subcontractors, materialmen and third persons, for work, labor, services, supplies or material performed rendered, or furnished as aforesaid upon the ground that there is no law authorizing the City to require the foregoing provisions to be place in this bond.

And the Surety (Sureties), for value received, for itself and its successors and assigns, hereby stipulates and agrees that the obligation of said Surety (Sureties), and its bonds shall be in no way impaired or affected by any extension of time, modification, omission, addition, or change in or of the said Contract or the work to be performed thereunder, or by any payment thereunder before the time required therein, or by any waiver of any provisions thereof, or by any assignment, subletting or other transfer thereof or of any part thereof, or of any Work to be performed, or any moneys due to become due thereunder and said Surety (Sureties) does hereby waive notice of any and all of such extensions, modifications, omissions, additions, changes, payments, waivers, assignments, subcontracts and transfers, and hereby expressly stipulates and agrees that any and all things done and omitted to be done by and in relation to assignees, Subcontractors, and other transferees shall have the same effect as to said Surety (Sureties) as though done or omitted to be done or in relation to said Principal.

Payment Bond (Pages 100 to 103): Use for any contract for which a Payment Bond is required.

IN WITNESS WHEREOF, the Principal and the Surety (Sureties) have hereunto set their hands and seals, and such of them as are corporations have caused their corporate seals to be hereunto affixed and these presents to be signed by their proper officers, this 20th day of April, 2017.

(Seal) NY Asphalt, Inc. (L.S.)
Principal

By: _____

(Seal) Philadelphia Indemnity Insurance Company
Surety

By: _____
Michael Culnen, Attorney-in-fact

(Seal) _____
Surety

By: _____

(Seal) _____
Surety

By: _____

(Seal) _____
Surety

By: _____

If the Contractor (Principal) is a partnership, the bond should be signed by each of the individuals who are partners.

If the Contractor (Principal) is a corporation, the bond should be signed in its correct corporate name by a duly authorized officer, agent, or attorney-in-fact.

There should be executed an appropriate number of counterparts of the bond corresponding to the number of counterparts of the Contract.

Payment Bond (Pages 100 to 103): Use for any contract for which a Payment Bond is required.

ACKNOWLEDGMENT OF PRINCIPAL, IF A CORPORATION

State of New York County of Richmond ss:

On this 25th day of April, 2017, before me personally came Michael Thompson to me known, who, being by me duly sworn did depose and say that he resides at Colts Neck, NJ that he is the President of the corporation described in and which executed the foregoing instrument; that he knows the seal of said corporation; that one of the seals affixed to said instrument is such seal; that it was so affixed by order of the directors of said corporation, and that he signed his name thereto by like order.

Michele Renna
Notary Public or Commissioner of Deeds

MICHELE RENNA
NOTARY PUBLIC STATE OF NEW YORK
No. 01RE6110285
Qualified in Richmond County
My Commission Expires May 24, 2020

ACKNOWLEDGMENT OF PRINCIPAL, IF A PARTNERSHIP

State of _____ County of _____ ss:

On this _____ day of _____, _____, before me personally appeared _____ to me known, and known to me to be one of the members of the firm of _____ described in and who executed the foregoing instrument; and he acknowledged to me that he executed the same as and for the act and deed of said firm.

_____
Notary Public or Commissioner of Deeds

ACKNOWLEDGMENT OF PRINCIPAL, IF AN INDIVIDUAL

State of _____ County of _____ ss:

On this _____ day of _____, _____, before me personally appeared _____ to me known, and known to me to be the person described in and who executed the foregoing instrument; and acknowledged that he executed the same.

_____
Notary Public or Commissioner of Deeds

Each executed bond should be accompanied by: (a) appropriate acknowledgments of the respective parties; (b) appropriate duly certified copy of Power of Attorney or other certificate of authority where bond is executed by agent, officer or other representative of Principal or Surety; (c) a duly certified extract from By-Laws or resolutions of Surety under which Power of Attorney or other certificate of authority of its agent, officer or representative was issued, and (d) certified copy of latest published financial statement of assets and liabilities of Surety.

* * * * * * * *

Affix Acknowledgments and Justification of Sureties.

SURETY ACKNOWLEDGEMENT

State of **New Jersey**
SS:
County of **Essex**

On this **20th** day of **April, 2017**, before me personally comes **Michael Culnen** to me known, who, being by me duly sworn, deposes and says that he resides in **Mendham Township, NJ** that he is the Attorney-In-Fact of the **Philadelphia Indemnity Insurance Company** the Corporation described in and which executed the foregoing instrument; that he knows that seal of said corporation; that the seal affixed to the said instrument is such Corporate seal; that it was so affixed by the order of the Board of Directors of the said Corporation, and that he signed his name thereto by like order.

CATHY M KNOKE
NOTARY PUBLIC
STATE OF NEW JERSEY
ID # 50009608
MY COMMISSION EXPIRES FEB. 4, 2020

(Signature and Title of Official Taking Acknowledgement)

PHILADELPHIA INDEMNITY INSURANCE COMPANY
One Bala Plaza, Suite 100
Bala Cynwyd, PA 19004-0950

Power of Attorney

KNOW ALL PERSONS BY THESE PRESENTS: That **PHILADELPHIA INDEMNITY INSURANCE COMPANY** (the Company), a corporation organized and existing under the laws of the Commonwealth of Pennsylvania, does hereby constitute and appoint **Michael Culnen of USI Insurance Services, LLC**, its true and lawful Attorney-in-fact with full authority to execute on its behalf bonds, undertakings, recognizances and other contracts of indemnity and writings obligatory in the nature thereof, issued in the course of its business and to bind the Company thereby, in an amount not to exceed **$25,000,000.00**.

This Power of Attorney is granted and is signed and sealed by facsimile under and by the authority of the following Resolution adopted by the Board of Directors of PHILADELPHIA INDEMNITY INSURANCE COMPANY on the 14th of November, 2016.

RESOLVED: That the Board of Directors hereby authorizes the President or any Vice President of the Company: (1) Appoint Attorney(s) in Fact and authorize the Attorney(s) in Fact to execute on behalf of the Company bonds and undertakings, contracts of indemnity and other writings obligatory in the nature thereof and to attach the seal of the Company thereto; and (2) to remove, at any time, any such Attorney-in-Fact and revoke the authority given. And, be it

FURTHER RESOLVED: That the signatures of such officers and the seal of the Company may be affixed to any such Power of Attorney or certificate relating thereto by facsimile, and any such Power of Attorney so executed and certified by facsimile signatures and facsimile seal shall be valid and binding upon the Company in the future with respect to any bond or undertaking to which it is attached.

IN TESTIMONY WHEREOF, PHILADELPHIA INDEMNITY INSURANCE COMPANY HAS CAUSED THIS INSTRUMENT TO BE SIGNED AND ITS CORPORATE SEALTO BE AFFIXED BY ITS AUTHORIZED OFFICE THIS 14TH DAY OF NOVEMBER, 2016.

(Seal)

Robert D. O'Leary Jr., President & CEO
Philadelphia Indemnity Insurance Company

On this 14th day of November, 2016, before me came the individual who executed the preceding instrument, to me personally known, and being by me duly sworn said that he is the therein described and authorized officer of the **PHILADELPHIA INDEMNITY INSURANCE COMPANY**; that the seal affixed to said instrument is the Corporate seal of said Company; that the said Corporate Seal and his signature were duly affixed.

COMMONWEALTH OF PENNSYLVANIA
Notarial Seal
Nora Howard, Notary Public
Lower Merion Twp., Montgomery County
My Commission Expires Jan. 8, 2018
MEMBER, PENNSYLVANIA ASSOCIATION OF NOTARIES

Notary Public: Nora Howard

residing at: Bala Cynwyd, PA

(Notary Seal)

My commission expires: January 8, 2018

I, Edward Sayago, Corporate Secretary of PHILADELPHIA INDEMNITY INSURANCE COMPANY, do hereby certify that the foregoing resolution of the Board of Directors and this Power of Attorney issued pursuant thereto on this 14th day of November, 2016 are true and correct and are still in full force and effect. I do further certify that Robert D. O'Leary Jr., who executed the Power of Attorney as President, was on the date of execution of the attached Power of Attorney the duly elected President of PHILADELPHIA INDEMNITY INSURANCE COMPANY,

In Testimony Whereof I have subscribed my name and affixed the facsimile seal of each Company this 20th day of April ,20 17 .

Edward Sayago, Corporate Secretary
PHILADELPHIA INDEMNITY INSURANCE COMPANY

PHILADELPHIA INDEMNITY INSURANCE COMPANY

Statutory Statements of Admitted Assets, Liabilities and Capital and Surplus
(in thousands, except par value and share amounts)

Admitted Assets	As of December 31, 2015	2014
Bonds (fair value $6,007,876 and $6,153,215)	$ 5,821,420	$ 5,869,602
Preferred stocks (fair value $64,498 and $59,525)	62,617	59,413
Common stocks (cost $104,587 and $110,951)	88,259	97,616
Mortgage loans	154,042	21,402
Other invested assets (cost $194,804 and $156,141)	196,159	154,549
Derivatives	185	-
Cash, cash equivalents and short-term investments	32,936	45,054
Cash and invested assets	6,355,618	6,247,636
Premiums receivable, agents' balances and other receivables	734,983	673,590
Reinsurance receivable on paid losses	25,869	27,162
Accrued investment income	67,892	65,074
Receivable from affiliates	393	4,104
Net deferred tax asset	174,553	164,545
Other assets	2,200	106
Total admitted assets	$ 7,361,508	$ 7,182,217

Liabilities and Capital and Surplus		
Liabilities:		
Net unpaid losses and loss adjustment expenses	$ 3,514,230	$ 3,169,910
Net unearned premiums	1,342,996	1,260,065
Reinsurance payable on paid loss and loss adjustment expenses	11,618	3,747
Ceded reinsurance premiums payable	63,634	63,104
Commissions payable, contingent commissions and other similar charges	240,901	226,034
Federal income taxes payable	11,612	13,990
Accrued expenses and other liabilities	36,426	50,281
Payable to affiliates	11,824	9,877
Provision for reinsurance	554	1,000
Payable for purchased securities	80,193	46,833
Total liabilities	5,313,988	4,844,841
Capital:		
Common stock, par value of $10 per share; 1,000,000 shares authorized, 450,000 shares issued and outstanding	4,500	3,600
Surplus:		
Gross paid-in and contributed surplus	386,071	386,970
Unassigned surplus	1,656,949	1,946,806
Total surplus	2,043,020	2,333,776
Total capital and surplus	2,047,520	2,337,376
Total liabilities and capital and surplus	$ 7,361,508	$ 7,182,217

The undersigned, being duly sworn, says: That she is the Executive Vice President and Chief Financial Officer of Philadelphia Indemnity Insurance Company; that said Company is a corporation duly organized in the state of Pennsylvania, and licensed and engaged in the State of Pennsylvania and has duly complied with all the requirements of the laws of the said State applicable of the said Company and is duly qualified to act as Surety under such laws; that said Company has also complied with and is duly qualified to act as Surety under the Act of Congress. And that to the best of her knowledge and belief the above statement is a full, true and correct statement of

Attest:

Karen Gilmer-Pauciello, EVP & CFO

Sworn to before me this 6th day of June 2016.

Kimberly Kessleski, Notary

COMMONWEALTH OF PENNSYLVANIA
Notarial Seal
Kimberly A. Kessleski, Notary Public
Lower Merion Twp., Montgomery County
My Commission Expires Dec. 18, 2016
MEMBER, PENNSYLVANIA ASSOCIATION OF NOTARIES

Client#: 1331925 NYASPHAL

ACORD™ CERTIFICATE OF LIABILITY INSURANCE

DATE (MM/DD/YYYY) 4/17/2017

THIS CERTIFICATE IS ISSUED AS A MATTER OF INFORMATION ONLY AND CONFERS NO RIGHTS UPON THE CERTIFICATE HOLDER. THIS CERTIFICATE DOES NOT AFFIRMATIVELY OR NEGATIVELY AMEND, EXTEND OR ALTER THE COVERAGE AFFORDED BY THE POLICIES BELOW. THIS CERTIFICATE OF INSURANCE DOES NOT CONSTITUTE A CONTRACT BETWEEN THE ISSUING INSURER(S), AUTHORIZED REPRESENTATIVE OR PRODUCER, AND THE CERTIFICATE HOLDER.

IMPORTANT: If the certificate holder is an ADDITIONAL INSURED, the policy(ies) must be endorsed. If SUBROGATION IS WAIVED, subject to the terms and conditions of the policy, certain policies may require an endorsement. A statement on this certificate does not confer rights to the certificate holder in lieu of such endorsement(s).

PRODUCER	CONTACT NAME: Katlen M. Yesse
USI Insurance Svcs - KORE CL 300 Executive Drive West Orange, NJ 07052 973 965-3100	PHONE (A/C, No, Ext): 973 965-3100 FAX (A/C, No): 610 537-2349 E-MAIL ADDRESS: katlen.yesse@usi.com

INSURED	INSURER(S) AFFORDING COVERAGE	NAIC #
NY Asphalt Inc. 366 Industrial Loop Staten Island, NY 10309	INSURER A : Travelers Indemnity Company	25658
	INSURER B : American Guarantee Insurance Co	35521
	INSURER C : Travelers Property Cas. Co. of	25674
	INSURER D : State Insurance Fund of NY	36102
	INSURER E : Shelterpointe Life Insurance	89958
	INSURER F :	

COVERAGES **CERTIFICATE NUMBER:** **REVISION NUMBER:**

THIS IS TO CERTIFY THAT THE POLICIES OF INSURANCE LISTED BELOW HAVE BEEN ISSUED TO THE INSURED NAMED ABOVE FOR THE POLICY PERIOD INDICATED. NOTWITHSTANDING ANY REQUIREMENT, TERM OR CONDITION OF ANY CONTRACT OR OTHER DOCUMENT WITH RESPECT TO WHICH THIS CERTIFICATE MAY BE ISSUED OR MAY PERTAIN, THE INSURANCE AFFORDED BY THE POLICIES DESCRIBED HEREIN IS SUBJECT TO ALL THE TERMS, EXCLUSIONS AND CONDITIONS OF SUCH POLICIES. LIMITS SHOWN MAY HAVE BEEN REDUCED BY PAID CLAIMS.

INSR LTR	TYPE OF INSURANCE	ADDL INSR	SUBR WVD	POLICY NUMBER	POLICY EFF (MM/DD/YYYY)	POLICY EXP (MM/DD/YYYY)	LIMITS	
A	X COMMERCIAL GENERAL LIABILITY CLAIMS-MADE X OCCUR GEN'L AGGREGATE LIMIT APPLIES PER: POLICY X PRO-JECT LOC OTHER:			DTCO4E994634IND17	03/10/2017	03/10/2018	EACH OCCURRENCE DAMAGE TO RENTED PREMISES (Ea occurrence) MED EXP (Any one person) PERSONAL & ADV INJURY GENERAL AGGREGATE PRODUCTS - COMP/OP AGG 	$1,000,000 $300,000 $5,000 $1,000,000 $2,000,000 $2,000,000 $
A	AUTOMOBILE LIABILITY X ANY AUTO ALL OWNED AUTOS SCHEDULED AUTOS X HIRED AUTOS X NON-OWNED AUTOS			DT8104E994634IND17	03/10/2017	03/10/2018	COMBINED SINGLE LIMIT (Ea accident) BODILY INJURY (Per person) BODILY INJURY (Per accident) PROPERTY DAMAGE (Per accident) 	$1,000,000 $ $ $ $
B A	X UMBRELLA LIAB X OCCUR X EXCESS LIAB X CLAIMS-MADE DED X RETENTION $10,000			AEC019100601 DTSMCUP2J3427IND	03/10/2017 03/10/2017	03/10/2018 03/10/2018	EACH OCCURRENCE AGGREGATE 	$15,000,000 $15,000,000 $
C D	WORKERS COMPENSATION AND EMPLOYERS' LIABILITY ANY PROPRIETOR/PARTNER/EXECUTIVE OFFICER/MEMBER EXCLUDED? Y/N N (Mandatory in NH) If yes, describe under DESCRIPTION OF OPERATIONS below	N/A		DTJUB7F31022917 23835747	03/10/2017 04/01/2017	03/10/2018 04/01/2018	X PER STATUTE OTH-ER E.L. EACH ACCIDENT E.L. DISEASE - EA EMPLOYEE E.L. DISEASE - POLICY LIMIT	 $1,000,000 $1,000,000 $1,000,000
E	NY Disabilty			DBL5929055	04/15/2016	Continuous	Statutory Limits	

DESCRIPTION OF OPERATIONS / LOCATIONS / VEHICLES (ACORD 101, Additional Remarks Schedule, may be attached if more space is required)

RE: Project ID: HWXP136B, E-PIN: 85017B0005001, DDC PIN: 8502016HW0061C. Reconstruction of the Grand Concourse Service Road, Etc - Borough of Bronx.
The General Liability, Commercial Auto & Umbrella policy(s) includes an automatic Additional Insured
(See Attached Descriptions)

CERTIFICATE HOLDER

New York City Department of
Design & Construction
30-30 Thomson Avenue
Long Island City, NY 11101

CANCELLATION

SHOULD ANY OF THE ABOVE DESCRIBED POLICIES BE CANCELLED BEFORE THE EXPIRATION DATE THEREOF, NOTICE WILL BE DELIVERED IN ACCORDANCE WITH THE POLICY PROVISIONS.

AUTHORIZED REPRESENTATIVE

© 1988-2014 ACORD CORPORATION. All rights reserved.

The ACORD name and logo are registered marks of ACORD

KMYCL

DESCRIPTIONS (Continued from Page 1)

endorsement that provides Additional Insured status to the Certificate Holder; City of New York, including its officials and employees; The New York City Transit Authority (NYCTA), Manhattan and Bronx Surface Transit Operation Authority (MaBSTOA); Staten Island Rapid Transit Operation Authority (SIRTOA); Metropolitan Transportation Authority (MTA), its subsidiaries and affiliated companies; New York State, including its officials and employees; FHWA, including its officials and employees; Consolidated Edison only when there is a written contract that requires such status, and only with regard to work performed on behalf of the named insured. The policy(s) includes an endorsement providing that 30 days notice of cancellation will be given to the Certificate Holder by the Insurance Carrier.

NYSIF **New York State Insurance Fund**

Workers' Compensation & Disability Benefits Specialists Since 1914

199 CHURCH STREET, NEW YORK, N.Y. 10007-1100

CERTIFICATE OF WORKERS' COMPENSATION INSURANCE (RENEWED)

^^^^^^ 134110973
LOVELL SAFETY MGMT CO., LLC
110 WILLIAM STREET 12TH FLR
NEW YORK NY 10038

Scan to Validate

POLICYHOLDER	CERTIFICATE HOLDER
NY ASPHALT INC 366 INDUSTRIAL LOOP STATEN ISLAND NY 10309	NEW YORK CITY DEPARTMENT OF DESIGN & CONSTRUCTION (DDC) 30-30 THOMSON AVE, 4TH FLOOR LONG ISLAND CITY NY 11101

POLICY NUMBER	CERTIFICATE NUMBER	POLICY PERIOD	DATE
G2383 574-7	137197	04/01/2017 TO 04/01/2018	3/9/2017

THIS IS TO CERTIFY THAT THE POLICYHOLDER NAMED ABOVE IS INSURED WITH THE NEW YORK STATE INSURANCE FUND UNDER POLICY NO. 2383 574-7, COVERING THE ENTIRE OBLIGATION OF THIS POLICYHOLDER FOR WORKERS' COMPENSATION UNDER THE NEW YORK WORKERS' COMPENSATION LAW WITH RESPECT TO ALL OPERATIONS IN THE STATE OF NEW YORK, EXCEPT AS INDICATED BELOW.

IF YOU WISH TO RECEIVE NOTIFICATIONS REGARDING SAID POLICY, INCLUDING ANY NOTIFICATION OF CANCELLATIONS, OR TO VALIDATE THIS CERTIFICATE, VISIT OUR WEBSITE AT HTTPS://WWW.NYSIF.COM/CERT/CERTVAL.ASP. THE NEW YORK STATE INSURANCE FUND IS NOT LIABLE IN THE EVENT OF FAILURE TO GIVE SUCH NOTIFICATIONS.

THIS POLICY DOES NOT COVER CLAIMS OR SUITS THAT ARISE FROM BODILY INJURY SUFFERED BY THE OFFICERS OF THE INSURED CORPORATION.

PRESIDENT
MICHAEL THOMPSON
SOLE E/O OF CIRCLE LINE
EQUIPMENT INC

THIS CERTIFICATE IS ISSUED AS A MATTER OF INFORMATION ONLY AND CONFERS NO RIGHTS NOR INSURANCE COVERAGE UPON THE CERTIFICATE HOLDER. THIS CERTIFICATE DOES NOT AMEND, EXTEND OR ALTER THE COVERAGE AFFORDED BY THE POLICY.

NEW YORK STATE INSURANCE FUND

Sherwin Taylor

DIRECTOR,INSURANCE FUND UNDERWRITING

VALIDATION NUMBER: 354797601

U-26.3

Project ID.: HWXP136B

CERTIFICATION BY INSURANCE BROKER OR AGENT

The undersigned insurance broker represents to the City of New York that the attached Certificate of Insurance is accurate in all material respects.

USI Insurance Services, LLC
[Name of broker or agent (typewritten)]

300 Executive Drive, West Orange, NJ 07052
[Address of broker or agent (typewritten)]

katlen.yesse@usi.com
[Email address of broker or agent (typewritten)]

973-965-3166/610-537-4508
[Phone number/Fax number of broker or agent (typewritten)]

[Signature of authorized official, broker, or agent]

Michael Culnen, Broker
[Name and title of authorized official, broker, or agent (typewritten)]

State of New Jersey.....)
) ss.:
County of ...Essex.....)

Sworn to before me this 17th day of April, 20 17

NOTARY PUBLIC FOR THE STATE OF New Jersey

CORYNNE ALBERTSON
NOTARY PUBLIC OF NEW JERSEY
ID # 50012153
My Commission Expires 3/18/2020

NEW YORK STATE | Workers' Compensation Board

CERTIFICATE OF INSURANCE COVERAGE UNDER THE NYS DISABILITY BENEFITS LAW

PART 1. To be completed by Disability Benefits Carrier or Licensed Insurance Agent of that Carrier

1a. Legal Name & Address of Insured (use street address only) NY ASPHALT, INC. 366 INDUSTRIAL LOOP STATEN ISLAND, NY 10309-1110 Work Location of Insured *(Only required if coverage is specifically limited to certain locations in New York State, i.e., a Wrap-Up Policy)*	1b. Business Telephone Number of Insured (718) 966-6466 1c. NYS Unemployment Insurance Employer Registration Number of Insured 4945872 1d. Federal Employer Identification Number of Insured or Social Security Number 134-11-0973
2. Name and Address of Entity Requesting Proof of Coverage (Entity Being Listed as the Certificate Holder) NYC DEPT OF DESIGN & CONSTRUCTION DIRECTOR - INSURANCE RISK MANAGER 30-30 THOMPSON AVE, 4th FLOOR LONG ISLAND CITY, NY 11101	3a. Name of Insurance Carrier NEW YORK STATE INSURANCE FUND 3b. Policy Number of Entity Listed in Box "1a" DBL 5929 05-5 3c. Policy effective period 04/15/2017 to 04/15/2018

4. Policy covers:

☒ A. All of the employer's employees eligible under the New York Disability Benefits Law

☐ B. Only the following class or classes of employer's employees:

Under penalty of perjury, I certify that I am an authorized representative or licensed agent of the insurance carrier referenced above and that the named insured has NYS Disability Benefits insurance coverage as described above.

Date Signed 04/13/2017 By Joseph J. Masi

(Signature of insurance carrier's authorized representative or NYS Licensed Insurance Agent of that insurance carrier)

Telephone Number (866) 697 - 4332 Title Director of NYSIF Disability Benefits Insurance

IMPORTANT: If Box "4a" is checked, and this form is signed by the insurance carrier's authorized representative or NYS Licensed Insurance Agent of that carrier, this certificate is COMPLETE. Mail it directly to the certificate holder.
If Box "4b" is checked, this certificate is NOT COMPLETE for purposes of Section 220, Subd. 8 of the Disability Benefits Law. It must be mailed for completion to the Workers' Compensation Board, DB Plans Acceptance Unit, 328 State Street, Schenectady, NY 12305

PART 2. To be completed by the NYS Workers' Compensation Board (Only if Box "4b" of Part 1 has been checked)

State of New York
Workers' Compensation Board

According to information maintained by the NYS Workers' Compensation Board, the above-named employer has complied with the NYS Disability Benefits Law with respect to all of his/her employees.

Date Signed _____ By _____

(Signature of NYS Workers' Compensation Board Employee)

Telephone Number _____ Title _____

Please Note: *Only insurance carriers licensed to write NYS disability benefits insurance policies and NYS licensed insurance agents of those insurance carriers are authorized to issue Form DB-120.1.* ***Insurance brokers are NOT authorized to issue this form.***

DB-120.1 (9-15)

Additional Instructions for Form DB-120.1

By signing this form, the insurance carrier identified in box "3" on this form is certifying that it is insuring the business referenced in box "1a" for disability benefits under the New York State Disability Benefits Law. The Insurance Carrier or its licensed agent will send this Certificate of Insurance to the entity listed as the certificate holder in box "2".

Will the carrier notify the certificate holder within 10 days of a policy being cancelled for non-payment of premium or within 30 days if cancelled for any other reason or if the insured is otherwise eliminated from the coverage indicated on this certificate prior to the end of the policy effective period? ☐YES ☐NO

This certificate is issued as a matter of information only and confers no rights upon the certificate holder. This certificate does not amend, extend or alter the coverage afforded by the policy listed, nor does it confer any rights or responsibilities beyond those contained in the referenced policy.

This certificate may be used as evidence of a Disability Benefits contract of insurance only while the underlying policy is in effect.

Please Note: Upon the cancellation of the disability benefits policy indicated on this form, if the business continues to be named on a permit, license or contract issued by a certificate holder, the business must provide that certificate holder with a new Certificate of NYS Disability Benefits Coverage or other authorized proof that the business is complying with the mandatory coverage requirements of the New York State Disability Benefits Law.

DISABILITY BENEFITS LAW

§220. Subd. 8

(a) The head of a state or municipal department, board, commission or office authorized or required by law to issue any permit for or in connection with any work involving the employment of employees in employment as defined in this article, and not withstanding any general or special statute requiring or authorizing the issue of such permits, shall not issue such permit unless proof duly subscribed by an insurance carrier is produced in a form satisfactory to the chair, that the payment of disability benefits for all employees has been secured as provided by this article. Nothing herein, however, shall be construed as creating any liability on the part of such state or municipal department, board, commission or office to pay any disability benefits to any such employee if so employed.

(b) The head of a state or municipal department, board, commission or office authorized or required by law to enter into any contract for or in connection with any work involving the employment of employees in employment as defined in this article and notwithstanding any general or special statute requiring or authorizing any such contract, shall not enter into any such contract unless proof duly subscribed by an insurance carrier is produced in a form satisfactory to the chair, that the payment of disability benefits for all employees has been secured as provided by this article.

Performance Bond #2 (Pages 96 to 99): Use if the total contract price is more than $5 Million.

good any such default and shall protect the said City of New York against, and pay any and all amounts, damages, cost and judgments which may or shall be recovered against said City or its officers or agents or which the said City of New York may be called upon to pay any person or corporation by reason of any damages arising or growing out of the Principal's default of the Contract, then this obligation shall be null and void, otherwise to remain in full force and effect.

The Surety (Sureties), for value received, hereby stipulates and agrees, upon written notice from the City that the City has determined that the Principal is in default of the Contract, to either (1) pay the full amount of the above penal sum in complete discharge and exoneration of this bond and of all the liabilities of the Surety relating to this bond, or (2) fully perform and complete the Work to be performed under the Contract, pursuant to the terms, conditions, and covenants thereof. The Surety (Sureties) further agrees, at its option, either to tender the penal sum or to commence and diligently perform the Work specified in the Contract, including physical site work, within twenty-five (25) business days after written notice thereof from the City and to complete all Work within the time set forth in the Contract or such other time as agreed to between the City and Surety in accordance with the Contract. The Surety and the City reserve all rights and defenses each may have against the other; provided, however, that the Surety expressly agrees that its reservation of rights shall not provide a basis for non-performance of its obligation to commence and to complete all Work as provided herein.

The Surety (Sureties), for value received, for itself and its successors and assigns, hereby stipulates and agrees that the obligation of said Surety (Sureties) and its bond shall be in no way impaired or affected by any extension of time, modification, omission, addition, or change in or to the said Contract or the Work to be performed thereunder, or by any payment thereunder before the time required therein, or by any waiver of any provisions thereof, or by any assignment, subletting or other transfer thereof or of any Work to be performed or any moneys due or to become due thereunder; and said Surety (Sureties) does hereby waive notice of any and all of such extensions, modifications, omissions, additions, changes, payments, waivers, assignments, subcontracts and transfers, and hereby expressly stipulates and agrees that any and all things done and omitted to be done by and in relation to assignees, subcontractors, and other transferees shall have the same effect as to said Surety (Sureties) as though done or omitted to be done by or in relation to said Principal.

<u>Performance Bond #2 (Pages 96 to 99)</u>: Use if the total contract price is more than $5 Million.

IN WITNESS WHEREOF, The Principal and the Surety (Sureties) have hereunto set their hands and seals, and such of them as are corporations have caused their corporate seals to be hereunto affixed and these presents to be signed by their proper officers, this

_____ day of _____ 20 _____ .

(Seal)

_____(L.S.)
Principal

By:_____.

(Seal)

Surety

By:_____.
_____.

(Seal)

Surety

By:_____.
_____.

(Seal)

Surety

By:_____.
_____.

(Seal)

Surety

By:_____.

(Seal)

Surety

By:_____.

Bond Premium Rate _____.

Bond Premium Cost _____.

If the Contractor (Principal) is a partnership, the bond should be signed by each of the individuals who are partners.

If the Contractor (Principal) is a corporation, the bond should be signed in its correct corporate name by a duly authorized officer, agent, or attorney-in-fact.

There should be executed an appropriate number of counterparts of the bond corresponding to the number of counterparts of the Contract.

Performance Bond #2 (Pages 96 to 99): Use if the total contract price is more than $5 Million.

ACKNOWLEDGMENT OF PRINCIPAL IF A CORPORATION

State of _____ County of _____ ss:

On this _____ day of _____, 20 _____ before me personally came _____,
to me known, who, being by me duly sworn did depose and say that he resides at _____
_____ ; that he/she is the _____
of the corporation described in and which executed the foregoing instrument; that he/she signed his/her name to the foregoing instrument by order of the directors of said corporation as the duly authorized and binding act thereof.

_____
Notary Public or Commissioner of Deeds.

ACKNOWLEDGMENT OF PRINCIPAL IF A PARTNERSHIP

State of _____ County of _____ ss:

On this _____ day of _____, 20 _____ before me personally came _____,
to me known, who, being by me duly sworn did depose and say that he/she resides at_____

_____; that he/she is _____ partner of _____, a limited/general partnership existing under the laws of the State of _____, the partnership described in and which executed the foregoing instrument; and that he/she signed his/her name to the foregoing instrument as the duly authorized and binding act of said partnership.

_____
Notary Public or Commissioner of Deeds

ACKNOWLEDGMENT OF PRINCIPAL IF AN INDIVIDUAL

State of _____ County of _____ ss:

On this _____ day of _____, 20_____ before me personally came _____,
to me known, who, being by me duly sworn did depose and say that he/she resides at_____
_____, and that he/she is the individual whose name is subscribed to the within instrument and acknowledged to me that by his/her signature on the instrument, said individual executed the instrument.

_____
Notary Public or Commissioner of Deeds

Each executed bond should be accompanied by: (a) appropriate acknowledgments of the respective parties; (b) appropriate duly certified copy of Power of Attorney or other certificate of authority where bond is executed by agent, officer or other representative of Principal or Surety; (c) a duly certified extract from By-Laws or resolutions of Surety under which Power of Attorney or other certificate of authority of its agent, officer or representative was issued, and (d) certified copy of latest published financial statement of assets and liabilities of Surety.

* * * * * * * *

Affix Acknowledgments and Justification of Sureties.

Payment Bond (Pages 100 to 103): Use for any contract for which a Payment Bond is required.

PAYMENT BOND

KNOW ALL PERSONS BY THESE PRESENTS, That we, _____

_____

_____

_____

hereinafter referred to as the "Principal", and _____

_____

_____

_____

_____

hereinafter referred to as the "Surety" ("Sureties") are held and firmly bound to THE CITY OF NEW YORK, hereinafter referred to as the "City" or to its successors and assigns, in the penal sum of

_____

_____

_____

($_____) Dollars, lawful money of the United States, for the payment of which said sum of money well and truly to be made, we, and each of us, bind ourselves, our heirs, executors, administrators, successors and assigns, jointly and severally, firmly by these presents.

WHEREAS, the Principal is about to enter, or has entered, into a Contract in writing with the City for

_____

_____

_____

a copy of which Contract is annexed to and hereby made a part of this bond as though herein set forth in full;

NOW, THEREFORE, the conditions of this obligation are such that if the Principal, his or its representatives or assigns and other Subcontractors to whom Work under this Contract is sublet and his or their successors and assigns shall promptly pay or cause to be paid all lawful claims for

(a) Wages and compensation for labor performed and services rendered by all persons engaged in the prosecution of the Work under said Contract, and any amendment or extension thereof or addition thereto, whether such persons be agents servants or employees of the Principal or any such Subcontractor, including all persons so engaged who perform the work of laborers or mechanics at or in the vicinity of the site

of the Project regardless of any contractual relationship between the Principal or such Subcontractors, or his or their successors or assigns, on the one hand and such laborers or mechanics on the other, but not including office employees not regularly stationed at the site of the project; and

(b) Materials and supplies (whether incorporated in the permanent structure or not), as well as teams, fuels, oils, implements or machinery furnished, used or consumed by said Principal or any subcontractor at or in the vicinity of the site of the Project in the prosecution of the Work under said Contract and any amendment or extension thereof or addition thereto; then this obligation shall be void, otherwise to remain in full force and effect.

This bond is subject to the following additional conditions, limitations and agreements:

(a) The Principal and Surety (Sureties) agree that this bond shall be for the benefit of any materialmen or laborer having a just claim, as well as the City itself.

(b) All persons who have performed labor, rendered services or furnished materials and supplies, as aforesaid, shall have a direct right of action against the Principal and his, its or their successors and assigns, and the Surety (Sureties) herein, or against either or both or any of them and their successors and assigns. Such persons may sue in their own name, and may prosecute the suit to judgment and execution without the necessity of joining with any other persons as party plaintiff.

(c) The Principal and Surety (Sureties) agree that neither of them will hold the City liable for any judgment for costs of otherwise, obtained by either or both of them against a laborer or materialman in a suit brought by either a laborer or materialman under this bond for moneys allegedly due for performing work or furnishing material.

(d) The Surety (Sureties) or its successors and assigns shall not be liable for any compensation recoverable by an employee or laborer under the Workmen's Compensation Law.

(e) In no event shall the Surety (Sureties), or its successors or assigns, be liable for a greater sum than the penalty of this bond or be subject to any suit, action or proceeding hereon that is instituted by any person, firm, or corporation hereunder later than two years after the complete performance of said Contract and final settlement thereof.

The Principal, for himself and his successors and assigns, and the Surety (Sureties), for itself and its successors and assigns, do hereby expressly waive any objection that might be interposed as to the right of the City to require a bond containing the foregoing provisions, and they do hereby further expressly waive any defense which they or either of them might interpose to an action brought hereon by any person, firm or corporation, including subcontractors, materialmen and third persons, for work, labor, services, supplies or material performed rendered, or furnished as aforesaid upon the ground that there is no law authorizing the City to require the foregoing provisions to be place in this bond.

And the Surety (Sureties), for value received, for itself and its successors and assigns, hereby stipulates and agrees that the obligation of said Surety (Sureties), and its bonds shall be in no way impaired or affected by any extension of time, modification, omission, addition, or change in or of the said Contract or the work to be performed thereunder, or by any payment thereunder before the time required therein, or by any waiver of any provisions thereof, or by any assignment, subletting or other transfer thereof or of any part thereof, or of any Work to be performed, or any moneys due to become due thereunder and said Surety (Sureties) does hereby waive notice of any and all of such extensions, modifications, omissions, additions, changes, payments, waivers, assignments, subcontracts and transfers, and hereby expressly stipulates and agrees that any and all things done and omitted to be done by and in relation to assignees, Subcontractors, and other transferees shall have the same effect as to said Surety (Sureties) as though done or omitted to be done or in relation to said Principal.

Payment Bond (Pages 100 to 103): Use for any contract for which a Payment Bond is required.

IN WITNESS WHEREOF, the Principal and the Surety (Sureties) have hereunto set their hands and seals, and such of them as are corporations have caused their corporate seals to be hereunto affixed and these presents to be signed by their proper officers, this _____ day of _____, _____.

(Seal) _____(L.S.)
Principal

By:_____

(Seal) _____
Surety

By:_____

(Seal) _____
Surety

By:_____

(Seal) _____
Surety

By:_____

(Seal) _____
Surety

By:_____

If the Contractor (Principal) is a partnership, the bond should be signed by each of the individuals who are partners.

If the Contractor (Principal) is a corporation, the bond should be signed in its correct corporate name by a duly authorized officer, agent, or attorney-in-fact.

There should be executed an appropriate number of counterparts of the bond corresponding to the number of counterparts of the Contract.

Payment Bond (Pages 100 to 103): Use for any contract for which a Payment Bond is required.

ACKNOWLEDGMENT OF PRINCIPAL, IF A CORPORATION

State of _____ County of _____ ss:

On this _____ day of _____, _____, before me personally came _____ to me known, who, being by me duly sworn did depose and say that he resides at _____ _____ that he is the _____ of the corporation described in and which executed the foregoing instrument; that he knows the seal of said corporation; that one of the seals affixed to said instrument is such seal; that it was so affixed by order of the directors of said corporation, and that he signed his name thereto by like order.

_____
Notary Public or Commissioner of Deeds

ACKNOWLEDGMENT OF PRINCIPAL, IF A PARTNERSHIP

State of _____ County of _____ ss:

On this _____ day of _____, _____, before me personally appeared _____ to me known, and known to me to be one of the members of the firm of _____ _____ described in and who executed the foregoing instrument; and he acknowledged to me that he executed the same as and for the act and deed of said firm.

_____
Notary Public or Commissioner of Deeds

ACKNOWLEDGMENT OF PRINCIPAL, IF AN INDIVIDUAL

State of _____ County of _____ ss:

On this _____ day of _____, _____, before me personally appeared _____ to me known, and known to me to be the person described in and who executed the foregoing instrument; and acknowledged that he executed the same.

_____
Notary Public or Commissioner of Deeds

Each executed bond should be accompanied by: (a) appropriate acknowledgments of the respective parties; (b) appropriate duly certified copy of Power of Attorney or other certificate of authority where bond is executed by agent, officer or other representative of Principal or Surety; (c) a duly certified extract from By-Laws or resolutions of Surety under which Power of Attorney or other certificate of authority of its agent, officer or representative was issued, and (d) certified copy of latest published financial statement of assets and liabilities of Surety.

* * * * * * * *

Affix Acknowledgments and Justification of Sureties.

(NO TEXT ON THIS PAGE)

SCHEDULE OF WORKMEN, MECHANICS AND LABORERS

The following is a list of classifications for workmen, mechanics and laborers which are anticipated to be employed in the performance of work under this contract, followed by a schedule of the prevailing wage rates and supplemental benefits for all classifications as established by the Comptroller of the City of New York.

Request for interpretation or correction under Subsection A of Section No. 3 in the Information for Bidders includes all requests for clarification of the classification of trades to be employed in the performance of the work under this contract.

In the event that a trade not listed in the classification of trades required to be used at the time of the award of the contract is in fact employed during the performance of this contract, the Contractor shall be required to obtain from the agency the prevailing wage rates and supplementary benefits for the trades used and to complete the performance of this contract at the price at which the contract was awarded.

CODE	CLASSIFICATION
15 42 001	Rigger
15 42 002	Sign Erector
16 11 001	Gardener
16 11 002	Tree Pruner
16 11 003	Tree Remover
16 11 011	Asphalt Raker (Highway & Paving)
16 11 012	Tamper (Highway & Paving)
16 11 013	Curbsetter (Highway & Paving)
16 11 014	Formsetter (Highway & Paving)
16 11 015	Rammerman (Highway & Paving)
16 11 016	Laborer (Highway & Paving)
16 11 017	ALL OTHER TITLES (Highway & Paving)
16 23 001	Laborer
16 23 002	Operating Engineer (Heavy Construction-Maintenance)
16 23 003	Junior Operating Engineer
16 23 004	Junior Operating Engineer
16 23 005	Junior Operating Engineer
16 23 006	Fireman (Heavy Construction)
16 23 007	Oiler (Heavy Construction)
16 23 051	Surveyor-Heavy Construction
16 23 052	Surveyor-Heavy Construction-Instrument Man
16 23 053	Surveyor-Heavy Construction-Rodman
16 23 057	Surveyor-Land Surveying-Party Chief
16 23 058	Surveyor-Land Surveying-Instrument Man
16 23 059	Surveyor-Land Surveying-Rodman

CODE	CLASSIFICATION
16 23 061	Operating Engineer-Road & Heavy Construction
16 23 062	Operating Engineer-Paving
16 23 063	Operating Engineer-Concrete
16 23 071	Teamster-Heavy Equipment Trailer Driver
16 23 072	Teamster-Dump Truck Driver
16 23 073	Teamster-Flat Bed Trailer Driver (3-Axle)
16 23 074	Teamster-Redi-Mix (Sand and Gravel)
16 29 011	Drill Runners
17 11 001	Plumbers
17 21 001	Painter (Brush & Roller)
17 31 001	Electrician
17 41 001	Bricklayer
17 41 002	Mason Tender
17 41 004	Cement Mason
17 42 002	Metallic Lather
17 51 001	Carpenter
17 51 002	Dock Builder
17 71 001	Cement & Concrete Worker
17 91 001	Structural Iron Worker
17 95 001	Barman
17 96 021	Derrickmen & Riggers
17 99 001	Ornamental Iron Worker
17 99 002	Sandblaster
17 99 005	Pointers (Waterproofer)
17 99 011	Welders

Each classification may include trainees depending upon project staffing schedules and as required by the terms of this contract.

LABOR LAW §220 PREVAILING WAGE SCHEDULE

Workers, Laborers and Mechanics employed on a public work project must receive not less than the prevailing rate of wage and benefits for the classification of work performed by each upon such public work. Pursuant to Labor Law §220 the Comptroller of the City of New York has promulgated this schedule solely for Workers, Laborers and Mechanics engaged by private contractors on New York City public work contracts.

This schedule is a compilation of separate determinations of the prevailing rate of wage and supplements made by the Comptroller for each trade classification listed herein pursuant to New York State Labor Law section 220 (5). The source of the wage and supplement rates, whether a collective bargaining agreement, survey data or other, is listed at the end of each classification.

Agency Chief Contracting Officers should contact the Bureau of Labor Law's Classification Unit with any questions concerning trade classifications, prevailing rates or prevailing practices with respect to procurement on New York City public works contracts. Contractors are advised to review the Comptroller's Prevailing Wage Schedule before bidding on public works contracts. Contractors with questions concerning trade classifications, prevailing rates or prevailing practices with respect to public works contracts in the procurement stage must contact the contracting agency responsible for the procurement.

Any error as to compensation under the prevailing wage law or other information as to trade classification, made by the contracting agency in the contract documents or in any other communication, will not preclude a finding against the contractor of prevailing wage violation.

Any questions concerning trade classifications, prevailing rates or prevailing practices on New York City public works contracts that have already been awarded may be directed to the Bureau of Labor Law's Classification Unit by calling (212) 669-7974. All callers must have the agency name and contract registration number available when calling with questions on public works contracts. Please direct all other compliance issues to: Bureau of Labor Law, Attn: Wasyl Kinach, P.E., Office of the Comptroller, 1 Centre Street, Room 1122, New York, N.Y. 10007; Fax (212) 669-4002.

The appropriate schedule of prevailing wages and benefits must be posted at all public work sites pursuant to Labor Law §220 (3-a) (a).

This schedule is applicable to work performed during the effective period, unless otherwise noted. Changes to this schedule are published on our web site www.comptroller.nyc.gov. Contractors must pay the wages and supplements in effect when the worker, laborer, mechanic performs the work. Preliminary schedules for future one-year periods appear in the City Record on or about June 1 each succeeding year. Final schedules appear on or about July 1 in the City Record and on our web site www.comptroller.nyc.gov.

The Comptroller's Office has attempted to include all overtime, shift and night differential, Holiday, Saturday, Sunday or other premium time work. However, this schedule does not set forth every prevailing practice with respect to such rates with which employers must comply. All such practices are nevertheless part of the employer's prevailing wage obligation and contained in the collective bargaining agreements of the prevailing wage unions. These collective bargaining agreements are available for inspection by appointment. Requests for appointments may be made by calling (212) 669-4443, Monday through Friday between the hours of 9 a.m. and 5 p.m.

Prevailing rates and ratios for apprentices are attached to this schedule in the Appendix. Pursuant to Labor Law §220 (3-e), only apprentices who are individually registered in a bona fide program to which the employer contractor is a participant, registered with the New York State Department of Labor, may be employed on a public work project. Workers who are not journey persons or not registered apprentices pursuant to Labor Law §220 (3-e) may not be substituted for apprentices and must be paid as journey persons.

Public Work construction, reconstruction, demolition, excavation, rehabilitation, repair, renovation, alteration, or improvement contracts awarded pursuant to a Project Labor Agreement ("PLA") in accordance with Labor Law section 222 may have different labor standards for shift, premium and overtime work. Please refer to the PLA's pre-negotiated labor agreements for wage and benefit rates applicable to work performed outside of the regular workday. More information is available at the Mayor's Office of Contract Services (MOCS) web page at http://www.nyc.gov/html/mocs/html/vendors/pla.shtml.

All the provisions of Labor Law section 220 remain applicable to PLA work including, but not limited to, the enforcement of prevailing wage requirements by the Comptroller; however, we will enforce shift, premium, overtime and other non-standard rates as they appear in a project's pre-negotiated labor agreement.

In order to meet their obligation to provide prevailing supplemental benefits to each covered employee, employers must either:

1) Provide bona-fide benefits which cost the employer no less than the prevailing supplemental benefits rate; or
2) Supplement the employee's hourly wage by an amount no less than the prevailing supplemental benefits rate; or
3) Provide a combination of bona-fide benefits and wage supplements which cost the employer no less than the prevailing supplemental benefits rate in total.

Particular attention should be given to the supplemental benefits requirement. Although in most instances the payment or provision for supplemental benefits is for each hour worked, some classifications require the payment or provision of supplemental benefits for each hour paid. Consequently, some prevailing practices require benefits to be purchased at the overtime, shift differential, Holiday, Saturday, Sunday or other premium time rate.

Benefits are paid for ***EACH HOUR WORKED*** unless otherwise noted.

Wasyl Kinach, P.E.
Director of Classifications
Bureau of Labor Law

TABLE OF CONTENTS

CLASSIFICATION	PAGE
ASBESTOS HANDLER	5
BLASTER	5
BOILERMAKER	7
BRICKLAYER	8
CARPENTER - BUILDING COMMERCIAL	9
CARPENTER - HEAVY CONSTRUCTION WORK	10
CARPENTER - SIDEWALK SHED, SCAFFOLD AND HOIST	11
CEMENT & CONCRETE WORKER	12
CEMENT MASON	13
CORE DRILLER	14
DERRICKPERSON AND RIGGER	15
DIVER	16
DOCKBUILDER - PILE DRIVER	17
DRIVER: TRUCK (TEAMSTER)	17
ELECTRICIAN	20
ELECTRICIAN - ALARM TECHNICIAN	23
ELECTRICIAN-STREET LIGHTING WORKER	24
ELEVATOR CONSTRUCTOR	26
ELEVATOR REPAIR & MAINTENANCE	27
ENGINEER	28
ENGINEER - CITY SURVEYOR AND CONSULTANT	32
ENGINEER - FIELD (BUILDING CONSTRUCTION)	33
ENGINEER - FIELD (HEAVY CONSTRUCTION)	34
ENGINEER - FIELD (STEEL ERECTION)	35
ENGINEER - OPERATING	36
FLOOR COVERER	44
GLAZIER	45
GLAZIER - REPAIR & MAINTENANCE	46
HEAT AND FROST INSULATOR	47
HOUSE WRECKER	48
IRON WORKER - ORNAMENTAL	49
IRON WORKER - STRUCTURAL	50
LABORER	50

LANDSCAPING 51
MARBLE MECHANIC 53
MASON TENDER 54
MASON TENDER (INTERIOR DEMOLITION WORKER) 55
METALLIC LATHER 56
MILLWRIGHT 57
MOSAIC MECHANIC 58
PAINTER 59
PAINTER - METAL POLISHER 60
PAINTER - STRIPER 61
PAINTER - STRUCTURAL STEEL 62
PAPERHANGER 63
PAVER AND ROADBUILDER 64
PLASTERER 65
PLASTERER - TENDER 66
PLUMBER 67
PLUMBER (MECHNICAL EQUIPMENT AND SERVICE) 68
PLUMBER (RESIDENTIAL RATES FOR 1, 2 AND 3 FAMILY HOME CONSTRUCTION) 69
PLUMBER: PUMP & TANK 70
POINTER, WATERPROOFER, CAULKER, SANDBLASTER, STEAMBLASTER 70
ROOFER 71
SHEET METAL WORKER 72
SHEET METAL WORKER - SPECIALTY 73
SHIPYARD WORKER 74
SIGN ERECTOR 75
STEAMFITTER 76
STEAMFITTER - REFRIGERATION AND AIR CONDITIONER 78
STONE MASON - SETTER 80
TAPER 81
TELECOMMUNICATION WORKER 81
TILE FINISHER 83
TILE LAYER - SETTER 83
TIMBERPERSON 84
TUNNEL WORKER 85
WELDER 87

ASBESTOS HANDLER

(Hazardous Material; Disturbs, removes, encapsulates, repairs, or encloses friable asbestos material)

Asbestos Handler

Effective Period: 7/1/2016 - 6/30/2017
Wage Rate per Hour: $36.00
Supplemental Benefit Rate per Hour: $16.45

Overtime
Time and one half the regular rate after an 8 hour day.
Time and one half the regular rate for Sunday.
Time and one half the regular hourly rate after 40 hours in any work week.

Overtime Holidays
Time and one half the regular rate for work on the following holiday(s).
New Year's Day
Good Friday
Memorial Day
Independence Day
Labor Day
Thanksgiving Day
Christmas Day
Easter

Paid Holidays
None

(Local #78 and Local #12A)

BLASTER

Blaster

Effective Period: 7/1/2016 - 6/30/2017
Wage Rate per Hour: $44.93
Supplemental Benefit Rate per Hour: $46.24

Blaster (Hydraulic)

Effective Period: 7/1/2016 - 6/30/2017

Wage Rate per Hour: $45.78
Supplemental Benefit Rate per Hour: $46.24

Blaster - Trac Drill Hydraulic

Effective Period: 7/1/2016 - 6/30/2017
Wage Rate per Hour: $40.12
Supplemental Benefit Rate per Hour: $46.24

Blaster - Wagon: Air Trac: Quarry Bar: Drillrunners

Effective Period: 7/1/2016 - 6/30/2017
Wage Rate per Hour: $39.31
Supplemental Benefit Rate per Hour: $46.24

Blaster - Operators of Jack Hammers

Chippers: Spaders: Concrete Breakers: and all other pneumatic tools of like usage: Walk Behind Self Propelled Hydraulic Asphalt and Concrete Breakers: Hydro (Water) Demolition

Effective Period: 7/1/2016 - 6/30/2017
Wage Rate per Hour: $38.23
Supplemental Benefit Rate per Hour: $46.24

Blaster - Powder Carriers

Effective Period: 7/1/2016 - 6/30/2017
Wage Rate per Hour: $34.20
Supplemental Benefit Rate per Hour: $46.24

Blaster - Hydraulic Trac Drill Chuck Tender

Effective Period: 7/1/2016 - 6/30/2017
Wage Rate per Hour: $32.88
Supplemental Benefit Rate per Hour: $46.24

Blaster - Chuck Tender & Nipper

Effective Period: 7/1/2016 - 6/30/2017
Wage Rate per Hour: $32.10
Supplemental Benefit Rate per Hour: $46.24

Blaster - Magazine Keepers: (Watch Person)

Effective Period: 7/1/2016 - 6/30/2017
Wage Rate per Hour: $17.80
Supplemental Benefit Rate per Hour: $46.24

Overtime Description

Magazine Keepers:
Time and one half for work performed in excess of forty (40) hours per week and for work performed on Saturdays, Sundays and Holidays.

All Other Employees:
Time and one-half for the first two hours of overtime Monday through Friday, the first ten hours, the first ten hours of work on Saturday and for Make-up Time. Double time for all hours over ten Monday through Saturday (except make-up hours) and for all hours worked on Sunday and Holidays.

Overtime Holidays

Double time the regular rate for work on the following holiday(s).
New Year's Day
Memorial Day
Independence Day
Labor Day
Columbus Day
Presidential Election Day
Thanksgiving Day
Christmas Day

Paid Holidays

None

Shift Rates

A single shift shall be 8 hours plus an unpaid lunch, starting at 8:00 A.M (or between 6:00 A.M. and 10:00 A.M. on weekdays). When two (2) shifts are employed, each shift shall be 8 hours plus ½ hour unpaid lunch. When three (3) shifts are employed, each shift will work seven and one-half (7 ½) hours, but will be paid for eight (8) hours, since only one-half (½) hour is allowed for mealtime. When two (2) or more shifts are employed, single time will be paid for each shift. The first 8 hours of any and all work performed Monday through Friday inclusive of any off-shift shall be at the single time rate.

(Local #29)

BOILERMAKER

Boilermaker

Effective Period: 7/1/2016 - 12/31/2016
Wage Rate per Hour: $53.36
Supplemental Benefit Rate per Hour: $42.33
Supplemental Note: For time and one half overtime - $62.88 For double overtime - $83.42

Effective Period: 1/1/2017 - 6/30/2017
Wage Rate per Hour: $55.23
Supplemental Benefit Rate per Hour: $42.96
Supplemental Note: For time and one half overtime - $63.82 For double overtime - $84.68

Overtime Description

For Repair and Maintenance work:
Time and one half the regular rate after an 8 hour day.
Time and one half the regular rate for Saturday.
Double time the regular rate for Sunday.
For New Construction work:
Double time the regular rate after an 8 hour day.
Double time the regular time rate for Saturday.
Double time the regular rate for Sunday.

Overtime Holidays

Double time the regular rate for work on the following holiday(s).
New Year's Day
President's Day
Memorial Day
Independence Day
Columbus Day
Election Day
Veteran's Day
Thanksgiving Day
Christmas Day

Quadruple time the regular rate for work on the following holiday(s).
Labor Day

Paid Holidays

Good Friday
Day after Thanksgiving
Day before Christmas
Day before New Year's Day

Shift Rates

When shifts are required, the first shift shall work eight (8) hours at the regular straight-time hourly rate. The second shift shall work seven and one-half (7 ½) hours and receive eight hours at the regular straight time hourly rate plus twenty-five cents ($0.25) per hour. The third shift shall work seven (7) hours and receive eight hours at the regular straight time hourly rate plus fifty cents ($0.50) per hour. A thirty (30) minute lunch period shall not be considered as time worked. Work in excess of the above shall be paid overtime at the appropriate new construction work or repair work overtime wage and supplemental benefit hourly rate.

(Local #5)

BRICKLAYER

Bricklayer

Effective Period: 7/1/2016 - 6/30/2017
Wage Rate per Hour: $52.59

Supplemental Benefit Rate per Hour: **$30.00**

Overtime
Time and one half the regular rate after a 7 hour day.
Time and one half the regular rate for Saturday.
Double time the regular rate for Sunday.
Saturday may be used as a make-up day at straight time when a day is lost during that week to inclement weather.

Overtime Holidays
Double time the regular rate for work on the following holiday(s).
New Year's Day
President's Day
Memorial Day
Independence Day
Labor Day
Thanksgiving Day
Christmas Day

Paid Holidays
None

Shift Rates
Overtime rates to be paid outside the regular scheduled work day.

(Bricklayer District Council)

CARPENTER - BUILDING COMMERCIAL

Building Commercial

Effective Period: 7/1/2016 - 6/30/2017
Wage Rate per Hour: **$52.50**
Supplemental Benefit Rate per Hour: **$46.28**

Overtime
Time and one half the regular rate after an 8 hour day.
Time and one half the regular rate for Saturday.
Double time the regular rate for Sunday.
Saturday may be used as a make-up day at straight time when a day is lost during that week to inclement weather.

Overtime Holidays
Double time the regular rate for work on the following holiday(s).
New Year's Day
Washington's Birthday

Memorial Day
Independence Day
Labor Day
Columbus Day
Presidential Election Day
Thanksgiving Day
Day after Thanksgiving
Christmas Day

Paid Holidays
None

Shift Rates
The second shift will receive one hour at the double time rate of pay for the last hour of the shift; eight hours pay for seven hours of work, nine hours pay for eight hours of work. There must be a first shift in order to work a second shift.

(Carpenters District Council)

CARPENTER - HEAVY CONSTRUCTION WORK
(Construction of Engineering Structures and Building Foundations)

Heavy Construction Work

Effective Period: 7/1/2016 - 6/30/2017
Wage Rate per Hour: $51.63
Supplemental Benefit Rate per Hour: $48.65

Overtime
Time and one half the regular rate after an 8 hour day.
Time and one half the regular rate for Saturday.
Double time the regular rate for Sunday.
Saturday may be used as a make-up day at straight time when a day is lost during that week to inclement weather.

Overtime Holidays
Double time the regular rate for work on the following holiday(s).
New Year's Day
President's Day
Memorial Day
Independence Day
Labor Day
Columbus Day
Presidential Election Day
Thanksgiving Day
Christmas Day

Paid Holidays
None

Shift Rates
Off shift work commencing between 5:00 P.M. and 11:00 P.M. shall work eight and one half hours allowing for one half hour for lunch. The wage rate shall be 113% of the straight time hourly wage rate.

(Carpenters District Council)

CARPENTER - SIDEWALK SHED, SCAFFOLD AND HOIST

Carpenter - Hod Hoist

(Assisted by Mason Tender)

Effective Period: 7/1/2016 - 6/30/2017
Wage Rate per Hour: $50.50
Supplemental Benefit Rate per Hour: $44.80

Overtime
Time and one half the regular rate after an 8 hour day.
Time and one half the regular rate for Saturday.
Double time the regular rate for Sunday.
Saturday may be used as a make-up day at straight time when a day is lost during that week to inclement weather.

Overtime Holidays
Double time the regular rate for work on the following holiday(s).
New Year's Day
President's Day
Memorial Day
Independence Day
Labor Day
Columbus Day
Presidential Election Day
Thanksgiving Day
Day after Thanksgiving
Christmas Day

Paid Holidays
None

Shift Rates

The second shift will receive one hour at the double time rate of pay for the last hour of the shift; eight hours pay for seven hours of work, nine hours pay for eight hours of work. There must be a first shift in order to work a second shift.

(Carpenters District Council)

CEMENT & CONCRETE WORKER

Cement & Concrete Worker

Effective Period: 7/1/2016 - 6/30/2017
Wage Rate per Hour: $42.48
Supplemental Benefit Rate per Hour: $23.00
Supplemental Note: $25.75 on Saturdays; $28.50 on Sundays & Holidays

Cement & Concrete Worker - (Hired after 2/6/2016)

Effective Period: 7/1/2016 - 6/30/2017
Wage Rate per Hour: $32.00
Supplemental Benefit Rate per Hour: $16.00
Supplemental Note: $17.25 on Saturdays; $18.50 on Sundays & Holidays

Overtime Description
Time and one half the regular rate after 7 hour day (time and one half the regular rate after an 8 hour day when working with Dockbuilders on pile cap forms and for work below street level to the top of the foundation wall, not to exceed 2 feet or 3 feet above the sidewalk-brick shelf, when working on the foundation and structure.)

Overtime
Time and one half the regular rate for Saturday.
Double time the regular rate for Sunday.

Overtime Holidays
Double time the regular rate for work on the following holiday(s).
New Year's Day
President's Day
Good Friday
Memorial Day
Independence Day
Labor Day
Columbus Day
Presidential Election Day
Thanksgiving Day
Christmas Day

Paid Holidays
1/2 day before Christmas Day

1/2 day before New Year's Day

Shift Rates
On shift work extending over a twenty-four hour period, all shifts are paid at straight time.

(Cement Concrete Workers District Council)

CEMENT MASON

Cement Mason

Effective Period: 7/1/2016 - 6/30/2017
Wage Rate per Hour: $40.72
Supplemental Benefit Rate per Hour: $38.96
Supplemental Note: For time and one half overtime - $48.21; For double overtime - $57.46

Overtime Description
Time and one-half the regular rate after an 8 hour day, double time the regular rate after 10 hours. Time and one-half the regular rate on Saturday, double time the regular rate after 10 hours. Double time the regular rate on Sunday.

Overtime Holidays
Double time the regular rate for work on the following holiday(s).
New Year's Day
President's Day
Good Friday
Memorial Day
Independence Day
Labor Day
Columbus Day
Presidential Election Day
Thanksgiving Day
Christmas Day

Paid Holidays
Any worker who reports to work on Christmas Eve or New Year's Eve pursuant to his employer's instruction shall be entitled to three (3) hours afternoon pay without working.

Shift Rates
For an off shift day, (work at times other than the regular 7:00 A.M. to 3:30 P.M. work day) a cement mason shall be paid at the regular hourly rate plus a 25% per hour differential. Four Days a week at Ten (10)hour day.

(Local #780) (BCA)

CORE DRILLER

Core Driller

Effective Period: 7/1/2016 - 6/30/2017
Wage Rate per Hour: $37.82
Supplemental Benefit Rate per Hour: $24.00

Core Driller Helper

Effective Period: 7/1/2016 - 6/30/2017
Wage Rate per Hour: $30.17
Supplemental Benefit Rate per Hour: $24.00

Core Driller Helper(Third year in the industry)

Effective Period: 7/1/2016 - 6/30/2017
Wage Rate per Hour: $27.15
Supplemental Benefit Rate per Hour: $24.00

Core Driller Helper (Second year in the industry)

Effective Period: 7/1/2016 - 6/30/2017
Wage Rate per Hour: $24.14
Supplemental Benefit Rate per Hour: $24.00

Core Driller Helper (First year in the industry)

Effective Period: 7/1/2016 - 6/30/2017
Wage Rate per Hour: $21.12
Supplemental Benefit Rate per Hour: $24.00

Overtime Description
Time and one half the regular rate for work on a holiday plus Holiday pay when worked.

Overtime
Time and one half the regular rate after an 8 hour day.
Time and one half the regular rate for Saturday.
Double time the regular rate for Sunday.
Time and one half the regular rate for work on the following holiday(s).

Paid Holidays
New Year's Day
Memorial Day
Independence Day
Labor Day

Thanksgiving Day
Christmas Day

Shift Rates

The shift day shall be the continuous eight and one-half (8½) hours from 6:00 A.M. to 2:30 P.M. and from 2:30 P.M. to 11:00 P.M., including one-half (½) hour of employees regular rate of pay for lunch. When two (2) or more shifts are employed, single time shall be paid for each shift, but those employees employed on a shift other than from 8:00 A.M. to 5:00 P.M. shall, in addition, receive seventy-five cents ($0.75) per hour differential for each hour worked. When three (3) shifts are needed, each shift shall work seven and one-half (7 ½) hours paid for eight (8) hours of labor and be permitted one-half (½) hour for mealtime.

(Carpenters District Council)

DERRICKPERSON AND RIGGER

Derrick Person & Rigger

Effective Period: 7/1/2016 - 6/30/2017
Wage Rate per Hour: $45.48
Supplemental Benefit Rate per Hour: $50.00
Supplemental Note: The above supplemental rate applies for work performed in Manhattan, Bronx, Brooklyn and Queens. $51.42 - For work performed in Staten Island.

Overtime Description

The first two hours of overtime on weekdays and the first seven hours of work on Saturdays are paid at time and one half for wages and supplemental benefits. All additional overtimes is paid at double time for wages and supplemental benefits. Deduct $1.42 from the Staten Island hourly benefits rate before computing overtime.

Overtime

Double time the regular rate for Sunday.

Overtime Holidays

Double time the regular rate for work on the following holiday(s).
New Year's Day
Washington's Birthday
Good Friday
Memorial Day
Independence Day
Labor Day
Thanksgiving Day
Christmas Day

Paid Holidays

1/2 day on Christmas Eve if work is performed in the A.M.

(Local #197)

DIVER

Diver (Marine)

Effective Period: 7/1/2016 - 6/30/2017
Wage Rate per Hour: $65.38
Supplemental Benefit Rate per Hour: $48.65

Diver Tender (Marine)

Effective Period: 7/1/2016 - 6/30/2017
Wage Rate per Hour: $46.44
Supplemental Benefit Rate per Hour: $48.65

Overtime
Time and one half the regular rate after an 8 hour day.
Time and one half the regular rate for Saturday.
Double time the regular rate for Sunday.
Saturday may be used as a make-up day at straight time when a day is lost during that week to inclement weather.

Overtime Holidays
Double time the regular rate for work on the following holiday(s).
New Year's Day
President's Day
Memorial Day
Independence Day
Labor Day
Columbus Day
Presidential Election Day
Thanksgiving Day
Christmas Day

Paid Holidays
None

Shift Rates
When three shifts are utilized each shift shall work seven and one half-hours (7 1/2 hours) and paid for 8 hours, allowing for one half hour for lunch.

(Carpenters District Council)

DOCKBUILDER - PILE DRIVER

Dockbuilder - Pile Driver

Effective Period: 7/1/2016 - 6/30/2017
Wage Rate per Hour: $51.63
Supplemental Benefit Rate per Hour: $48.65

Overtime
Time and one half the regular rate after an 8 hour day.
Time and one half the regular rate for Saturday.
Double time the regular rate for Sunday.
Saturday may be used as a make-up day at straight time when a day is lost during that week to inclement weather.

Overtime Holidays
Double time the regular rate for work on the following holiday(s).
New Year's Day
President's Day
Memorial Day
Independence Day
Labor Day
Columbus Day
Presidential Election Day
Thanksgiving Day
Christmas Day

Paid Holidays
None

Shift Rates
Off shift work commencing between 5:00 P.M. and 11:00 P.M. shall work eight and one half hours allowing for one half hour for lunch. The wage rate shall be 113% of the straight time hourly wage rate.

(Carpenters District Council)

DRIVER: TRUCK (TEAMSTER)

Driver - Dump Truck

Effective Period: 7/1/2016 - 6/30/2017
Wage Rate per Hour: $40.15
Supplemental Benefit Rate per Hour: $43.39
Supplemental Note: Over 40 hours worked: at time and one half rate - $18.44; at double time rate - $24.58

Driver - Tractor Trailer

Effective Period: 7/1/2016 - 6/30/2017
Wage Rate per Hour: $41.46
Supplemental Benefit Rate per Hour: $43.65
Supplemental Note: Over 40 hours worked: at time and one half rate - $16.65; at double time rate - $22.20

Driver - Euclid & Turnapull Operator

Effective Period: 7/1/2016 - 6/30/2017
Wage Rate per Hour: $42.03
Supplemental Benefit Rate per Hour: $43.65
Supplemental Note: Over 40 hours worked: at time and one half rate - $16.65; at double time rate - $22.20

Overtime Description
For Paid Holidays: Holiday pay for all holidays shall be prorated based two hours per day for each day worked in the holiday week, not to exceed 8 hours of holiday pay. For Thanksgiving week, the prorated share shall be 5 1/3 hours of holiday pay for each day worked in Thanksgiving week.

Overtime
Time and one half the regular rate after an 8 hour day.
Time and one half the regular rate for Saturday.
Double time the regular rate for Sunday.

Overtime Holidays
Double time the regular rate for work on the following holiday(s).
New Year's Day
President's Day
Memorial Day
Independence Day
Labor Day
Columbus Day
Veteran's Day
Thanksgiving Day
Day after Thanksgiving
Christmas Day

Paid Holidays
New Year's Day
President's Day
Memorial Day
Independence Day
Labor Day
Columbus Day
Veteran's Day
Thanksgiving Day
Day after Thanksgiving
Christmas Day

Shift Rates
Off single shift work commencing between 6:00 P.M. and 5:00 A.M. shall work eight and one half hours allowing for one half hour for lunch and receive 9 hours pay for 8 hours of work.

Driver Redi-Mix (Sand & Gravel)

Effective Period: 7/1/2016 - 6/30/2017
Wage Rate per Hour: $36.30
Supplemental Benefit Rate per Hour: $40.02
Supplemental Note: Over 40 hours worked: time and one half rate $13.90, double time rate $18.53

Overtime Description
For Paid Holidays: Employees working two (2) days in the calendar week in which the holiday falls are to paid for these holidays, provided they shape each remaining workday during that calendar week.

Overtime
Time and one half the regular rate after an 8 hour day.
Time and one half the regular rate for Saturday.
Double time the regular rate for Sunday.

Overtime Holidays
Double time the regular rate for work on the following holiday(s).
President's Day
Columbus Day
Veteran's Day

Triple time the regular rate for work on the following holiday(s).
New Year's Day
Memorial Day
Independence Day
Labor Day
Thanksgiving Day
Christmas Day

Paid Holidays
New Year's Day
President's Day
Memorial Day
Independence Day
Labor Day
Columbus Day
Election Day
Thanksgiving Day
Christmas Day

(Local #282)

ELECTRICIAN

(Including all low voltage cabling carrying data; video; and voice in combination with data and or video.)

Electrician "A" (Regular Day)

Effective Period: 7/1/2016 - 5/10/2017
Wage Rate per Hour: $54.00
Supplemental Benefit Rate per Hour: $51.86

Effective Period: 5/11/2017 - 6/30/2017
Wage Rate per Hour: $56.00
Supplemental Benefit Rate per Hour: $54.35

Electrician "A" (Regular Day Overtime)

Effective Period: 7/1/2016 - 5/10/2017
Wage Rate per Hour: $81.00
Supplemental Benefit Rate per Hour: $55.24

Effective Period: 5/11/2017 - 6/30/2017
Wage Rate per Hour: $84.00
Supplemental Benefit Rate per Hour: $57.86

Electrician "A" (Day Shift)

Effective Period: 7/1/2016 - 5/10/2017
Wage Rate per Hour: $54.00
Supplemental Benefit Rate per Hour: $51.86

Effective Period: 5/11/2017 - 6/30/2017
Wage Rate per Hour: $56.00
Supplemental Benefit Rate per Hour: $54.35

Electrician "A" (Day Shift Overtime After 8 hours)

Effective Period: 7/1/2016 - 5/10/2017
Wage Rate per Hour: $81.00
Supplemental Benefit Rate per Hour: $55.24

Effective Period: 5/11/2017 - 6/30/2017
Wage Rate per Hour: $84.00
Supplemental Benefit Rate per Hour: $57.86

Electrician "A" (Swing Shift)

Effective Period: 7/1/2016 - 5/10/2017

Wage Rate per Hour: $63.36
Supplemental Benefit Rate per Hour: $59.01

Effective Period: 5/11/2017 - 6/30/2017
Wage Rate per Hour: $65.71
Supplemental Benefit Rate per Hour: $61.94

Electrician "A" (Swing Shift Overtime After 7.5 hours)

Effective Period: 7/1/2016 - 5/10/2017
Wage Rate per Hour: $95.04
Supplemental Benefit Rate per Hour: $62.98

Effective Period: 5/11/2017 - 6/30/2017
Wage Rate per Hour: $98.57
Supplemental Benefit Rate per Hour: $66.05

Electrician "A" (Graveyard Shift)

Effective Period: 7/1/2016 - 5/10/2017
Wage Rate per Hour: $70.97
Supplemental Benefit Rate per Hour: $65.05

Effective Period: 5/11/2017 - 6/30/2017
Wage Rate per Hour: $73.60
Supplemental Benefit Rate per Hour: $68.33

Electrician "A" (Graveyard Shift Overtime After 7 hours)

Effective Period: 7/1/2016 - 5/10/2017
Wage Rate per Hour: $106.46
Supplemental Benefit Rate per Hour: $69.50

Effective Period: 5/11/2017 - 6/30/2017
Wage Rate per Hour: $110.40
Supplemental Benefit Rate per Hour: $72.95

Overtime
Time and one half the regular rate after a 7 hour day.
Time and one half the regular rate for Saturday.
Time and one half the regular rate for Sunday.

Overtime Holidays
Time and one half the regular rate for work on a holiday.
New Year's Day
Martin Luther King Jr. Day
President's Day
Memorial Day
Independence Day
Labor Day

Columbus Day
Veteran's Day
Thanksgiving Day
Day after Thanksgiving
Christmas Day

Paid Holidays

None

Shift Rates

When so elected by the Employer, one or more shifts of at least five days duration may be scheduled as follows: Day Shift: 8:00 am to 4:30 pm, Swing Shift 4:30 pm to 12:30 am, Graveyard Shift: 12:30 am to 8:00 am.

For multiple shifts of temporary light and/or power, the temporary light and/or power employee shall be paid for 8 hours at the straight time rate. For three or less workers performing 8 hours temporary light and/or power the supplemental benefit rate is $25.14 and effective 5/11/17 $25.67.

Electrician "M" (First 8 hours)

"M" rated work shall be defined as jobbing: electrical work of limited duration and scope, also consisting of repairs and/or replacement of electrical and tele-data equipment. Includes all work necessary to retrofit, service, maintain and repair all kinds of lighting fixtures and local lighting controls and washing and cleaning of foregoing fixtures.

Effective Period: 7/1/2016 - 5/10/2017
Wage Rate per Hour: $28.00
Supplemental Benefit Rate per Hour: $21.85
First and Second Year "M" Wage Rate Per Hour: $23.50
First and Second Year "M" Supplemental Rate: $19.54

Effective Period: 5/11/2017 - 6/30/2017
Wage Rate per Hour: $28.50
Supplemental Benefit Rate per Hour: $22.10
First and Second Year "M" Wage Rate Per Hour: $24.00
First and Second Year "M" Supplemental Rate: $19.80

Electrician "M" (Overtime After First 8 hours)

"M" rated work shall be defined as jobbing: electrical work of limited duration and scope, also consisting of repairs and/or replacement of electrical and tele-data equipment. Includes all work necessary to retrofit, service, maintain and repair all kinds of lighting fixtures and local lighting controls and washing and cleaning of foregoing fixtures.

Effective Period: 7/1/2016 - 5/10/2017
Wage Rate per Hour: $42.00
Supplemental Benefit Rate per Hour: $23.60
First and Second Year "M" Wage Rate Per Hour: $35.25
First and Second Year "M" Supplemental Rate: $21.01

Effective Period: 5/11/2017 - 6/30/2017
Wage Rate per Hour: $42.75
Supplemental Benefit Rate per Hour: $23.89
First and Second Year "M" Wage Rate Per Hour: $36.00
First and Second Year "M" Supplemental Rate: $21.30

Overtime
Time and one half the regular rate after an 8 hour day.
Time and one half the regular rate for Saturday.
Time and one half the regular rate for Sunday.

Overtime Holidays
Time and one half the regular rate for work on the following holiday(s).
New Year's Day
Martin Luther King Jr. Day
President's Day
Memorial Day
Independence Day
Labor Day
Columbus Day
Veteran's Day
Thanksgiving Day
Day after Thanksgiving
Christmas Day

Paid Holidays
None

(Local #3)

ELECTRICIAN - ALARM TECHNICIAN
(Scope of Work - Inspect, test, repair, and replace defective, malfunctioning, or broken devices, components and controls of Fire, Burglar and Security Systems)

Alarm Technician

Effective Period: 7/1/2016 - 3/9/2017
Wage Rate per Hour: $32.00
Supplemental Benefit Rate per Hour: $15.47
Supplemental Note: $13.97 only after 8 hours worked in a day

Effective Period: 3/10/2017 - 6/30/2017
Wage Rate per Hour: $32.40
Supplemental Benefit Rate per Hour: $16.10

Supplemental Note: $14.60 only after 8 hours worked in a day

Overtime Description

Time and one half the regular rate for work on the following holidays: Columbus Day, Veterans Day, Day after Thanksgiving.
Double time the regular rate for work on the following holidays: New Year's day, Martin Luther King Jr. Day, President's Day, Memorial Day, Independence Day, Labor Day, Thanksgiving Day, Christmas Day.

Overtime

Time and one half the regular rate after an 8 hour day.
Time and one half the regular rate for Saturday.
Double time the regular rate for Sunday.

Paid Holidays

New Year's Day
Martin Luther King Jr. Day
President's Day
Memorial Day
Independence Day
Labor Day
Columbus Day
Veteran's Day
Thanksgiving Day
Day after Thanksgiving
Christmas Day

Shift Rates

Night Differential is based upon a ten percent (10%) differential between the hours of 4:00 P.M. and 12:30 A.M. and a fifteen percent (15%) differential for the hours 12:00 A.M. to 8:00 A.M.

Vacation

At least 1 year of employment.....ten (10) days
5 years or more of employment.....fifteen (15) days
10 years of employment.....twenty (20) days
Plus one Personal Day per year

Sick Days:
One day per Year. Up to 4 vacation days may be used as sick days.

(Local #3)

ELECTRICIAN-STREET LIGHTING WORKER

Electrician - Electro Pole Electrician

Effective Period: 7/1/2016 - 5/17/2017
Wage Rate per Hour: $54.00
Supplemental Benefit Rate per Hour: $53.69

Effective Period: 5/18/2017 - 6/30/2017
Wage Rate per Hour: $56.00
Supplemental Benefit Rate per Hour: $56.26

Electrician - Electro Pole Foundation Installer

Effective Period: 7/1/2016 - 5/17/2017
Wage Rate per Hour: $40.93
Supplemental Benefit Rate per Hour: $40.12

Effective Period: 5/18/2017 - 6/30/2017
Wage Rate per Hour: $41.54
Supplemental Benefit Rate per Hour: $41.02

Electrician - Electro Pole Maintainer

Effective Period: 7/1/2016 - 5/17/2017
Wage Rate per Hour: $35.05
Supplemental Benefit Rate per Hour: $36.11

Effective Period: 5/18/2017 - 6/30/2017
Wage Rate per Hour: $35.58
Supplemental Benefit Rate per Hour: $36.89

Overtime Description

Electrician - Electro Pole Electrician: Time and one half the regular rate after a 7 hour day and after 5 consecutive days worked per week.
Electrician - Electro Pole Foundation Installer: Time and one half the regular rate after 8 hours within a 24 hour period and Saturday and Sunday.
Electrician - Electro Pole Maintainer: Time and one half the regular rate after a 7 hour day and after 5 consecutive days worked per week. Saturdays and Sundays may be used as a make-up day at straight time when a day is lost during the week to inclement weather.

Overtime Holidays

Time and one half the regular rate for work on the following holiday(s).
New Year's Day
Martin Luther King Jr. Day
President's Day
Memorial Day
Independence Day
Labor Day
Columbus Day
Veteran's Day
Thanksgiving Day
Day after Thanksgiving
Christmas Day

Paid Holidays

None

(Local #3)

ELEVATOR CONSTRUCTOR

Elevator Constructor

Effective Period: 7/1/2016 - 3/16/2017
Wage Rate per Hour: $60.96
Supplemental Benefit Rate per Hour: $32.65

Effective Period: 3/17/2017 - 6/30/2017
Wage Rate per Hour: $62.64
Supplemental Benefit Rate per Hour: $34.25

Overtime Description

For New Construction: work performed after 7 or 8 hour day, Saturday, Sunday or between 4:30pm and 7:00am shall be paid at double time rate.

Existing buildings: work performed after an 8 hour day, Saturday, Sunday or between 5:30pm and 7:00 am shall be paid time and one half.

Overtime

Double time the regular rate for work on the following holiday(s).

Paid Holidays

New Year's Day
President's Day
Good Friday
Memorial Day
Independence Day
Labor Day
Columbus Day
Veteran's Day
Thanksgiving Day
Day after Thanksgiving
Christmas Day

Vacation

Employer contributes 8% of regular basic hourly rate as vacation pay for employees with more than 15 years of service, and 6% for employees with 5 to 15 years of service, and 4% for employees with less than 5 years of service.

(Local #1)

ELEVATOR REPAIR & MAINTENANCE

Elevator Service/Modernization Mechanic

Effective Period: 7/1/2016 - 3/16/2017
Wage Rate per Hour: $47.91
Supplemental Benefit Rate per Hour: $32.51

Effective Period: 3/17/2017 - 6/30/2017
Wage Rate per Hour: $49.14
Supplemental Benefit Rate per Hour: $34.11

Overtime Description
For Scheduled Service Work: Double time - work scheduled in advance by two or more workers performed on Sundays, Holidays, and between midnight and 7:00am.

Overtime
Time and one half the regular rate after an 8 hour day.
Time and one half the regular rate for Saturday.
Time and one half the regular rate for Sunday.
Time and one half the regular rate for work on a holiday plus the day's pay.

Paid Holidays
New Year's Day
President's Day
Good Friday
Memorial Day
Independence Day
Labor Day
Columbus Day
Veteran's Day
Thanksgiving Day
Day after Thanksgiving
Christmas Day

Shift Rates
Afternoon shift - regularly hourly rate plus a (15%) fifteen percent differential. Graveyard shift - time and one half the regular rate.

Vacation
Employer contributes 8% of regular basic hourly rate as vacation pay for employees with more than 15 years of service, and 6% for employees with 5 to 15 years of service, and 4% for employees with less than 5 years of service.

(Local #1)

ENGINEER

Engineer - Heavy Construction Operating Engineer I

Cherrypickers 20 tons and over and Loaders (rubber tired and/or tractor type with a manufacturer's minimum rated capacity of six cubic yards and over).

Effective Period: 7/1/2016 - 6/30/2017
Wage Rate per Hour: $65.94
Supplemental Benefit Rate per Hour: $35.41
Supplemental Note: $63.67 on overtime
Shift Wage Rate: $105.50

Engineer - Heavy Construction Operating Engineer II

Backhoes, Basin Machines, Groover, Mechanical Sweepers, Bobcat, Boom Truck, Barrier Transport (Barrier Mover) & machines of similar nature. Operation of Churn Drills and machines of a similar nature, Stetco Silent Hoist and machines of similar nature, Vac-Alls, Meyers Machines, John Beam and machines of a similar nature, Ross Carriers and Travel Lifts and machines of a similar nature, Bulldozers, Scrapers and Turn-a-Pulls: Tugger Hoists (Used exclusively for handling excavated material); Tractors with attachments, Hyster and Roustabout Cranes, Cherrypickers. Austin Western, Grove and machines of a similar nature, Scoopmobiles, Monorails, Conveyors, Trenchers: Loaders-Rubber Tired and Tractor: Barber Greene and Eimco Loaders and Eimco Backhoes; Mighty Midget and similar breakers and Tampers, Curb and Gutter Pavers and Motor Patrol, Motor Graders and all machines of a similar nature. Locomotives 10 Tons or under. Mini-Max, Break-Tech and machines of a similar nature; Milling machines, robotic and demolition machines and machines of a similar nature, shot blaster, skid steer machines and machines of a similar nature including bobcat, pile rig rubber-tired excavator (37,000 lbs. and under), 2 man auger.

Effective Period: 7/1/2016 - 6/30/2017
Wage Rate per Hour: $63.98
Supplemental Benefit Rate per Hour: $35.41
Supplemental Note: $63.67 on overtime
Shift Wage Rate: $102.37

Engineer - Heavy Construction Operating Engineer III

Minor Equipment such as Tractors, Post Hole Diggers, Ditch Witch (Walk Behind), Road Finishing Machines, Rollers five tons and under, Tugger Hoists, Dual Purpose Trucks, Fork Lifts, and Dempsey Dumpers, Fireperson.

Effective Period: 7/1/2016 - 6/30/2017
Wage Rate per Hour: $60.69
Supplemental Benefit Rate per Hour: $35.41
Supplemental Note: $63.67 on overtime
Shift Wage Rate: $97.10

Engineer - Heavy Construction Maintenance Engineer I

Installing, Repairing, Maintaining, Dismantling and Manning of all equipment including Steel Cutting, Bending and Heat Sealing Machines, Mechanical Heaters, Grout Pumps, Bentonite Pumps & Plants, Screening Machines, Fusion Coupling Machines, Tunnel Boring Machines Moles and Machines of a similar nature, Power Packs, Mechanical Hydraulic Jacks; all drill rigs including but not limited to Churn, Rotary Caisson, Raised Bore & Drills

of a similar nature; Personnel, Inspection & Safety Boats or any boats used to perform functions of same, Mine Hoists, Whirlies, all Climbing Cranes, all Tower Cranes, including but not limited to Truck Mounted and Crawler Type and machines of similar nature; Maintaining Hydraulic Drills and machines of a similar nature; Well Point System-Installation and dismantling; Burning, Welding, all Pumps regardless of size and/or motor power, except River Cofferdam Pumps and Wells Point Pumps; Motorized Buggies (three or more); equipment used in the cleaning and televising of sewers, but not limited to jet-rodder/vacuum truck, vacall/vactor, closed circuit television inspection equipment; high powered water pumps, jet pumps; screed machines and concrete finishing machines of a similar nature; vermeers.

Effective Period: 7/1/2016 - 6/30/2017
Wage Rate per Hour: $63.68
Supplemental Benefit Rate per Hour: $35.41
Supplemental Note: $63.67 on overtime
Shift Wage Rate: $101.89

Engineer - Heavy Construction Maintenance Engineer II

On Base Mounted Tower Cranes

Effective Period: 7/1/2016 - 6/30/2017
Wage Rate per Hour: $83.66
Supplemental Benefit Rate per Hour: $35.41
Supplemental Note: $63.67 on overtime
Shift Wage Rate: $133.86

Engineer - Heavy Construction Maintenance Engineer III

On Generators, Light Towers

Effective Period: 7/1/2016 - 6/30/2017
Wage Rate per Hour: $42.01
Supplemental Benefit Rate per Hour: $35.41
Supplemental Note: $63.67 on overtime
Shift Wage Rate: $67.22

Engineer - Heavy Construction Maintenance Engineer IV

On Pumps and Mixers including mud sucking

Effective Period: 7/1/2016 - 6/30/2017
Wage Rate per Hour: $43.11
Supplemental Benefit Rate per Hour: $35.41
Supplemental Note: $63.67 on overtime
Shift Wage Rate: $68.98

Engineer - Heavy Construction Oilers I

Gradalls, Cold Planer Grader, Concrete Pumps, Driving Truck Cranes, Driving and Operating Fuel and Grease Trucks.

Effective Period: 7/1/2016 - 6/30/2017

Wage Rate per Hour: $57.42
Supplemental Benefit Rate per Hour: $35.41
Supplemental Note: $63.67 on overtime
Shift Wage Rate: $91.87

Engineer - Heavy Construction Oilers II

All gasoline, electric, diesel or air operated Shovels, Draglines, Backhoes, Keystones, Pavers, Gunite Machines, Battery of Compressors, Crawler Cranes, two-person Trenching Machines.

Effective Period: 7/1/2016 - 6/30/2017
Wage Rate per Hour: $39.70
Supplemental Benefit Rate per Hour: $35.41
Supplemental Note: $63.67 on overtime
Shift Wage Rate: $63.52

Engineer - Steel Erection Maintenance Engineers

Derrick, Travelers, Tower, Crawler Tower and Climbing Cranes

Effective Period: 7/1/2016 - 6/30/2017
Wage Rate per Hour: $61.13
Supplemental Benefit Rate per Hour: $35.41
Supplemental Note: $63.67 on overtime
Shift Wage Rate: $97.81

Engineer - Steel Erection Oiler I

On a Truck Crane

Effective Period: 7/1/2016 - 6/30/2017
Wage Rate per Hour: $57.21
Supplemental Benefit Rate per Hour: $35.41
Supplemental Note: $63.67 on overtime
Shift Wage Rate: $91.54

Engineer - Steel Erection Oiler II

On a Crawler Crane

Effective Period: 7/1/2016 - 6/30/2017
Wage Rate per Hour: $43.54
Supplemental Benefit Rate per Hour: $35.41
Supplemental Note: $63.67 on overtime
Shift Wage Rate: $69.66

Overtime Description

On jobs of more than one shift, if the next shift employee fails to report for work through any cause over which the employer has no control, the employee on duty who works the next shift continues to work at the single time rate.

Overtime

Double time the regular rate after an 8 hour day.
Double time the regular time rate for Saturday.
Double time the regular rate for Sunday.
Double time the regular rate for work on the following holiday(s).

Paid Holidays

New Year's Day
Lincoln's Birthday
President's Day
Memorial Day
Independence Day
Labor Day
Columbus Day
Veteran's Day
Thanksgiving Day
Day after Thanksgiving
Christmas Day
Employees must work at least one day in the payroll week in which the holiday occurs to receive the paid holiday

---

Engineer - Building Work Maintenance Engineers I

Installing, repairing, maintaining, dismantling (of all equipment including: Steel Cutting and Bending Machines, Mechanical Heaters, Mine Hoists, Climbing Cranes, Tower Cranes, Linden Peine, Lorain, Liebherr, Mannes, or machines of a similar nature, Well Point Systems, Deep Well Pumps, Concrete Mixers with loading Device, Concrete Plants, Motor Generators when used for temporary power and lights), skid steer machines of a similar nature including bobcat.

Effective Period: 7/1/2016 - 6/30/2017
Wage Rate per Hour: $58.30
Supplemental Benefit Rate per Hour: $35.41
Supplemental Note: $63.67 on overtime

Engineer - Building Work Maintenance Engineers II

On Pumps, Generators, Mixers and Heaters

Effective Period: 7/1/2016 - 6/30/2017
Wage Rate per Hour: $45.28
Supplemental Benefit Rate per Hour: $35.41
Supplemental Note: $63.67 on overtime

Engineer - Building Work Oilers I

All gasoline, electric, diesel or air operated Gradealls: Concrete Pumps, Overhead Cranes in Power Houses: Their duties shall be to assist the Engineer in oiling, greasing and repairing of all machines; Driving Truck Cranes: Driving and Operating Fuel and Grease Trucks, Cherrypickers (hydraulic cranes) over 70,000 GVW, and machines of a similar nature.

Effective Period: 7/1/2016 - 6/30/2017
Wage Rate per Hour: $55.42
Supplemental Benefit Rate per Hour: $35.41
Supplemental Note: $63.67 on overtime

Engineer - Building Work Oilers II

Oilers on Crawler Cranes, Backhoes, Trenching Machines, Gunite Machines, Compressors (three or more in Battery).

Effective Period: 7/1/2016 - 6/30/2017
Wage Rate per Hour: $41.16
Supplemental Benefit Rate per Hour: $35.41
Supplemental Note: $63.67 on overtime

Overtime Description
On jobs of more than one shift, if an Employee fails to report for work through any cause over which the Employer has no control, the Employee on duty will continue to work at the rate of single time.

Overtime
Double time the regular rate after an 8 hour day.
Double time the regular time rate for Saturday.
Double time the regular rate for Sunday.
Double time the regular rate for work on the following holiday(s).

Paid Holidays
New Year's Day
Lincoln's Birthday
President's Day
Memorial Day
Independence Day
Labor Day
Columbus Day
Veteran's Day
Thanksgiving Day
Christmas Day
Employees must work at least one day in the payroll week in which the holiday occurs to receive the paid holiday

Shift Rates
Off Shift: double time the regular hourly rate.

(Local #15)

ENGINEER - CITY SURVEYOR AND CONSULTANT

Party Chief

Effective Period: 7/1/2016 - 6/30/2017
Wage Rate per Hour: $38.18
Supplemental Benefit Rate per Hour: $20.15
Supplemental Note: Overtime Benefit Rate - $27.65 per hour (time & one half) $35.15 per hour (double time).

Instrument Person

Effective Period: 7/1/2016 - 6/30/2017
Wage Rate per Hour: $31.47
Supplemental Benefit Rate per Hour: $20.15
Supplemental Note: Overtime Benefit Rate - $27.65 per hour (time & one half) $35.15 per hour (double time).

Rodperson

Effective Period: 7/1/2016 - 6/30/2017
Wage Rate per Hour: $27.24
Supplemental Benefit Rate per Hour: $20.15
Supplemental Note: Overtime Benefit Rate - $27.65 per hour (time & one half) $35.15 per hour (double time).

Overtime Description

Time and one half the regular rate after an 8 hour day, Time and one half the regular rate for Saturday for the first eight hours worked, Double time the regular time rate for Saturday for work performed in excess of eight hours, Double time the regular rate for Sunday and Double time the regular rate for work on a holiday.

Paid Holidays

New Year's Day
Lincoln's Birthday
President's Day
Memorial Day
Independence Day
Labor Day
Columbus Day
Veteran's Day
Thanksgiving Day
Day after Thanksgiving
Christmas Day
Employees must work at least one day in the payroll week in which the holiday occurs to receive the paid holiday

(Operating Engineer Local #15-D)

ENGINEER - FIELD (BUILDING CONSTRUCTION)
(Construction of Building Projects, Concrete Superstructures, etc.)

Field Engineer - BC Party Chief

Effective Period: 7/1/2016 - 6/30/2017
Wage Rate per Hour: $60.10
Supplemental Benefit Rate per Hour: $32.15
Supplemental Note: Overtime Benefit Rate - $44.90 per hour (time & one half) $57.65 per hour (double time).

Field Engineer - BC Instrument Person

Effective Period: 7/1/2016 - 6/30/2017
Wage Rate per Hour: $46.69
Supplemental Benefit Rate per Hour: $32.15
Supplemental Note: Overtime Benefit Rate - $44.90 per hour (time & one half) $57.65 per hour (double time).

Field Engineer - BC Rodperson

Effective Period: 7/1/2016 - 6/30/2017
Wage Rate per Hour: $30.20
Supplemental Benefit Rate per Hour: $32.15
Supplemental Note: Overtime Benefit Rate - $44.90 per hour (time & one half) $57.65 per hour (double time).

Overtime Description

Time and one half the regular rate after a 7 hour work and time and one half the regular rate for Saturday for the first seven hours worked, Double time the regular time rate for Saturday for work performed in excess of seven hours, Double time the regular rate for Sunday and Double time the regular rate for work on a holiday.

Paid Holidays

New Year's Day
President's Day
Good Friday
Memorial Day
Independence Day
Labor Day
Columbus Day
Veteran's Day
Thanksgiving Day
Christmas Day
Employees must work at least one day in the payroll week in which the holiday occurs to receive the paid holiday

(Operating Engineer Local #15-D)

ENGINEER - FIELD (HEAVY CONSTRUCTION)

(Construction of Roads, Tunnels, Bridges, Sewers, Building Foundations, Engineering Structures etc.)

Field Engineer - HC Party Chief

Effective Period: 7/1/2016 - 6/30/2017
Wage Rate per Hour: $68.09
Supplemental Benefit Rate per Hour: $33.54
Supplemental Note: Overtime benefit rate - $46.86 per hour (time & one half), $60.18 per hour (double time).

Field Engineer - HC Instrument Person

Effective Period: 7/1/2016 - 6/30/2017
Wage Rate per Hour: $49.98
Supplemental Benefit Rate per Hour: $33.54
Supplemental Note: Overtime benefit rate - $46.86 per hour (time & one half), $60.18 per hour (double time).

Field Engineer - HC Rodperson

Effective Period: 7/1/2016 - 6/30/2017
Wage Rate per Hour: $41.93
Supplemental Benefit Rate per Hour: $33.54
Supplemental Note: Overtime benefit rate - $46.86 per hour (time & one half), $60.18 per hour (double time).

Overtime Description

Time and one half the regular rate after an 8 hour day, Time and one half the regular rate for Saturday for the first eight hours worked, Double time the regular time rate for Saturday for work performed in excess of eight hours, Double time the regular rate for Sunday and Double time the regular rate for work on a holiday.

Paid Holidays

New Year's Day
Lincoln's Birthday
President's Day
Memorial Day
Independence Day
Labor Day
Columbus Day
Veteran's Day
Thanksgiving Day
Christmas Day
Employees must work at least one day in the payroll week in which the holiday occurs to receive the paid holiday

(Operating Engineer Local #15-D)

ENGINEER - FIELD (STEEL ERECTION)

Field Engineer - Steel Erection Party Chief

Effective Period: 7/1/2016 - 6/30/2017
Wage Rate per Hour: $63.64
Supplemental Benefit Rate per Hour: $33.04
Supplemental Note: Overtime benefit rate - $46.11 per hour (time & one half), $59.18 per hour (double time).

Field Engineer - Steel Erection Instrument Person

Effective Period: 7/1/2016 - 6/30/2017
Wage Rate per Hour: $49.59
Supplemental Benefit Rate per Hour: $33.04
Supplemental Note: Overtime benefit rate - $46.11 per hour (time & one half), $59.18 per hour (double time).

Field Engineer - Steel Erection Rodperson

Effective Period: 7/1/2016 - 6/30/2017
Wage Rate per Hour: $33.20
Supplemental Benefit Rate per Hour: $33.04
Supplemental Note: Overtime benefit rate - $46.11 per hour (time & one half), $59.18 per hour (double time).

Overtime Description
Time and one half the regular rate for Saturday for the first eight hours worked.
Double time the regular rate for Saturday for work performed in excess of eight hours.

Overtime
Time and one half the regular rate after an 8 hour day.
Double time the regular rate for Sunday.
Double time the regular rate for work on the following holiday(s).

Paid Holidays
New Year's Day
Lincoln's Birthday
President's Day
Memorial Day
Independence Day
Labor Day
Columbus Day
Veteran's Day
Thanksgiving Day
Christmas Day
Employees must work at least one day in the payroll week in which the holiday occurs to receive the paid holiday

(Operating Engineer Local #15-D)

ENGINEER - OPERATING

Operating Engineer - Road & Heavy Construction I

Back Filling Machines, Cranes, Mucking Machines and Dual Drum Paver.

Effective Period: 7/1/2016 - 6/30/2017
Wage Rate per Hour: $73.90
Supplemental Benefit Rate per Hour: $31.10
Supplemental Note: $56.50 overtime hours
Shift Wage Rate: $118.24

Operating Engineer - Road & Heavy Construction II

Backhoes, Power Shovels, Hydraulic Clam Shells, Steel Erection, Moles and machines of a similar nature.

Effective Period: 7/1/2016 - 6/30/2017
Wage Rate per Hour: $76.51
Supplemental Benefit Rate per Hour: $31.10
Supplemental Note: $56.50 overtime hours
Shift Wage Rate: $122.42

Operating Engineer - Road & Heavy Construction III

Mine Hoists, Cranes, etc. (Used as Mine Hoists)

Effective Period: 7/1/2016 - 6/30/2017
Wage Rate per Hour: $78.96
Supplemental Benefit Rate per Hour: $31.10
Supplemental Note: $56.50 overtime hours
Shift Wage Rate: $126.34

Operating Engineer - Road & Heavy Construction IV

Gradealls, Keystones, Cranes on land or water (with digging buckets), Bridge Cranes, Vermeer Cutter and machines of a similar nature, Trenching Machines.

Effective Period: 7/1/2016 - 6/30/2017
Wage Rate per Hour: $77.07
Supplemental Benefit Rate per Hour: $31.10
Supplemental Note: $56.50 overtime hours
Shift Wage Rate: $123.31

Operating Engineer - Road & Heavy Construction V

Pile Drivers & Rigs (employing Dock Builder foreperson): Derrick Boats, Tunnel Shovels.

Effective Period: 7/1/2016 - 6/30/2017
Wage Rate per Hour: $75.55
Supplemental Benefit Rate per Hour: $31.10
Supplemental Note: $56.50 overtime hours
Shift Wage Rate: $120.88

Operating Engineer - Road & Heavy Construction VI

Mixers (Concrete with loading attachment), Concrete Pavers, Cableways, Land Derricks, Power Houses (Low Air Pressure Units).

Effective Period: 7/1/2016 - 6/30/2017
Wage Rate per Hour: $71.78
Supplemental Benefit Rate per Hour: $31.10
Supplemental Note: $56.50 overtime hours
Shift Wage Rate: $114.85

Operating Engineer - Road & Heavy Construction VII

Barrier Movers , Barrier Transport and Machines of a Similar Nature.

Effective Period: 7/1/2016 - 6/30/2017
Wage Rate per Hour: $57.96
Supplemental Benefit Rate per Hour: $31.10
Supplemental Note: $56.50 overtime hours
Shift Wage Rate: $92.74

Operating Engineer - Road & Heavy Construction VIII

Utility Compressors

Effective Period: 7/1/2016 - 6/30/2017
Wage Rate per Hour: $44.98
Supplemental Benefit Rate per Hour: $31.10
Supplemental Note: $56.50 overtime hours
Shift Wage Rate: $56.70

Operating Engineer - Road & Heavy Construction IX

Horizontal Boring Rig

Effective Period: 7/1/2016 - 6/30/2017
Wage Rate per Hour: $68.25
Supplemental Benefit Rate per Hour: $31.10
Supplemental Note: $56.50 overtime hours
Shift Wage Rate: $109.20

Operating Engineer - Road & Heavy Construction X

Elevators (manually operated as personnel hoist).

Effective Period: 7/1/2016 - 6/30/2017
Wage Rate per Hour: $62.73
Supplemental Benefit Rate per Hour: $31.10
Supplemental Note: $56.50 overtime hours
Shift Wage Rate: $100.37

Operating Engineer - Road & Heavy Construction XI

Compressors (Portable 3 or more in battery), Driving of Truck Mounted Compressors, Well-point Pumps, Tugger Machines Well Point Pumps, Churn Drill.

Effective Period: 7/1/2016 - 6/30/2017
Wage Rate per Hour: $48.73
Supplemental Benefit Rate per Hour: $31.10
Supplemental Note: $56.50 overtime hours
Shift Wage Rate: $77.97

Operating Engineer - Road & Heavy Construction XII

All Drills and Machines of a similar nature.

Effective Period: 7/1/2016 - 6/30/2017
Wage Rate per Hour: $72.53
Supplemental Benefit Rate per Hour: $31.10
Supplemental Note: $56.50 overtime hours
Shift Wage Rate: $116.05

Operating Engineer - Road & Heavy Construction XIII

Concrete Pumps, Concrete Plant, Stone Crushers, Double Drum Hoist, Power Houses (other than above).

Effective Period: 7/1/2016 - 6/30/2017
Wage Rate per Hour: $70.24
Supplemental Benefit Rate per Hour: $31.10
Supplemental Note: $56.50 overtime hours
Shift Wage Rate: $112.38

Operating Engineer - Road & Heavy Construction XIV

Concrete Mixer

Effective Period: 7/1/2016 - 6/30/2017
Wage Rate per Hour: $67.16
Supplemental Benefit Rate per Hour: $31.10
Supplemental Note: $56.50 overtime hours
Shift Wage Rate: $107.46

Operating Engineer - Road & Heavy Construction XV

Compressors (Portable Single or two in Battery, not over 100 feet apart), Pumps (River Cofferdam) and Welding Machines, Push Button Machines, All Engines Irrespective of Power (Power-Pac) used to drive auxiliary equipment, Air, Hydraulic, etc.

Effective Period: 7/1/2016 - 6/30/2017
Wage Rate per Hour: $45.27

Supplemental Benefit Rate per Hour: $31.10
Supplemental Note: $56.50 overtime hours
Shift Wage Rate: $72.43

Operating Engineer - Road & Heavy Construction XVI

Concrete Breaking Machines, Hoists (Single Drum), Load Masters, Locomotives (over ten tons) and Dinkies over ten tons, Hydraulic Crane-Second Engineer.

Effective Period: 7/1/2016 - 6/30/2017
Wage Rate per Hour: $64.13
Supplemental Benefit Rate per Hour: $31.10
Supplemental Note: $56.50 overtime hours
Shift Wage Rate: $102.61

Operating Engineer - Road & Heavy Construction XVII

On-Site concrete plant engineer, On-site Asphalt Plant Engineer, and Vibratory console.

Effective Period: 7/1/2016 - 6/30/2017
Wage Rate per Hour: $64.63
Supplemental Benefit Rate per Hour: $31.10
Supplemental Note: $56.50 overtime hours
Shift Wage Rate: $103.41

Operating Engineer - Road & Heavy Construction XVIII

Tower Crane

Effective Period: 7/1/2016 - 6/30/2017
Wage Rate per Hour: $92.76
Supplemental Benefit Rate per Hour: $31.10
Supplemental Note: $56.50 overtime hours
Shift Wage Rate: $148.42

Operating Engineer - Paving I

Asphalt Spreaders, Autogrades (C.M.I.), Roto/Mil

Effective Period: 7/1/2016 - 6/30/2017
Wage Rate per Hour: $71.78
Supplemental Benefit Rate per Hour: $31.10
Supplemental Note: $56.50 overtime hours
Shift Wage Rate: $114.85

Operating Engineer - Paving II

Asphalt Roller

Effective Period: 7/1/2016 - 6/30/2017

Wage Rate per Hour: $69.91
Supplemental Benefit Rate per Hour: $31.10
Supplemental Note: $56.50 overtime hours
Shift Wage Rate: $111.86

Operating Engineer - Paving III

Asphalt Plants

Effective Period: 7/1/2016 - 6/30/2017
Wage Rate per Hour: $59.14
Supplemental Benefit Rate per Hour: $31.10
Supplemental Note: $56.50 overtime hours
Shift Wage Rate: $94.62

Operating Engineer - Concrete I

Cranes

Effective Period: 7/1/2016 - 6/30/2017
Wage Rate per Hour: $76.73
Supplemental Benefit Rate per Hour: $31.10
Supplemental Note: $56.50 overtime hours

Operating Engineer - Concrete II

Compressors

Effective Period: 7/1/2016 - 6/30/2017
Wage Rate per Hour: $45.62
Supplemental Benefit Rate per Hour: $31.10
Supplemental Note: $56.50 overtime hours

Operating Engineer - Concrete III

Micro-traps (Negative Air Machines), Vac-All Remediation System.

Effective Period: 7/1/2016 - 6/30/2017
Wage Rate per Hour: $61.31
Supplemental Benefit Rate per Hour: $31.10
Supplemental Note: $56.50 overtime hours

Operating Engineer - Steel Erection I

Three Drum Derricks

Effective Period: 7/1/2016 - 6/30/2017
Wage Rate per Hour: $79.54
Supplemental Benefit Rate per Hour: $31.10
Supplemental Note: $56.50 overtime hours

Shift Wage Rate: $127.26

Operating Engineer - Steel Erection II

Cranes, 2 Drum Derricks, Hydraulic Cranes, Fork Lifts and Boom Trucks.

Effective Period: 7/1/2016 - 6/30/2017
Wage Rate per Hour: $76.43
Supplemental Benefit Rate per Hour: $31.10
Supplemental Note: $56.50 overtime hours
Shift Wage Rate: $122.29

Operating Engineer - Steel Erection III

Compressors, Welding Machines.

Effective Period: 7/1/2016 - 6/30/2017
Wage Rate per Hour: $45.34
Supplemental Benefit Rate per Hour: $31.10
Supplemental Note: $56.50 overtime hours
Shift Wage Rate: $72.54

Operating Engineer - Steel Erection IV

Compressors - Not Combined with Welding Machine.

Effective Period: 7/1/2016 - 6/30/2017
Wage Rate per Hour: $43.17
Supplemental Benefit Rate per Hour: $31.10
Supplemental Note: $56.50 overtime hours
Shift Wage Rate: $69.07

Operating Engineer - Building Work I

Forklifts, Plaster (Platform machine), Plaster Bucket, Concrete Pump and all other equipment used for hoisting material.

Effective Period: 7/1/2016 - 6/30/2017
Wage Rate per Hour: $63.12
Supplemental Benefit Rate per Hour: $31.10
Supplemental Note: $56.50 overtime hours

Operating Engineer - Building Work II

Compressors, Welding Machines (Cutting Concrete-Tank Work), Paint Spraying, Sandblasting, Pumps (with the exclusion of Concrete Pumps), All Engines irrespective of Power (Power-Pac) used to drive Auxiliary Equipment, Air, Hydraulic, Jacking System, etc.

Effective Period: 7/1/2016 - 6/30/2017
Wage Rate per Hour: $47.26

Supplemental Benefit Rate per Hour: $31.10
Supplemental Note: $56.50 overtime hours

Operating Engineer - Building Work III

Double Drum

Effective Period: 7/1/2016 - 6/30/2017
Wage Rate per Hour: $71.85
Supplemental Benefit Rate per Hour: $31.10
Supplemental Note: $56.50 overtime hours

Operating Engineer - Building Work IV

Stone Derrick, Cranes, Hydraulic Cranes Boom Trucks.

Effective Period: 7/1/2016 - 6/30/2017
Wage Rate per Hour: $76.12
Supplemental Benefit Rate per Hour: $31.10
Supplemental Note: $56.50 overtime hours

Operating Engineer - Building Work V

Dismantling and Erection of Cranes, Relief Engineer.

Effective Period: 7/1/2016 - 6/30/2017
Wage Rate per Hour: $70.13
Supplemental Benefit Rate per Hour: $31.10
Supplemental Note: $56.50 overtime hours

Operating Engineer - Building Work VI

4 Pole Hoist, Single Drum Hoists.

Effective Period: 7/1/2016 - 6/30/2017
Wage Rate per Hour: $69.39
Supplemental Benefit Rate per Hour: $31.10
Supplemental Note: $56.50 overtime hours

Operating Engineer - Building Work VII

Rack & Pinion and House Cars

Effective Period: 7/1/2016 - 6/30/2017
Wage Rate per Hour: $55.17
Supplemental Benefit Rate per Hour: $31.10
Supplemental Note: $56.50 overtime hours
For New House Car projects Wage Rate per Hour $44.02

Overtime Description

On jobs of more than one shift, if an Employee fails to report for work through any cause over which the Employer has no control, the Employee on duty will continue to work at the rate of single time.

For House Cars and Rack & Pinion only: Overtime paid at time and one-half for all hours in excess of eight hours in a day, Saturday, Sunday and Holidays worked.

Overtime

Double time the regular rate after an 8 hour day.
Double time the regular time rate for Saturday.
Double time the regular rate for Sunday.
Double time the regular rate for work on the following holiday(s).

Paid Holidays

New Year's Day
Lincoln's Birthday
President's Day
Memorial Day
Independence Day
Labor Day
Columbus Day
Veteran's Day
Thanksgiving Day
Day after Thanksgiving
Christmas Day
Employees must work at least one day in the payroll week in which the holiday occurs to receive the paid holiday

Shift Rates

For Steel Erection Only: Shifts may be worked at the single time rate at other than the regular working hours (8:00 A.M. to 4:30 P.M.) on the following work ONLY: Heavy construction jobs on work below the street level, over railroad tracks and on building jobs.

(Operating Engineer Local #14)

FLOOR COVERER

(Interior vinyl composition tile, sheath vinyl linoleum and wood parquet tile including site preparation and synthetic turf not including site preparation)

Floor Coverer

Effective Period: 7/1/2016 - 6/30/2017
Wage Rate per Hour: $50.50
Supplemental Benefit Rate per Hour: $45.88

Overtime

Time and one half the regular rate after an 8 hour day.

Time and one half the regular rate for Saturday.
Double time the regular rate for Sunday.

Overtime Holidays

Double time the regular rate for work on the following holiday(s).
New Year's Day
President's Day
Memorial Day
Independence Day
Labor Day
Columbus Day
Presidential Election Day
Thanksgiving Day
Day after Thanksgiving
Christmas Day

Paid Holidays

1/2 day on Christmas Eve if work is performed in the A.M.
1/2 day on New Year's Eve if work is performed in the A.M.

Shift Rates

Two shifts may be utilized with the first shift working 8:00 A.M. to the end of the shift at the straight time of pay. The second shift will receive one hour at double time rate for the last hour of the shift. (eight for seven, nine for eight).

(Carpenters District Council)

GLAZIER
(New Construction, Remodeling, and Alteration)

Glazier

Effective Period: 7/1/2016 - 6/30/2017
Wage Rate per Hour: $44.45
Supplemental Benefit Rate per Hour: $37.84
Supplemental Note: Supplemental Benefit Overtime Rate: $46.84

Overtime Description

An optional 8th hour can be worked at straight time rate. If 9th hour is worked, then both hours or more (8th & 9th or more) will be at the double time rate of pay.

Overtime

Double time the regular rate after a 7 hour day.
Double time the regular time rate for Saturday.
Double time the regular rate for Sunday.

Overtime Holidays

Double time the regular rate for work on the following holiday(s).
New Year's Day
President's Day
Memorial Day
Independence Day
Labor Day
Thanksgiving Day
Day after Thanksgiving
Christmas Day

Paid Holidays

None

Shift Rates

Shifts shall be any 7 hours beyond 4:00 P.M. for which the glazier shall receive 8 hours pay for 7 hours worked.

(Local #1281)

GLAZIER - REPAIR & MAINTENANCE

(For the Installation of Glass - All repair and maintenance work on a particular building, whenever performed, where the total cumulative contract value is under $127,628. Except where enumerated (i.e. plate glass windows) does not apply to non-residential buildings.)

Craft Jurisdiction for repair, maintenance and fabrication

Plate glass replacement, Residential glass replacement, Residential mirrors and shower doors, Storm windows and storm doors, Residential replacement windows, Herculite door repairs, Door closer repairs, Retrofit apartment house (non commercial buildings), Glass tinting.

Effective Period: 7/1/2016 - 6/30/2017
Wage Rate per Hour: $23.78
Supplemental Benefit Rate per Hour: $20.14

Overtime

Time and one half the regular rate after an 8 hour day.
Double time the regular rate for Sunday.
Time and one half the regular hourly rate after 40 hours in any work week.

Paid Holidays

New Year's Day
President's Day

Memorial Day
Independence Day
Labor Day
Thanksgiving Day
Day after Thanksgiving
Christmas Day

(Local #1281)

HEAT AND FROST INSULATOR

Heat & Frost Insulator

Effective Period: 7/1/2016 - 6/30/2017
Wage Rate per Hour: $57.78
Supplemental Benefit Rate per Hour: $38.96

Overtime Description
Double time shall be paid for supplemental benefits during overtime work.
8th hour paid at time and one half.

Overtime
Double time the regular rate after an 8 hour day.
Double time the regular time rate for Saturday.
Double time the regular rate for Sunday.

Overtime Holidays
Double time the regular rate for work on the following holiday(s).
New Year's Day
Martin Luther King Jr. Day
President's Day
Memorial Day
Independence Day
Columbus Day
Veteran's Day
Thanksgiving Day
Day after Thanksgiving
Christmas Day

Triple time the regular rate for work on the following holiday(s).
Labor Day

Paid Holidays
None

Shift Rates

The first shift shall work seven hours at the regular straight time rate. The second and third shift shall work seven hours the regular straight time hourly rate plus a fourteen percent wage and benefit premium.
Off hour work in occupied or retail buildings may be worked on weekdays with an increment of $1.00 per hour and eight hours pay for seven (7) hours worked. Double time will apply for over seven (7) hours worked on weekdays, weekends or holidays.

(Local #12) (BCA)

HOUSE WRECKER
(TOTAL DEMOLITION)

House Wrecker - Tier A

On all work sites the first, second, eleventh and every third House Wrecker thereafter will be Tier A House Wreckers (i.e. 1st, 2nd, 11th, 14th etc). Other House Wreckers may be Tier B House Wreckers.

Effective Period: 7/1/2016 - 6/30/2017
Wage Rate per Hour: $36.33
Supplemental Benefit Rate per Hour: $27.77

House Wrecker - Tier B

Effective Period: 7/1/2016 - 6/30/2017
Wage Rate per Hour: $25.56
Supplemental Benefit Rate per Hour: $20.45

Overtime
Time and one half the regular rate after an 8 hour day.
Time and one half the regular rate for Saturday.
Double time the regular rate for Sunday.

Overtime Holidays
Double time the regular rate for work on the following holiday(s).
New Year's Day
President's Day
Memorial Day
Independence Day
Labor Day
Thanksgiving Day
Christmas Day

Paid Holidays
None

(Mason Tenders District Council)

IRON WORKER - ORNAMENTAL

Iron Worker - Ornamental

Effective Period: 7/1/2016 - 6/30/2017
Wage Rate per Hour: $43.75
Supplemental Benefit Rate per Hour: $49.57
Supplemental Note: Supplemental benefits are to be paid at the applicable overtime rate when overtime is in effect.

Overtime Description
Time and one half the regular rate after a 7 hour day for a maximum of two hours on any regular work day (the 8th and 9th hour) and double time shall be paid for all work on a regular work day thereafter, time and one half the regular rate for Saturday for the first seven hours of work and double time shall be paid for all work on a Saturday thereafter.

Overtime
Double time the regular rate for Sunday.

Overtime Holidays
Double time the regular rate for work on the following holiday(s).
New Year's Day
President's Day
Memorial Day
Independence Day
Labor Day
Thanksgiving Day
Christmas Day

Paid Holidays
None

Shift Rates
For off shift work - 8 hours pay for 7 hours of work. When two or three shifts are employed on a job, Monday through Friday, the workday for each shift shall be seven hours and paid for ten and one-half hours at the single time rate. When two or three shifts are worked on Saturday, Sunday or holidays, each shift shall be seven hours and paid fifteen and three-quarters hours.

(Local #580)

IRON WORKER - STRUCTURAL

Iron Worker - Structural

Effective Period: 7/1/2016 - 6/30/2017
Wage Rate per Hour: $49.50
Supplemental Benefit Rate per Hour: $69.74
Supplemental Note: Supplemental benefits are to be paid at the applicable overtime rate when overtime is in effect.

Overtime Description
Monday through Friday- the first eight hours are paid at straight time, the 9th and 10th hours are paid at time and one-half the regular rate, all additional weekday overtime is paid at double the regular rate. Saturdays- the first eight hours are paid at time and one-half the regular rate, double time thereafter. Sunday-all shifts are paid at double time.

Overtime
Time and one half the regular rate after an 8 hour day.
Time and one half the regular rate for Saturday.
Double time the regular rate for Sunday.

Overtime Holidays
Double time the regular rate for work on the following holiday(s).
New Year's Day
President's Day
Memorial Day
Independence Day
Labor Day
Thanksgiving Day
Christmas Day

Paid Holidays
1/2 day on Christmas Eve if work is performed in the A.M.
1/2 day on New Year's Eve if work is performed in the A.M.

Shift Rates
Monday through Friday - First Shift: First eight hours are paid at straight time, the 9th & 10th hours are paid at time and a half, double time paid thereafter. Second and third Shifts: First eight hours are paid at time and one-half, double time thereafter. Saturdays: All shifts, first eight hours paid at time and one-half, double time thereafter: Sunday all shifts are paid at double time.

(Local #40 & #361)

LABORER
(Foundation, Concrete, Excavating, Street Pipe Layer and Common)

Laborer

Excavation and foundation work for buildings, heavy construction, engineering work, and hazardous waste removal in connection with the above work. Landscaping tasks in connection with heavy construction work, engineering work and building projects. Projects include, but are not limited to pollution plants, sewers, parks, subways, bridges, highways, etc.

Effective Period: 7/1/2016 - 6/30/2017
Wage Rate per Hour: $41.00
Supplemental Benefit Rate per Hour: $38.63

Overtime
Time and one half the regular rate after an 8 hour day.
Time and one half the regular rate for Saturday.
Double time the regular rate for Sunday.

Overtime Holidays
Double time the regular rate for work on the following holiday(s).
New Year's Day
Memorial Day
Independence Day
Labor Day
Columbus Day
Thanksgiving Day
Christmas Day

Paid Holidays
Labor Day
Thanksgiving Day

Shift Rates
When two shifts are employed, single time rate shall be paid for each shift. When three shifts are found necessary, each shift shall work seven and one half hours (7 ½), but shall be paid for eight (8) hours of labor, and be permitted one half hour for lunch.

(Local #731)

LANDSCAPING
(Landscaping tasks, as well as tree pruning, tree removing, spraying and maintenance in connection with the planting of street trees and the planting of trees in city parks but not when such activities are performed as part of, or in connection with, other construction or reconstruction projects.)

Landscaper (Above 6 years experience)

Effective Period: 7/1/2016 - 6/30/2017
Wage Rate per Hour: $27.00
Supplemental Benefit Rate per Hour: $14.55

Landscaper (3 - 6 years experience)

Effective Period: 7/1/2016 - 6/30/2017
Wage Rate per Hour: $26.00
Supplemental Benefit Rate per Hour: $14.55

Landscaper (up to 3 years experience)

Effective Period: 7/1/2016 - 6/30/2017
Wage Rate per Hour: $23.50
Supplemental Benefit Rate per Hour: $14.55

Groundperson

Effective Period: 7/1/2016 - 6/30/2017
Wage Rate per Hour: $23.50
Supplemental Benefit Rate per Hour: $14.55

Tree Remover / Pruner

Effective Period: 7/1/2016 - 6/30/2017
Wage Rate per Hour: $32.00
Supplemental Benefit Rate per Hour: $14.55

Landscaper Sprayer (Pesticide Applicator)

Effective Period: 7/1/2016 - 6/30/2017
Wage Rate per Hour: $22.00
Supplemental Benefit Rate per Hour: $14.55

Watering - Plant Maintainer

Effective Period: 7/1/2016 - 6/30/2017
Wage Rate per Hour: $17.00
Supplemental Benefit Rate per Hour: $14.55

Overtime Description

For all overtime work performed, supplemental benefits shall include an additional seventy-five ($0.75) cents per hour.

Overtime

Time and one half the regular rate after an 8 hour day.

Time and one half the regular rate for Saturday.
Double time the regular rate for Sunday.
Time and one half the regular rate for work on a holiday plus the day's pay.

Paid Holidays

New Year's Day
Memorial Day
Independence Day
Labor Day
Thanksgiving Day
Christmas Day

Shift Rates

Work performed on a 4pm to 12am shift has a 15% differential. Work performed on a 12am to 8am shift has a 20% differential.

(Local #175)

MARBLE MECHANIC

Marble Setter

Effective Period: 7/1/2016 - 12/31/2016
Wage Rate per Hour: $52.32
Supplemental Benefit Rate per Hour: $37.64

Effective Period: 1/1/2017 - 6/30/2017
Wage Rate per Hour: $52.74
Supplemental Benefit Rate per Hour: $38.67

Marble Finisher

Effective Period: 7/1/2016 - 12/31/2016
Wage Rate per Hour: $41.11
Supplemental Benefit Rate per Hour: $35.91

Effective Period: 1/1/2017 - 6/30/2017
Wage Rate per Hour: $41.46
Supplemental Benefit Rate per Hour: $36.64

Marble Polisher

Effective Period: 7/1/2016 - 12/31/2016
Wage Rate per Hour: $37.49
Supplemental Benefit Rate per Hour: $27.80

Effective Period: 1/1/2017 - 6/30/2017
Wage Rate per Hour: $37.93
Supplemental Benefit Rate per Hour: $28.33

Overtime Description
Supplemental Benefit contributions are to be made at the applicable overtime rates. Time and one half the regular rate after a 7 hour day or time and one half the regular rate after an 8 hour day - chosen by Employer at the start of the project and then would last for the full duration of the project.

Overtime
Time and one half the regular rate for Saturday.
Double time the regular rate for Sunday.

Overtime Holidays
Double time the regular rate for work on the following holiday(s).
New Year's Day
President's Day
Good Friday
Memorial Day
Independence Day
Labor Day
Columbus Day
Veteran's Day
Thanksgiving Day
Day after Thanksgiving
Christmas Day

Paid Holidays
None

(Local #7)

MASON TENDER

Mason Tender

Effective Period: 7/1/2016 - 6/30/2017
Wage Rate per Hour: $37.55
Supplemental Benefit Rate per Hour: $29.04

Overtime
Time and one half the regular rate after an 8 hour day.
Time and one half the regular rate for Saturday.
Double time the regular rate for Sunday.

Saturday may be used as a make-up day at straight time when a day is lost during that week to inclement weather.

Overtime Holidays

Double time the regular rate for work on the following holiday(s).
New Year's Day
President's Day
Memorial Day
Independence Day
Labor Day
Thanksgiving Day
Christmas Day

Paid Holidays

None

Shift Rates

The Employer may work two (2) shifts with the first shift at the straight time wage rate and the second shift receiving eight (8) hours paid for seven (7) hours work at the straight time wage rate.

(Local #79)

MASON TENDER (INTERIOR DEMOLITION WORKER)

(The erection, building, moving, servicing and dismantling of enclosures, scaffolding, barricades, protection and site safety structures etc., on Interior Demolition jobs.)

Mason Tender Tier A

Effective Period: 7/1/2016 - 6/30/2017
Wage Rate per Hour: $36.19
Supplemental Benefit Rate per Hour: $22.95

Mason Tender Tier B

On Interior Demolition job sites 33 1/3 % of the employees shall be classified as Tier A Interior Demolition Workers and 66 2/3 % shall be classified as Tier B Interior Demolition Workers; provided that the employer may employ more than 33 1/3 % Tier A Interior Demolition Workers on the job site. Where the number of employees on a job site is not divisible by 3, the first additional employee (above the number of employees divisible by three) shall be a Tier B Interior Demolition Worker, and the second additional employee shall be a Tier A Interior Demolition Worker.

Effective Period: 7/1/2016 - 6/30/2017
Wage Rate per Hour: $25.38

Supplemental Benefit Rate per Hour: $17.27

Overtime
Time and one half the regular rate after an 8 hour day.
Time and one half the regular rate for Sunday.

Overtime Holidays
Double time the regular rate for work on the following holiday(s).
New Year's Day
President's Day
Memorial Day
Independence Day
Labor Day
Thanksgiving Day
Christmas Day

Paid Holidays
None

(Local #79)

METALLIC LATHER

Metallic Lather

Effective Period: 7/1/2016 - 6/30/2017
Wage Rate per Hour: $44.53
Supplemental Benefit Rate per Hour: $42.67
Supplemental Note: Supplemental benefits for overtime are paid at the appropriate overtime rate.

Overtime Description
Overtime would be time and one half the regular rate after a seven (7) or eight (8) hours workday, which would be set at the start of the job.

Overtime
Time and one half the regular rate for Saturday.
Double time the regular rate for Sunday.

Overtime Holidays
Double time the regular rate for work on the following holiday(s).
New Year's Day
Washington's Birthday
Memorial Day
Independence Day
Labor Day
Columbus Day

Thanksgiving Day
Christmas Day

Paid Holidays

1/2 day on Christmas Eve if work is performed in the A.M.
1/2 day on New Year's Eve if work is performed in the A.M.

Shift Rates

There will be no shift differential paid on the first shift if more than one shift is employed. The shift differential will remain $12/hour on the second and third shift for the first eight (8) hours if worked. There will be no pyramiding on overtime worked on second and third shifts. The time and one half (1.5x) rate will be against the base wage rate, not the shift differential

(Local #46)

MILLWRIGHT

Millwright

Effective Period: 7/1/2016 - 6/30/2017
Wage Rate per Hour: $51.50
Supplemental Benefit Rate per Hour: $52.41

Overtime

Time and one half the regular rate after an 8 hour day.
Time and one half the regular rate for Saturday.
Double time the regular rate for Sunday.
Saturday may be used as a make-up day at straight time when a day is lost during that week to inclement weather.

Overtime Holidays

Double time the regular rate for work on the following holiday(s).
New Year's Day
President's Day
Good Friday
Memorial Day
Independence Day
Labor Day
Columbus Day
Presidential Election Day
Thanksgiving Day
Christmas Day

Paid Holidays

1/2 day on Christmas Eve if work is performed in the A.M.
1/2 day on New Year's Eve if work is performed in the A.M.

Shift Rates

The first shift shall receive the straight time rate of pay. The second shift receives the straight time rate of pay plus fifteen (15%) per cent. Members of the second shift shall be allowed one half hour to eat, with this time being included in the hours of the workday established. There must be a first shift to work a second shift. All additional hours worked shall be paid at the time and one-half rate of pay plus fifteen (15%) per cent for weekday hours.

(Local #740)

MOSAIC MECHANIC

Mosaic Mechanic - Mosaic & Terrazzo Mechanic

Effective Period: 7/1/2016 - 6/30/2017
Wage Rate per Hour: $46.52
Supplemental Benefit Rate per Hour: $39.84
Supplemental Note: Supplemental benefits for overtime to be paid at the rate of $50.86 per hour.

Mosaic Mechanic - Mosaic & Terrazzo Finisher

Effective Period: 7/1/2016 - 6/30/2017
Wage Rate per Hour: $44.91
Supplemental Benefit Rate per Hour: $39.83
Supplemental Note: Supplemental benefits for overtime to be paid at the rate of $50.85 per hour.

Mosaic Mechanic - Machine Operator Grinder

Effective Period: 7/1/2016 - 6/30/2017
Wage Rate per Hour: $44.91
Supplemental Benefit Rate per Hour: $39.83
Supplemental Note: Supplemental benefits for overtime to be paid at the rate of $50.85 per hour.

Overtime

Time and one half the regular rate after a 7 hour day.
Time and one half the regular rate for Saturday.
Double time the regular rate for Sunday.

Overtime Holidays

Double time the regular rate for work on the following holiday(s).
New Year's Day
Washington's Birthday
Good Friday
Independence Day
Labor Day
Columbus Day

Veteran's Day
Thanksgiving Day
Day after Thanksgiving
Christmas Day

Paid Holidays
None

(Local #7)

PAINTER

Painter - Brush & Roller

Effective Period: 7/1/2016 - 4/30/2017
Wage Rate per Hour: $42.50
Supplemental Benefit Rate per Hour: $26.62
Supplemental Note: $31.25 on overtime

Effective Period: 5/1/2017 - 6/30/2017
Wage Rate per Hour: $44.10
Supplemental Benefit Rate per Hour: $27.02
Supplemental Note: $ 31.65 on overtime

Spray & Scaffold / Decorative / Sandblast

Effective Period: 7/1/2016 - 4/30/2017
Wage Rate per Hour: $45.50
Supplemental Benefit Rate per Hour: $26.62
Supplemental Note: $ 31.25 on overtime

Effective Period: 5/1/2017 - 6/30/2017
Wage Rate per Hour: $47.10
Supplemental Benefit Rate per Hour: $27.02
Supplemental Note: $ 31.65 on overtime

Overtime
Time and one half the regular rate after a 7 hour day.
Time and one half the regular rate for Saturday.
Time and one half the regular rate for Sunday.

Overtime Holidays
Time and one half the regular rate for work on the following holiday(s).
New Year's Day
President's Day
Memorial Day

Independence Day
Labor Day
Columbus Day
Thanksgiving Day
Christmas Day

Paid Holidays

None

(District Council of Painters #9)

PAINTER - METAL POLISHER

METAL POLISHER

Effective Period: 7/1/2016 - 6/30/2017
Wage Rate per Hour: $28.88
Supplemental Benefit Rate per Hour: $6.96

METAL POLISHER - NEW CONSTRUCTION

Effective Period: 7/1/2016 - 6/30/2017
Wage Rate per Hour: $29.83
Supplemental Benefit Rate per Hour: $6.96

METAL POLISHER - SCAFFOLD OVER 34 FEET

Effective Period: 7/1/2016 - 6/30/2017
Wage Rate per Hour: $32.38
Supplemental Benefit Rate per Hour: $6.96

Overtime Description

All work performed on Saturdays shall be paid at time-in-a half. The exception being; for suspended scaffold work and work deemed as a construction project; an eight (8) hour shift lost during the week due to circumstances beyond the control of the employer, up to amaximumof eight (8) hours per week, may be worked on Saturday at the straight time rate.

Overtime

Time and one half the regular rate after an 8 hour day.
Time and one half the regular rate for Saturday.
Double time the regular rate for Sunday.
Saturday may be used as a make-up day at straight time when a day is lost during that week to inclement weather.
Triple time the regular rate for work on the following holiday(s).

Paid Holidays

New Year's Day
Martin Luther King Jr. Day
President's Day
Memorial Day
Independence Day
Labor Day
Columbus Day
Veteran's Day
Thanksgiving Day
Day after Thanksgiving
Christmas Day

Shift Rates

Four Days a week at Ten (10) hours straight a day.

Local 8A-28A

PAINTER - STRIPER

Striper (paint)

Effective Period: 7/1/2016 - 6/30/2017
Wage Rate per Hour: $35.00
Supplemental Benefit Rate per Hour: $12.32
Supplemental Note: Overtime Supplemental Benefit rate - $8.02; New Hire Rate (0-3 months) - $0.00

Lineperson (thermoplastic)

Effective Period: 7/1/2016 - 6/30/2017
Wage Rate per Hour: $39.00
Supplemental Benefit Rate per Hour: $12.32
Supplemental Note: Overtime Supplemental Benefit rate - $8.02; New Hire Rate (0-3 months) - $0.00

Overtime

Time and one half the regular rate after an 8 hour day.
Time and one half the regular rate for Saturday.
Double time the regular rate for Sunday.
Time and one half the regular rate for work on the following holiday(s).

Paid Holidays

New Year's Day
Good Friday
Memorial Day
Independence Day
Labor Day

Columbus Day
Presidential Election Day
Thanksgiving Day
Day after Thanksgiving
Christmas Day

Shift Rates
Employees hired before April 1, 2003: 15% night shift premium differential for work commenced at 9:00 PM or later.

Vacation
Employees with one to two years service shall accrue vacation based on hours worked: 250 hours worked - 1 day vacation; 500 hours worked - 2 days vacation; 750 hours worked - 3 days vacation; 900 hours worked - 4 days vacation; 1,000 hours worked - 5 days vacation. Employees with two to five years service receive two weeks vacation. Employees with five to twenty years service receive three weeks vacation. Employees with twenty to twenty-five years service receive four weeks vacation. Employees with 25 or more years service receive five weeks vacation. Vacation must be taken during winter months. 2 Personal Days except employees hired after 4/1/12 who do not have 2 years of service.

(Local #917)

PAINTER - STRUCTURAL STEEL

Painters on Structural Steel

Effective Period: 7/1/2016 - 6/30/2017
Wage Rate per Hour: $49.00
Supplemental Benefit Rate per Hour: $36.08

Painter - Power Tool

Effective Period: 7/1/2016 - 6/30/2017
Wage Rate per Hour: $55.00
Supplemental Benefit Rate per Hour: $36.08

Overtime Description
Supplemental Benefits shall be paid for each hour worked, up to forty (40) hours per week for the period of May 1st to November 15th or up to fifty (50) hours per week for the period of November 16th to April 30th.

Overtime
Time and one half the regular rate after a 7 hour day.
Time and one half the regular rate for Saturday.
Time and one half the regular rate for Sunday.

Overtime Holidays
Double time the regular rate for work on the following holiday(s).
New Year's Day

Memorial Day
Independence Day
Labor Day
Thanksgiving Day
Christmas Day

Paid Holidays
None

Shift Rates
Regular hourly rates plus a ten per cent (10%) differential

(Local #806)

PAPERHANGER

Paperhanger

Effective Period: 7/1/2016 - 6/30/2017
Wage Rate per Hour: $43.58
Supplemental Benefit Rate per Hour: $30.73
Supplemental Note: Supplemental benefits are to be paid at the appropriate straight time and overtime rate.

Overtime
Time and one half the regular rate after a 7 hour day.
Time and one half the regular rate for Saturday.
Time and one half the regular rate for Sunday.

Overtime Holidays
Time and one half the regular rate for work on the following holiday(s).
New Year's Day
President's Day
Memorial Day
Independence Day
Labor Day
Thanksgiving Day
Day after Thanksgiving
Christmas Day

Paid Holidays
None

Shift Rates
Evening shift - 4:30 P.M. to 12:00 Midnight (regular rate of pay); any work performed before 7:00 A.M. shall be at time and one half the regular base rate of pay.

(District Council of Painters #9)

PAVER AND ROADBUILDER

Paver & Roadbuilder - Formsetter

Effective Period: 7/1/2016 - 6/30/2017
Wage Rate per Hour: $45.35
Supplemental Benefit Rate per Hour: $38.95

Paver & Roadbuilder - Laborer

Paving and road construction work, regardless of material used, including but not limited to preparation of job sites, removal of old surfaces, asphalt and/or concrete, by whatever method, including but not limited to milling; laying of concrete; laying of asphalt for temporary, patchwork, and utility paving (but not production paving); site preparation and incidental work before the installation of rubberized materials and similar surfaces; installation and repair of temporary construction fencing; slurry seal coating, maintenance of safety surfaces; play equipment installation, and other related work.

Effective Period: 7/1/2016 - 6/30/2017
Wage Rate per Hour: $41.48
Supplemental Benefit Rate per Hour: $38.95

Production Paver & Roadbuilder - Screed Person

(Production paving is asphalt paving when using a paving machine or on a project where a paving machine is traditionally used)

Adjustment of paving machinery on production paving jobs.

Effective Period: 7/1/2016 - 6/30/2017
Wage Rate per Hour: $45.95
Supplemental Benefit Rate per Hour: $38.95

Production Paver & Roadbuilder - Raker

Effective Period: 7/1/2016 - 6/30/2017
Wage Rate per Hour: $45.35
Supplemental Benefit Rate per Hour: $38.95

Production Paver & Roadbuilder - Shoveler

General laborer (except removal of surfaces - see Paver and Roadbuilder-Laborer) including but not limited to tamper, AC paint and liquid tar work.

Effective Period: 7/1/2016 - 6/30/2017

Wage Rate per Hour: $42.06
Supplemental Benefit Rate per Hour: $38.95

Overtime Description
If an employee works New Year's Day or Christmas Day, they receive the single time rate plus 25%.

Overtime
Time and one half the regular rate after an 8 hour day.
Time and one half the regular rate for Saturday.
Double time the regular rate for Sunday.

Overtime Holidays
Double time the regular rate for work on the following holiday(s).
Memorial Day
Independence Day
Labor Day
Columbus Day
Thanksgiving Day

Shift Rates
When two shifts are employed, the work period for each shift shall be a continuous eight (8) hours. When three shifts are employed, each shift will work seven and one half (7 ½) hours but will be paid for eight (8) hours since only one half (1/2) hour is allowed for meal time.
When two or more shifts are employed, single time will be paid for each shift.

Night Work - On night work, the first eight (8) hours of work will be paid for at the single time rate, except that production paving work shall be paid at 10% over the single time rate for the screed person, rakers and shovelers directly involved only. This differential is to be paid when there is only one shift and the shift works at night. All other workers will be exempt. Hours worked over eight (8) hours during said shift shall be paid for at the time and one-half rate.

(Local #1010)

PLASTERER

Plasterer

Effective Period: 7/1/2016 - 6/30/2017
Wage Rate per Hour: $43.93
Supplemental Benefit Rate per Hour: $28.10

Overtime
Time and one half the regular rate after a 7 hour day.
Time and one half the regular rate for Saturday.
Double time the regular rate for Sunday.

Saturday may be used as a make-up day at straight time when a day is lost during that week to inclement weather.

Overtime Holidays

Double time the regular rate for work on the following holiday(s).
New Year's Day
Martin Luther King Jr. Day
President's Day
Good Friday
Memorial Day
Independence Day
Labor Day
Columbus Day
Presidential Election Day
Thanksgiving Day
Christmas Day

Paid Holidays

None

Shift Rates

When it is not possible to conduct alteration work during regular work hours, in a building occupied by tenants, said work shall proceed on a shift basis: however work over seven (7) hours in any twenty four (24) hour period, the time after seven (7) hours shall be considered overtime.
The second shift shall start at a time between 3:30 p.m. and 7:00 p.m. and shall consist of seven (7) working hours and shall receive eight (8) hours of wages and benefits at the straight time rate. The workers on the second shift shall be allowed one-half (½) hour to eat with this time being included in the seven (7) hours of work.

(Local #262)

PLASTERER - TENDER

Plasterer - Tender

Effective Period: 7/1/2016 - 6/30/2017
Wage Rate per Hour: $37.55
Supplemental Benefit Rate per Hour: $29.04

Overtime

Time and one half the regular rate after an 8 hour day.
Time and one half the regular rate for Saturday.
Double time the regular rate for Sunday.
Saturday may be used as a make-up day at straight time when a day is lost during that week to inclement weather.

Overtime Holidays

Double time the regular rate for work on the following holiday(s).
New Year's Day
Washington's Birthday
Memorial Day
Independence Day
Labor Day
Presidential Election Day
Thanksgiving Day
Christmas Day

Paid Holidays
None

Shift Rates
When work commences outside regular work hours, workers receive an hour additional (differential) wage and supplement payment. Eight hours pay for seven hours work or nine hours pay for eight hours work.

(Mason Tenders District Council)

PLUMBER

Plumber

Effective Period: 7/1/2016 - 6/30/2017
Wage Rate per Hour: $65.67
Supplemental Benefit Rate per Hour: $29.28
Supplemental Note: Overtime supplemental benefit rate per hour: $58.28

Plumber - Temporary Services

Temporary Services - When there are no Plumbers on the job site, there may be three shifts designed to cover the entire twenty-four hour period, including weekends if necessary, at the following rate straight time.

Effective Period: 7/1/2016 - 6/30/2017
Wage Rate per Hour: $52.56
Supplemental Benefit Rate per Hour: $23.40

Overtime Description
Double time the regular rate after a 7 hour day - unless for new construction site work where the plumbing contract price is $1.5 million or less, the hours of labor can be 8 hours per day at the employers option. On Alteration jobs when other mechanical trades at the site are working an eighth hour at straight time, then the plumber shall also work an eighth hour at straight time.

Overtime
Double time the regular time rate for Saturday.
Double time the regular rate for Sunday.

Overtime Holidays

Double time the regular rate for work on the following holiday(s).
New Year's Day
President's Day
Memorial Day
Independence Day
Labor Day
Columbus Day
Veteran's Day
Thanksgiving Day
Day after Thanksgiving
Christmas Day

Shift Rates

Shift work, when directly specified in public agency or authority documents where plumbing contract is $8 million or less, will be permitted. 30% shift premium shall be paid for wages and fringe benefits for 4:00 pm and midnight shifts Monday to Friday. 50% shift premium shall be paid for wages and fringe benefits for 4:00 pm and midnight shift work performed on weekends. For shift work on holidays, double time wages and fringe benefits shall be paid.

(Plumbers Local #1)

PLUMBER (MECHNICAL EQUIPMENT AND SERVICE)

(Mechanical Equipment and Service work shall include any repair and/or replacement of the present plumbing system.)

Plumber

Effective Period: 7/1/2016 - 6/30/2017
Wage Rate per Hour: $39.42
Supplemental Benefit Rate per Hour: $14.19

Overtime

Time and one half the regular rate after an 8 hour day.
Time and one half the regular rate for Saturday.
Time and one half the regular rate for Sunday.

Overtime Holidays

Time and one half the regular rate for work on the following holiday(s).
New Year's Day
President's Day
Memorial Day
Independence Day
Thanksgiving Day

Day after Thanksgiving
Christmas Day

Paid Holidays
None

(Plumbers Local # 1)

PLUMBER (RESIDENTIAL RATES FOR 1, 2 AND 3 FAMILY HOME CONSTRUCTION)

Effective Period: 7/1/2016 - 6/30/2017
Wage Rate per Hour: $45.47
Supplemental Benefit Rate per Hour: $21.26

Overtime
Double time the regular rate after an 8 hour day.
Double time the regular time rate for Saturday.
Double time the regular rate for Sunday.

Overtime Holidays
Double time the regular rate for work on the following holiday(s).
New Year's Day
President's Day
Memorial Day
Independence Day
Labor Day
Columbus Day
Veteran's Day
Thanksgiving Day
Day after Thanksgiving
Christmas Day

Paid Holidays
None

Shift Rates
30% shift premium shall be paid for wages and fringe benefits for 4:00 pm and midnight shifts Monday to Friday. 50% shift premium shall be paid for wages and fringe benefits for 4:00 pm and midnight shift work performed on weekends. For shift work on holidays, double time wages and fringe benefits shall be paid.

(Plumbers Local #1)

PLUMBER: PUMP & TANK
Oil Trades (Installation and Maintenance)

Plumber - Pump & Tank

Effective Period: 7/1/2016 - 6/30/2017
Wage Rate per Hour: $63.52
Supplemental Benefit Rate per Hour: $22.91

Overtime
Time and one half the regular rate after an 8 hour day.
Time and one half the regular rate for Saturday.
Time and one half the regular rate for Sunday.

Overtime Holidays
Time and one half the regular rate for work on the following holiday(s).
New Year's Day
President's Day
Memorial Day
Independence Day
Labor Day
Columbus Day
Veteran's Day
Thanksgiving Day
Day after Thanksgiving
Christmas Day

Paid Holidays
None

Shift Rates
All work outside the regular workday (8:00 A.M. to 3:30 P.M.) is to be paid at time and one half the regular hourly rate

(Plumbers Local #1)

POINTER, WATERPROOFER, CAULKER, SANDBLASTER, STEAMBLASTER
(Exterior Building Renovation)

Journeyperson

Effective Period: 7/1/2016 - 6/30/2017
Wage Rate per Hour: $50.04
Supplemental Benefit Rate per Hour: $26.15

Overtime
Time and one half the regular rate after an 8 hour day.
Time and one half the regular rate for Saturday.
Time and one half the regular rate for Sunday.
Saturday may be used as a make-up day at straight time when a day is lost during that week to inclement weather.

Overtime Holidays
Time and one half the regular rate for work on the following holiday(s).
New Year's Day
Martin Luther King Jr. Day
President's Day
Memorial Day
Independence Day
Labor Day
Thanksgiving Day
Christmas Day

Paid Holidays
None

Shift Rates
All work outside the regular work day (an eight hour workday between the hours of 6:00 A.M. and 4:30 P.M.) is to be paid at time and one half the regular rate.

(Bricklayer District Council)

ROOFER

Roofer

Effective Period: 7/1/2016 - 6/30/2017
Wage Rate per Hour: $40.70
Supplemental Benefit Rate per Hour: $30.17

Overtime
Time and one half the regular rate after an 8 hour day.
Time and one half the regular rate for Saturday.
Time and one half the regular rate for Sunday.

Overtime Holidays

Time and one half the regular rate for work on the following holiday(s).
New Year's Day
President's Day
Memorial Day
Independence Day
Labor Day
Presidential Election Day
Thanksgiving Day
Christmas Day

Paid Holidays
None

Shift Rates
Second shift - Regular hourly rate plus a 10% differential. Third shift - Regular hourly rate plus a 15% differential.

(Local #8)

SHEET METAL WORKER

Sheet Metal Worker

Effective Period: 7/1/2016 - 6/30/2017
Wage Rate per Hour: $47.70
Supplemental Benefit Rate per Hour: $46.45
Supplemental Note: Supplemental benefit contributions are to be made at the applicable overtime rates.

Sheet Metal Worker - Fan Maintenance

(The temporary operation of fans or blowers in new or existing buildings for heating and/or ventilation, and/or air conditioning prior to the completion of the project.)

Effective Period: 7/1/2016 - 6/30/2017
Wage Rate per Hour: $38.16
Supplemental Benefit Rate per Hour: $46.45

Sheet Metal Worker - Duct Cleaner

Effective Period: 7/1/2016 - 6/30/2017
Wage Rate per Hour: $12.90
Supplemental Benefit Rate per Hour: $8.07

Overtime
Time and one half the regular rate after an 8 hour day.
Time and one half the regular rate for Saturday.
Double time the regular rate for Sunday.

Overtime Holidays

Double time the regular rate for work on the following holiday(s).
New Year's Day
Martin Luther King Jr. Day
President's Day
Memorial Day
Independence Day
Labor Day
Columbus Day
Veteran's Day
Thanksgiving Day
Day after Thanksgiving
Christmas Day

Paid Holidays

None

Shift Rates

Work that can only be performed outside regular working hours (eight hours of work between 7:30 A.M. and 3:30 P.M.) - First shift (work between 3:30 P.M. and 11:30 P.M.) - 10% differential above the established hourly rate. Second shift (work between 11:30 P.M. and 7:30 A.M.) - 15% differential above the established hourly rate.

For Fan Maintenance: On all full shifts of fan maintenance work the straight time hourly rate of pay will be paid for each shift, including nights, Saturdays, Sundays, and holidays.

(Local #28)

SHEET METAL WORKER - SPECIALTY
(Decking & Siding)

Sheet Metal Specialty Worker

The first worker to perform this work must be paid at the rate of the Sheet Metal Worker. The second and third workers shall be paid the Specialty Worker Rate. The ratio of One Sheet Metal Worker, then Two Specialty Workers shall be utilized thereafter.

Effective Period: 7/1/2016 - 6/30/2017
Wage Rate per Hour: $43.25
Supplemental Benefit Rate per Hour: $24.41
Supplemental Note: Supplemental benefit contributions are to be made at the applicable overtime rates.

Overtime

Time and one half the regular rate after an 8 hour day.
Time and one half the regular rate for Saturday.
Double time the regular rate for Sunday.

Overtime Holidays

Double time the regular rate for work on the following holiday(s).
New Year's Day
Martin Luther King Jr. Day
President's Day
Memorial Day
Independence Day
Labor Day
Columbus Day
Veteran's Day
Thanksgiving Day
Christmas Day

Paid Holidays

None

(Local #28)

SHIPYARD WORKER

Shipyard Mechanic - First Class

Effective Period: 7/1/2016 - 6/30/2017
Wage Rate per Hour: $28.33
Supplemental Benefit Rate per Hour: $3.04

Shipyard Mechanic - Second Class

Effective Period: 7/1/2016 - 6/30/2017
Wage Rate per Hour: $22.18
Supplemental Benefit Rate per Hour: $2.80

Shipyard Laborer - First Class

Effective Period: 7/1/2016 - 6/30/2017
Wage Rate per Hour: $20.45
Supplemental Benefit Rate per Hour: $2.74

Shipyard Laborer - Second Class

Effective Period: 7/1/2016 - 6/30/2017
Wage Rate per Hour: $14.36
Supplemental Benefit Rate per Hour: $2.50

Shipyard Dockhand - First Class

Effective Period: 7/1/2016 - 6/30/2017
Wage Rate per Hour: $22.70
Supplemental Benefit Rate per Hour: $2.82

Shipyard Dockhand - Second Class

Effective Period: 7/1/2016 - 6/30/2017
Wage Rate per Hour: $16.01
Supplemental Benefit Rate per Hour: $2.57

Overtime Description
Work performed on holiday is paid double time the regular hourly wage rate plus holiday pay.

Overtime
Time and one half the regular rate after an 8 hour day.
Time and one half the regular rate for Saturday.
Double time the regular rate for Sunday.
Time and one half the regular hourly rate after 40 hours in any work week.

Paid Holidays
New Year's Day
Martin Luther King Jr. Day
President's Day
Good Friday
Memorial Day
Independence Day
Labor Day
Thanksgiving Day
Day after Thanksgiving
Christmas Day

Based on Survey Data

SIGN ERECTOR
(Sheet Metal, Plastic, Electric, and Neon)

Sign Erector

Effective Period: 7/1/2016 - 6/30/2017
Wage Rate per Hour: $46.85
Supplemental Benefit Rate per Hour: $48.57

Overtime

Time and one half the regular rate after a 7 hour day.
Time and one half the regular rate for Saturday.
Time and one half the regular rate for Sunday.
Time and one half the regular rate for work on the following holiday(s).

Paid Holidays

New Year's Day
Washington's Birthday
Memorial Day
Independence Day
Labor Day
Columbus Day
Election Day
Thanksgiving Day
Day after Thanksgiving
Christmas Day

Shift Rates

Time and one half the regular hourly rate is to be paid for all hours worked outside the regular workday either (7:00 A.M. through 2:30 P.M.) or (8:00 A.M. through 3:30 P.M.)

(Local #137)

STEAMFITTER

Steamfitter I

Effective Period: 7/1/2016 - 6/30/2017
Wage Rate per Hour: $55.50
Supplemental Benefit Rate per Hour: $54.29
Supplemental Note: Overtime supplemental benefit rate: $107.84

Steamfitter -Temporary Services

The steamfitters shall not do any other work and shall not be permitted to work more than one shift in a twenty-four hour day. When steamfitters are present during the regular working day, no temporary services steamfitter will be required

Effective Period: 7/1/2016 - 6/30/2017
Wage Rate per Hour: $42.18
Supplemental Benefit Rate per Hour: $44.08

Overtime

Double time the regular rate after a 7 hour day.
Double time the regular time rate for Saturday.

Double time the regular rate for Sunday.

Overtime Holidays

Double time the regular rate for work on the following holiday(s).
New Year's Day
President's Day
Memorial Day
Independence Day
Labor Day
Columbus Day
Veteran's Day
Thanksgiving Day
Day after Thanksgiving
Christmas Day

Paid Holidays

None

Shift Rates

Work performed between 3:30 P.M. and 7:00 A.M. and on Saturdays, Sundays and Holidays shall be at double time the regular hourly rate and paid at the overtime supplemental benefit rate above.

Steamfitter II

For heating, ventilation, air conditioning and mechanical public works contracts with a dollar value not to exceed $15,000,000 and for fire protection/sprinkler public works contracts not to exceed $1,500,000.

Effective Period: 7/1/2016 - 6/30/2017
Wage Rate per Hour: $55.50
Supplemental Benefit Rate per Hour: $54.29
Supplemental Note: Overtime supplemental benefit rate: $107.84

Steamfitter -Temporary Services

The steamfitters shall not do any other work and shall not be permitted to work more than one shift in a twenty-four hour day. When steamfitters are present during the regular working day, no temporary services steamfitter will be required.

Effective Period: 7/1/2016 - 6/30/2017
Wage Rate per Hour: $42.18
Supplemental Benefit Rate per Hour: $44.08

Overtime

Double time the regular rate after an 8 hour day.
Double time the regular time rate for Saturday.
Double time the regular rate for Sunday.

Overtime Holidays

Double time the regular rate for work on the following holiday(s).
New Year's Day
President's Day
Memorial Day
Independence Day
Labor Day
Columbus Day
Veteran's Day
Thanksgiving Day
Day after Thanksgiving
Christmas Day

Paid Holidays

None

Shift Rates

May be performed outside of the regular workday except Saturday, Sunday and Holidays. A shift shall consist of eight working hours. All work performed in excess of eight hours shall be paid at double time. No shift shall commence after 7:00 P.M. on Friday or 7:00 P.M. the day before holidays. All work performed after 12:01 A.M. Saturday or 12:01 A.M. the day before a Holiday will be paid at double time. When shift work is performed the wage rate for regular time worked is a thirty percent premium together with fringe benefits.

On Transit Authority projects, where work is performed in the vicinity of tracks all shift work on weekends and holidays may be performed at the regular shift rates.

Local #638

STEAMFITTER - REFRIGERATION AND AIR CONDITIONER
(Maintenance and Installation Service Person)

Refrigeration and Air Conditioner Mechanic

Effective Period: 7/1/2016 - 6/30/2017
Wage Rate per Hour: $39.50
Supplemental Benefit Rate per Hour: $15.06

Refrigeration and Air Conditioner Service Person V

Effective Period: 7/1/2016 - 6/30/2017
Wage Rate per Hour: $32.46
Supplemental Benefit Rate per Hour: $13.53

Refrigeration and Air Conditioner Service Person IV

Effective Period: 7/1/2016 - 6/30/2017

Wage Rate per Hour: $26.89
Supplemental Benefit Rate per Hour: $12.26

Refrigeration and Air Conditioner Service Person III

Filter changing and maintenance thereof, oil and greasing, tower and coil cleaning, scraping and painting, general housekeeping, taking of water samples.

Effective Period: 7/1/2016 - 6/30/2017
Wage Rate per Hour: $23.08
Supplemental Benefit Rate per Hour: $11.31

Refrigeration and Air Conditioner Service Person II

Filter changing and maintenance thereof, oil and greasing, tower and coil cleaning, scraping and painting, general housekeeping, taking of water samples.

Effective Period: 7/1/2016 - 6/30/2017
Wage Rate per Hour: $19.14
Supplemental Benefit Rate per Hour: $10.43

Refrigeration and Air Conditioner Service Person I

Filter changing and maintenance thereof, oil and greasing, tower and coil cleaning, scraping and painting, general housekeeping, taking of water samples.

Effective Period: 7/1/2016 - 6/30/2017
Wage Rate per Hour: $14.00
Supplemental Benefit Rate per Hour: $9.46

Overtime

Time and one half the regular rate after an 8 hour day.
Time and one half the regular rate for Saturday.
Double time the regular rate for Sunday.

Overtime Holidays

Double time the regular rate for work on the following holiday(s).
New Year's Day
Independence Day
Labor Day
Veteran's Day
Thanksgiving Day
Christmas Day

Double time and one half the regular rate for work on the following holiday(s).
Martin Luther King Jr. Day
President's Day
Memorial Day
Columbus Day

Paid Holidays

New Year's Day
Martin Luther King Jr. Day
President's Day
Memorial Day
Independence Day
Labor Day
Columbus Day
Veteran's Day
Thanksgiving Day
Christmas Day

(Local #638B)

STONE MASON - SETTER

Stone Mason - Setters

Effective Period: 7/1/2016 - 6/30/2017
Wage Rate per Hour: $51.08
Supplemental Benefit Rate per Hour: $38.10

Overtime
Time and one half the regular rate after a 7 hour day.
Time and one half the regular rate for Saturday.
Double time the regular rate for Sunday.

Overtime Holidays
Double time the regular rate for work on the following holiday(s).
New Year's Day
Washington's Birthday
Good Friday
Memorial Day
Independence Day
Labor Day
Thanksgiving Day
Christmas Day

Paid Holidays
1/2 day on Christmas Eve if work is performed in the A.M.

Shift Rates
For all work outside the regular workday (8:00 A.M. to 3:30 P.M. Monday through Friday), the pay shall be straight time plus a ten percent (10%) differential.

(Bricklayers District Council)

TAPER

Drywall Taper

Effective Period: 7/1/2016 - 12/27/2016
Wage Rate per Hour: $47.32
Supplemental Benefit Rate per Hour: $22.68

Effective Period: 12/28/2016 - 6/30/2017
Wage Rate per Hour: $47.82
Supplemental Benefit Rate per Hour: $22.68

Overtime
Time and one half the regular rate after a 7 hour day.
Time and one half the regular rate for Saturday.
Time and one half the regular rate for Sunday.

Overtime Holidays
Time and one half the regular rate for work on the following holiday(s).
New Year's Day
Martin Luther King Jr. Day
President's Day
Good Friday
Memorial Day
Independence Day
Labor Day
Columbus Day
Thanksgiving Day
Christmas Day

Paid Holidays
Any worker who reports to work on Christmas Eve or New Year's Eve pursuant to his employer's instruction shall be entitled to three (3) hours afternoon pay without working.

Shift Rates
Time and one half the regular rate outside the regular work hours (8:00 A.M. through 3:30 P.M.)

(Local #1974)

TELECOMMUNICATION WORKER
(Voice Installation Only)

Telecommunication Worker

Effective Period: 7/1/2016 - 6/30/2017
Wage Rate per Hour: $40.35
Supplemental Benefit Rate per Hour: $13.19
Supplemental Note: The above rate applies for Manhattan, Bronx, Brooklyn, Queens. $12.64 for Staten Island only.

Overtime
Time and one half the regular rate after a 7 hour day.
Time and one half the regular rate for Saturday.
Time and one half the regular rate for Sunday.

Overtime Holidays
Time and one half the regular rate for work on the following holiday(s).
New Year's Day
Lincoln's Birthday
Washington's Birthday
Memorial Day
Independence Day
Labor Day
Columbus Day
Election Day
Veteran's Day
Thanksgiving Day
Christmas Day

Paid Holidays
New Year's Day
Lincoln's Birthday
Washington's Birthday
Memorial Day
Independence Day
Labor Day
Columbus Day
Election Day
Veteran's Day
Thanksgiving Day
Christmas Day
Employees have the option of observing either Martin Luther King's Birthday or the day after Thanksgiving instead of Lincoln's Birthday

Shift Rates
For any workday that starts before 8A.M. or ends after 6P.M. there is a 10% differential for the applicable worker's hourly rate.

Vacation
After 6 months.....one week.
After 12 months but less than 7 years.....two weeks.
After 7 or more but less than 15 years.....three weeks.
After 15 years or more but less than 25 years.....four weeks.

(C.W.A.)

TILE FINISHER

Tile Finisher

Effective Period: 7/1/2016 - 6/30/2017
Wage Rate per Hour: $40.69
Supplemental Benefit Rate per Hour: $30.58

Overtime
Time and one half the regular rate after a 7 hour day.
Time and one half the regular rate for Saturday.
Double time the regular rate for Sunday.

Overtime Holidays
Double time the regular rate for work on the following holiday(s).
New Year's Day
President's Day
Good Friday
Memorial Day
Independence Day
Labor Day
Columbus Day
Veteran's Day
Thanksgiving Day
Day after Thanksgiving
Christmas Day

Paid Holidays
None

Shift Rates
Off shift work day (work performed outside the regular 8:00 A.M. to 3:30 P.M. workday): shift differential of one and one quarter (1¼) times the regular straight time rate of pay for the seven hours of actual off-shift work.

(Local #7)

TILE LAYER - SETTER

Tile Layer - Setter

Effective Period: 7/1/2016 - 6/30/2017
Wage Rate per Hour: $52.68
Supplemental Benefit Rate per Hour: $34.48

Overtime
Time and one half the regular rate after a 7 hour day.
Time and one half the regular rate for Saturday.
Double time the regular rate for Sunday.

Overtime Holidays
Double time the regular rate for work on the following holiday(s).
New Year's Day
President's Day
Good Friday
Memorial Day
Independence Day
Labor Day
Columbus Day
Veteran's Day
Thanksgiving Day
Day after Thanksgiving
Christmas Day

Shift Rates
Off shift work day (work performed outside the regular 8:00 A.M. to 3:30 P.M. workday): shift differential of one and one quarter (1¼) times the regular straight time rate of pay for the seven hours of actual off-shift work.

(Local #7)

TIMBERPERSON

Timberperson

Effective Period: 7/1/2016 - 6/30/2017
Wage Rate per Hour: $46.99
Supplemental Benefit Rate per Hour: $48.26

Overtime
Time and one half the regular rate after an 8 hour day.
Time and one half the regular rate for Saturday.
Double time the regular rate for Sunday.
Saturday may be used as a make-up day at straight time when a day is lost during that week to inclement weather.
Time and one half the regular hourly rate after 40 hours in any work week.

Overtime Holidays

Double time the regular rate for work on the following holiday(s).
New Year's Day
President's Day
Memorial Day
Independence Day
Labor Day
Columbus Day
Presidential Election Day
Thanksgiving Day
Christmas Day

Paid Holidays

None

Shift Rates

Off shift work commencing between 5:00 P.M. and 11:00 P.M. shall work eight and one half hours allowing for one half hour for lunch. The wage rate shall be 113% of the straight time hourly wage rate.

(Local #1536)

TUNNEL WORKER

Blasters, Mucking Machine Operators (Compressed Air Rates)

Effective Period: 7/1/2016 - 6/30/2017
Wage Rate per Hour: $60.97
Supplemental Benefit Rate per Hour: $50.72

Tunnel Workers (Compressed Air Rates)

Effective Period: 7/1/2016 - 6/30/2017
Wage Rate per Hour: $58.86
Supplemental Benefit Rate per Hour: $49.03

Top Nipper (Compressed Air Rates)

Effective Period: 7/1/2016 - 6/30/2017
Wage Rate per Hour: $57.78
Supplemental Benefit Rate per Hour: $48.16

Outside Lock Tender, Outside Gauge Tender,Muck Lock Tender (Compressed Air Rates)

Effective Period: 7/1/2016 - 6/30/2017

Wage Rate per Hour: $56.74
Supplemental Benefit Rate per Hour: $47.25

Bottom Bell & Top Bell Signal Person: Shaft Person (Compressed Air Rates)

Effective Period: 7/1/2016 - 6/30/2017
Wage Rate per Hour: $56.74
Supplemental Benefit Rate per Hour: $47.25

Changehouse Attendant: Powder Watchperson (Compressed Air Rates)

Effective Period: 7/1/2016 - 6/30/2017
Wage Rate per Hour: $49.69
Supplemental Benefit Rate per Hour: $44.69

Blasters (Free Air Rates)

Effective Period: 7/1/2016 - 6/30/2017
Wage Rate per Hour: $58.19
Supplemental Benefit Rate per Hour: $48.68

Tunnel Workers (Free Air Rates)

Effective Period: 7/1/2016 - 6/30/2017
Wage Rate per Hour: $55.69
Supplemental Benefit Rate per Hour: $46.61

All Others (Free Air Rates)

Effective Period: 7/1/2016 - 6/30/2017
Wage Rate per Hour: $51.45
Supplemental Benefit Rate per Hour: $43.13

Microtunneling (Free Air Rates)

Effective Period: 7/1/2016 - 6/30/2017
Wage Rate per Hour: $44.55
Supplemental Benefit Rate per Hour: $37.29

Overtime Description

For Repair-Maintenance Work on Existing Equipment and Facilities - Time and one half the regular rate after a 7 hour day, or for Saturday, or for Sunday. Double time the regular rate for work on a holiday.
For Small-Bore Micro Tunneling Machines - Time and one-half the regular rate shall be paid for all overtime.

Overtime

Double time the regular rate after an 8 hour day.
Double time the regular time rate for Saturday.
Double time the regular rate for Sunday.
Double time the regular rate for work on the following holiday(s).

Paid Holidays

New Year's Day
Lincoln's Birthday
President's Day
Memorial Day
Independence Day
Labor Day
Columbus Day
Election Day
Veteran's Day
Thanksgiving Day
Christmas Day

(Local #147)

WELDER

TO BE PAID AT THE RATE OF THE JOURNEYPERSON IN THE TRADE PERFORMING THE WORK.

(NO TEXT THIS PAGE)

OFFICE OF THE COMPTROLLER

CITY OF NEW YORK

220 APPRENTICESHIP PREVAILING WAGE SCHEDULE

APPENDIX

Pursuant to Labor Law §220 (3-e), only apprentices who are individually registered in a bona fide program to which the employer contractor is a participant and registered with the New York State Department of Labor, may be employed on a public work project.

Any employee listed on a payroll at an apprentice wage rate, who is not registered as above, shall be paid the journey person wage rate for the classification of work he actually performed.

Apprentice ratios are established to ensure the proper safety, training and supervision of apprentices. A ratio establishes the number of journey workers required for each apprentice in a program and on a job site. Ratios are interpreted as follows: in the case of a 1:1, 1:4 ratio, there must be one journey worker for the first apprentice, and four additional journey workers for each subsequent apprentice.

TABLE OF CONTENTS

CLASSIFICATION	PAGE
ASBESTOS HANDLER	3
BOILERMAKER	3
BRICKLAYER	4
CARPENTER	5
CEMENT MASON	6
CEMENT AND CONCRETE WORKER	7
DERRICKPERSON & RIGGER (STONE)	8
DOCKBUILDER/PILE DRIVER	8
ELECTRICIAN	9
ELEVATOR CONSTRUCTOR	12
ELEVATOR REPAIR & MAINTENANCE	13
ENGINEER	14
ENGINEER - OPERATING	14
FLOOR COVERER	15
GLAZIER	16
HEAT & FROST INSULATOR	16
HOUSE WRECKER	17
IRON WORKER - ORNAMENTAL	18
IRON WORKER - STRUCTURAL	18
LABORER (FOUNDATION, CONCRETE, EXCAVATING, STREET PIPE LAYER & COMMON)	19
MARBLE MECHANICS	20
MASON TENDER	21
METALLIC LATHER	22
MILLWRIGHT	22
PAVER AND ROADBUILDER	23
PAINTER	24
PAINTER - METAL POLISHER	25
PAINTER - STRUCTURAL STEEL	25
PLASTERER	26
PLASTERER - TENDER	27
PLUMBER	27
POINTER, WATERPROOFER, CAULKER, SANDBLASTER, STEAMBLASTER	29
ROOFER	29
SHEET METAL WORKER	30
SIGN ERECTOR	31
STEAMFITTER	32
STONE MASON - SETTER	33
TAPER	34
TILE LAYER - SETTER	35
TIMBERPERSON	35

ASBESTOS HANDLER
(Ratio of Apprentice Journeyperson: 1 to 1, 1 to 3)

Asbestos Handler (First 1000 Hours)

Effective Period: 7/1/2016 - 6/30/2017
Wage Rate Per Hour: 78% of Journeyperson's rate
Supplemental Benefit Rate Per Hour: $16.45

Asbestos Handler (Second 1000 Hours)

Effective Period: 7/1/2016 - 6/30/2017
Wage Rate Per Hour: 80% of Journeyperson's rate
Supplemental Benefit Rate Per Hour: $16.45

Asbestos Handler (Third 1000 Hours)

Effective Period: 7/1/2016 - 6/30/2017
Wage Rate Per Hour: 83% of Journeyperson's rate
Supplemental Benefit Rate Per Hour: $16.45

Asbestos Handler (Fourth 1000 Hours)

Effective Period: 7/1/2016 - 6/30/2017
Wage Rate Per Hour: 89% of Journeyperson's rate
Supplemental Benefit Rate Per Hour: $16.45

(Local #78)

BOILERMAKER
(Ratio of Apprentice to Journeyperson: 1 to 1, 1 to 3)

Boilermaker (First Year)

Effective Period: 7/1/2016 - 6/30/2017
Wage Rate Per Hour: 65% of Journeyperson's rate
Supplemental Benefit Rate Per Hour: $30.43
Effective 1/1/2017 - Supplemental Benefit Rate Per Hour: $30.84

Boilermaker (Second Year: 1st Six Months)

Effective Period: 7/1/2016 - 6/30/2017

Wage Rate Per Hour: 70% of Journeyperson's rate
Supplemental Benefit Rate Per Hour: $32.13
Effective 1/1/2017 - Supplemental Benefit Rate Per Hour: $32.57

Boilermaker (Second Year: 2nd Six Months)

Effective Period: 7/1/2016 - 6/30/2017
Wage Rate Per Hour: 75% of Journeyperson's rate
Supplemental Benefit Rate Per Hour: $33.82
Effective 1/1/2017 - Supplemental Benefit Rate Per Hour: $34.29

Boilermaker (Third Year: 1st Six Months)

Effective Period: 7/1/2016 - 6/30/2017
Wage Rate Per Hour: 80% of Journeyperson's rate
Supplemental Benefit Rate Per Hour: $35.53
Effective 1/1/2017 - Supplemental Benefit Rate Per Hour: $36.03

Boilermaker (Third Year: 2nd Six Months)

Effective Period: 7/1/2016 - 6/30/2017
Wage Rate Per Hour: 85% of Journeyperson's rate
Supplemental Benefit Rate Per Hour: $37.23
Effective 1/1/2017 - Supplemental Benefit Rate Per Hour: $37.76

Boilermaker (Fourth Year: 1st Six Months)

Effective Period: 7/1/2016 - 6/30/2017
Wage Rate Per Hour: 90% of Journeyperson's rate
Supplemental Benefit Rate Per Hour: $38.93
Effective 1/1/2017 - Supplemental Benefit Rate Per Hour: $39.51

Boilermaker (Fourth Year: 2nd Six Months)

Effective Period: 7/1/2016 - 6/30/2017
Wage Rate Per Hour: 95% of Journeyperson's rate
Supplemental Benefit Rate Per Hour: $40.63
Effective 1/1/2017 - Supplemental Benefit Rate Per Hour: $41.22

(Local #5)

BRICKLAYER
(Ratio of Apprentice to Journeyperson: 1 to 1, 1 to 4)

Bricklayer (First 750 Hours)

Effective Period: 7/1/2016 - 6/30/2017
Wage Rate Per Hour: 50% of Journeyperson's rate
Supplemental Benefit Rate Per Hour: $18.35

Bricklayer (Second 750 Hours)

Effective Period: 7/1/2016 - 6/30/2017
Wage Rate Per Hour: 60% of Journeyperson's rate
Supplemental Benefit Rate Per Hour: $18.35

Bricklayer (Third 750 Hours)

Effective Period: 7/1/2016 - 6/30/2017
Wage Rate Per Hour: 70% of Journeyperson's rate
Supplemental Benefit Rate Per Hour: $18.35

Bricklayer (Fourth 750 Hours)

Effective Period: 7/1/2016 - 6/30/2017
Wage Rate Per Hour: 80% of Journeyperson's rate
Supplemental Benefit Rate Per Hour: $18.35

Bricklayer (Fifth 750 Hours)

Effective Period: 7/1/2016 - 6/30/2017
Wage Rate Per Hour: 90% of Journeyperson's rate
Supplemental Benefit Rate Per Hour: $18.35

Bricklayer (Sixth 750 Hours)

Effective Period: 7/1/2016 - 6/30/2017
Wage Rate Per Hour: 95% of Journeyperson's rate
Supplemental Benefit Rate Per Hour: $18.35

(Bricklayer District Council)

CARPENTER
(Ratio of Apprentice to Journeyperson: 1 to 1, 1 to 4)

Carpenter (First Year)

Effective Period: 7/1/2016 - 6/30/2017
Wage Rate Per Hour: 40% of Journeyperson's rate
Supplemental Benefit Rate Per Hour For Building Apprentice: $31.34

Supplemental Benefit Rate Per Hour For Heavy Apprentice: $32.52

Carpenter (Second Year)

Effective Period: 7/1/2016 - 6/30/2017
Wage Rate Per Hour: 50% of Journeyperson's rate
Supplemental Benefit Rate Per Hour For Building Apprentice: $31.34
Supplemental Benefit Rate Per Hour For Heavy Apprentice: $32.52

Carpenter (Third Year)

Effective Period: 7/1/2016 - 6/30/2017
Wage Rate Per Hour: 65% of Journeyperson's rate
Supplemental Benefit Rate Per Hour For Building Apprentice: $31.34
Supplemental Benefit Rate Per Hour For Heavy Apprentice: $32.52

Carpenter (Fourth Year)

Effective Period: 7/1/2016 - 6/30/2017
Wage Rate Per Hour: 80% of Journeyperson's rate
Supplemental Benefit Rate Per Hour For Building Apprentice: $31.34
Supplemental Benefit Rate Per Hour For Heavy Apprentice: $32.52

(Carpenters District Council)

CEMENT MASON
(Ratio of Apprentice to Journeyperson: 1 to 1, 1 to 4)

Cement Mason (First Year)

Effective Period: 7/1/2016 - 6/30/2017
Wage and Supplemental Rate Per Hour: 50% of Journeyperson's Rate

Cement Mason (Second Year)

Effective Period: 7/1/2016 - 6/30/2017
Wage and Supplemental Rate Per Hour: 60% of Journeyperson's Rate

Cement Mason (Third Year)

Effective Period: 7/1/2016 - 6/30/2017
Wage and Supplemental Rate Per Hour: 70% of Journeyperson's Rate

(Local #780)

CEMENT AND CONCRETE WORKER
(Ratio of Apprentice to Journeyperson: 1 to 1, 1 to 3)

Cement & Concrete Worker (First 1333 hours)

Effective Period: 7/1/2016 - 6/30/2017
Wage Rate Per Hour: 50% of Journeyperson's rate
Supplemental Benefit Rate Per Hour: $16.25

Cement & Concrete Worker (Second 1333 hours)

Effective Period: 7/1/2016 - 6/30/2017
Wage Rate Per Hour: 65% of Journeyperson's rate
Supplemental Benefit Rate Per Hour: $21.08

Cement & Concrete Worker (Last 1334 hours)

Effective Period: 7/1/2016 - 6/30/2017
Wage Rate Per Hour: 80% of Journeyperson's rate
Supplemental Benefit Rate Per Hour: $21.90

Cement & Concrete Worker (Hired after 2/6/2016 - First 1334 hours)

Effective Period: 7/1/2016 - 6/30/2017
Wage Rate Per Hour: $17.00
Supplemental Benefit Rate Per Hour: $10.75

Cement & Concrete Worker (Hired after 2/6/2016 - Second 1334 hours)

Effective Period: 7/1/2016 - 6/30/2017
Wage Rate Per Hour: $22.10
Supplemental Benefit Rate Per Hour: $15.13

Cement & Concrete Worker (Hired after 2/6/2016 - Last 1334 hours)

Effective Period: 7/1/2016 - 6/30/2017
Wage Rate Per Hour: $27.20
Supplemental Benefit Rate Per Hour: $15.63

(Cement Concrete Workers District Council)

DERRICKPERSON & RIGGER (STONE)
(Ratio of Apprentice to Journeyperson: 1 to 1, 1 to 4)

Derrickperson & Rigger (stone) - First Year

Effective Period: 7/1/2016 - 6/30/2017
Wage Rate Per Hour: 50% of Journeyperson's rate
Supplemental Benefit Rate Per Hour: 50% of Journeyperson's rate

Derrickperson & Rigger (stone) - Second Year: 1st Six Months

Effective Period: 7/1/2016 - 6/30/2017
Wage Rate Per Hour: 70% of Journeyperson's rate
Supplemental Benefit Rate Per Hour: 75% of Journeyperson's rate

Derrickperson & Rigger (stone) - Second Year: 2nd Six Months

Effective Period: 7/1/2016 - 6/30/2017
Wage Rate Per Hour: 80% of Journeyperson's rate
Supplemental Benefit Rate Per Hour: 75% of Journeyperson's rate

Derrickperson & Rigger (stone) - Third Year

Effective Period: 7/1/2016 - 6/30/2017
Wage Rate Per Hour: 90% of Journeyperson's rate
Supplemental Benefit Rate Per Hour: 75% of Journeyperson's rate

(Local #197)

DOCKBUILDER/PILE DRIVER
(Ratio of Apprentice to Journeyperson: 1 to 1, 1 to 6)

Dockbuilder/Pile Driver (First Year)

Effective Period: 7/1/2016 - 6/30/2017
Wage Rate Per Hour: 40% of Journeyperson's rate
Supplemental Benefit Rate Per Hour: $32.52

Dockbuilder/Pile Driver (Second Year)

Effective Period: 7/1/2016 - 6/30/2017
Wage Rate Per Hour: 50% of Journeyperson's rate

Supplemental Benefit Rate Per Hour: $32.52

Dockbuilder/Pile Driver (Third Year)

Effective Period: 7/1/2016 - 6/30/2017
Wage Rate Per Hour: 65% of Journeyperson's rate
Supplemental Benefit Rate Per Hour: $32.52

Dockbuilder/Pile Driver (Fourth Year)

Effective Period: 7/1/2016 - 6/30/2017
Wage Rate Per Hour: 80% of Journeyperson's rate
Supplemental Benefit Rate Per Hour: $32.52

(Carpenters District Council)

ELECTRICIAN
(Ratio of Apprentice to Journeyperson: 1 to 1, 1 to 3)

Electrician (First Term: 0-6 Months)

Effective Period: 7/1/2016 - 5/10/2017
Wage Rate per Hour: $13.50
Supplemental Benefit Rate per Hour: $12.12
Overtime Supplemental Rate Per Hour: $13.01

Effective Period: 5/11/2017 - 6/30/2017
Wage Rate per Hour: $14.00
Supplemental Benefit Rate per Hour: $12.37
Overtime Supplemental Rate Per Hour: $13.29

Electrician (First Term: 7-12 Months)

Effective Period: 7/1/2016 - 5/10/2017
Wage Rate per Hour: $14.50
Supplemental Benefit Rate per Hour: $12.63
Overtime Supplemental Rate Per Hour: $13.58

Effective Period: 5/11/2017 - 6/30/2017
Wage Rate per Hour: $15.00
Supplemental Benefit Rate per Hour: $12.88
Overtime Supplemental Rate Per Hour: $13.87

Electrician (Second Term: 0-6 Months)

Effective Period: 7/1/2016 - 5/10/2017
Wage Rate per Hour: $15.50
Supplemental Benefit Rate per Hour: $13.14
Overtime Supplemental Rate Per Hour: $14.16

Effective Period: 5/11/2017 - 6/30/2017
Wage Rate per Hour: $16.00
Supplemental Benefit Rate per Hour: $13.39
Overtime Supplemental Rate Per Hour: $14.44

Electrician (Second Term: 7-12 Months)

Effective Period: 7/1/2016 - 5/10/2017
Wage Rate per Hour: $16.50
Supplemental Benefit Rate per Hour: $13.64
Overtime Supplemental Rate Per Hour: $14.73

Effective Period: 5/11/2017 - 6/30/2017
Wage Rate per Hour: $17.00
Supplemental Benefit Rate per Hour: $13.90
Overtime Supplemental Rate Per Hour: $15.02

Electrician (Third Term: 0-6 Months)

Effective Period: 7/1/2016 - 5/10/2017
Wage Rate per Hour: $17.50
Supplemental Benefit Rate per Hour: $14.15
Overtime Supplemental Rate Per Hour: $15.31

Effective Period: 5/11/2017 - 6/30/2017
Wage Rate per Hour: $18.00
Supplemental Benefit Rate per Hour: $14.41
Overtime Supplemental Rate Per Hour: $15.59

Electrician (Third Term: 7-12 Months)

Effective Period: 7/1/2016 - 5/10/2017
Wage Rate per Hour: $18.50
Supplemental Benefit Rate per Hour: $14.66
Overtime Supplemental Rate Per Hour: $15.88

Effective Period: 5/11/2017 - 6/30/2017
Wage Rate per Hour: $19.00
Supplemental Benefit Rate per Hour: $14.92
Overtime Supplemental Rate Per Hour: $16.17

Electrician (Fourth Term: 0-6 Months)

Effective Period: 7/1/2016 - 5/10/2017

Wage Rate per Hour: $19.50
Supplemental Benefit Rate per Hour: $15.17
Overtime Supplemental Rate Per Hour: $16.45

Effective Period: 5/11/2017 - 6/30/2017
Wage Rate per Hour: $20.00
Supplemental Benefit Rate per Hour: $15.43
Overtime Supplemental Rate Per Hour: $16.75

Electrician (Fourth Term: 7-12 Months)

Effective Period: 7/1/2016 - 5/10/2017
Wage Rate per Hour: $21.50
Supplemental Benefit Rate per Hour: $16.19
Overtime Supplemental Rate Per Hour: $17.60

Effective Period: 5/11/2017 - 6/30/2017
Wage Rate per Hour: $22.00
Supplemental Benefit Rate per Hour: $16.44
Overtime Supplemental Rate Per Hour: $17.89

Electrician (Fifth Term: 0-12 Months)

Effective Period: 7/1/2016 - 5/10/2017
Wage Rate per Hour: $23.50
Supplemental Benefit Rate per Hour: $19.54
Overtime Supplemental Rate Per Hour: $21.01

Effective Period: 5/11/2017 - 6/30/2017
Wage Rate per Hour: $24.00
Supplemental Benefit Rate per Hour: $19.80
Overtime Supplemental Rate Per Hour: $21.30

Electrician (Fifth Term: 13-18 Months)

Effective Period: 7/1/2016 - 5/10/2017
Wage Rate per Hour: $28.00
Supplemental Benefit Rate per Hour: $21.85
Overtime Supplemental Rate Per Hour: $23.60

Effective Period: 5/11/2017 - 6/30/2017
Wage Rate per Hour: $28.50
Supplemental Benefit Rate per Hour: $22.10
Overtime Supplemental Rate Per Hour: $23.89

Overtime Description

Overtime Wage paid at time and one half the regular rate

(Local #3)

ELEVATOR CONSTRUCTOR
(Ratio of Apprentice to Journeyperson: 1 to 1, 1 to 2)

Elevator (Constructor) - First Year

Effective Period: 7/1/2016 - 3/16/2017
Wage Rate Per Hour: 50% of Journeyperson's rate
Supplemental Rate Per Hour: $28.24

Effective Period: 3/17/2017 - 6/30/2017
Wage Rate Per Hour: 50% of Journeyperson's rate
Supplemental Rate Per Hour: $29.72

Elevator (Constructor) - Second Year

Effective Period: 7/1/2016 - 3/16/2017
Wage Rate Per Hour: 55% of Journeyperson's rate
Supplemental Rate Per Hour: $28.67

Effective Period: 3/17/2017 - 6/30/2017
Wage Rate Per Hour: 55% of Journeyperson's rate
Supplemental Rate Per Hour: $30.15

Elevator (Constructor) - Third Year

Effective Period: 7/1/2016 - 3/16/2017
Wage Rate Per Hour: 65% of Journeyperson's rate
Supplemental Rate Per Hour: $29.52

Effective Period: 3/17/2017 - 6/30/2017
Wage Rate Per Hour: 65% of Journeyperson's rate
Supplemental Rate Per Hour: $31.03

Elevator (Constructor) - Fourth Year

Effective Period: 7/1/2016 - 3/16/2017
Wage Rate Per Hour: 75% of Journeyperson's rate
Supplemental Rate Per Hour: $30.37

Effective Period: 3/17/2017 - 6/30/2017
Wage Rate Per Hour: 75% of Journeyperson's rate
Supplemental Rate Per Hour: $31.91

(Local #1)

ELEVATOR REPAIR & MAINTENANCE
(Ratio of Apprentice to Journeyperson: 1 to 1, 1 to 2)

Elevator Service/Modernization Mechanic (First Year)

Effective Period: 7/1/2016 - 3/16/2017
Wage Rate Per Hour: 50% of Journeyperson's rate
Supplemental Benefit Per Hour: $28.33

Effective Period: 3/17/2017 - 6/30/2017
Wage Rate Per Hour: 50% of Journeyperson's rate
Supplemental Benefit Per Hour: $29.80

Elevator Service/Modernization Mechanic (Second Year)

Effective Period: 7/1/2016 - 3/16/2017
Wage Rate Per Hour: 55% of Journeyperson's rate
Supplemental Benefit Per Hour: $28.74

Effective Period: 3/17/2017 - 6/30/2017
Wage Rate Per Hour: 55% of Journeyperson's rate
Supplemental Benefit Per Hour: $30.23

Elevator Service/Modernization Mechanic (Third Year)

Effective Period: 7/1/2016 - 3/16/2017
Wage Rate Per Hour: 65% of Journeyperson's rate
Supplemental Benefit Per Hour: $29.58

Effective Period: 3/17/2017 - 6/30/2017
Wage Rate Per Hour: 65% of Journeyperson's rate
Supplemental Benefit Per Hour: $31.09

Elevator Service/Modernization Mechanic (Fourth Year)

Effective Period: 7/1/2016 - 3/16/2017
Wage Rate Per Hour: 75% of Journeyperson's rate
Supplemental Benefit Per Hour: $30.42

Effective Period: 3/17/2017 - 6/30/2017
Wage Rate Per Hour: 75% of Journeyperson's rate
Supplemental Benefit Per Hour: $31.95

(Local #1)

ENGINEER
(Ratio of Apprentice to Journeyperson: 1 to 1, 1 to 5)

Engineer - First Year

Effective Period: 7/1/2016 - 6/30/2017
Wage Rate per Hour: $24.28
Supplemental Benefit Rate per Hour: $23.41

Engineer - Second Year

Effective Period: 7/1/2016 - 6/30/2017
Wage Rate per Hour: $30.35
Supplemental Benefit Rate per Hour: $23.41

Engineer - Third Year

Effective Period: 7/1/2016 - 6/30/2017
Wage Rate per Hour: $33.38
Supplemental Benefit Rate per Hour: $23.41

Engineer - Fourth Year

Effective Period: 7/1/2016 - 6/30/2017
Wage Rate per Hour: $36.41
Supplemental Benefit Rate per Hour: $23.41

(Local #15)

ENGINEER - OPERATING
(Ratio of Apprentice to Journeyperson: 1 to 1, 1 to 5)

Operating Engineer - First Year

Effective Period: 7/1/2016 - 6/30/2017
Wage Rate Per Hour 40% of Journeyperson's Rate
Supplemental Benefit Per Hour: $20.85

Operating Engineer - Second Year

Effective Period: 7/1/2016 - 6/30/2017
Wage Rate Per Hour: 50% of Journeyperson's Rate
Supplemental Benefit Per Hour: $20.85

Operating Engineer - Third Year

Effective Period: 7/1/2016 - 6/30/2017
Wage Rate Per Hour: 60% of Journeyperson's Rate
Supplemental Benefit Per Hour: $20.85

(Local #14)

FLOOR COVERER
(Ratio of Apprentice to Journeyperson: 1 to 1, 1 to 4)

Floor Coverer (First Year)

Effective Period: 7/1/2016 - 6/30/2017
Wage Rate Per Hour: 40% of Journeyperson's rate
Supplemental Rate Per Hour: $31.14

Floor Coverer (Second Year)

Effective Period: 7/1/2016 - 6/30/2017
Wage Rate Per Hour: 50% of Journeyperson's rate
Supplemental Rate Per Hour: $31.14

Floor Coverer (Third Year)

Effective Period: 7/1/2016 - 6/30/2017
Wage Rate Per Hour: 65% of Journeyperson's rate
Supplemental Rate Per Hour: $31.14

Floor Coverer (Fourth Year)

Effective Period: 7/1/2016 - 6/30/2017
Wage Rate Per Hour: 80% of Journeyperson's rate
Supplemental Rate Per Hour: $31.14

(Carpenters District Council)

GLAZIER
(Ratio of Apprentice to Journeyperson: 1 to 1, 1 to 3)

Glazier (First Year)

Effective Period: 7/1/2016 - 6/30/2017
Wage Rate Per Hour: 40% of Journeyperson's rate
Supplemental Rate Per Hour: $14.14

Glazier (Second Year)

Effective Period: 7/1/2016 - 6/30/2017
Wage Rate Per Hour: 50% of Journeyperson's rate
Supplemental Rate Per Hour: $23.77

Glazier (Third Year)

Effective Period: 7/1/2016 - 6/30/2017
Wage Rate Per Hour: 60% of Journeyperson's rate
Supplemental Rate Per Hour: $26.73

Glazier (Fourth Year)

Effective Period: 7/1/2016 - 6/30/2017
Wage Rate Per Hour: 80% of Journeyperson's rate
Supplemental Rate Per Hour: $32.14

(Local #1281)

HEAT & FROST INSULATOR
(Ratio of Apprentice to Journeyperson: 1 to 1, 1 to 4)

Heat & Frost Insulator (First Year)

Effective Period: 7/1/2016 - 6/30/2017
Wage and Supplemental Rate Per Hour: 40% of Journeyperson's rate

Heat & Frost Insulator (Second Year)

Effective Period: 7/1/2016 - 6/30/2017
Wage and Supplemental Rate Per Hour: 60% of Journeyperson's rate

Heat & Frost Insulator (Third Year)

Effective Period: 7/1/2016 - 6/30/2017
Wage and Supplemental Rate Per Hour: 70% of Journeyperson's rate

Heat & Frost Insulator (Fourth Year)

Effective Period: 7/1/2016 - 6/30/2017
Wage and Supplemental Rate Per Hour: 80% of Journeyperson's rate

(Local #12)

HOUSE WRECKER
(TOTAL DEMOLITION)
(Ratio of Apprentice to Journeyperson: 1 to 1, 1 to 3)

House Wrecker - First Year

Effective Period: 7/1/2016 - 6/30/2017
Wage Rate per Hour: $21.17
Supplemental Benefit Rate per Hour: $17.99

House Wrecker - Second Year

Effective Period: 7/1/2016 - 6/30/2017
Wage Rate per Hour: $22.32
Supplemental Benefit Rate per Hour: $17.99

House Wrecker - Third Year

Effective Period: 7/1/2016 - 6/30/2017
Wage Rate per Hour: $23.97
Supplemental Benefit Rate per Hour: $17.99

House Wrecker - Fourth Year

Effective Period: 7/1/2016 - 6/30/2017
Wage Rate per Hour: $26.53
Supplemental Benefit Rate per Hour: $17.99

(Mason Tenders District Council)

IRON WORKER - ORNAMENTAL
(Ratio of Apprentice to Journeyperson: 1 to 1, 1 to 4)

Iron Worker (Ornamental) - 1st Ten Months

Effective Period: 7/1/2016 - 6/30/2017
Wage Rate Per Hour: 50% of Journeyperson's rate
Supplemental Rate Per Hour: $37.90

Iron Worker (Ornamental) - 11 -16 Months

Effective Period: 7/1/2016 - 6/30/2017
Wage Rate Per Hour: 55% of Journeyperson's rate
Supplemental Rate Per Hour: $39.06

Iron Worker (Ornamental) - 17 - 22 Months

Effective Period: 7/1/2016 - 6/30/2017
Wage Rate Per Hour: 60% of Journeyperson's rate
Supplemental Rate Per Hour: $40.23

Iron Worker (Ornamental) - 23 - 28 Months

Effective Period: 7/1/2016 - 6/30/2017
Wage Rate Per Hour: 70% of Journeyperson's rate
Supplemental Rate Per Hour: $42.57

Iron Worker (Ornamental) - 29 - 36 Months

Effective Period: 7/1/2016 - 6/30/2017
Wage Rate Per Hour: 80% of Journeyperson's rate
Supplemental Rate Per Hour: $44.90

(Local #580)

IRON WORKER - STRUCTURAL
(Ratio of Apprentice to Journeyperson: 1 to 1, 1 to 6)

Iron Worker (Structural) - 1st Six Months

Effective Period: 7/1/2016 - 6/30/2017
Wage Rate per Hour: $25.85
Supplemental Benefit Rate per Hour: $48.35

Iron Worker (Structural) - 7- 18 Months

Effective Period: 7/1/2016 - 6/30/2017
Wage Rate per Hour: $26.45
Supplemental Benefit Rate per Hour: $48.35

Iron Worker (Structural) - 19 - 36 months

Effective Period: 7/1/2016 - 6/30/2017
Wage Rate per Hour: $27.05
Supplemental Benefit Rate per Hour: $48.35

(Local #40 and #361)

LABORER (FOUNDATION, CONCRETE, EXCAVATING, STREET PIPE LAYER & COMMON)

(Ratio Apprentice to Journeyperson: 1 to 1, 1 to 3)

Laborer (Foundation, Concrete, Excavating, Street Pipe Layer & Common) - First 1000 hours

Effective Period: 7/1/2016 - 6/30/2017
Wage Rate Per Hour: 50% of Journeyperson's rate
Supplemental Rate Per Hour: $38.63

Laborer (Foundation, Concrete, Excavating, Street Pipe Layer & Common) - Second 1000 hours

Effective Period: 7/1/2016 - 6/30/2017
Wage Rate Per Hour: 60% of Journeyperson's rate
Supplemental Rate Per Hour: $38.63

Laborer (Foundation, Concrete, Excavating, Street Pipe Layer & Common) - Third 1000 hours

Effective Period: 7/1/2016 - 6/30/2017
Wage Rate Per Hour: 75% of Journeyperson's rate
Supplemental Rate Per Hour: $38.63

Laborer (Foundation, Concrete, Excavating, Street Pipe Layer & Common) - Fourth 1000 hours

Effective Period: 7/1/2016 - 6/30/2017
Wage Rate Per Hour: 90% of Journeyperson's rate
Supplemental Rate Per Hour: $38.63

(Local #731)

MARBLE MECHANICS
(Ratio of Apprentice to Journeyperson: 1 to 1, 1 to 4)

Cutters & Setters - First 750 Hours

Effective Period: 7/1/2016 - 6/30/2017
Wage and Supplemental Rate Per Hour: 50% of Journeyperson's rate

NO BENEFITS PAID DURING THE FIRST TWO MONTHS (PROBATIONARY PERIOD)

Cutters & Setters - Second 750 Hours

Effective Period: 7/1/2016 - 6/30/2017
Wage and Supplemental Rate Per Hour: 55% of Journeyperson's rate

Cutters & Setters - Third 750 Hours

Effective Period: 7/1/2016 - 6/30/2017
Wage and Supplemental Rate Per Hour: 65% of Journeyperson's rate

Cutters & Setters - Fourth 750 Hours

Effective Period: 7/1/2016 - 6/30/2017
Wage and Supplemental Rate Per Hour: 75% of Journeyperson's rate

Cutters & Setters - Fifth 750 Hours

Effective Period: 7/1/2016 - 6/30/2017
Wage and Supplemental Rate Per Hour: 85% of Journeyperson's rate

Cutters & Setters - Sixth 750 Hours

Effective Period: 7/1/2016 - 6/30/2017
Wage and Supplemental Rate Per Hour: 95% of Journeyperson's rate

Polishers & Finishers - First 750 Hours

Effective Period: 7/1/2016 - 6/30/2017
Wage and Supplemental Rate Per Hour: 50% of Journeyperson's rate

NO BENEFITS PAID DURING THE FIRST TWO MONTHS (PROBATIONARY PERIOD)

Polishers & Finishers - Second 750 Hours

Effective Period: 7/1/2016 - 6/30/2017
Wage and Supplemental Rate Per Hour: 60% of Journeyperson's rate

Polishers & Finishers - Third 750 Hours

Effective Period: 7/1/2016 - 6/30/2017
Wage and Supplemental Rate Per Hour: 75% of Journeyperson's rate

Polishers & Finishers - Fourth 750 Hours

Effective Period: 7/1/2016 - 6/30/2017
Wage and Supplemental Rate Per Hour: 90% of Journeyperson's rate

(Local #7)

MASON TENDER
(Ratio of Apprentice to Journeyperson: 1 to 1, 1 to 3)

Mason Tender - First Year

Effective Period: 7/1/2016 - 6/30/2017
Wage Rate per Hour: $21.39
Supplemental Benefit Rate per Hour: $19.10

Mason Tender - Second Year

Effective Period: 7/1/2016 - 6/30/2017
Wage Rate per Hour: $22.54
Supplemental Benefit Rate per Hour: $19.10

Mason Tender - Third Year

Effective Period: 7/1/2016 - 6/30/2017
Wage Rate per Hour: $24.29
Supplemental Benefit Rate per Hour: $19.15

Mason Tender - Fourth Year

Effective Period: 7/1/2016 - 6/30/2017
Wage Rate per Hour: $26.95
Supplemental Benefit Rate per Hour: $19.15

(Local #79)

METALLIC LATHER
(Ratio of Apprentice to Journeyperson: 1 to 1, 1 to 3)

Metallic Lather (First Year)

Effective Period: 7/1/2016 - 6/30/2017
Wage Rate per Hour: $23.01
Supplemental Benefit Rate per Hour: $17.95

Metallic Lather (Second Year)

Effective Period: 7/1/2016 - 6/30/2017
Wage Rate per Hour: $28.11
Supplemental Benefit Rate per Hour: $17.95

Metallic Lather (Third Year)

Effective Period: 7/1/2016 - 6/30/2017
Wage Rate per Hour: $33.21
Supplemental Benefit Rate per Hour: $17.95

(Local #46)

MILLWRIGHT
(Ratio of Apprentice to Journeyperson: 1 to 1, 1 to 4)

Millwright (First Year)

Effective Period: 7/1/2016 - 6/30/2017
Wage Rate per Hour: $28.33
Supplemental Benefit Rate per Hour: $34.28

Millwright (Second Year)

Effective Period: 7/1/2016 - 6/30/2017
Wage Rate per Hour: $33.48
Supplemental Benefit Rate per Hour: $37.88

Millwright (Third Year)

Effective Period: 7/1/2016 - 6/30/2017
Wage Rate per Hour: $38.63
Supplemental Benefit Rate per Hour: $42.13

Millwright (Fourth Year)

Effective Period: 7/1/2016 - 6/30/2017
Wage Rate per Hour: $48.93
Supplemental Benefit Rate per Hour: $48.69

(Local #740)

PAVER AND ROADBUILDER
(Ratio of Apprentice to Journeyperson: 1 to 1, 1 to 3)

Paver and Roadbuilder - First Year (Minimum 1000 hours)

Effective Period: 7/1/2016 - 6/30/2017
Wage Rate per Hour: $27.55
Supplemental Benefit Rate per Hour: $18.20

Paver and Roadbuilder - Second Year (Minimum 1000 hours)

Effective Period: 7/1/2016 - 6/30/2017
Wage Rate per Hour: $29.19
Supplemental Benefit Rate per Hour: $18.20

(Local #1010)

PAINTER
(Ratio of Apprentice to Journeyperson: 1 to 1, 1 to 3)

Painter - Brush & Roller - First Year

Effective Period: 7/1/2016 - 4/30/2017
Wage Rate per Hour: $17.00
Supplemental Benefit Rate per Hour: $12.38

Effective Period: 5/1/2017 - 6/30/2017
Wage Rate per Hour: $17.64
Supplemental Benefit Rate per Hour: $12.78

Painter - Brush & Roller - Second Year

Effective Period: 7/1/2016 - 4/30/2017
Wage Rate per Hour: $21.25
Supplemental Benefit Rate per Hour: $16.23

Effective Period: 5/1/2017 - 6/30/2017
Wage Rate per Hour: $22.05
Supplemental Benefit Rate per Hour: $16.63

Painter - Brush & Roller - Third Year

Effective Period: 7/1/2016 - 4/30/2017
Wage Rate per Hour: $25.50
Supplemental Benefit Rate per Hour: $19.14

Effective Period: 5/1/2017 - 6/30/2017
Wage Rate per Hour: $26.46
Supplemental Benefit Rate per Hour: $19.54

Painter - Brush & Roller - Fourth Year

Effective Period: 7/1/2016 - 4/30/2017
Wage Rate per Hour: $34.00
Supplemental Benefit Rate per Hour: $24.52

Effective Period: 5/1/2017 - 6/30/2017
Wage Rate per Hour: $35.28
Supplemental Benefit Rate per Hour: $24.92

(District Council of Painters)

PAINTER - METAL POLISHER
(Ratio of Apprentice to Journeyperson: 1 to 1, 1 to 3)

Metal Polisher (First Year)

Effective Period: 7/1/2016 - 6/30/2017
Wage Rate per Hour: $11.75
Supplemental Benefit Rate per Hour: $5.13

Metal Polisher (Second Year)

Effective Period: 7/1/2016 - 6/30/2017
Wage Rate per Hour: $13.00
Supplemental Benefit Rate per Hour: $5.13

Metal Polisher (Third Year)

Effective Period: 7/1/2016 - 6/30/2017
Wage Rate per Hour: $15.75
Supplemental Benefit Rate per Hour: $5.13

(Local 8A-28)

PAINTER - STRUCTURAL STEEL
(Ratio of Apprentice to Journeyperson: 1 to 1, 1 to 3)

Painters - Structural Steel (First Year)

Effective Period: 7/1/2016 - 6/30/2017
Wage and Supplemental Rate Per Hour: 40% of Journeyperson's rate

Painters - Structural Steel (Second Year)

Effective Period: 7/1/2016 - 6/30/2017
Wage and Supplemental Rate Per Hour: 60% of Journeyperson's rate

Painters - Structural Steel (Third Year)

Effective Period: 7/1/2016 - 6/30/2017
Wage and Supplemental Rate Per Hour: 80% of Journeyperson's rate

(Local #806)

PLASTERER
(Ratio of Apprentice to Journeyperson: 1 to 1, 1 to 3)

Plasterer - First Year: 1st Six Months

Effective Period: 7/1/2016 - 6/30/2017
Wage Rate Per Hour: 40% of Journeyperson's rate
Supplemental Rate Per Hour: $15.91

Plasterer - First Year: 2nd Six Months

Effective Period: 7/1/2016 - 6/30/2017
Wage Rate Per Hour: 45% of Journeyperson's rate
Supplemental Rate Per Hour: $16.39

Plasterer - Second Year: 1st Six Months

Effective Period: 7/1/2016 - 6/30/2017
Wage Rate Per Hour: 55% of Journeyperson's rate
Supplemental Rate Per Hour: $18.36

Plasterer - Second Year: 2nd Six Months

Effective Period: 7/1/2016 - 6/30/2017
Wage Rate Per Hour: 60% of Journeyperson's rate
Supplemental Rate Per Hour: $19.44

Plasterer - Third Year: 1st Six Months

Effective Period: 7/1/2016 - 6/30/2017
Wage Rate Per Hour: 70% of Journeyperson's rate
Supplemental Rate Per Hour: $21.61

Plasterer - Third Year: 2nd Six Months

Effective Period: 7/1/2016 - 6/30/2017
Wage Rate Per Hour: 75% of Journeyperson's rate
Supplemental Rate Per Hour: $22.69

(Local #530)

PLASTERER - TENDER
(Ratio of Apprentice to Journeyperson: 1 to 1, 1 to 3)

Plasterer Tender - First Year

Effective Period: 7/1/2016 - 6/30/2017
Wage Rate per Hour: $21.39
Supplemental Benefit Rate per Hour: $19.10

Plasterer Tender - Second Year

Effective Period: 7/1/2016 - 6/30/2017
Wage Rate per Hour: $22.54
Supplemental Benefit Rate per Hour: $19.10

Plasterer Tender - Third Year

Effective Period: 7/1/2016 - 6/30/2017
Wage Rate per Hour: $24.29
Supplemental Benefit Rate per Hour: $19.15

Plasterer Tender - Fourth Year

Effective Period: 7/1/2016 - 6/30/2017
Wage Rate per Hour: $26.95
Supplemental Benefit Rate per Hour: $19.15

(Local #79)

PLUMBER
(Ratio of Apprentice to Journeyperson: 1 to 1, 1 to 3)

Plumber - First Year: 1st Six Months

Effective Period: 7/1/2016 - 6/30/2017

Wage Rate per Hour: $14.00
Supplemental Benefit Rate per Hour: $0.71

Plumber - First Year: 2nd Six Months

Effective Period: 7/1/2016 - 6/30/2017
Wage Rate per Hour: $14.00
Supplemental Benefit Rate per Hour: $2.96

Plumber - Second Year

Effective Period: 7/1/2016 - 6/30/2017
Wage Rate per Hour: $24.07
Supplemental Benefit Rate per Hour: $13.21

Plumber - Third Year

Effective Period: 7/1/2016 - 6/30/2017
Wage Rate per Hour: $26.17
Supplemental Benefit Rate per Hour: $13.21

Plumber - Fourth Year

Effective Period: 7/1/2016 - 6/30/2017
Wage Rate per Hour: $29.02
Supplemental Benefit Rate per Hour: $13.21

Plumber - Fifth Year: 1st Six Months

Effective Period: 7/1/2016 - 6/30/2017
Wage Rate per Hour: $30.42
Supplemental Benefit Rate per Hour: $13.21

Plumber - Fifth Year: 2nd Six Months

Effective Period: 7/1/2016 - 6/30/2017
Wage Rate per Hour: $42.49
Supplemental Benefit Rate per Hour: $13.21

(Plumbers Local #1)

POINTER, WATERPROOFER, CAULKER, SANDBLASTER, STEAMBLASTER
(Exterior Building Renovation)
(Ratio of Apprentice to Journeyperson: 1 to 1, 1 to 4)

Pointer, Waterproofer, Caulker, Sandblaster, Steamblaster - First Year

Effective Period: 7/1/2016 - 6/30/2017
Wage Rate per Hour: $26.52
Supplemental Benefit Rate per Hour: $12.10

Pointer, Waterproofer, Caulker, Sandblaster, Steamblaster - Second Year

Effective Period: 7/1/2016 - 6/30/2017
Wage Rate per Hour: $27.89
Supplemental Benefit Rate per Hour: $16.75

Pointer, Waterproofer, Caulker, Sandblaster, Steamblaster - Third Year

Effective Period: 7/1/2016 - 6/30/2017
Wage Rate per Hour: $33.98
Supplemental Benefit Rate per Hour: $19.50

Pointer, Waterproofer, Caulker, Sandblaster, Steamblaster - Fourth Year

Effective Period: 7/1/2016 - 6/30/2017
Wage Rate per Hour: $40.80
Supplemental Benefit Rate per Hour: $20.35

(Bricklayer District Council)

ROOFER
(Ratio of Apprentice to Journeyperson: 1 to 1, 1 to 2)

Roofer - First Year

Effective Period: 7/1/2016 - 6/30/2017
Wage and Supplemental Rate Per Hour: 35% of Journeyperson's Rate

Roofer - Second Year

Effective Period: 7/1/2016 - 6/30/2017
Wage and Supplemental Rate Per Hour: 50% of Journeyperson's Rate

Roofer - Third Year

Effective Period: 7/1/2016 - 6/30/2017
Wage and Supplemental Rate Per Hour: 60% of Journeyperson's Rate

Roofer - Fourth Year

Effective Period: 7/1/2016 - 6/30/2017
Wage and Supplemental Rate Per Hour: 75% of Journeyperson's Rate

(Local #8)

SHEET METAL WORKER
(Ratio of Apprentice to Journeyperson: 1 to 1, 1 to 3)

Sheet Metal Worker (0-6 Months)

Effective Period: 7/1/2016 - 6/30/2017
Wage Rate Per Hour: 25% of Journeyperson's rate
Supplemental Rate Per Hour: $6.35

Sheet Metal Worker (7-18 Months)

Effective Period: 7/1/2016 - 6/30/2017
Wage Rate Per Hour: 35% of Journeyperson's rate
Supplemental Rate Per Hour: $17.12

Sheet Metal Worker (19-30 Months)

Effective Period: 7/1/2016 - 6/30/2017
Wage Rate Per Hour: 45% of Journeyperson's rate
Supplemental Rate Per Hour: $23.54

Sheet Metal Worker (31-36 Months)

Effective Period: 7/1/2016 - 6/30/2017
Wage Rate Per Hour: 55% of Journeyperson's rate
Supplemental Rate Per Hour: $27.70

Sheet Metal Worker (37-42 Months)

Effective Period: 7/1/2016 - 6/30/2017

Wage Rate Per Hour: 60% of Journeyperson's rate
Supplemental Rate Per Hour: $29.11

Sheet Metal Worker (43-48 Months)

Effective Period: 7/1/2016 - 6/30/2017
Wage Rate Per Hour: 70% of Journeyperson's rate
Supplemental Rate Per Hour: $33.96

Sheet Metal Worker (49-54 Months)

Effective Period: 7/1/2016 - 6/30/2017
Wage Rate Per Hour: 75% of Journeyperson's rate
Supplemental Rate Per Hour: $36.07

Sheet Metal Worker (55-60 Months)

Effective Period: 7/1/2016 - 6/30/2017
Wage Rate Per Hour: 80% of Journeyperson's rate
Supplemental Rate Per Hour: $38.15

(Local #28)

SIGN ERECTOR
(Ratio of Apprentice to Journeyperson: 1 to 1, 1 to 4)

Sign Erector - First Year: 1st Six Months

Effective Period: 7/1/2016 - 6/30/2017
Wage Rate Per Hour: 35% of Journeyperson's rate
Supplemental Rate Per Hour: $13.95

Sign Erector - First Year: 2nd Six Months

Effective Period: 7/1/2016 - 6/30/2017
Wage Rate Per Hour: 40% of Journeyperson's rate
Supplemental Rate Per Hour: $15.83

Sign Erector - Second Year: 1st Six Months

Effective Period: 7/1/2016 - 6/30/2017
Wage Rate Per Hour: 45% of Journeyperson's rate
Supplemental Rate Per Hour: $17.72

Sign Erector - Second Year: 2nd Six Months

Effective Period: 7/1/2016 - 6/30/2017
Wage Rate Per Hour: 50% of Journeyperson's rate
Supplemental Rate Per Hour: $19.60

Sign Erector - Third Year: 1st Six Months

Effective Period: 7/1/2016 - 6/30/2017
Wage Rate Per Hour: 55% of Journeyperson's rate
Supplemental Rate Per Hour: $26.23

Sign Erector - Third Year: 2nd Six Months

Effective Period: 7/1/2016 - 6/30/2017
Wage Rate Per Hour: 60% of Journeyperson's rate
Supplemental Rate Per Hour: $28.24

Sign Erector - Fourth Year: 1st Six Months

Effective Period: 7/1/2016 - 6/30/2017
Wage Rate Per Hour: 65% of Journeyperson's rate
Supplemental Rate Per Hour: $30.98

Sign Erector - Fourth Year: 2nd Six Months

Effective Period: 7/1/2016 - 6/30/2017
Wage Rate Per Hour: 70% of Journeyperson's rate
Supplemental Rate Per Hour: $33.06

Sign Erector - Fifth Year

Effective Period: 7/1/2016 - 6/30/2017
Wage Rate Per Hour: 75% of Journeyperson's rate
Supplemental Rate Per Hour: $35.15

Sign Erector - Sixth Year

Effective Period: 7/1/2016 - 6/30/2017
Wage Rate Per Hour: 80% of Journeyperson's rate
Supplemental Rate Per Hour: $37.22

(Local #137)

STEAMFITTER
(Ratio of Apprentice to Journeyperson: 1 to 1, 1 to 3)

Steamfitter - First Year

Effective Period: 7/1/2016 - 6/30/2017
Wage Rate and Supplemental Per Hour: 40% of Journeyperson's rate

Steamfitter - Second Year

Effective Period: 7/1/2016 - 6/30/2017
Wage Rate and Supplemental Rate Per Hour: 50% of Journeyperson's rate.

Steamfitter - Third Year

Effective Period: 7/1/2016 - 6/30/2017
Wage Rate and Supplemental Rate per Hour: 65% of Journeyperson's rate.

Steamfitter - Fourth Year

Effective Period: 7/1/2016 - 6/30/2017
Wage Rate and Supplemental Rate Per Hour: 80% of Journeyperson's rate.

Steamfitter - Fifth Year

Effective Period: 7/1/2016 - 6/30/2017
Wage Rate and Supplemental Rate Per Hour: 85% of Journeyperson's rate.

(Local #638)

STONE MASON - SETTER
(Ratio Apprentice of Journeyperson: 1 to 1, 1 to 2)

Stone Mason - Setters - First 750 Hours

Effective Period: 7/1/2016 - 6/30/2017
Wage and Supplemental Rate Per Hour: 50% of Journeyperson's rate

Stone Mason - Setters - Second 750 Hours

Effective Period: 7/1/2016 - 6/30/2017
Wage Rate Per Hour: 60% of Journeyperson's rate
Supplemental Rate Per Hour: 50% of Journeyperson's rate

Stone Mason - Setters - Third 750 Hours

Effective Period: 7/1/2016 - 6/30/2017
Wage Rate Per Hour: 70% of Journeyperson's rate
Supplemental Rate Per Hour: 50% of Journeyperson's rate

Stone Mason - Setters - Fourth 750 Hours

Effective Period: 7/1/2016 - 6/30/2017
Wage Rate Per Hour: 80% of Journeyperson's rate
Supplemental Rate Per Hour: 50% of Journeyperson's rate

Stone Mason - Setters - Fifth 750 Hours

Effective Period: 7/1/2016 - 6/30/2017
Wage Rate Per Hour: 90% of Journeyperson's rate
Supplemental Rate Per Hour: 50% of Journeyperson's rate

Stone Mason - Setters - Sixth 750 Hours

Effective Period: 7/1/2016 - 6/30/2017
Wage Rate Per Hour: 100% of Journeyperson's rate
Supplemental Rate Per Hour: 50% of Journeyperson's rate

(Bricklayers District Council)

TAPER
(Ratio of Apprentice to Journeyperson: 1 to 1, 1 to 4)

Drywall Taper - First Year

Effective Period: 7/1/2016 - 6/30/2017
Wage and Supplemental Rate Per Hour: 40% of Journeyperson's rate

Drywall Taper - Second Year

Effective Period: 7/1/2016 - 6/30/2017
Wage and Supplemental Rate Per Hour: 60% of Journeyperson's rate

Drywall Taper - Third Year

Effective Period: 7/1/2016 - 6/30/2017
Wage and Supplemental Rate Per Hour: 80% of Journeyperson's rate

(Local #1974)

TILE LAYER - SETTER
(Ratio of Apprentice to Journeyperson: 1 to 1, 1 to 4)

Tile Layer - Setter - First 750 Hours

Effective Period: 7/1/2016 - 6/30/2017
Wage and Supplemental Rate Per Hour: 50% of Journeyperson's rate

Tile Layer - Setter - Second 750 Hours

Effective Period: 7/1/2016 - 6/30/2017
Wage and Supplemental Rate Per Hour: 55% of Journeyperson's rate

Tile Layer - Setter - Third 750 Hours

Effective Period: 7/1/2016 - 6/30/2017
Wage and Supplemental Rate Per Hour: 65% of Journeyperson's rate

Tile Layer - Setter - Fourth 750 Hours

Effective Period: 7/1/2016 - 6/30/2017
Wage and Supplemental Rate Per Hour: 75% of Journeyperson's rate

Tile Layer - Setter - Fifth 750 Hours

Effective Period: 7/1/2016 - 6/30/2017
Wage and Supplemental Rate Per Hour: 85% of Journeyperson's rate

Tile Layer - Setter - Sixth 750 Hours

Effective Period: 7/1/2016 - 6/30/2017
Wage and Supplemental Rate Per Hour: 95% of Journeyperson's rate

(Local #7)

TIMBERPERSON
(Ratio of Apprentice to Journeyperson: 1 to 1, 1 to 6)

Timberperson - First Year

Effective Period: 7/1/2016 - 6/30/2017
Wage Rate Per Hour: 40% of Journeyperson's rate
Supplemental Rate Per Hour: $32.33

Timberperson - Second Year

Effective Period: 7/1/2016 - 6/30/2017
Wage Rate Per Hour: 50% of Journeyperson's rate
Supplemental Rate Per Hour: $32.33

Timberperson - Third Year

Effective Period: 7/1/2016 - 6/30/2017
Wage Rate Per Hour: 65% of Journeyperson's rate
Supplemental Rate Per Hour: $32.33

Timberperson - Fourth Year

Effective Period: 7/1/2016 - 6/30/2017
Wage Rate Per Hour: 80% of Journeyperson's rate
Supplemental Rate Per Hour: $32.33

(Local #1536)

NYC ADMINISTRATIVE CODE § 6-109 SCHEDULE OF "LIVING WAGES"

Contractors who provide the following services to the City of New York must post a copy of this Living Wage Schedule at their work site(s) as required by New York City Administrative Code § 6-109:

- **Building Services,**
- **Day Care Services,**
- **Food Services,**
- **Head Start Services,**
- **Homecare Services,**
- **Services to Persons with Cerebral Palsy, and**
- **Temporary Services.**

In accordance with NYC Administrative Code § 6-109, the Comptroller of the City of New York promulgated this schedule of living wages for the above services on contracts for non-emergency work in excess of the small purchase limit set by the Procurement Policy Board; contracting agencies must annex this schedule to such contracts.

This schedule is a compilation of separate determinations of the prevailing rate of wage and supplements made by the Comptroller for each trade classification listed herein pursuant to New York City Administrative Code section 6-109. The source of the wage and supplement rates, whether a collective bargaining agreement, survey data or other, is listed at the end of each classification.

A city service contractor or subcontractor that provides homecare services, day care services, head start services or services to persons with cerebral palsy must pay its covered employees that directly render such services in performance of the city service contract or subcontract no less than the living wage and must provide its employees health benefits (supplemental benefits) or must supplement their hourly wage rate by an amount no less than the health benefits supplement rate. This requirement applies for each hour that the employee works performing the city service contract or subcontract.

A city service contractor or subcontractor that provides building services, food services or temporary services must pay its employees that are engaged in performing the city service contract or subcontract no less than the living wage or the prevailing wage, whichever is greater. Where the living wage is greater than the prevailing wage, the city service contractor or subcontractor must either provide its employees health benefits or must supplement their hourly wage rate by an amount no less than the health benefits supplement rate. Where the prevailing wage is greater than the living wage, the city service contractor or subcontractor must provide its employees the prevailing wage and supplements. These requirements apply for each hour that the employee works performing the city service contract or subcontract.

The appropriate schedule of living wages must be posted at all work sites pursuant to NYC Administrative Code 6-109.

The schedule is applicable for work performed during the effective period, unless otherwise noted. You will be notified of any changes to this schedule by addenda published on our web site www.comptroller.nyc.gov. Schedules for future one-year periods will be published annually in the City Record on or about July 1st of each succeeding year and on our web site www.comptroller.nyc.gov.

The living wage rate and the health benefit supplement rate are known through June 30 of each year and those rates are listed in this schedule.

The living wage rates listed in this schedule may not include all hourly wage calculations for overtime, shift differential, Holiday, Saturday, Sunday or other premium time work. Similarly, this schedule does not set forth every living wage practice with which employers must comply.

Some of the rates in this schedule are based on collective bargaining agreements. These agreements are available for inspection by appointment. Requests for appointments may be made by calling (212) 669-4443, Monday through Friday between the hours of 9 a.m. and 5 p.m.

Answers to questions concerning prevailing wage practices may be obtained from the Classification Unit by calling (212) 669-7974. Please direct all other compliance issues to; Bureau of Labor Law, Attn: Wasyl Kinach, P.E., Office of the Comptroller, 1 Centre Street, Room 1122, New York, N.Y. 10007; Fax (212) 669-4002.

Contractors are solely responsible for maintaining original payroll records, which delineate, among other things, the hours each employee worked within a given classification. Contractors using rates and/or classifications not promulgated by the Comptroller do so at their own risk. Additionally, prior to bid, an agency's chief contracting officer must contact the Bureau of Labor Law to obtain a wage determination for a work classification not published in this schedule.

The information listed below is intended to assist you in meeting your living wage and prevailing wage obligation. Contractors are advised to review the Comptroller's Living Wage Schedule prior to submitting a bid for City work. Any wage rate error made by the contracting agency in the contract documents will not preclude a finding against the contractor for an underpayment of the applicable living wage or the applicable prevailing wage.

This schedule sets forth the living wage and benefit rates required to be annexed to and form part of the contract specifications for work covered by New York City Administrative Code § 6-109. Contractors performing such work are required to pay not less that the rates specified in this schedule for the applicable trade or occupation.

Benefits are paid for *EACH HOUR WORKED* unless otherwise noted.

Wasyl Kinach, P.E.
Director of Classifications
Bureau of Labor Law

TABLE OF CONTENTS

CLASSIFICATION	PAGE
BUILDING CLEANER AND MAINTAINER (OFFICE)	4
BUILDING CLEANER AND MAINTAINER (RESIDENTIAL)	4
CLEANER (PARKING GARAGE)	4
DAY CARE SERVICES	4
FOOD SERVICE EMPLOYEES	4
HEAD START SERVICES	5
HOMECARE SERVICES	6
LANDSCAPING AND GROUNDSKEEPING WORKER	6
SECURITY GUARD (ARMED)	6
SECURITY GUARD (UNARMED)	6
SERVICES TO PERSONS WITH CEREBRAL PALSY	7
TEMPORARY OFFICE SERVICES	7
WINDOW CLEANER	8

BUILDING CLEANER AND MAINTAINER (OFFICE)

For the above building service classification, see the Labor Law Section 230 Schedule.

BUILDING CLEANER AND MAINTAINER (RESIDENTIAL)

For the above building service classification, see the Labor Law Section 230 Schedule.

CLEANER (PARKING GARAGE)

For the above building service classification, see the Labor Law Section 230 Schedule.

DAY CARE SERVICES

Day Care Services

'Day Care Services' means provision of day care services through the city's center-based day care program administered under contract with the city's Administration for Children's Services. No other day care programs shall be covered, including family-based day care programs administered by city-contracted day care centers.

Effective Period: 7/1/2016 - 6/30/2017
Wage Rate per Hour: $10.00
Supplemental Benefit Rate per Hour: $1.50

(NYC Administrative Code §6-109)

FOOD SERVICE EMPLOYEES

Cook

Effective Period: 7/1/2016 - 6/30/2017
Wage Rate per Hour: $16.81
Supplemental Benefit Rate per Hour: $1.75

Cafeteria Attendant

Effective Period: 7/1/2016 - 6/30/2017
Wage Rate per Hour: $12.81
Supplemental Benefit Rate per Hour: $1.75

Counter Attendant

Effective Period: 7/1/2016 - 6/30/2017
Wage Rate per Hour: $12.24
Supplemental Benefit Rate per Hour: $1.75

Kitchen Helper / Dishwasher

Effective Period: 7/1/2016 - 6/30/2017
Wage Rate per Hour: $11.94
Supplemental Benefit Rate per Hour: $1.75

Overtime

Time and one half the regular hourly rate after 40 hours in any work week.

(Based on data from NYS Department of Labor Occupational Employment Statistics and US Department of Labor Bureau of Labor Statistics)

HEAD START SERVICES

Head Start Services

'Head Start Services' means provision of head start services through the city's center-based head start program administered under contract with the city's Administration for Children's Services. No other head start programs shall be covered.

Effective Period: 7/1/2016 - 6/30/2017
Wage Rate per Hour: $10.00
Supplemental Benefit Rate per Hour: $1.50

(NYC Administrative Code §6-109)

HOMECARE SERVICES

Home Care Services

'Homecare Services' means the provision of homecare services under the city's Medicaid Personal Care/Home Attendant or Housekeeping Programs, including but not limited to the In-Home Services for the Elderly Programs administered by the Department for the Aging.
For homecare services provided under the Personal Care Services program, the wage and supplemental benefit rate above shall apply only as long as the state and federal government maintain their combined aggregate proportionate share of funding and approved rates for homecare services in effect as of the date of the enactment of this section.
For contractors or subcontractors providing homecare services, the supplemental benefit rate may be waived by the terms of a bona fide collective bargaining agreement with respect to employees who have never worked a minimum of eighty (80) hours per month for two consecutive months for that covered employer, but such provision may not be waived for any employee once a minimum of eighty (80) hours for two consecutive months has been achieved.

Effective Period: 7/1/2016 - 6/30/2017
Wage Rate per Hour: $10.00
Supplemental Benefit Rate per Hour: $1.50

(NYC Administrative Code §6-109)

LANDSCAPING AND GROUNDSKEEPING WORKER

For the above building service classification, see the Labor Law Section 230 Schedule.

SECURITY GUARD (ARMED)

For the above building service classification, see the Labor Law Section 230 Schedule.

SECURITY GUARD (UNARMED)

For the above building service classification, see the Labor Law Section 230 Schedule.

SERVICES TO PERSONS WITH CEREBRAL PALSY

Services To Person With Cerebral Palsy

'Services to Persons with Cerebral Palsy' means provision of services which enable persons with cerebral palsy and related disabilities to lead independent and productive lives through an agency that provides health care, education, employment, housing and technology resources to such persons under contract with the city or the department of education.

Effective Period: 7/1/2016 - 6/30/2017
Wage Rate per Hour: $10.00
Supplemental Benefit Rate per Hour: $1.50

(NYC Administrative Code §6-109)

TEMPORARY OFFICE SERVICES

Administrative Assistant

Effective Period: 7/1/2016 - 6/30/2017
Wage Rate per Hour: $34.97
Supplemental Benefit Rate per Hour: None

Cashier

Effective Period: 7/1/2016 - 6/30/2017
Wage Rate per Hour: $11.50
Supplemental Benefit Rate per Hour: None

Clerk (various)

Effective Period: 7/1/2016 - 6/30/2017
Wage Rate per Hour: $16.07
Supplemental Benefit Rate per Hour: None

Computer Assistant

Effective Period: 7/1/2016 - 6/30/2017
Wage Rate per Hour: $19.07
Supplemental Benefit Rate per Hour: None

Data Entry Operator

Effective Period: 7/1/2016 - 6/30/2017
Wage Rate per Hour: $16.70
Supplemental Benefit Rate per Hour: None

Receptionist

Effective Period: 7/1/2016 - 6/30/2017
Wage Rate per Hour: $15.78
Supplemental Benefit Rate per Hour: None

Secretary (various)

Effective Period: 7/1/2016 - 6/30/2017
Wage Rate per Hour: $20.22
Supplemental Benefit Rate per Hour: None

Word Processor

Effective Period: 7/1/2016 - 6/30/2017
Wage Rate per Hour: $20.32
Supplemental Benefit Rate per Hour: None

Overtime

Time and one half the regular hourly rate after 40 hours in any work week.

(Based on data from NYS Department of Labor Occupational Employment Statistics and US Department of Labor Bureau of Labor Statistics or NYC Administrative Code §6-109)

WINDOW CLEANER

For the above building service classification, see the Labor Law Section 230 Schedule.

THE CITY OF NEW YORK
OFFICE OF THE COMPTROLLER
1 CENTRE STREET ROOM 1120
NEW YORK, N.Y. 10007-2341

TELEPHONE: (212) 669-362
FAX NUMBER: (212) 669-849

Leonard A. Mancusi
SENIOR ASSISTANT COMPTROLLER

ALAN G. HEVESI
COMPTROLLER

MEMORANDUM

November 6, 2000

To *Agency Chief Contracting Officers*

From: *Leonard A. Mancusi*

Re: *Security at Construction Sites*

Prior to the enactment of Administrative Code §6-109, security guards on construction sites were not subject to prevailing wages. Security guards under the New York State labor law are covered under §230 which provides that prevailing wages are to be paid for security guards in existing buildings. §6-109 of the Administrative Code which was enacted in 1996 closed this loophole by including all security guards working pursuant to a city contract as a prevailing wage trade.

Although some construction contract boilerplate language has been amended to include §6-109, sub-contractors performing security services have advised us that they were not aware of this provision and, since traditionally, security guards were not a covered trade on construction sites, and they were not advised by a prime contractor that they would have to pay prevailing wages, they have not been doing so.

To avoid the possibility of issuing stop payments against prime contractors for the failure of their security service sub-contractors to pay

prevailing wages, we suggest that you write to all your existing security guard sub-contractors and their primes and in the future, upon approval of a security guard sub-contractor, advise the contractors of their obligation to pay prevailing wages under §6-109 of the Administrative Code.

As always, your cooperation is appreciated.

LAM:er
ACCO.SECURITY AT SITES

Department of Design and Construction

INFRASTRUCTURE DIVISION
BUREAU OF DESIGN

VOLUME 2 OF 3

Contractor.

Dated_____, 20____

APPROVED AS TO FORM
CERTIFIED AS TO LEGAL AUTHORITY

Acting Corporation Counsel

Dated_____, 20____

Department of Design and Construction

THE CITY OF NEW YORK
DEPARTMENT OF DESIGN AND CONSTRUCTION
DIVISION OF INFRASTRUCTURE

30-30 THOMSON AVENUE
LONG ISLAND CITY, NEW YORK 11101-3045
TELEPHONE (718) 391-1000
WEBSITE www.nyc.gov/buildnyc

VOLUME 3 OF 3

SCHEDULE A
SPECIFICATIONS AND
REVISIONS TO STANDARD SPECIFICATIONS

FOR FURNISHING ALL LABOR AND MATERIALS NECESSARY AND REQUIRED FOR:

PROJECT ID: HWXP136B

RECONSTRUCTION OF GRAND CONCOURSE SERVICE ROADS, RESURFACING OF THE MAIN ROADWAY AND WIDENING OF MEDIANS FROM EAST 171ST STREET TO EAST 175TH STREET

INCLUDING SEWER, WATER MAIN, STREET LIGHTING, AND TRAFFIC SIGNAL WORK

Together With All Work Incidental Thereto

BOROUGH OF THE BRONX
CITY OF NEW YORK

FOR THE DEPARTMENT OF TRANSPORTATION
PREPARED BY IN-HOUSE DESIGN

JULY 25, 2016

NYSDOT PIN X761.16
Fed. Aid Project No. _____

Bid Opening 11:00 A.M. on _____
Location 1st Floor Bid Room, 30-30 Thomson Ave., Long Island City, N.Y. 11101

17-009

SPECIFICATIONS AND STANDARDS OF NEW YORK CITY

The following New York City Department of Transportation (NYCDOT) reference documents are available on-line at: http://www1.nyc.gov/site/ddc/resources/publications.page or for purchase between 9:00 A.M. and 3:00 P.M. at 55 Water St., Ground Floor, NYC, N.Y. 10041. Contact: Ms. Vivian Valdez, Tel. (212) 839-9434

1. NYCDOT Standard Highway Specifications, August 1, 2015
2. NYCDOT Standard Highway Details of Construction, July 1, 2010
3. NYCDOT Division of Street Lighting Specifications
4. NYCDOT Division of Street Lighting Standard Drawings
5. NYCDOT Standard Specifications for Traffic Signals
6. NYCDOT Standard Drawings for Traffic Signals

The following reference documents for New York City Department of Environmental Protection (NYCDEP) are available on-line at: http://www1.nyc.gov/site/ddc/resources/publications.page or for pick up between 8:00 A.M. and 4:00 P.M. at 30-30 Thomson Avenue, 3rd Floor, Division of Infrastructure, Long Island City, N.Y. 11101.
Contact: Mr. Waqar Ahmad, Tel. (718) 391-2056

1. NYCDEP Standard Sewer and Water Main Specifications, July 1, 2014
2. NYCDEP Instructions for Concrete Specifications, Jan. 92
3. NYCDEP General Specification 11-Concrete, November 1991
4. NYCDEP Sewer Design Standards, (September 2007) Revised January 2009

The following reference documents for New York City Department of Environmental Protection (NYCDEP) are available on-line at: http://www1.nyc.gov/site/ddc/resources/publications.page or for pick up between 8:00 A.M. and 4:00 P.M. at 30-30 Thomson Avenue, 3rd Floor, Division of Infrastructure, Long Island City, N.Y. 11101.
Contact: Mr. Robert Kuhlmann, Tel. (718) 391-2145

1. NYCDEP Water Main Standard Drawings, November 2010
2. Specifications for Trunk Main Work, July 2014
3. Standards for Green Infrastructure, latest version, available only on-line at: http://www.nyc.gov/html/dep/html/stormwater/green_infrastructure_standards.shtml

Water main work material specifications are available at the Department of Environmental Protection, 59-17 Junction Boulevard, 3rd Floor Low-Rise Building, Flushing, N.Y. 11373-5108.
Contact: Mr. Tarlock Sahansra, P.E., Tel. (718) 595-5302
E-mail: TSAHANSRA@DEP.NYC.GOV

Standard Specifications and Drawings for New York City Fire Department Communications facilities are available from the FDNY Facilities Management Bureau, Plant Operations Engineering, 316 Sgt. Beers Avenue Cluster 1 Box 16, Fort Totten, N.Y. 11359.
Contact: Mr. Ed Durkin, Tel. (718) 281-3933

Tree Planting Standards of the City of New York Parks & Recreation are available at the following Department of Parks & Recreation website: http://www.nycgovparks.org/pagefiles/53/Tree-Planting-Standards.pdf

SPECIFICATIONS AND STANDARDS OF PRIVATE UTILITIES

The Following reference document for Private Utility Work is available for pick up between 8:30 A.M. and 4:00 P.M. at 30-30 Thomson Avenue, First Floor Bid Procurement Room, L.I.C., N.Y. 11101.

1. CET SPECIFICATIONS AND SKETCHES dated November 2010

VOLUME 3 OF 3

TABLE OF CONTENTS

SECTION	DESCRIPTION	PAGES
SCHEDULE A	GENERAL CONDITIONS TO CONSTRUCTION CONTRACT	SA-1 to SA-14
R – PAGES AND SB-16-001	REVISIONS TO STANDARD SPECIFICATIONS SPECIFICATION BULLETIN	1 of 3 to 3 of 3
I - PAGES	NEW SECTIONS	I-1 to I-24
S – PAGES	SPECIAL PROVISIONS	S-1 to S-28
TF-PAGES	FHWA FUNDED PROJECTS FHWA FUNDING ATTACHMENTS	TF-1 to TF-K2
EP7 - PAGES	GAS COST SHARING (EP-7) STANDARD SPECIFICATIONS	EP7-1 to EP7-28A
SW - PAGES	SEWER AND WATER MAIN SPECIFICATIONS	SW-1 to SW-8
HAZ - PAGES	SPECIFICATIONS FOR HANDLING, TRANSPORTATION AND DISPOSAL OF NONHAZARDOUS AND POTENTIALLY HAZARDOUS CONTAMINATED MATERIALS	HAZ-1 to HAZ-87
U - PAGES	SECTION U (VERSION 2.0)	U-1 to U-15

(NO TEXT ON THIS PAGE)

SCHEDULE A

GENERAL CONDITIONS TO CONSTRUCTION CONTRACT (INCLUDING GENERAL CONDITIONS RELATED TO ARTICLE 22 – INSURANCE)

PART I. REQUIRED INFORMATION

INFORMATION FOR BIDDERS SECTION 26 BID SECURITY The **Contractor** shall obtain a bid security in the amount indicated to the right.	Required provided the TOTAL BID PRICE set forth on the Bid Form is $1,000,000 or more. Certified Check: 5% of Bid Amount or Bond: 10% of Bid Amount
INFORMATION FOR BIDDERS SECTION 26 PERFORMANCE AND PAYMENT BONDS The **Contractor** shall obtain performance and payment bonds in the amount indicated to the right.	Required for contracts in the amount of $1,000,000 or more. Performance Security and Payment Security shall each be in an amount equal to 100% of the Contract Price.
CONTRACT ARTICLE 14. DATE FOR SUBSTANTIAL COMPLETION The **Contractor** shall substantially complete the **Work** in the number of calendar days indicated to the right.	See Page SA-4
CONTRACT ARTICLE 15. LIQUIDATED DAMAGES If the **Contractor** fails to substantially complete the **Work** within the time fixed for substantial completion plus authorized time extensions or if the **Contractor**, in the sole determination of the **Commissioner**, has abandoned the **Work**, the **Contractor** shall pay to the **City** the amount indicated to the right.	$ 1,500. for each consecutive calendar day over substantial completion time
CONTRACT ARTICLE 17. SUB-CONTRACTOR The **Contractor** shall not make subcontracts totaling an amount more than the percentage of the total **Contract** price indicated to the right.	Not to exceed 50 % of the **Contract** price
CONTRACT ARTICLE 21. RETAINAGE The **Commissioner** shall deduct and retain until the substantial completion of the **Work** the percent value of the **Work** indicated to the right.	0 % of the value of the **Work**

CONTRACT ARTICLE 22. **(Per Directions Below)**	See pages SA-5 through SA-13
CONTRACT ARTICLE 24. **DEPOSIT GUARANTEE** As security for the faithful performance of its obligations, the **Contractor**, upon filing its requisition for payment on **Substantial Completion**, shall deposit with the **Commissioner** a sum equal to the percentage of the **Contract** price indicated to the right.	1% of **Contract** price
CONTRACT ARTICLE 24. **PERIOD OF GUARANTEE** Periods of maintenance and guarantee other than the period set forth in Article 24.1 are indicated to the right.	Twenty-four (24) Months for Tree Planting
CONTRACT ARTICLE 74. **STATEMENT OF WORK** The **Contractor** shall furnish all labor and materials and perform all **Work** in strict accordance with the **Contract Drawings**, **Specifications,** and all **Addenda** thereto.	See Contract Article 74
CONTRACT ARTICLE 75. **COMPENSATION TO BE PAID TO CONTRACTOR** The **City** shall pay and the **Contractor** shall accept in full consideration for the performance of the **Contract**, subject to additions and deductions as provided in Contract Article 75, this said sum being the amount at which the **Contract** was awarded to the **Contractor** at a public letting thereof, based upon the **Contractor's** bid for the **Contract.**	See Contract Article 75
CONTRACT ARTICLE 78. **PARTICIPATION BY MINORITY-OWNED AND WOMEN-OWNED BUSINESS ENTERPRISES IN CITY PROCUREMENT**	EXEMPT (DBE Goals of 13%, see page TF-H1, herein this book Volum 3 of 3)

STANDARD HIGHWAY SPECIFICATIONS SECTION 6.40 LIQUIDATED DAMAGES FOR ENGINEER'S FIELD OFFICE If the Contractor fails to satisfactorily provide the field office and all equipment specified in **Section 6.40 - Engineer's Field Office**, and/or if a cited deficiency exceed seventy two (72) hours after notice from the Engineer in writing, or is permitted to recur, liquidated damages will be assessed in the amount specified herein for each subsequent calendar day or part thereof that a cited deficiency resulting in nonpayment, as described in **Section 6.40.5**, is not corrected.	$ 250.00 for each calendar day of deficiency
STANDARD HIGHWAY SPECIFICATIONS SECTION 6.70 LIQUIDATED DAMAGES FOR MAINTENANCE AND PROTECTION OF TRAFFIC	$ 250.00 for each instance of failure to comply with the Maintenance and Protection of Traffic requirements within three (3) hours after written notice from the Engineer $ 500.00 for each and every hour of failing to open the entire width of roadway to traffic the morning following a night/weekend work operation
STANDARD HIGHWAY SPECIFICATIONS SECTION 7.13 LIQUIDATED DAMAGES FOR MAINTENANCE OF SITE If the Contractor fails to comply, within three (3) consecutive hours after written notice from the Engineer, with the requirements of **Section 7.13 - Maintenance of Site**, the Contractor shall pay to the City of New York, until such notice has been complied with or rescinded, the sum specified above per calendar day, for each instance of such failure, as liquidated damages and not as a penalty, for such default.	$ 250.00 for each calendar day, for each occurrence

Date for Substantial Completion (Reference: Article 14)

The Contractor shall substantially complete the Work within the Final Contract Duration determined in accordance with the terms and conditions set forth herein.

The Base Contract Duration for this project is 730 consecutive calendar days ("ccds").

The Final Contract Duration shall be the Base Contract Duration when a check mark is indicated before the word "NO", below, and shall be the Base Contract Duration adjusted by the table set forth below when a check mark is indicated before the word "YES", below.

√ YES _____ NO

When the Final Contract Duration is indicated above to be adjusted by the table below, the table may increase the Base Contract Duration depending on the date of scheduled substantial completion to avoid a scheduled substantial completion of the Work during the winter months. The date of scheduled substantial completion shall be determined by adding the Base Contract Duration to the date specified to commence work in the written Notice to Proceed. The Final Contract Duration shall then be determined as follows:

(a) Find the row that corresponds to the month of substantial completion based on the Base Contract Duration added to the date specified to commence work in the written Notice to Proceed.

(b) Find the number of days to be added to the Base Contract Duration in the table below. Add that number of days to the Base Contract Duration to obtain the Final Contract Duration in consecutive calendar days.

Month of Substantial Completion based on the Base Contract Duration	Number of Days of adjustment
January	150
February	120
March	90
April	60
May	30
June	0
July	0
August	0
September	0
October	0
November –December 15	0
December 16 – December 31	180

In addition, should Item No. 9.30, "Storm Water Pollution Prevention," exist in the Contract and the required Storm Water Pollution Prevention Plan (SWPPP) does not conform to NYSDEC's recommended Standards, an additional 60 ccd shall be added to the above Final Contract Duration.

(GENERAL CONDITIONS RELATING TO ARTICLE 22 – INSURANCE)

PART II. TYPES OF INSURANCE, MINIMUM LIMITS AND SPECIAL CONDITIONS

Note: All certificate(s) of insurance submitted pursuant to Contract Article 22.3. 3 must be accompanied by a Certification by Broker consistent with Part III below and include the following information:

- **For each insurance policy, the name and NAIC number of issuing company, number of policy, and effective dates;**
- **Policy limits consistent with the requirements listed below;**
- **Additional insureds or loss payees consistent with the requirements listed below; and**
- **The number assigned to the Contract by the City (in the "Description of Operations" field).**

Insurance indicated by a blackened box (■) or by X in a □ to left will be required under this contract

Types of Insurance (per Article 22 in its entirety, including listed paragraph)	Minimum Limits and Special Conditions
■ Commercial General Liability Art. 22.1.1	The minimum limits shall be $ 3,000,000 per occurrence and $ 6,000,000 per project aggregate applicable to this **Contract.** Additional Insureds: 1. City of New York, including its officials and employees, with coverage at least as broad as ISO Form CG 20 10 and CG 20 37, and 2. All person(s) or organization(s), if any, that Article 22.1.1(b) of the **Contract** requires to be named as Additional Insured(s), with coverage at least as broad as ISO Form CG 20 26. The Additional Insured endorsement shall either specify the entity's name, if known, or the entity's title (e.g., Project Manager), 3. The New York City Transit Authority (NYCTA), Manhattan and Bronx Surface Transit Operation Authority (MaBSTOA), Staten Island Rapid Transit Operation Authority (SIRTOA), Metropolitan Transportation Authority (MTA), its subsidiaries and affiliated companies. The Contractor shall furnish two (2) certificates of insurance to and the policy shall be endorsed to provide thirty (30) days advance notice to the Director, Risk Management, MTA Risk and Insurance Management Standards, Enforcement and Claims Unit, 2 Broadway, 21st Floor, New York, NY 10004, of any material change and/or cancellation. 4. New York State, including its officials and employees, 5. FHWA, including its officials and employees. 6. Consolidated Edison

■ Workers' Compensation Art. 22.1.2 ■ Disability Benefits Insurance Art. 22.1.2 ■ Employers' Liability Art. 22.1.2 ☐ Jones Act Art. 22.1.3 ☐ U.S. Longshoremen's and Harbor Workers Compensation Act Art. 22.1.3	Workers' Compensation, Employers' Liability, and Disability Benefits Insurance: Statutory per New York State law without regard to jurisdiction. **Note:** The following forms are acceptable: (1) New York State Workers' Compensation Board Form No. C-105.2, (2) State Insurance Fund Form No. U-26.3, (3) New York State Workers' Compensation Board Form No. DB-120.1 and (4) Request for WC/DB Exemption Form No. CE-200. The City will not accept an ACORD form as proof of Workers' Compensation or Disability Insurance. Jones Act and U.S. Longshoremen's and Harbor Workers' Compensation Act: Statutory per U.S. Law. ■ Additional Requirements: (1) NYCT "OUTSIDE CONTRACT" INSURANCE REQUIREMENTS: Workers' Compensation Insurance (including Employer's Liability Insurance) with limits of not less than $2,000,000, which limit may be met by a combination of primary and excess insurance meeting the statutory limits of New York State. (2) Two (2) certificates of such insurance shall be furnished to the Director, Risk Management, MTA Risk and Insurance Management Standards, Enforcement and Claims Unit, 2 Broadway, 21st Floor, New York, NY 10004.

☐ Builders' Risk	Art. 22.1.4	100 % of total value of **Work** **Contractor** the Named Insured; the **City** both an Additional Insured and one of the loss payees as its interests may appear. If the **Work** does not involve construction of a new building or gut renovation work, the **Contractor** may provide an installation floater in lieu of Builders Risk insurance. Note: Builders Risk Insurance may terminate upon **Substantial Completion** of the **Work** in its entirety.
■ Commercial Auto Liability	Art. 22.1.5	$ 2,000,000 per accident combined single limit If vehicles are used for transporting hazardous materials, the **Contractor** shall provide pollution liability broadened coverage for covered vehicles (endorsement CA 99 48) as well as proof of MCS 90 Additional Insureds: (1) City of New York, including its officials and employees, and (2) The New York City Transit Authority (NYCTA), Manhattan and Bronx Surface Transit Operation Authority (MaBSTOA), Staten Island Rapid Transit Operation Authority (SIRTOA), Metropolitan Transportation Authority (MTA), its subsidiaries and affiliated companies. (3) New York State, including its officials and employees, and, (4) FHWA, including its officials and employees.

☐ Contractors Pollution Liability Art. 22.1.6	$ 1,000,000 per occurrence $ 2,000,000 aggregate Additional Insureds: 1. City of New York, including its officials and employees, and 2. _____ 3. _____
☐ Marine Protection and Indemnity Art. 22.1.7(a)	$_____ each occurrence $_____ aggregate Additional Insureds: 1. City of New York, including its officials and employees, and 2. _____ 3. _____
☐ Hull and Machinery Insurance Art. 22.1.7(b)	$_____ per occurrence $_____ aggregate Additional Insureds: 1. City of New York, including its officials and employees, and 2. _____ 3. _____
☐ Marine Pollution Liability Art. 22.1.7(c)	$_____ per occurrence $_____ aggregate Additional Insureds: 1. City of New York, including its officials and employees, and 2. _____ 3. _____

[OTHER] Art. 22.1.8	
■ Railroad Protection Liability Policy (ISO-RIMA or equivalent form) approved by Permittor covering the work to be performed at the designated site and affording protection for damages arising out of bodily injury or death, physical damage to or destruction of property, including damage to the Insured's own property and conforming to the following: • Policy Endorsement CG 28 31 - Pollution Exclusion Amendment is required to be endorsed onto the policy when environmental-related work and/or exposures exist. • Indicate the Name and address of the Contractor to perform the work, the Contract # and the name of the railroad property where the work is being performed and the Agency Permit. • Evidence of Railroad Protective Liability Insurance, must be provided in the form of the Original Policy. A detailed Insurance Binder (ACORD or Manuscript Form) will be accepted pending issuance of the Original Policy, which must be provided within 30 days of the Binder Approval.	$ 2,000,000 per occurrence $ 6,000,000 annual aggregate Named Insureds: 1. New York City Transit Authority (NYCTA), the Manhattan and Bronx Surface Transit Operation Authority (MaBSTOA), the Staten Island Rapid Transit Operation Authority (SIRTOA), MTA Capital Construction Co., the Metropolitan Transportation Authority (MTA) including its subsidiaries and affiliates, and the City of New York (as Owner) and all other indemnified parties.

[OTHER] Art. 22.1.8

☐ Professional Liability

A. The Contractor's Professional Engineer shall maintain and submit evidence of Professional Liability Insurance in the minimum amount of $1,000,000 per claim. The policy or policies shall include an endorsement to cover the liability assumed by the Contractor under this Contract arising out of the negligent performance of professional services or caused by an error, omission or negligent act of the Contractor's Professional Engineer or anyone employed by the Contractor's Professional Engineer.

B. Claims-made policies will be accepted for Professional Liability Insurance. All such policies shall have an extended reporting period option or automatic coverage of not less than two (2) years. If available as an option, the Contractor's Professional Engineer shall purchase extended reporting period coverage effective on cancellation or termination of such insurance unless a new policy is secured with a retroactive date, including at least the last policy year.

[OTHER] Art. 22.1.8 ■ Engineer's Field Office **Section 6.40, Standard Highway Specifications**	Fire insurance, extended coverage and vandalism, malicious mischief and burglary, and theft insurance coverage in the amount of $40,000

[OTHER] Art. 22.1.8

☐The Following Additional Insurance Must Be Provided:

Umbrella/Excess Liability Insurance - The Contractor shall provide Umbrella/Excess Liability Insurance in the minimum amount of $10,000,000 per Occurrence and $10,000,000 in Aggregate. The policy terms and condition should be at least as broad as the underlying policies. The underlying policies should comply with the insurance provision as outlined by the contract. Defense cost should be in addition to the limit of liability. The City of New York, including its officials and employees, should be included as additional insured as respects to the noted project.

SCHEDULE A
(GENERAL CONDITIONS TO CONSTRUCTION CONTRACT)
(GENERAL CONDITIONS RELATING TO ARTICLE 22 – INSURANCE)

PART III. CERTIFICATES OF INSURANCE

All certificates of insurance (except certificates of insurance solely evidencing Workers' Compensation Insurance, Employer's Liability Insurance, and/or Disability Benefits Insurance) must be accompanied by one of the following:

(1) the Certification by Insurance Broker or Agent on the following page setting forth the required information and signatures;

-- OR --

(2) copies of all policies as certified by an authorized representative of the issuing insurance carrier that are referenced in such certificate of insurance. If any policy is not available at the time of submission, certified binders may be submitted until such time as the policy is available, at which time a certified copy of the policy shall be submitted.

CERTIFICATION BY INSURANCE BROKER OR AGENT

The undersigned insurance broker represents to the City of New York that the attached Certificate of Insurance is accurate in all material respects.

_____
[Name of broker or agent (typewritten)]

_____
[Address of broker or agent (typewritten)]

_____
[Email address of broker or agent (typewritten)]

_____
[Phone number/Fax number of broker or agent (typewritten)]

_____
[Signature of authorized official, broker, or agent]

_____
[Name and title of authorized official, broker, or agent (typewritten)]

State of .....)
) ss.:
County of .....)

Sworn to before me this _____ day of _____, 20____

_____
NOTARY PUBLIC FOR THE STATE OF _____

SCHEDULE A

(GENERAL CONDITIONS TO CONSTRUCTION CONTRACT)

PART IV. ADDRESS OF COMMISSIONER

Wherever reference is made in Article 7 or Article 22 to documents to be sent to the **Commissioner** (e.g., notices, filings, or submissions), such documents shall be sent to the address set forth below or, in the absence of such address, to the **Commissioner's** address as provided elsewhere in this **Contract**.

DDC Director, Insurance Risk Manager

30 – 30 Thomson Avenue, 4th Floor (IDCNY Building)

Long Island City, NY 11101

(NO TEXT ON THIS PAGE)

R - PAGES

REVISIONS TO STANDARD SPECIFICATIONS

NOTICE

The Specification Bulletin(s) ("SB(s)") contained in this Section (R-Pages) may consist of revisions to the following Standard Specifications:

- New York City Department of Transportation ("NYC DOT") Standard Highway Specifications, dated 8/1/2015;
- New York City Department of Environmental Protection ("NYC DEP") Standard Sewer and Water Main Specifications, dated 7/1/2014; and
- NYC DEP Specifications for Trunk Main Work, dated 7/2014.

The SB(s) modify and supersede portions of the applicable Standard Specifications. The provisions contained in this Contract's I-Pages, S-Pages and SW-Pages may further modify the applicable Standard Specifications.

The following SB(s) are included as part of this contract:

- SB 16-001 - REVISIONS TO THE NYC DOT STANDARD HIGHWAY SPECIFICATIONS.

(NO TEXT ON THIS PAGE)

NYC DDC Department of Design and Construction	SPECIFICATION BULLETIN	SB 16-001

Title: **REVISIONS TO NYC DOT STANDARD HIGHWAY SPECIFICATIONS**

Prepared:	Approved:
6/29/2016	6/29/2016
Richard Jones, P.E. CWI Date	Mohsen Zargarelahi, P.E. Date
Director, Specifications – Infrastructure Design	Assistant Commissioner – Infrastructure Design

APPLICABILITY:

- This Specification Bulletin (SB) is effective for projects advertised on or after 7/11/16.

SUPERSEDENCE:

- This SB supersedes the following SBs: **NONE**

REVISIONS TO THE NEW YORK CITY DEPARTMENT OF TRANSPORTATION STANDARD HIGHWAY SPECIFICATIONS VOLUME 1 OF 2, DATED 8/1/15:

All references contained below are to the New York City Department of Transportation Standard Highway Specifications, Dated August 1, 2015. Said Standard Highway Specifications are hereby revised as follows:

a) Refer to Page 3, Subsection 1.06.3;
Delete the third paragraph;
Substitute the following new paragraph:
"Any doubt as to the meaning of this contract or the specifications thereof, or any obscurity as to the wording of them, or any discrepancy between them, or any discrepancy between figures and drawings will be explained by the Engineer."

b) Refer to Page 5, Subsection 1.06.8;
Delete the words "tentative" wherever it occurs in the last paragraph.

c) Refer to Page 17, Subsection 1.06.23.(G), last paragraph;
Delete the word "asbestos" wherever it occurs.

d) Refer to Page 26, Subsection 1.06.29, line number four (4);
Delete the words and punctuation mark ", and at the prices fixed herein" in its entirety.

e) Refer to Page 41 Subsection 1.06.48.(C), 2nd paragraph, 1st line;
Delete from the first line starting from "have maximum grade of one (1) vertical on three (3) horizontal", in its entirety;
Substitute the following:
"have a maximum grade of one (1) vertical on twelve (12) horizontal, for pedestrian ramp and one (1) vertical on six (6) horizontal, for driveway ramp".

f) Refer to Page 87, Subsection 2.18.3(A), 4th paragraph;
Change "." to "," after "... and Appeals";
Add the following words: "and the health standards of OSHA of the U.S. Department of Labor."

g) Refer to Page 104, Subsection 3.01.3.(C).1.(c), 4th paragraph:
Delete the words "to a maximum of 70%"

h) Refer to Page 120, Subsection 3.05.5.(A), 2nd Table 3.05-V;
Delete the sentence: "Concrete of Type IA, IIA and IIIA shall have an air entrainment of 4 to 7 percent when the coarse aggregate is 1 1/2" stone and 5 to 7 percent when the coarse aggregate is 3/4" stone, with 6.5 percent desired in either case."
Substitute the following:
"Concrete of classes shown in Table 3.05-II shall have an air entrainment of 4 to 7 percent for size 357 coarse aggregate and 5 to 7 percent for size 67 or 57 aggregate, with 6.5 percent desired in either case. If concrete is pumped, air entrainment shall be measured after the pump."

i) Refer to Page 135, Subsection 3.05.9, 4th paragraph;
Add the following words to the end of the 4th paragraph: "Dosing of accelerators and retarders shall be per the manufacturer's published recommendations. Addition of an accelerator or retarder per this subsection will not require a separate mix design, unless requested by the Engineer."

j) Refer to Page 192, Subsection 4.06.12;
Delete the Subsection 4.06.12, in its entirety and substitute the words "4.06.12. (NO TEXT)." The use of rubble aggregate will not be permitted.

k) Refer to Page 282, Subsection 5.02.2.(C), 2nd paragraph;
Add the following words: "6 in x 12 in" after "At least four (4)"

I) Refer to Page 282, Subsection 5.02.2.(C), 2nd paragraph;
Delete the sentence: "Curing boxes shall be furnished in good operating condition, capable of maintaining cylinders under water at a curing temperature of 72°F. ±5°F."
Substitute the following:
"Curing boxes meeting the requirements of ASTM C31 and C511 shall be furnished in good operating condition, and shall maintain cylinders under water at a curing temperature of 73.5°F ±3.5°F. Curing boxes with rusted or corroded interior surfaces shall not be used."

REVISIONS TO THE NEW YORK CITY DEPARTMENT OF TRANSPORTATION STANDARD HIGHWAY SPECIFICATIONS VOLUME 2 OF 2, DATED 8/1/15:

No Changes.

(NO TEXT THIS PAGE)

I - PAGES

NEW SECTIONS

NOTICE

THE PAGES CONTAINED HEREIN ARE NEW SECTION OF WORK THAT SHALL APPLY TO AND BECOME A PART OF THE CONTRACT.

UNLESS OTHERWISE SPECIFIED, ALL SECTIONS, SUBSECTIONS, ARTICLES, AND SUBARTICLES AS REFERRED TO HEREIN (I-PAGES) ARE TO THE NEW YORK CITY DEPARTMENT OF TRANSPORTATION'S (NYCDOT'S) STANDARD HIGHWAY SPECIFICATIONS, DATED AUGUST 1, 2015, AS CURRENTLY AMENDED BY THE R-PAGES.

(NO TEXT ON THIS PAGE)

TABLE OF CONTENTS

SECTION	DESCRIPTION	PAGE NO.
4.06 SC	SELF-CONSOLIDATING CONCRETE IN STRUCTURES	I-1
6.52 FED	UNIFORMED FLAGPERSON	I-4
637.9520	FIELD INFORMATION MANAGEMENT SYSTEM	I-6
8.08 VMS	VARIABLE MESSAGE SIGN	I-9
8.32	BARK CHIP MULCH	I-17
9.07	NON-WOVEN GEOTEXTILE, WEED BARRIER AND ROOT BARRIER	I-18
NYC-665.16000011	FURNISH AND INSTALL BOLLARDS	I-22

(NO TEXT ON THIS PAGE)

SECTION 4.06 SC
Self-Consolidating Concrete in Structures

4.06SC.1. INTENT. This section describes Self-Consolidating Concrete in Structures.

4.06SC.2. DESCRIPTION. Self-Consolidating Concrete in Structures under this section shall refer to all concrete used in the median wall structure. Finish, color and design shall be as specified. The concrete shall be a highly workable concrete that can flow through densely reinforced or complex structural elements under its own weight and adequately fill voids without segregation or excessive bleeding without the need for vibration.

4.06SC.3. MATERIALS. All materials shall comply with the requirements of **Subsection 4.06.3** in the NYCDOT Standard Highway Specifications, with the following modifications and additions:

(A) Concrete for deposit as a concrete structure shall be a Class A-40 concrete in compliance with the requirements of **Section 3.05** in the Standard Highway Specifications, with the following modifications:

(1) Concrete shall be a Self-Consolidating Concrete (SCC) with a minimum compressive strength of not less than 4,000 psi at 28 days as determined by not less than three (3) cylinders. Air-entrainment shall be from 4 to 7 percent, with 6.5 percent desired.

(2) Portland Cement: ASTM C150, Type II.

(3) Aggregates:

Fine Aggregates shall be sand – Type 1A, complying with the requirements of **Section 2.21, Fine Aggregate – Sand (For Asphalt, Concrete, Mortar and Plaster)** in the NYCDOT Standard Highway Specifications.

Coarse aggregate – Type 1, Grade B, or Type 2, Size No. 67, comply with the requirements of **Section 2.02, Aggregates Coarse (Broken stone and Gravel)** in the NYCDOT Standard Highway Specifications.

(4) Admixtures: Furnish from one manufacturer, except for the Viscosity Modifier Admixture (VMA) which may be furnished from another manufacturer provided it is compatible with all other admixtures.

a. Characteristics: Compatible with each other and free of intentionally added chlorides.

b. Air Entraining shall comply with the requirements of **Subsection 2.09.3 (A), Admixtures** in the NYCDOT Standard Highway Specifications and shall be added at the time concrete ingredients are mixed with water.

c. High-Range Water-Reducing Admixture shall conform to ASTM C 494, Type F.

d. Accelerating Admixture shall comply with the requirements of ASTM C 494, Type C or E.

e. VMA shall comply with the requirements of ASTM C 494, Type S.

f. Other admixtures shall be as approved by the Engineer.

(5) Supplementary Cementing Materials:

a. The substitution of supplementary cementitious materials for cement shall be made on the basis of weight, except for Silica Fume which shall be an addition not substitution.
b. Fly Ash shall conform to ASTM C 618, Class F.
c. Ground Granulated Blast-Furnace Slag (GGBFS) shall conform to ASTM C989
d. Silica Fume shall conform to ASTM C 1240.

(B) Mixture Specifications:

(1) Water-to-cementitious materials ratio shall not exceed 0.50 by weight.

(2) Supplemental Cementitious Materials (SCM): Concrete mixture shall meet ACI 318 requirements for concrete exposed to deicing chemicals. Fly ash or GGBFS shall not exceed 25% of the weight of the total cementitious materials. Silica Fume shall range from 8% to 15% by weight of cement as an addition to and not a replacement for cement.

(C) Spread:

(1) Spread shall be measured per ASTM C1611.

(2) The design spread of the SCC mixture shall be established by the Engineer.

(3) The spread of SCC used on the project shall be the design slump flow plus or minus two (2") inches.

(D) Visual Stability Index (VSI): VSI Rating shall not exceed 1, per ASTM C1611.

(E) Before the Contractor begins to manufacture concrete, he shall secure the Engineer's approval of the mix design he proposes to use for the SCC.

(1) Proportion mixture according to project specific criteria (Compressive Strength, Air Content, spread and VSI.

4.06SC.4. METHOD. All work shall be done in accordance with the applicable requirements of **Subsections 4.06.4** through **4.06.11** in the NYCDOT Standard Highway Specifications, excluding **Subsection 4.06.7.(D), COMPACTING CONCRETE**.

4.06SC.5. MEASUREMENT. In determining the volume of concrete in cubic yards to be paid for, deductions will be made for the spaces occupied by pile heads, timbers and drains. Deductions will not be made for the spaces occupied by steel reinforcement, structural steel or water-proofing. Other deductions will or will not be made, as specified.

The measured volume of concrete will be adjusted for payment in accordance with the strength requirements under **Section 5.04** of the Standard Highway Specifications.

4.06SC.6. PRICES TO COVER. The contract price per cubic yard for Self-Consolidating Concrete in Structures, measured in place, shall cover the cost of all labor, materials, equipment, insurance, and incidentals required to furnish and construct the concrete structure complete in full compliance with the requirements of the specifications, exclusive of steel reinforcement, and to furnish such samples for testing and to provide such testing equipment, laboratory space and facilities as may be required.

Payment will be made under:

Item No.	Item	Pay Unit
4.06 SC	SELF-CONSOLIDATING CONCRETE IN STRUCTURES	C.Y.

SECTION 6.52 FED
Uniformed Flagperson

6.52FED.1. INTENT. This section describes the employment of uniformed flagpersons to direct and detour traffic.

6.52FED.2. DESCRIPTION. The Contractor shall furnish an adequate number of flagpersons to control vehicular and pedestrian traffic when it is necessary to maintain alternating one-way traffic in one lane of a two-way roadway, and at all other locations where construction operations, construction vehicles and equipment, and temporary traffic patterns related to the construction operations require positive temporary traffic control for safe, efficient traffic operations.

6.52FED.3. METHODS. All flagpersons shall be proficient in speaking, writing and reading English, and adequately trained in flagging operations by a recognized training program such as that provided by the American Traffic Safety Services Association, the National Safety Council, unions or construction industry associations, or by an individual who holds a current certification as a flagger training instructor from such a program.

All flagpersons, their apparel, hand-signaling devices, active two-way radios, and procedures to be used by them shall be in compliance with the requirements of Chapter 6E. FLAGGER CONTROL, in the Federal "Manual on Uniform Traffic Control Devices for Streets and Highways" 2009 Edition, or later edition.

Prior to the start of flagging operations, the Contractor shall provide to the Engineer a list of certified flagpersons to be used in the contract, identifying the source of flagger training for each individual. When requested by the Engineer, flagpersons shall demonstrate their competency in flagging procedures. Flagpersons not competent in flagging procedures to the satisfaction of the Engineer shall be retrained or replaced at once.

Flagpersons are to be paid not less than the most recent prevailing wages rates established for Laborers as set by the NYC Comptroller or the US Department of Labor, whichever is higher at the time the work is being performed.

The Contractor will be given a minimum of 12 hours advanced notice by the Engineer as to when to furnish a flagperson.

6.52FED.4. METHOD OF MEASUREMENT. The fixed price lump sum shown in the bid proposal for this item shall be considered the price bid, although actual payment will be based on the authorized work performed by the Uniformed Flagpersons. The fixed sum is not to be altered in any manner by the bidder.

It is agreed that the quantity to be measured for payment shall be the number of person-hours of uniformed flagperson service actually performed, as authorized by the Engineer.

Laborers who are not uniformed flagperson will not be measured for payment as flagperson under this item.

6.52FED.5. BASIS OF PAYMENT. The Contract price for this item shall be a lump sum price for the work performed under this item and shall be equal to the total sum of the amount of wages paid for all authorized Uniformed Flagpersons performing vehicular and pedestrian traffic management, with a twelve (12%) percent markup for Overhead, except that no percentage for overhead will be allowed on Payroll Taxes or on the premium portion of overtime pay or on sales and personal property taxes; plus ten (10%) as compensation for Profit, except that no percentage for profit will be allowed on Payroll Taxes or on the premium portion of overtime pay or on sales and personal property taxes; as described in Article 26 of the Standard Construction Contract.

Overhead shall include without limitation, all costs and expenses in connection with administration, management superintendence, and all material costs for their apparel, hand-signaling devices, active two-way radios, and any other equipment required, and insurance required by Schedule A of the General Conditions other than Workers' Compenstation Insurance.
The hourly rate per person-hour shall be the prevailing wage rate for Laborers in effect at the time of the work to control and detour traffic, as shown on the Contract Drawings or as directed by the Engineer.

The Contactor shall be required to submit to the Engineer satisfactory evidence of payment on a New York State certified payroll report forms. No retainage will be withheld by the Department on such payments made under this section.

The total estimated cost of this item is the "fixed sum" amount shown for this item in the Bid Schedule. No guarantee is given that the actual total cost for this item will in fact be the "fixed sum" amount. The "fixed sum" amount is included in the total bid solely to insure that sufficient monies will be available to pay the Contractor for these services.

The "fixed sum" is for bidding purposes only and shall not be varied in the bid. The Contractor will be paid for the actual amount regardless of the fixed sum, which may be more or less than the fixed sum amount.

The Contractor shall maintain separate books of accounts and shall not charge any portion of the cost of wages for Uniformed Flagpersons to another part of the work. Payment and partial payments under this item shall be treated separately from the rest of the contract items.

The New York State certified payroll report forms shall be submitted to the Engineer on a monthly basis and shall include the signed copies of the daily report.

Payment will be made under:

Item No.	Item	Pay Unit
6.52 FED	UNIFORMED FLAGPERSON	FIXED SUM

ITEM 637.95 20 – FIELD INFORMATION MANAGEMENT SYSTEM

DESCRIPTION:
This work shall consist of providing a fully operational field information collection and management system and support services.

MATERIALS:
The field information management system shall include all the components, and adhere to, the specifications in Attachment A attached to this specification.

The Contractor is required to have the vendor of the field information management system on call for support services for the duration of the contract.

CONSTRUCTION DETAILS:
The Contractor shall provide and maintain a field information management system with access made available to parties as designated by the Engineer. The Contractor shall make the system fully operational, including training, prior to the project first working day.

The system shall be maintained and remain in service until either: (a) the Engineer requests its removal in writing, (b) the NYCDOT relinquishes the Engineer's field office and the field information management system is relinquished as part of the Engineer's field office, or (c) the later of either thirty (30) days after the final contract acceptance date or thirty (30) days after the date the Contractor provided the last documentation necessary for processing the final contract acceptance.

Ownership of the software supplied by the Contractor shall remain the property of New York City Department of Transportation (NYCDOT). All data is the property of NYCDOT and shall be provided in a useable format at the completion of the contract.

The Contractor shall maintain the information management system vendor account in good standing to prevent service interruptions for the duration of the project.

METHOD OF MEASUREMENT:
The field information management system will be measured on a fixed price Dollar Cents pay unit basis.

BASIS OF PAYMENT:
The pay item is a 'draw down' item. As materials are supplied, the receipts for the materials shall be submitted to the Engineer (Note: 'materials' includes all software, software customizations, labor, services, and service contracts provided to furnish and maintain all of the components of the system). The Contractor will be reimbursed for receipted costs of materials plus five percent (5%) for profit and overhead.

The total cost shown in the itemized proposal for this pay item will be considered the price bid even though payment will be made only for actual materials supplied, with profit and overhead. The unit price amount is not to be altered in any manner by the bidder. Should the bidder alter the amount shown, the altered figure will be disregarded, and the original price will be used to determine the total amount bid for the contract.

ITEM 637.95 20 – FIELD INFORMATION MANAGEMENT SYSTEM

ATTACHMENT A

This pay item shall include supplying a cloud based field information management system with the following capabilities.

ACCESS

- Accessible from any internet connected desktop and laptop through a vendor supported browser
- Accessible from vendor supported mobile tablets (ex. Apple iPAD)

SYSTEM FUNCTIONALITY

The system will provide the following functionality in real time to all authorized users:

- Field Recording
    - Work Report (Inspector Reports) progress tracking quantity, labor, equipment, field sketches, forms, etc.
    - Engineer Reports (EIC Journals) with automatically integrated Work Reports
    - Punch List Issue tracking with Ball In Court, Priority and Due Date assignment
- Cost Control
    - Generate Payment Estimate (Progress Payment) with thresholds to warn Engineer of the following payment scenarios: Quantity Over Authorized Quantity, Quantity Over Material Acceptance Restriction, Charge to Contractor Recorded, Force Account Estimate limit, Field Change Payment Recorded, Major Item Over Run, Minor Item Over Run and Material Partial Payment Recorded
    - Material Acceptance Tracking Module
    - Material Partial Payment (MOH/Stockpile) Module
    - Contract Change Order Module
    - Field Change Payment Tracking
    - DBE Tracking
    - Retainage Tracking
    - Provide electronic data input into NYSDOT CEES system
    - Project Close Out Milestone tracking and CEES based Close Out Reports
    - CEES based Reporting Module
- Document Control (all with Ball in Court, Priority, Due Date and electronic notifications for electronic communication between project participants)
    - Request For Information (RFI) Module
    - Submittal Module
    - Submittal Package Module
    - Transmittal Module
    - Meeting Minutes Module
    - Messages Module
    - File Cabinet for storage of (Photos, Videos, Forms, Contract Documents, Specifications and all project files)
        - Ability to electronically load files into File Cabinet via upload and/or email into from web based email systems
    - Plan Module. (Ability to view, organize and submit/approve original & marked up plans)

- Scheduling
    - Display current approved CMP schedule

ITEM 637.95 20 – FIELD INFORMATION MANAGEMENT SYSTEM

    - Ability to record activities against CPM schedule
    - Ability to export actual activities used information into Scheduling Software
- Archive. Provide automated conversion of Project records into text selectable PDF files organized into standard folder structure for storage and/or printing
- Provide continual (when and wherever wireless service is reasonably available) two-way synchronization between all components of the system
    - Provide offline option for vendor approved mobile device
- Integrated Search Module
- Support/Help Module

DATA REQUIREMENTS

The following information is required for Project Set Up

- Searchable Contract Plans and Proposal
- Searchable Standard Specifications
- Searchable common Data Resources (MURK Manuals, Standard Sheets, Engineering Instructions, etc.)
- Initial CPM Schedule
- Field User Forms

DATA STORAGE /TRANSFER

- Data shall be stored and maintained on a cloud based server with regular secondary location backups
- Continual access to system shall be available from the office and field office shall be provided (via internet)
- Raw data will be made available to NYCDOT through provided API
- All data shall be transferred to NYCDOT in a useable electronic format at the end of the contract

MAINTENANCE /SERVICE

- Any as-needed maintenance/service/upgrades shall be provided in a timely manner
- Software is able to be customized for NYCDOT direction

TRAINING

- In-person training on the use of the systems shall be provided
- Continuous help call support also shall be available for the duration of the contract
- Training and support services shall be performed by a qualified representative from the field information management system vendor

SECTION 8.08 VMS
Variable Message Signs

8.08VMS.1. DESCRIPTION:

This work item involves the furnishing, installation, and maintenance of Portable Variable Message Signs (VMS) at specified locations shown on the plans and/or as ordered by the Engineer. The display units are intended to provide motorist information from a roadside installation and shall be configured for long term operation.

8.08VMS.2. MATERIALS:

The Contractor shall provide the following items as subsequently described in these specifications. All necessary incidental components, cables, and hardware, shall be supplied to accomplish a fully operational Portable VMS installation. All equipment and components furnished shall be new and be of the latest design manufacture. All parts shall be of high quality workmanship, and no part or attachment shall be substituted or applied contrary to the manufacturer's recommendations and standard practices. The design life of all components, operating 24 hours per day, shall be ten (10) years minimum with the exception of lead acid batteries.

A. Display

Variable message display units shall meet the requirements of Sections 201.3 and 294.6 of the New York State Manual of Uniform Traffic Control Devices. Each unit shall have a three line display with minimum of eight discrete characters per line. The sign characters shall measure at least 450 mm (18-in.) high, by 270 mm (11-in.) wide. The sign case shall not exceed 3.7 meters (12 ft.) wide. The display panel shall be 100% solid state with no moving parts or switches. All panels shall be identical and mutually interchangeable with all other panels. No field hardware or programming modifications shall be required to exchange or replace individual display panels.

LEDs shall be ITE amber wide angle providing for both daylight and nighttime legibility at a viewing angle of 30 degrees. Each pixel shall be capable of producing 20 candelas of light at 30 ma of current, shall be rated for 100,000 hours service life and shall have an operating temperature of -9 degrees C (15 degrees F) to +74 degrees C (165 degrees F).

B. Power Supply

The 12 VDC power source system shall consist of at least fourteen (14) batteries. Each battery shall be of the deep cycle design and shall operate at 12 VDC. The batteries shall be charged primarily by a solar voltaic array. Each battery shall have a minimum rating of 1,300 cold cranking amps for 30 seconds at -18 degrees C (65 degrees F) and shall have at least a 390 minute reserve capacity with 50% of pixels illuminated. The design of the VMS shall insure that this capacity shall be sufficient to provide virtual autonomy for the sign system which will allow full messages to be continuously displayed without the use of an external charger.

Control of the sign power supply shall be provided by a power management system that shall regulate the charging of the batteries by the solar charging system and shall provide for regulation, and distribution of the power to the various sign functions. This power management system shall provide power to the batteries when required and shall not overcharge them when they have reached a full charge.

C. Solar Charging System

The Solar charging system shall consist of a photovoltaic array mounted at the top of the sign case and power management system. The system shall provide regulated "on demand" charging consistent with the battery condition, with the ambient solar luminance at the photovoltaic array, and with net power consumption

within the sign system. The photovoltaic array shall be capable of delivering 450 Watts of power in direct sunlight.

D. 110 VAC Charging system

A 110 VAC charging system shall be incorporated. The sign charging system shall be capable of producing a minimum seventy-five (75) amperes, twelve volt (12) VDC output. This charger shall be available as a backup and may be utilized when 110 VAC service is available at the site. A current meter for monitoring the charging process and an electrical receptacle mounted on the control pedestal shall be included. The system shall be capable of completely charging the battery pack within 24 hours. The actual charging time will vary depending upon conditions and state of charge/discharge of the batteries. Battery voltage shall be monitored by an on board CPU and the presence of 110 VAC line voltage shall be indicated on the keyboard terminal LCD.

E. Power Manager

The power manager shall control the regulation, and distribution of the power to the sign system. In addition, it shall regulate the solar charging of the 12 VDC batteries. The power manager shall automatically disconnect the battery pack from the solar array when the batteries attain a fully charged state. When the sign system is consuming power and the batteries are discharging, the power manager shall enable the solar arrays to provide a full charge from the solar array. This operation shall be designed to insure a maximum charge on the batteries when the sign is in full operation without overcharging the battery supply. The power manager circuitry shall be fully functional in the 0 to 95 % non-condensing humidity range and in the temperature range of -35 degrees C (-30 degrees F) to +75 degrees C (165 degrees F).

F. Central Processing Unit (CPU)

The CPU shall consist of one or more printed circuit (PC) board(s) which shall contain all of the sign message memory as well as the sign operating software. The CPU shall be constructed of a high quality fiberglass printed circuit card conformal coated with 100% solid-state circuitry. The CPU shall operate in 0 to 95 % non-condensing humidity conditions at temperatures from -35 degrees C (-30 degrees F) to +75 degrees C (165 degrees F). The CPU PC board shall be designed with reverse polarity protection in the event that batteries are incorrectly connected. The CPU shall have sufficient capacity to store 200 messages that can be entered from the sign keyboard terminal or remotely via a RS232 port. Remote control shall be possible over the RS232C control port. The data rate of this channel shall support operation in the 1.2 KB to 9.6 KB rate. The CPU shall include full support for the RS232 port and shall contain all required software and hardware which is necessary for a communication address to be stored in non-volatile RAM. The integral communication software on the CPU shall be able to recognize its own address in received messages and shall reject all other addresses. The RS232 hardware and software shall be capable of operation with all of the types of communication modems (i.e.: CDPD, Spread-spectrum, CDMA and Cellular).

The RS232 channel shall permit the programming, uploading and downloading of all necessary data to permit 100 % remote functionality of the sign. Message memory shall be retained during power interruptions or failures of indefinite length and the CPU shall be capable of operating the sign system in the event that the keyboard controller is disconnected. The units shall be capable of displaying up to six messages in a cyclical sequence and shall be capable of creating a minimum of 25 program sequences.

The complete RS232 protocol utilized shall be fully documented and provided to the Engineer. This protocol description shall be utilized by a third party for the purpose of developing control software for the VMS. The protocol shall include functions which shall allow the selection of pre-programmed messages, upload/download of the sign message library, and control of all auxiliary functions, such as LED messages. In addition, the protocol shall include functions to retrieve sign status such as current messages, failure states, etc.

The protocol shall be provided without any license restrictions or non-disclosure requirements. The manufacturer shall provide a minimum of sixteen hours telephone consultation to any party designated by the Engineer, to a software engineer who is fully cognizant and knowledgeable in all aspects of the protocol use and application.

G. VMSs shall be NTCIP Compliance

Profile Layer Applicable NTCIP Standards

Information Profile NTCIP 1201 (Global Object Definitions)
NTCIP 1203 (DMS Object Definitions)
Application Profile NTCIP 2301 (Simple Transportation Management Framework [STMF])
Transport Profile NTCIP 2201 (Transportation TransportProfile)
NTCIP 2202 (TCP/UDP/IP) Subnetwork Profile NTCIP 2101 (Point to MultiPoint over RS232)
NTCIP 2102 (Point to MultiPoint over FSK Modem)
NTCIP 2103 (Point to Point)
NTCIP 2104 (Ethernet)

H. Sign Keyboard Terminal

The sign keyboard shall be conveniently located for easy access and control of the display while the sign is in operation. The keyboard terminal shall consist of a standard QWERTY keyboard and at least a 4 line by 20 characters per line display. This terminal shall be watertight and shall be manufactured with conformal coated circuit boards. The keyboard shall operate in the 0 to 95 % non-condensing humidity conditions and -35 degrees C to +75 degrees C temperature range.

I. Sign Operation Software

The sign operating software (SOS) shall provide for operator interaction with the sign system through software residing in the CPU unit. This software shall be accessible through the sign keyboard terminal and an RS232 control port as described in Subsection F, above. The local software shall be user friendly (Capable of being operated by typical contractor personnel) and shall require operator confirmation prior to allowing a change to any sign operating parameter or message. The sign operating software shall contain a password entry system and limit access to the sign to authorized persons. The sign operating software shall provide for the following additional capabilities:

- Remote and local control of LED brightness (minimum 7 levels).
- Automatic (based on local photocell measurements) control of LED brightness.
- Enable/Disable cellular and CDPD and CDMA communications.
- Sign status including battery post voltage, 110 VAC service indicator, low voltage indicator, and photocell ambient light level.
- Accurate internal clock with automatic daylight savings time adjustment and no fail millennium change.

The following sign editing features shall be programmable:

- Create, edit, review, and delete messages.
- Create, edit, review, and delete message schedule.
- Create, edit, review, and delete message sequences.
- Programmable flash rate for messages.

J. Sign Operation Desktop, CDMA modem and Antenna and installation and integration in NYCDOT's Traffic Management Center (TMC)

Contractor shall provide a Personal computer P4 with the latest version of attached specifications, CDMA modem, and antenna installation at the NYCDOT Traffic Management Center (TMC), 28-11 Queens Plaza North, with the antenna installed on 9th floor roof.

Install and integrate all systems including communication with VMSs from TMC.

K. Sign Operation Notebook (laptop)

Contractor shall provide a laptop with the latest version of attached specifications and diagnostic software.

L. Trailer

The trailer shall be designed to safely transport the VMS assembly. The vehicle shall come equipped with all necessary lights, fenders, reflectors, etc. for use on public highways in accordance with the NYS Vehicle and Traffic Law. The trailer shall have a single axle and a fixed height tow ring and adjustable height ball or tow ring hitches. The trailer shall come equipped with leveling jacks of adequate strength to conveniently adjust the trailer orientation. These leveling jacks shall be affixed in such a manner that they may be readily placed and locked in a horizontal position for traveling without necessitating the use of tools. The trailer and sign assembly, when stationary and supported properly with the leveling jacks, shall withstand AASHTO rated 160 KPH wind gusts. The trailer shall be equipped with a rain tight locked housing for the keyboard, terminal and control panel. The sign trailer shall not exceed 2.4 meters (8 ft.) wide.

M. PC Based Remote Operation Software

A PC Based software package shall be supplied with each assembly. The package shall be supplied with an install disk and operating manual. From a standard PC, the software shall allow the VMS to be fully controlled, programmed, and maintained. The software package shall comply with the following specifications:

- Programmable for operation on COM1, COM2, COM3, + COM4 utilizing standard IRQs. In addition IRQ5 must be supported for COM3 and COM4. Two USB ports.
- Software must be operational under WINDOWS 98, WINDOWS XP.
- Must support as a minimum of functions available on the local CRT and terminal as defined in Subsection H, above.
- Must support dial-up modem operation including ability to maintain a telephone library for each VMS. Program must support a minimum of 100 VMS.
- Must support a sign message library which can be uploaded/download from the PC. Commands must be available to selectively upload/download complete messages from the VMS and a mechanism to store them on disk.
- PC software must be functional with all types of communication adapters utilized for the project.
- A PC 9-PIN to VMS controller RS232 connection cable shall be supplied for each VMS supplied. The cable shall be a minimum of 4 meters (13'-2") long and shall utilize water resistant connections and be of heavy-duty construction.

N. Modem Interface Cable

The VMS shall be supplied with a modem interface cable. This cable shall be designed to connect the VMS controller's RS232 port to the spread spectrum radio modem indicated on the plans to be utilized at this assembly.

O. Auxiliary Equipment Bay

The VMS shall have space for the installation of the external devices designated for use with the VMS in this contract. In addition, access to AC power shall be available in this bay. The bay shall be protected and secured by a lock and shall be watertight. Other internal spaces of the VMS can be utilized for this purpose if sufficient space exists.

P. MC Power Cable, Flexible Conduit

A nominal 3 meter (10 ft.) length of MC power cable and appropriate mating connectors, containing two (2) stranded # 8 wires and a ground shall be furnished and installed between the Pole Mounted Control Equipment Cabinet, power distribution panel and the Auxiliary Equipment Bay of the VMS sign. This cable shall be used to power the portable VMS sign from commercial electrical power.

Q. 3/4 NPS Sealtight Flexible Conduit

A nominal 3 meter (10 ft.) length of 3/4 NPS sealtight flexible watertight conduit and appropriate mating connectors shall be furnished and installed between the Pole Mounted Control Equipment Cabinet and the Auxiliary Equipment Bay of the VMS sign. The Contractor shall install the modem Interface Cable as described in Subsection N, above, in this flexible conduit.

8.08VMS.3. CONSTRUCTION MAINTENANCE DETAILS:

The Contractor shall prepare a shop drawing submittal which will include copies of descriptive literature for every component to be included in with the VMS assembly. The submittal shall include a complete description of the VMS protocol utilized to command and program the VMS assembly. In addition, the submittal shall include a complete plan for the VMS including all interconnections and physical placement of all of the required major and incidental components. These drawings shall include specific details of the installation of all of the material listed in this specification and as shown on the construction plans and details.

Upon request, as part of the shop drawing process, the Contractor may be required to perform a field demonstration of the assembly at a particular site which would be selected to approximate the conditions under which the VMS will need to operate for the project. During this demonstration, the unit must prove that it can meet all of the functional requirements defined in this specification. The Engineer has the right to reject the material if the demonstration fails to prove that the device is compliant, in the opinion of the Engineer. The shop drawing submittal must be as approved by the Engineer prior to any testing or installation of the VMS in the field.

The spread spectrum radio CDMA and power supply, as indicated on the plans or as designated by the Engineer, shall be installed, activated, and tested. The antenna cable shall be installed through the 2 NPS chase nipple in the back of the cabinet and at the top of the pole through the new opening with the rubber grommet as detailed in the plan set. The YAGI antenna detailed for in the Spread Spectrum Radio CDMA specification shall be installed utilizing the antenna mounting bracket described in that specification. The YAGI antenna shall be installed at the highest point possible on the sign/pole. Details for alignment of this antenna can be found in the CDMA Spread Spectrum radio specifications.

The VMS is to be installed at the locations indicated on the plans or as directed by the Engineer. The trailer wheels shall be removed and the VMS shall be positioned to maximize the viewing angle and visibility to the roadway. When in use, the units shall be set as shown on the construction plans and details. The base of the message display panel shall be adjusted so that it is at least two (2) meters (6-1/2 feet) above the pavement surface and properly aligned to provide optimum viewing by approaching motorists.

At locations where solar charging of batteries is not possible, a 110 VAC charging system shall be used to keep the batteries charged. At such locations, the Contractor shall be required to connect all installed VMSs to the nearest street light pole by overhang power cable in accordance with the National Electrical Code Specifications and as approved by the Engineer, in consultation with NYCDOT's inspector.

Once installed in the field, each VMS will be subjected to an Operational Standalone Test. This test shall verify that the VMS is fully operational and properly programmed with an initial message library to be provided by the Engineer.

The Contractor shall be responsible for maintenance, repair, and continuous operation of the display units until progress of work no longer requires their use, as determined by the Engineer. As a minimum, the Contractor shall field check the VMS at least once per week, while deployed in the field. The Contractor shall make all necessary adjustments or repairs to the VMS that are found necessary during the field inspection. This field check shall include inspection of battery electrolyte levels, cleaning and tightening battery cable harnesses and testing the VMS to ensure that all pixels are operational and that the VMS is fully operational. The Contractor shall also inspect the placement of traffic control devices such as cones, drums, signs, etc., for conformance with the construction plans and details. If such traffic control devices are missing or not in place the Contractor shall replace the devices in accordance with the contract documents. This inspection and replacement if required shall be considered as part of this bid item and shall not be considered for additional compensation. Any defective or non-functional sign shall be replaced within 24 hours.

All components to be supplied under this specification shall be under warranty for a minimum of two-years from the conclusion of the system acceptance test. This warranty shall include repair and/or replacement of all failed components via a factory authorized depot repair service. All items sent to the depot for repair shall be returned within two weeks of the date of receipt at the facility. The depot location shall be in the United States. Repairs shall not require more then two weeks from date of receipt and the provider of the warranty shall be responsible for all return shipping costs. The depot maintainer designated for each component shall be authorized by the original manufacturer to supply this service. A warranty certificate shall be supplied for each component from the designated depot repair site indicating the start and end dates of the warranty. The certificate shall be supplied at the conclusion of the system acceptance test and shall be for a minimum of two years after that point. The certificate shall name NYCDOT as the recipient of the service. The Engineer in consultation with NYCDOT shall have the right to transfer this service to other private parties who may be contracted to perform overall maintenance of the facility.

One copy of all operations and maintenance manuals for each portable VMS component shall be delivered for each assembly installed. For this project, a training course shall be conducted to review the operations and maintenance of all components. The training course shall consist of a minimum of two (2) 8-Hour sessions for each person and be scheduled for 6 City employees at TMC.

At the conclusion of the project, VMSs shall be delivered to a site designated by the Engineer. Each VMS shall be tested upon this delivery and must be in good working order in accordance with these specifications.

8.08VMS.4. MAINTENANCE CONTRACT:

For the duration of the project the Contractor shall be responsible to maintain VMS as per specification based on a specified on call service contract. The Commissioner, in consultation with NYCDOT, can cancel the maintenance contract at any time.

8.08VMS.5. METHOD OF MEASUREMENT:

A. The quantity to be measured for payments under Item 8.08 VMS, VARIABLE MESSAGE SIGN, shall be the number of Variable Message Signs satisfactorily installed where specified for use under this project. No additional measurement will be made for any relocation of variable message signs or for any temporary removal and subsequent reinstallation of variable message signs.

B. The quantity to be measured for payments under Item 8.08 VMSC, VARIABLE MESSAGE SIGN COMPUTER, shall be the number of Variable Message Sign Computers satisfactorily installed where specified for use under this project.

8.08VMS.6. BASIS OF PAYMENT:

A. The contract price bid for Item 8.08 VMS, VARIABLE MESSAGE SIGN, shall be a unit price per each Variable Message Sign and shall include the cost of all materials, labor, tools, equipment, documentation, testing, maintenance, insurance, and incidentals necessary to furnish, install, maintain, and remove, when directed, a variable message sign, complete, in accordance with the plans, the specifications, and the directions of the Engineer.

B. The contract price bid for Item 8.08 VMSC, VARIABLE MESSAGE SIGN COMPUTER, shall be a unit price per each Variable Message Sign Computer and shall include the cost of all materials, labor, tools, equipment, documentation, testing, maintenance, insurance, and incidentals necessary to furnish, install, maintain, and remove, when directed, a variable message sign computer complete with software, in accordance with the plans, the specifications, and the directions of the Engineer. The initial computer furnished under this item shall be a Desktop Computer and all subsequent computers furnished under this item shall be Notebook Computers.

C. No payment will be made for repair or replacement of damaged materials made necessary due to the Contractor's operations.

Payment of the unit price bid under each item will be made as follows:

20% payable upon equipment installation and satisfactory completion of installation tests.

25% payable upon project acceptance of the variable message sign or variable message sign computer, as applicable.

30% payable in monthly installments in proportion to the amount of the project completed following acceptance of the variable message sign or variable message sign computer, as applicable. Monthly payments will be dependent upon the Contractor performing all maintenance duties as may be required.

25% payable upon delivery of equipment to a site designated by the Engineer and satisfactory completion of tests as may be required by the manufacturer to verify that the unit is operational.

Payment will be made under:

Item No.	Description	Pay Unit
8.08 VMS	VARIABLE MESSAGE SIGN	EACH
8.08 VMSC	VARIABLE MESSAGE SIGN COMPUTER	EACH

Desktop Computer:

Module	Description
Make and Model	HP, Dell, Gateway, Toshiba; or, an approved equivalent. Note: An approved equivalent requires written approval of the Assistant Commissioner of ITS.
Processor	Intel Core 2 Duo Processor E6550 (2.33 GHz, 4M VT 1333MHz FSB) or faster
Operating System	Microsoft® Windows® XP Professional or Vista Business® , SP1 with Media and NTFS
Memory	2 GB or More, DDR2 Non-ECC SDRAM, 800 MHz
Keyboard	Entry Level Keyboard, PS/2, (No Hot Keys)
Monitor	19" LCD Monitor or Better
Graphics Card	PCI or AGP Interface with a minimum of 256 MB or RAM
Boot Hard Drive	160GB 7200RPM IDE Hard Drive
Mouse	PS/2
USB Memory Key	256MB USB Memory Key
CD ROM/DVD ROM	8X DVD+RW/+R AND 48X CDROM with Roxio® Easy CD Creator plus DVD Decode or faster version
Speakers	Two Piece Stereo System
Wireless	802.11 b/g USB 2.0
Sound	Built in sound
I/O Ports	At least: 2 serial, 8 USB2.0, 1 parallel, 1 IEEE1394 port, RJ45 Ethernet Port
Energy Star	Energy Star Compliant
Documentation Diskette	Resource CD contains DIgonstics and Drivers for the System

Notebook Computer:

Module	Description
Make and Model	HP, Dell, Gateway, Toshiba; or, an approved equivalent. Note: An approved equivalent requires written approval of the Assistant Commissioner of ITS.
Processor	Intel Core 2 Duo Processor 3.40GHz, 512K / 800MHz FSB or faster
Operating System	Microsoft® Windows® XP Professional or Vista Business® , SP1 with Media and NTFS
Memory	2 GB or more, DDR SDRAM Memory (2 DIMMS)
Graphics Card	4XAGP graphics w/128MB DDR Video Memory
Boot Hard Drives	160GB ATA-100 IDE (7200 rpm)
Modem	Internal 56K Modem
Modular Bay Devices	DVD/CD-RW combo or higher
Speakers	Two Piece Stereo System (builtin)
Wireless Local Area Networking Options	Intel® PRO/Wireless 2100 WLAN (802.11b,11Mbps) miniPCI Card
Battery	9-Cell Primary Battery
I/O Ports	At least: 1 serial, 1 parallel, 1 IEEE 1394, 2 UBS 2.0, RJ45 Ethernet Port
Factory-Installed Software	Norton Antivirus® 2009, 12-month subscription
Additional Battery	9-Cell Spare primary battery
Case	Yes

SECTION 8.32
Bark Chip Mulch

8.32.1. DESCRIPTION. Under this section, the Contractor shall furnish and place Bark Chip Mulch in accordance with the plans and specifications and as directed by the Engineer.

8.32.2. MATERIAL. Bark Chip Mulch shall be a natural forest product of 98% bark containing less than 2% wood or other debris. It shall be of white or Red Fir and/or Pine bark of a uniform grade with no additives or any other treatment. Size of bark shall be from 5/8" to 1-1/4". The ph factor should range from 5.8 to 6.2.

8.32.3. METHODS. Bark Chip Mulch shall be applied where required on the plans or directed by Engineer as a ground cover to the surface of beds and tree pits after the planting is completed. Mulch shall be applied to a uniform depth of three (3") inches and shall be so distributed as to create a smooth, level cover over the exposed soil. Plants shall not be covered.

8.32.4. MEASUREMENT. The quantity of Bark Chip Mulch to be paid for will be the number of square yards of ground surface area that has been satisfactorily covered with bark chip mulch within limits of enlarged tree pits surrounding existing trees as indicated on the plans and where directed by the Engineer.

8.32.5. PRICE TO COVER. The unit price bid per square yard for Bark Chip Mulch shall cover the cost of all labor, materials, plant, equipment, insurance, and incidentals necessary to complete the work under this section in accordance with the plans, the specifications and the directions of the Engineer.

No payment will be made under this item for furnishing and placing mulch in tree pits around newly planted or transplanted trees.

Payment will be made under:

Item No.	Item	Pay Unit
8.32	BARK CHIP MULCH	S.Y.

SECTION 9.07

Non-woven Geotextile, Weed Barrier and Root Barrier

9.07.1. INTENT. This section describes the installation of non-woven geotextile that is to be furnished and installed as part of this project as WEED BARRIER and installation of High Density Polyethylene geomembrane that is to be furnished and installed as part of this project as ROOT BARRIER.

9.07.2. DESCRIPTION. Under these Items, the Contractor shall furnish and install WEED BARRIER and ROOT BARRIER in accordance with the plans and specifications, as directed by the Engineer.

9.07.3. MATERIALS, WEED BARRIER: All WEED BARRIER shall be non-woven geotextile and shall be synthetic and rot proof. It shall be manufactured for the purpose of providing a weed protection barrier.

(A) Definition: Weed protection application is defined as the horizontal placement of a flexible porous geotextile under pavers and/or landscape mulch to inhibit weed growth at the landscape surface.

(B) Weed Barrier shall be a one hundred percent (100%) polypropylene woven or non woven spun bond fabric with UV inhibitors. The fabric shall prevent weed germination and reduce maintenance while allowing water, herbicides and fertilizers to pass through. The fabric shall demonstrate the following minimum characteristics: having a minimum ASTM D-4491 water permeability of 12 gallons per minute per square foot; ASTM D-4632 Tensile Strength of 95; and an ASTM D-4355 Ultraviolet Exposure of 70% strength retained after 150 hours of exposure.

(C) PRODUCT SUPPLIERS:

1) Architect's Choice 295 Series; Ground Cover Industries, Inc.; Warnerville, IL 1-800-550-4424

2) WB Pro Black 3 oz Fabric; DeWitt Company, Sikesone, MO 63801 1-800-888-9669

3) Mirafi MSCAPE Geosynthetic; TenCate Co. Pendergrass, GA 800-685-9990; www.mirafi.com;

9.07.4. MATERIALS, ROOT BARRIER: All ROOT BARRIER shall be High Density Polyethylene geomembrane and shall be synthetic and rot proof. It shall be suitable for the purpose of providing a root protection barrier.

(A) Definition: Root protection application is defined as the horizontal or vertical placement of a High Density Polyethylene (HDPE) geomembrane under or alongside planting areas to inhibit root growth and penetration beyond the designated planting area especially where such growth would interfere with structures.

(B) High Density Polyethylene (HDPE) geomembrane Root Barrier. Thickness (minimum average): 40 mil/1.00 mm. HDPE Root Barrier specifications to meet or exceed GRI GM 13.

(C) PRODUCT SUPPLIERS:

1) GPS HDPE Root Barrier 40 mil; Global Plastic Sheeting, 1331 Specialty Drive, Vista, CA 92081 (760) 597-9298;
2) Root Barrier VR; Tremco, 3735 Green Road, Beachwood, OH 44122 (800) 562-2728;
3) 40 mil Root Barrier; Americover Inc, 2067 Weinridge Place, Escondio, CA 09029 (800) 747-6095.

9.07.5. SUBMITTALS.

(A) Submittals: All submittals shall be submitted in accordance with the requirements of the contract. The Contractor shall submit the following for the Engineer's review and approval prior to purchase:

1. Manufacturer's Data: The Contractor shall submit manufacturer's data with sufficient detail to demonstrate compliance with the requirements of this specification.

1. Samples: The Contractor shall furnish the required number of samples of the weed or root protection material for use in the work for approval and the Engineer's use, but not less than two samples 8" x 8". The label shall include the manufacturer's product name, the type of fabric, and the weight of grade of the material.

2. Certification: Provide the manufacturer's certificate stating the name, product name, style number, chemical composition and other pertinent information to fully describe the product.

3. Manufacturer's installation guidelines.

4. Material Safety Data Sheet for active ingredients.

9.07.6. DELIVERY, STORAGE AND HANDLING

(A) Delivery, Storage and Handling:

1. Deliver materials to site in manufacturer's original, unopened packaging, with labels clearly identifying product name and manufacturer, style number and roll number and including a compliance statement certifying that all ingredients and inspection standards for the product have been met.

2. Materials shall be protected from damage due to shipment, water, sunlight, and contaminants. The protective wrapping shall be maintained during periods of shipment and storage.

3. During storage, product shall be elevated off the ground and out of direct sunlight.
4. Handling: Protect materials during handling and installation to prevent damage.

5. Either mislabeling or misrepresentation of materials shall be reason to reject those products.

(B) Examination:

1. Examine subgrade areas to receive weed barrier or root barrier. Notify Engineer if areas are not acceptable. Do not begin installation until unacceptable conditions have been corrected.

(C) Installation Weed Barrier:

1. Install non-woven, geotextile in accordance with manufacturer's instructions at locations indicated on the Drawings.
2. Areas where weed barrier fabric is to be installed shall be smooth, firm, stable and free of rocks, clods, foliage, roots, trash, debris or other material that will prevent the matting from lying in direct contact with the soil surface. The landscape fabric shall be placed where shown in the contract documents and as required by the manufacturer. Fabric shall overlap by six inches and be pinned into position using landscape wire stables 3" long with stables placed a minimum of six feet on center.

3. The woven or non-woven geotextile shall be rolled directly on the ground. All seams shall be overlapped approximately six (6") inches. When joining two pieces of geotextile, be sure they do not become separated at any point.

4. Seaming can be accomplished by using construction adhesive and/or overlapping. Sod pins may also be used for seams, but make sure there are no gaps.

5. Secure fabric with pins every six feet on center.

6. Do not allow gaps in fabric during installation or backfilling.

7. No equipment, materials or machinery shall be placed on or be transported over exposed geotextile.

D) Installation Root Barrier:

1. Install High Density Polypropylene in accordance with manufacturer's instructions at locations indicated on the Drawings.
2. Areas where root barrier material is to be installed shall be smooth, firm, stable and free of rocks, clods, foliage, roots, trash, debris or other material that will prevent the geomembrane from lying in direct contact with the subgrade surface. The material shall be placed where shown in the contract documents and as required by the manufacturer.

3. The material shall be rolled directly on the ground. All seams shall be overlapped approximately six (6") inches. When joining two pieces of geomembrane, be sure they do not become separated or form gaps at any point.

4. Place topsoil and/or structural soil as shown on the plans and as directed by the Engineer shall then be carefully placed to prevent dislocation of the geomembrane. If the material is damaged during installation, the rupture shall be removed and the damaged area shall be covered with a patch of new material that will overlap the undamaged fabric approximately six (6") inches in all directions. All repaired material surface costs will be deemed part of the price bid.
5. Cost of the Topsoil shall pay separately under Item No.4.15 and the cost of Structural Soil shall pay separately under Item No. 4.15 SS.

9.07.7. MEASUREMENT. The quantity of WEED BARRIER and ROOT BARRIER to be paid for shall be the number of SQUARE YARDS of each type required, measured in its final position, furnished and installed in accordance with the plans and specifications and the directions of the Engineer.

9.07.8. PRICE TO COVER. The price bid shall be a unit price per SQUARE YARD of each type installed and shall include the cost of furnishing all labor, material, equipment, insurance, submittals, and incidental expenses necessary to complete the work in accordance with the plans and specifications and to the satisfaction of the Engineer.

Payment will be made under:

Item No.	Item	Pay Unit
9.07 ARB	NON-WOVEN GEOTEXTILE – ROOT BARRIER	S.Y.
9.07 AWB	NON-WOVEN GEOTEXTILE – WEED BARRIER	S.Y.

SECTION: NYC-665.16000011 - FURNISH AND INSTALL BOLLARDS

DESCRIPTION

Under this item, the Contractor shall furnish and install the new cast iron bollards and pipe supports in locations shown on the plans, in accordance with the Contract Drawings, these specifications and as directed by the Engineer.

MATERIALS

Materials shall meet the following requirements:

Cast Iron Bollards	ASTM A48 Grade 30-B Gray Cast Iron in color selected for this project. Bollard shall have a minimum wall thickness of 0.37 in and a minimum weight, 220 lb.
Pipe, Carbon Steel, Seamless	ASTM A106, Extra Strength, galvanized, 6 in. outside diameter, concrete filled.
Steel Plate	Subsection 715-01 of the NYS DOT Standard Specifications
Concrete	Subsection 501, Class A of the NYS DOT Standard Specifications
Portland Cement	Subsection 701-01 of the NYS DOT Standard Specifications
Paint	Subsections 708-03 and 708-08 of the NYS DOT Standard Specifications

CONSTRUCTION DETAILS

Bollards shall be furnished and installed according to the details and at locations shown on the plans, complete with pipe supports, base plates and anchor bolts.

Pipe supports and base plates shall be coated with dull orange primer and asphalt-base emulsion prior to setting.

Install pipe supports, anchor bolts, base plates and bollards and foundations as detailed on the drawings and as directed by the Engineer. The Contractor shall carefully coordinate the inner dimensions of the bollard with the outside diameter of the pipe support.

METHOD OF MEASUREMENT

The quantity to be paid for under this item will be the number of bollards actually installed at the site, to the satisfaction of the Engineer.

SECTION: NYC-665.16000011 - FURNISH AND INSTALL BOLLARDS

BASIS OF PAYMENT

The price bid for Bollard shall be a unit price per EACH and shall include the cost of all labor, materials, equipment, insurance, and incidental expenses including, but not limited to, furnishing and installing the bollards, complete with pipe supports, anchor bolts, base plates and concrete foundations necessary to complete the work; all in accordance with Contract Drawings, the specifications and the direction of the Engineer.

Payment will be made under:

Item No.	Item	Pay Unit
NYC-665.16000011	FURNISH AND INSTALL BOLLARDS	EACH

(NO TEXT ON THIS PAGE)

1.4. Time of Completion

The Contractor must complete the work under this Section prior to the start of any other work under this project which may restrict the flow of traffic, unless otherwise permitted by the Engineer.

1.5. Interpretation of Apparent Omissions

The apparent silence of the NYCDOT Standard Specifications and these Detail Specifications as to any detail, or the apparent omission from them of a detailed description concerning any work to be done and materials to be furnished, shall be regarded as meaning that only the best general practice is to prevail and that only the best material and workmanship is to be used. Interpretations of the specifications shall be made upon that basis.

1.6. Conflict

Should any conflict occur in or between the Contract Drawings and NYCDOT Standard Specifications, the Contractor shall be deemed to have estimated on the more expensive way of doing the work, unless he or she shall have asked for and obtained a decision in writing from NYCDOT before the submission of bid as to what shall govern.

1.7. Omission of Details

All work called for in the Specifications but not shown in the Contract Drawings in their present form, or vice versa, and work not specified in either the Contract Drawings or in the Specification but involved in carrying out their intent or in the complete and proper execution of the work, is required, and shall be performed by the Contractor as though it were specifically delineated or described.

1.8. Adherence to Laws, Rules & Regulation

All work performed under this contract shall comply with the New York City Highway Rules 34 RCNY Ch. 2 of the New York City Department Of Transportation. The Contractor shall also adhere to all other applicable laws, rules and regulations including the following:

- Sidewalk flags must be fully restored where excavated for the installation of conduit or a foundation.
- On non-protected streets trenches of, or less than, 12" in final restoration require a cut back of 6" of the wearing course on both sides of the trench, so that the cut is a minimum of 18" wide.

1.9. Method of Measurement

The quantity to be measured for payment shall be the number of Dome Camera Systems installed, to the satisfaction of the Engineer.

1.10. Price to Cover

The contract unit price bid per each Complete Dome CCTV Camera System furnished and installed on a City-owned utility pole shall cover the cost of all labor, materials, plant, equipment, insurance, and incidentals necessary to complete the work under this Section, in accordance with the plans, the specifications and the directions of the Engineer. The unit price also includes the cost of maintenance of the CCTV Camera System throughout the duration of the project.

1.11. Method of Payment

Progress payments for the Dome Network Camera system will be made as follows:

- Upon the complete purchase and field installation, the Contractor shall be paid 50% of the amount bid for each camera satisfactorily installed.
- Upon the complete field inspection and system integration at the Traffic Management Center (TMC), 28-11 Queens Plaza North, and verifying that the system is completely operational, the Contractor shall be paid 20% of the amount bid for each camera.
- Upon completion of the project and successful acceptance, the Contractor shall be paid the remaining 30% of the unit price bid for each camera.

Payment will be made under:

Item No.	Item	Pay Unit
T-93000	FURNISH AND INSTALL COMPLETE DOME CCTV CAMERA SYSTEM ON CITY-OWNED UTILITY POLE	EACH

65001. Furnished Dome Camera Specifications

The following detailed specifications for materials, method of measurement, and basis of payment are provided for work to be performed under this contract.

65001.1. Abbreviations & Definition of Terms

- **Abbreviations**

AASHTO	American Association of State Highway and Transportation Officials
AC	Area Computer
ANSI	American National Standards Institute
ASTC	Advanced Solid State Traffic Controller
ASTM	American Society for Testing and Materials
CPU	Central Processing Unit
DCE	Data Communications Equipment
EMI	Electromagnetic Interference
FCC	Federal Communications Commission
FTP	File Transfer Protocol
ICEA	Insulated Cable Engineers Association
IEEE	Institute of Electrical and Electronic Engineers
ITE	Institute of Transportation Engineers
LAN	Local Area Network
LED	Light Emitting Diode
MCBF	Mean Counts Between Failures
MTBF	Mean Time Between Failures
MTTR	Mean Time To Repair
MURK	NYSDOT's Manual of Uniform Record Keeping
MUTCD	Manual on Uniform Traffic Control Devices
NEC	National Electric Code
NEMA	National Electrical Manufacturers Association
NTCIP	National Transportation Communications for ITS Protocol
NYCDOT	New York City Department of Transportation
NYSDOT	New York State Department of Transportation
OSHA	Occupational Safety and Health Administration
PVC	Polyvinyl Chloride
TCP/IP	Transmission Control Protocol/Internet Protocol
TMC	Traffic Management Center
UCC	Uniform Construction Code
UID	Universal Identification Number
UL	Underwriters' Laboratories
VTCS	Vehicular Traffic Control System
WAN	Wide Area Network

The publications, specifications, test methods and standards of any organizations listed above to which referral or mention is made shall be the latest edition of such publication and any interim modifications in effect on the date the Contract Documents are made available, unless otherwise noted.

65001.2. Instructions & Guarantees

65001.2.1 One set of complete schematics and operations/maintenance manuals of the each component of the camera assembly shall be supplied with each five assemblies furnished. Maintenance manuals shall include complete sub-component parts listing.

65001.2.2 No changes or substitutions in these requirements will be acceptable unless authorized in writing. Inquiries regarding this specification shall be addressed to 34-02 Queens Blvd. / 2nd Floor, Long Island City, NY 11101.

65001.2.3 The complete camera assembly shall carry a one-year guarantee from the date of acceptance against any imperfections in workmanship or materials.

The Contractor shall be responsible for the monthly maintenance charges and operating cost of the communication from service provider until the warranty is over.

65001.2.4 The manufacturer agrees upon the request of the Engineer-in-Charge (E.I.C) to deliver to the Office, a sample of the complete camera assembly to be supplied in compliance with these specifications for inspection and test before acceptance.

65001.2.5 The supplier shall furnish any and all equipment which they deem necessary for safe and reliable field operation of the camera equipment as part of the quoted price for the specified equipment.

65001.2.6 All camera components furnished under this specification must be current production equipment and of recent manufacturer, identical models of which are in field operation in not less than one hundred (100) locations in the United States or Canada. Untried or prototype units shall not be considered for acceptance.

65001.2.7 All major components shall be identified with a metal plate containing the serial number with bar code identification.

65001.2.8 Any repairs made by a manufacturer or representative shall be documented and returned with units when warranty repaired. This documentation shall include an explanation of the exact repairs made and identification of parts replaced by part number and circuit number. All warranty repairs must be completed within thirty (30) days of delivery of the equipment to the designated repair depot.

65001.2.9

The video signals shall be transmitted to the NYCDOT Traffic Management Center; The Contractor shall furnish protocol for communication between the Operations Center and all field equipment installed under this contract. All cameras shall interface with New York City flow map chart and the New York City DOT web site so that the operator at the Traffic Management Center shall have the capability to control the cameras through the transuite system.

65001.3. NTCIP

To ensure compatibility and interchangeability with equipment furnished in previous and future contracts, the Dome Network (IP) Camera Assembly shall be compliant with the latest version of the NTCIP Standards, as defined by AASHTO, ITE, and NEMA. Including the following:

- An optional NTCIP board that converts control signals from NTCIP controllers shall also be available.
- New York State NTCIP specification item number "683.1014 11- DOME TYPE CCTV CAMERA ASSEMBLY", excluding the requirement to provide warranties and guaranties to

the State of New York Department of Transportation and both the "METHOD OF MEASUREMENT" and "BASIS OF PAYMENT" provisions of Item No. 683.1014.11.

65001.4. General

65001.4.1 Components

The outdoor Dome Network IP camera system shall be a discreet, pendant Network IP camera dome system consisting of a dome drive with a variable speed/high speed pan/tilt drive unit with continuous 360° rotation; 1/4-inch high resolution color CCD camera; motorized zoom lens with optical and digital zoom; auto focus; and an enclosure consisting of a back box, lower dome, and a quick-install mounting. The Dome Network Camera shall support High Power over Ethernet.

The Contractor is responsible to deliver a working system any device major or minor not listed below that is needed for proper operation shall be supplied.

65001.4.2 Environmental

All CCTV components, while housed in their associated environmental enclosures, shall operate in the ambient temperature range of -60°F to 140°F and shall meet NEMA 4 weatherproof standards.

65001.5. Pendant Dome Network IP Camera

65001.5.1 Configuration

The Camera shall be blemish-free, designed to minimize or eliminate transfer smear and insure acceptable operation during minimal lighting conditions. The camera shall be capable of unattended, continuous 24 hour per day operation in an outside plant environment.

The camera shall be fully integrated with the zoom lens described under Section 65001.6 of this specification. The camera shall accept standard C or CS zoom or fixed lenses and shall be equipped with an auto-iris lens connector with manual override compatible with the zoom lens supplied. The unit shall produce NTSC compatible video utilizing a 1 volt Peak to Peak composite @ 75ohms output, and an input voltage between 22 to 27 VDC. The camera must be fully compliant with all aspects of the NTSC specification.

65001.5.2 Resolution & Sensitivity

At least 470 horizontal TVL lines must be produced by the camera and 724 horizontal x 494 vertical active pixels must be produced by the assembly.

The night sensitivity of the camera is a key concern in that the unit may have to operate in areas with no primary lighting system.

A full video shall be obtainable using an f/1.6 lens and with a minimum illumination of .08 lux at 1/2 sec. Video signal to noise ratio shall exceed 50 decibels. The camera shall be equipped with AGC (Automatic Gain Control). The AGC feature shall be switch selectable (On/Off) and be equipped with a variable peak average control.

65001.5.3 Synchronization & Automatic Control

Synchronization shall be via AC line frequency line-lock with phase adjust using a remote control. Line-lock synchronization utilizes the AC power frequency for the vertical sync

reference. An internal Isolation transformer shall be provided to reduce ground loop potential and allow multiple cameras to be powered from a single power supply.

A variable speed electronic shutter shall also be provided. The automatic shutter speeds shall be adjustable from 1/2 to 1/30 000 in 1-stop increments.

The camera shall have continuous automatic (through the lens) white balance control with manual override and black light compensation circuitry to adjust the picture dynamically in response to the varying light conditions encountered in outside environments. In this regard, pictures with an appropriate color balance shall be obtainable within all specified illumination conditions.

65001.6. Zoom Lens

65001.6.1 Basic Configuration

A fully motorized zoom lens fully compatible with the camera specified in Section 65001 is to be supplied. The zoom lens shall be capable of supplying magnification of at least 35x optical and 12x digital zoom with autofocus, providing crisp, clear and rich detail of both zoomed in and zoomed out image. The lens must have an auto-iris capability compatible with the camera and a wide dynamic range of at least 80X.

65001.6.2 Field of View

The camera and associated zoom lens with an Automatic with manual override shall produce the following minimum field of view in the required magnification range of 54° at 3.6 mm wide zoom.

65001.6.3 Remote Control

The zoom magnification shall be fully controllable via the remote PTZ mechanism. The motors controlling the Iris, Zoom, and Focus shall be slip clutch protected to prevent damage due to overload.

65001.7. Environmental Enclosure

65001.7.1 Basic Configuration

The environmental enclosure shall be designed to protect the camera and zoom lens from the outdoor environment which the assembly must be designed to function in. The assembly must be supplied with an integral sun shield.

The housing shall be constructed of aluminum and be finished with white or beige, weatherproof, heat-reflecting paint. The enclosure shall protect the camera and zoom lens from harsh outdoor weather conditions. It shall provide a sealed, marine climate resistant, protective environment meeting NEMA-4 (IP65) weatherproof standards.

65001.7.2 Zoom Lens Clearances

The camera and zoom lens shall be mounted to insure that the enclosure will not obstruct the field of view of the camera. Sufficient clearance between the zoom lens extended to its furthest point of travel and the enclosure face plate shall be provided to insure that mirroring on the window will not be obtained.

65001.7.3 Heater

The enclosure shall be equipped with a heater controlled by a thermostat. The heater shall engage when temperature within the enclosure falls below 41°F. The heater shall disengage when temperatures exceed 50°F. The heater shall minimize internal fogging of the face plate when the assembly is operated in cold weather.

65001.7.4 Cable Entry

Cable entry shall be through 1.5" NPT pendant mount. Sufficient cable lengths shall be provided to reach the Control Receiver Junction Box.

65001.7.5 Mounting to PTZ Mechanism

The mounting assembly of the environmental enclosure shall be attached to the PTZ base assembly by stainless steel circular clamps. Each circular clamp shall be torqued to 13.6 kilograms.

65001.7.6 Lower Dome

Special care shall be taken when installing the lower dome bubble to ensure that an optimal optical relationship between the lens and bubble was achieved, providing crystal clear video at long focal lengths.

65001.8. Dome Drive

Dome Drive Features

- 400°/ second Pan Preset Speed and 220°/ second Tilt Preset Speed.
- 256 presets, ± 1° Preset Accuracy.
- 10 alarm inputs.
- Continuously decreases Pan/Tilt speeds in proportion to depth of zoom.
- Pan motion allows 0.1-150°/sec Pan Speed.
- Digital Position, zoom control and feedback.
- Rotating Discreet Liner with Sealed Fixed Bubble.
- Multiple Park and Power-Up Action.
- Programmable Zoom Speeds.

65001.9. Dome Network IP Camera and Built-in encoder

65001.9.1 General Requirements and System integration

The Dome Network IP Camera shall

- Support Pan/Tilt/Zoom functionalities including Guard tour, tour recording, control queue capability that allow a user with a higher PTZ priority can take control before other users in the queue, on-screen directional indicator
- Be IP66– and NEMA 4x-rated metal casing (aluminum)
- Support and include High Power over Ethernet (PoE) port
- Be equipped with network interface of 10BASE-T/100BASE-TX PoE using standard RJ-45 connectors
- Be equipped with local storage SD/SDHC memory card slot
- Supported by an Open API (Application Programing Interface) for software integration of functionality into a third party applications
- Support intelligent Video motion detection, autotracking, Active Gatekeeper
- Support overlay

- Be equipped with an alarm events feature that can configure up to 10 events type that can be configured via the web interface to trigger actions:
  Alarm events can be triggered by:
    - Motion Detection
    - An upload application
    - Autotracking
    - Pan Tilt Zoom preset
    - Temperature
    - Memory card full
    - Fan malfunction
    - System events such as system boot

  Alarm events actions include:
    - File upload to an event server via FTP, HTTP and email
    - Notification via email, HTTP and TCP
    - Go to PTZ preset
    - Run Guard Tour
    - Run autotracking
    - Record to local storage
    - Pre-and post-alarm video buffering
- The video shall not require any additional software to operate and the video shall be able to be accessed from web browser:
    - Camera live view
    - Video recording to file (ASF)
    - Customizable HTML pages
    - Windows 7, Windows Vista, Windows XP, Windows Server 2008, Windows Server 2003
    - DirectX 9c or higher
- Network Security:
    - Multiple users access level control with password protection,
    - Support IP address filtering,
    - Supports encrypted browsing using HTTPS encryption
    - IEEE 802.1X network access control authentication
    - Digest authentication,
    - User access log

65001.9.2 Certifications and standards

The Dome Network IP video camera shall carry the following approvals:

- EN55022 Class B, EN 61000-3-2, EN 61000-3-3, EN 61000-6-1, EN 61000-6-2, EN55024
- FCC Part 15 - Subpart B Class B
- ICES-003 Class B
- VCCI Class B
- C-tick AS/NZS CISPR 22
- KCC Class A
- EN 60950–22
- IEC 60529 IP66
- NEMA 250 Type 4X
- IEC 60068–2–1, IEC 60068–2–2, IEC 60068–2–78, IEC 60068–2–14, IEC 60068–2–30,
- IEC 60068–2–6, IEC 60068–2–27, IEC 60068–2–60

- ISO 4892–2
- Midspan: GS, UL, cUL, UL-AR, CE, VCCI, CB, KCC

65001.9.3 Video

- Compression
  - The built-in video encoder shall provide simultaneous support for H.264 (MPEG-4 Part 10/AVC) and Motion JPEG
  - The H.264 and Motion JPEG implementation shall include support for both constant Bit Rate (CBR) and Variable Bit Rate (VBR), and shall support both unicast over RTP, unicast over RTP over RTSP, unicast over RTP over RTSP over HTTP as well as multicast over RTP.
  - The built-in video encoder shall provide at least 11 different compression levels.
  - The built-in video encoder shall be capable of providing bit rates between 1kbps and 12 Mbps per video stream.
- Video Resolutions

  The camera should be able to provide an HDTV 1080p 1920x1080 to 320x180 and an HDTV 720p 1280x720 to 320x180
- Frame Rate
  - The H.264 video compression should be able to provide up to 30 fps in 1080p and 60 fps in 720p
  - The Motion JPEG compression should be able to provide up to 25 fps in 1080p and 50 fps in 720p
- Image enhancement: The built-in video encoder shall contain an embedded de-interlacing filter.

65001.9.4 Functionality

Web encoder:

- The Network IP camera shall contain a built-in web encoder making video and configuration available in a standard browser environment using HTTP, without the need for additional software.
- When accessed from a browser, the web encoder shall provide users with online, context-sensitive help.
- The Network IP camera shall not require any additional software to operate, and shall support full functionality when operating in the following environment:
  - Operating Systems: Windows 2000, Windows XP
  - Browsers: MS Explorer 6.x and higher
- Components such as Active X downloaded from the built-in video encoder shall be signed by an organization providing digital trust services, such as VeriSign, Inc.
- The built-in video encoder's web encoder shall support up to twenty (20) simultaneous unicast clients and unlimited number of clients using multicast MPEG-4.
- The built-in video encoder's integral web encoder shall provide support for defining usernames and passwords for a minimum of three (3) different types of users.

IP addresses:

- The built-in video encoder shall support both fixed IP addresses and dynamically assigned IP addresses provided by a Dynamic Host Control Protocol (DHCP) encoder.
- The built-in video encoder shall allow for automatic detection of the unit based on UPnP and Bonjour when using a PC with an operating system supporting this feature.
- The built-in video encoder shall provide support for both IPv4 and IPv6.

Bandwidth management: The built-in video encoder shall

- Provide the ability to control network traffic by limiting the maximum bandwidth to a selected value.
- Provide the capability to limit the frame rate per viewer to a selected value, as well as the duration of each viewing session.
- Support Quality of Service (QoS) to be able to prioritize traffic.

PTZ functionality: The built-in video encoder shall

- Provide the ability to control PTZ devices from third party manufacturer.
- Provide at least one hundred (100) preset positions.
- Provide a guard tour functionality which allow the PTZ device to automatically move between selected presets using an individual speed and viewing time for each preset.

Event functionality:

- The built-in video encoder shall be equipped with an integrated event functionality, which can be trigged by:
  - External input
  - Video Motion Detection
  - Video loss
  - Schedule
- Response to triggers shall include:
  - Notification, using TCP, SMTP or HTTP
  - Image upload, using FTP, SMTP or HTTP
  - Preset call up
  - Activating external output
- Event functions shall be configurable via the web interface.

Protocol support:
The built-in video encoder shall incorporate support for at least IPv4/v6, HTTP, HTTPS, SSL/TLS, TCP, QoS, SNMPv1/v2c/v3 (MIB-II), RTSP, RTP, UDP, IGMP, RTCP, SMTP, FTP, ICMP DHCP, UPnP, Bonjour, ARP, DNS, DynDNS, SOCKS, IEEE802.1X.

Text overlay:
The video encoder shall

- Provide embedded on-screen text in the video, with support for date & time, and a customer-specific text, camera name, of at least 45 ASCII characters. To ensure accuracy, the video encoder shall accept external time synchronization from an NTP (Network Time Protocol) encoder.
- Provide the ability to apply a privacy mask to the image.
- Allow for the overlay of a graphical image, such as a logotype, into the image.

Security:
Multiple user access levels with password protection, IP address filtering, HTTPS encryption, IEEE 802.1X authentication.

API support:
The built-in video encoder shall be fully supported by an open and published API (Application Programmers Interface), which shall provide necessary information for integration of functionality into third party applications.
Maintenance:

The built-in video encoder shall

- Be supplied with Windows-based management software which allows the assignment of IP addresses, upgrade of firmware and backup of the video encoders' configuration.
- Support the use of SNMP-based management tools according to SNMP v1, 2c & 3 / MIB-2.
- Allow updates of the software (firmware) over the network, using FTP or HTTP.

Customer-specific settings, including statically assigned IP address, the local time & date, event functionality and video configuration, shall be stored in a non-volatile memory and shall not be lost during power cuts or soft reset.

65001.9.5 Power requirements: 7-20 VDC, max 8 W.

65001.9.6 Environmental: The Dome network camera built-in video encoder and accessories shall

- Operate in a temperature range of -40°F to 122°F.
- Operate in a humidity range of 20 to 80% RH (non-condensing).

65001.9.7 Installation

- The Contractor shall carefully follow instructions in documentation provided by the manufacturer to insure all steps have been taken to provide a reliable, easy-to-operate system.
- All equipment shall be tested and configured in accordance with instructions provided by the manufacturer prior to installation.
- All firmware found in products shall be the latest and most up-to-date provided by the manufacturer, or of a version as specified by the provider of the Video Management Application (VMA) or Network Video Recorder (NVR).
- All equipment requiring users to log on using a password shall be configured with user/site-specific password/passwords. No system/product default passwords shall be allowed.

65001.10. Cabinet

65001.10.1 Cabinet housing

- The cabinet housing shall be weatherproof and rainproof with the top of the enclosure either crowned or sloped to prevent standing water. The cabinet shall be constructed to shield the top of the cabinet door to prevent water from entering between the top door gasket and the cabinet.
- The cabinet housing shall have a single front door, equipped with a three-point latch and lock. The cabinet shall be fabricated for side of pole mounting and shall be suitably re-enforced for both pole mounting.
- All exterior seams and the cabinet as a whole shall meet the requirements for Type 3R enclosures according to NEMA Standards Publication 250-1991.
- The cabinet shall be clean-cut in design and appearance. The maximum exterior dimensions, including the cabinet door (but not including the removable handle) shall be as follows:

23" High x 20" Wide x 15" Deep

65001.10.2 Material

The cabinet housing, doors, and gasket channels shall be fabricated of 0.1875" minimum thickness sheet aluminum, using Grade 5052-H32 aluminum alloy. The sheet aluminum shall be adequately reinforced as necessary. If necessary, reinforcing supports shall be welded to the inside of the door to prevent the warping or twisting of the door. (A minor deviation was

allowed for the current cabinet in the form of a lip using 0.125" material at the top of the door to improve water management over the door opening – see figure down). This deviation to the 0.1875" thickness requirement will be allowed providing all seams for this lip are continuously welded and only the top lip of the door opening is so modified. (Such a deviation must be submitted for approval by the ENGINEER.)

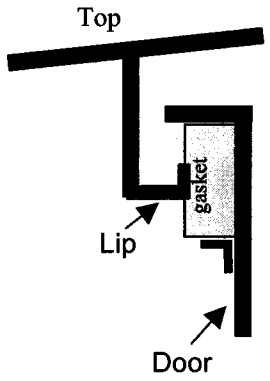

65001.10.3 Construction

- All construction shall be free of dents, scratches, weld burn through and abrasions harmful to the strength and general appearance. All exterior seams for the cabinet housing and door shall be continuously welded and shall be smooth and free of impurities. All exterior corners shall be rounded.
- There shall be no sharp edges or protrusions on the cabinet whether open or closed which might pose a risk of personnel cuts or injury. All sharp edges shall be sanded and deburred before painting.

65001.10.4 Exterior Surfaces

The exterior surface of the controller cabinet shall be powder coated, using medium green to match Federal Specification 595B Color 14062.

65001.10.5 Gasketing

- The housing shall have a door, securely gasket, which shall include substantially the full area of the front of the cabinet. Gasketing shall be provided on all door openings and shall be of dust-tight permanent type that will not peel off or deteriorate. Gaskets shall be 0.25" minimum thickness closed cell neoprene and shall be installed with contact cement for a permanent bond. The mating surface shall be sprayed or otherwise coated with a silicon lubricant to prevent sticking to the mating metal surface.
- The gasket material shall not be damaged by normal cabinet cleaning agents and solvents normally used to remove graffiti from the exterior of the cabinet.
- Gasket material shall be UV resistant.
- The design of the door and gasket shall be such that the integrity of the gasket material shall not be required to ensure that the internal cabinet assemblies are protected from water damage under adverse environmental conditions. Cabinet door assemblies shall be designed in such a way that damaged gaskets do not allow water to enter the cabinet.

Gasket material shall be continuous along the entire top of the cabinet door with no seams or joints in this section.

65001.10.6 Cabinet Door

(A) The cabinet door shall be hinged on the right side when facing the cabinet. The door hinge shall be continuous and bolted (piano) to the cabinet and door utilizing ¼ - 20 stainless steel carriage bolts and NY lock nuts. The hinge shall be made of 0.075" stainless steel and shall have a 3" open width with a 0.250" diameter stainless steel carriage hinge pin. The hinge pin shall be capped top and bottom by weld to render it tamper proof. The hinge leafs shall not be surface mounted on the outside of the cabinet. They shall be mounted between the door and the cabinet. The cabinet door hinges shall be bolted to the cabinet housing in a manner that prevents unauthorized personnel from removing the door with commonly available tools.

(B) The cabinet shall be equipped with an automatic, self-engaging catch to hold the door open at 135° (± 25°). The catch shall be capable of holding the door open in a 140 Mi/Hr wind coming at an incidence angle of 90 degrees referenced to the plane of the door. A means shall be provided to minimize the accidental release of the doorstop. The catch shall also be easily and reliably disengaged when closing the door so that the door and catch are not damaged.

(C) The door shall be furnished with a three-point latching mechanism. The latching mechanism shall be a three-point draw roller type. Push rods shall be turned edgewise at the outward supports and shall be 0.250" by 0.750" stainless steel, minimum. Rollers shall have a minimum diameter of 0.875 inch and shall be made of nylon. The center catch shall be fabricated from 0.134" stainless steel minimum. Stainless steel compensating wear guards shall be used at contact point for the three point latching; these shall be pop or blind riveted to the cabinet.

(D) The three-point locking mechanism shall be fabricated so that it may be actuated by rotating a removable 5/8" hex key door handle. The hex socket and locking cam shall rotate on a 0.5" minimum diameter shaft. The socket, shaft and hex key shall be fabricated from stainless steel, grade 2011P3 aluminum, or other material plated to prevent corrosion. The socket and shaft shall be field-replaceable with common tools. The socket head shall be protected from being rotated with a pipe wrench or similar tool. Designs shall be subject to approval by NYC DOT prior to fabrication. One (1) hex wrench shall be provided with each cabinet.

65001.10.7 Water Management

- The cabinet shall be constructed such that defective, aged, and damaged gasket material shall not allow water to enter the cabinet in any areas that might cause damage to the equipment or wiring mounted inside or the operation of the signals.
- The cabinet shall properly manage any condensation which may occur internally such that moisture cannot damage any of the internal cabinet assemblies, subassemblies, wiring or devices.
- There shall be no holes, seams, or attachments to the top of the cabinet that might cause water to leak for any reason.
- Weep holes approximately 3/16" in diameter shall be drilled in the bottom floor of the cabinet such that water does not accumulate in the cabinet.

65001.10.8 Door Lock

- The lock for the cabinet door shall be of the self-locking, heavy duty, pin tumbler, cylinder rim type. It shall be the Corbin No. 1548RS 7/8, keyed for a DT-9 key, with dust cover. Two DT-9 keys, constructed of brass or stainless steel are to be furnished with each cabinet. When the door is closed and latched, with the key removed, the door shall lock.
- During the installation of the lock, good grade of commercial silicone will be put around the cylinder to form a weather barrier between the front of the lock and the inside of the

cabinet door. A stainless steel lock protector plate shall be installed over the rear of the lock to prevent the rear of the lock from being punched out from the front of the cabinet.

65001.10.9 Cabinet Ventilation

- Each cabinet shall be provided with louvered vents in the cabinet door for fresh air. The vents shall be screened against the entrance to remove dust and foreign matter, with a removable and replaceable air filter 16" x 6" x 1" deep to filter incoming air. The filter shall be *Eco Air* type disposable filter or equivalent [reference: Eco-Air Products, Inc., San Diego, CA 92126, 619-271-8111] which is currently used and stocked by the City. The filter shall be a UL classified air filter-Class 2 644N.
- The filter shall overlap the vents by at least 1 inch and shall be held firmly in place with bottom and side brackets and a spring-loaded upper clamp. Provisions shall be made in the design of the vents to prevent snow and rain from being blown through the vents into the cabinet.
- The bottom filter bracket shall be formed into a waterproof sump with drain holes to the outside. The louvered vents shall be designed and constructed so that a stream of water from a pressure head, such as a *Rainbird* sprinkler or other type of water spray test, will not enter the cabinet. The louvered area shall be less than the filtered area.

65001.10.10 Cabinet Mounting

- The cabinet shall be mounted on the side of a pole.
- The mounting area shall include reinforcement angle or other stiffening techniques to prevent the back of the cabinet from deforming when attached to the pole.

65001.10.11 Labeling

- The cabinet shall be furnished with a metal plate embossed with the following two (2) lines of text:

TRAFFIC CONTROL
NEW YORK CITY

Alternatively, the information noted above may be permanently etched or embossed into the cabinet door in such a manner as to be clearly visible on the exterior of the cabinet.

- If a plate is used, it shall be 11" in length and 5" tall and welded the outside of the front door with the center of the plate located at the vertical centerline and midway between the top and the middle of the door. This plate shall be painted with the same green paint as the exterior of the cabinet. The text shall have letters that are 0.875" in height; the information noted above shall be embossed in a manner which allows this information to be read even after several coats of paint have been added to the cabinet. The welding for this plate shall be neat in appearance.
- The controller cabinet shall also be identified by model number, a serial number, and NYC DOT on a metal plate visible on the inside of the cabinet. Consecutive serial numbers shall also be stamped on the metal name identification plate and fastened to the inside of the cabinet by rivets which shall not protrude or otherwise be visible on the exterior of the cabinet.
- NYCDOT requires that each separate procurement contract or construction contract have serial numbers which are unique and identifiable. The Contractor shall work with the City to establish a numbering scheme that allows the City and its maintenance contractors to quickly identify the specific contract which provided the controllers. This requirement shall be true for all subassemblies as well so that the City can identify the origin of the part and determine which contractor is responsible for its maintenance.

65001.11. Modem

65001.11.1 General

The modem shall be used for field communications to Traffic control devices that include Microwave sensors, Variable message signs, cameras, traffic controllers and other intelligent transportation applications within the City of New York. This unit will be used in outdoor applications subject to extreme temperature and humidity housed in a NEMA type 3 R enclosures. The unit shall form the field end of a communications system including all components necessary to establish communications with our Traffic management center including components not addressed in this document.

65001.11.2 Features

- High speed data transfer rate.
- Compatible with the cell service carrier as directed by the Engineer.
- Compact size.
- Remotely manageable and upgradeable.

65001.11.3 Environmental

- Operating ranges: -22°F to 158°F
- Humidity: 5%-95% Non-condensing

65001.11.4 Design

- The modem shall have an input voltage from 9DC to 28DC, and shall also be able to operate from a furnished 110AC power supply that can be plugged directly into a standard power receptacle.
- The modem shall support available data service with dual-band receive diversity with a keep-alive function to ensure persistent connectivity.

65001.11.5 Communications

- The modem shall include an Ethernet or RS-232 ports to be determined by field devise that will interface with the modem or as directed by the Engineer.
- The modem shall be capable of wireless remote management, reconfiguration and firmware and PRL update.
- The modem shall be configurable as an SNMP agent for remote network management and have a software application able to create and save configuration templates and the ability to remotely monitor, update and report statistical data on user defined modem groups.
- Data rates:
    - Downlink-3.1 Mbps max; 450-850 kbps typical
    - Uplink- 1.8 Mbps max; 300-400 kbps typical
- The modem shall have a static IP address.

65001.11.6 Additional Equipment

- A 3db low profile outdoor antenna with a mobile thru sheet metal type of mounting system. The antenna shall be of such a design to be tamper and damage resistance. The unit shall be furnished with all connectors and cabling needed for installation.
- The modem shall be housed in a suitable enclosure meeting NEMA 3R standards for weather resistant enclosures and be of such a construction that it is resistant to corrosion and have provisions for locking with a padlock.
- The modem shall be supplied with all necessary power cables and adapters for either low voltage DC or 110v AC operation.

- The modem shall be warranted for a period of 1 year from the date of acceptance.
- The modem shall be provisioned, programmed and tested prior to shipping.

7.87 Installation

7.87.1 Contractor Responsibilities

- The Contractor is responsible for carrying out the provisions of the contract at all times. Any work or item that is, at any time, found to be in non-conformance with Specifications or not in compliance with the Contract Drawings shall be subject to such corrective measures as directed in writing by the Engineer.
- The Contractor shall designate a duly authorized superintendent whose sole responsibility shall be managing and coordinating the Contract. The superintendent shall give constant personal attention to the work while it is in progress. The superintendent shall be a competent and reliable superintendent who can communicate technically, and have authority to act for the Contractor. It shall be the Engineer's option to require the replacement of the superintendent if that individual is unreliable or does not adequately progress the work. The Contractor shall, at all times, employ labor and equipment, which shall be sufficient and adequate to prosecute the work in a complete and timely manner. All workers must have sufficient skill and experience to properly perform the work assigned to them. The Engineer shall have the ability to have the Contractor remove from this project any person creating a disturbance to the project or deemed by the Engineer unfit to perform the work.
- Under the Contract, the Contractor shall be required to do all work enumerated under the different items of the contract and, in addition to this, shall be required to protect all properties, all utilities and existing facilities within and adjacent to the work and to repair or replace any such properties, utilities and facilities damaged or destroyed by the Contractor's construction operations.
- The Contractor shall be responsible for the coordination of the work of his various subcontractors. Their respective operation shall be arranged and conducted so that delays and conflicts will be avoided. The Contractor shall ultimately bear the responsibility to progress all of the work in an efficient, continuous and workmanlike manner.
- In order to insure compatibility between the components, the camera, environmental enclosure, zoom lens, PTZ mounting, and Receiver Junction Box electronics, must all be integrated by an experienced video system engineering firm.
- The integrator must have at least five (5) full time factory-trained and certified technicians and/or engineers who are rated for the components to be utilized. The video supplier shall be able to provide on-site service anywhere in New York within eight (8) hours notice. The video supplier shall accept full warranty responsibility and regular support service for the complete CCTV package.
- The Contractor shall be responsible for installation of the required system components and communication equipments in the field and on Traffic Management Center (TMC) to provide a fully operational system.

7.87.2 Supplementary Drawings

When, in the opinion of the City's Engineer, it becomes necessary to more fully explain the work to be done, or to illustrate the work further, or to show any changes which may be required, drawings known as supplementary drawings and specifications known as supplementary specifications will be prepared by the Engineer. Four (4) prints of each of these drawings and four sets of these specifications will be furnished to the Contractor.

These supplementary drawings and specifications shall be binding upon the Contractor with the same forces as the Contract Drawings and specifications.

7.87.3 Specifications/Drawings

The following NYCDOT documents are hereby made a part of this contract:

The City of New York, Department of Transportation, Division of Traffic Operations, Street Lighting Section, Specifications - 1992 Edition.

The City of New York, Department of Transportation, Division of Traffic Operations, the Chief Transportation Officer Traffic Engineering Section, Specifications - March 1995 Edition. [Also referred to as "Division of Traffic Operations and Signals Standard Specifications ("Traffic Blue Book") which details all the bid items in the contract.]

The City of New York, Department of Transportation, Division of Traffic Operations, Street Lighting Section, Standard Drawings - 1992 Edition.

The City of New York, Department of Transportation, Standard Highway Specifications - November 2010 Edition.

All other specifications and drawings to be provided by the NYCDOT.

At the end of the project and after the final field inspection and for each mounted location, the Contractor shall provide as-built drawings for the use of the City of New York.

7.87.4 Item Quantities

The item quantities indicated in the Distribution of Quantities and the bid schedule are estimates only, subject to final verification by Engineer.

7.87.5 Contractor to Verify Dimensions

The Contractor shall verify all dimensions and details shown on the Contract Drawings or other data received from NYCDOT and shall notify the Engineer in writing of all omissions, conflicts, and discrepancies found therein. Notice of such errors shall be given before the Contractor proceeds with the work.

7.87.6 Record of Work Done

The Contractor shall maintain an accurate record of the work as actually performed during the progress thereof. Before final payment, the contractor shall furnish to the engineer, within thirty (30) consecutive calendar days after completion of the work at each intersection, subject to his approval, one (1) complete set of drawings in ink on tracing cloth showing all of the work and locations thereof as actually installed, expect that if signs are installed, the engineer may expect at his discretion tabulation's showing the location and type of mountings of each sign. Record drawings shall be the same size as the Contract Drawings.

The Contractor may avail himself of the opportunity of securing at his own expense a set of photographic reproductions on cloth made from the tracings of the Contract Drawings, upon which he shall indicate all changes and corrections occurring in the work as actually completed, supplemented by such other drawings made with ink on tracing cloth as may by necessary to indicate all work and locations thereof in detail as actually completed. The Contractor's attention is particularly directed to the necessity of keeping accurate records of all subsurface and concealed work so that the record drawings may contain this information in exact detail and location.

7.87.7 Changed Conditions

If, during the progress of the work, conditions are discovered which make it impossible to produce work in accordance with the best general practice, or shall cause any change in the work from that specified, the Contractor shall refer the matter to the Engineer before proceeding with the work. If the Contractor fails to make such reference to the Engineer the Contractor may proceed at his own risk, and shall such work not be satisfactory to the Engineer the Contractor shall remove and replace it without additional cost to the City.

The City of New York has the right to change the number of locations by up to 10% as needed.

7.87.8 Notice Required for Inspection

The Contractor shall inform the Engineer seventy-two (72) hours in advance of the time and place at which he intends to do work in order that proper arrangement may be made for inspection. The Contractor shall also notify the Director by FAX daily (before 8 am) of the location where crews plan to work.

Monthly meetings with an officer or officers of the company will be set up by the Project Director in order to resolve problems and the scheduling of work, change orders, and equipment deliveries.

7.87.9 Permits

The Contractor shall procure all the necessary permits in the name of NYCDOT for opening sidewalks and pavements. There will be no permit fees charged to the Contractor.

The Contractor at his own expense and in his own name shall obtain all other permits required for this work.

7.87.10 Existing Structures & Utilities

Before doing any work over, under, or near duct lines, vaults, subways, or other subsurface structures, the Contractor shall, at his own expense, make such arrangements for properly removing or protecting such structures during the progress of the work as shall be satisfactory to the owners of the structures. Any damage to such structures shall be immediately reported to the owner and to the Engineer and shall be repaired by the Contractor at his expense to the satisfaction of the owner of the structures.

Location of utilities, public and/or private, indicated as existing and/or to be constructed as shown on the Contract Drawings are approximate only. Their exact location shall be determined in the field. Additional utility lines, whether abandoned or in service, may exist and it shall be the Contractor's responsibility to conduct his operations and take the necessary precautions to prevent interference with or damage to these or other facilities during the course of construction.

In the event the Contractor damages an existing utility service causing an interruption in said service the Contractor shall immediately notify the owner and commence work to restore service and may not cease his work operation until service is restored. All corrective work shall be at the expense of the Contractor and shall be acceptable to the Engineer and the subject utility owner.

It will be the Contractor's responsibility to contact all utility companies that have subsurface installations in the area of work for this contract and direct them to have their facilities marked out prior to commencing excavation.

7.87.11 City Monuments & Marks

The Contractor shall not disturb or excavate within three (3) feet of any City monuments which may be within the limits of, or be disturbed by the work, but shall cease operations at such places until the said monuments have been referenced and reset or otherwise disposed of, except upon special permit from NYCDOT. After permission has been given to remove the monument, the Contractor shall take up and preserve such monuments, and if required, remove same to a point designated by the Engineer.

7.87.12 Cleaning Up

Upon the completion of the work at each location the Contractor shall remove all remaining material and shall leave the area that may have been affected by his operation in a neat condition.

7.87.13 Maintenance of Traffic

The Contractor shall work closely with the Engineer and with City agencies in scheduling construction and equipment installation so as to minimize intersection downtime, uncoordinated traffic signal controller operation, and the attendant inconveniences to both pedestrians and the motoring public. Special permits may be required to be procured by the Contractor that may restrict the times and days that certain work may be performed.

It is incumbent upon the Contractor to schedule his work accordingly. Arrangements shall be made by the Contractor for safe and effective traffic control during the periods that he or she must interrupt normal traffic control provided by the devices installed for that purpose prior to the beginning of his work at a particular intersection.

The Contractor shall use at a minimum, stop signs (furnished by Contractor), traffic enforcement officers (as directed by Engineer and furnished by the City) or temporary controllers and or signals (furnished by contractor) where such action is necessary to maintain safe operation for both pedestrian and vehicular traffic.

The Contractor shall be responsible for obtaining these services. The Contractor shall also be responsible for obtaining from the appropriate City agencies the permission to use these services, and for notifying the agencies about when they will be used.

All city streets used for hauling of materials shall be kept clear of debris and maintained at all times and left in a condition satisfactory to the Engineer. All hauling on city streets shall be subject to the rules and regulations of the City.

The Contractor shall also submit to the Engineer for approval at least two (2) weeks prior to performing the work at the intersection, his plan for maintenance and protection of traffic, including the schedule for downtime of control equipment. Closing sidewalk or travel lanes of the roadway shall be performed by acceptable standard methods compatible with the examples given in the Federal and New York State Manual on Uniform Traffic Control Devices. In preparing the Maintenance and Protection of Traffic plan, the Contractor shall familiarize himself with and shall adhere to all of the rules set forth in the NYCDOT standards, specifications, and other stipulations that may be required by NYCDOT in the performance of this work. The cost of providing maintenance and protection of traffic shall be included in the prices for the individual bid items.

If the Contractor fails over a period of twenty-four (24) hours in adequate maintenance and protection of traffic, the Engineer may order the correction of the adverse conditions by another agency, using hired equipment and personnel for the Contractor's account. These costs shall be deducted from monies due the Contractor on this Contract.

7.87.14 Pole Mount

7.87.14.1 General

- The Contractor shall provide all incidental components, mounting brackets, and cabling required to achieve a fully functional assembly as illustrated in the Contract Drawings and in conformance with NYCDOT standards.
- All equipment and materials used shall be standard components, regularly manufactured, regularly utilized in the manufacturer's system.
- All systems and components shall have been thoroughly tested and proven in actual use.
- All systems and components shall be provided with an explicit manufacturer warranty.

7.87.14.2 Requirements

- The pole mount shall be an outdoor unit.
- It shall have a sufficient load rating to support the camera dome system.
- It shall have a cable access hole and be provided with a liquid tight fitting.
- The wall mount shall have a standard 1-1/2 in. NPT-F pipe thread.

7.87.14.3 Mechanical specifications

- Dimensions:
  - Height: < 12".
  - Depth: < 15".
- Weight: < 5lb.
- Construction: Cast aluminum.
- Color: White polyurethane.

7.87.15 Cables

7.87.15.1 Cable Name

This cable shall be called 2c-10 B (breakdown 2c-10 B = 2 number 10-AWG conductors with a third wire for bonding.)

7.87.15.2 Intended use

This cable is to be used for 120 volt power systems in NYC.
The cable shall be rated for 600 volts and have a polyethylene – insulated, jacketed cable for use in underground conduit or for aerial use(must have strain relief's built in for aerial use without a messenger cable). The outer jacket shall be a black in color and be UV resistant and made to endure extreme outdoor usage unprotected without deterioration of insulation or outer jacket fading. This cable shall be rated for direct burial without conduit covering or other protection.

7.87.15.3 Construction

The conductors shall be round annealed copper conforming to ASTM designation B3.
This cable shall be a three (3) conductor type with two (2) number ten (10) AWG wire size conductors one (1) white solid wire and one (1) black solid wire with the third conductor number eight (8) AWG bare stranded wire.

7.87.15.4 Insulation

The insulation shall be a heat-stabilized polyethylene conforming to the requirements of ASTM designation D 1248 for type 1 category 5 grade E4 materials. This insulation shall be concentrically applied about the conductor. This installation shall meet the following

requirements when tested in accordance with the procedures of ASTM designation D 2633 and D 1351.
This cable shall meet all other requirements as listed in the NYC DOT traffic specifications 3/95.

7.87.16 Testing

All CCTV assemblies shall be subject to factory and prototype testing as subsequently described. The CCTV factory test shall be held at a facility in New York which is fully equipped to operate under various lighting levels. The facility shall be equipped with measurement devices which can be utilized to verify that the assembly is compliant with the specifications. The indoor test shall verify that the camera, zoom lens, environmental enclosure, and PT mounting are fully operational and compliant. The PC based diagnostic facility shall be utilized to fully exercise the remote capability of the system. In addition, the test shall simulate various lighting conditions and demonstrate that the assembly is operable at the minimum lux levels required by the specifications. The factory test shall also demonstrate or provide confirmation that all of the equipment operates over the specified environmental range for each component.
The second part of the test shall exercise the camera in an outdoor environment in close proximity to a busy highway. The test shall be conducted in daylight and nighttime conditions. The supplier shall be responsible for submitting a test plan which has been designed to exercise and monitor the equipment for the purpose of determining compliance with the specifications.

7.87.17 System Description

7.87.17.1 General

- The IP video management system shall consist of an advanced suite of network appliances and software designed to provide high quality delivery and processing of IP based video, control and sensor data using standard Ethernet based networks.
- The IP video surveillance system shall be a proven, successful product line with an installed and operating base of systems as applied to Traffic Management Center applications.
- A suite of intuitive graphical user interface software shall manage all IP based video matrix switching and camera control functions, alarm monitoring and control, as well as recording and archive/retrieval management.
- The system design shall include all necessary, high-performance, dual-stream MPEG2/MPEG4 video codecs.
- All camera site signals shall be efficiently compressed and encoded, and delivered onto the network for processing and control by the IP video management software suite.
- The camera system units shall be ruggedly built, and designed for extreme adverse environments, meeting NEMA TS-2 environmental standards.
- The encoder/decoder combinations shall place video and data into one network stream that can be managed from multiple workstations on the users LAN or WAN.
- All system interconnect cables, workstation PC's, PTZ joysticks, and network intermediate devices shall be supplied as required by this system design.
- The video signals shall be transmitted to traffic management center; all cameras shall interface with New York City flow map chart so that the operator at the traffic management center shall have the capability to control the cameras through the transuite system.
- The encoders are connected to an Ethernet switch that is also connected to one of the servers thereby making all the digitized images available to these servers.
- Upon integration of all cameras at TMC, the operators shall have a full control over the operating system.

7.87.17.2 Minimum System Requirement

Major functions which the IP video surveillance system shall support as a minimum include:

- IP video stream routing and display management. Software and hardware decoding is required.
- IP video recording, playback, and event search/retrieval management
- Provide ability for encoder to decoder persistent connection, allowing point to point connections to be established.
- Manual and automatic camera site PTZ control with camera site programming/setup.
- Alarm device I/O monitoring, event logging, and device state control with programmable alarm event actions.
- Allow USB based CCTV control panel/joystick capability.
- Integrate with video processing applications such as facial recognition, video detection, object tracking, etc.
- Provide a comprehensive system device configuration utility application.
- Allow for a centralized or distributed system database.

The full suite of software applications shall include:

- Configuration application, for system devices configuration, database management, and device testing. Included shall be a desktop player for viewing video while testing.
- Graphical User Application, for full system control and operator management. This application shall allow maps and icons to be present for operator interface and control of all system devices, including alarms, relays, video, NAS recording and serial data connection and management.
- Viewer Application shall provide limited control and operator management. This application shall be used for basic operator viewing, PTZ control functions and local recording.

7.87.17.3 Product Specifications

Control Software Requirements:

- Allow user to select any video source to any video destination for routing and display,
    - Allow connection of any video stream for software decoding on any PC video window with an installed application.
    - Allow connection of any video stream for hardware decoding thru selected video decoder.
- Multiple video decoders shall provide simultaneous decoding of any connected video streams.
- The software shall offer live viewing, storing and retrieving of video sequences.
- Provide group video switching of pre-defined video streams routed to any pre-defined video window(s) and decoders with single command.
- Allow automatic group switching sequences to be performed.

(NO TEXT ON THIS PAGE)

S - PAGES

SPECIAL PROVISIONS

NOTICE

THE PAGES CONTAINED HEREIN (S-PAGES) ARE SPECIAL PROVISIONS THAT SHALL APPLY TO AND BECOME A PART OF THE CONTRACT.

(NO TEXT ON THIS PAGE)

TABLE OF CONTENTS

ARTICLE	DESCRIPTION	PAGE NO.
A.	LINES AND GRADES	S-1
B.	SPECIFIC TRAFFIC STIPULATIONS	S-1
C.	HOLIDAY CONSTRUCTION EMBARGO	S-1
D.	N.Y.C. TRANSIT INSURANCE	S-2
E.	CONTRACT ITEMS THAT INCLUDE BACKFILL AS A PART OF THEIR WORK	S-6
F.	NOISE CONTROL	S-6
G.	UNDER-SIDEWALK VAULTS	S-14
H.	SCHEDULING PRESENTATION	S-15
I.	DISPOSAL OF EXCESS EXCAVATED MATERIAL	S-16
J.	CONTRACT ITEMS THAT INCLUDE BACKFILL AS A PART OF THEIR WORK	S-16
K.	SCHEDULING PRESENTATION	S-16
L.	ACCELERATED PROJECT SCHEDULE AND COMBINATION OF STAGES	S-17
M.	NO EXTENSION OF TIME FOR WINTER SHUT-DOWN	S-17
N.	PRIVATE UTILITY HARDWARE ADJUSTMENTS	S-17
O.	RESTRICTED WORKING HOURS	S-17
P.	VEHICLE	S-17
Q.	SURVEY MONUMENTS	S-19
R.	RESTORATION OF ADJACENT AREAS	S-19
S.	USE OF CITY WATER	S-19
T.	FUEL COST	S-19
U.	START OF CONTRACT WORK	S-20
V.	PRICES TO INCLUDE	S-20
	OCMC TRAFFIC STIPULATIONS	S-21
	INTERPRETIVE MEMORANDUM # 2	S-25

(NO TEXT ON THIS PAGE)

SPECIAL PROVISIONS

A. LINES AND GRADES. The Contractor shall furnish lines and grades in accordance with Section 1.06.27 of the NYCDOT Standard Highway Specifications, except that survey controls established for this project may no longer exist and the Contractor shall be required to re-establish the survey control information using official Borough Survey Control Monuments and Bench Marks, where they exist. The Contractor shall check with Topographic Section of the Borough President's Office as to the reliability and accuracy of the data to be used for lines and grades.

B. SPECIFIC TRAFFIC STIPULATIONS. Under this contract, the Contractor shall perform the work in strict accordance with the requirements of Section 6.70 in the Standard Highway Specifications, specific traffic stipulations as called for on the plans, OCMC Traffic Stipulations attached to the end of these Special Provisions, and the directions of the Engineer. In case of a conflict, the Engineer's decision shall be final.

In addition, the cost of compliance with requirements of the OCMC Traffic Stipulations, unless otherwise provided for, shall be deemed included in the prices bid for all scheduled items.

C. HOLIDAY CONSTRUCTION EMBARGO. A special Holiday Construction Embargo shall be in effect on the Friday of the week preceding Thanksgiving Day week from 6:00 AM to 11:59 PM and again from the Monday of Thanksgiving Day week from 6:00 AM through January 2, at 11:59 PM. Roadway and sidewalk construction activities will be restricted during the embargo period on the streets listed below*.

Any permits issued prior to the date of this notice, for work during this embargo period on the streets listed below which do not already have the permit stipulation "410" are hereby suspended for the period noted above. All permittees must comply with this embargo unless a special waiver is granted by OCMC. Waiver requests must be filed at least thirteen days before Thanksgiving Day, in the Permit Office by filing a "Request for Roadway/Sidewalk Permits During "Embargo Periods" and submitting supporting documentation. Waiver requests should only be submitted for critical reasons for a specific project. If a waiver is granted, the applicant will be notified so they can apply for the approved permits. Waivers **are not** required for ongoing Building Construction Activity Permits which already include the "410" permit stipulation. Waiver request forms may be obtained at any Permit Office or on the Department of Transportation's website at: **http://www.nyc.gov/html/dot/downloads/pdf/holidayembapp.pdf**

---

* **Please note that this embargo only applies to NYCDOT construction permits.**
* **List of street and maps of the affected locations are available by borough on the Department of Transportation's website at: http://www.nyc.gov/html/dot/html/motorist/trafalrt.shtml**

Prior to this embargo period all necessary measures must be taken so that all roadways and sidewalks are in proper condition to allow for the expeditious and safe movement of vehicular, bicycle and pedestrian traffic. Tool carts, cable reels, containers, and material stored on roadways must be removed during the embargo period.

The opening of utility access covers is prohibited on any of the streets noted below between the hours of 6:00 AM and midnight unless the utility or Contractor files for an Emergency Authorization Number as required by section 2-07 of the Department of Transportation's Highway Rules. The planned opening of utility access covers may occur during the hours of 12:01 AM and 5:59 AM where no authorization number is required.

Temporary restoration of the streets and sidewalks and removal thereof, if required for the Holiday Embargo period, will be paid for under the appropriate scheduled items.

No extension of time due to the shutdown period will be granted to the Contractor for completion of the work.

D. N.Y.C. TRANSIT INSURANCE. The Contractor (Permittee) shall indemnify and save harmless the City of New York and the New York City Transit (Permittor) in accordance with the following "Insurance Requirements" and proof that the necessary insurance is in effect will be required before work can commence:

NYCT "OUTSIDE CONTRACT" INSURANCE REQUIREMENTS

1. The Permittee at its sole cost and expense shall carry or cause to carried and shall maintain at all times during the period of performance under this Agreement policies of insurance as herein below set forth below:

   (A) Workers' Compensation Insurance (including Employer's Liability Insurance) with limits as specified in Schedule A, which limit may be met by a combination of primary and excess insurance meeting the statutory limits of New York State. The policy shall be endorsed to include Longshoreman's and Harbor Workers' Compensation Act/Maritime Coverage Endorsement and/or Jones Act Endorsement when applicable.

   (B) Commercial General Liability Insurance (I.S.O. 2001 Form or equivalent) approved by Permittor in the Permittee's name with limits of liability as specified in Schedule A for each occurrence on a combined single limit basis for injuries to persons (including death) and damages to property. The limits may be provided in the form of a primary policy or combination of primary and umbrella/excess policy. When the minimum contract amounts can only be met when applying the umbrella/excess policy; the Umbrella/Excess Policy must follow

form of the underlying policy and be extended to "drop down" to become primary in the event primary limits are reduced or aggregate limits are exhausted. Such insurance shall be primary and non-contributory to any other valid and collectable insurance and must be exhausted before implicating any Permittor/MTA policy available.

Such policy should be written on an occurrence form; and shall include:

- Contractual coverage for liability assumed by the Permittee under this agreement;
- Personal and Advertising Injury Coverage;
- Products-Completed. Operations;
- Independent Contractors Coverage;
- "XCU" coverage (Explosion, Collapse, and Underground Hazards) where necessary;
- Contractual Liability Exclusion, applicable to construction or demolition operations to be performed within 50 feet of railroad tracks, must be voided, where necessary; and,
- Additional Insured Endorsement (I.S.O. Form CG 20 26 07/04 version or equivalent) approved the Permittor naming:

  New York City Transit Authority (NYCTA), the Manhattan and Bronx Surface Transit Operating Authority (MaBSTOA), the Staten Island Rapid Transit Operating Authority (SlRTOA), MTA Capital Construction Co., the Metropolitan Transportation Authority (MTA) including its subsidiaries and affiliates, and the City of New York (as Owner).

(C) Business Automobile Liability Insurance Policy - (I.S.O. Form CA 00 01 10 01 or equivalent) approved by the Permittor is required if Permitee's vehicle enters Permittor property. The insurance must be in the name of the Permittee or its contractor entering the Permittor property with limits of liability in the amount specified in Scheule "A" for claims for bodily injuries (including death) to persons and for damage to property arising out of the ownership, maintenance or use of any owned, hired or non-owned motor vehicle.

(D) Railroad Protective Liability Insuranace policy shall be required as specified in Schedule A.

(E) Environmental/Pollution Exposures

In the event environmental or pollution exposures exist, the Permittee shall require the environmental contractor or sub-contactor to provide the applicable insurance covering such exposure. The limits and type of insurance provided shall be satisfactory to the Permittor and will be confirmed to the parties prior to the start of the work.

2. General Requirements Applicable to Insurance Policies

a) All of the insurance required by this Article shall be with Companies licensed or authorized to do business in the State of New York with an A.M. Best Company rating of not less than A-/VII or better and reasonably approved by the *Permittor/MTA and shall deliver evidence of such policies.*

b) Except for Workers Compensation, all references to forms and coverages referred to above shall be the most recent used by the Insurance Services Office, Inc. ("ISO") or equivalent forms approved by the Insurance Department of the State of New York, provided, however, that excess coverages may be written on forms reasonably acceptable to Permittor containing provisions other than those contained in ISO forms but otherwise conforming in substance to the requirements of this Article.

c) The Permittee or its Contractor performing the work shall furnish evidence of all policies before any work is started to the permittor:

For NYCT Contract Inspection
C/O Mr. John Malvasio
Director, MOW Engineering
130 Livingston Street, Room 8044F
Brooklyn, NY 11201
Telephone: (718) 694-1358

These policies must: (i) be written in accordance with the requirements of the paragraphs above, as applicable; (ii) be endorsed in form acceptable to include a provision that the policy will not be canceled, materially changed, or not renewed, unless otherwise indicated herein, at least thirty (30) days prior written notice to the Permittor c/o MTA Risk and Insurance Management (MTA RIM) Department - Standards, Enforcement & Claims Unit, 2 Broadway - 21st floor, New York, NY 10004; and (iii) state or be endorsed to provide that the coverage afforded under the contractor's policies shall apply on a primary and not on an excess or contributing basis with any policies which may be available to the Permttor/MTA, and

also that the contractor's policies, primary and excess, must be exhausted before implicating any Permittor/MTA policy available. (iv) In addition, contractor's policies shall state or be endorsed to provide that, if a subcontractor's policy contains any provision that may adversely affect whether contractor's policies are primary and must be exhausted before implicating any Permittor/MTA policy available, contractor's and subcontractor's policies shall nevertheless be primary and must be exhausted before implicating any Permittor/MTA policy available. Except for Professional Liability, policies written on claims made basis are not acceptable. At least two (2) weeks prior to the expiration of the policies, contractor shall endeavor to provide evidence of renewal or replacement policies of insurance, with terms and limits no less favorable than the expiring policies. Except as otherwise indicated in the detailed coverage paragraphs below, self insured retentions and policy deductibles shall not exceed $100,000, unless such increased deductable or retention is approved by Permittor/MTA. The Permittee shall be responsible for all claim expense and loss payments within the deductible or self-insured retention. The insurance monetary limits required herein may be met through the combined use of the insured's primary and umbrella/excess policies.

d) Certificates of Insurance may be supplied as evidence of policies of the above policies, except for Policy (D) Railroad Protective Liability Insurance Policy. However, if requested by the Permittor, the Permittee shall deliver to the Authority, within forty-five (45) days of be request, a copy of such policies, certified by the insurance carrier as being true and complete. The Railroad Protective Liability Insurance Policy must be provided in the form of the Original Policy. A detailed Insurance Binder may be provided, ACORD or Manuscript Form, pending issuance of the Original Policy. The Original Policy must be submitted to MTA RIM within 30 days of the Binder Approval.

e) If a Certificate of Insurance is submitted, it must: (1) be provided on the Permittor Certificate of Insurance Form or MTA Certificate of Insurance Form for Joint Agency Agreements; (2) be signed by an authorized representative of the insurance carrier or producer and notarized; {3) disclose any deductible, self-insured retention, sub-limit, aggregate limit or any exclusions to the policy that materially change the coverage; (4) indicate the Additional Insureds and Named Insureds·as required herein, along with a physical copy of the Additional Insured Endorsement (I.S.O. Form CG 20 26 07/04 version or equivalent), as applicable and the endorsement(s) must include policy number(s); (5) reference the Contract by number on the face of the certificate; and (6) expressly reference the inclusion of all required endorsements.

f) The minimum amounts of insurance required in the detail description of policies (A), (B), (C), and (D) above shall not be construed to limit the extent of the Permittee's liability under this Agreement.

g) If, at any time during the period of this Agreement, insurance as required is not in effect, or proof thereof is not provided to the Permittor, the Permittor shall have the options to: (1) direct the Permittee to suspend work or operation with no additional cost or extension of time due on account thereof; or (ii) treat such failure as an Event of Default.

E. CONTRACT ITEMS THAT INCLUDE BACKFILL AS A PART OF THEIR WORK. The following shall pertain to all contract items that have backfill as a part of their work: Backfilling shall comply with Subsection 4.11.3 of the Standard Specifications and no additional payment will be made for any Highway or Street Lighting work item requiring Contractor to furnish additional fill material to meet these requirements when backfilling.

F. NOISE CONTROL. The Contractor is directed to Title 24, Chapter 2 of the Administration Code of the City of New York, known as the "New York City Noise Code" by the Department of Environmental Protection. The provisions of this code and its most recent additions and revisions shall apply to this contract. In the event of a conflict between the requirements of the New York City Noise Code and the requirements of Noise Control contained in these special notes, the more stringent of the two shall apply.

The Contractor shall plan and carry out work on this Project to ensure that the noise from construction equipment and activities does not exceed the limits specified herein. The noise abatement operations and conditions specified shall be carried out by the Contractor to limit noise in project and adjacent areas. The Contractor shall conduct a continuous educational effort for the workers on the site to ensure that they are aware of their roles in minimizing noise propagating from the site.

In order to monitor noise abatement operations the Contractor shall employ services of "Noise Control Specialist" for the duration of construction activity. The contractor shall submit qualifications and experience of the prospective specialist/firm to the Engineer for prior approval. The specialist/firm must satisfy the eligibility requirements of qualifications and work experience as required by the N.Y.C.D.E.P.

The monitoring protocol shall be as follows:

(a) There shall be one outdoor and one indoor monitoring station

for each work area or 1,000 ft. of street length whichever is less.

(b) Monitoring of noise level shall be done prior to start of construction and during construction for each station at the same work hours specified in the contract.

(c) Locations of monitoring stations shall be recommended by the noise control specialist for approval of the Engineer.

(d) Engineer shall provide indoor station locations to the contractor after ascertaining availability of the said station from the Community Board.

Should the Contractor fail to carry out the noise abatement operations and conditions specified herein, the Engineer shall have the authority to suspend all work until such time as the Engineer deems that the Contractor has complied with the requirements.

The following additional requirements for noise control shall apply to this contract:

1. Noise Level Requirements for Construction Equipment

(a) The Contractor shall ensure that all Contractor and Subcontractor equipment, of the types listed in Table A to be used on-site for a total duration greater than 5 days, shall be tested for compliance with the stated noise emission limits during the first day of use on the construction site or at an alternative site acceptable to the Engineer.

(b) All equipment as described in (a) above shall be re-tested at 6 month intervals while in use on site.

(c) All compliance tests shall be performed by the Contractor.

(d) For each piece of equipment tested, the Contractor shall provide a noise report to the Engineer as shown in Figure A.

(e) Equipment of the types listed in Table A, as described above, shall not be used on-site without valid certificates of noise compliance.

(f) The Contractor shall provide to the Engineer two noise meters meeting the requirements of Section 2(d) herein. Two acoustic calibrators of the type recommended by the meter manufacturer shall also be provided.

TABLE A

CONSTRUCTION EQUIPMENT NOISE EMISSION LIMITS:
MEASURED AT 50 FEET FROM CONSTRUCTION EQUIPMENT

Equipment Category	Noise Level, dBA(SLOW)
Auger	83
Backhoe	80
Bar Bender	80
Cherry Picker	80
Chain Saw	86
Compactor	80
Compressor	70
Concrete Mixer	86
Concrete Pump	82
Concrete or Diamond Saw	90
Crane	86
Crawler Miller	90
Dozer	86
Front End Loader	80
Generator	82
Gradall	86
Grader	86
Jackhammer	88
Man Lift	80
Mounted Impact Hammer	95
Paver	86
Pneumatic Tools	86
Roller	80
Scraper	86
Shotcrete Liner (tire-mounted)	79
Striper (walk-behind)	80
Tractor	84
Traffic Line Remover	80
Truck (including truck-mounted equipment)	84
Vibrator	80
Vibratory Pile Driver	95
All Other Equipment with Engines Larger than 3750W	86
Impact Pile Driver	105 dBC(FAST)

FIGURE A

CERTIFICATE OF EQUIPMENT NOISE COMPLIANCE

Contractor Name: _____
Contract Name & Number: _____

Equipment Type: _____
Manufacturer & Model Number: _____
Identification Number: _____
Rated Power & Capacity: _____
Operating Condition During Test: _____

Measured Sound Levels at 6 to 15 meters:

Measured Values and Distance:
Engine-Powered or Concrete-Breaking Equipment:
Right Side: _____ dBA(SLOW), at _____meters
Left Side: _____ dBA(SLOW), at _____meters
Impact Pile Driving Equipment:
Right Side: _____ dBC(FAST), at _____meters
Left Side: _____ dBC(FAST), at _____meters

Equivalent Values at 50 Feet Distance:
Engine-Powered or Concrete-Breaking Equipment:
Right Side: _____ dBA(SLOW).
Left Side: _____ dBA(SLOW).
Impact Pile Driving Equipment:
Right Side: _____ dBC(FAST).
Left Side: _____ dBC(FAST).

Maximum Values Allowed for this Equipment: _____dBA(SLOW) at 15 meters
_____dBC(FAST) at 15 meters

If equipment sound level exceeds maximum value allowed, indicate action taken to achieve compliance:

_____

_____

_____

Name, Work Address & Phone No. of NYSDOT Inspector _____

_____

_____

Authorized Signature:_____ Date: _____

CONTRACTOR'S ACCEPTANCE: _____ Date: _____

2. Noise Level Test Procedures of Construction Equipment

(a) All engine-powered equipment shall be operated by the Contractor or Contractor's representative at high idle (maximum governed rpm) under full load conditions during the tests.

(b) Portable and mounted impact hammers, such as hoe rams and jackhammers to be used to concrete breaking, shall be tested during the first day of actual operation at the construction site under maximum load conditions as rated by the equipment manufacturer.

(c) Pile driving equipment shall be tested at the construction site under maximum load conditions as rated by the manufacturer.

(d) All noise certification measurements shall be performed with an instrument that is in compliance with the criteria for a Type 1 (Precision) or Type 2 (General Purpose) Sound Level Meter as defined in the current revision of ANSI Standard S1.4. An acoustic calibrator of the type recommended by the sound level meter manufacturer shall be used prior to all measurements.

(e) If possible, measurements shall be made at 50 feet (±1.5 feet) from the right and left sides of the equipment casing, at a height of 5 feet above ground level, with the equipment operating as indicated in items (a), (b) or (c) above for a minimum period of 1 minute. Measurements made at less than 50 feet, because of space limitations at the test site, shall be reduced by the values given in Table B to estimate the 50-feet sound level.

TABLE B

ADJUSTMENTS FOR CLOSE-IN EQUIPMENT NOISE MEASUREMENTS

Distance (Feet)	Measurement Values to be Subtracted from Measured Sound Level to Estimate Sound Level at 50 Feet (dBA)
20 to under 21	8
21 to under 23	7
23 to under 26	6
26 to under 29	5
29 to under 33	4
33 to under 37	3
37 to under 41	2
41 to under 47	1
47 to under 50	0

3. Compliance with Equipment Noise Level Requirements

(a) The Engineer shall retain a copy of the noise report from the Contractor with each piece of equipment used on the project of the types listed in Table A. The report shall be on the form shown in Figure A with certification by the noise control specialist hired by the contractor that equipment noise emissions do not exceed those prescribed.

(b) If the noise levels obtained during the tests exceed those specified in Table A the Contractor shall promptly modify or alter such equipment and retest, or substitute other equipment to meet the noise level requirements.

(c) Upon compliance, (including the certification date and equipment identification number) the Engineer will keep the noise reports readily available on file in the Construction field office for inspection upon request.

(d) The Certification of Noise Compliance will remain valid for a period of 6 months only. Delays caused by certification refusal or by time lost in improving the rejected equipment or finding alternate acceptable equipment shall not be a basis for any monetary or time delay claims or for avoidance of late completion penalties.

(e) All equipment shall be subject to spot noise level testing by the Engineer at his discretion as necessary to determine that the equipment in use meets the requirements specified in Table A. For this purpose, the Contractor shall furnish noise-measurement instrumentation that complies with the standards specified in paragraph 2.(d). If such tests are requested by the Engineer, the Contractor shall locate and operate the equipment as directed by the Engineer so as to facilitate the measurements. The Engineer shall provide the Contractor with a copy of the results of the measurements. If such tests demonstrate that any equipment does not comply with the requirements specified in Table A, its Certificate of Noise Compliance shall be revoke and equipment shall be taken out of use until compliance is achieved. A new Certificate of Noise Compliance will then be issued.

4. Construction Noise Level Exposure Limits

(a) In no case shall the public be exposed to construction noise levels exceeding 100 dBA (SLOW) or to impulsive noise levels exceeding 125 dBC (FAST).

(b) Construction activities shall be conducted in such a manner that the equivalent noise level (Leq) over any one-hour period does not exceed 85 dBA at any noise-sensitive locations (e.g. residence and hotels).

5. Construction Noise Level Exposure Test Procedures

(a) All noise exposure measurements will be performed with an integrating sound level meter. An acoustic calibrator will be used prior to all measurements.

(b) The measurement microphone of the sound level meter shall be fitted with an appropriate windscreen, and will be located 1.5 meters above the ground and at least 5 feet away from the nearest sound-reflective surface for the tests.

(c) Noise exposure measurements will be taken at noise-sensitive locations closest to the construction activities at least once each week and as dictated by construction activities. Measurement periods at each location shall be a minimum of one hour.

(d) Construction noise exposure measurements will coincide with periods of maximum noise-generating construction activity, and will be performed during the construction phase or activity that the greatest potential to create annoyance or to exceed the noise exposure limits.

6. Compliance with Construction Noise Level Exposure Limits

(a) Construction noise exposure data will be collected by the Contractor on a weekly basis. The noise report will include (1) a sketch indicating the locations of the measurements and of all nearby construction equipment operating during the measurement period, (2) the measured maximum A-weighted noise level at each location, in terms of dBA (SLOW), (3) the measured maximum C-weighted noise level, in terms of dBC (FAST) and (4) the measured one-hour Leq (in dBA).

(b) In the event that the measured noise levels exceed the limits specified in paragraph 4 above, the Engineer will immediately notify the Contractor and the Contractor shall implement corrective actions as directed by the Engineer.

(c) All construction activities will be subject to spot noise level testing by the Engineer at his discretion as necessary to determine that the noise levels meet the exposure limits specified in paragraph 4 above. If such tests demonstrate that the noise levels exceed the specified limits, the Contractor shall implement corrective actions as directed by the Engineer.

7. General Requirements for Construction Equipment Noise Control

(a) The Contractor shall minimize the use of impact devices, such as jackhammers, pavement breakers, and hoe rams. Where

possible, concrete crushers or pavement saws shall be used rather than hoe rams for tasks such as grillage removal and pavement demolition.

(b) All pneumatic impact tools and equipment used at the construction site shall have intake and exhaust mufflers recommended by the manufacturers thereof, to meet relevant noise ordinance limitations.

(c) All impact devices (i.e. jackhammers and pavement breakers) shall be equipped with acoustically attenuating shields or shrouds recommended by the manufacturers thereof, to meet relevant noise ordinance limitations.

(d) Hoppers, conveyors transfer points, storage bins, and chutes shall be line or covered with sound-deadening material.

(e) The Contractor shall minimize the use of air or gasoline-driven hand tools.

(f) All other equipment, including internal combustion engines, shall have mufflers and shield paneling recommended by the manufacturers thereof.

8. General Operational Requirements for Construction Noise Control

(a) The Contractor shall operate equipment so as to minimize banging, clattering, buzzing, and other annoying types of noises, especially near noise-sensitive locations.

(b) The Contractor, to the extent feasible, shall configure the construction site in a manner that keeps noisier equipment and activities as far as possible from noise-sensitive locations and nearby buildings.

(c) The Contractor shall minimize noise from the use of backup alarms near residential buildings by using self-adjusting, ambient noise-sensitive backup alarms that meet OSHA regulations.

(d) In no case shall the above restrictions limit the Contractor's responsibility for compliance with all applicable Federal, state and local safety ordinances and regulations and other sections of these construction specifications.

9. Acoustic Shed Requirements

(a) All noise-generating mechanical equipment that is operated by the Contractor at any time other than weekdays between the hours of 7:00 a.m. and 6:00 p.m. shall be enclosed within an acoustic shed. Such equipment includes, but is not limited

to, generators for traffic sign boards and lighting.

(b) Acoustic sheds shall consist of three-sided, closed-top enclosures, oriented such that the open end of the shed faces away from residential or hotel buildings.

(c) The shed shall be constructed of 0.5 inch plywood sheeting, or other acceptable material weighing at least 1.5 pounds per square foot, on timber framing with no gaps at joints or corners. Gaps between the bottom edge of the shed panels and the ground shall not exceed 1 inch in width and shall be closed off with solid strips of rubber, neoprene or other suitably dense material.

(d) The inside of the shed shall be lined with glass fiber or mineral wool type sound-absorbing material at least 2 inches thick, protected by wire mesh or perforated sheets that have at least 30 percent open area.

10. Cost of Work

(a) The cost of all labor, materials, equipment, insurance necessary for noise abatement measures as described in this section, any necessary modifications of construction methods or equipment and any delays to construction due to work suspension due to non-compliance with noise control requirements or due to necessary modifications to construction methods for compliance with the noise control requirements is deemed included in the prices bid for the items of work for which the equipment is used.

G. UNDER-SIDEWALK VAULTS. The Contractor is hereby advised that under-sidewalk vaults may be present in both sidewalk and roadway areas within the project limits. Where Contractor claims any locations can not be completed because of vaults, he should indicate by which method he has determined vault interference and provide that information to the Engineer.

Prior to any sidewalk excavation, the Contractor shall be responsible to verify the existence of under-sidewalk vaults. The Contractor shall perform visual sidewalk reconnaissance; search for and examine record drawings; gain access to cellars and obtain measurements within vaults; and perform sub-surface radar examination or use other non-destructive methods to locate possible vault structures. Where these above methods of verification are not available to the Contractor, he/she shall then be required to locate the vault envelopes and their roof depth below finished sidewalk grade by drilling holes (at no direct payment), or by Test Pits, under Item No. 9.00 C, as directed by the Engineer.

The Contractor shall be liable for any damage to the under-sidewalk building vaults and/or its contents and/or occupants due to his failure to verify the pre-existing vault condition.

Vault records may be available from the following (or other) sources:

A- DEPARTMENT OF TRANSPORTATION, BUREAU OF HIGHWAY OPERATIONS, PERMIT SECTION, 55 WATER STREET, CONCOURSE LEVEL,NEW YORK, NEWYORK 10041
B- NEW YORK CITY DEPARTMENT OF BUILDINGS
C- NEW YORK CITY BUREAU OF FRANCHISES

Where vault roofs are determined to interfere with construction of standard pedestrian ramps, the Engineer's may approve for construction of, or installation of, non-standard pedestrian ramps, which may include relocation of ramps and/or partial roadway ramps.

An overall field sketch of each corner suspected of having a vault, along with at least one photograph (3" x 3" minimum) of each location, and the results of his/her investigation shall be furnished by the Contractor to the Engineer for review at least ten (10) working days prior to start of work at that respective corner. Said photographs shall be in addition to those required under Item 6.43. Each field sketch shall show measurements of affected areas of vaults, the building line as a reference guide which can be employed to indicate the vault envelope in the sidewalk, the boundaries of the underground structures, curb reveals, and location of proposed pedestrian ramps. No additional payment is to be made for this overall sketch.

Any vault structures punctured by the Contractor's operations shall be repaired by the Contractor to match the existing structure. Said hole in vault structures shall be temporarily repaired with an approved epoxy mortar, or securely steel plated if permanent repairs are not completed prior to the end of that same working day. No holes in vault roofs shall be left unattended at any time.

The Contractor shall also be responsible to replace damaged water proofing directly over vault roofs at his own expense.

H. SCHEDULING PRESENTATION. The Contractor shall submit construction schedule in the form of a bar chart using "Microsoft Project 2010", or in an approved equivalent program which shall be directly and fully translatable into Microsoft Project 2010 format, within seven days of the initial Pre-Construction Meeting. Each bar in the chart shall show dates the Contractor plans to start and complete each construction activity after the initial Pre-Construction Meeting. Bar chart shall show the order and interdependence of all activities necessary to complete the work and the sequence in which activity is to be accomplished as planned by the Contractor and in

accordance with all subcontractors or suppliers whose work shall be shown on the bar chart. The Contractor shall submit the bar chart for the Engineer's review and revise it, if required, until approved by the Engineer.

The Contractor shall submit weekly progress status update reports or as otherwise directed by the Engineer. The Contractor shall submit updated bar chart every month. The revised bar chart shall be made in the same form and detail as the original submittal and shall be accompanied by an explanation of the reasons for the revisions all of which shall be subject to approval by the Engineer.

I. DISPOSAL OF EXCESS EXCAVATED MATERIAL. All excess excavated material, with the exception of contaminated material, shall become the property of the Contractor and shall be properly disposed of away from the site, at the Contractor's expense. Contaminated material shall be disposed of separately in accordance with contract requirements.

J. CONTRACT ITEMS THAT INCLUDE BACKFILL AS A PART OF THEIR WORK. The following shall pertain to all contract items that have backfill as a part of their work: Backfilling shall comply with Subsection 4.11.3 of the Standard Specifications and no additional payment will be made for any Highway or Street Lighting work item requiring Contractor to furnish additional fill material to meet these requirements when backfilling.

K. SCHEDULING PRESENTATION. The Contractor shall submit construction schedule in the form of a bar chart using "Microsoft Project 2010", or in an approved equivalent program which shall be directly and fully translatable into Microsoft Project 2010 format, within seven days of the initial Pre-Construction Meeting. Each bar in the chart shall show dates the Contractor plans to start and complete each construction activity after the initial Pre-Construction Meeting. Bar chart shall show the order and interdependence of all activities necessary to complete the work and the sequence in which activity is to be accomplished as planned by the Contractor and in accordance with all subcontractors or suppliers whose work shall be shown on the bar chart. The Contractor shall submit the bar chart for the Engineer's review and revise it, if required, until approved by the Engineer.

The Contractor shall submit weekly progress status update reports or as otherwise directed by the Engineer. The Contractor shall submit updated bar chart every month. The revised bar chart shall be made in the same form and detail as the original submittal and shall be accompanied by an explanation of the reasons for the revisions all of which shall be subject to approval by the Engineer.

L. ACCELERATED PROJECT SCHEDULE AND COMBINATION OF STAGES. Contractor shall plan and/or stage his/her work schedule using all hours/days available. Contractor is advised that all applicable unit prices shall include, for the purpose of this contract, all overtime costs, premium time costs, shift differentials required to complete construction within the specified "Time(s) of Completion" stipulated in this contract.

Contractor shall be permitted to accelerate this project, to combine stages and/or work sequences. Any such changes shall be shown in the construction schedule, to be furnished in accordance with the General Provisions of the Standard Specifications and the above "SCHEDULING PRESENTATION" Article, and shall be submitted for approval of the Engineer.

M. NO EXTENSION OF TIME FOR WINTER SHUT-DOWN. Where the Contractor's approved work schedule for installing sidewalk, curb, roadway base and/or pavement falls within the winter period of December 1st through April 1st, the Contractor will NOT be granted an extension of time for completion of this contract due to the winter shut-down period, unless otherwise provided in Schedule A.

N. PRIVATE UTILITY HARDWARE ADJUSTMENTS will be performed by the owning utility company or its agent, at its expense. The Contractor shall notify the utility company 72 hours prior to start of work at each location where its hardware requires adjustment.

O. RESTRICTED WORKING HOURS. Construction activities shall be restricted to the work schedules specified in the Traffic Stipulations provided at the end of these Special Provisions. Prior to undertaking any construction activities near the schools, work shall be scheduled in consultation with the school authorities and with the approval of the Engineer. No extension of time will be granted to the Contractor, for completion of this contract due to restricted working hours.

P. VEHICLE. The Contractor shall be required to furnish one (1) vehicle to be used by Department of Design and Construction (DDC) personnel as assigned by the Deputy Commissioner of the Department, during the life of the Contract. No direct payment will be made for the vehicle, or associated costs. All costs shall be deemed to be included in all scheduled items

The Contracted vehicle shall be a new small SUV hybrid vehicle as approved by DDC's Director of Fleet Administration; and shall be equipped with a standard equipment package, and meet the following minimum specification:

1. Engine: Manufacturer's Standard 4 cylinder.
2. Transmission: Automatic.
3. Drive: Manufacturer's Standard 4 wheel drive.
4. Steering: Power.

5. Air Conditioning.
6. Body: 4 Doors.
7. Color: Manufacturer's Standard White.
8. Mirror: Left and Right.
9. Radio: AM/FM.
10. Electric Rear Defogger.
11. Brakes: Anti-Lock.
12. Air Bag: Dual
13. Anti-theft device (optional).
14. Power Windows and Locks.
15. Two sets of keys.
16. GPS navigation.
17. Hands-free telecommunication technology.
18. Fire Extinguisher.
19. First Aid Kit.
20. Any additional equipment will not be accepted by DDC.

The Contractor shall provide fuel, oil, proper maintenance, tires and replacement parts, to keep the vehicle in a safe operating condition, and shall undertake all repairs, including repairs arising from vandalism, accidents, or other damages. A Gas Company Card shall be furnished with each vehicle for fueling purposes. In the event that the vehicle requires maintenance or repairs which cannot be completed the same day, a comparable replacement vehicle shall be provided while the vehicle is out of service. If the vehicle is lost or stolen, the Contractor shall replace the vehicle within 5 business days with a comparable vehicle.

The vehicle shall be provided for the entire duration of this Contract, and shall be returned to the Contractor within thirty days after final acceptance of work or twelve months after substantial completion, whichever comes first. Contractor owned/leased vehicle provided pursuant to this Contract shall remain the property of the Contractor/ Leaser throughout the Contract period; shall be registered in the City's name. If leased vehicle are provided, the Contractor shall obtain from the leasing company the necessary documents allowing the vehicle to be registered as an official City of New York vehicle. The Contractor shall provide insurance for vehicle as set forth in Schedule A.

Within five (5) business days of receipt of notice to provide specified vehicle, the Contractor shall make the vehicle available for inspection by Fleet Administration. Upon determination by Fleet Administration that the vehicle satisfies requirements, the Contractor shall make arrangements through DDC's Fleet Administration for delivery to the DDC. The Contractor shall submit to Fleet Administration a signed MV-82 Part 10 authorizing registration in the City's name together with, in the case of a previously unregistered vehicle, the manufacturer's certification of origin or, in the case of a currently registered vehicle, a copy of the title.

All required transmittals to Fleet Administration shall be made as follows:

Agency Fleet Administrator
NYC Department of Design and Construction
30 - 30 Thomson Avenue, 4th Floor
Long Island City, New York 11101
Telephone No.: (718) 391-1852

When vehicle are no longer required under this contract, as described above, they shall be de-registered by the City and promptly returned to the Contractor.

Q. SURVEY MONUMENTS. When working in the vicinity of survey monument the Contractor shall hand excavate per Item 8.02 A and 8.02 B at City Survey Monuments, for a distance of five (5) feet around each monument, as directed by the Engineer.

R. RESTORATION OF ADJACENT AREAS. The Contractor shall be required to remove all form work. In planting strip areas, the Contractor shall be required to restore areas damaged as a result of his operations, to the satisfaction of the Engineer, with sod. The Contractor shall also, as directed by the Engineer, make safe adjacent areas to his work, such as: restoring missing or damaged pavement markings that were removed or damaged as a result of the Contractor's operations (as per requirements of Section 6.44 in the Standard Specifications); resetting granite blocks in tree pits; and, applying asphaltic concrete mixture (Item 4.02 CB) where badly broken sidewalk or curb may create a dangerous condition just outside his area of operation, where and when directed by the Engineer.

All restoration work shall be done to the satisfaction of the Engineer.

S. USE OF CITY WATER. The Contractor is notified that for use of City water under this project the Contractor shall be required to obtain a water use permit from the Department of Environmental Protection at the Contractor's own cost.

T. FUEL COST. The Contractor is notified that the fuel cost per gallon used in the formula under Sub-Article 26.2.8 of the Standard Construction Contract for **Extra Work** will be derived from the fuel price index for the United States East Coast published weekly by the United States Energy Information Administration ("USEIA"), and available on its website at http://www.eia.gov/petroleum/gasdiesel/. The USEIA-published cost per gallon for the applicable fuel on the East Coast for the week in which the first day of each calendar quarter during the contract term occurs (i.e., January 1st, April 1st, July 1st and September 1st) will be used in the reimbursement formula for all **Extra Work** invoiced that was performed during that calendar quarter. Should the USEIA stop

publishing this fuel price index, the fuel cost per gallon will be determined by reference to a substitute index to be agreed upon by the Contractor and the City.

U. START OF CONTRACT WORK. The Contractor is notified that a Notice To Proceed (NTP) date will be issued for work to commence within 21 to 30 Days of Contract Registration.

V. PRICES TO INCLUDE. No direct payment will be made for costs incurred in complying with the foregoing Special Provisions, unless otherwise provided. Said costs will be deemed to have been included in the prices bid for all the scheduled contract items.

Department of Transportation

POLLY TROTTENBERG, Commissioner

OCMC TRAFFIC STIPULATIONS **JUNE 27, 2016**

OCMC FILE NO: **BXEC 16-289**
CONTRACT NO: **HWXP136B**
PROJECT: **Grand Concourse Service Roads –Reconstruction including Resurfacing of the Main Roadway and Widening of the Medians From East 171 Street to East 175 Street.**

LOCATION(S): **Bronx**

PERMISSION IS HEREBY GRANTED TO THE **NEW YORK CITY DEPARTMENT OF DESIGN AND CONSTRUCTION** AND ITS DULY AUTHORIZED AGENT, TO ENTER UPON AND RESTRICT THE FLOW OF TRAFFIC AT THE ABOVE LOCATION(S) FOR THE PURPOSE OF CARRYING OUT THE ABOVE NOTED PROJECT, SUBJECT TO THE STIPULATIONS, AS NOTED BELOW:

A. SPECIAL STIPULATIONS

1. **EMBARGOES** – A CONSTRUCTION EMBARGO WILL APPLY TO THOSE LOCATIONS BELOW WHICH FALL WITHIN THE **HOLIDAY EMBARGO** OR ANY OTHER SPECIAL EVENT EMBARGOES SUCH AS THE **{OTHER EMBARGOES IF APPLICABLE}** AS PUBLISHED BY THE BUREAU OF PERMIT MANAGEMENT AND CONSTRUCTION CONTROL.
2. **BIKE LANES** – IF WORK IS IN OR AFFECTING A BIKE LANE, THE PERMITTEE MUST POST ADVANCE WARNING SIGNS 350 FEET AND 200 FEET PRIOR TO THE WORK ZONE STATING **"CONSTRUCTION IN BIKE LANE AHEAD PROCEED WITH CAUTION"**, AND ALSO POST A SIGN AT THE WORK ZONE STATING **"CONSTRUCTION IN BIKE LANE PROCEED WITH CAUTION"**. SUCH SIGNS SHALL BE ORANGE, 3' X 3', DIAMOND-SHAPED WITH 4" BLACK LETTERING. SIGNS SHALL BE POSTED IN ACCORDANCE WITH THE FEDERAL MANUAL ON UNIFORM TRAFFIC CONTROL DEVICES (MUTCD).
3. **BIKE SHARE STATIONS**: THE PERMITTEE SHALL NOT REMOVE, RELOCATE, DAMAGE OR DISRUPT THE OPERATION OF EXISTING BIKE SHARE STATIONS WITHOUT FIRST CONTACTING NYC BIKE SHARE AT 855-245-3311 FOR THEIR REQUIREMENTS PRIOR TO COMMENCING WORK.
4. **BUS STOPS** – THE PERMITTEE SHALL PROVIDE WRITTEN NOTICE TO NYC DOT OCMC AND NEW YORK CITY TRANSIT (NYCT) A MINIMUM OF FIVE (5) WEEKS IN ADVANCE FOR LANE/STREET CLOSURES THAT AFFECT BUS ROUTES/BUS STOPS.
5. **STREET LIGHTS / TRAFFIC SIGNALS**: THE PERMITTEE SHALL NOT REMOVE OR RELOCATE EXISTING STREET LIGHTS OR TRAFFIC SIGNALS WITHOUT FIRST OBTAINING APPROVAL FROM NYCDOT STREET LIGHTING / TRAFFIC SIGNALS UNIT.
6. **TRAFFIC CAMERAS, DETECTION/COMMUNICATION EQUIPMENT**: IF AT ANY TIME DURING THE APPROVED WORK, THE PERMITTEE ENCOUNTERS TRAFFIC SURVEILLANCE CAMERAS, DETECTION EQUIPMENT OR ANY TYPE OF COMMUNICATION EQUIPMENT (WIRELESS OR HARD-WIRED) ON ANY NYC DOT FACILITY, THAT IS NOT INCLUDED ON THE DESIGN/BUILD DRAWINGS, THE PERMITTEE SHALL IMMEDIATELY NOTIFY NYC DOT TRAFFIC MANAGEMENT BY PHONE AT 718-433-3390 OR 718-433-3340 AND VIA EMAIL AT TMC@DOT.NYC.GOV AND AWAIT DIRECTION PRIOR TO CONTINUING WORK.
7. **METERS** – THE PERMITTEE SHALL NOT REMOVE OR RELOCATE PARKING METERS WITHOUT FIRST OBTAINING APPROVAL FROM NYCDOT PARKING METER DIVISION AT 718-894-8651.
8. **TEST PITS** – THE BELOW TRAFFIC STIPULATIONS DO NOT APPLY TO TEST PIT WORK RELATED TO THIS CONTRACT. WORK HOURS AND OTHER REQUIREMENTS FOR TEST PIT OPERATIONS MAY DIFFER FROM THE STIPULATIONS IDENTIFIED BELOW. THE PERMITTEE SHALL BE REQUIRED TO OBTAIN SEPARATE PERMITS RELATED TO TEST PITS.
9. **TEMPORARY PARKING REGULATIONS/PAVEMENT MARKINGS** – THE PERMITTEE IS REQUIRED TO INSTALL, MAINTAIN AND REMOVE ALL NECESSARY TEMPORARY PARKING AND REGULATORY SIGNS AND PAVEMENT MARKINGS, AND RESTORE THEIR ORIGINAL CONDITION PER NYC DOT STANDARDS, PRIOR TO EXPIRATION OF THEIR PERMITS. THE PERMITTEE OR AGENCY PERFORMING PUBLIC OUTREACH SHALL POST AND MAINTAIN ADVISORY SIGNS A MINIMUM OF 48 HOURS PRIOR TO CHANGING EXISTING PARKING REGULATION SIGNS TO APPROVED TEMPORARY CONSTRUCTION PARKING REGULATION SIGNS. THE ADVISORY SIGNS SHOULD BE POSTED ON ALL POLES AND DRIVE RAILS ON THE SEGMENT AFFECTED, INDICATING THE DATE OF THE CHANGE, THE NEW REGULATIONS AND A TELEPHONE NUMBER TO OBTAIN MORE INFORMATION.
10. **ACCESS TO ABUTTING PROPERTIES** – THE PERMITTEE SHALL COORDINATE ALL ACTIVITIES WITH ABUTTING PROPERTY OWNERS TO ENSURE ACCESS IS PROVIDED TO/FROM ENTRANCES/DRIVEWAYS AT ALL TIMES.
11. **AUTHORIZED PARKING** – PRIOR TO PERFORMING WORK WHICH IMPACTS AUTHORIZED PARKING, THE PERMITTEE SHALL SUBMIT IN WRITING, AND COPY OCMC-STREETS, A REQUEST TO OCCUPY SPACE CURRENTLY USED BY AUTHORIZED VEHICLES. APPROVAL MUST BE RECEIVED FROM AUTHORIZED PARKING PRIOR TO OCCUPYING THESE AREAS.

NYC Department of Transportation
Bureau of Permit Management and Construction Control
30-30 Thomson Avenue – 2nd Floor South
Long Island City, NY 11101
T: 212.839.9621 F: 718.391.3631
www.nyc.gov/dot

12. **NOTIFICATION** – THE PERMITTEE MUST AT LEAST TWO (2) WORKING DAYS BEFORE THE START OF CONSTRUCTION NOTIFY THE NYC FIRE DEPARTMENT, NYC POLICE DEPARTMENT, NYCEMS, LOCAL COMMUNITY BOARD, BOROUGH PRESIDENT'S OFFICE-CHIEF ENGINEER, NYCDOT OCMC OFFICE, AND ALL ABUTTING PROPERTY OWNERS.
13. **CONSTRUCTION INFORMATIONAL SIGNS** – THIS PROJECT REQUIRES A CONSTRUCTION PROJECT INFORMATIONAL SIGN (CPIS) IN ACCORDANCE WITH NYCDOT HIGHWAY RULE SECTION 2-02 (4) AND (5). CRITERIA AND A PROTOTYPE FOR THIS SIGN MAY BE FOUND ON THE NYCDOT WEBSITE AT:

   HTTP://WWW.NYC.GOV/HTML/DOT/DOWNLOADS/PDF/DOT_CPIS_DIRECTIONS.PDF

14. **ENHANCED MITIGATIONS**
   - NYPD TRAFFIC AGENTS ARE REQUIRED FOR THIS PROJECT: (3) POSTS PLUS RELIEF (MONDAY TO SATURDAY) ON POST FROM 6 AM TO 6 PM.
   - ENHANCED MITIGATIONS FOR PEDESTRIAN FLOW, INCLUDING METAL FENCING, SHALL BE PROVIDED TO ENSURE PEDESTRIANS STAY WITHIN THEIR DESIGNATED PATH/ROUTE. FLAGGERS SHALL BE PROVIDED TO ASSIST WITH PEDESTRIANS AT THE DESIGNATED CROSSWALK AREAS. THESE FLAGGERS SHALL BE ASSIGNED TO THIS FUNCTION ONLY.
   - VARIABLE MESSAGE SIGNS (VMS) SHALL BE PROVIDED FOR THIS PROJECT. THE LOCATIONS AND MESSAGES SHALL BE RECOMMENDED BY NYCDDC AND THEIR CONTRACTOR A MINIMUM OF TWO (2) WEEKS PRIOR TO WORK COMMENCING, FOR OCMC REVIEW AND APPROVAL.
   - "NO STANDING ANYTIME-TEMPORARY CONSTRUCTION" SIGNS AND TEMPORARY PAVEMENT MARKINGS SHALL BE INSTALLED AND MAINTAINED AS WARRANTED BY THE MAINTENANCE AND PROTECTION OF TRAFFIC (MPT) REQUIRED TO FACILITATE TRAFFIC MOVEMENTS THROUGH THE WORK ZONE. ALL TEMPORARY SIGNS AND PAVEMENT MARKINGS SHALL BE REMOVED UPON COMPLETION OF THE PROJECT.
   - COMMUNITY OUTREACH SHALL BE PROVIDED FOR THE DURATION OF THE PROJECT.

B. MAINTENANCE AND PROTECTION OF TRAFFIC FOR THE RECONSTRUCTION INCLUDING RESURFACING OF THE MAIN ROADWAY AND WIDENING OF THE MEDIANS FROM EAST 171 STREET TO EAST 175 STREET.

1. **Grand Concourse service roadway between East 171 Street and East 172 Street.**
2. **Grand Concourse service roadway between East 172 Street and Rockwood Street.**
3. **Grand Concourse service roadway between Rockwood Street and Hawkstone Street.**
4. **Grand Concourse service roadway between Hawkstone Street and East Mount Eden Avenue.**
5. **Grand Concourse service roadway between East 172 Street and Mount Eden Parkway.**

- Work hours shall be as follows: 7 am to 6 pm, Monday to Friday.
  8:00 am to 6:00 pm, Saturday.
- Contractors must maintain one 11 ft. lane for traffic and one bicycle lane in the service roadway at all times.
- Contractors must maintain 8 ft. clear on the sidewalk at all times.
- Contractors must work on one side of the street at a time.

6. **Grand Concourse service roadway between East Mount Eden Avenue and East 173 Street.**

- Work hours shall be as follows: 9 am to 4 pm, Monday to Friday.
  8:00 am to 6:00 pm, Saturday.
- Contractors must maintain one 11 ft. lane for traffic and one bicycle lane in the service roadway at all times.
- Contractors must maintain 8 ft. clear on the sidewalk at all times.
- Contractors must work on one side of the street at a time.
- Contractors must coordinate with MTA Buses prior to commencing work.
- Contractors must coordinate with Bronx Lebanon Hospital.

7. **Grand Concourse service roadway between East 173 Street and East 175 Street.**
8. **Grand Concourse service roadway between East Mount Eden Avenue and Morris Avenue.**

- Work hours shall be as follows: 9:00 am to 4:00 pm, Monday to Friday.
  8:00 am to 6:00 pm, Saturday.
- Contractors must maintain one 11 ft. lane for traffic and one bicycle lane in the service roadway at all times.
- Contractors must maintain 8 ft. clear on the sidewalk at all times.
- Contractors must work on one side of the street at a time.
- Contractor must coordinate with NYC DOT Bridges, Con Edison and Human Resources Administration prior to commencing work.

C. GENERAL NOTES

1. **THIS IS NOT A PERMIT**. THIS STIPULATION SHEET MUST BE SUBMITTED WITH ALL REQUESTS FOR PERMITS PERTAINING TO THE ABOVE CONTRACT AND PRESENT AT THE WORK SITE ALONG WITH ALL ACTIVE CONSTRUCTION PERMITS WHEN THE APPROVED WORK IS BEING PERFORMED.
2. THE CONTRACTOR MUST COMPLY WITH ALL CONSTRUCTION EMBARGOS ISSUED BY THE NYCDOT INCLUDING THE HOLIDAY EMBARGO.
3. THE CONTRACTOR SHALL COMPLY WITH ALL REQUIREMENTS OF THE NYCDOT SPECIAL EVENTS UNIT AS IDENTIFIED BELOW:

   A. STREET FAIRS / FESTIVALS
   - ALL EXCAVATIONS MUST BE PLATED WITH SKID RESISTANT PLATES.
   - PLATES MUST BE RECESSED AND FLUSH WITH PAVEMENT.
   - ALL PAVEMENT DEFECTS MUST BE CORRECTED WITHIN OR ADJACENT TO THE WORK ZONE.
   - THE CONTRACTOR IS RESPONSIBLE FOR ANY DEFECTS WITHIN THE IMMEDIATE VICINITY IF NYCDOT STREET & ARTERIAL MAINTENANCE CANNOT MAKE REPAIRS DUE TO PROJECT INTERFERENCE (AS DETERMINED BY NYCDOT).
   - ALL EQUIPMENT, TRAILERS AND MATERIAL STORAGE MUST BE REMOVED.

   B. RUNNING / WALKING / BIKING EVENTS
   - ALL EXCAVATIONS MUST BE BACKFILLED AND PAVED OR PLATES MUST BE RECESSED AND PAVED OVER FLUSH WITH PAVEMENT.
   - ALL PAVEMENT DEFECTS MUST BE CORRECTED WITHIN OR ADJACENT TO THE WORK ZONE.
   - THE CONTRACTOR IS RESPONSIBLE FOR ANY DEFECTS WITHIN THE IMMEDIATE VICINITY IF NYCDOT STREET & ARTERIAL MAINTENANCE CANNOT MAKE REPAIRS DUE TO PROJECT INTERFERENCE (AS DETERMINED BY NYCDOT).
   - ALL EQUIPMENT, TRAILERS AND MATERIAL STORAGE MUST BE REMOVED.

   C. PARADES
   - ALL EXCAVATIONS MUST BE BACKFILLED AND PAVED OR PLATES MUST BE RECESSED AND PAVED OVER FLUSH WITH PAVEMENT.
   - FORMATION AND DISPERSAL AREA PLATES MUST BE RECESSED AND FLUSH WITH PAVEMENT (PLATES MUST BE SKID RESISTANT).
   - ALL PAVEMENT DEFECTS MUST BE CORRECTED WITHIN OR ADJACENT TO THE WORK ZONE.
   - THE CONTRACTOR IS RESPONSIBLE FOR ANY DEFECTS WITHIN THE IMMEDIATE VICINITY IF NYCDOT STREET & ARTERIAL MAINTENANCE CANNOT MAKE REPAIRS DUE TO PROJECT INTERFERENCE (AS DETERMINED BY NYCDOT).
   - ALL EQUIPMENT, TRAILERS AND MATERIAL STORAGE MUST BE REMOVED.

   D. MAYORAL EVENTS
   - ALL EXCAVATIONS MUST BE BACKFILLED AND PAVED OR PLATES MUST BE RECESSED AND PAVED OVER FLUSH WITH PAVEMENT.
   - ALL PAVEMENT DEFECTS MUST BE CORRECTED WITHIN OR ADJACENT TO THE WORK ZONE.
   - THE CONTRACTOR IS RESPONSIBLE FOR ANY DEFECTS WITHIN THE IMMEDIATE VICINITY IF NYCDOT STREET & ARTERIAL MAINTENANCE CANNOT MAKE REPAIRS DUE TO PROJECT INTERFERENCE (AS DETERMINED BY NYCDOT).
   - ALL EQUIPMENT, TRAILERS AND MATERIAL STORAGE MUST BE REMOVED.
4. ALL RELOCATION WORK BY THE UTILITIES SUCH AS; CON EDISON, TELEPHONE, GAS AND CABLE COMPANIES SHALL PRECEDE THE CONTRACTORS' START OF WORK ON ALL AFFECTED ROADWAYS IN THE IMPACTED CONTRACT AREA.
5. THE CONTRACTOR IS ADVISED THAT OTHER CONTRACTORS MAY BE WORKING IN THE GENERAL AREA DURING THE TERM OF THIS STIPULATION. IN WHICH EVENT, THE CONTRACTOR MAY REQUIRE MODIFICATIONS BY THE OCMC-STREETS.
6. THE PERMITTEE IS NOT AUTHORIZED TO ENTER, OCCUPY OR USE ANY PUBLICLY-OWNED OR PRIVATELY OWNED, NON-PAVED, LANDSCAPE OR NON-LANDSCAPED LOCATION WITHOUT SPECIFIC WRITTEN PERMISSION. WHEN THE LOCATION IS WITHIN THE RIGHT-OF-WAY OF A LIMITED-ACCESS ARTERIAL HIGHWAY, **WRITTEN** APPROVAL FROM THE NYCDOT OCMC-HIGHWAYS IS REQUIRED. WHEN THE LOCATION IS WITHIN THE RIGHT-OF-WAY OF A PUBLIC STREET OR PUBLIC PARK, **WRITTEN** APPROVAL FROM THE NEW YORK CITY DEPARTMENT OF TRANSPORTATION OR NEW YORK CITY DEPARTMENT OF PARKS AND RECREATION IS REQUIRED. WHEN THE LOCATION IS WITHIN THE RIGHT-OF-WAY OF ANY OTHER JURISDICTION SUCH AS PRIVATE PROPERTY, STATE, FEDERAL ETC., IT IS THE PERMITTEE'S RESPONSIBILITY TO DETERMINE THE PROPERTY OWNER AND OBTAIN THE WRITTEN APPROVAL.

7. THE PERMITTEE SHALL ADHERE TO THE NYCDOT BUREAU OF BRIDGES' SPECIAL PROVISIONS FOR LANDSCAPE PROTECTION, MAINTENANCE AND RESTORATION, ITEMS 1.18.15 THROUGH 1.18.19, WHENEVER AND WHEREVER ANY OF THE PERMITTEE'S ACTIVITIES OCCUR WITHIN A LIMITED ACCESS ARTERIAL HIGHWAY RIGHT - OF - WAY.
8. NO DEVIATION OR DEPARTURE FROM THESE STIPULATIONS WILL BE PERMITTED WITHOUT THE PRIOR WRITTEN APPROVAL FROM THE OCMC-STREETS. REQUEST FOR SUCH MODIFICATIONS SHALL BE SUBMITTED TO THE OFFICE OF THE OCMC-STREETS, NEW YORK CITY DEPARTMENT OF TRANSPORTATION, A MINIMUM OF TWENTY (20) DAYS IN ADVANCE FOR CONSIDERATION.
9. FOR ANY CONSTRUCTION ACTIVITY RESULTING IN THE FULL CLOSURE OF A ROADWAY FOR MORE THAN 180 CONSECUTIVE CALENDAR DAYS, THE CONTRACTOR MUST PRODUCE AND SUBMIT A COMMUNITY REASSESSMENT, IMPACT AND AMELIORATION (CRIA) STATEMENT TO NYCDOT PLANNING AND OBTAIN THEIR APPROVAL BEFORE APPLYING FOR PERMITS, IN COMPLIANCE WITH THE PROVISIONS OF **LOCAL LAW 24 STREET CLOSURE LAW.**
10. FOR THIS PROJECT THE CONTRACTOR SHALL FURNISH, INSTALL AND MAINTAIN ALL NECESSARY ADVANCE WARNING AND DETOUR SIGNS, TEMPORARY CONTROL DEVICES, BARRICADES, LIGHTS AND FLASHING ARROW BOARDS IN ACCORDANCE WITH THE "MANUAL ON UNIFORM TRAFFIC CONTROL DEVICES," THE TYPICAL SCHEMES INCLUDED IN THIS SPECIFICATION; AND AS ORDERED BY THE ENGINEER-IN-CHARGE AND THE OCMC-STREETS.
11. THE CONTRACTOR SHALL BE RESPONSIBLE FOR IDENTIFYING HIS CONSTRUCTION SIGNAGE. THE IDENTIFICATION SHALL INCLUDE THE CONTRACTOR'S NAME, SPONSORING AGENCY NAME AND THE CONTRACT NUMBER. THE IDENTIFICATION SHALL BE PLACED ON THE BACK OF THE SIGN. THE LETTERING SHALL BE THREE (3) INCHES HIGH.
12. THE OCMC-STREETS RESERVES THE RIGHT TO VOID OR MODIFY THESE STIPULATIONS SHOULD CONSTRUCTION FAIL TO COMMENCE WITHIN TWO (2) YEARS OF THE SIGNED DATE OF THESE STIPULATIONS.

GARY SMALLS
DIRECTOR
OCMC-STREETS

SANNY MOHAWK GS 8/16/16

MILAGROS RIVERA
PROJECT MANAGER- BRONX
OCMC-STREETS

THE CITY OF NEW YORK Department of Sanitation

S. ELIZABETH SEARLE
Assistant Commissioner
for Legal Affairs

Bureau of Legal Affairs
44 Beaver Street
New York, NY 10004
Telephone (212) 837-8110
FAX (212) 837-8243

Department of Sanitation Rules and Regulations Governing Non-Putrescible Solid Waste Transfer Stations

INTERPRETIVE MEMORANDUM # 2
February 14, 1995

Subject: Temporary Storage and Processing of Construction and Demolition Debris by New York City Agency Contractors

Contractors performing construction work for New York City agencies may be required to excavate dirt, concrete, rock, gravel and similar materials ("construction materials") from a contract site or to remove from a contract site construction materials resulting from construction, demolition, alteration, repair or renovation of structures, streets or buildings. On street construction projects, construction materials required to be excavated or removed may also include asphalt. The purpose of this Interpretive Memorandum is to (a) define the circumstances under which the Department of Sanitation (the "Department") will not deem its Rules and Regulations Governing Non-Putrescible Solid Waste Transfer Stations (the "Rules") to apply to the temporary storage, processing and/or stockpiling (collectively, "stockpiling") of such construction materials and (b) the procedure for ensuring such exemption. It is the responsibility of the contracting agency to oversee its contractors' compliance with the Rules and with this Interpretive Memorandum.

1. <u>When No Transfer Station Permit is Required</u>

Where a City contractor has:

(a) set aside an area of a contract site for stockpiling construction materials excavated from and/or intended for that site; <u>or</u>

(b) received written approval from the contracting agency for an off-site stockpiling location,

the Department will not deem such stockpiling location a transfer station and will not require the contractor to obtain a transfer station permit so long as:

(c) no construction materials or debris from off the contract site are received at the designated location for subsequent transfer to another location (other than the contract site); <u>and</u>

(d) the temporary stockpiling location is clearly described as such in the contract or clearly approved by the construction agency and designated as such in writing to the Department by the agency; <u>and</u>

(e) the construction agency represents in writing to the Department that such agency will monitor the temporary stockpiling location and ensure its clean-up and restoration pursuant to the procedures set out in this memorandum.

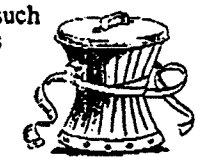

Help Reduce New York's Waste.

printed on recycled paper

Example: Street Construction Projects

As part of a contract for street construction, the contractor may be working at one end of a street and using an area at the other end of the street for the temporary stockpiling of construction materials. Both ends of the street are part of the construction contract site. In addition, the contractor may have leased an off-site location for temporary stockpiling of materials, which, following processing, will be reincorporated into the contract site, with some portion of the remainder designated for delivery to a Department disposal facility. Neither location will be regulated by the Department as a transfer station so long as the procedures set out in this memorandum are followed.

2. Procedure for Exception.

Upon a City construction agency's approval of any location to be designated as a temporary processing, storage or stockpiling area, that agency must determine that (a) its contract with the contractor provides for clean-up and restoration of such area by, for example, the contractor's posting of a restoration bond and/or by contractual set-off and (b) the agency has adequate procedures for monitoring the designated area to ensure that it does not violate the provisions set forth in this memorandum and that such location is cleaned up and restored at the completion of the contract work.

The City construction agency must submit an official letter to the Department acknowledging compliance with both (a) and (b) immediately above and representing that the agency will ensure the contractor's compliance. *The letter to be submitted must be in substantially the following form, addressed to the Director, Bureau of Waste Disposal,* Department of Sanitation, 125 Worth Street, Room 726, New York, NY 10013:

"The New York City Department of _____ (the "Agency") has awarded a construction contract to _____(Contractor)_____ _____ (the "Contractor") for work to be performed at _____(Contract Site)_____.

a. This Agency has approved the following locations to be used by the Contractor for the temporary storage, processing and/or stockpiling of construction materials (the "Stockpiling Locations") excavated from the construction site or intended for the construction site:

_____

_____

_____

_____

b. The terms of the contract require the Contractor to clean up and restore the Stockpiling Locations, whether on or off the contract site, at or before the completion of the contract work.

c. This Agency assumes responsibility for the monitoring of Stockpiling Locations to ensure that only materials received from and/or intended for the construction site are stockpiled at such locations and we will enforce clean-up and restoration of such Locations at the end of their use for temporary stockpiling or at the termination of the contract, whichever occurs earlier, through restoration

bonding requirements and/or contractual set-off provisions such that the costs of clean-up and restoration will not become a charge to the Department or the City. "

3. When a Transfer Station Permit is Required

A transfer station permit will be required under any circumstances other than those outlined above. Except in the specifically defined circumstances set forth in this memorandum, any operator of a location or facility which receives, processes, stores or stockpiles construction and demolition debris or fill material for purposes of transfer to another location, including to a New York City Department of Sanitation facility, and whether or not under contract to the Department for the delivery of such materials, will be fully subject to the Department's transfer station rules and liable for enforcement for violations.

(NO TEXT ON THIS PAGE)

TF-PAGES

TIGER/FHWA FUNDED PROJECTS
TIGER/FHWA FUNDING ATTACHMENTS

(NO TEXT ON THIS PAGE)

TIGER AND FHWA FUNDING ATTACHMENT

THE CITY OF NEW YORK
DEPARTMENT OF DESIGN AND CONSTRUCTION
INFRASTRUCTURE DIVISION
BUREAU OF DESIGN

THIS ATTACHMENT IS HEREBY MADE A PART OF THE CONTRACT DOCUMENTS

1. Any substantial modification of the Contract shall be subject to approval by the State Commissioner of Transportation and the Federal Highway Administration, in addition to the City agencies involved.

2. The Contractor shall be responsible for compliance with all the provisions of the following Schedules of Federal and State requirements which are hereby made a part of the original contract documents and are annexed hereto:

   Attachment "A" – Required Contract Provisions for Federal-Aid Construction Contracts – FHWA 1273

   Attachment "B" – Standard Clauses for New York State Contracts, Labor and Employment

   Attachment "C" – Notice to All Prospective Bidders, Federal-Aid Contracts - Assurance of Non-Discrimination, Subcontracts, Appendix A-1 Supplemental Title VI Provisions (Civil Rights Act)

   Attachment "D" – Disadvantaged Business Enterprise Requirements

   Attachment "E" – "Buy America" Requirements & Waivers

   Attachment "F" - Equal Employment Opportunity Requirements

   Attachment "G" – Standardized Changed Conditions Clauses

   Attachment "H" – Civil Rights Monitoring and Reporting

   Attachment "I" – False Claims Certification, United States Department of Transportation Hotline, New York State Inspector General Hotline

   Attachment "J" – Non-Collusive Bidding Certifications, Debarment History Certification, Lobbying Activity Certification

   Attachment "K" – Provisions Relating to the NYS Labor Law, Prevailing Wages, and the Use of Convict Labor and Materials on Federal & State Contracts

   In addition to compliance with the above Federal and State requirements, the Contractor shall also be required to comply with all City requirements as depicted in the Information for Bidders and Standard Construction Contract herein. Wherever a conflict may exist, the Federal Regulations shall take precedence.

3. The Contractor shall not pay less than the highest minimum hourly rates as set forth by Federal, State or City laws.

4. The Contractor shall maintain his records in conformity with the current NYSDOT "Manual for Uniform Record Keeping", referred to as MURK, copies of which are available on line at the NYSDOT website www.dot.ny.gov/publications.

5. In accordance with 23 US C315 and Order 1321.1C, FHWA Directives Management, issued January 6, 2010, the construction work performed under this Contract shall be available to be subject to inspection at all times by the New York State Department of Transportation and the Federal Highway Administration.

6. Amendments to Information for Bidders:

   a) Refer to Pages 6 and 7, Subsection 21.(C), Rejection of All Bids and Negotiation With All Responsible Bidders;
   Delete Sub-Article 21.(C) and Sub-Article 21.(D) in their entirety and substitute the words "(C) (NO TEXT)." And "(D) (NO TEXT)." respectively.

   b) Refer to Page 9, SECTION 27. Failure to Execute Contract, 6th, 7th and 8th lines;
   Delete the sentence beginning with the words: "No plea of mistake in such . . ." in its entirety.

   c) Refer to Page 10, SECTION 30. Labor Law Requirements, Sub-Article (A) General:
   Add the following at the end of the Sub-Article (A): "This provision shall apply to subcontractors also."

   d) Refer to Page 11, Subsection 33.(B), Variations from Engineer's Estimate;
   Delete Subsection 33.(B) in its entirety. See Attachment "G", Standardized Change Condition Clauses, Sub-Article (3).(iv).(B).

   e) Refer to Pages 12 and 13, SECTION 37. Locally Based Enterprise Requirements (LBE);
   Delete the SECTION, in its entirety. See Attachment "D" Disadvantaged Business Enterprise Utilization Requirements.

7. Amendments to Standard Construction Contract:

   a) Refer to Pages 11 and 12, ARTICLE 7. PROTECTION OF WORK AND OF PERSONS AND PROPERTY; NOTICES AND INDEMNIFICATION;
   Add the following:

   "7.6 In addition to the requirements stipulated herein, all work performed under this Contract shall comply with the safety and health standards of the Occupational Safety and Health Administration (OSHA) of the U.S. Department of Labor."

   b) Refer to Page 13, Sub-Article 9.3;
   Delete the first sentence starting with the words: "If the Contractor . . ." and ending with the words ". . . progress schedule."

   c) Refer to Pages 22 and 23, ARTICLE 16. OCCUPATION OR USE PRIOR TO COMPLETION;
   Delete Sub-Article 16.1.4, in its entirety.

   d) Refer to Pages 23 and 24, ARTICLE 17. SUBCONTRACTS;
   Delete Sub-Article 17.11.1, in its entirety;
   Substitute the following revised Article 17.11.1:

"17.11.1 Payment to **Subcontractors**: The agreement between the **Contractor** and its **Subcontractors** shall contain the same terms and conditions as to method of payment for **Work**, labor, and materials, as are contained in this **Contract**."

e) Refer to Page 26, ARTICLE 19. SECURITY DEPOSIT;
Delete Sub-Article 19.2, in its entirety;
Substitute the following Sub-Article 19.2:

"19.2 If performance and payment bonds are not required, the bid security shall be retained by the **City** as security for the **Contractor's** faithful performance of the Contract. If partial payments are provided, the bid security will be returned to the **Contractor** subject to the other provisions of this **Contract**. If partial payments are not provided, the bid security will be released when final payment is certified by the **City** for payment."

f) Refer to Page 29, ARTICLE 21. RETAINED PERCENTAGE;
Delete Article 21, in its entirety;
Substitute the following:

"**ARTICLE 21. (NO TEXT)**"

g) Refer to Page 36, ARTICLE 24. MAINTENANCE AND GUARANTY;
Delete Sub-Article 24.1 in its entirety;
Substitute the words "24.1 (NO TEXT)".

h) Refer to Page 36, ARTICLE 24. MAINTENANCE AND GUARANTY;
Add the following to Sub-Article 24.9;

"On any contract which requires the furnishing and/or installing of electrical or mechanical equipment, the Contractor shall provide the following:

(1) Manufacturers' warranties or guarantees on all electrical and mechanical equipment, consistent with those provided as customary trade practice.

(2) Contractor's guarantees providing for satisfactory in-service operation of the mechanical and electrical equipment and related components for a period of not less than one (1) year following project acceptance.

(3) On any contract which requires maintenance and guarantee for landscape items including trees, the maintenance and guarantee period shall be twenty-four (24) months."

i) Refer to Page 37, ARTICLE 25. CHANGES;
Add the following paragraph:

"25.5 Extra Work: It is anticipated that the preliminary engineering and the preparation of plans, specifications and contract documents have been performed with sufficient thoroughness, accuracy and care, and that changes and extra work during the construction can be held to a minimum and limited almost exclusively to revisions and additions necessitated by conditions that could not reasonably be anticipated before the project was advertised for bids or force account operations commenced."

j) Refer to Pages 50, 51 and 52, ARTICLE 36. NO DISCRIMINATION;
Change in Paragraph 36.1.1, 4th line, "citizen of the State of New York" to "person";
Delete Paragraphs 36.1.3, 36.1.4, 36.2.2 and 36.2.4 in their entireties;
Add "or sex or age" to the expression "race, creed, color or national origin", and "or sex or age" to the expression "race, color or creed", wherever these expressions appear in Article 36.

k) Refer to Page 59, ARTICLE 43. PROMPT PAYMENT;
Add the following sentence to the end of Sub-Article 43.5:

"The Contractor shall not hold any retainage, but may deduct an amount necessary to satisfy any claims, liens or judgments against a Subcontractor or materialman which have not been fully discharged."

l) Refer to Pages 59 and 60, ARTICLE 44. SUBSTANTIAL COMPLETION PAYMENT;
Delete Sub-Articles 44.2 and 44.3, in their entirety;
Substitute the following:

"44.2 The **Commissioner** shall issue a voucher calling for payment of any part or all of the balance due for **Work** performed under the **Contract**, less any and all deductions authorized to be made by the **Commissioner**, under this **Contract** or by **Law**, and less twice the amount the **Commissioner** considers necessary to ensure the completion of the balance of the **Work** by the **Contractor**. Such a payment shall be considered a Partial and not a Final Payment. No **Substantial Completion** payment shall be made under this Article 44 where the **Contractor** shall fail to complete the **Work** within the time fixed for such completion in the Schedule A of the General Conditions, or within the time to which completion may have been extended, until an extension or extensions of time for the completion of **Work** have been acted upon pursuant to Article 13.

44.3 No further partial payments shall be made to the **Contractor** after **Substantial Completion**, except the **Substantial Completion** payment and **Contractor's** requisition that were properly filed with the **Commissioner** prior to the date of **Substantial Completion**; however, the **Commissioner** may grant a waiver for further partial payments after the date of **Substantial Completion** to permit payments for change order **Work**. Such waiver shall be in writing."

m) Refer to Pages 60 and 61, ARTICLE 45. FINAL PAYMENT;
Delete Sub-Article 45.1, in its entirety;
Substitute the following:

"45.1 After completion and **Final Acceptance** of the **Work**, the **Contractor** shall submit all required certificates and documents, together with a requisition for the balance claimed to be due under the **Contract**. Such submission shall be within 90 days of the date of the **Commissioner's** written determination of **Final Acceptance**, or within such additional time as may be granted by the **Commissioner** in writing. If the **Contractor** fails to submit all required certificates and documents within the time allowed, no payment of the balance claimed shall be made to the **Contractor** and the **Contractor** shall be deemed to have forfeited its right to payment of any balance claimed. A verified statement similar to that required in connection with applications for partial payments shall also be submitted to the **Commissioner**."

n) Refer to Page 67, ARTICLE 59. SERVICE OF NOTICES;
Delete the words "deposited in a post office box regularly maintained by the United States Postal Service in a properly addressed, postage prepaid envelope".

o) Refer to Pages 71, 72 and 73, ARTICLE 64. TERMINATION BY THE CITY;
Delete the text of the 1st paragraph;
Substitute the following:

"64.1 In addition to termination pursuant to any other article of this Contract, the Commissioner may, by written notice, terminate the Contract or any portion thereof after determining that for reasons beyond either Department or Contractor control it is not feasible to proceed with or complete the work as originally contracted for, and that termination would therefore be in the public interest. Such reasons for termination may include, but need not be necessarily limited to, executive orders of the President relating to prosecution of war or national defense, national emergency which creates a serious shortage of materials, orders from duly constituted authorities relating to energy conservation, and restraining orders or injunctions obtained by third-party citizen action resulting from national or local laws or regulations, or where the issuance of such order or injunction is primarily caused by acts or omissions of persons or agencies other than the Contractor, or where the orderly progression of a project is interfered with or delayed by acts or omissions of persons or agencies other than the Contractor. The Contractor specifically understands that the issuance of such notice by the Commissioner shall be conclusive as to its necessity. In such event the Contractor shall upon receipt of such notice:"

p) Refer to Pages 74 and 75, ARTICLE 67. LOCALLY BASED ENTERPRISE PROGRAM;
Delete Article 67, in its entirety, and Substitute the following "ARTICLE 67. (NO TEXT)". See Attachment "H" Disadvantaged Business Enterprise Utilization Requirements.

q) Refer to Pages 75, 76 and 77, ARTICLE 69. MacBRIDE PRINCIPLES PROVISIONS;
Delete Article 69, in its entirety, and Substitute the following "ARTICLE 69. (NO TEXT)"

r) Refer to Page 78, ARTICLE 75. COMPENSATION TO BE PAID TO CONTRACTOR;
Delete Article 75, in its entirety and Substitute the following "ARTICLE 75. (NO TEXT)".

s) Add the following to Pages 92, 93, 94, 95, 96, 97, 98, and 99, PERFORMANCE BOND:

"Prior to or at the time of execution of the contract, successful bidder must deliver to the City of New York an executed bond equal to one hundred percent (100%) of the contract price, to secure the faithful performance of the contract, and an executed bond in an amount equal to one hundred percent (100%) of the contract price, as security for the payment of all persons performing labor or furnishing materials in connection with this contract, prepared on the forms of bonds authorized by The City of New York, and made a part of the contract documents, copies of which are annexed hereto, and having as surety thereunder such surety company or companies as are approved by The City of New York and are authorized to do

business in the State of New York. Premium of such bonds shall be included in the base bid.

In lieu of a performance and completion bond and labor and material bond, a contractor may deposit with the Comptroller, money or obligations of The City of New York which the Comptroller shall approve as of equal value with the amount of the performance and completion bond required.

Whenever a contractor deposits obligations of The City of New York, in lieu of a performance and completion bond and a labor and material bond, it shall be with the understanding that the Comptroller of the City of New York, or his successors, may sell and use the proceeds thereof, for any purpose for which the principal or surety on such bond would be liable under the terms of the contract. If money is deposited with the Comptroller, the Contractor shall not be entitled to receive interest on such money from The City of New York.

If the bidder to whom the contract is awarded refuses to execute it, or fails to furnish the required security and insurance within ten (10) days after receipt of notice to him of the award, the amount of his deposit, or as much thereof as may be applicable to the amount of the award made to him, shall be forfeited and shall be retained by the City as liquidated damages."

t) Refer to Pages 79, 80, 81, 82, 83, 84, 85, and 86, ARTICLE 78. PARTICIPATION BY MINORITY - OWNED AND WOMEN – OWNED BUSINESS ENTERPRISES IN CITY PROCUREMENT;
Delete Article 78, in its entirety, and Substitute the following "ARTICLE 78. (NO TEXT)"

8. Amendments to General Conditions of the Standard Highway Specifications:

a) Refer to Pages 38 and 39, of the Standard Highway Specifications, Article 1.06.46. Project Sign;
Delete the Article 1.06.46, in its entirety;
Substitute the following:

"1.06.46. Project Sign. No project signs will be required on this project."

9. Amendments to the Standard Highway Specifications:

a) Refer to Pages 290 through 292, **SECTION 5.05 – Maintenance**;
Delete Section 5.05, in its entirety, and any references thereto;
Substitute the following:

"SECTION 5.05 – Maintenance"

(A) CONTRACTOR TO KEEP HIMSELF INFORMED OF CONDITIONS

The Contractor must keep himself informed of the condition of the trees which are under maintenance, and will be required to make replacements without notice from the Commissioner. In case of failure or neglect on his part to do so, then the Commissioner shall have the right to purchase such plant material as he shall deem necessary, and to employ such person or persons as he shall deem proper, and to undertake and complete said replacements by contract or otherwise and to charge the expense thereof against the Performance Bond or any sum of money retained by The City, as herein provided, and the excess cost to the Contractor, and the

Contractor shall pay all such expense to which The City may have been put by reason of the neglect of the Contractor to make such replacements as aforesaid.

(B) CONTRACTOR TO MAKE REPAIRS OR REPLACEMENTS

The Contractor shall remove and replace all trees under maintenance which die or, in the opinion of the Engineer, seem unhealthy, stunted or unable to flourish, within the period of maintenance, except as otherwise provided, and replace said trees with new trees of the same size and species as originally planted, except when such death, unhealthiness, stunting or inability to flourish is due to vandalism or damage resulting from causes over which the Contractor has no control, as certified by the Engineer. However, the Engineer may, at his discretion, direct a substitution of species.

(C) PERIOD OF MAINTENANCE

The period of maintenance for each individual tree planted or transplanted shall begin upon planting or transplanting and shall end twenty-four (24) months thereafter. The Contractor shall obtain the said certificate from the Department of Parks and Recreation, in writing, and file such certificate with the Engineer.

(D) MAINTENANCE NOT TO TERMINATE IN WINTER MONTHS

When the termination date of the period of maintenance for planted or transplanted trees shall fall outside the planting periods specified in **Section 4.16**, hereof, the interval between the said termination date and next planting period thereafter, or such part as the Commissioner may determine, shall not be included in the computation of the period of maintenance during which the replacement of defective trees is to be made by the Contractor, and also, in that case, the payment to be made under the provisions of this contract shall not be made until after the date appearing on the Certificate of Acceptance which the Contractor shall obtain from the Department of Parks and Recreation, and file with the Engineer, for trees planted as replacements for defective trees within the said next planting period thereafter, unless otherwise specifically permitted by the Commissioner.

(E) EXPIRATION OF MAINTENANCE

Unless otherwise permitted or directed, defective trees, as determined by the Commissioner, shall be replaced with new trees by the Contractor.

The furnishing and planting of trees as replacements for defective trees shall comply, in all respects, with the contract requirements.

In the event that The City incurs any expense in pursuance of this section of the contract, the certificate of the Commissioner as to the condition of the trees, the nature and extent of the replacements made, and expense incurred for such replacements shall be binding and conclusive on the Contractor.

(F) CONTRACTOR TO NOTIFY COMMISSIONER BEFORE MAKING REPAIRS

The Contractor shall notify the Commissioner, at least two (2) days before making any replacements of the time and place of beginning such work and shall at all times keep the Commissioner or his representatives informed of the proposed prosecution of the work from day to day."

10. The Contractor is hereby notified that this is a City contract funded through apportionment available under Title 23, U.S. Code, as amended, and that the contract will be awarded by the City of New York, subject to the approval of the Commissioner of the New York State Department of Transportation and the Federal Highway Administration. Furthermore, no extensions in time for completion or other changes affecting the contract work can be

granted by the City of New York without concurrence of the State of New York and approval of the Federal Highway Administration.

11. All reference to the delivery of salvageable materials to a designated City-owned yard do not apply to this Contract. All salvageable materials designated by the Engineer shall be stored on site for pick-up by City forces.

12. Wherever references are made within these specifications to "race, creed, color, national origin or sex," they shall be construed to include "sexual orientation and marital status".

REQUIRED CONTRACT PROVISIONS
FEDERAL-AID CONSTRUCTION CONTRACTS

I. General
II. Nondiscrimination
III. Nonsegregated Facilities
IV. Davis-Bacon and Related Act Provisions
V. Contract Work Hours and Safety Standards Act Provisions
VI. Subletting or Assigning the Contract
VII. Safety: Accident Prevention
VIII. False Statements Concerning Highway Projects
IX. Implementation of Clean Air Act and Federal Water Pollution Control Act
X. Compliance with Governmentwide Suspension and Debarment Requirements
XI. Certification Regarding Use of Contract Funds for Lobbying

ATTACHMENTS

A. Employment and Materials Preference for Appalachian Development Highway System or Appalachian Local Access Road Contracts (included in Appalachian contracts only)

I. GENERAL

1. Form FHWA-1273 must be physically incorporated in each construction contract funded under Title 23 (excluding emergency contracts solely intended for debris removal). The contractor (or subcontractor) must insert this form in each subcontract and further require its inclusion in all lower tier subcontracts (excluding purchase orders, rental agreements and other agreements for supplies or services).

The applicable requirements of Form FHWA-1273 are incorporated by reference for work done under any purchase order, rental agreement or agreement for other services. The prime contractor shall be responsible for compliance by any subcontractor, lower-tier subcontractor or service provider.

Form FHWA-1273 must be included in all Federal-aid design-build contracts, in all subcontracts and in lower tier subcontracts (excluding subcontracts for design services, purchase orders, rental agreements and other agreements for supplies or services). The design-builder shall be responsible for compliance by any subcontractor, lower-tier subcontractor or service provider.

Contracting agencies may reference Form FHWA-1273 in bid proposal or request for proposal documents, however, the Form FHWA-1273 must be physically incorporated (not referenced) in all contracts, subcontracts and lower-tier subcontracts (excluding purchase orders, rental agreements and other agreements for supplies or services related to a construction contract).

2. Subject to the applicability criteria noted in the following sections, these contract provisions shall apply to all work performed on the contract by the contractor's own organization and with the assistance of workers under the contractor's immediate superintendence and to all work performed on the contract by piecework, station work, or by subcontract.

3. A breach of any of the stipulations contained in these Required Contract Provisions may be sufficient grounds for withholding of progress payments, withholding of final payment, termination of the contract, suspension / debarment or any other action determined to be appropriate by the contracting agency and FHWA.

4. Selection of Labor: During the performance of this contract, the contractor shall not use convict labor for any purpose within the limits of a construction project on a Federal-aid highway unless it is labor performed by convicts who are on parole, supervised release, or probation. The term Federal-aid highway does not include roadways functionally classified as local roads or rural minor collectors.

II. NONDISCRIMINATION

The provisions of this section related to 23 CFR Part 230 are applicable to all Federal-aid construction contracts and to all related construction subcontracts of $10,000 or more. The provisions of 23 CFR Part 230 are not applicable to material supply, engineering, or architectural service contracts.

In addition, the contractor and all subcontractors must comply with the following policies: Executive Order 11246, 41 CFR 60, 29 CFR 1625-1627, Title 23 USC Section 140, the Rehabilitation Act of 1973, as amended (29 USC 794), Title VI of the Civil Rights Act of 1964, as amended, and related regulations including 49 CFR Parts 21, 26 and 27; and 23 CFR Parts 200, 230, and 633.

The contractor and all subcontractors must comply with: the requirements of the Equal Opportunity Clause in 41 CFR 60-1.4(b) and, for all construction contracts exceeding $10,000, the Standard Federal Equal Employment Opportunity Construction Contract Specifications in 41 CFR 60-4.3.

Note: The U.S. Department of Labor has exclusive authority to determine compliance with Executive Order 11246 and the policies of the Secretary of Labor including 41 CFR 60, and 29 CFR 1625-1627. The contracting agency and the FHWA have the authority and the responsibility to ensure compliance with Title 23 USC Section 140, the Rehabilitation Act of 1973, as amended (29 USC 794), and Title VI of the Civil Rights Act of 1964, as amended, and related regulations including 49 CFR Parts 21, 26 and 27; and 23 CFR Parts 200, 230, and 633.

The following provision is adopted from 23 CFR 230, Appendix A, with appropriate revisions to conform to the U.S. Department of Labor (US DOL) and FHWA requirements.

1. Equal Employment Opportunity: Equal employment opportunity (EEO) requirements not to discriminate and to take affirmative action to assure equal opportunity as set forth under laws, executive orders, rules, regulations (28 CFR 35, 29 CFR 1630, 29 CFR 1625-1627, 41 CFR 60 and 49 CFR 27) and orders of the Secretary of Labor as modified by the provisions prescribed herein, and imposed pursuant to 23 U.S.C. 140 shall constitute the EEO and specific affirmative action standards for the contractor's project activities under

this contract. The provisions of the Americans with Disabilities Act of 1990 (42 U.S.C. 12101 et seq.) set forth under 28 CFR 35 and 29 CFR 1630 are incorporated by reference in this contract. In the execution of this contract, the contractor agrees to comply with the following minimum specific requirement activities of EEO:

a. The contractor will work with the contracting agency and the Federal Government to ensure that it has made every good faith effort to provide equal opportunity with respect to all of its terms and conditions of employment and in their review of activities under the contract.

b. The contractor will accept as its operating policy the following statement:

"It is the policy of this Company to assure that applicants are employed, and that employees are treated during employment, without regard to their race, religion, sex, color, national origin, age or disability. Such action shall include: employment, upgrading, demotion, or transfer; recruitment or recruitment advertising; layoff or termination; rates of pay or other forms of compensation; and selection for training, including apprenticeship, pre-apprenticeship, and/or on-the-job training."

2. EEO Officer: The contractor will designate and make known to the contracting officers an EEO Officer who will have the responsibility for and must be capable of effectively administering and promoting an active EEO program and who must be assigned adequate authority and responsibility to do so.

3. Dissemination of Policy: All members of the contractor's staff who are authorized to hire, supervise, promote, and discharge employees, or who recommend such action, or who are substantially involved in such action, will be made fully cognizant of, and will implement, the contractor's EEO policy and contractual responsibilities to provide EEO in each grade and classification of employment. To ensure that the above agreement will be met, the following actions will be taken as a minimum:

a. Periodic meetings of supervisory and personnel office employees will be conducted before the start of work and then not less often than once every six months, at which time the contractor's EEO policy and its implementation will be reviewed and explained. The meetings will be conducted by the EEO Officer.

b. All new supervisory or personnel office employees will be given a thorough indoctrination by the EEO Officer, covering all major aspects of the contractor's EEO obligations within thirty days following their reporting for duty with the contractor.

c. All personnel who are engaged in direct recruitment for the project will be instructed by the EEO Officer in the contractor's procedures for locating and hiring minorities and women.

d. Notices and posters setting forth the contractor's EEO policy will be placed in areas readily accessible to employees, applicants for employment and potential employees.

e. The contractor's EEO policy and the procedures to implement such policy will be brought to the attention of employees by means of meetings, employee handbooks, or other appropriate means.

4. Recruitment: When advertising for employees, the contractor will include in all advertisements for employees the notation: "An Equal Opportunity Employer." All such advertisements will be placed in publications having a large circulation among minorities and women in the area from which the project work force would normally be derived.

a. The contractor will, unless precluded by a valid bargaining agreement, conduct systematic and direct recruitment through public and private employee referral sources likely to yield qualified minorities and women. To meet this requirement, the contractor will identify sources of potential minority group employees, and establish with such identified sources procedures whereby minority and women applicants may be referred to the contractor for employment consideration.

b. In the event the contractor has a valid bargaining agreement providing for exclusive hiring hall referrals, the contractor is expected to observe the provisions of that agreement to the extent that the system meets the contractor's compliance with EEO contract provisions. Where implementation of such an agreement has the effect of discriminating against minorities or women, or obligates the contractor to do the same, such implementation violates Federal nondiscrimination provisions.

c. The contractor will encourage its present employees to refer minorities and women as applicants for employment. Information and procedures with regard to referring such applicants will be discussed with employees.

5. Personnel Actions: Wages, working conditions, and employee benefits shall be established and administered, and personnel actions of every type, including hiring, upgrading, promotion, transfer, demotion, layoff, and termination, shall be taken without regard to race, color, religion, sex, national origin, age or disability. The following procedures shall be followed:

a. The contractor will conduct periodic inspections of project sites to insure that working conditions and employee facilities do not indicate discriminatory treatment of project site personnel.

b. The contractor will periodically evaluate the spread of wages paid within each classification to determine any evidence of discriminatory wage practices.

c. The contractor will periodically review selected personnel actions in depth to determine whether there is evidence of discrimination. Where evidence is found, the contractor will promptly take corrective action. If the review indicates that the discrimination may extend beyond the actions reviewed, such corrective action shall include all affected persons.

d. The contractor will promptly investigate all complaints of alleged discrimination made to the contractor in connection with its obligations under this contract, will attempt to resolve such complaints, and will take appropriate corrective action within a reasonable time. If the investigation indicates that the discrimination may affect persons other than the complainant, such corrective action shall include such other persons. Upon completion of each investigation, the contractor will inform every complainant of all of their avenues of appeal.

6. Training and Promotion:

a. The contractor will assist in locating, qualifying, and increasing the skills of minorities and women who are

applicants for employment or current employees. Such efforts should be aimed at developing full journey level status employees in the type of trade or job classification involved.

b. Consistent with the contractor's work force requirements and as permissible under Federal and State regulations, the contractor shall make full use of training programs, i.e., apprenticeship, and on-the-job training programs for the geographical area of contract performance. In the event a special provision for training is provided under this contract, this subparagraph will be superseded as indicated in the special provision. The contracting agency may reserve training positions for persons who receive welfare assistance in accordance with 23 U.S.C. 140(a).

c. The contractor will advise employees and applicants for employment of available training programs and entrance requirements for each.

d. The contractor will periodically review the training and promotion potential of employees who are minorities and women and will encourage eligible employees to apply for such training and promotion.

7. Unions: If the contractor relies in whole or in part upon unions as a source of employees, the contractor will use good faith efforts to obtain the cooperation of such unions to increase opportunities for minorities and women. Actions by the contractor, either directly or through a contractor's association acting as agent, will include the procedures set forth below:

a. The contractor will use good faith efforts to develop, in cooperation with the unions, joint training programs aimed toward qualifying more minorities and women for membership in the unions and increasing the skills of minorities and women so that they may qualify for higher paying employment.

b. The contractor will use good faith efforts to incorporate an EEO clause into each union agreement to the end that such union will be contractually bound to refer applicants without regard to their race, color, religion, sex, national origin, age or disability.

c. The contractor is to obtain information as to the referral practices and policies of the labor union except that to the extent such information is within the exclusive possession of the labor union and such labor union refuses to furnish such information to the contractor, the contractor shall so certify to the contracting agency and shall set forth what efforts have been made to obtain such information.

d. In the event the union is unable to provide the contractor with a reasonable flow of referrals within the time limit set forth in the collective bargaining agreement, the contractor will, through independent recruitment efforts, fill the employment vacancies without regard to race, color, religion, sex, national origin, age or disability; making full efforts to obtain qualified and/or qualifiable minorities and women. The failure of a union to provide sufficient referrals (even though it is obligated to provide exclusive referrals under the terms of a collective bargaining agreement) does not relieve the contractor from the requirements of this paragraph. In the event the union referral practice prevents the contractor from meeting the obligations pursuant to Executive Order 11246, as amended, and these special provisions, such contractor shall immediately notify the contracting agency.

8. Reasonable Accommodation for Applicants / Employees with Disabilities: The contractor must be familiar with the requirements for and comply with the Americans with Disabilities Act and all rules and regulations established there under. Employers must provide reasonable accommodation in all employment activities unless to do so would cause an undue hardship.

9. Selection of Subcontractors, Procurement of Materials and Leasing of Equipment: The contractor shall not discriminate on the grounds of race, color, religion, sex, national origin, age or disability in the selection and retention of subcontractors, including procurement of materials and leases of equipment. The contractor shall take all necessary and reasonable steps to ensure nondiscrimination in the administration of this contract.

a. The contractor shall notify all potential subcontractors and suppliers and lessors of their EEO obligations under this contract.

b. The contractor will use good faith efforts to ensure subcontractor compliance with their EEO obligations.

10. Assurance Required by 49 CFR 26.13(b):

a. The requirements of 49 CFR Part 26 and the State DOT's U.S. DOT-approved DBE program are incorporated by reference.

b. The contractor or subcontractor shall not discriminate on the basis of race, color, national origin, or sex in the performance of this contract. The contractor shall carry out applicable requirements of 49 CFR Part 26 in the award and administration of DOT-assisted contracts. Failure by the contractor to carry out these requirements is a material breach of this contract, which may result in the termination of this contract or such other remedy as the contracting agency deems appropriate.

11. Records and Reports: The contractor shall keep such records as necessary to document compliance with the EEO requirements. Such records shall be retained for a period of three years following the date of the final payment to the contractor for all contract work and shall be available at reasonable times and places for inspection by authorized representatives of the contracting agency and the FHWA.

a. The records kept by the contractor shall document the following:

(1) The number and work hours of minority and non-minority group members and women employed in each work classification on the project;

(2) The progress and efforts being made in cooperation with unions, when applicable, to increase employment opportunities for minorities and women; and

(3) The progress and efforts being made in locating, hiring, training, qualifying, and upgrading minorities and women;

b. The contractors and subcontractors will submit an annual report to the contracting agency each July for the duration of the project, indicating the number of minority, women, and non-minority group employees currently engaged in each work classification required by the contract work. This information is to be reported on Form FHWA-1391. The staffing data should represent the project work force on board in all or any part of the last payroll period preceding the end of July. If on-the-job training is being required by special provision, the contractor

will be required to collect and report training data. The employment data should reflect the work force on board during all or any part of the last payroll period preceding the end of July.

III. NONSEGREGATED FACILITIES

This provision is applicable to all Federal-aid construction contracts and to all related construction subcontracts of $10,000 or more.

The contractor must ensure that facilities provided for employees are provided in such a manner that segregation on the basis of race, color, religion, sex, or national origin cannot result. The contractor may neither require such segregated use by written or oral policies nor tolerate such use by employee custom. The contractor's obligation extends further to ensure that its employees are not assigned to perform their services at any location, under the contractor's control, where the facilities are segregated. The term "facilities" includes waiting rooms, work areas, restaurants and other eating areas, time clocks, restrooms, washrooms, locker rooms, and other storage or dressing areas, parking lots, drinking fountains, recreation or entertainment areas, transportation, and housing provided for employees. The contractor shall provide separate or single-user restrooms and necessary dressing or sleeping areas to assure privacy between sexes.

IV. DAVIS-BACON AND RELATED ACT PROVISIONS

This section is applicable to all Federal-aid construction projects exceeding $2,000 and to all related subcontracts and lower-tier subcontracts (regardless of subcontract size). The requirements apply to all projects located within the right-of-way of a roadway that is functionally classified as Federal-aid highway. This excludes roadways functionally classified as local roads or rural minor collectors, which are exempt. Contracting agencies may elect to apply these requirements to other projects.

The following provisions are from the U.S. Department of Labor regulations in 29 CFR 5.5 "Contract provisions and related matters" with minor revisions to conform to the FHWA-1273 format and FHWA program requirements.

1. Minimum wages

a. All laborers and mechanics employed or working upon the site of the work, will be paid unconditionally and not less often than once a week, and without subsequent deduction or rebate on any account (except such payroll deductions as are permitted by regulations issued by the Secretary of Labor under the Copeland Act (29 CFR part 3)), the full amount of wages and bona fide fringe benefits (or cash equivalents thereof) due at time of payment computed at rates not less than those contained in the wage determination of the Secretary of Labor which is attached hereto and made a part hereof, regardless of any contractual relationship which may be alleged to exist between the contractor and such laborers and mechanics.

Contributions made or costs reasonably anticipated for bona fide fringe benefits under section 1(b)(2) of the Davis-Bacon Act on behalf of laborers or mechanics are considered wages paid to such laborers or mechanics, subject to the provisions of paragraph 1.d. of this section; also, regular contributions made or costs incurred for more than a weekly period (but not less often than quarterly) under plans, funds, or programs which cover the particular weekly period, are deemed to be constructively made or incurred during such weekly period. Such laborers and mechanics shall be paid the appropriate wage rate and fringe benefits on the wage determination for the classification of work actually performed, without regard to skill, except as provided in 29 CFR 5.5(a)(4). Laborers or mechanics performing work in more than one classification may be compensated at the rate specified for each classification for the time actually worked therein: Provided, That the employer's payroll records accurately set forth the time spent in each classification in which work is performed. The wage determination (including any additional classification and wage rates conformed under paragraph 1.b. of this section) and the Davis-Bacon poster (WH–1321) shall be posted at all times by the contractor and its subcontractors at the site of the work in a prominent and accessible place where it can be easily seen by the workers.

b.(1) The contracting officer shall require that any class of laborers or mechanics, including helpers, which is not listed in the wage determination and which is to be employed under the contract shall be classified in conformance with the wage determination. The contracting officer shall approve an additional classification and wage rate and fringe benefits therefore only when the following criteria have been met:

(i) The work to be performed by the classification requested is not performed by a classification in the wage determination; and

(ii) The classification is utilized in the area by the construction industry; and

(iii) The proposed wage rate, including any bona fide fringe benefits, bears a reasonable relationship to the wage rates contained in the wage determination.

(2) If the contractor and the laborers and mechanics to be employed in the classification (if known), or their representatives, and the contracting officer agree on the classification and wage rate (including the amount designated for fringe benefits where appropriate), a report of the action taken shall be sent by the contracting officer to the Administrator of the Wage and Hour Division, Employment Standards Administration, U.S. Department of Labor, Washington, DC 20210. The Administrator, or an authorized representative, will approve, modify, or disapprove every additional classification action within 30 days of receipt and so advise the contracting officer or will notify the contracting officer within the 30-day period that additional time is necessary.

(3) In the event the contractor, the laborers or mechanics to be employed in the classification or their representatives, and the contracting officer do not agree on the proposed classification and wage rate (including the amount designated for fringe benefits, where appropriate), the contracting officer shall refer the questions, including the views of all interested parties and the recommendation of the contracting officer, to the Wage and Hour Administrator for determination. The Wage and Hour Administrator, or an authorized representative, will issue a determination within 30 days of receipt and so advise the contracting officer or

will notify the contracting officer within the 30-day period that additional time is necessary.

(4) The wage rate (including fringe benefits where appropriate) determined pursuant to paragraphs 1.b.(2) or 1.b.(3) of this section, shall be paid to all workers performing work in the classification under this contract from the first day on which work is performed in the classification.

c. Whenever the minimum wage rate prescribed in the contract for a class of laborers or mechanics includes a fringe benefit which is not expressed as an hourly rate, the contractor shall either pay the benefit as stated in the wage determination or shall pay another bona fide fringe benefit or an hourly cash equivalent thereof.

d. If the contractor does not make payments to a trustee or other third person, the contractor may consider as part of the wages of any laborer or mechanic the amount of any costs reasonably anticipated in providing bona fide fringe benefits under a plan or program, Provided, That the Secretary of Labor has found, upon the written request of the contractor, that the applicable standards of the Davis-Bacon Act have been met. The Secretary of Labor may require the contractor to set aside in a separate account assets for the meeting of obligations under the plan or program.

2. Withholding

The contracting agency shall upon its own action or upon written request of an authorized representative of the Department of Labor, withhold or cause to be withheld from the contractor under this contract, or any other Federal contract with the same prime contractor, or any other federally-assisted contract subject to Davis-Bacon prevailing wage requirements, which is held by the same prime contractor, so much of the accrued payments or advances as may be considered necessary to pay laborers and mechanics, including apprentices, trainees, and helpers, employed by the contractor or any subcontractor the full amount of wages required by the contract. In the event of failure to pay any laborer or mechanic, including any apprentice, trainee, or helper, employed or working on the site of the work, all or part of the wages required by the contract, the contracting agency may, after written notice to the contractor, take such action as may be necessary to cause the suspension of any further payment, advance, or guarantee of funds until such violations have ceased.

3. Payrolls and basic records

a. Payrolls and basic records relating thereto shall be maintained by the contractor during the course of the work and preserved for a period of three years thereafter for all laborers and mechanics working at the site of the work. Such records shall contain the name, address, and social security number of each such worker, his or her correct classification, hourly rates of wages paid (including rates of contributions or costs anticipated for bona fide fringe benefits or cash equivalents thereof of the types described in section 1(b)(2)(B) of the Davis-Bacon Act), daily and weekly number of hours worked, deductions made and actual wages paid. Whenever the Secretary of Labor has found under 29 CFR 5.5(a)(1)(iv) that the wages of any laborer or mechanic include the amount of any costs reasonably anticipated in providing benefits under a plan or program described in section 1(b)(2)(B) of the Davis-Bacon Act, the contractor shall maintain records which show that the commitment to provide such benefits is enforceable, that the plan or program is financially responsible, and that the plan or program has been communicated in writing to the laborers or mechanics affected, and records which show the costs anticipated or the actual cost incurred in providing such benefits. Contractors employing apprentices or trainees under approved programs shall maintain written evidence of the registration of apprenticeship programs and certification of trainee programs, the registration of the apprentices and trainees, and the ratios and wage rates prescribed in the applicable programs.

b.(1) The contractor shall submit weekly for each week in which any contract work is performed a copy of all payrolls to the contracting agency. The payrolls submitted shall set out accurately and completely all of the information required to be maintained under 29 CFR 5.5(a)(3)(i), except that full social security numbers and home addresses shall not be included on weekly transmittals. Instead the payrolls shall only need to include an individually identifying number for each employee (e.g. , the last four digits of the employee's social security number). The required weekly payroll information may be submitted in any form desired. Optional Form WH–347 is available for this purpose from the Wage and Hour Division Web site at http://www.dol.gov/esa/whd/forms/wh347instr.htm or its successor site. The prime contractor is responsible for the submission of copies of payrolls by all subcontractors. Contractors and subcontractors shall maintain the full social security number and current address of each covered worker, and shall provide them upon request to the contracting agency for transmission to the State DOT, the FHWA or the Wage and Hour Division of the Department of Labor for purposes of an investigation or audit of compliance with prevailing wage requirements. It is not a violation of this section for a prime contractor to require a subcontractor to provide addresses and social security numbers to the prime contractor for its own records, without weekly submission to the contracting agency..

(2) Each payroll submitted shall be accompanied by a "Statement of Compliance," signed by the contractor or subcontractor or his or her agent who pays or supervises the payment of the persons employed under the contract and shall certify the following:

(i) That the payroll for the payroll period contains the information required to be provided under §5.5 (a)(3)(ii) of Regulations, 29 CFR part 5, the appropriate information is being maintained under §5.5 (a)(3)(i) of Regulations, 29 CFR part 5, and that such information is correct and complete;

(ii) That each laborer or mechanic (including each helper, apprentice, and trainee) employed on the contract during the payroll period has been paid the full weekly wages earned, without rebate, either directly or indirectly, and that no deductions have been made either directly or indirectly from the full wages earned, other than permissible deductions as set forth in Regulations, 29 CFR part 3;

(iii) That each laborer or mechanic has been paid not less than the applicable wage rates and fringe benefits or cash equivalents for the classification of work performed, as specified in the applicable wage determination incorporated into the contract.

(3) The weekly submission of a properly executed certification set forth on the reverse side of Optional Form WH–347 shall satisfy the requirement for submission of the "Statement of Compliance" required by paragraph 3.b.(2) of this section.

(4) The falsification of any of the above certifications may subject the contractor or subcontractor to civil or criminal prosecution under section 1001 of title 18 and section 231 of title 31 of the United States Code.

c. The contractor or subcontractor shall make the records required under paragraph 3.a. of this section available for inspection, copying, or transcription by authorized representatives of the contracting agency, the State DOT, the FHWA, or the Department of Labor, and shall permit such representatives to interview employees during working hours on the job. If the contractor or subcontractor fails to submit the required records or to make them available, the FHWA may, after written notice to the contractor, the contracting agency or the State DOT, take such action as may be necessary to cause the suspension of any further payment, advance, or guarantee of funds. Furthermore, failure to submit the required records upon request or to make such records available may be grounds for debarment action pursuant to 29 CFR 5.12.

4. Apprentices and trainees

a. Apprentices (programs of the USDOL).

Apprentices will be permitted to work at less than the predetermined rate for the work they performed when they are employed pursuant to and individually registered in a bona fide apprenticeship program registered with the U.S. Department of Labor, Employment and Training Administration, Office of Apprenticeship Training, Employer and Labor Services, or with a State Apprenticeship Agency recognized by the Office, or if a person is employed in his or her first 90 days of probationary employment as an apprentice in such an apprenticeship program, who is not individually registered in the program, but who has been certified by the Office of Apprenticeship Training, Employer and Labor Services or a State Apprenticeship Agency (where appropriate) to be eligible for probationary employment as an apprentice.

The allowable ratio of apprentices to journeymen on the job site in any craft classification shall not be greater than the ratio permitted to the contractor as to the entire work force under the registered program. Any worker listed on a payroll at an apprentice wage rate, who is not registered or otherwise employed as stated above, shall be paid not less than the applicable wage rate on the wage determination for the classification of work actually performed. In addition, any apprentice performing work on the job site in excess of the ratio permitted under the registered program shall be paid not less than the applicable wage rate on the wage determination for the work actually performed. Where a contractor is performing construction on a project in a locality other than that in which its program is registered, the ratios and wage rates (expressed in percentages of the journeyman's hourly rate) specified in the contractor's or subcontractor's registered program shall be observed.

Every apprentice must be paid at not less than the rate specified in the registered program for the apprentice's level of progress, expressed as a percentage of the journeymen hourly rate specified in the applicable wage determination. Apprentices shall be paid fringe benefits in accordance with the provisions of the apprenticeship program. If the apprenticeship program does not specify fringe benefits, apprentices must be paid the full amount of fringe benefits listed on the wage determination for the applicable classification. If the Administrator determines that a different practice prevails for the applicable apprentice classification, fringes shall be paid in accordance with that determination.

In the event the Office of Apprenticeship Training, Employer and Labor Services, or a State Apprenticeship Agency recognized by the Office, withdraws approval of an apprenticeship program, the contractor will no longer be permitted to utilize apprentices at less than the applicable predetermined rate for the work performed until an acceptable program is approved.

b. Trainees (programs of the USDOL).

Except as provided in 29 CFR 5.16, trainees will not be permitted to work at less than the predetermined rate for the work performed unless they are employed pursuant to and individually registered in a program which has received prior approval, evidenced by formal certification by the U.S. Department of Labor, Employment and Training Administration.

The ratio of trainees to journeymen on the job site shall not be greater than permitted under the plan approved by the Employment and Training Administration.

Every trainee must be paid at not less than the rate specified in the approved program for the trainee's level of progress, expressed as a percentage of the journeyman hourly rate specified in the applicable wage determination. Trainees shall be paid fringe benefits in accordance with the provisions of the trainee program. If the trainee program does not mention fringe benefits, trainees shall be paid the full amount of fringe benefits listed on the wage determination unless the Administrator of the Wage and Hour Division determines that there is an apprenticeship program associated with the corresponding journeyman wage rate on the wage determination which provides for less than full fringe benefits for apprentices. Any employee listed on the payroll at a trainee rate who is not registered and participating in a training plan approved by the Employment and Training Administration shall be paid not less than the applicable wage rate on the wage determination for the classification of work actually performed. In addition, any trainee performing work on the job site in excess of the ratio permitted under the registered program shall be paid not less than the applicable wage rate on the wage determination for the work actually performed.

In the event the Employment and Training Administration withdraws approval of a training program, the contractor will no longer be permitted to utilize trainees at less than the applicable predetermined rate for the work performed until an acceptable program is approved.

c. Equal employment opportunity. The utilization of apprentices, trainees and journeymen under this part shall be in conformity with the equal employment opportunity requirements of Executive Order 11246, as amended, and 29 CFR part 30.

d. Apprentices and Trainees (programs of the U.S. DOT).

Apprentices and trainees working under apprenticeship and skill training programs which have been certified by the Secretary of Transportation as promoting EEO in connection with Federal-aid highway construction programs are not subject to the requirements of paragraph 4 of this Section IV. The straight time hourly wage rates for apprentices and trainees under such programs will be established by the particular programs. The ratio of apprentices and trainees to journeymen shall not be greater than permitted by the terms of the particular program.

5. Compliance with Copeland Act requirements. The contractor shall comply with the requirements of 29 CFR part 3, which are incorporated by reference in this contract.

6. Subcontracts. The contractor or subcontractor shall insert Form FHWA-1273 in any subcontracts and also require the subcontractors to include Form FHWA-1273 in any lower tier subcontracts. The prime contractor shall be responsible for the compliance by any subcontractor or lower tier subcontractor with all the contract clauses in 29 CFR 5.5.

7. Contract termination: debarment. A breach of the contract clauses in 29 CFR 5.5 may be grounds for termination of the contract, and for debarment as a contractor and a subcontractor as provided in 29 CFR 5.12.

8. Compliance with Davis-Bacon and Related Act requirements. All rulings and interpretations of the Davis-Bacon and Related Acts contained in 29 CFR parts 1, 3, and 5 are herein incorporated by reference in this contract.

9. Disputes concerning labor standards. Disputes arising out of the labor standards provisions of this contract shall not be subject to the general disputes clause of this contract. Such disputes shall be resolved in accordance with the procedures of the Department of Labor set forth in 29 CFR parts 5, 6, and 7. Disputes within the meaning of this clause include disputes between the contractor (or any of its subcontractors) and the contracting agency, the U.S. Department of Labor, or the employees or their representatives.

10. Certification of eligibility.

a. By entering into this contract, the contractor certifies that neither it (nor he or she) nor any person or firm who has an interest in the contractor's firm is a person or firm ineligible to be awarded Government contracts by virtue of section 3(a) of the Davis-Bacon Act or 29 CFR 5.12(a)(1).

b. No part of this contract shall be subcontracted to any person or firm ineligible for award of a Government contract by virtue of section 3(a) of the Davis-Bacon Act or 29 CFR 5.12(a)(1).

c. The penalty for making false statements is prescribed in the U.S. Criminal Code, 18 U.S.C. 1001.

V. CONTRACT WORK HOURS AND SAFETY STANDARDS ACT

The following clauses apply to any Federal-aid construction contract in an amount in excess of $100,000 and subject to the overtime provisions of the Contract Work Hours and Safety Standards Act. These clauses shall be inserted in addition to the clauses required by 29 CFR 5.5(a) or 29 CFR 4.6. As used in this paragraph, the terms laborers and mechanics include watchmen and guards.

1. Overtime requirements. No contractor or subcontractor contracting for any part of the contract work which may require or involve the employment of laborers or mechanics shall require or permit any such laborer or mechanic in any workweek in which he or she is employed on such work to work in excess of forty hours in such workweek unless such laborer or mechanic receives compensation at a rate not less than one and one-half times the basic rate of pay for all hours worked in excess of forty hours in such workweek.

2. Violation; liability for unpaid wages; liquidated damages. In the event of any violation of the clause set forth in paragraph (1.) of this section, the contractor and any subcontractor responsible therefor shall be liable for the unpaid wages. In addition, such contractor and subcontractor shall be liable to the United States (in the case of work done under contract for the District of Columbia or a territory, to such District or to such territory), for liquidated damages. Such liquidated damages shall be computed with respect to each individual laborer or mechanic, including watchmen and guards, employed in violation of the clause set forth in paragraph (1.) of this section, in the sum of $10 for each calendar day on which such individual was required or permitted to work in excess of the standard workweek of forty hours without payment of the overtime wages required by the clause set forth in paragraph (1.) of this section.

3. Withholding for unpaid wages and liquidated damages. The FHWA or the contacting agency shall upon its own action or upon written request of an authorized representative of the Department of Labor withhold or cause to be withheld, from any moneys payable on account of work performed by the contractor or subcontractor under any such contract or any other Federal contract with the same prime contractor, or any other federally-assisted contract subject to the Contract Work Hours and Safety Standards Act, which is held by the same prime contractor, such sums as may be determined to be necessary to satisfy any liabilities of such contractor or subcontractor for unpaid wages and liquidated damages as provided in the clause set forth in paragraph (2.) of this section.

4. Subcontracts. The contractor or subcontractor shall insert in any subcontracts the clauses set forth in paragraph (1.) through (4.) of this section and also a clause requiring the subcontractors to include these clauses in any lower tier subcontracts. The prime contractor shall be responsible for compliance by any subcontractor or lower tier subcontractor with the clauses set forth in paragraphs (1.) through (4.) of this section.

VI. SUBLETTING OR ASSIGNING THE CONTRACT

This provision is applicable to all Federal-aid construction contracts on the National Highway System.

1. The contractor shall perform with its own organization contract work amounting to not less than 30 percent (or a greater percentage if specified elsewhere in the contract) of the total original contract price, excluding any specialty items designated by the contracting agency. Specialty items may be performed by subcontract and the amount of any such specialty items performed may be deducted from the total original contract price before computing the amount of work required to be performed by the contractor's own organization (23 CFR 635.116).

a. The term "perform work with its own organization" refers to workers employed or leased by the prime contractor, and equipment owned or rented by the prime contractor, with or without operators. Such term does not include employees or equipment of a subcontractor or lower tier subcontractor, agents of the prime contractor, or any other assignees. The term may include payments for the costs of hiring leased employees from an employee leasing firm meeting all relevant Federal and State regulatory requirements. Leased employees may only be included in this term if the prime contractor meets all of the following conditions:

(1) the prime contractor maintains control over the supervision of the day-to-day activities of the leased employees;
(2) the prime contractor remains responsible for the quality of the work of the leased employees;
(3) the prime contractor retains all power to accept or exclude individual employees from work on the project; and
(4) the prime contractor remains ultimately responsible for the payment of predetermined minimum wages, the submission of payrolls, statements of compliance and all other Federal regulatory requirements.

b. "Specialty Items" shall be construed to be limited to work that requires highly specialized knowledge, abilities, or equipment not ordinarily available in the type of contracting organizations qualified and expected to bid or propose on the contract as a whole and in general are to be limited to minor components of the overall contract.

2. The contract amount upon which the requirements set forth in paragraph (1) of Section VI is computed includes the cost of material and manufactured products which are to be purchased or produced by the contractor under the contract provisions.

3. The contractor shall furnish (a) a competent superintendent or supervisor who is employed by the firm, has full authority to direct performance of the work in accordance with the contract requirements, and is in charge of all construction operations (regardless of who performs the work) and (b) such other of its own organizational resources (supervision, management, and engineering services) as the contracting officer determines is necessary to assure the performance of the contract.

4. No portion of the contract shall be sublet, assigned or otherwise disposed of except with the written consent of the contracting officer, or authorized representative, and such consent when given shall not be construed to relieve the contractor of any responsibility for the fulfillment of the contract. Written consent will be given only after the contracting agency has assured that each subcontract is evidenced in writing and that it contains all pertinent provisions and requirements of the prime contract.

5. The 30% self-performance requirement of paragraph (1) is not applicable to design-build contracts; however, contracting agencies may establish their own self-performance requirements.

VII. SAFETY: ACCIDENT PREVENTION

This provision is applicable to all Federal-aid construction contracts and to all related subcontracts.

1. In the performance of this contract the contractor shall comply with all applicable Federal, State, and local laws governing safety, health, and sanitation (23 CFR 635). The contractor shall provide all safeguards, safety devices and protective equipment and take any other needed actions as it determines, or as the contracting officer may determine, to be reasonably necessary to protect the life and health of employees on the job and the safety of the public and to protect property in connection with the performance of the work covered by the contract.

2. It is a condition of this contract, and shall be made a condition of each subcontract, which the contractor enters into pursuant to this contract, that the contractor and any subcontractor shall not permit any employee, in performance of the contract, to work in surroundings or under conditions which are unsanitary, hazardous or dangerous to his/her health or safety, as determined under construction safety and health standards (29 CFR 1926) promulgated by the Secretary of Labor, in accordance with Section 107 of the Contract Work Hours and Safety Standards Act (40 U.S.C. 3704).

3. Pursuant to 29 CFR 1926.3, it is a condition of this contract that the Secretary of Labor or authorized representative thereof, shall have right of entry to any site of contract performance to inspect or investigate the matter of compliance with the construction safety and health standards and to carry out the duties of the Secretary under Section 107 of the Contract Work Hours and Safety Standards Act (40 U.S.C.3704).

VIII. FALSE STATEMENTS CONCERNING HIGHWAY PROJECTS

This provision is applicable to all Federal-aid construction contracts and to all related subcontracts.

In order to assure high quality and durable construction in conformity with approved plans and specifications and a high degree of reliability on statements and representations made by engineers, contractors, suppliers, and workers on Federal-aid highway projects, it is essential that all persons concerned with the project perform their functions as carefully, thoroughly, and honestly as possible. Willful falsification, distortion, or misrepresentation with respect to any facts related to the project is a violation of Federal law. To prevent any misunderstanding regarding the seriousness of these and similar acts, Form FHWA-1022 shall be posted on each Federal-aid highway project (23 CFR 635) in one or more places where it is readily available to all persons concerned with the project:

18 U.S.C. 1020 reads as follows:

"Whoever, being an officer, agent, or employee of the United States, or of any State or Territory, or whoever, whether a person, association, firm, or corporation, knowingly makes any false statement, false representation, or false report as to the character, quality, quantity, or cost of the material used or to be used, or the quantity or quality of the work performed or to be performed, or the cost thereof in connection with the submission of plans, maps, specifications, contracts, or costs of construction on any highway or related project submitted for approval to the Secretary of Transportation; or

Whoever knowingly makes any false statement, false representation, false report or false claim with respect to the character, quality, quantity, or cost of any work performed or to be performed, or materials furnished or to be furnished, in connection with the construction of any highway or related project approved by the Secretary of Transportation; or

Whoever knowingly makes any false statement or false representation as to material fact in any statement, certificate, or report submitted pursuant to provisions of the Federal-aid Roads Act approved July 1, 1916, (39 Stat. 355), as amended and supplemented;

Shall be fined under this title or imprisoned not more than 5 years or both."

IX. IMPLEMENTATION OF CLEAN AIR ACT AND FEDERAL WATER POLLUTION CONTROL ACT

This provision is applicable to all Federal-aid construction contracts and to all related subcontracts.

By submission of this bid/proposal or the execution of this contract, or subcontract, as appropriate, the bidder, proposer, Federal-aid construction contractor, or subcontractor, as appropriate, will be deemed to have stipulated as follows:

1. That any person who is or will be utilized in the performance of this contract is not prohibited from receiving an award due to a violation of Section 508 of the Clean Water Act or Section 306 of the Clean Air Act.
2. That the contractor agrees to include or cause to be included the requirements of paragraph (1) of this Section X in every subcontract, and further agrees to take such action as the contracting agency may direct as a means of enforcing such requirements.

X. CERTIFICATION REGARDING DEBARMENT, SUSPENSION, INELIGIBILITY AND VOLUNTARY EXCLUSION

This provision is applicable to all Federal-aid construction contracts, design-build contracts, subcontracts, lower-tier subcontracts, purchase orders, lease agreements, consultant contracts or any other covered transaction requiring FHWA approval or that is estimated to cost $25,000 or more – as defined in 2 CFR Parts 180 and 1200.

1. **Instructions for Certification – First Tier Participants:**

a. By signing and submitting this proposal, the prospective first tier participant is providing the certification set out below.

b. The inability of a person to provide the certification set out below will not necessarily result in denial of participation in this covered transaction. The prospective first tier participant shall submit an explanation of why it cannot provide the certification set out below. The certification or explanation will be considered in connection with the department or agency's determination whether to enter into this transaction. However, failure of the prospective first tier participant to furnish a certification or an explanation shall disqualify such a person from participation in this transaction.

c. The certification in this clause is a material representation of fact upon which reliance was placed when the contracting agency determined to enter into this transaction. If it is later determined that the prospective participant knowingly rendered an erroneous certification, in addition to other remedies available to the Federal Government, the contracting agency may terminate this transaction for cause of default.

d. The prospective first tier participant shall provide immediate written notice to the contracting agency to whom this proposal is submitted if any time the prospective first tier participant learns that its certification was erroneous when submitted or has become erroneous by reason of changed circumstances.

e. The terms "covered transaction," "debarred," "suspended," "ineligible," "participant," "person," "principal," and "voluntarily excluded," as used in this clause, are defined in 2 CFR Parts 180 and 1200. "First Tier Covered Transactions" refers to any covered transaction between a grantee or subgrantee of Federal funds and a participant (such as the prime or general contract). "Lower Tier Covered Transactions" refers to any covered transaction under a First Tier Covered Transaction (such as subcontracts). "First Tier Participant" refers to the participant who has entered into a covered transaction with a grantee or subgrantee of Federal funds (such as the prime or general contractor). "Lower Tier Participant" refers any participant who has entered into a covered transaction with a First Tier Participant or other Lower Tier Participants (such as subcontractors and suppliers).

f. The prospective first tier participant agrees by submitting this proposal that, should the proposed covered transaction be entered into, it shall not knowingly enter into any lower tier covered transaction with a person who is debarred, suspended, declared ineligible, or voluntarily excluded from participation in this covered transaction, unless authorized by the department or agency entering into this transaction.

g. The prospective first tier participant further agrees by submitting this proposal that it will include the clause titled "Certification Regarding Debarment, Suspension, Ineligibility and Voluntary Exclusion-Lower Tier Covered Transactions," provided by the department or contracting agency, entering into this covered transaction, without modification, in all lower tier covered transactions and in all solicitations for lower tier covered transactions exceeding the $25,000 threshold.

h. A participant in a covered transaction may rely upon a certification of a prospective participant in a lower tier covered transaction that is not debarred, suspended, ineligible, or voluntarily excluded from the covered transaction, unless it knows that the certification is erroneous. A participant is responsible for ensuring that its principals are not suspended, debarred, or otherwise ineligible to participate in covered transactions. To verify the eligibility of its principals, as well as the eligibility of any lower tier prospective participants, each participant may, but is not required to, check the Excluded Parties List System website (https://www.epls.gov/), which is compiled by the General Services Administration.

i. Nothing contained in the foregoing shall be construed to require the establishment of a system of records in order to render in good faith the certification required by this clause. The knowledge and information of the prospective participant is not required to exceed that which is normally possessed by a prudent person in the ordinary course of business dealings.

j. Except for transactions authorized under paragraph (f) of these instructions, if a participant in a covered transaction knowingly enters into a lower tier covered transaction with a person who is suspended, debarred, ineligible, or voluntarily excluded from participation in this transaction, in addition to other remedies available to the Federal Government, the department or agency may terminate this transaction for cause or default.

* * * * *

2. Certification Regarding Debarment, Suspension, Ineligibility and Voluntary Exclusion – First Tier Participants:

a. The prospective first tier participant certifies to the best of its knowledge and belief, that it and its principals:

(1) Are not presently debarred, suspended, proposed for debarment, declared ineligible, or voluntarily excluded from participating in covered transactions by any Federal department or agency;

(2) Have not within a three-year period preceding this proposal been convicted of or had a civil judgment rendered against them for commission of fraud or a criminal offense in connection with obtaining, attempting to obtain, or performing a public (Federal, State or local) transaction or contract under a public transaction; violation of Federal or State antitrust statutes or commission of embezzlement, theft, forgery, bribery, falsification or destruction of records, making false statements, or receiving stolen property;

(3) Are not presently indicted for or otherwise criminally or civilly charged by a governmental entity (Federal, State or local) with commission of any of the offenses enumerated in paragraph (a)(2) of this certification; and

(4) Have not within a three-year period preceding this application/proposal had one or more public transactions (Federal, State or local) terminated for cause or default.

b. Where the prospective participant is unable to certify to any of the statements in this certification, such prospective participant shall attach an explanation to this proposal.

2. **Instructions for Certification - Lower Tier Participants:**

(Applicable to all subcontracts, purchase orders and other lower tier transactions requiring prior FHWA approval or estimated to cost $25,000 or more - 2 CFR Parts 180 and 1200)

a. By signing and submitting this proposal, the prospective lower tier is providing the certification set out below.

b. The certification in this clause is a material representation of fact upon which reliance was placed when this transaction was entered into. If it is later determined that the prospective lower tier participant knowingly rendered an erroneous certification, in addition to other remedies available to the Federal Government, the department, or agency with which this transaction originated may pursue available remedies, including suspension and/or debarment.

c. The prospective lower tier participant shall provide immediate written notice to the person to which this proposal is submitted if at any time the prospective lower tier participant learns that its certification was erroneous by reason of changed circumstances.

d. The terms "covered transaction," "debarred," "suspended," "ineligible," "participant," "person," "principal," and "voluntarily excluded," as used in this clause, are defined in 2 CFR Parts 180 and 1200. You may contact the person to which this proposal is submitted for assistance in obtaining a copy of those regulations. "First Tier Covered Transactions" refers to any covered transaction between a grantee or subgrantee of Federal funds and a participant (such as the prime or general contract). "Lower Tier Covered Transactions" refers to any covered transaction under a First Tier Covered Transaction (such as subcontracts). "First Tier Participant" refers to the participant who has entered into a covered transaction with a grantee or subgrantee of Federal funds (such as the prime or general contractor). "Lower Tier Participant" refers any participant who has entered into a covered transaction with a First Tier Participant or other Lower Tier Participants (such as subcontractors and suppliers).

e. The prospective lower tier participant agrees by submitting this proposal that, should the proposed covered transaction be entered into, it shall not knowingly enter into any lower tier covered transaction with a person who is debarred, suspended, declared ineligible, or voluntarily excluded from participation in this covered transaction, unless authorized by the department or agency with which this transaction originated.

f. The prospective lower tier participant further agrees by submitting this proposal that it will include this clause titled "Certification Regarding Debarment, Suspension, Ineligibility and Voluntary Exclusion-Lower Tier Covered Transaction," without modification, in all lower tier covered transactions and in all solicitations for lower tier covered transactions exceeding the $25,000 threshold.

g. A participant in a covered transaction may rely upon a certification of a prospective participant in a lower tier covered transaction that is not debarred, suspended, ineligible, or voluntarily excluded from the covered transaction, unless it knows that the certification is erroneous. A participant is responsible for ensuring that its principals are not suspended, debarred, or otherwise ineligible to participate in covered transactions. To verify the eligibility of its principals, as well as the eligibility of any lower tier prospective participants, each participant may, but is not required to, check the Excluded Parties List System website (https://www.epls.gov/), which is compiled by the General Services Administration.

h. Nothing contained in the foregoing shall be construed to require establishment of a system of records in order to render in good faith the certification required by this clause. The knowledge and information of participant is not required to exceed that which is normally possessed by a prudent person in the ordinary course of business dealings.

i. Except for transactions authorized under paragraph e of these instructions, if a participant in a covered transaction knowingly enters into a lower tier covered transaction with a person who is suspended, debarred, ineligible, or voluntarily excluded from participation in this transaction, in addition to other remedies available to the Federal Government, the

department or agency with which this transaction originated may pursue available remedies, including suspension and/or debarment.

* * * * *

Certification Regarding Debarment, Suspension, Ineligibility and Voluntary Exclusion--Lower Tier Participants:

1. The prospective lower tier participant certifies, by submission of this proposal, that neither it nor its principals is presently debarred, suspended, proposed for debarment, declared ineligible, or voluntarily excluded from participating in covered transactions by any Federal department or agency.

2. Where the prospective lower tier participant is unable to certify to any of the statements in this certification, such prospective participant shall attach an explanation to this proposal.

* * * * *

XI. CERTIFICATION REGARDING USE OF CONTRACT FUNDS FOR LOBBYING

This provision is applicable to all Federal-aid construction contracts and to all related subcontracts which exceed $100,000 (49 CFR 20).

1. The prospective participant certifies, by signing and submitting this bid or proposal, to the best of his or her knowledge and belief, that:

a. No Federal appropriated funds have been paid or will be paid, by or on behalf of the undersigned, to any person for influencing or attempting to influence an officer or employee of any Federal agency, a Member of Congress, an officer or employee of Congress, or an employee of a Member of Congress in connection with the awarding of any Federal contract, the making of any Federal grant, the making of any Federal loan, the entering into of any cooperative agreement, and the extension, continuation, renewal, amendment, or modification of any Federal contract, grant, loan, or cooperative agreement.

b. If any funds other than Federal appropriated funds have been paid or will be paid to any person for influencing or attempting to influence an officer or employee of any Federal agency, a Member of Congress, an officer or employee of Congress, or an employee of a Member of Congress in connection with this Federal contract, grant, loan, or cooperative agreement, the undersigned shall complete and submit Standard Form-LLL, "Disclosure Form to Report Lobbying," in accordance with its instructions.

2. This certification is a material representation of fact upon which reliance was placed when this transaction was made or entered into. Submission of this certification is a prerequisite for making or entering into this transaction imposed by 31 U.S.C. 1352. Any person who fails to file the required certification shall be subject to a civil penalty of not less than $10,000 and not more than $100,000 for each such failure.

3. The prospective participant also agrees by submitting its bid or proposal that the participant shall require that the language of this certification be included in all lower tier subcontracts, which exceed $100,000 and that all such recipients shall certify and disclose accordingly.

ATTACHMENT A - EMPLOYMENT AND MATERIALS PREFERENCE FOR APPALACHIAN DEVELOPMENT HIGHWAY SYSTEM OR APPALACHIAN LOCAL ACCESS ROAD CONTRACTS

This provision is applicable to all Federal-aid projects funded under the Appalachian Regional Development Act of 1965.

1. During the performance of this contract, the contractor undertaking to do work which is, or reasonably may be, done as on-site work, shall give preference to qualified persons who regularly reside in the labor area as designated by the DOL wherein the contract work is situated, or the subregion, or the Appalachian counties of the State wherein the contract work is situated, except:

a. To the extent that qualified persons regularly residing in the area are not available.

b. For the reasonable needs of the contractor to employ supervisory or specially experienced personnel necessary to assure an efficient execution of the contract work.

c. For the obligation of the contractor to offer employment to present or former employees as the result of a lawful collective bargaining contract, provided that the number of nonresident persons employed under this subparagraph (1c) shall not exceed 20 percent of the total number of employees employed by the contractor on the contract work, except as provided in subparagraph (4) below.

2. The contractor shall place a job order with the State Employment Service indicating (a) the classifications of the laborers, mechanics and other employees required to perform the contract work, (b) the number of employees required in each classification, (c) the date on which the participant estimates such employees will be required, and (d) any other pertinent information required by the State Employment Service to complete the job order form. The job order may be placed with the State Employment Service in writing or by telephone. If during the course of the contract work, the information submitted by the contractor in the original job order is substantially modified, the participant shall promptly notify the State Employment Service.

3. The contractor shall give full consideration to all qualified job applicants referred to him by the State Employment Service. The contractor is not required to grant employment to any job applicants who, in his opinion, are not qualified to perform the classification of work required.

4. If, within one week following the placing of a job order by the contractor with the State Employment Service, the State Employment Service is unable to refer any qualified job applicants to the contractor, or less than the number requested, the State Employment Service will forward a certificate to the contractor indicating the unavailability of applicants. Such certificate shall be made a part of the contractor's permanent project records. Upon receipt of this certificate, the contractor may employ persons who do not normally reside in the labor area to fill positions covered by the certificate, notwithstanding the provisions of subparagraph (1c) above.

5. The provisions of 23 CFR 633.207(e) allow the contracting agency to provide a contractual preference for the use of mineral resource materials native to the Appalachian region.

6. The contractor shall include the provisions of Sections 1 through 4 of this Attachment A in every subcontract for work which is, or reasonably may be, done as on-site work.

STANDARD CLAUSES FOR NEW YORK STATE CONTRACTS

TABLE OF CONTENTS

		Page
1.	Executory Clause	TF-B2
2.	Non-Assignment Clause	TF-B2
3.	Comptroller's Approval	TF-B2
4.	Workers' Compensation Benefits	TF-B2
5.	Non-Discrimination Requirements	TF-B2
6.	Wage and Hours Provisions	TF-B2
7.	Non-Collusive Bidding Certification	TF-B3
8.	International Boycott Prohibition	TF-B3
9.	Set-Off Rights	TF-B3
10.	Records	TF-B3
11.	Identifying Information and Privacy Notification	TF-B3
12.	Equal Employment Opportunities For Minorities and Women	TF-B3 - TF-B4
13.	Conflicting Terms	TF-B4
14.	Governing Law	TF-B4
15.	Late Payment	TF-B4
16.	No Arbitration	TF-B4
17.	Service of Process	TF-B4
18.	Prohibition on Purchase of Tropical Hardwoods	TF-B4 - TF-B5
19.	MacBride Fair Employment Principles	TF-B5
20.	Omnibus Procurement Act of 1992	TF-B5
21.	Reciprocity and Sanctions Provisions	TF-B5
22.	Compliance with New York State Information Security Breach and Notification Act	TF-B5
23.	Compliance with Consultant Disclosure Law	TF-B5 – TF-B6
24.	Procurement Lobbying	TF-B6
25.	Certification of Registration to Collect Sales and Compensating Use Tax by Certain State Contractors, Affiliates and Subcontractors	TF-B5
26.	Iran Divestment Act	TF-B5

STANDARD CLAUSES FOR NYS CONTRACTS

The parties to the attached contract, license, lease, amendment or other agreement of any kind (hereinafter, "the contract" or "this contract") agree to be bound by the following clauses which are hereby made a part of the contract (the word "Contractor" herein refers to any party other than the State, whether a contractor, licenser, licensee, lessor, lessee or any other party):

1. EXECUTORY CLAUSE. In accordance with Section 41 of the State Finance Law, the State shall have no liability under this contract to the Contractor or to anyone else beyond funds appropriated and available for this contract.

2. NON-ASSIGNMENT CLAUSE. In accordance with Section 138 of the State Finance Law, this contract may not be assigned by the Contractor or its right, title or interest therein assigned, transferred, conveyed, sublet or otherwise disposed of without the State's previous written consent, and attempts to do so are null and void. Notwithstanding the foregoing, such prior written consent of an assignment of a contract let pursuant to Article XI of the State Finance Law may be waived at the discretion of the contracting agency and with the concurrence of the State Comptroller where the original contract was subject to the State Comptroller's approval, where the assignment is due to a reorganization, merger or consolidation of the Contractor's business entity or enterprise. The State retains its right to approve an assignment and to require that any Contractor demonstrate its responsibility to do business with the State. The Contractor may, however, assign its right to receive payments without the State's prior written consent unless this contract concerns Certificates of Participation pursuant to Article 5-A of the State Finance Law.

3. COMPTROLLER'S APPROVAL. In accordance with Section 112 of the State Finance Law (or, if this contract is with the State University or City University of New York, Section 355 or Section 6218 of the Education Law), if this contract exceeds $50,000 (or the minimum thresholds agreed to by the Office of the State Comptroller for certain S.U.N.Y. and C.U.N.Y. contracts), or if this is an amendment for any amount to a contract which, as so amended, exceeds said statutory amount, or if, by this contract, the State agrees to give something other than money when the value or reasonably estimated value of such consideration exceeds $10,000, it shall not be valid, effective or binding upon the State until it has been approved by the State Comptroller and filed in his office. Comptroller's approval of contracts let by the Office of General Services is required when such contracts exceed $85,000 (State Finance Law Section 163.6-a). However, such pre-approval shall not be required for any contract established as a centralized contract through the Office of General Services or for a purchase order or other transaction issued under such centralized contract.

4. WORKERS' COMPENSATION BENEFITS. In accordance with Section 142 of the State Finance Law, this contract shall be void and of no force and effect unless the Contractor shall provide and maintain coverage during the life of this contract for the benefit of such employees as are required to be covered by the provisions of the Workers' Compensation Law.

5. NON-DISCRIMINATION REQUIREMENTS. To the extent required by Article 15 of the Executive Law (also known as the Human Rights Law) and all other State and Federal statutory and constitutional non-discrimination provisions, the Contractor will not discriminate against any employee or applicant for employment because of race, creed, color, sex (including gender identity or expression), national origin, sexual orientation, military status, age, disability, predisposing genetic characteristics, marital status or domestic violence victim status. Furthermore, in accordance with Section 220-e of the Labor Law, if this is a contract for the construction, alteration or repair of any public building or public work or for the manufacture, sale or distribution of materials, equipment or supplies, and to the extent that this contract shall be performed within the State of New York, Contractor agrees that neither it nor its subcontractors shall, by reason of race, creed, color, disability, sex, or national origin: (a) discriminate in hiring against any New York State citizen who is qualified and available to perform the work; or (b) discriminate against or intimidate any employee hired for the performance of work under this contract. If this is a building service contract as defined in Section 230 of the Labor Law, then, in accordance with Section 239 thereof, Contractor agrees that neither it nor its subcontractors shall by reason of race, creed, color, national origin, age, sex or disability: (a) discriminate in hiring against any New York State citizen who is qualified and available to perform the work; or (b) discriminate against or intimidate any employee hired for the performance of work under this contract. Contractor is subject to fines of $50.00 per person per day for any violation of Section 220-e or Section 239 as well as possible termination of this contract and forfeiture of all moneys due hereunder for a second or subsequent violation.

6. WAGE AND HOURS PROVISIONS. If this is a public work contract covered by Article 8 of the Labor Law or a building service contract covered by Article 9 thereof, neither Contractor's employees nor the employees of its subcontractors may be required or permitted to work more than the number of hours or days stated in said statutes, except as otherwise provided in the Labor Law and as set forth in prevailing wage and supplement schedules issued by the State Labor Department. Furthermore, Contractor and its subcontractors must pay at least the prevailing wage rate and pay or provide the prevailing supplements, including the premium rates for overtime pay, as determined by the State Labor Department in accordance with the Labor Law. Additionally, effective April 28, 2008, if this is a public work contract covered by Article 8 of the Labor Law, the Contractor understands and agrees that the filing of payrolls in a manner consistent with Subdivision 3-a of Section 220 of the Labor Law shall be a condition precedent to payment by the State of

any State approved sums due and owing for work done upon the project.

7. NON-COLLUSIVE BIDDING CERTIFICATION. In accordance with Section 139-d of the State Finance Law, if this contract was awarded based upon the submission of bids, Contractor affirms, under penalty of perjury, that its bid was arrived at independently and without collusion aimed at restricting competition. Contractor further affirms that, at the time Contractor submitted its bid, an authorized and responsible person executed and delivered to the State a non-collusive bidding certification on Contractor's behalf.

8. INTERNATIONAL BOYCOTT PROHIBITION. In accordance with Section 220-f of the Labor Law and Section 139-h of the State Finance Law, if this contract exceeds $5,000, the Contractor agrees, as a material condition of the contract, that neither the Contractor nor any substantially owned or affiliated person, firm, partnership or corporation has participated, is participating, or shall participate in an international boycott in violation of the federal Export Administration Act of 1979 (50 USC App. Sections 2401 et seq.) or regulations thereunder. If such Contractor, or any of the aforesaid affiliates of Contractor, is convicted or is otherwise found to have violated said laws or regulations upon the final determination of the United States Commerce Department or any other appropriate agency of the United States subsequent to the contract's execution, such contract, amendment or modification thereto shall be rendered forfeit and void. The Contractor shall so notify the State Comptroller within five (5) business days of such conviction, determination or disposition of appeal (2NYCRR 105.4).

9. SET-OFF RIGHTS. The State shall have all of its common law, equitable and statutory rights of set-off. These rights shall include, but not be limited to, the State's option to withhold for the purposes of set-off any moneys due to the Contractor under this contract up to any amounts due and owing to the State with regard to this contract, any other contract with any State department or agency, including any contract for a term commencing prior to the term of this contract, plus any amounts due and owing to the State for any other reason including, without limitation, tax delinquencies, fee delinquencies or monetary penalties relative thereto. The State shall exercise its set-off rights in accordance with normal State practices including, in cases of set-off pursuant to an audit, the finalization of such audit by the State agency, its representatives, or the State Comptroller.

10. RECORDS. The Contractor shall establish and maintain complete and accurate books, records, documents, accounts and other evidence directly pertinent to performance under this contract (hereinafter, collectively, "the Records"). The Records must be kept for the balance of the calendar year in which they were made and for six (6) additional years thereafter. The State Comptroller, the Attorney General and any other person or entity authorized to conduct an examination, as well as the agency or agencies involved in this contract, shall have access to the Records during normal business hours at an office of the Contractor within the State of New York or, if no such office is available, at a mutually agreeable and reasonable venue within the State, for the term specified above for the purposes of inspection, auditing and copying. The State shall take reasonable steps to protect from public disclosure any of the Records which are exempt from disclosure under Section 87 of the Public Officers Law (the "Statute") provided that: (i) the Contractor shall timely inform an appropriate State official, in writing, that said records should not be disclosed; and (ii) said records shall be sufficiently identified; and (iii) designation of said records as exempt under the Statute is reasonable. Nothing contained herein shall diminish, or in any way adversely affect, the State's right to discovery in any pending or future litigation.

11. IDENTIFYING INFORMATION AND PRIVACY NOTIFICATION. (a) Identification Number(s). Every invoice or New York State Claim for Payment submitted to a New York State agency by a payee, for payment for the sale of goods or services or for transactions (e.g., leases, easements, licenses, etc.) related to real or personal property must include the payee's identification number. The number is any or all of the following: (i) the payee's Federal employer identification number, (ii) the payee's Federal social security number, and/or (iii) the payee's Vendor Identification Number assigned by the Statewide Financial System. Failure to include such number or numbers may delay payment. Where the payee does not have such number or numbers, the payee, on its invoice or Claim for Payment, must give the reason or reasons why the payee does not have such number or numbers.

(b) Privacy Notification. (1) The authority to request the above personal information from a seller of goods or services or a lessor of real or personal property, and the authority to maintain such information, is found in Section 5 of the State Tax Law. Disclosure of this information by the seller or lessor to the State is mandatory. The principal purpose for which the information is collected is to enable the State to identify individuals, businesses and others who have been delinquent in filing tax returns or may have understated their tax liabilities and to generally identify persons affected by the taxes administered by the Commissioner of Taxation and Finance. The information will be used for tax administration purposes and for any other purpose authorized by law. (2) The personal information is requested by the purchasing unit of the agency contracting to purchase the goods or services or lease the real or personal property covered by this contract or lease. The information is maintained in the Statewide Financial System by the Vendor Management Unit within the Bureau of State Expenditures, Office of the State Comptroller, 110 State Street, Albany, New York 12236.

12. EQUAL EMPLOYMENT OPPORTUNITIES FOR MINORITIES AND WOMEN. In accordance with Section 312 of the Executive Law and 5 NYCRR 143, if this contract is: (i) a written agreement or purchase order instrument, providing for a total expenditure in excess of $25,000.00,

whereby a contracting agency is committed to expend or does expend funds in return for labor, services, supplies, equipment, materials or any combination of the foregoing, to be performed for, or rendered or furnished to the contracting agency; or (ii) a written agreement in excess of $100,000.00 whereby a contracting agency is committed to expend or does expend funds for the acquisition, construction, demolition, replacement, major repair or renovation of real property and improvements thereon; or (iii) a written agreement in excess of $100,000.00 whereby the owner of a State assisted housing project is committed to expend or does expend funds for the acquisition, construction, demolition, replacement, major repair or renovation of real property and improvements thereon for such project, then the following shall apply and by signing this agreement the Contractor certifies and affirms that it is Contractor's equal employment opportunity policy that:

(a) The Contractor will not discriminate against employees or applicants for employment because of race, creed, color, national origin, sex, age, disability or marital status, shall make and document its conscientious and active efforts to employ and utilize minority group members and women in its work force on State contracts and will undertake or continue existing programs of affirmative action to ensure that minority group members and women are afforded equal employment opportunities without discrimination. Affirmative action shall mean recruitment, employment, job assignment, promotion, upgradings, demotion, transfer, layoff, or termination and rates of pay or other forms of compensation;

(b) at the request of the contracting agency, the Contractor shall request each employment agency, labor union, or authorized representative of workers with which it has a collective bargaining or other agreement or understanding, to furnish a written statement that such employment agency, labor union or representative will not discriminate on the basis of race, creed, color, national origin, sex, age, disability or marital status and that such union or representative will affirmatively cooperate in the implementation of the Contractor's obligations herein; and

(c) the Contractor shall state, in all solicitations or advertisements for employees, that, in the performance of the State contract, all qualified applicants will be afforded equal employment opportunities without discrimination because of race, creed, color, national origin, sex, age, disability or marital status.

Contractor will include the provisions of "a", "b", and "c" above, in every subcontract over $25,000.00 for the construction, demolition, replacement, major repair, renovation, planning or design of real property and improvements thereon (the "Work") except where the Work is for the beneficial use of the Contractor. Section 312 does not apply to: (i) work, goods or services unrelated to this contract; or (ii) employment outside New York State. The State shall consider compliance by a contractor or subcontractor with the requirements of any federal law concerning equal employment opportunity which effectuates the purpose of this section. The contracting agency shall determine whether the imposition of the requirements of the provisions hereof duplicate or conflict with any such federal law and if such duplication or conflict exists, the contracting agency shall waive the applicability of Section 312 to the extent of such duplication or conflict. Contractor will comply with all duly promulgated and lawful rules and regulations of the Department of Economic Development's Division of Minority and Women's Business Development pertaining hereto.

13. CONFLICTING TERMS. In the event of a conflict between the terms of the contract (including any and all attachments thereto and amendments thereof) and the terms of this Appendix A, the terms of this Appendix A shall control.

14. GOVERNING LAW. This contract shall be governed by the laws of the State of New York except where the Federal supremacy clause requires otherwise.

15. LATE PAYMENT. Timeliness of payment and any interest to be paid to Contractor for late payment shall be governed by Article 11-A of the State Finance Law to the extent required by law.

16. NO ARBITRATION. Disputes involving this contract, including the breach or alleged breach thereof, may not be submitted to binding arbitration (except where statutorily authorized), but must, instead, be heard in a court of competent jurisdiction of the State of New York.

17. SERVICE OF PROCESS. In addition to the methods of service allowed by the State Civil Practice Law & Rules ("CPLR"), Contractor hereby consents to service of process upon it by registered or certified mail, return receipt requested. Service hereunder shall be complete upon Contractor's actual receipt of process or upon the State's receipt of the return thereof by the United States Postal Service as refused or undeliverable. Contractor must promptly notify the State, in writing, of each and every change of address to which service of process can be made. Service by the State to the last known address shall be sufficient. Contractor will have thirty (30) calendar days after service hereunder is complete in which to respond.

18. PROHIBITION ON PURCHASE OF TROPICAL HARDWOODS. The Contractor certifies and warrants that all wood products to be used under this contract award will be in accordance with, but not limited to, the specifications and provisions of Section 165 of the State Finance Law, (Use of Tropical Hardwoods) which prohibits purchase and use of tropical hardwoods, unless specifically exempted, by the State or any governmental agency or political subdivision or public benefit corporation. Qualification for an exemption under this law will be the responsibility of the contractor to establish to meet with the approval of the State.

In addition, when any portion of this contract involving the use of woods, whether supply or installation, is to be performed by any subcontractor, the prime Contractor will indicate and certify in the submitted bid proposal that the subcontractor has been informed and is in compliance with specifications and provisions regarding use of tropical hardwoods as detailed in §165 State Finance Law. Any such use must meet with the approval of the State; otherwise, the bid may not be considered responsive. Under bidder certifications, proof of qualification for exemption will be the responsibility of the Contractor to meet with the approval of the State.

19. MACBRIDE FAIR EMPLOYMENT PRINCIPLES. (APPLICABLE ONLY IN NON-FEDERAL AID NEW YORK STATE CONTRACTS). In accordance with the MacBride Fair Employment Principles (Chapter 807 of the Laws of 1992), the Contractor hereby stipulates that the Contractor either (a) has no business operations in Northern Ireland, or (b) shall take lawful steps in good faith to conduct any business operations in Northern Ireland in accordance with the MacBride Fair Employment Principles (as described in Section 165 of the New York State Finance Law), and shall permit independent monitoring of compliance with such principles.

20. OMNIBUS PROCUREMENT ACT OF 1992. (APPLICABLE ONLY IN NON-FEDERAL AID NEW YORK STATE CONTRACTS). It is the policy of New York State to maximize opportunities for the participation of New York State business enterprises, including minority and women-owned business enterprises as bidders, subcontractors and suppliers on its procurement contracts.

Information on the availability of New York State subcontractors and suppliers is available from:

NYS Department of Economic Development
Division for Small Business
Albany, New York 12245
Telephone: 518-292-5100
Fax: 518-292-5884
email: opa@esd.ny.gov

A directory of certified minority and women-owned business enterprises is available from:

NYS Department of Economic Development
Division of Minority and Women's Business Development
633 Third Avenue
New York, NY 10017
212-803-2414
email: mwbecertification@esd.ny.gov
https://ny.newnycontracts.com/FrontEnd/VendorSearchPublic.asp

The Omnibus Procurement Act of 1992 requires that by signing this bid proposal or contract, as applicable, Contractors certify that whenever the total bid amount is greater than $1 million:

(a) The Contractor has made reasonable efforts to encourage the participation of New York State Business Enterprises as suppliers and subcontractors, including certified minority and women-owned business enterprises, on this project, and has retained the documentation of these efforts to be provided upon request to the State;

(b) The Contractor has complied with the Federal Equal Opportunity Act of 1972 (P.L. 92-261), as amended;

(c) The Contractor agrees to make reasonable efforts to provide notification to New York State residents of employment opportunities on this project through listing any such positions with the Job Service Division of the New York State Department of Labor, or providing such notification in such manner as is consistent with existing collective bargaining contracts or agreements. The Contractor agrees to document these efforts and to provide said documentation to the State upon request; and

(d) The Contractor acknowledges notice that the State may seek to obtain offset credits from foreign countries as a result of this contract and agrees to cooperate with the State in these efforts.

21. RECIPROCITY AND SANCTIONS PROVISIONS. Bidders are hereby notified that if their principal place of business is located in a country, nation, province, state or political subdivision that penalizes New York State vendors, and if the goods or services they offer will be substantially produced or performed outside New York State, the Omnibus Procurement Act 1994 and 2000 amendments (Chapter 684 and Chapter 383, respectively) require that they be denied contracts which they would otherwise obtain. NOTE: As of May 15, 2002, the list of discriminatory jurisdictions subject to this provision includes the states of South Carolina, Alaska, West Virginia, Wyoming, Louisiana and Hawaii. Contact NYS Department of Economic Development for a current list of jurisdictions subject to this provision.

22. COMPLIANCE WITH NEW YORK STATE INFORMATION SECURITY BREACH AND NOTIFICATION ACT. Contractor shall comply with the provisions of the New York State Information Security Breach and Notification Act (General Business Law Section 899-aa; State Technology Law Section 208).

23. COMPLIANCE WITH CONSULTANT DISCLOSURE LAW. If this is a contract for consulting services, defined for purposes of this requirement to include analysis, evaluation, research, training, data processing, computer programming, engineering, environmental, health, and mental health services, accounting, auditing, paralegal, legal or similar services, then, in accordance with Section 163 (4-g) of the State Finance Law (as amended by Chapter 10 of

the Laws of 2006), the Contractor shall timely, accurately and properly comply with the requirement to submit an annual employment report for the contract to the agency that awarded the contract, the Department of Civil Service and the State Comptroller.

24. **PROCUREMENT LOBBYING.** To the extent this agreement is a "procurement contract" as defined by State Finance Law Sections 139-j and 139-k, by signing this agreement the contractor certifies and affirms that all disclosures made in accordance with State Finance Law Sections 139-j and 139-k are complete, true and accurate. In the event such certification is found to be intentionally false or intentionally incomplete, the State may terminate the agreement by providing written notification to the Contractor in accordance with the terms of the agreement.

25. **CERTIFICATION OF REGISTRATION TO COLLECT SALES AND COMPENSATING USE TAX BY CERTAIN STATE CONTRACTORS, AFFILIATES AND SUBCONTRACTORS.**
To the extent this agreement is a contract as defined by Tax Law Section 5-a, if the contractor fails to make the certification required by Tax Law Section 5-a or if during the term of the contract, the Department of Taxation and Finance or the covered agency, as defined by Tax Law 5-a, discovers that the certification, made under penalty of perjury, is false, then such failure to file or false certification shall be a material breach of this contract and this contract may be terminated, by providing written notification to the Contractor in accordance with the terms of the agreement, if the covered agency determines that such action is in the best interest of the State.

26. **IRAN DIVESTMENT ACT**. By entering into this Agreement, Contractor certifies in accordance with State Finance Law §165-a that it is not on the "Entities Determined to be Non-Responsive Bidders/Offerers pursuant to the New York State Iran Divestment Act of 2012" ("Prohibited Entities List") posted at: http://www.ogs.ny.gov/about/regs/docs/ListofEntities.pdf

Contractor further certifies that it will not utilize on this Contract any subcontractor that is identified on the Prohibited Entities List. Contractor agrees that should it seek to renew or extend this Contract, it must provide the same certification at the time the Contract is renewed or extended. Contractor also agrees that any proposed Assignee of this Contract will be required to certify that it is not on the Prohibited Entities List before the contract assignment will be approved by the State.

During the term of the Contract, should the state agency receive information that a person (as defined in State Finance Law §165-a) is in violation of the above-referenced certifications, the state agency will review such information and offer the person an opportunity to respond. If the person fails to demonstrate that it has ceased its engagement in the investment activity which is in violation of the Act within 90 days after the determination of such violation, then the state agency shall take such action as may be appropriate and provided for by law, rule, or contract, including, but not limited to, imposing sanctions, seeking compliance, recovering damages, or declaring the Contractor in default.

The state agency reserves the right to reject any bid, request for assignment, renewal or extension for an entity that appears on the Prohibited Entities List prior to the award, assignment, renewal or extension of a contract, and to pursue a responsibility review with respect to any entity that is awarded a contract and appears on the Prohibited Entities list after contract award.

LABOR AND EMPLOYMENT

The provisions of NYS Labor Law, as amended, and referred to in *Standard Clauses for All New York State Contracts*, shall be applicable. On contracts financed with Federal-Aid, any provisions of NYS Labor Law that are in conflict with mandatory Federal-Aid construction contract compliance requirements, as contained in 23 CFR 635.117 are superseded. Any provisions of NYS Labor Law that are not in conflict with mandatory Federal-Aid construction contract compliance requirements, or the Davis-Bacon Act, but are more restrictive, shall apply.

The Contractor shall directly employ those members of its own organization. Employee leasing and other similar arrangements under which workers are employed by another organization are not permitted. No procedures or requirement shall be imposed by any state which will operate to discriminate against the employment of labor from any other state, possession or territory of the United States, in the construction of a Federal-Aid project. The selection of labor to be employed by the Contractor on any Federal-Aid project shall be of its choosing.

The Contractor shall not use convict labor unless performed by convicts who are on parole, supervised release, or probation for construction, maintenance or any other purpose at the site or within the contract limits from the time of contract award until contract final acceptance by the Department.

A. Wages. The Department will identify in the contract proposal whether the NYS Department of Labor (NYSDOL) has determined the work under the contract to be prevailing wage eligible, and if so, provide the Prevailing Rate Case (PRC) number. The PRC number is found on NYSDOL Form PW-200. The Contractor shall ensure that workers are paid the appropriate wages and supplemental (fringe) benefits. If the contract is prevailing wage eligible, all on-site work shall be paid prevailing wages. When both State and Federal prevailing wages apply, the Contractor shall pay the higher of the wages, and the higher of the combination of the wages and supplemental (fringe) benefits. The Contractor shall obtain periodic wage rate schedule updates from the NYSDOL. Wage rate amendments and supplements are available on the NYSDOL web site at *www.labor.ny.gov*. All changes or clarification of labor classification(s) and applicability of prevailing wage rates shall be obtained in writing from the Office of the Director, NYSDOL Bureau of Public Work. The Contractor shall include the cost of changes in wage rate schedules and supplements (fringes) over the contract duration in the contract bid prices.

B. Overtime Dispensation. All bidders, in submitting their bids, should base their bids and work progression on the assumption that Overtime Dispensation pursuant to Article 8 of the New York State Labor Law, for any workers, laborers, and mechanics to work more than 8 hours in any one calendar day or more than 5 days in any one week will not be granted for any operation for the contract duration. Regardless of approval or disapproval of overtime by the NYSDOL, no adjustment will be made in any bid prices.

Subsequent to award, where the contract proposal has imposed specific scheduling and/or phasing requirements or where it is determined by the Department to be in the best interest of the public, the Department may process, for approval by the NYSDOL, requests for overtime dispensation on certain specific operations.

The Contractor shall submit requests for overtime dispensation to the Department on Form PW- 30, Application for Dispensation for Hours, which will be provided by the Engineer upon request. The Department will review applications for overtime dispensation submitted by the Contractor associated with contracts subject to (A+B) Bidding, Incentive/Disincentive (I/D) or Lane Rental work favorably, but the application should not request more than 60 hours per week. The 60 hours per week may be either 6 - 10 hour days or 5 - 12 hour days. Overtime dispensations will be supported by the Department to advance Department goals and priorities, subject to specific circumstances and conditions associated with each contract.

The Department cannot guarantee that the NYSDOL will grant dispensation from restrictions pursuant to the provisions of Article 8 of the State Labor Law, however with the Department's certification, it is anticipated that they will act favorably, provided that the Contractor is in compliance with Labor Law requirements at the time of application.

C. Payrolls. The Contractor shall provide the Engineer, each week, a certified payroll and statement of compliance with respect to the wages paid each of its employees subject to prevailing wage requirements and a certified payroll from each Subcontractor engaged on work during the preceding weekly payroll period. If the Contractor or Subcontractor does not maintain a place of business in New York State and the amount of the contract exceeds $25,000., payroll records and certifications shall be kept on the worksite.

Certified payrolls shall contain for each employee, name, race, gender, home address, an individually identifying number (e.g. the last 4 digits of the employee's social security number), work class, hours worked, wage rate, supplemental (fringe) benefits paid or provided, payroll taxes, withholdings and actual wages paid. Certified payrolls shall not include full social security numbers of employees. Certified payrolls shall be submitted on Form WH-347 or Form HC-231-1 for Federal- Aid contracts and on HC-231-1 for non Federal-Aid contracts. At the Contractor's option, other payroll formats, which supply the required data and certifications, may be used. Each payroll submitted shall be accompanied by a Statement of Compliance signed by the Contractor.

Contractors and subcontractors shall maintain the full social security number and current address of each covered worker, and shall provide them upon request to NYSDOL or USDOL for purposes of an investigation or audit of compliance with prevailing wage requirements. Contractors may require subcontractors to provide addresses and social security numbers to the Contractor for its own records, without weekly submission to the Department.

D. Training. An apprentice is defined as an individual who is enrolled in an apprenticeship training program that is registered with the NYS Department of Labor. A list of approved programs is available from the NYS Department of Labor at *www.labor.ny.gov/apprenticeship/sponsor/index.asp*.

A trainee is defined as an individual who is enrolled in an On-the-Job Training (OJT) program that is approved by the Federal Highway Administration (FHWA).

A number of sources to obtain training for apprentices/trainees are available. These include:

- A NYSDOL-approved apprenticeship program sponsored by a union or a temporary project level agreement with a union which has a NYSDOL approved apprenticeship program.
- A NYSDOL-approved apprenticeship program sponsored by a contractor.
- A NYSDOL-approved apprenticeship program sponsored by a contractor signatory with an apprenticeship sponsor consortium for certain services.
- An FHWA-approved OJT program (where applicable).

Approved OJT Programs are currently limited to apprenticeable occupations as determined by NYSDOL or USDOL.

Training under Training Special Provisions, if required, will be shown in the contract documents. In order to fulfill training requirements required under Training Special Provisions and/or *Equal Employment Opportunity Requirements*, training should begin as early as possible during a construction contract. The Department recommends that all bidders have an approved apprenticeship or OJT program prior to bidding.

The Contractor shall furnish the apprentice/trainee a copy of the program to be followed in providing the training. The Contractor shall provide each apprentice/trainee with a certification showing the type and length of training satisfactorily completed.

When training is required under Training Special Provisions and/or *Equal Employment Opportunity Requirements*, the Contractor shall designate to the Engineer, at the preconstruction meeting, a person (or persons) from its existing workforce as the Trainer and Training Coordinator for any apprentice(s)/ trainee(s).

The Trainer shall:
1. Be located on the contract site generally on a daily basis; and
2. Be responsible for the day-to-day supervision and training of persons on the contract; and
3. Be responsible for the preparation and submission of a monthly training progress report, after consultation with designated apprentices/trainees.

The Training Coordinator shall:
1. Be knowledgeable about the contract and the Apprenticeship/OJT programs to be used; and
2. Be responsible for ensuring on-the-job orientation of apprentice/trainees; and
3. Be responsible for ensuring meaningful and effective training for the duration of training.

PUBLIC NOTICES

Before commencing any work on the site, the Contractor shall provide a satisfactory weather resistant surface, and post, in a location accessible to all workers, a copy of the NYSDOL schedules of prevailing wages and supplements for this contract, a copy of all redeterminations of such schedules for the contract, the Workers' Compensation Law notice, required safety notices, and all other notices required by law to be posted at the site. The Contractor shall maintain such notices in a legible manner and shall replace any notice or schedule which is damaged, defaced, illegible or removed for any reason. The notices shall be maintained until all work on the site is complete.

(NO TEXT ON THIS PAGE)

NOTICE TO ALL PROSPECTIVE BIDDERS
FEDERAL-AID CONTRACTS

ASSURANCE OF NON-DISCRIMINATION

The New York State Department of Transportation, in accordance with Title VI of the Civil Rights Act of 1964, 78 Stat. 252, 42 U.S.C. 2000d to 2000d-4 and Title 49, Code of Federal Regulations, Department of Transportation, Subtitle A, Office of the Secretary, Part 21, Nondiscrimination in Federally-assisted programs of the Department of Transportation and Title 23 Code of Federal Regulations, Part 200, Title VI Program and Related Statutes, as amended, issued pursuant to such Acts, hereby notifies all bidders that it will affirmatively ensure that in any contract entered into pursuant to this advertisement, disadvantaged business enterprises will be afforded full opportunity to submit bids in response to this invitation and will not be discriminated against on the grounds of race, color, national origin, sex, age, disability/handicap and income status in consideration for an award.

SUBCONTRACTS

The attention of the Contractor is directed to the requirement that the standard contract clauses, as set forth in the Proposal and in the Labor Compliance Manual (Federal-aid Construction, Appendix D-2, 3) must be physically incorporated in all subcontracts.

Copies of the Labor Compliance Manual referred to above may be examined in the office of the Regional Director.

SUPPLEMENTAL TITLE VI PROVISIONS (CIVIL RIGHTS ACT)

(To be included in all contracts)

During the performance of this contract, the contractor, for itself, its assignees and successors in interest (hereinafter referred to as the "contractor") agrees as follows:

(1) Compliance with Regulations: The contractor shall comply with the Regulation relative to nondiscrimination in Federally assisted programs of the Department of Transportation of the United States, Title 49, Code of Federal Regulations, Part 21, and the Federal Highway Administration (hereinafter "FHWA") Title 23, Code of Federal Regulations, Part 200 as they may be amended from time to time, (hereinafter referred to as the Regulations), which are herein incorporated by reference and made a part of this contract.

(2) Nondiscrimination: The Contractor, with regard to the work performed by it during the contract, shall not discriminate on the grounds of race, religion, age, color, sex or national origin, sex, age, and disability/handicap in the selection and retention of subcontractors, including procurements of materials and leases of equipment. The contractor shall not participate either directly or indirectly in the discrimination prohibited by 49 CFR, section 21.5 of the Regulations, including employment practices when the contract covers a program set forth in Appendix B of the Regulations.

(3) Solicitations for Subcontractors, Including Procurements of Materials and Equipment: In all solicitations either by competitive bidding or negotiation made by the contractor for work to be performed under a subcontract, including procurements of materials or leases of equipment, each potential subcontractor or supplier shall be notified by the contractor of the contractor's obligations under this contract and the Regulations relative to nondiscrimination on the grounds of race, color, or national origin, sex, age, and disability/handicap.

(4) Information and Reports: The contractor shall provide all information and reports required by the Regulations or directives issued pursuant thereto, and shall permit access to its books, records, accounts, other sources of information, and its facilities as may be determined by NYSDOT or the FHWA to be pertinent to ascertain compliance with such Regulations, orders and instructions. Where any information required of a contractor is in the exclusive possession of another who fails or refuses to furnish this information the contractor shall so certify to NYSDOT's Office of Civil Rights or FHWA, as appropriate, and shall set forth what efforts it has made to obtain the information.

(5) Sanctions for Noncompliance: In the event of the contractor's noncompliance with the nondiscrimination provisions of this contract, NYSDOT shall impose such contract sanctions as it or the FHWA may determine to be appropriate, including, but not limited to:

a) Withholding of payments to the contractor under the contract until the contractor complies; and/or

b) Cancellation, termination or suspension of the contract, in whole or in part.

(6) Incorporation of Provisions: The contractor shall include the provisions of paragraphs (1) through (6) in every subcontract, including procurements of materials and leases of equipment, unless exempt by the Regulations, or directives issued pursuant thereto.

The contractor shall take such action with respect to any subcontractor procurement as NYSDOT or the FHWA may direct as a means of enforcing such provisions including sanctions for non-compliance: Provided, however, that in the event a contractor becomes involved in, or is threatened with, litigation with a subcontractor or supplier as a result of such direction, the contractor may request NYSDOT to enter into such litigation to protect the interests of NYSDOT, and, in addition, the contractor may request the United States to enter into such litigation to protect the interests of the United States.

Disadvantaged Business Enterprise Requirements

DBE UTILIZATION. DBE refers to a Disadvantaged Business Enterprise (DBE).The DBE program applies to Federal-Aid contracts. The program seeks to:

- Ensure nondiscrimination in award and administration of contracts;
- Ensure that only firms that fully meet DBE eligibility standards are permitted to participate in the DBE program;
- Help remove barriers to the participation of DBEs in the performance of contracts;
- Create a level playing field on which DBEs can fairly compete for contracts; and
- Assist in the development of firms that can compete successfully in the construction industry outside the DBE programs.

The parties to this contract shall take all necessary and reasonable steps in accordance with the laws, rules and regulations cited in this subsection to promote the objectives outlined above. The Contractor shall comply with the applicable laws, rules and regulations and the DBE Program Assurance stated below.

DBE Program Assurance. The Contractor or Subcontractor shall not discriminate on the basis of race, color, national origin, or sex in the award and performance of this contract. The Contractor shall carry out applicable requirements of 49 CFR 26 in the award and administration of Federal-Aid contracts. Failure by the Contractor to carry out these requirements is a material breach of this contract, which may result in the termination of this contract or such other remedy as the Department deems appropriate, which may include, but is not limited to: (1) withholding contract payments; (2) assessing sanctions; (3) liquidated damages; and/or (4) disqualifying the Contractor from future bidding as non-responsible.

A. Statutory Authority. The statutory authority for the DBE Program is contained in the Surface Transportation Assistance Act of 1982 (Public Law 97-424, §105(f)), the Surface Transportation and Uniform Relocation Assistance Act of 1987 (Public Law 100-17, §106(c)), the Intermodal Surface Transportation Efficiency Act of 1991, and the Transportation Equity Act of the 21st Century. New York State has enacted Section 85 of the Highway Law and Section 428 of the Transportation Law. Regulations have been promulgated under 49 CFR 21, 49 CFR 26 and 17 NYCRR 35.

B. DBE Goal(s). Federal-aid contracts have a single DBE goal. The Department will monitor the Contractor's attainments towards DBE goals in accordance with Attachment H, *Civil Rights Monitoring and Reporting*.

1. Established Goal(s). The Department may have established contract utilization goal(s) for DBEs, which are expressed as a percentage of the total contract price. The goal(s) are stated in the proposal and remain in effect throughout the life of the contract. In executing the contract or bid documents the Bidder declares that it subscribes to the utilization goal(s) and shall meet the goal(s) or demonstrate that it could not meet them despite its best efforts. Failure to provide commitments to meet the established goal(s) for the contract or failure to meet the good faith efforts may be grounds for rejection of the bid as non-responsive.

2. Zero Percent Goal(s). When a zero goal(s) for participation by DBEs has been established, and the Bidder proposes the use of a Subcontractor, the purchase of materials, the use of a Service or the use of Trucking at any time during the life of the contract, the Contractor shall promote the objectives outlined in this subsection by

providing opportunities for DBEs to participate in these areas, with such participation to be credited towards the race-neutral component of the DBE Program.

C. DBE Eligibility. Only those DBE firms that are certified under the New York State Unified Certification Program are eligible to be used for goal attainment. DBE certification is not an endorsement of the quality or performance of the business but simply an acknowledgment of the firm's status as a DBE. A business directory is available on the NYS Unified Certification Program website at http://biznet.nysucp.net.

D. Counting DBE Participation Towards the DBE Goal(s). The value of the work performed by a DBE, including that of a DBE prime contractor, with its own equipment, with its own forces, and under its own supervision will be counted toward the goal(s), provided the utilization is a commercially useful function. A DBE prime contractor shall still provide opportunities for participation by other DBEs. Work performed by DBEs on the contract will be counted as set forth below. If the Department determines that some or all of a DBE's work does not constitute a commercially useful function, only the portion of the work considered to be a commercially useful function will be credited toward the goal(s).

1. Subcontractors. 100% of the value of the work performed by a DBE Subcontractor will be counted toward the DBE goal(s), including the cost of materials and supplies purchased by the DBE, except the cost of supplies or equipment rented or leased from the Contractor or its affiliates will not be counted.

2. Manufacturers/Fabricators. 100% of the expenditure to a DBE Manufacturer or Fabricator will be counted toward the DBE goal(s). Manufacturers or Fabricators may provide materials to the Contractor, a Subcontractor, or other firm working on the contract for installation.

3. Material Suppliers. 60% of the expenditure to a DBE Material Supplier will be counted toward the DBE goal. Packagers, brokers, manufacturer's representatives, or other persons who arrange or expedite transactions are not Material Suppliers. Material Suppliers may provide materials to the Contractor, a Subcontractor, or other firm working on the contract for installation.

4. Brokers/Manufacturer's Representatives. 100% of the expenditures for fees or commissions charged for assistance in the procurement of, or fees for transportation charges for the delivery of, materials or supplies provided by a DBE Broker/Manufacturer's Representative will be counted toward the DBE goal(s), provided they are determined to be reasonable and not excessive as compared with fees customarily allowed for similar services. The cost of the materials and supplies themselves will not be counted. Brokers may supply materials to the Contractor, Subcontractor, or other firm working on the contract.

5. Services. 100% of the expenditure for fees charged by a DBE for providing a bona fide service, such as professional, technical, consultant, or managerial services, or for providing bonds or insurance specifically required for the performance of the contract will be counted toward the DBE goal(s), provided the fee is reasonable and not excessive as compared with fees customarily allowed for similar services.

6. Trucking Operations. A DBE trucking firm shall own and operate at least one registered, insured, and fully operational truck used on the contract and shall be

responsible for the management and supervision of the trucking operation for which it is responsible. The DBE trucking firm shall control the day-to-day DBE trucking operations, and shall be responsible for: (1) Negotiating and executing rental/leasing agreements; (2) Controlling the work force; (3) Coordinating the daily trucking needs with the Contractor or Subcontractor; and (4) Scheduling and dispatching trucks.

a. DBE Owned/Leased Trucks. 100% of the value of the trucking operations the DBE provides on the contract using trucks it owns or leases on a long-term basis that are registered, insured, and operated by the DBE using drivers it employs, will be counted toward the DBE goal. A lease shall indicate that the DBE has exclusive use of and control over the truck. This does not preclude the leased truck from working for others during the term of the lease with the consent of the DBE, so long as the lease gives the DBE absolute priority for use of the leased truck. Leased trucks shall display the name and identification number of the DBE.

b. Other DBE Trucks. The DBE may obtain trucks from another DBE, including an owner/operator. 100% of the value of the trucking operations that the other DBE provides will also be counted toward the DBE goal.

c. Non-DBE Trucks. The DBE may obtain trucks from a non-DBE, including an owner-operator. Only the value of the fee or commission that the DBE receives as a result of the arrangement with the non-DBE will be counted toward the DBE goal.

7. Equipment Rental. 100% of the expenditure to a DBE for equipment rental will be counted toward the DBE goal. The Contractor shall have a written rental agreement with the firm that rents the equipment.

E. Conditions of Participation. DBE participation will be counted toward meeting the DBE contract goal(s), subject to the following conditions:

1. Commercially Useful Function. A DBE is considered to perform a commercially useful function when it is responsible for the execution of a distinct element of work on a contract and carries out its responsibilities by actually performing, managing, and supervising the work involved in accordance with normal industry practice. The arrangement cannot be contrived solely for the purpose of meeting the DBE goal. Regardless of whether an arrangement between the Contractor and the DBE represent standard industry practice, if the arrangement erodes the ownership, control or independence of the DBE or in any other way does not meet the commercially useful function requirement, the Contractor will receive no credit toward the goal(s) and may be required to backfill the participation. A DBE does not perform a commercially useful function if its role is limited to that of an extra participant in a transaction or contract through which funds are passed in order to obtain the appearance of DBE participation.

A DBE may present evidence to rebut a determination by the Department that the DBE is not performing a commercially useful function. Commercially useful function determinations by the Department are subject to review by the Federal Highway Administration (FHWA) but the determination may not be administratively appealed to USDOT.

2. Work Force. The DBE shall employ a work force, (including administrative and clerical) separate and apart from that employed by the Contractor, other Subcontractors on the contract, or their affiliates. The DBE shall perform or exercise responsibility for at

least 30 percent of the total cost of its contract with its own work force. This does not preclude the employment by the DBE of an individual that has been previously employed by another firm involved in the contract, provided that the individual was independently recruited by the DBE in accordance with customary industry practice. The routine transfer of work crews from another employer to the DBE shall not be allowed.

3. Supervision. All work performed by the DBE must be controlled and supervised by the DBE without duplication of supervisory personnel from the Contractor, other Subcontractors on the contract, or their affiliates. This does not preclude routine communication between the supervisory personnel of the DBE and other supervisors necessary to coordinate the contract work.

4. Materials. DBE Subcontractors shall negotiate price, determine quality and quantity, order and pay for the material(s) required to perform the work.

5. Equipment. DBE Subcontractors may supplement their equipment by renting or leasing additional equipment in accordance with customary industry practice. The DBE shall obtain approval of the Department prior to renting equipment from the Contractor or its affiliates, and shall provide documentation demonstrating that similar equipment and terms could not be obtained at a lower cost from other customary sources of equipment. The required documentation shall include, but not be limited to, copies of the rental or leasing agreements, and the names, addresses, and terms quoted by other sources of equipment.

F. Requests For Waiver. A potential bidder, defined as one who has purchased the contract documents, may request a waiver of all or part of a contract's DBE goal(s) by submitting a written request to the Department. The request shall be submitted no later than 17 calendar days prior to the bid opening, in order to allow sufficient time for a review and issuance of an amendment of the established goal(s), if necessary, in accordance with the schedule for contract amendments. The request should contain sufficient justification as to why the goal(s) should be waived or reduced, and should at least address the following factors: the potential Bidder's method of accomplishing the work, the subcontracting opportunities associated with the proposed method, and the availability of certified DBEs for the work to be subcontracted.

G. Good Faith Efforts. To determine whether a bidder that has failed to meet the DBE contract goal(s) may receive the contract, the Department will decide whether the efforts the Bidder made to obtain DBE participation were "good faith efforts" to meet the goal(s). Efforts to obtain DBE participation that are merely pro forma are not good faith efforts, nor are efforts that, even if they are sincerely motivated, given all relevant circumstances, they could not reasonably be expected to produce a level of DBE participation sufficient to meet the goal(s).

In order to award a contract to a bidder that has failed to meet the DBE contract goal(s), the Department will determine that the Bidder's good faith efforts were those that, given all relevant circumstances, a bidder actively and aggressively seeking to meet the goal(s) would make.

When a contract is awarded with DBE commitment(s) that is less than the contract goal(s), the Contractor shall continue good faith efforts. The Contractor shall periodically review items that are available for DBE participation, typically before the beginning of a new construction season and when significant new items of work are added to the contract, and conduct additional DBE solicitation.

In order to evaluate the Bidder's good faith efforts, the Department will consider the quality, quantity, and intensity of the different kinds of efforts that the Bidder has made. Below is a list of the types of actions which the Department will consider as part of the Bidder's good faith efforts to obtain DBE participation. It is not a mandatory checklist, nor is it intended to be exhaustive or exclusive.

1. Securing participation by certified DBE firms for work that they are listed to perform that is in the contract. Only DBEs certified by the NYS Unified Certification Program (NYSUCP) shall be used to fulfill the established goal on Federal-Aid contracts.

2. Soliciting through reasonable and available means the interest of certified DBEs who have the capability to perform the work of the contract. The Bidder shall solicit this interest within sufficient time to allow the DBEs to respond to the solicitation. The Bidder shall verify that DBEs received the solicitation by following up the initial solicitation with at least one additional solicitation via a different media. The Bidder shall keep records of efforts to solicit and negotiate with DBEs as evidence of good-faith efforts, using the *Solicitation Log* as a continuing record.

3. Soliciting, at a minimum, certified DBEs in the appropriate geographic area:

- For all work, soliciting certified DBEs within 75 miles of the contract location.
- For trucking operations and equipment rental, soliciting certified DBEs within 75 miles of the contract location.
- For work such as guide rail, fencing, landscaping, work zone traffic control, survey, signs, permanent highway lighting, traffic signals, and intelligent transportation systems (ITS); soliciting certified DBEs within 150 miles of the contract location.
- For work such as pavement markings, manufacturers, fabricators, material suppliers, brokers, and services; soliciting certified DBEs within 300 miles of the contract location, or on an upstate or downstate basis.

4. Selecting portions of the work to be performed by DBEs in order to increase the likelihood that the DBE goal(s) will be achieved. This includes, where appropriate, either breaking down operations or combining like or related operations into logistically and economically feasible units to facilitate DBE participation, even when the Contractor might prefer to perform these work items with its own forces.

5. Providing interested DBEs with adequate information on where and how to obtain the plans, specifications, and requirements of the contract in a timely manner to assist them in responding to a solicitation.

6. *a. Negotiating in good faith with interested DBEs.* It is the Bidder's responsibility to make a portion of the work available to DBE Subcontractors and material suppliers and to select those portions of the work or material needs consistent with the available DBE Subcontractors and material suppliers, so as to facilitate DBE participation. Evidence of such negotiation includes the names, addresses, and telephone numbers of DBEs that were considered; a description of the information provided regarding the plans and specifications for the work selected for subcontracting; and evidence as to why additional agreements could not be reached for DBEs to perform the work.

b. Additional Costs. The fact that there may be some additional costs involved in finding and using DBEs is not in itself sufficient reason for a bidder's failure to meet the contract DBE goal(s), as long as such costs are reasonable. The ability or desire of a bidder to perform the work of a contract with its own organization does not relieve the Bidder of the responsibility to make good faith efforts. Bidders are not, however, required to accept higher quotes from DBEs if the price difference is excessive or unreasonable.

7. Not rejecting DBEs as unqualified without sound reasons based on a thorough investigation of their capabilities.

8. Making efforts to assist interested DBEs in obtaining bonding, lines of credit or insurance.

9. Making efforts to assist interested DBEs in obtaining necessary equipment, supplies, materials, or related assistance.

10. Where available, effectively using the services of available minority/women focused media, trade associations, and contractor groups; local, state, and Federal minority/women business assistance offices; and other organizations as allowed on a case-by-case basis to provide assistance in the recruitment and placement of DBEs.

H. DBE Pre-Award Utilization Package. Together with its bid, each bidder shall submit a completed DBE Schedule of Utilization, as outlined below.

Low Bidders that do not have access to the approved civil rights reporting software shall contact the Department for guidance on submission of the Utilization Package. As soon as practicable, but not later than prior to the first contract payment, the Contractor shall enter all current utilization data into the approved civil rights reporting software.

For each DBE Subcontractor, the Low Bidder shall indicate the contract pay item number(s) of the work to be performed. The Low Bidder shall explain, in writing, the scope of work to be performed by the DBE for any item which is not completely performed by the DBE Subcontractor. This does not include items for which the Contractor is performing less than the total contract quantity for that item.

For each DBE Manufacturer, Fabricator, Material Supplier, or Broker, the Low Bidder shall indicate the contract pay item number(s) of the material to be manufactured, fabricated, supplied, or otherwise provided. If the material, equipment or service does not correspond to a specific contract pay item, the Low Bidder shall use a contract pay item(s) to which the activity relates.

For each DBE Service, the Low Bidder shall indicate the contract pay item number(s) of the service to be provided. If the equipment or service does not correspond to a specific contract pay item, the Low Bidder shall use a contract pay item(s) to which the activity relates.

For each DBE Trucking Operation, the Low Bidder shall indicate the contract pay item number(s) for which the trucking operations are to be performed. If the trucking operation does not correspond to a specific contract pay item, the Low Bidder shall use a contract pay item(s) to which the activity relates. The Low Bidder shall indicate the type of trucking operation to be performed, the number of trucks owned/leased, the number of trucks working on-site or off-site, rate per hour/ton/load/etc., duration or amount, and total dollar value of the proposed DBE commitment. The Low Bidder shall provide copies of all lease agreements utilized by the DBE.

If the Low Bidder has met or exceeded the established DBE goal(s) for the contract utilizing certified DBEs it is not necessary to submit documentation of good faith efforts.

If the Low Bidder has not met the DBE goal(s), it shall submit the *Solicitation Log*, together with other documentation that substantiates good faith efforts. Such documentation shall include, at a minimum, all envelopes of solicitation inquires that were returned as undeliverable and quotations submitted by DBEs that are not included in the *DBE Schedule of Utilization* with an explanation for the Bidder's action in each case.

After contract award, the Contractor shall promptly execute subcontracts, agreements, or purchase orders, as appropriate, with each DBE for the type and amount of work identified in the approved *DBE Utilization Worksheet*.

I. Bidder's Failure to Comply With DBE Program Requirements. The Department's acceptance of the Low Bidder's bid is conditioned upon the Low Bidder's fulfillment of the DBE utilization requirements. If the Low Bidder fails to submit a complete DBE utilization package with its bid and/or fails to attain the DBE utilization goal(s) and to satisfactorily document its good faith efforts, the bid may be declared incomplete and the deposit may be subject to forfeiture pursuant to Section 27 of the Information for Bidders. The Low Bidder, upon receipt of written notification of its failure to comply with the DBE utilization requirements shall have 5 work days to carry out the corrective action(s) described in the notification.

If the Department determines that the Low Bidder has failed to meet the good faith effort requirements, the Department will, before awarding the contract, provide the Low Bidder an opportunity for administrative reconsideration by an official who did not take part in the original determination that the Low Bidder failed to meet the goal(s) or make adequate good faith efforts to do so. As part of this reconsideration, the Low Bidder shall have the opportunity to provide written documentation or argument and to meet in person with the Department's reconsideration official concerning the issue of whether it met the goal(s) or made adequate good faith efforts to do so. The Department will send the Low Bidder a written decision on reconsideration, explaining the basis for finding that the Low Bidder did or did not meet the goal(s) or make adequate good faith efforts to do so.

(NO TEXT THIS PAGE)

"BUY AMERICA" REQUIREMENTS & WAIVERS

GENERAL BUY AMERICA BID REQUIREMENTS AND DEFINITION. In accordance with New York State Department of Transportation Official Order No. 1511 establishing consistency for application of Section 146 of the State Finance Law, and Section 165 of the
U. S. Surface Transportation Act of 1982, as amended, the Bidder must submit a bid based on permanently incorporating only domestic steel and/or iron in the construction of this contract.
The Bidder may also submit a bid based upon being allowed to permanently incorporate foreign steel and/or iron into the work of the contract. If the Bidder chooses to submit such a bid, the Bidder should purchase an additional proposal for this contract and legibly print the following in ink on the proposal cover and at the bottom of the proposal sheet which contains the phrase "Total gross sum written in words": TOTAL BID BASED UPON USING FOREIGN STEEL AND/OR IRON.
When bids are submitted based upon domestic and foreign steel and/or iron, both bids are to be submitted in the same envelope.
To qualify as domestic, all manufacturing processes (including the fabrication of any product containing steel and/or iron) must have been performed in the United States. To further define the coverage, a domestic product is a manufactured steel and/or iron construction material that was produced in one of the 50 States, the District of Columbia, Puerto Rico, or in the territories and possessions of the United States. Raw material used in the steel and/or iron may be imported. All manufacturing processes to produce steel and/or iron products must occur domestically. Raw materials are materials such as iron ore, limestone, waste products, etc., which are used in the manufacturing process to produce the steel and/or iron products. Waste products would include scrap; i.e., steel and/or iron no longer useful in its present form from old automobiles, machinery, pipe, railroad tracks, and the like. Also, steel and/or iron trimmings from mills or product manufacturing are considered waste. Extracting, crushing, and handling the raw material which is customary to prepare them for transporting are exempt from Buy America.

AWARD OF CONTRACT. Award of this contract will be made to the lowest bidder who submits the lowest total bid based upon furnishing domestic steel and/or iron unless such total bid exceeds the lowest total bid based upon furnishing foreign steel and/or iron by more than 25 percent, in which case award will be made to the lowest responsible bidder based upon furnishing foreign steel and/or iron.

CONTROL OF MATERIALS. All items, regardless or origin, shall comply with their individual specification requirements. In the event the contract is awarded based upon using only domestic steel and/or iron, the Contractor must supply only domestic steel and/or iron and will be paid the domestic steel and/or iron bid prices. The Contractor will be responsible for ensuring that the domestic steel and/or iron is supplied in conformance with the above referenced laws. Such responsibility extends to informing all affected subcontractors and material suppliers of these specific requirements and ascertaining that steel and/or iron being supplied is in conformance with the standard specifications.
In the event that the contract is awarded based upon being allowed to permanently incorporate foreign steel and/or iron in the work, the Contractor may supply either domestic or foreign steel and/or iron and will be paid the foreign steel and/or iron bid prices. If the contract is awarded based upon the domestic steel and/or iron bid, the Contractor may permanently incorporate in the construction of this contract a minimal amount of foreign steel and/or iron if the combined cost of such materials does not exceed one-tenth of one percent
(0.1 percent) of the total contract cost or $2,500.00, whichever is greater. The combined cost of foreign steel and/or iron will be that shown to be the value of the steel and/or iron products as

they are delivered to the project.

BUY AMERICA WAIVERS. In addition to the award of a bid based on foreign steel and/or iron materials, waivers to the Buy America requirement may be requested by the State to the Division Federal Highway Administration if it can be demonstrated that the use of domestic steel and/or iron materials would be inconsistent with the public interest, such materials and products are not produced in the United States in sufficient and reasonably available quantities and of satisfactory quality provided one or more of the above requirements are met, the Contractor may submit a request for a waiver to the Engineer. The request shall include copies of all documentation verifying the unavailability of the material or product, and/or justification of the application for a waiver. For Federally Aided contracts, final approval of the Buy America Waiver request will be made by the Division Federal Highway Administration and concurred with by the Director, Construction Division. For non-Federally Aided contracts, upon final approval of the affected Department program areas, notification and approval of the Buy America Waiver request will be made by the Director, Construction Division.

Note: The following is a list of materials or products which have been granted waivers or exclusions from the "BUY AMERICA" provisions:

1. Hollow 'I'-shaped steel extrusions

CERTIFICATIONS AND TRACKING OF FOREIGN STEEL/IRON. In order to ensure compliance with this contract requirement, all manufacture's certifications for steel and/or iron and items including steel and/or iron must contain a statement of domestic origin, and material suppliers must certify that what they provide is the same material certified by the manufacturer. If the material or product certification does not properly identify conformance to the specification the product will be rejected and must be removed from the project site. If however the manufacturer and/or material supplier requests to leave the product in place and provide a revised certification only, the revised certification must be accompanied with a letter of explanation to the satisfaction of the Resident Engineer. The explanation shall indicate the basis for using the revised certification rather than the original supplied. The letter shall also include corrective action to assure that future certifications will be representative of the material or product supplied. The letter must be signed by a company representative that can legally bind the firm.

If the Contractor proposes to use foreign steel/iron in small amounts under the threshold, the amount allowed will be based on the material price to the Contractor, as verified by invoice and approved by the Resident Engineer. The amount is cumulative for the entire contract, so subsequent requests will have to be added to any previous requests before comparison to the allowable threshold.

The "Buy America" contract specification does not apply to iron or steel that is to be used for temporary means which will be removed during or at the end of the project.

DEFINITIONS:

Steel - Steel material of any type, including welding rod.

Iron - Iron material of any type, including cast and ductile iron, but not pig iron.

Domestic - The 50 States, the District of Columbia, Puerto Rico and territories/possessions of the US.

Foreign - Any location other than those defined as Domestic.

Manufacturing Processes - Steel and/or iron manufacturing processes must be domestic; e.g. manufacture, fabrication, grinding, drilling, welding, finishing and coating of steel. Ore, scrap, and pig iron may be foreign or domestic; however, transformation into steel and/or iron and all subsequent processes and fabrication must be domestic. The fabrication of composite items using domestic steel (e.g. casting reinforced concrete box culvert using reinforcing cut and bent to final shapes) is not considered a manufacturing process, and the composite item is acceptable.

Fabricated Product Containing Steel and/or Iron - Items, products or materials containing any amount of steel and/or iron materials; e.g., a metal pipe may be steel or iron, a reinforced concrete pipe contains steel, a prestressed beam contains steel, iron castings are iron, a steel beam is steel and steel laminated bridge bearings contain steel.

(NO TEXT ON THIS PAGE)

EQUAL EMPLOYMENT OPPORTUNITY REQUIREMENTS.

The Department seeks to ensure nondiscrimination in employment under all Department contracts. The Contractor shall comply with the following Equal Employment Opportunity (EEO) requirements. *Goals for Equal Opportunity Employment Participation* are listed in the required contract provisions section of the contract proposal. The covered area is the county or counties in which the work is located.

For Federal-Aid contracts, Equal Employment Opportunity provisions are also found in Attachment A - *Required Contract Provisions Federal-Aid Construction Contracts – FHWA 1273.*

Nothing herein provided shall be construed as a limitation upon the application of other laws which establish different standards of compliance or upon the application of requirements for the hiring of local or other area residents (e.g., those under the Public Works Employment Act of 1977 and the Community Development Block Grant Program).

A. Statutory Authority. The Federal statutory authority for Equal Employment Opportunity provisions is contained in 23 U.S.C. 140(a), and Executive Order 11246. State statutory authority is contained in Section 85 of the Highway Law, Section 428 of the Transportation Law, and NYS Executive Law Articles 15 and 15-A, Regulations have been promulgated under 23 CFR 230, 41 CFR 60, 49 CFR 21, and 5 NYCRR 140-145.

B. Definitions.

For Federal-Aid contracts, a minority group member is defined under this subsection as someone who is, and can demonstrate membership in, one of the following groups:

a. Black (all persons having origins in any of the Black African racial groups not of Hispanic origin);
b. Hispanic (all persons of Mexican, Puerto Rican, Cuban, Central or South American or other Spanish Culture or origin, regardless of race);
c. Asian and Pacific Islander (all persons having origins in any of the original peoples of the Far East, Southeast Asia, the Indian Subcontinent, or the Pacific Islands); and
d. American Indian or Alaskan Native (all persons having origins in any of the original peoples of North America and maintaining identifiable tribal affiliations through membership and participation or community identification).

C. Employment Goals. An employment goal(s) for minorities and a separate goal for women are presented in the contract documents. The Contractor shall provide equal employment opportunity and shall take affirmative action for all minority groups, both male and female; and women, both minority and non-minority. If the Contractor performs work outside of the covered area, it shall apply the goals established for the county where the work is actually performed. The Department will monitor the Contractor's attainments towards EEO goals in accordance with Attachment H - *Civil Rights Monitoring and Reporting.*

The goals set for the contract are expressed as percentages of the total hours of employment and training of minority and female utilization the Contractor should reasonably be able to achieve in each construction trade in which it has employees in the covered area. The Contractor is expected to make substantially uniform progress in meeting its goals in each trade. The hours of minority and female employment and training shall be substantially uniform

throughout the length of the contract, and in each trade, and the Contractor shall make a good faith effort to employ minorities and women evenly on each of its contracts. The transfer of minority or female employees, apprentices, or trainees from contractor to contractor or from contract to contract for the sole purpose of meeting the Contractor's goals is a violation of the contract.

D. Contractor Obligations. The Contractor shall comply with all provisions of Federal Executive Order 11246 and the provisions of State and Federal laws and regulations. The Contractor shall furnish all information and reports required by Executive Order 11246 and by rules, regulations, and orders of the Secretary of Labor, or pursuant thereto, and will permit access to its books, records, and accounts by the Department and the U.S. Secretary of Labor for purposes of investigation to ascertain compliance with such rules, regulations, and orders. The Contractor shall develop and implement an EEO policy in accordance with Attachment A, *Required Contract Provisions Federal-Aid Construction Contracts – FHWA 1273* and in accordance with Attachment B, *Standard Clauses for All New York State Contracts*.

1. Non-Discrimination. The Contractor shall not discriminate against any employee or applicant for employment because of race, color, religion, sex, national origin, age, disability or marital status. The Contractor shall take affirmative action to ensure that applicants are employed, and that employees are treated during employment, without regard to their age, race, creed, color, national origin, sexual orientation, military status, sex, disability, predisposing genetic characteristics, marital status, or domestic violence victim status and shall also follow the requirements of the Human Rights Law with regard to non-discrimination on the basis of prior criminal conviction and prior arrest. Such actions shall include, but not be limited to the following: employment, upgrading, demotion, or transfer; recruitment or recruitment advertising; layoff or termination; rates of pay or other forms of compensation; and selection for training, including apprenticeship. The Contractor shall post in conspicuous places, available to employees and applicants for employment, notices to be provided by the Department setting forth the provisions of this non-discrimination clause.

The Contractor shall state in all solicitations or advertisements for employees that, in the performance of the contract, all qualified applicants will be afforded equal employment opportunities without discrimination because of age, race, creed, color, national origin, sexual orientation, military status, sex, disability, predisposing genetic characteristics, marital status, or domestic violence victim status.

The Contractor shall not use the goals or affirmative action requirements to discriminate against any person because of age, race, creed, color, national origin, sexual orientation, military status, sex, disability, predisposing genetic characteristics, marital status, or domestic violence victim status.

2. Solicitations. The Contractor shall state in all solicitations or advertisements for employees placed by or on behalf of the Contractor, that all qualified applicants will receive consideration for employment without regard to race, color, religion, sex, national origin, age, disability or marital status.

3. Collective Bargaining Agreements. The contractor shall send to each labor union or representative of workers with which it has a collective bargaining agreement or other contract or understanding, a notice to be provided advising the said labor union or workers' representatives of the contractor's commitments to equal employment opportunities, and

shall post copies of the notice in conspicuous places available to employees and applicants for employment.

The Contractor shall request each employment agency, labor union, or authorized representative of workers with which it has a collective bargaining or other agreement or understanding, to furnish a written statement that such employment agency, labor union, or representative will not discriminate on the basis of race, creed, color, national origin, sex age, disability or marital status and that such union or representative will affirmatively cooperate in the implementation of the Contractor's obligations herein.

Neither the provisions of any collective bargaining agreement, nor the failure by a union with whom the Contractor has a collective bargaining agreement, to refer either minorities or women shall excuse the Contractor's obligations.

4. Complaints of Alleged Discrimination. The Contractor shall promptly investigate all complaints of alleged discrimination made to the Contractor in connection with its obligations under this contract, shall attempt to resolve such complaints, and shall take appropriate corrective action within a reasonable time. If the investigation indicates that the discrimination may affect persons other than the complainant, corrective action shall include such other persons. Upon completion of each investigation, the Contractor shall inform every complainant of all available avenues of appeal.

5. Non-Compliance. In the event of the contractor's non-compliance with the nondiscrimination clauses of this contract or with any of such rules, regulations, or orders, this contract may be canceled, terminated or suspended in whole or in part and the contractor may be declared ineligible for further contracts in accordance with procedures authorized in Executive Order 11246, and such other sanctions may be imposed and remedies invoked as provided in Executive Order 11246, or by rule, regulation, or order of the U.S. Secretary of Labor, or as otherwise provided by law.

6. Subcontracts/Purchase Orders. The Contractor shall include the provisions of Subsection D, *Contractor Obligations,* of this Attachment F, in every subcontract or purchase order, so that such provisions will be binding upon each subcontractor or vendor. In the event a Contractor becomes involved in, or is threatened with, litigation with a subcontractor or vendor as a result of such direction by the Department, the Contractor may request the United States to enter into such litigation to protect the interests of the United States.

E. Affirmative Action Steps. The Contractor shall take specific affirmative actions to promote equal employment opportunity. The evaluation of the Contractor's compliance with these specifications shall be based upon its effort to achieve maximum results from its actions. The Contractor shall document these efforts fully, and shall implement affirmative action steps at least as extensive as the following:

1. Ensure and maintain a working environment free of harassment, intimidation, and coercion at all sites, and in all facilities at which the Contractor's employees are assigned to work. The Contractor, where possible, shall assign two or more women to each construction contract. The Contractor shall specifically ensure that all forepersons, superintendents, and other onsite supervisory personnel are aware of and carry out the Contractor's obligation to maintain such a working environment, with specific attention to minority or female individuals working at such sites or in such facilities.

2. Establish and maintain a current list of minority and female recruitment sources, provide written notification to minority and female recruitment sources and to community organizations when the Contractor or its unions have employment opportunities available, and maintain a record of the organizations' responses.

3. Maintain a current file of the names, addresses and telephone numbers of each minority and female off-the-street applicant and minority or female referral from a union, a recruitment source or community organization and of what action was taken with respect to each such individual. If such individual was sent to the union hiring hall for referral and was not referred back to the Contractor by the union or, if referred, not employed by the Contractor, this shall be documented in the file with the reason therefore, along with whatever additional actions the Contractor may have taken.

4. Provide immediate written notification to the Department when the union or unions with which the Contractor has a collective bargaining agreement has not referred to the Contractor a minority person or woman sent by the Contractor, or when the Contractor has other information that the union referral process has impeded the Contractor's efforts to meet its obligations.

5. Develop on-the-job training opportunities and/or participate in training programs for the area which expressly include minorities and women, including upgrading programs and apprenticeship and trainee programs relevant to the Contractor's employment needs, especially those programs funded or approved by either the NYS Department of Labor or the US Department of Labor. The Contractor shall provide notice of these programs to the sources compiled under E.2. above.

6. Disseminate the Contractor's EEO policy by providing notice of the policy to unions and training programs and requesting their cooperation in assisting the Contractor in meeting its EEO obligations; by including it in any policy manual and collective bargaining agreement; by publicizing it in the company newspaper, annual report, etc.; by specific review of the policy with all management personnel and with all employees at least once a year; and by posting the company EEO policy on bulletin boards accessible to all employees at each location where construction work is performed.

7. Review, at least annually, the company's EEO policy and affirmative action obligations under these specifications with all employees having any responsibility for hiring, assignment, layoff, termination or other employment decisions including specific review of these items with onsite supervisory personnel such as superintendents, forepersons, etc., prior to the initiation of construction work at any contract site. A written record shall be made and maintained identifying the time and place of these meetings, persons attending, subject matter discussed, and disposition of the subject matter.

8. Disseminate the Contractor's EEO policy externally by including it in any advertising in the news media, specifically including minority and female news media, and providing written notification to and discussing the Contractor's EEO policy with other contractors and Subcontractors with whom the Contractor does or anticipates doing business.

9. Direct its recruitment efforts, both oral and written, to minority, female and community organizations, to schools with minority and female students and to minority and female recruitment and training organizations serving the Contractor's recruitment area and employment needs. Not later than one month prior to the date for the acceptance of

applications for apprenticeship or other training by any recruitment source, the Contractor shall send written notification to organizations such as the above, describing the openings, screening procedures, and tests to be used in the selection process.

10. Encourage present minority and female employees to recruit other minority persons and women and, where reasonable, provide after school, summer and vacation employment to minority and female youth both on the site and in other areas of the Contractor's work force.

11. Validate all tests and other selection requirements in accordance with state and Federal laws, rules and regulations.

12. Conduct, at least annually, an inventory and evaluation of all minority and female personnel for promotional opportunities. Encourage these employees to seek or to prepare for promotional opportunities through appropriate training, etc.

13. Ensure that seniority practices, labor classifications, work assignments and other personnel practices, do not have a discriminatory effect by continually monitoring all personnel and employment related activities to ensure that the EEO policy and the Contractor's obligations under these specifications are being carried out.

14. Ensure that all facilities and company activities are non-segregated except that separate or single-user toilet and necessary changing facilities shall be provided to assure privacy between the sexes.

15. Document and maintain a record of all solicitations of offers for Subcontracts from minority and female construction contractors and suppliers, including circulation of solicitations to minority and female contractor associations and other business associations.

16. Conduct a review, at least annually, of all supervisors' adherence to and performance under the Contractor's EEO policies and affirmative action obligations.

F. Associations. Contractors are encouraged to participate in voluntary associations which assist in fulfilling one or more of their affirmative action obligations. The efforts of a contractor association, joint contractor-union, contractor-community, or other similar group of which the Contractor is a member and participant, may be asserted as fulfilling one or more of its obligations, provided that the Contractor actively participates in the group, makes every effort to ensure that the group has a positive impact on the employment of minorities and women in the industry, ensures that the benefits of the program are reflected in the Contractor's minority and female workforce participation, makes a good faith effort to meet its individual goals and timetables, and can provide access to documentation which demonstrates the effectiveness of actions taken on behalf of the Contractor. The obligation to comply, however, is the Contractor's and failure of such a group to fulfill an obligation shall not be a defense for the Contractor's noncompliance.

G. Hometown Plans (Federal-Aid Contracts Only). If a Contractor is participating (pursuant to 41 CFR 60-4.5) in a Hometown Plan approved by the USDOL in the covered area either individually or through an association, its affirmative action obligations on all work in the Plan area (including goals and timetables) shall be in accordance with that Plan for those trades which have unions participating in the Plan. Contractors participating in Hometown Plans shall be able to demonstrate their participation and document their compliance with the provision of the Hometown Plan. Each Contractor participating in an approved plan is individually required to

comply with its obligation under the EEO clause and to make a good faith effort to achieve each goal under the plan in each trade in which it has employees. The overall good faith performance by other Contractors toward a goal in an approved plan does not excuse any covered Contractor's failure to take good faith efforts to achieve the Plan goals and timetables.

GOALS FOR EQUAL EMPLOYMENT OPPORTUNITY (EEO) PARTICIPATION

GOALS FOR MINORITY PARTICIPATION

COUNTY	%
Albany	3.2
Allegany	6.3
Broome	1.1
* Bronx	
Cattaraugus	6.3
Cayuga	2.5
Chautauqua	6.3
Chemung	2.2
Chenango	1.2
Clinton	2.6
Columbia	2.6
Cortland	2.5
Delaware	1.2
Dutchess	6.4
Erie	7.7
Essex	2.6
Franklin	2.5
Fulton	2.6
Genesee	5.9
Greene	2.6
Hamilton	2.6

COUNTY	%
Herkimer	2.1
Jefferson	2.5
* Kings	
Lewis	2.5
Livingston	5.3
Madison	3.8
Monroe	5.3
Montgomery	3.2
Nassau	5.8
* New York	
Niagara	7.7
Oneida	2.1
Onondaga	3.8
Ontario	5.3
Orange	17.0
Orleans	5.3
Oswego	3.8
Otsego	1.2
Putnam	22.6
* Queens	
Rensselaer	3.2

COUNTY	%
* Richmond	
Rockland	22.6
St. Lawrence	2.5
Saratoga	3.2
Schenectady	3.2
Schoharie	2.6
Schuyler	1.2
Seneca	5.9
Steuben	1.2
Suffolk	5.8
Sullivan	17.0
Tioga	1.1
Tompkins	1.2
Ulster	17.0
Warren	2.6
Washington	2.6
Wayne	5.3
Westchester	22.6
Wyoming	6.3
Yates	5.9

* The following goal ranges are applicable to the indicated trades in the Counties of Bronx, Kings, New York, Queens and Richmond:

Electricians	9.0 to 10.2
Carpenters	27.6 to 32.0
Steam fitters	12.2 to 13.5
Metal lathers	24.6 to 25.6
Painters	26.0 to 28.6
Operating engineers	25.6 to 26.0
Plumbers	12.0 to 14.5
Iron Workers (structural)	25.9 to 32.0
Elevator constructors	5.5 to 6.5
Bricklayers	13.4 to 15.5
Asbestos workers	22.8 to 28.0
Roofers	6.3 to 7.5
Iron Workers (ornamental)	22.4 to 23.0
Cement masons	23.0 to 27.0
Glaziers	16.0 to 20.0
Plasterers	15.8 to 18.0
Teamsters	22.0 to 22.5
Boilermakers	13.0 to 15.5
All others	16.4 to 17.5

GOAL FOR PARTICIPATION OF WOMEN

The last publication of a goal for the participation of women was April 7, 1978 (43 FR 14888, 14900). Pursuant to 41CFR 60-4.6, the 6.9% goal published on that date is hereby made the goal for all contracts and grant agreements, until further notice.

STANDARDIZED CHANGED CONDITIONS CLAUSES

FHWA CHANGED CONDITION CLAUSES (23CFR635.109)

(1) *Differing site conditions.*

(i) During the progress of the work, if subsurface or latent physical conditions are encountered at the site differing materially from those indicated in the contract or if unknown physical conditions of an unusual nature, differing materially from those ordinarily encountered and generally recognized as inherent in the work provided for in the contract, are encountered at the site, the party discovering such conditions shall promptly notify the other party in writing of the specific differing conditions before the site is disturbed and before the affected work is performed.

(ii) Upon written notification, the engineer will investigate the conditions, and if it is determined that the conditions materially differ and cause an increase or decrease in the cost or time required for the performance of any work under the contract, an adjustment, excluding anticipated profits, will be made and the contract modified in writing accordingly. The engineer will notify the contractor of the determination whether or not an adjustment of the contract is warranted.

(iii) No contract adjustment which results in a benefit to the contractor will be allowed unless the contractor has provided the required written notice.

(iv) No contract adjustment will be allowed under this clause for any effects caused on unchanged work.

(2) *Suspensions of work ordered by the engineer.*

(i) If the performance of all or any portion of the work is suspended or delayed by the engineer in writing for an unreasonable period of time (not originally anticipated, customary, or inherent to the construction industry) and the contractor believes that additional compensation and/or contract time is due as a result of such suspension or delay, the contractor shall submit to the engineer in writing a request for adjustment within 7 calendar days of receipt of the notice to resume work. The request shall set forth the reasons and support for such adjustment.

(ii) Upon receipt, the engineer will evaluate the contractor's request. If the engineer agrees that the cost and/or time required for the performance of the contract has increased as a result of such suspension and the suspension was caused by conditions beyond the control of and not the fault of the contractor, its suppliers, or subcontractors at any approved tier, and not caused by weather, the engineer will make an adjustment (excluding profit) and modify the contract in writing accordingly. The contractor will be notified of the engineer's determination whether or not an adjustment of the contract is warranted.

(iii) No contract adjustment will be allowed unless the contractor has submitted the request for adjustment within the time prescribed.

(iv) No contract adjustment will be allowed under this clause to the extent that performance would have been suspended or delayed by any other cause, or for which an adjustment is provided or excluded under any other term or condition of this contract.

(3) *Significant changes in the character of work.*

(i) The engineer reserves the right to make, in writing, at any time during the work, such changes in quantities and such alterations in the work as are necessary to satisfactorily complete

the project. Such changes in quantities and alterations shall not invalidate the contract nor release the surety, and the contractor agrees to perform the work as altered.

(ii) If the alterations or changes in quantities significantly change the character of the work under the contract, whether such alterations or changes are in themselves significant changes to the character of the work or by affecting other work cause such other work to become significantly different in character, an adjustment, excluding anticipated profit, will be made to the contract. The basis for the adjustment shall be agreed upon prior to the performance of the work. If a basis cannot be agreed upon, then an adjustment will be made either for or against the contractor in such amount as the engineer may determine to be fair and equitable.

(iii) If the alterations or changes in quantities do not significantly change the character of the work to be performed under the contract, the altered work will be paid for as provided elsewhere in the contract.

(iv) The term "significant change" shall be construed to apply only to the following circumstances:

(A) When the character of the work as altered differs materially in kind or nature from that involved or included in the original proposed construction; or

(B) When a major item of work, as defined elsewhere in the contract, is increased in excess of 125 percent or decreased below 75 percent of the original contract quantity. Any allowance for an increase in quantity shall apply only to that portion in excess of 125 percent of original contract item quantity, or in case of a decrease below 75 percent, to the actual amount of work performed.

MAJOR ITEM OF WORKS

The term "major item" of work shall mean any item for which the original bid price multiplied by the original contract quantity exceeds $50,000 or 2% of the total contract bid price, whichever is less.

CIVIL RIGHTS MONITORING AND REPORTING

The approved civil rights reporting software is *Equitable Business Opportunity Solution* (EBO). The EBO software is a web-based system owned and maintained by the New York State Department of Transportation, and provided to the Contractor at no cost. The Contractor shall use the approved civil rights reporting software on all contracts. The Contractor shall submit complete, accurate, electronic data to the Department for each month, not later than the 15th of the following month, using the approved civil rights reporting software. Data shall be current through the end of the last full payroll week for that month, or as otherwise approved by the Engineer to coordinate with contract payment submittals.

A. Civil Rights Officer(s). The Contractor shall designate a Corporate Civil Rights Officer, a Corporate DBE Representative, and a contract site Equal Employment Opportunity (EEO) Representative; and each Subcontractor shall designate a Corporate Civil Rights Officer, and a contract site Equal Employment Opportunity (EEO) Representative in the approved civil rights reporting software. The designated individuals shall have the responsibility to and shall be capable of effectively administering and promoting an active program of equal employment opportunity and who shall be assigned adequate authority and responsibility to do so. A single individual may fulfill multiple roles. The Contractor shall update the approved civil rights reporting software within 10 calendar days of any changes in these roles.

B. Workforce Participation Plan. At the pre-construction meeting, the Contractor shall submit a *Workforce Participation Plan* covering the Contractor's workforce and the workforce of its Subcontractors with subcontracts over $10,000, together and coordinated with the contract progress schedule that addresses the Equal Employment Opportunity goals.

The Contractor shall not start work until the Department and the Contractor have agreed upon has accepted the *Workforce Participation Plan*. The Contractor shall submit a revised plan when a significant work force build-up or reduction will substantially affect goal attainment, or when a revised schedule is requested by the Department. Such revised *Workforce Participation Plan* must be agreed upon by the Department or the original will remain in effect.

C. Equal Employment Opportunity (EEO) Monitoring and Reporting. The Contractor's compliance with the EEO Requirements will be based on its Employment Utilization, affirmative action steps and its good faith efforts to meet the goals.

The Department, in evaluating the Contractor's good faith efforts to meet the EEO goal(s), will first analyze the Contractor's goal attainment on an individual contract. If the Contractor is not meeting the goal(s) for a single trade or contract, the Department will analyze, progressively, the Contractor's goal attainment on all contracts held by the Contractor. This method of analysis shall be applied primarily but not solely to contracts with small population numbers. Other factors to be considered include, but are not limited to; the location of the contracts, the relative proximity of the contracts to each other, and the nature of the work.

1. Employee Utilization Data. The Contractor shall submit employee utilization data for its workforce and for each Subcontractor with a subcontract exceeding $10,000 on a monthly basis showing hours worked for each payroll week, for each trade and classification, by gender and ethnicity. Employee utilization data shall include data from

the start of the contract up to and including the month being reported. For the purpose of determining utilization percentages, the hours of female and minority employment shall be tabulated separately and attainment percentages calculated separately.

2. Federal-Aid Highway Construction Contractors Annual EEO Report. The Contractor shall submit all required employee utilization data to produce a Form FHWA 1391 *Federal-Aid Highway Construction Contractors Annual EEO Report* to the Department annually not later than August 15th, covering the last payroll period worked in July, for all ongoing Federal-Aid contracts. The data shall indicate the number of minority men, minority women, non-minority men, and non-minority women employees currently engaged in each trade.

3. Subcontractor Sanctions. The Contractor shall carry out such sanctions and penalties for violation of Attachment F - Equal Employment Opportunity Requirements, including suspension, termination and cancellation of existing subcontracts as may be imposed or ordered pursuant to Executive Order 11246, and its implementing regulations, by the Office of Federal Contract Compliance Programs. Any Contractor who fails to carry out such sanctions and penalties shall be in violation of these specifications and Executive Order 11246.

4. Contractor Compliance. If the Contractor fails to meet the EEO goal(s) for minorities or women, the Department may require training of minorities and women to satisfy the employment goals. If the Contractor fails to meet the EEO goal(s) or is in noncompliance with the nondiscrimination clauses, the Department may determine that one of the following actions should be taken:

a. ***entering into an agreement with the Contractor allowing the Contractor to cure the violation;***
b. ***revoking the Contractor's pre-qualification to bid or make proposals for future contracts;***
c. ***making a finding that the Contractor is in default of the Contract;***
d. ***terminating the Contract;***
e. ***declaring the Contractor to be in breach of Contract;***
f. ***withholding payment or reimbursement;***
g. ***determining not to renew the Contract;***
h. ***assessing actual and consequential damages;***
i. ***assessing liquidated damages or reducing fees, provided that liquidated damages may be based on amounts representing costs of delays in carrying out the purposes of the EEO Requirements, or in meeting the purposes of the Contract, the costs of meeting utilization goals through additional procurements, the administrative costs of investigation and enforcement, or other factors set forth in the Contract;***
j. ***exercising rights under the Contract to procure goods, services or construction from another contractor and charge the cost of such contract to the Contractor that has been found to be in noncompliance; or***
k. ***taking any other appropriate remedy.***

The Contractor may also be referred to the U.S. Department of Labor, Office of Federal Contract Compliance Programs (OFCCP), which has the sole authority to determine compliance with Executive Order 11246 and its implementing regulations.

OFCCP may declare the Contractor ineligible for further Federal-Aid contracts in accordance with procedures authorized in Executive Order 11246, and such other sanctions may be imposed and remedies invoked as provided in Executive Order 11246, or by rule, regulation, or order of the U.S. Secretary of Labor, or as otherwise provided by law.

D. DBE Monitoring and Reporting. The Engineer will monitor the work to ensure that the identified DBEs perform the work as identified in the Contractor's commitments. Attainments will be measured based on payments made to DBEs. Attainments based on work completed by DBEs that are no longer certified will be counted towards the original contract goal, but will not be counted towards the overall corporate goal.

1. Monitoring Commercially Useful Function (CUF) by DBEs. Each DBE Subcontractor shall provide confirmation to the Engineer that the workforce provided meets the requirements of Attachment D, Subsection E.2, *Work Force*. Each DBE Subcontractor shall provide a copy of invoices for all material incorporated into the work to the Engineer, in order to confirm that the DBE has met the requirements of Attachment D, Subsection E.4, *Materials*. Each DBE Subcontractor shall provide a copy of a rental agreement for all non-owned equipment used to perform the work to the Engineer, in order to confirm that the DBE has met the requirements of Attachment D, Subsection E.5, *Equipment*.

The Contractor shall provide a copy of an invoice for all material provided by a DBE Manufacturer, Fabricator or Material Supplier to the Engineer. The Contractor shall provide a copy of a rental agreement with each DBE Equipment Rental firm to the Engineer. The Contractor shall provide a copy of an invoice that details the work product(s) provided from each DBE Professional Service to the Engineer.

2. Report of Payments to Subcontractors and DBEs. The Contractor shall report payments made to all Subcontractors and all DBEs, in order to measure goal attainment and to gauge the effect of DBE goal(s) on the industry. The Contractor shall submit payment data for all Subcontractors and for all DBEs approved by the Department that are due a payment or have received a payment within the last month. The Subcontractor or DBE shall acknowledge payment not later than 7 calendar days after receipt. The date of receipt is: (1) the date the payment was made by electronic funds transfer to an account identified and agreed to by both parties; (2) the date the envelope containing the payment was date stamped by the US Postal Service; or (3) the date the payment was physically provided to a previously authorized representative of the Subcontractor or DBE, either by the Contractor, or by a delivery service.

The Contractor shall enter the final payment to each Subcontractor or DBE and designate it as such when the final payment is made, or as a separate $0.00 entry indicating final payment has been made, prior to contract final acceptance, excepting those payments due from work contained in a change order that have not been approved. The Subcontractor or DBE shall acknowledge payment not later than 7 calendar days after receipt.

3. Revisions to DBE Utilization. The Contractor shall utilize the DBEs committed to to perform the work or supply materials for which each is listed. The Contractor shall obtain Department approval for substantial revisions in DBE utilization prior to implementing any proposed change through submission of a revised *DBE Utilization Worksheet* using

the approved civil rights reporting software. Unless approval for revision is granted, the Contractor will not be entitled to any payment for work or material committed to a DBE unless it is performed or supplied by the approved DBE.

If the reduction of the DBE's work or the removal of the DBE, including for reasons of commercially useful function violations, causes the DBE utilization to fall below the goal(s), the Contractor shall make good faith efforts to find another DBE to substitute for the original DBE to perform at least the same amount of work as the DBE that was terminated, to the extent needed to meet the contract goal(s).

A DBE may be substituted if the work committed to the DBE is deleted or reduced by the Department and enough work remains to substitute an equal commitment amount to the affected DBE. If not enough work remains, the Department may relieve the Contractor from attaining that portion of the commitments.

The following modifications will be considered a substantial revision in DBE utilization:
1. Adding, removing or substituting a DBE;
2. Adding new item(s) of work to a DBE within a NAICS Code for which the DBE is not currently approved;
3. Significantly reducing the dollar value of or eliminating the DBE's item(s) of work. Significant reduction will be determined by comparison to the total DBE contract goal.

The following modifications will not be considered a substantial revision in DBE utilization:
1. Increasing the dollar value of an item(s) of work or adding new item(s) of work within the same NAICS Code to a DBE;
2. Substituting similar dollar values of work within NAICS Codes that the DBE is currently approved for;
3. Changes in utilization due to differences between estimated quantities and actual work performed.

a. DBE Program. In accordance with 49 CFR 26.53(f)(1), the Contractor shall not terminate a DBE listed on the approved DBE Utilization plan without the prior written consent of the Department. This includes, but is not limited to, instances in which a contractor seeks to perform work originally designated for a DBE subcontractor with its own forces or those of an affiliate, a non-DBE firm, or with another DBE firm.

The Department will consent only if the Contractor has good cause to terminate the DBE firm. Good cause includes, at a minimum, one the following circumstances:

- The listed DBE fails or refuses to execute a written contract;
- The listed DBE fails or refuses to perform the work of its subcontract in a way consistent with normal industry standards. Provided, however, that good cause does not exist if the failure or refusal of the DBE subcontractor to perform its work on the subcontract results from the bad faith or discriminatory action of the Contractor;
- The listed DBE fails or refuses to meet the Contractor's reasonable, nondiscriminatory bond requirements.
- The listed DBE becomes bankrupt, insolvent, or exhibits credit unworthiness;

- The listed DBE is ineligible to work on public works projects because of suspension and debarment proceedings pursuant 2 CFR Parts 180, 215 and 1,200 or applicable state law;
- The Department has determined that the listed DBE is not a responsible contractor;
- The listed DBE voluntarily withdraws from the project and provides to the Department written notice of its withdrawal;
- The listed DBE is ineligible to receive DBE credit for the type of work required;
- A DBE owner dies or becomes disabled with the result that the listed DBE is unable to complete its work on the contract;
- Other documented good cause that you determine compels the termination of the DBE. Provided, that good cause does not exist if the Contractor seeks to terminate a DBE it relied upon to obtain the contract so that the Contractor can self-perform the work for which the DBE was engaged or so that the Contractor can substitute another DBE or non-DBE contractor after contract award.

Before submitting its request to terminate and/or substitute a DBE to the Department, the Contractor shall give notice in writing to the DBE subcontractor, with a copy to the Engineer, of its intent to request to terminate and/or substitute, and the reason for the request.

The Contractor shall give the DBE five days to respond to the notice and advise the Department and the Contractor of the reasons, if any, why the DBE objects to the proposed termination of its subcontract and why the Department should not approve the Contractor's action. If required in a particular case as a matter of public necessity (e.g., safety), the Department may approve a response period shorter than five days.

3. Contractor DBE Program Compliance. If the Contractor fails to meet the DBE utilization goal(s), to exert a good faith effort, or otherwise fails to comply with the DBE requirements, the Department may take further actions, as follows. The Department may determine that one of the following actions should be taken:

a. entering into an agreement with the Contractor allowing the Contractor to cure the violation;
b. revoking the Contractor's pre-qualification to bid or make proposals for future contracts;
c. making a finding that the Contractor is in default of the Contract;
d. terminating the Contract;
e. declaring the Contractor to be in breach of Contract;
f. withholding payment or reimbursement;
g. determining not to renew the Contract;
h. assessing actual and consequential damages;
i. assessing liquidated damages or reducing fees, provided that liquidated damages may be based on amounts representing costs of delays in carrying out the purposes of the DBE program, or in meeting the purposes of the Contract, the costs of meeting utilization goals through additional procurements, the administrative costs of investigation and enforcement, or other factors set forth in the Contract;

j. exercising rights under the Contract to procure goods, services or construction from another contractor and charge the cost of such contract to the Contractor that has been found to be in noncompliance; or
k. taking any other appropriate remedy.

The Contractor may also be referred to the USDOT for possible suspension or debarment as provided in 49 CFR 29 and such other sanctions as may be imposed and remedies invoked as provided under the authority of 49 CFR 26, or by rule, regulation, or order of the Commissioner or as otherwise provided by law.

E. Compliance Reviews. The New York State Department of Transportation and the Department conduct annual civil rights contract compliance reviews of selected Federal-aid contracts in accordance with 23 CFR 230.409. A compliance review consists of a thorough review of all civil rights contract requirements, including Nondiscrimination in Labor/Employment, EEO, Training, and DBE requirements. A Contractor will typically not be selected for more than one compliance review per year statewide. Based on contract monitoring and/or the results of compliance review(s), the New York State Department of Transportation and the Department may conduct a review of some or all ongoing contracts with a single Contractor, regardless of funding source.

False Claims Certification
(31 USC §3729, NYS Finance Law Article 13)

Under the Federal False Claims Act, 31 US Code §3729, any person or entity who knowingly presents, or causes to be presented to the Federal Government, a false or fraudulent claim for payment or approval is liable to the United State Government for a civil penalty of not less than $5,000 and not more than $10,000, plus three times the amount of damages the Government sustains.

Under the New York State False Claims Act, NYS Finance Law Article 13, any person or entity who knowingly presents or causes to be presented to the State of New York or Local Governments within the State of New York, a false or fraudulent claim for payment or approval is liable to the Government for a civil penalty of not less than $6,000 and not more than $12,000, plus three times the amount of damages the Government sustains.

"Knowingly" is defined as: (1) actual knowledge; (2) acting in deliberate ignorance of the truth or falsity of information; or (3) acting in reckless disregard of the truth or falsity of information; no proof of specific intent to defraud is required.

The Contractor to whom the above-identified contract is to be awarded does hereby certify to New York State Department of Transportation that it understands the prohibitions under the Federal and New York State False Claims Acts, and that it has not and will not submit or caused to be submitted any fraudulent claims in the submission of this bid or in connection with the above-identified contract. The Contractor further certifies that it understands retaliatory actions, against employees and officers who initiate a *Qui Tam* (public) action on behalf of the government or cooperate in the investigation of a false claim, are prohibited and are subject to an assessment of damages and penalties, under the provisions of the Federal and New York State False Claims Acts.

UNITED STATES DEPARTMENT OF TRANSPORTATION HOTLINE

Persons with knowledge of bid collusion (i.e., contractors, suppliers, work persons, etc.), or other questionable contract related practices (inadequate materials, poor workmanship, theft of materials, etc.), are encouraged to report such activities by calling the U.S. DOT HOTLINE. The HOTLINE number is 1-800-424-9071 and calls will be answered from 8:00 A.M. to 5:00 P.M. EST, Monday through Friday.

This HOTLINE is under the direction of the U.S. DOT's Inspector General. All information will be treated confidentially and the caller's anonymity will be respected.

NEW YORK STATE INSPECTOR GENERAL HOTLINE

Reports of New York State Governmental Misconduct may be made in strict confidence to the New York State Inspector General on the Toll Free Statewide HOTLINE or by writing to the Office of the State Inspector General. The Toll-Free Statewide HOTLINE telephone number is 1-800-367-4448 and calls will be answered between 9:00 A.M. and 5:00 P.M., Monday through Friday. The address of the Office of the Inspector General is P.O. Box 9, One Commerce Plaza, Albany, New York 12260.

(NO TEXT THIS PAGE)

NON-COLLUSIVE BIDDING CERTIFICATIONS

REQUIRED BY SECTION 139-D, STATE FINANCE LAW and SECTION 103-D OF GENERAL MUNICIPAL LAW

"Section 139-d, SFL and Section 103-d, GML, 'Statement of non-collusion in bids to the state.'

1. Every bid hereafter made to the state or any public department agency or official thereof, where competitive bidding is required by statute, rule or regulation, for work or services performed or to be performed or goods sold or to be sold, shall contain the following statement subscribed by the bidder and affirmed by such bidder as true under the penalties of perjury: Non-collusive bidding certification.

(a) By submission of this bid, each bidder and each person signing on behalf of any bidder certifies, and in the case of joint bid, each party thereto certifies as to its own organization, under penalty of perjury, that to the best of his knowledge and belief:

(1) The prices of this bid have been arrived at independently, without collusion, consultation, communication, or agreement, for the purposes of restricting competition, as to any matter relating to such prices with any other Bidder or with any competitor;

(2) Unless otherwise required by law, the prices which have been quoted in this bid have not been knowingly disclosed by the Bidder and will not knowingly be disclosed by the Bidder prior to opening, directly or indirectly, to any other Bidder or to any competitor; and

(3) No attempt has been made or will be made by the Bidder to induce any other person, partnership or corporation to submit or not to submit a bid for the purpose of restricting competition.

(b) A bid shall not be considered for award nor shall any award be made where (a)(1)(2)(3) above have not been complied with; provided however, that if in any case the bidder cannot make the foregoing certification, the bidder shall so state and shall furnish with the bid a signed statement which sets forth in detail the reasons therefore. Where (a)(1)(2) and (3) above have not been complied with, the bid shall not be considered for award nor shall any award be made unless the head of the purchasing unit of the state, public department or agency to which the bid is made, or his designee, determines that such disclosure was not for the purpose of restricting competition.

The fact that a bidder (a) has published price lists, rates, or tariffs covering items being procured, (b) has informed prospective customers of proposed or pending publication of new or revised price lists for such items or (c) has sold the same items to other customers at the same prices being bid, does not constitute, without more, a disclosure within the meaning of subparagraph 1(a).

2. Any bid hereafter made to the state or any public department, agency or official thereof by a corporate bidder for work or services performed or to be performed or goods sold or to be sold, where competitive bidding is required by statute, rule or regulation, and where such bid contains the certification referred to in subdivision one of this section, shall be deemed to have been authorized by the board of directors of the bidder and such authorization shall be deemed to include the signing and submission of the bid and the inclusion therein of the certificates as to non collusion as the act and deed of the corporation."

(A)2

"By submission of this bid, the bidder does hereby tender to the Owner this sworn statement pursuant to Section 1128 of Title 23, U. S. Code-Highways and does hereby certify, in conformance with said Section 112 of Title 23, U. S. Code-Highways that the said Contractor has not, either directly or indirectly, entered into any agreement, participated in any collusion, or otherwise taken any action in restraint of free competitive bidding in connection with the above contract."

NON COLLUSIVE BIDDING CERTIFICATION (49 CFR, 29)

The Contractor to whom the above identified contract is to be awarded does hereby tender to the New York State Department of Transportation this sworn statement pursuant to Section 112(c) of Title 23 U.S. Code *Highway* and does hereby certify, in conformance with said 23 USC 112(c) that the said Contractor has not, either directly or indirectly, entered into any agreement, participated in any collusion, or otherwise taken any action in restraint of free competitive bidding in connection with the above identified contract.

The signatory to this proposal, being duly sworn, certifies that, **EXCEPT AS NOTED BELOW**, its company and any person associated therewith in then capacity of owner, Partner, director, officer, or major stockholder (five percent or more ownership):

1) is not currently suspension, debarment, voluntary exclusion, or determination of ineligibility by any federal agency;

2) has not been suspended, debarred, voluntarily excluded or determined ineligible by any federal agency within that past three years;

3) does not have a proposed debarment pending; and

4) has not been indicted, convicted, or had a civil judgment rendered against it by a court of competent Jurisdiction in any matter involving fraud or official misconduct within the past three years.

EXCEPTIONS – List any relevant information, attaching additional sheets if necessary. (Exceptions will not necessarily result in disapproval, but will be considered in determining responsibility. For any exception noted, indicate below to whom it applies, the initiating agency, and dates of actions. Providing false information may result in criminal prosecution or administrative sanctions.)

NON COLLUSIVE BIDDING

BY SIGNING ONE OF THESE CERTIFICATIONS, THE CONTRACTOR CERTIFIES THAT HE UNDERSTANDS AND AGREES TO BE BOUND BY THE PROVISIONS OF THE FOLLOWING LAWS:

1. NEW YORK STATE FINANCE LAW, ARTICLE 9, SECTION 139-d
2. TITLE 49, CFR, PART 29
3. TITLE 23, U.S. CONE-HIGHWAYS, SECTION 112

THE CONTRACTOR SHOULD CHOOSE THE APPROPRIATE NOTARIZATION WHICH CORRESPONDS TO THE TYPE OF COMPANY (SOLE PROPRIETORSHIP, PARTNERSHIP, OR CORPORATION) THAT HE/SHE REPRESENTS OR IS AFFILIATED WITH. ALL BIDDERS SHOULD FILL OUT THE APPROPRIATE SECTION OF THE BIDDER INFORMATION SHEET.

BY EXECUTING THIS PROPOSAL, THE CONTRACTOR AGREES TO:

1. Perform all work listed in accordance with the Contract Documents at the unit prices bid; subject to the Changed conditions provisions if applicable;
2. All the terms and conditions of the non-collusive bidding certifications required by §139-d of the State Finance Law, and Section 112, Title 23, U.S. Code;
3. Certification of Specialty Items category selected, if contained in this proposal;
4. Certification of any other clauses required by this proposal and contained herein;
5. Certification, under penalty of perjury, as to the current history regarding suspensions, debarments, voluntary exclusions, determinations of ineligibility, indictments, convictions, or civil judgments required by 49 CFR, Part 29.
6. Contractor affirms that all information provided to the Department with respect to the requirements contained in State Finance Law §139j and §139k is complete, true and accurate.

Dated:_____, 20____

_____

(Legal Name of Person, Corporation, or Firm Which is Submitting Bid or Proposal)

BY:_____

(Signature of Person Representing Above)

AS:_____

(Official Title of Signator in Above Firm)

(Acknowledgment by Individual Contractor, if a Corporation)

STATE OF NEW YORK)

) SS:

COUNTY OF_____)

On this_____ day of _____, 20 _____, before me personally came _____, to me known and known to me to be the person who executed the above instrument, who being duly sworn by me, did depose and say that he/she resides at _____ , and that e/she is the _____ of the corporation described in and which executed the above instrument, and that he/she signed his/her name thereto on behave of said Corporation by order of the Board of Directors of said Corporation.

_____

Notary Public

(Acknowledgment by Co-Partnership Contractor)

STATE OF NEW YORK)

) SS:

COUNTY OF_____)

On this_____ day of _____, 20 _____, before me personally came _____, to me known and known to me to be the person described in and who executed the above instrument, who, being duly sworn by me, did for himself/herself depose and say that he/she is a member of the firm of _____, consisting of himself/herself and _____,and that he/she executed the foregoing instrument in the firm name of _____ and that he/she had authority to sign same, and did duly acknowledge to me that he/she executed same as the act and deed of said firm of _____ for the uses and purposes mentioned therein.

_____

Notary Public

(Acknowledgment by Individual Contractor)

STATE OF NEW YORK)

) SS:

COUNTY OF_____)

On this_____ day of _____, 20 _____, before me personally came _____, to me known and known to me to be the person described in and who executed the foregoing instrument, and that he/she acknowledged that he/she executed the same.

_____

Notary Public

NON-COLLUSIVE BIDDING CERTIFICATION BIDDER INFORMATION

Bidder to provide information listed below:

Bidder Address: _____

Street or P.O. Box No.

_____

City

_____

State **Zip Code**

Federal Identification No.: _____

Name of Contact Person: _____

Phone No. of Contact Person: __(____)_____

If Bidder is a Corporation:

President's Name & Address:

_____

Secretary's Name & Address:

_____

Treasurer's Name & Address:

_____

If Bidder is a Partnership:

Partner's Name & Address:

_____

Partner's Name & Address:

_____

If Bidder is a Sole Proprietorship:

Owner's Name & Address:

_____

MA 2A (03-09-33)
NYCDOT

NEW YORK CITY DEPARTMENT OF DESIGN AND CONSTRUCTION
DEBARMENT HISTORY CERTIFICATION
CONTRACT NO. _____

I, _____, being duly sworn, certifies that,
(PRESIDENT OF AUTHORIZED OFFICIAL)

except as noted herein, _____ or any person
(THE COMPANY)

associated therewith in the capacity of owner, partner, director, officer, principal investigator, project director, manager, auditor, or any position involving the administration of Federally Aided Projects:

is not currently under suspension, debarment, voluntary exclusion, or determination of ineligibility by any governmental entity;

has not been suspended, debarred, voluntary excluded or determined ineligible by any governmental entity within the past three (3) years;

does not have a proposed debarment pending; and

has not been indicted, convicted, or had a civil judgement rendered against it by a court of competent jurisdiction in any matter involving fraud or official misconduct within the past three (3) years.

(INSERT EXCEPTIONS HERE. ATTACH SUPPLEMENTAL SHEETS AS NECESSARY)

Exceptions will not necessarily result in denial of approval, but will be considered in determining responsibility. For any exception noted herein, indicate to whom it applies, initiating governmental entity and dates of action. A material false statement willfully or fraudulently made in connection with this certification may result in rendering the company not responsible for the project and any future projects, and in addition may subject the person making the false statement to criminal charges.

_____	_____
(PRINT NAME)	(SIGNATURE)
_____	_____
(TITLE)	(DATE)

Subscribed and sworn to before me this _____ day of _____, 20_____.

MA 2A (03-09-33)
NYCDOT

NEW YORK CITY DEPARTMENT OF DESIGN AND CONSTRUCTION
DEBARMENT HISTORY CERTIFICATION
CONTRACT NO. _____

GOVERNMENTAL ENTITY:

Governmental Entities shall include any/all city, state and federal public agencies, quasi-public agencies, authorities and corporations, public development corporations, and local development corporations.

COMPANY:

Companies shall include the persons or affiliates for which a suspension or debarment decision has been rendered, and shall include all subsidiaries, divisions and other organizational elements thereof unless said decision is limited by its terms to one or more specifically identified individuals or organizational elements or to specific types of transactions.

PERSON:

Persons shall include any individual, corporation, partnership, association or legal entity however organized, including any subsidiary of the foregoing.

SUBSIDIARY:

Subsidiaries shall include any corporation, partnership, association or legal entity however organized, which is owned or controlled by another person.

AFFILIATE:

Persons are affiliates of one another if, directly or indirectly, one owns, controls, or has the power to control the other, or a third person owns, controls, or has the power to control both.

CONTROL:

Control shall be taken to mean the power to exercise, either directly or indirectly, a controlling influence over management, policies or activities of a person, whether through ownership of voting securities, through one or more intermediary persons, or otherwise. Indications of control shall include, but not be limited to: a person who owns or has the power to vote more than 25 percent of the voting securities of another person, or 25 percent of the total equity if the other person has no voting securities; interlocking management or ownership; identity of interests among family members; shared facilities and equipment; common use of employees; and establishment, following debarment, suspension or other exclusion decision, of any organization or entity which is to operate in the same business or activity and is to have substantially the same management, owner-ship or principal employees as the debarred, suspended or excluded person.

Lobbying Activity Certification

The prospective participant certifies, by signing and submitting this bid or proposal, to the best of his or her knowledge and belief, that:

(1) No Federal appropriated funds have been paid or will be paid, by or on behalf of the undersigned, to any person for influencing or attempting to influence an officer or employee of any Federal agency, a Member of Congress, an officer or employee of Congress, or an employee of a Member of Congress in connection with the awarding of any federal contract, the making of any Federal grant, the making of any Federal loan, the entering into of any cooperative agreement, and the extension, continuation, renewal, amendment, or modification of any Federal contract, grant, loan, or cooperative agreement.

(2) If any funds other than Federal appropriated funds have been paid or will be paid to any person for influencing or attempting to influence an officer or employee of any Federal agency, a Member of Congress, an officer or employee of Congress, or an employee of a Member of Congress in connection with this Federal contract, grant, loan, or cooperative agreement, the undersigned shall complete and submit Standard Form LLL, "Disclosure Form to Report Lobbying", in accordance with its instructions. (See Exhibit 1 annexed hereto)

This certification is a material representation of fact upon which reliance was placed when this transaction was made or entered into. Submission of this certification is a prerequisite for making or entering into this transaction imposed by Section 1352, Title 31, U.S. Code. Any person who fails to file the required certification shall be subject to a civil penalty of not less than $10,000 and not more than $100,000 for each such failure.

The prospective participant also agrees by submitting his or her bid or proposal that he or she shall require that the language of this certification be included in all lower tier subcontracts, which exceed $100,000 and that all such subrecipients shall certify and disclose accordingly.

DISCLOSURE OF LOBBYING ACTIVITIES

Approved by OMB
0348-0046

Complete this form to disclose lobbying activities pursuant to 31 U.S.C. 1352
(See reverse for public burden disclosure.)

1. Type of Federal Action:	**2. Status of Federal Action:**	**3. Report Type:**
☐ a. contract b. grant c. cooperative agreement d. loan e. loan guarantee f. loan insurance	☐ a. bid/offer/application b. initial award c. post-award	☐ a. initial filing b. material change **For Material Change Only:** year _____ quarter _____ date of last report _____

4. Name and Address of Reporting Entity:	**5. If Reporting Entity in No. 4 is a Subawardee, Enter Name and Address of Prime:**
☐ **Prime** ☐ **Subawardee** Tier _____, *if known*: **Congressional District**, *if known*:	 **Congressional District**, *if known*:
6. Federal Department/Agency:	**7. Federal Program Name/Description:** CFDA Number, *if applicable*: _____
8. Federal Action Number, *if known*:	**9. Award Amount**, *if known*: $
10. a. Name and Address of Lobbying Registrant (*if individual, last name, first name, MI*):	**b. Individuals Performing Services** (*including address if different from No. 10a*) (*last name, first name, MI*):
11. Information requested through this form is authorized by title 31 U.S.C. section 1352. This disclosure of lobbying activities is a material representation of fact upon which reliance was placed by the tier above when this transaction was made or entered into. This disclosure is required pursuant to 31 U.S.C. 1352. This information will be reported to the Congress semi-annually and will be available for public inspection. Any person who fails to file the required disclosure shall be subject to a civil penalty of not less that $10,000 and not more than $100,000 for each such failure.	Signature: _____ Print Name: _____ Title: _____ Telephone No.: _____ Date: _____
Federal Use Only:	Authorized for Local Reproduction Standard Form LLL (Rev. 7-97)

INSTRUCTIONS FOR COMPLETION OF SF-LLL, DISCLOSURE OF LOBBYING ACTIVITIES

This disclosure form shall be completed by the reporting entity, whether subawardee or prime Federal recipient, at the initiation or receipt of a covered Federal action, or a material change to a previous filing, pursuant to title 31 U.S.C. section 1352. The filing of a form is required for each payment or agreement to make payment to any lobbying entity for influencing or attempting to influence an officer or employee of any agency, a Member of Congress, an officer or employee of Congress, or an employee of a Member of Congress in connection with a covered Federal action. Complete all items that apply for both the initial filing and material change report. Refer to the implementing guidance published by the Office of Management and Budget for additional information.

1. Identify the type of covered Federal action for which lobbying activity is and/or has been secured to influence the outcome of a covered Federal action

2. Identify the status of the covered Federal action.

3. Identify the appropriate classification of this report. If this is a followup report caused by a material change to the information previously reported, enter the year and quarter in which the change occurred. Enter the date of the last previously submitted report by this reporting entity for this covered Federal action.

4. Enter the full name, address, city, State and zip code of the reporting entity. Include Congressional District, if known. Check the appropriate classification of the reporting entity that designates if it is, or expects to be, a prime or subaward recipient. Identify the tier of the subawardee, e.g., the first subawardee of the prime is the 1st tier. Subawards include but are not limited to subcontracts, subgrants and contract awards under grants.

5. If the organization filing the report in item 4 checks "Subawardee," then enter the full name, address, city, State and zip code of the prime Federal recipient. Include Congressional District, if known.

6. Enter the name of the Federal agency making the award or loan commitment. Include at least one organizational level below agency name, if known. For example, Department of Transportation, United States Coast Guard.

7. Enter the Federal program name or description for the covered Federal action (item 1). If known, enter the full Catalog of Federal Domestic Assistance (CFDA) number for grants, cooperative agreements, loans, and loan commitments.

8. Enter the most appropriate Federal identifying number available for the Federal action identified in item 1 (e.g., Request for Proposal (RFP) number; Invitation for Bid (IFB) number; grant announcement number; the contract, grant, or loan award number; the application/proposal control number assigned by the Federal agency). Include prefixes, e.g., "RFP-DE-90-001."

9. For a covered Federal action where there has been an award or loan commitment by the Federal agency, enter the Federal amount of the award/loan commitment for the prime entity identified in item 4 or 5.

10. (a) Enter the full name, address, city, State and zip code of the lobbying registrant under the Lobbying Disclosure Act of 1995 engaged by the reporting entity identified in item 4 to influence the covered Federal action.

    (b) Enter the full names of the individual(s) performing services, and include full address if different from 10 (a). Enter Last Name, First Name, and Middle Initial (MI).

11. The certifying official shall sign and date the form, print his/her name, title, and telephone number.

According to the Paperwork Reduction Act, as amended, no persons are required to respond to a collection of information unless it displays a valid OMB Control Number. The valid OMB control number for this information collection is OMB No. 0348-0046. Public reporting burden for this collection of information is estimated to average 10 minutes per response, including time for reviewing instructions, searching existing data sources, gathering and maintaining the data needed, and completing and reviewing the collection of information. Send comments regarding the burden estimate or any other aspect of this collection of information, including suggestions for reducing this burden, to the Office of Management and Budget, Paperwork Reduction Project (0348-0046), Washington, DC 20503.

DISCLOSURE OF LOBBYING ACTIVITIES

CONTINUATION SHEET

APPROVED BY OMB
0346-0046

REPORTING ENTITY:_____ **PAGE** _____ **OF** _____

Authorized for Local Reproduction - Standard form LLL

(NO TEXT THIS PAGE)

PROVISIONS RELATING TO THE NEW YORK STATE LABOR LAW, PREVAILING WAGES, AND THE USE OF CONVICT LABOR AND MATERIALS ON FEDERAL & STATE CONTRACTS

GENERAL PROVISIONS. All projects funded with Federal aid and let to contract in New York State shall conform to the provisions of the New York State Labor Law, except that in accordance with the authorization in Article 4, Section 85 of the New York State Highway Law, any provisions of the above referenced Labor Law which are in conflict with the following enumerated mandatory Federal Aid highway construction compliance requirements, as contained in Section 635 of the Code of Federal Regulations, Title 23-Highways, and other Federal legislation, rules, and regulations, as referenced below, are superseded:

CONVICT LABOR. No convict labor, unless performed by convicts who are on parole, supervised release, or probation, shall be employed in construction or used for maintenance or any other purposes at the site or within the limits of any Federal Aid highway construction project from the time of award of the contract or the start of work on force account until final acceptance of the work by the Owner.

SELECTION OF LABOR. No procedures or requirements shall be imposed by any state or municipal subdivision thereof which will operate to discriminate against the employment of labor from any other state, possession, or territory of the United States, in the construction of a Federal Aid project. The selection of labor to be employed by the Contractor on any Federal Aid project shall be of his/her own choosing.

WAGE RATES ON FEDERAL AID PROJECTS. Attention is directed to the statutory provisions governing the prevailing rates of wages for workmen, mechanics, and laborers who are employed on this project. Section 220 of the New York State Labor Law, as amended, requires that the wages paid for a legal day's work shall be not less than the rate of wages plus the supplements prevailing at the time the work is performed, the current schedules of which shall be included in the contract documents. Such schedules may be amended or supplemented from time to time, and such amendments or supplements shall be forwarded to the Contractor.

The Federal Aid Highway Act of 1968 provides for the payment of wages at rates not less than those determined in accordance with the Davis-Bacon Act (40 USC, Section 276-a), the schedule of which shall also be included in the contract documents.

On-site materials suppliers, in addition to all subcontractors, are subject to the provisions of the Davis-Bacon Act. This will not necessarily be construed as causing the on-site material suppliers to be classified as subcontractors as part of the 50% limitation on the subcontracting of this project.

In case of a variance between (1) the schedules of prevailing rates of wages and supplements as determined under Section 220 of the New York State Labor Law, and (2) the schedule of rates of wages as determined pursuant to the Davis-Bacon Act, the Contractor shall accept and use the schedule or schedules that establish the higher rate of wages as the minimum for the workmen who are employed on the project.

CONSTRUCTION BY FEDERAL AGENCIES. When construction on Federal Aid highways is being performed by any Federal agency under its procedures and by Federal contract, the labor standards relating to direct federal contracts shall be applicable.

NON-DISCRIMINATION. Employment shall be provided without regard to race, color, religion, sex, or national origin.

CONVICT-PRODUCED MATERIALS. The use of convict-produced materials on any Federal or Federally-assisted contract must comply with the following requirements:

a. Materials produced by convict labor may only be incorporated in a Federal Aid highway construction project if such materials have been:

1. Produced by convicts who are on parole, supervised release, or probation from a prison; or

2. Produced in a qualified prison facility and the cumulative annual production amount of such materials for use in Federal Aid highway construction does not exceed the amount of such materials produced in such facility for use in Federal Aid highway construction during the 12-month period ending July 1, 1987.

b. "Qualified prison facility" means any prison facility in which convicts, during the 12-month period ending July 1. 1997, produced materials for use in Federal Aid highway construction projects.

c. Standard State and Federal Aid contract procedures may be used to assure compliance with the requirements of this paragraph.

FEDERAL WAGE RATES

The following (14) fourteen pages contain the Federal Wage Rates at the time of bidding. Current rates can be found at: www.wdol.gov/wdol/scafiles/davisbacon/ny3.dvb

General Decision Number: NY160003 08/19/2016 NY3

Superseded General Decision Number: NY20150003

State: New York

Construction Types: Building, Heavy, Highway and Residential

Counties: Bronx, Kings, New York, Queens and Richmond Counties in New York.

BUILDING & RESIDENTIAL CONSTRUCTION PROJECTS (includes single family homes and apartments up to and including 4 stories), HEAVY AND HIGHWAY CONSTRUCTION PROJECTS

Note: Under Executive Order (EO) 13658, an hourly minimum wage of $10.15 for calendar year 2016 applies to all contracts subject to the Davis-Bacon Act for which the solicitation was issued on or after January 1, 2015. If this contract is covered by the EO, the contractor must pay all workers in any classification listed on this wage determination at least $10.15 (or the applicable wage rate listed on this wage determination, if it is higher) for all hours spent performing on the contract in calendar year 2016. The EO minimum wage rate will be adjusted annually. Additional information on contractor requirements and worker protections under the EO is available at www.dol.gov/whd/govcontracts.

Modification Number	Publication Date
0	01/08/2016
1	01/22/2016
2	02/05/2016
3	02/19/2016
4	03/11/2016
5	04/01/2016
6	04/08/2016
7	05/13/2016
8	05/20/2016
9	06/17/2016
10	07/29/2016
11	08/12/2016
12	08/19/2016

ASBE0012-001 12/28/2015

	Rates	Fringes
Asbestos Workers/Insulator Includes application of all insulating materials, protective coverings, coatings and finishes to all types of mechanical systems	$ 64.36	32.46
HAZARDOUS MATERIAL HANDLER	$ 39.00	12.75

BOIL0005-001 01/01/2013

	Rates	Fringes
BOILERMAKER	$ 49.47	33%+22.87+a

FOOTNOTE:

a. PAID HOLIDAYS: New Year's Day, Thanksgiving Day, Memorial Day, Independence Day, Labor Day and Good Friday, Friday after Thanksgiving, Christmas Eve Day and New Year's Eve

---

BRNY0001-001 07/01/2015

	Rates	Fringes
BRICKLAYER	$ 56.77	24.75
MASON - STONE	$ 48.71	28.41

BRNY0001-002 07/01/2015

	Rates	Fringes
Pointer, cleaner and caulker	$ 48.62	24.82

BRNY0004-001 01/01/2016

	Rates	Fringes
MARBLE MASON	$ 56.89	32.21

BRNY0007-001 01/01/2016

	Rates	Fringes
TERRAZZO FINISHER	$ 49.47	33.23
TERRAZZO WORKER/SETTER	$ 51.08	33.24

BRNY0020-001 01/01/2016

	Rates	Fringes
MARBLE FINISHER	$ 45.35	31.19

BRNY0024-001 01/01/2016

	Rates	Fringes
BRICKLAYER		
MARBLE POLISHERS	$ 39.73	24.41

BRNY0052-001 06/01/2015

	Rates	Fringes
Tile Layer	$ 47.15	24.74

BRNY0088-001 12/07/2015

	Rates	Fringes
TILE FINISHER	$ 42.42	29.13

CARP0001-009 07/01/2016

	Rates	Fringes
CARPENTER		
Carpenters	$ 52.50	45.58

Soft Floor Layers.....$ 52.50 45.58

CARP0740-001 07/01/2016

	Rates	Fringes
MILLWRIGHT	$ 51.50	51.71

CARP1556-006 07/01/2016

	Rates	Fringes
Dock Builder & Piledrivermen		
DOCKBUILDERS	$ 51.63	47.95

CARP1556-007 07/01/2016

	Rates	Fringes
Diver Tender	$ 46.44	47.95
Diver	$ 65.38	47.95

CARP1556-011 07/01/2016

	Rates	Fringes
Carpenters:		
TIMBERMEN	$ 46.99	47.56

ELEC0003-001 05/13/2015

	Rates	Fringes
ELECTRICIAN		
Electricians	$ 54.00	61.871%
Jobbing, and maintenance and repair work	$ 25.30	15.13+a

PAID HOLIDAYS:

a. New Years Day, Martin Luther King, Jr.'s Birthday, Washington's Birthday, Memorial Day, Independence Day, Labor Day, Columbus Day, Election Day, Thanksgiving Day, the day after Thanksgiving Day, and Christmas Day

---

ELEC1049-001 04/03/2016

QUEENS COUNTY

	Rates	Fringes
Line Construction (Substation and Switching structures pipe type cable installation and maintenance jobs or projects; Railroad electrical distribution/transmission systems maintenance (when work is not performed by railroad employees) Overhead and Underground transmission/distribution line work. Fiber optic, telephone cable and equipment)		

Groundman	$ 31.37	21.72
Heavy Equipment Operator	$ 41.82	25.06
Lineman and Cable Splicer	$ 52.28	28.39
Tree Trimmer	$ 30.09	14.12

ELEV0001-002 03/17/2013

	Rates	Fringes
ELEVATOR MECHANIC		
Elevator Constructor	$ 57.01	27.605+a+b
Modernization and Repair	$ 45.14	27.455+a+b

FOOTNOTE:

a. PAID HOLIDAYS: New Year's Day, Good Friday, President's Day, Memorial Day, Independence Day, Labor Day, Columbus Day, Veteran's Day, Thanksgiving Day, Friday after Thanksgiving, and Christmas Day.

b. PAID VACATION: An employee who has worked less than 5 years shall recieve vacation pay credit on the basis of 4% of his hourly rate for all hours worked; an employee who has worked 5 to 15 years shall receive vacation pay credit on the basis of 6% of his hourly rate for all hours worked; an employee who has worked 15 or more years shall receive vacation pay credit on the basis of 8% of his hourly rate for all hours worked.

---

* ENGI0014-001 07/01/2013

	Rates	Fringes
POWER EQUIPMENT OPERATOR (HEAVY & HIGHWAY)		
GROUP 1	$ 85.00	28.65
GROUP 2	$ 70.10	28.65
GROUP 3	$ 72.34	28.65
GROUP 4	$ 70.63	28.65
GROUP 5	$ 69.23	28.65
GROUP 6	$ 66.45	28.65
GROUP 7	$ 67.70	28.65
GROUP 8	$ 65.76	28.65
GROUP 9	$ 64.34	28.65
GROUP 10	$ 61.53	28.65
GROUP 11	$ 57.46	28.65
GROUP 12	$ 58.74	28.65
GROUP 13	$ 59.21	28.65
GROUP 14	$ 44.63	28.65
GROUP 15	$ 41.44	28.65
POWER EQUIPMENT OPERATOR (PAVEMENT-HEAVY & HIGHWAY)		
Asphalt Plants	$ 54.17	28.65+a
Asphalt roller	$ 64.04	28.65+a
Asphalt spreader	$ 65.76	28.65+a
POWER EQUIPMENT OPERATOR (STEEL ERECTION)		
Compressors, Welding Machines	$ 41.84	28.65
Cranes, Hydraulic Cranes, 2 drum derricks, Forklifts, Boom Trucks	$ 70.50	28.65
Three drum derricks	$ 73.37	28.65
POWER EQUIPMENT OPERATOR		

(UTILITY)

Horizontal Boring Rig.....	$ 62.53	28.65
Off shift compressors.....	$ 51.93	28.65
Utility Compressors.....	$ 41.18	28.65

POWER EQUIPMENT OPERATOR CLASSIFICATIONS

GROUP 1: Tower crane

GROUP 2: Backhoes, power shovel, Hydraulic clam shells, moles and machines of a similar type

GROUP 3: Mine hoists and crane, etc. used as mine hoists

GROUP 4: Gradalls, keystones, cranes (with digging buckets), bridge cranes, trenching machines, vermeer cutter and machines of a similar nature

GROUP 5: Piledrivers, derrick boats, tunnel shovels

GROUP 6: All drills, and machines of a similar nature

GROUP 7: Back filling machines, cranes, mucking machines, dual drum pavers

GROUP 8: Mixers (concrete w/loading attachments), concrete pavers, cableways, land derricks, power house (low pressure units), concrete pumps

GROUP 9: Concrete plants, well drilling machines, stone crushers double drum hoist, power house (other than above)

GROUP 10: Concrete mixers

GROUP 11: Elevators

GROUP 12: Concrete breaking machine, Hoists (single drum), load masters, locomotive and dinkies over 10 tons

GROUP 13: Vibratory console

GROUP 14: Compressors (portable 3 or more in battery), tugger machine (caissons), well point pumps, chum drill

GROUP 15: Boilers, (high pressure, compressors (portable, single, or 2 in battery, not over 100' apart), pumps (river cofferdam and welding machines (except where arc is operated by members of local 15) push button machines, all engines irrespective of power (power pac) used to drive auxilliary equipment, air, hydraulic etc.

PREMIUMS ON CRANES (Crawler or Truck):
100' to 149' boom - add .50
150' to 249' boom - add .75
250' to 349' boom - add 1.00
350' to 450' boom - add 1.50

Premiums for Cranes on Steel Erection:
100' to 149' boom - add 1.75
150' to 249' boom - add 2.00
250' to 349' boom - add 2.25
350' to 450' boom - add 2.75
Tower crane - add 2.00

FOOTNOTE:

a. Paid Holidays: New Year's Day; Lincoln's Birthday; Washington's Birthday; Memorial Day; Independence Day; Labor Day; Veterans Day; Columbus Day; Election Day; Thanksgiving Day; and Christmas Day; provided the employee works one day the payroll week in which the holiday occurs.

ENGI0014-002 07/01/2013

	Rates	Fringes
Power Equipment Operator		
BUILDING & RESIDENTIAL		
GROUP 1	$ 65.83	28.65+a
GROUP 2	$ 69.74	28.65+a
GROUP 3	$ 63.58	28.65+a
GROUP 4	$ 57.82	28.65+a
GROUP 5	$ 43.28	28.65+a

POWER EQUIPMENT OPERATORS CLASSIFICATIONS

GROUP 1: Double drum

GROUP 2: Stone derrick, cranes, hydraulic cranes, boom trucks

GROUP 3: 4 pole Hoist, Single Drum Hoists

GROUP 4: Fork lift, house cars, plaster (platform machine), plaster bucket, concrete pump and all other equipment used for hoisting material

GROUP 5: Compressors, welding machines (cutting concrete work), paint spraying, sand blasting, pumps (with the exclusion of concrete pumps), house car (settlement basis only), all engines irrespective of power (power pac) used to drive auxiliary equipment, air, hydraulic, etc., boilers

Premiums for Cranes:

100'-149' boom	add	1.75
150'-249' boom	add	2.00
250'-349' boom	add	2.25
350'-450' boom	add	2.75
Tower cranes	add	2.00

FOOTNOTE:

a. PAID HOLIDAYS: New Year's Day, Lincoln's Birthday, Memorial Day, Independence Day, Labor Day, Veteran's Day, Columbus Day, Election Day, Thanksgiving Day, and Christmas Day, provided the employee works one day in the payroll week in which the holiday occurs

---

* ENGI0015-001 07/01/2016

	Rates	Fringes
POWER EQUIPMENT OPERATOR		
HEAVY AND HIGHWAY		
GROUP 1	$ 65.94	32.95
GROUP 2	$ 63.98	32.95
GROUP 3	$ 60.69	32.95
GROUP 4	$ 57.42	32.95
GROUP 5	$ 39.70	32.95

POWER EQUIPMENT OPERATORS CLASSIFICATIONS

GROUP 1: Cherrypickers 20 tons and over and loaders (rubber-tired and/or tractor type with a manfufacturer's rated capacity of six cubic yards and over

GROUP 2: Backhoes, Basin Machines, Groover, Mechanical Sweepers, Bobcat, Boom Truck, Barrier Transport (Barrier Mover) and machines of a similar nature, Boat Captains, Boat Operators, operation of Churn Drills and machines of a similar nature, Stetco Silent Hoist and machines of a similar nature, Vac-alls, Meyers Machines, John Beam and machines of a similar nature, Ross Carriers and Travel Lifts and machines of a similar nature, Bulldozers, Scrapers, and Turn-a Pulls, Tugger Hoist (used exclusively for handling excavated material), Tractors with attachments, Hyster and Roustabout Cranes, Cherrypickers, Austin Western, Grove and machines of a similar nature, Scoopmobiles, Monorails, Conveyors, Trenchers, Loaders-Rubber-tired and Tractor, Barber Greene, Eimco Loaders and Eimco Backhoes, Mighty Midget and similar breakers and tampers, Curb and Gutter Pavers and Motor Patrol, Motor Graders and all machines of a similar nature, Locomotives ten (10) tons or under, Mini-Max, Break-Tech and machines of a similar nature, Milling Machines, robotic and demolition machines and machines of a similar nature including Bobcat, Pile Rig Rubber-tired Excavator (37,000 lbs. and under), 2 man auger

GROUP 3: Minor Equipment such as Tractors, Post Hole Diggers and Drivers, Ditch Witch (Walk Behind), Road Finishing Machines, Rollers (five (5) tons and under), Tugger Hoists, Dual Purpose Trucks, Fork Lifts and Dempsey Dumpsters

GROUP 4: Oilers

GROUP 5: Compressors, welding machines (cutting concrete work), paint spraying, sand blasting, pumps (with the exclusion of concrete pumps), house car (settlement basis only), all engines irrespective of power (power pac) used to drive auxiliary equipment, air, hydraulic, etc., boilers

Premiums for Cranes:

100'-149' boom -	add	1.75
150'-249' boom -	add	2.00
250'-349' boom -	add	2.25
350'-450' boom -	add	2.75
Tower cranes	add	2.00

FOOTNOTE:

a. PAID HOLIDAYS: New Year's Day, Lincoln's Birthday, Memorial Day, Independence Day, Labor Day, Veteran's Day, Columbus Day, Election Day, Thanksgiving Day, and Christmas Day, provided the employee works one day in the payroll week in which the holiday occurs

---

* ENGI0015-002 07/01/2016

	Rates	Fringes
POWER EQUIPMENT OPERATOR		
BUILDING		
GROUP 1	$ 65.94	32.95
GROUP 2	$ 63.98	32.95

POWER EQUIPMENT OPERATORS CLASSIFICATIONS
GROUP 1: Oiler
GROUP 2: Oilers on Crawler Cranes, Backhoes, Trenching machines, Gunite machines, Compressors (3 or more in Battery)
FOOTNOTE:
a. PAID HOLIDAYS: New Year's Day, Lincoln's Birthday, Memorial Day, Independence Day, Labor Day, Veteran's Day, Columbus Day, Election Day, Thanksgiving Day, and Christmas Day, provided the employee works one day in the payroll week in which the holiday occurs

---

IRON0040-002 07/01/2016

BRONX, NEW YORK, RICHMOND

	Rates	Fringes
IRONWORKER, STRUCTURAL	$ 49.50	69.74

IRON0046-003 07/01/2014

	Rates	Fringes
IRONWORKER METALLIC LATHERS AND REINFORCING IRONWORKERS	$ 40.60	30.56

IRON0197-001 07/01/2015

	Rates	Fringes
IRONWORKER STONE DERRICKMAN	$ 44.84	38.03

IRON0361-002 07/01/2016

KINGS, QUEENS

	Rates	Fringes
Ironworkers: (STRUCTURAL)	$ 49.50	69.74

IRON0580-001 07/01/2015

	Rates	Fringes
IRONWORKER, ORNAMENTAL	$ 43.20	47.42

LABO0006-001 07/01/2013

	Rates	Fringes
LABORER (Cement and Concrete Workers)	$ 42.38	20.52

LABO0029-001 07/01/2016

	Rates	Fringes
Laborers: Heavy Blasters (hydraulic trac		

drill)	$ 45.78	33.94
Blasters	$ 44.93	33.94
Hydraulic Trac Drill	$ 40.12	33.94
Jackhammers, Chippers, Spaders, Concrete Breakers, All Other Pneumatic Tools, Walk Behind Self-Propelled Hydraulic Asphalt and Concrete Breaker	$ 38.23	33.94
Powder Carriers	$ 34.20	33.94

LABO0078-001 02/01/2013

	Rates	Fringes
LABORERS		
BUILDING CONSTRUCTION ASBESTOS (Removal, Abatement, Encapsulation or Decontamination of asbestos); LEAD; & HAZARDOUS WASTE LABORERS (Hazardous Waste, Hazardous Materials, Biochemical and Mold Remediation, HVAC, Duct Cleaning, Re-spray Fireproofing, etc)	$ 35.90	14.75

LABO0079-001 01/01/2016

	Rates	Fringes
Laborers Building Construction		
Demolition Laborers		
Tier A	$ 37.89	24.91
Tier B	$ 26.68	18.45
Mason Tenders	$ 39.27	25.98

CLASSIFICATIONS

TIER A: Responsible for the removal of all interior petitions and structural petitions that can consist of sheet rock, block or masonry. Also, all structural slab openings for ducts, mechanical, shafts, elevators, slab openings and exterior walls where the building is not being completely demolitioned.

TIER B: Responsible for shoveling of debris into containers, pushing containers from the inside to the outside of the building.

LABO0147-001 07/01/2013

	Rates	Fringes
LABORERS (FREE AIR & TUNNEL)	$ 52.23	37.23

Maintenance Men, Inside Muck Lock Tenders, Pump Men, Electricians, Cement Finishers, Caulkers, Hydraulic Men, Shield Men, Monorail Operators, Motor Men, Conveyor Men, Powder Carriers, Pan Men, Riggers, Chuck Tenders, Track Men Painters, Nippers, Brakemen, Cable Men, Hose Men, Grout

Men, Gravel Men, Form Workers, Concrete Workers, Tunnel Laborers, Mole Nipper (one (1) Mole Sipper per Working Shaft per Shift for up to and including Two (2) Moles

---

LABO0731-001 07/01/2014

	Rates	Fringes
LABORER		
Building, Heavy and Residential Construction		
LABORER: (Asbestos, Lead, Hazardous Waste Removal (including soil)/CEMENT/CONCRETE	$ 39.85	34.78
UTILITY LABORER	$ 39.70	34.78

Paid Holidays: Labor Day and Thanksgiving Day

LABO1010-001 07/01/2011

	Rates	Fringes
Laborers:		
HIGHWAY CONSTRUCTION		
Fence Installer & Repairer	$ 38.34	30.25
FORMSETTERS	$ 42.21	30.25
LABORERS	$ 38.34	30.25
Landscape Planting & Maintenance	$ 38.34	30.25
Maintenance Safety Surface	$ 38.34	30.25
Slurry/Sealcoater/Play Equipment Installer	$ 38.34	30.25
Small Equipment Operator (Not Operating Engineer)	$ 38.34	30.25
Small Power Tools Operator	$ 38.34	30.25

FOOTNOTES:

a. PAID HOLIDAYS: Memorial Day, Fourth of July, Labor Day, Columbus Day, Election Day and Thanksgiving Day, provided the employee has worked one (1) day in the calendar week in which the said holiday occurs.

LABO1010-002 07/01/2011

	Rates	Fringes
Laborers-Asphalt Construction:		
Micro Paver	$ 44.86	30.25
Raker	$ 44.37	30.25
Screedperson	$ 44.86	30.25
Shoveler (Production Paving Only)	$ 41.08	30.25
Small Equipment Operator (Asphalt)	$ 41.08	30.25

PAIN0009-001 11/01/2015

	Rates	Fringes
GLAZIER	$ 43.95	36.82
PAINTER		

Painters, Drywall
Finishers, Lead Abatement
Worker.....$ 41.75 20.87
Spray, Scaffold and
Sandblasting.....$ 46.75 21.87

PAIN0806-001 10/01/2015

	Rates	Fringes
Painters:		
Structural Steel and Bridge	$ 49.00	37.13

PAIN1974-001 12/26/2012

	Rates	Fringes
Painters:		
Drywall Tapers/Pointers	$ 43.82	22.01

PLAS0262-001 02/01/2016

	Rates	Fringes
PLASTERER	$ 44.43	28.15

PLAS0262-002 02/01/2016

KINGS AND QUEENS COUNTIES

	Rates	Fringes
LASTERER	$ 44.43	28.15

PLAS0780-001 07/01/2014

	Rates	Fringes
CEMENT MASON/CONCRETE FINISHER	$ 45.88	39.70

PLUM0001-001 01/01/2016

	Rates	Fringes
PLUMBER		
MECHANICAL EQUIPMENT AND SERVICE		
Any repair and/or replacement of the present plumbing system that does not change the existing roughing	$ 38.77	13.34
PLUMBERS:	$ 65.67	29.00

PLUM0638-001 06/29/2016

	Rates	Fringes
PLUMBER		
SERVICE FITTERS	$ 26.30	2.55
SPRINKLER FITTERS, STEAMFITTERS	$ 61.81	48.14

Service Fitter work shall consist of all repair, service and maintenance work on domestic, commercial and industrial

refrigeration, air conditioning and air cooling, stoker and oil burner apparatus and heating apparatus etc., including but not exclusively the charging, evacuation, leak testing and assembling for all machines for domestic, commercial and industrial refrigeration, air conditioning and heating apparatus. Also, work shall include adjusting, including capacity adjustments, checking and repairing or replacement of all controls and start up of all machines and repairing all defects that may develop on any system for domestic, commercial and industrial refrigeration and all air conditioning, air cooling, stoker and oil burner apparatus and heating apparatus regardless of size or type.

ROOF0008-003 07/01/2014

	Rates	Fringes
ROOFER	$ 40.70	25.14

SHEE0028-002 07/31/2014

	Rates	Fringes
SHEET METAL WORKER		
BUILDING CONSTRUCTION	$ 50.91	36.70
RESIDENTIAL CONSTRUCTION	$ 27.22	16.48

TEAM0282-001 07/01/2015

	Rates	Fringes
TRUCK DRIVER		
Asphalt	$ 39.96	44.7525+a
Euclids & Turnapulls	$ 40.06	44.7525+a
High Rise	$ 48.36	42.9525+a

FOOTNOTES:

PAID HOLIDAYS: New Year's Day, Presidents' Day, Memorial Day, Independence Day, Labor Day, Columbus Day, Election Day, Veterans' Day (Armistice Day), Thanksgiving Day, Day after Thanksgiving and Christmas Day. Employees working two (2) days in the calendar week in which a holiday falls are to be paid for such holiday, provided that they shape each remaining workday during such calendar week.

WELDERS - Receive rate prescribed for craft performing operation to which welding is incidental.

==========

Unlisted classifications needed for work not included within the scope of the classifications listed may be added after award only as provided in the labor standards contract clauses (29CFR 5.5 (a) (1) (ii)).

The body of each wage determination lists the classification

and wage rates that have been found to be prevailing for the cited type(s) of construction in the area covered by the wage determination. The classifications are listed in alphabetical order of "identifiers" that indicate whether the particular rate is a union rate (current union negotiated rate for local), a survey rate (weighted average rate) or a union average rate (weighted union average rate).

Union Rate Identifiers

A four letter classification abbreviation identifier enclosed in dotted lines beginning with characters other than "SU" or "UAVG" denotes that the union classification and rate were prevailing for that classification in the survey. Example: PLUM0198-005 07/01/2014. PLUM is an abbreviation identifier of the union which prevailed in the survey for this classification, which in this example would be Plumbers. 0198 indicates the local union number or district council number where applicable, i.e., Plumbers Local 0198. The next number, 005 in the example, is an internal number used in processing the wage determination. 07/01/2014 is the effective date of the most current negotiated rate, which in this example is July 1, 2014.

Union prevailing wage rates are updated to reflect all rate changes in the collective bargaining agreement (CBA) governing this classification and rate.

Survey Rate Identifiers

Classifications listed under the "SU" identifier indicate that no one rate prevailed for this classification in the survey and the published rate is derived by computing a weighted average rate based on all the rates reported in the survey for that classification. As this weighted average rate includes all rates reported in the survey, it may include both union and non-union rates. Example: SULA2012-007 5/13/2014. SU indicates the rates are survey rates based on a weighted average calculation of rates and are not majority rates. LA indicates the State of Louisiana. 2012 is the year of survey on which these classifications and rates are based. The next number, 007 in the example, is an internal number used in producing the wage determination. 5/13/2014 indicates the survey completion date for the classifications and rates under that identifier.

Survey wage rates are not updated and remain in effect until a new survey is conducted.

Union Average Rate Identifiers

Classification(s) listed under the UAVG identifier indicate that no single majority rate prevailed for those classifications; however, 100% of the data reported for the classifications was union data. EXAMPLE: UAVG-OH-0010 08/29/2014. UAVG indicates that the rate is a weighted union average rate. OH indicates the state. The next number, 0010 in the example, is an internal number used in producing the wage determination. 08/29/2014 indicates the survey completion date for the classifications and rates under that identifier.

A UAVG rate will be updated once a year, usually in January of each year, to reflect a weighted average of the current negotiated/CBA rate of the union locals from which the rate is based.

WAGE DETERMINATION APPEALS PROCESS

1.) Has there been an initial decision in the matter? This can be:

* an existing published wage determination
* a survey underlying a wage determination
* a Wage and Hour Division letter setting forth a position on a wage determination matter
* a conformance (additional classification and rate) ruling

On survey related matters, initial contact, including requests for summaries of surveys, should be with the Wage and Hour Regional Office for the area in which the survey was conducted because those Regional Offices have responsibility for the Davis-Bacon survey program. If the response from this initial contact is not satisfactory, then the process described in 2.) and 3.) should be followed.

With regard to any other matter not yet ripe for the formal process described here, initial contact should be with the Branch of Construction Wage Determinations. Write to:

Branch of Construction Wage Determinations
Wage and Hour Division
U.S. Department of Labor
200 Constitution Avenue, N.W.
Washington, DC 20210

2.) If the answer to the question in 1.) is yes, then an interested party (those affected by the action) can request review and reconsideration from the Wage and Hour Administrator (See 29 CFR Part 1.8 and 29 CFR Part 7). Write to:

Wage and Hour Administrator
U.S. Department of Labor
200 Constitution Avenue, N.W.
Washington, DC 20210

The request should be accompanied by a full statement of the interested party's position and by any information (wage payment data, project description, area practice material, etc.) that the requestor considers relevant to the issue.

3.) If the decision of the Administrator is not favorable, an interested party may appeal directly to the Administrative Review Board (formerly the Wage Appeals Board). Write to:

Administrative Review Board
U.S. Department of Labor
200 Constitution Avenue, N.W.
Washington, DC 20210

4.) All decisions by the Administrative Review Board are final.

==========

END OF GENERAL DECISION

EP7 - PAGES

GAS COST SHARING (EP-7) STANDARD SPECIFICATIONS

NOTICE

THE PAGES CONTAINED IN THIS SECTION (EP7-PAGES) REPRESENT THE GAS COST SHARING WORK THAT SHALL APPLY TO AND BECOME A PART OF THE CONTRACT.

(NO TEXT ON THIS PAGE)

TABLE OF CONTENT

I - NOTICE TO ALL BIDDERS; GAS COST SHARING WORK

II - GENERAL PROVISIONS; GAS COST SHARING WORK

1. General
2. Gas Interferences And Accommodations
   2a. Water Main Accommodations
   2b. Sewer Accommodations
3. Quantity Overruns, EP-7 Funded Bid Items
4. Changes And Extra Work
5. Excavation
6. Backfilling And Street Restoration
7. Non-Responsive Bids
8. Minimum Clearances
9. Work By Facility Operator
10. Materials Furnished By Facility Operator
11. Liability And Insurance
12. Width And Depth Of Excavation
13. Depth And Crossing Angles Of Gas Facilities
14. Maintenance Of Traffic For Gas Work
15. Relocated Gas And Temporary Systems Installation
16. Role Of Company Inspector
17. Coordination With Gas Company

III - TECHNICAL SECTION

SECTION 6.01 - Trench Crossings; Support And Protection Of Gas Facilities And Services.
SECTION 6.02 - Extra Excavation For The Installation Of Catch Basin Sewer Drain Pipes With Gas Interferences.
SECTION 6.02.1 - Extra Excavation For The Installation Of Catch Basin Sewer Drain Pipes With Upstream Inverts Greater Than Six (6) Feet.
SECTION 6.03 - Removal Of Abandoned Gas Facilities. All Sizes.
SECTION 6.03.1 - Removal Of Abandoned Gas Facilities With Possible Coal Tar Wrap. All Sizes. (For National Grid Work Only)
SECTION 6.03.1a - Removal Of Abandoned Gas Facilities With Possible Coal Tar Wrap. All Sizes. (For Con Edison Work Only)
SECTION 6.04 - Adjust Hardware To Grade Using Spacer Rings/Adaptors. (Street Repaving.)
SECTION 6.05 - Adjust Hardware To Grade By Resetting. (Road Reconstruction.)
SECTION 6.06 - Special Care Excavation And Backfilling.
SECTION 6.07 - Test Pits For Gas Facilities.
SECTION 6.09 - Trench Excavation and Backfill for New Gas Mains and Services (For National Grid Work Only)
SECTION 6.09a - Trench Excavation and Backfill for New Gas Mains and Services (For Con Edison Work Only)

IV - STANDARD SKETCHES; GAS COST SHARING WORK

NO. 1 - Support Requirements For Gas Mains And Services Crossing Excavation Greater Than 4'-0" Wide At Any Angle
NO. 1A - Support Requirements For Gas Mains Over 16" Diameter Up To And Including 48" Diameter Crossing Excavation At Any Angle
NO. 2 - Typical Methods Of Measurement For Gas Crossings
NO. 3 - Utility Crossings During Catch Basin Chute Connection Pipe Installation
NO. 4 - Utility Crossings During Catch Basin Chute Connection Pipe Installation (Extra Depth)
NO. 5 - Gas Main Encroachment On And/Or Parallel To Excavation Of Unsheeted Trench

V - PRELIMINARY GAS WORK TO BE PERFORMED BY FACILITY OPERATOR

VI - LISTING OF APPROXIMATE LOCATIONS OF EP-7 BID ITEMS QUANTITIES

I - NOTICE TO ALL BIDDERS; GAS COST SHARING WORK

All prospective bidders are hereby advised that, pursuant to the "Gas Facility Cost Allocation Act", ("the Act"), the City of New York has entered into an agreement ("the Agreement") with the gas companies (Con Edison or National Grid (formerly KeySpan Energy Delivery)) operating in their respective areas of the City to "share" the cost of facility relocation and/or support and protection of facilities disturbed by proposed water and/or sewer and related City work specified in this contract. Therefore, bid items, specifications and estimated quantities for the incremental costs of support and protection of certain gas facilities have been included in this contract. The low bid for this contract shall be determined by examining each bid for all work to be performed under this contract including any work of support and protection of gas facilities to be performed. The Contractor shall not seek additional compensation from gas companies except as specifically set forth in its contract.

II - GENERAL PROVISIONS; GAS COST SHARING WORK

1. General:

The Contractor shall perform City work with interferences from existing live and abandoned gas facilities. This shall be defined as utility work. Therefore, this contract includes bid items, specifications and estimated quantities designed to fully compensate him/her for the incremental costs of supporting, protecting, providing accommodations and, avoiding disturbing gas facilities located in the streets shown on the contract drawings. In the event that any other provisions of this contract related to gas facilities (or private utilities) conflict with these provisions, these provisions shall supersede and govern all work related to gas facilities owned by the companies operating in the project area. All utility work, as defined in these specifications, including changes and additions thereto shall be paid solely by the City except when specified otherwise in this contract. Contractor hereby agrees that the facility operator shall not be liable to pay him/her for any work performed including extra utility work. Contractor agrees that its bid prices include all compensation for loss of productivity and efficiency, idle time, delays (including any delays occasioned by negotiation of a contract change), change in operations, mobilization, demobilization, remobilization, added cost or expense, lost of profit, other damages or impact costs that may be suffered by or because of utility work, or the presence of gas facilities in the proximity of City work and that it will not seek additional compensation for these items. All disputes shall be resolved as specified in the contract.

Pursuant to the Act, Agreement, and the New York City Administrative Code, the gas company(ies) has been directed by the Commissioner and is required to perform all maintenance, repairs, replacement, shifting, alteration, relocation, and/or removal work that are not part of this contract. By having bid on this contract, the Contractor understands and agrees that the Commissioner has preasserted any right the City has to require, including the issuance of any directives or so called "order outs" under the New York City Administrative Code, any or all gas companies to maintain, repair, replace, protect, support, shift, alter, relocate, and/or remove all gas facilities that are about to be disturbed by the City contract work. The issuance of additional such directives during the performance of the contract work, where necessary in the sole judgment of the Commissioner, shall be initiated by such Commissioner as set forth in the relevant sections of the Act and Agreement. Contractor further agrees to insert such requirements as set forth herein above into any contracts with its approved subcontractors so that its subcontractors also understand and agree to such contract requirements.

2. Gas Interferences And Accommodations:

During the performance of sewer and water main work funded by the New York City Department of Environmental Protection (NYCDEP), as instructed by the Engineer, the use of any applicable contract bid item is allowed in order to resolve and accommodate all gas facilities interferences with such City work, including the removal of contaminated soil in associated trench excavation. This is in addition to the specified EP-7 bid items in the contract. Payment for such accommodation shall be funded by EP-7 bid item "UTL-GCS-2WS - GAS INTERFERENCES AND ACCOMMODATIONS" (F.S. Fixed Sum). The value of such accommodation shall be computed by multiplying the appropriate unit prices bid to the quantity of work performed, as determined by the Engineer, and applying the total amount thus to be paid

to EP-7 bid item "UTL-GCS-2WS - GAS INTERFERENCES AND ACCOMMODATIONS". When EP-7 bid item "UTL-GCS-2WS - GAS INTERFERENCES AND ACCOMMODATIONS" does not exist, such additional accommodation work shall be at no cost to the City but shall be a matter of adjustment between gas facility operator and Contractor. Private facilities, other than gas, that become in interference due to gas interferences accommodations shall also be accommodated, if so directed by the Resident Engineer, at no additional cost to the City and, provided that its owner agrees to be responsible for all additional costs to Contractor, otherwise, such facility shall be ordered by the City to be maintained, shifted, relocated or replaced by its owner at his/her expenses.

2a. Water Main Accommodations:

When water main construction is to be performed in this contract, Contractor shall be required, if warranted by field conditions, and at locations designated by the Resident or Borough Engineer, to change the vertical or horizontal alignment of water mains including but not limited to all additional labor, material, work method accommodations, furnishing, delivering and laying offset fittings and pipes, etc., necessary in order to complete water main installation and, avoid gas interferences in the project area, including street intersections. Typical work method accommodations shall include, but not be limited to, pier and plate, installation of filter fabric and select fill, etc. Such work shall be performed as directed by the Engineer and in accordance with contract specifications and latest edition of water mains standards and specifications.

2b.Sewer Accommodations:

When sewer construction is to be performed in this contract, Contractor shall be required, if warranted by field conditions, and at locations designated by the Resident or Borough Engineer, to change the horizontal alignment of sewer facilities (if possible) including but not limited to all additional labor, material, work method accommodations, furnishing, delivering and construction of additional manholes or modification of manholes/catch basins, extending chute connections, house connections, using alternate materials and methods, poured-in-place structures, etc., necessary in order to complete sewer installation and, avoid gas interferences in the project area, including street intersections. The term sewer facility shall include, but not be limited to, all sewer pipe and appurtenances, manholes, catch basins, catch basin chutes, etc. Such work shall be performed as directed by the Engineer and in accordance with contract specifications and latest edition of sewer standards and specifications.

3. Quantity Overruns, EP-7 Funded Bid Items:

No quantity overrun, in excess of one hundred twenty five (125) percent, shall be permitted for EP-7 funded bid items (gas) included in this contract, except when Resident Engineer determines that such overruns are caused by field modifications to planned City work, or approved construction methods, or contract scope changes. Overruns not paid by City shall be negotiated and paid to Contractor by gas facility operator who then shall be entitled to reimbursement by NYCDEP under established cost sharing procedures.

4. Changes And Extra Work:

This section is not applicable to work defined under "Emergency Reconstruction Contracts" or so-called "Where and When Contracts" since these projects, by definition, inherently encounter unanticipated gas facilities and cannot be pre-engineered. In all other cases, any contract changes proposed for City work shall also cover and include all associated changes to support and protection of gas facilities affected by such changes to City work. In all other cases where the Contractor finds that City work cannot be performed as planned and specified and/or, as approved because of a need to support, protect and/or alleviate interferences from gas facilities that were not listed and/or shown, or incorrectly shown in contract plans and specifications, he shall immediately notify the Resident Engineer and the facility operators' representative of his findings. Resident Engineer shall promptly examine such claims and determine whether or not such work is covered by contract bid items and /or specifications (contract bid items and specifications shall include city contract items as well as EP-7 items). The Resident Engineer shall also

examine the claim to determine if the application of EP-7 bid item "UTL-GCS-2WS - GAS INTERFERENCES AND ACCOMMODATIONS" is appropriate to resolve the claim. If upon examination, the Engineer determines that such field conditions were unanticipated (not shown and/or listed, or incorrectly shown in contract documents) and are not covered by bid items and contract specifications, he shall then direct the Contractor and the affected facility operator to negotiate the cost of supporting and protecting, and/or alleviating the impact on City work caused by such unanticipated gas facilities with each other with the understanding that the performance of City work shall continue during negotiations. If a cost agreement is reached, the Contractor and facility operator shall adjust such costs between themselves at no additional costs to the City contract. If the Contractor and affected facility operator do not reach an agreement concerning the price to be paid for the extra work within five (5) business days of the Engineer's directive to engage into such negotiations and, after considering: public safety and inconvenience, requirements of laws and regulations applicable to private utilities, integrity of all utility systems, including but not limited to sewer and water, gas, electric, telephone and, cable TV facilities, sound engineering practices, cost (long and short term) to all affected parties, and potential City work delays, then the Resident Engineer, depending on nature and severity of interferences with City work, shall either, direct the facility operator to relocate or replace its facilities at its own discretion and cost, reimbursable by NYCDEP under established gas cost sharing procedures or, direct the Contractor to perform the utility work on actual time, material and equipment costs basis pursuant to relevant contract requirements and amendments. Contract bid prices for any applicable items of work involved shall be applied, or converted to an allowance for time and material charges. Changes shall be for affected portions of utility work and, shall be processed with EP-7 funds.

5. Excavation:

All excavators shall notify the NYC/LI One Call Center at 1-800-272-4480 at least two (2) working days, not including the day of the call, but not more than ten (10) working days in advance of the start of any excavation work. The gas company(ies) will mark out its facilities within the project limits and provide Construction Inspector(s) during all excavation work in close proximity (within twelve (12) inches) to gas facilities. The Contractor shall exercise extreme caution when excavating in the vicinity of any gas facilities. Hand excavation shall be performed within twelve (12) inches of gas facilities. The Contractor prior to excavating underneath these facilities shall adequately support all gas facilities. Standard support details for gas facilities have been included in the specifications. Any damage to gas facilities shall be reported immediately to the gas company(ies). The Contractor shall be responsible for all cost associated with repairs made necessary by damages caused by his operations.

6. Backfilling And Street Restoration:

Backfilling operations and street restorations shall be in accordance with contract requirements.

7. Non-Responsive Bids:

Every gas (EP-7) bid item has a suggested "Not less than" value per unit indicated on contract bid sheet. Bids resulting in cost of less than suggested for EP-7 items are hereby prohibited and if submitted shall be considered NON-RESPONSIVE.

8. Minimum Clearances:

Clearance requirements for City work shall govern and supersede any clearance requirement of gas facility operator. Therefore, a minimum of twelve (12) inches clearance between private utilities and City water mains, sewers or related structures to be installed in this contract shall be maintained. When this clearance is not attainable, the Resident Engineer may allow a minimum of four (4) inches clearance. With less than twelve (12) inches clearance a neoprene/polyethylene shield (to be provided by facility operator) shall be installed as part of all work item specifications. However, if Resident Engineer determines that City work cannot be performed within allowable clearance and no reasonable City accommodation (no-cost change to City work) is possible, the City shall direct the facility operator to remove, relocate, shift, or alter their facility(ies) pursuant to the New York City Administrative Code.

9. Work By Facility Operator:

The facility operator may find it necessary to perform the following types of work during performance of City work: accommodating a contractor's request for gas facilities modifications (in order to facilitate City contractor's proposed construction method) or, remedial and emergency work on gas facilities proper with their own resources and materials if an approved method of construction for City work causes unanticipated disturbances to gas facilities or, replacing defective gas facilities when they are exposed by the Contractor and their actual conditions are observable by the facility operator. Also included in the above category of defective gas facilities are: the presence of environmental contaminants attributable to the gas facility in or around gas facilities. If such work is deemed required by the facility operator or if facility operator is directed by the City to address such deficiencies at any time during the course of construction, the Contractor shall modify the construction schedule at no cost to the City and allow the facility operator five (5) business days to perform such work without interferences. Additional costs to the facility operator (in cases of accommodations) or, Contractor (in cases of defective gas facilities) due to such gas work, if any, shall be the responsibility of the parties involved and not of the City. Such costs shall be a matter of adjustment between the Contractor and the facility operator.

10. Materials Furnished By Facility Operator:

It shall be the Contractor's responsibility to inspect material to be installed by him immediately upon delivery and advise the facility operator through its authorized representative, of all damaged materials. The Contractor at no additional costs to the City or the facility operator shall replace any material that is damaged or lost after the Contractor's inspection.

11. Liability And Insurance:

Notwithstanding the provisions of this contract, the existing division of liabilities to third parties shall remain the same as between the City and the company. Therefore, it is specifically agreed by the City, company and Contractor (by bidding on this contract) that for the purpose of any liabilities to third parties, that the City contractor performing work directly and physically relating to gas company facilities in this project, shall be deemed an agent of the company and not an agent of the City, the New York City Municipal Water Finance Authority, or the New York City Water Board. Contractor shall include the company as an additional insured on all insurance policies maintained to comply with the City's insurance requirements.

12. Width And Depth Of Excavation:

Contractor shall not be authorized to deliberately change trench or excavation widths and/or depth specified without Engineer's approval. Enlargement of any side of excavation up to eighteen (18) inches beyond pay limits (or inside face of sheeting) requested by the Contractor for the installation of certain types of sheeting may be granted. However, such enlargements or those greater than allowable shall not be approved when, in the sole judgment of the City, field conditions allow the water mains and sewer work to be performed within the limits specified and, the sole purpose of such enlargement request is to impact adjacent utilities (public or private) whose support and protection are part of this contract. Any approval shall be given at no additional cost to the City contract, including EP-7 funding, and all costs associated with unauthorized enlargements shall be the sole responsibility of the Contractor.

13. Depth And Crossing Angles Of Gas Facilities:

Where gas facilities are shown (or specified as) crossing proposed alignment of sewers, water mains, catch basins and chute connections or any other proposed excavations at specific angles (as measured off plans or sketches or specified in contract), it shall be understood that actual field measurements may deviate (plus or minus) forty-five (45) degrees from those shown or specified. The cover, or depth from street surface to top of facilities, shall be as shown or specified in contract documents, no deviation is to be assumed. Where gas facilities are not shown on contract documents, but their support and protection are otherwise included in this contract then, all references to facilities crossing at "various angles and depth" in the gas sections shall mean that such facilities are crossing sewer, water, catch basin and, catch basin chute, and other excavations at a ninety (90) degree angle to the proposed sheeting line or side of

excavation (for unsheeted trenches) with an allowable deviation of forty-five (45) degrees in any direction, except for catch basin chute excavation where the allowable deviation shall be sixty (60) degrees. Where the cover is not noted or specified, the bottom face of such facilities shall be assumed to be crossing catch basin chutes at a depth of three (3) foot eight (8) inches or less from the street surface. Paragraph No. 2 above shall apply in cases of distribution water main construction. Appropriate bid items and specifications are provided for cases where angle and depth are greater than stated above. This section also applies to work defined in "Emergency Reconstruction Contracts" or so-called "Where and When Contracts". These contracts are not pre-engineered and consequently have no drawings, sketches or determined locations and so, gas facilities encountered will be crossing existing and proposed sewer, water, catch basin/catch basin chutes and all appurtenances at various angles and depths.

14. Maintenance Of Traffic For Gas Work:

All work pertaining to gas bid items and specifications shall be performed within the contract maintenance of traffic plan as specified in the contract document. The bid price for the Maintenance and Protection of Traffic shall cover all work pertaining to gas items. The City shall make compensation for additional maintenance and protection of traffic items in connection with gas item of work only when such additional work is deemed reasonable and necessary by the Resident Engineer and is approved by him prior to its performance.

15. Relocated Gas And Temporary Systems Installation:

In cases where the Contractor is allowed to select the location for temporary construction such as, installation of dewatering headers, wells, well points, etc., he shall not disturb any gas facilities shown on sketches provided in this section. The only exception shall be, if the affected gas company agrees to such relocation and provided that the cost of such relocation is a matter of adjustment between the company and Contractor, and at no cost to the City.

16. Role Of Company Inspector:

In any case in which the City elects to perform some or all support and protection work with its own employees, personnel or contractors, the facility operator shall provide onsite inspectors to approve and certify such support and protection work (exclusive of City accommodations) performed by the City's own employees, personnel, and contractors. Facility operator's inspectors are not authorized to direct City contractor during the performance of contract work. They shall act through the City Resident Engineer and provide him/her required approvals and certifications, prior to preparing partial payments of EP-7 items, in a format and frequency to be prescribed by the appropriate City Head of Construction.

17. Coordination With Gas Company:

The Contractor shall be required to notify the gas company(ies), in writing, at least two (2) weeks prior to the start of final paving in order to allow companies to complete any unfinished gas work located within the area to be paved. Every effort shall be made to maintain gas service with minimum inconvenience to the public.

III - TECHNICAL SECTION

SECTION 6.01 - Trench Crossings; Support And Protection Of Gas Facilities And Services.

1. Description:

Under this section, the Contractor shall provide all labor, materials, equipment, and incidentals required to

support and/or protect the integrity of gas mains, services and appurtenances of any sizes, configurations, and operating pressures crossing trench excavations above subgrade for planned construction of sewers and water mains facilities. A gas service shall be defined as a gas pipe of three (3) inches in diameter or less branching from the main to a customer pick up point or property valve box. A gas main may be any size pipe that is part of a distribution or transmission network other than services described above. Crossings shall be defined as gas facilities spanning the width of excavation (one side to the other side). These crossings may be at various angles and depth as shown on "Gas Cost Sharing Work Standard Sketches Nos. 1 and 1A", and as specified in "General Provisions; Gas Cost Sharing Work Paragraph No. 13" and, at the locations shown or listed in contract documents. The gas company operating in the area, (facility operator), owns these facilities. The work shall be performed in accordance with contract specifications, plans, and at the directions of the Resident Engineer in consultation with the authorized representatives of the facility operator.

2. Method Of Construction:

A. Protection: In general, the gas facilities shall be protected as required by New York State Industrial Code 753. In particular, the Contractor shall use hand excavation methods (pick and shovel or hand held power tools) directly below the pavement base to expose the gas facilities (marked out by facility operators) and to ascertain the clearances and cover of the facilities with respect to the proposed excavation. Upon exposing the affected facilities sufficiently, at the discretion of the Resident Engineer, to ascertain the foregoing, Contractor shall be permitted to proceed with a combination of hand and machine excavation, as appropriate, outside a zone of protection whose limit shall be defined as a perimeter located twelve (12) inches from the outside face of each gas facility crossings (See "Gas Cost Sharing Work Standard Sketch No. 2"). If the facilities are in direct interference with City work, meaning that "Minimum Clearances" described in "General Provisions; Gas Cost Sharing Work Paragraph No. 8" cannot be maintained, and excavation has to be temporarily or permanently abandoned then this particular location shall become a test pit and dealt with as specified in Section 6.07, and "General Provisions; Gas Cost Sharing Work Paragraphs Nos. 2 and 8".

B. Support: Gas mains or services crossing excavations equal or less than four (4) feet wide are generally self supporting, unless field conditions as determined by the Resident Engineer require otherwise. The support requirements for gas mains and services crossing excavations greater than four (4) feet wide shall be as shown on the attached "Gas Cost Sharing Work Standard Sketch No. 1" and Contractor shall use sheeting methods that permit the maintenance of gas facilities in their existing locations and configurations. Alternate methods equivalent to those shown on the sketch or accommodations by the facility operator proposed by the Contractor in order to facilitate the execution of the specified work shall be allowable, provided that prior approval is obtained by the Contractor from the Engineer and the facility operator. The support and protection of gas facilities crossings shown on plans, drawings, listings or otherwise identified in this contract shall not be circumvented with the issuance of so called "order outs".

3. Method Of Measurement:

The Contractor shall be paid for supporting and/or protecting gas facilities crossing trench excavations under the appropriate bid items covered by this section. The Contractor shall be directly responsible to the facility operator for the total cost of using any alternate method requiring the use of resources owned by the facility operator. Regardless of the method used, the City shall pay the bid price for the appropriate support and/or protect item of work. The average rate charged by the facility operator for alternate support and protection work such as, disconnecting and reconnecting gas services is listed in attached "Schedule GCS-A".

4. Payment Restrictions:

These items shall not be paid for: gas services crossing unsheeted water main trench excavation; abandoned gas main/services identified by facility operator; gas mains/services crossing trench excavations for fire hydrant branch connections pipes, catch basins and/or chutes (sewer drain pipe), house sewer and/or water services; gas facilities encroaching any face of excavation for sewer and/or

water construction, all of which are covered under other contract sections. Also this item shall not be paid for new gas mains and services crossing water trenches when trenching for such new facilities has been performed by the Contractor in common with trench excavation for City work (overlapping trench limits). The cost of supporting and protecting such gas facilities crossings shall be deemed included in the cost of trench excavation for the new gas facilities. This payment restriction shall apply even if such common trench gas excavation is not part of the contract. The prices bid for items covered by this section represent full compensation to Contractor to completely perform the work described. No other bid items shall be combined with these items in order to pay for gas main and/or services crossing excavations specified herein.

5. Method Of Payment:

Each (Ea.) gas facility crossing trench excavation as described in these specifications shall be counted for payment.

6. Price To Cover:

The cost of timber/steel supports installed for gas facilities shall be included in the bid price. The bid price for each crossing shall also cover all additional supervision, labor, material (except those provided by the facility operator), equipment and insurance necessary to completely maintain the gas facilities without disruption of service to the customers and in accordance with contract plans, specifications and facility operator standards. The price shall also include: changes of method of operations; sheeting modifications where necessary to accommodate the gas facilities crossings; installation and removal of water pipe under gas facilities (so called "snaking"); extra care during excavation (including hand excavation under existing single and multiple gas facilities); extra backfilling and compaction around, over and under gas facilities; installation and removal of sheeting around gas facilities; associated maintenance and protection of traffic; barricades; and traffic plates that may be required to temporarily close and/or complete the work.

SECTION 6.02 - Extra Excavation For The Installation Of Catch Basin Sewer Drain Pipes With Gas Interferences.

1. Description:

Under this item, the Contractor shall provide all labor, materials, equipment, insurance, and incidentals for the extra excavation associated with the installation of catch basin sewer drain pipes (chute) under gas facilities of various sizes crossing the trench excavation at various angles and depth at the locations shown in the contract documents and also, for the support and protection of these facilities during associated excavation and backfill operations. The gas company operating in the area, (facility operator), owns these facilities.

2. Method Of Measurement:

The bid price shall be per location (Each) where extra excavation is required when catch basin sewer drain pipes are installed at an upstream invert depth lower than four (4) feet (up to a maximum of six (6) feet) from the proposed pavement grade because the bottom faces of interfering gas mains and appurtenances are located at a depth greater than three (3) foot eight (8) inches from proposed pavement surface (See "Gas Cost Sharing Work Standard Sketch No. 4").

3. Method Of Construction:

Incremental cost responsibility for chute excavation is determined by the first private facility encountered starting from catch basin structure proper and that prevents the installation of the chute connection at an upstream cover less than or equal to three (3) feet or any other minimum cover required to avoid City facilities (e.g. water, sewer, etc.) as directed by the Resident Engineer.

4. Payment Restrictions:

This item shall not apply and related bid item shall not be paid in cases where:

A. Upstream invert chute is more than six (6) feet deep because of gas facilities.

B. Chute cannot be installed above existing gas facilities because of interferences with other private facilities that are not otherwise covered under this contract, regardless of upstream invert depth.

The above cases shall be at no cost to the City, but shall be a matter of adjustment between the Contractor and the facility operator(s).

5. Price To Cover:

The bid price shall cover the additional cost of all additional supervision, labor, materials, equipment and insurance, to complete the installation of catch basins and associated sewer connections in accordance with the contract plans and specifications. The price shall include: excavation by hand around and under single and multiple gas facilities; locating, supporting and protecting gas facilities; backfilling and all other items necessary to perform all work incidental thereto including: installation and removal of drain pipe under gas facilities ("snaking"); widening of trenches to facilitate the above work; subsequent additional backfill and pavement restoration; modifying precast catch basin window to accommodate connection; changing sheeting method and configuration to accommodate gas facility crossings; maintenance and protection of traffic; barricades; and installation of traffic plates that may be required to temporarily close and/or complete the work. The price shall not include removal of ledge rock and/or excavation of boulders in open cut.

SECTION 6.02.1 - Extra Excavation For The Installation Of Catch Basin Sewer Drain Pipes With Upstream Inverts Greater Than Six (6) Feet.

1. Description:

Under this item, the Contractor shall provide all labor, materials, equipment, insurance and incidentals for the extra excavation of catch basin chutes where the upstream invert is greater than six (6) feet under gas facilities of various sizes crossing the trench excavation at various angles and depth at the locations shown in the contract documents or as determined by field conditions and also, for the support and protection of these facilities during the associated excavation, sheeting and backfilling operations.

2. Method Of Measurement:

The bid price shall be per location (Each) where extra excavation and sheeting is required when the catch basin chute installed at an upstream invert depth lower than six (6) feet from the proposed pavement grade because the bottom faces of the interfering gas mains and appurtenances are located at a greater depth than three foot eight inches from the proposed pavement surface only.

3. Method Of Construction:

Incremental cost responsibility for chute excavation is determined by the first private facility encountered during such excavation when initiated from catch basin structure and that prevents the installation of the chute at an upstream cover less than or equal to three (3) feet or any other cover required to avoid City facilities as directed by the Resident Engineer.

4. Payment Restriction:

This item shall not apply and related bid item shall not be paid in cases where:
Upstream invert chute is less than or equal to six (6) feet deep because of gas facilities. Section 6.02 shall be paid.

5. Price To Cover:

The bid price shall cover the additional cost of all supervision, labor, materials, equipment and insurance to complete the installation of catch basin and associated sewer connections in accordance with the contract plans and specifications. The price shall include: excavation by hand around and under single and multiple gas facilities; locating, supporting and protecting gas facilities incidental thereto; widening of trenches to facilitate the above work; subsequent additional backfilling and pavement restoration; modifying pre-cast basin window to accommodate connection; the installation of catch basin with deeper sumps as specified; additional sheeting and changes in sheeting method and configuration to accommodate gas facility crossings; maintenance and protection of traffic; barricades; and installation of traffic plates that may be required to temporarily close and/or complete the work.

SECTION 6.03 - Removal Of Abandoned Gas Facilities. All Sizes.

1. Description:

Under this section the Contractor shall provide all labor, materials, equipment, insurance and, incidentals required for the removal of abandoned gas mains, services, or appurtenances thereof, located within the street shown on the contract plans, owned by gas company operating in the project area (facility operator), used or to be used for or in connection with or to facilitate the conveying, transportation, distribution or furnishing of gas (natural or manufactured or mixture of both) for light, heat, or power, but does not include property used solely for or in connection with business of selling, distributing or furnishing of gas in enclosed containers. Such removal shall include only abandoned gas facilities that interfere with (i.e. cause additional work) City work.

2. Determination Of Operating Status Of Gas Facilities:

The Contractor shall notify facility operator, as required by New York State Industrial Code 753. Gas facilities shall not be removed without the approval of the facility operator whose authorized representative shall certify in writing (specific facility or area wide facilities certification) and in a timely manner acceptable to the Resident Engineer that abandoned facilities are free of combustible gas and any other environmental contaminants prior to removal. The Resident Engineer shall rely on facility operator's certification. The facility operator may request the excavation of test pits (See Section 6.07) for this determination ahead of City work and, Contractor shall provide safe access, facilitate and permit facility operator to enter test pit excavations for the purpose of testing gas facilities to be removed by the Contractor. However, facility operator may prefer to make this test during performance of City work, in order to issue the above certification. This shall be permitted provided that it is agreed that additional costs, if any resulting from this choice shall be a matter of adjustment between the Contractor and facility operator only, and at no cost to the City.

3. Restrictions:

The facility operator shall be solely responsible for its contaminated gas facilities, surrounding contaminated soil and their disposal and abatement procedures, unless contract bid items are applicable and provided for such work. In such cases, the quantity removed shall be charged to EP-7 bid item "UTL-GCS-2WS - GAS INTERFERENCES AND ACCOMMODATIONS" at the City bid prices.

4. Method Of Measurement:

Abandoned gas pipeline removal shall be measured for payment per linear foot of pipe and appurtenances removed.

5. Price To Cover:

The price shall cover all additional cost of supervision, labor, materials, equipment, and insurance necessary to complete this work in accordance with the contract plans and specifications, including excavation by hand around and under other City and facility operator owned properties and, where necessary, support and protection of such properties. The price shall also cover breaking, cutting, and/or burning of abandoned gas pipes and their disposal from the site; sealing open ends remaining in the excavation with concrete or caps (caps to be provided by the facility operator) and backfilling of the area where the pipeline has been removed with clean backfill. The price shall also include any required dump charges. This item does not include any type of extra excavation, backfilling, compaction, pavement removal and restoration associated with abandoned gas facilities removal, all of which are covered under Section 6.06.

SECTION 6.03.1 - Removal Of Abandoned Gas Facilities With Possible Coal Tar Wrap. All Sizes. (For National Grid Work Only)

1. Description:

Under this section the Contractor shall provide all labor, materials, equipment, insurance and, incidentals required for the removal of abandoned gas mains, services or appurtenances thereof, located within the street shown on the contract plans, owned by the gas company operating in the project area (facility operator), used or to be used for or in connection with or to facilitate the conveying, transportation, distribution or furnishing of gas (natural or manufactured or mixture of both) for light, heat, or power, but does not include property used solely for or in connection with business of selling, distributing or furnishing of gas in enclosed containers. Such removal shall include only abandoned gas facilities that interfere with (i.e. cause additional work) City work. These gas facilities may be coated with Coal Tar Wrap and so, may require special handling and disposal methods as specified in National Grid Standard Operating Procedure 12-2, Coal Tar Wrap Handling and 12NYCRR56.

2. Determination Of Operating Status Of Gas Facilities:

The Contractor shall notify facility operator, as required by New York State Industrial Code 753. Gas facilities shall not be removed without the approval of the facility operator whose authorized representative shall certify in writing (specific facility or area wide facilities certification) and in a timely manner acceptable to the Resident Engineer that abandoned facilities are free of combustible gas and any other environmental contaminants prior to removal. The Resident Engineer shall rely on the facility operator's certification. The facility operator may request the excavation of test pits (See Section 6.07) for this determination ahead of City work and, the Contractor shall provide safe access, facilitate and permit facility operator to enter test pit excavations for the purpose of testing gas facilities to be removed by the Contractor. However, the facility operator may prefer to make this test during performance of City work, in order to issue the above certification. This shall be permitted provided that it is agreed that additional costs, if any, resulting from this choice shall be a matter of adjustment between the Contractor and the facility operator only, and at no cost to the City contract. Should such investigation result in the determination that the abandoned gas facilities do not contain Coal Tar Wrap then the removal of said facilities shall be covered under separate item (See Section 6.03).

3. Requirements:

The City Contractor shall excavate abandoned gas facility sufficiently, either in its entirety, or at locations determined by Contractor to allow the removal of Coal Tar Wrap (if present on the abandoned gas facility) and to facilitate the safe extraction of manageable lengths of abandoned pipe without damage to adjacent facilities, utilities or City structures either parallel to or crossing above or below abandoned gas facility. The Contractor is to allow access to the designated cutting points within the Contractor's trench by authorized National Grid personnel who will remove the Coal Tar Wrap as per National Grid procedures. This work by National Grid personnel shall be performed in a timely fashion and shall not unduly impede the Contractor's progress and/or productivity. Upon completion of the coating removal, the Contractor shall be allowed to cut, burn or grind the gas facility and remove the section of abandoned pipe. The

Contractor at a site designated by the Contractor shall stockpile the removed pipe. The facility operator will be responsible to provide trucking and disposal services with its own personnel and shall remove the stockpiled pipes during off hours or during such time as agreed to by the Contractor. Since the pipe removed will remain the property of the facility operator and is to be disposed of by the facility operator, the facility operator shall be responsible for any required notifications, filings, dump charges and incidentals associated with the disposal of abandoned gas facilities found to contain Coal Tar Wrap.

4. Method Of Measurement:

Abandoned gas pipeline removal shall be measured for payment per linear foot of pipe and appurtenances removed.

5. Price To Cover:

The price shall cover all additional cost of supervision, labor, materials, equipment and insurance necessary to complete this work in accordance with the contract plans and specifications, including excavation by hand around and under other City and facility operator owned properties and, where necessary, the support and protection of such properties. The cost shall also include hand excavation in the area(s) of proposed abandoned pipe cut(s), cutting and/or burning of abandoned gas pipes and stockpile of removed sections of abandoned pipe and associated maintenance and protection of traffic, blocking and temporary fencing if required. The unit price shall also cover sealing open ends remaining in the excavation with concrete or end caps (end caps to be provided by the facility operator) and backfilling of the area where the abandoned pipeline has been removed with clean backfill material. This item does not include any type of extra excavation, backfilling, compaction, pavement removal and/or restoration (temporary and permanent) associated with abandoned pipe removal ("lost trench"), all of which are covered under separate Section 6.06. The price shall also include allowance for any loss of productivity by the Contractor due to required facility operator work to remove pipe coating and prepare pipe for cutting as well as any change in Contractor's excavation method, additional trucking and/or stockpiling costs.

SECTION 6.03.1a - Removal Of Abandoned Gas Facilities With Possible Coal Tar Wrap. All Sizes. (For Con Edison Work Only)

1. Description:

Under this section the Contractor shall provide all labor, material, equipment, insurance and, incidentals required to prepare abandoned gas mains, services and appurtenances thereof located within the street shown on contract plans, owned by the gas company operating in the project area (facility operator), for removal due to interference with proposed City work. These abandoned gas facilities were, at one time, used for or in connection with or to facilitate the conveying, transportation, distribution or furnishing of gas (natural, manufactured or a combination of both) for light, heat, or power, but does not include property used solely for or in connection with business of selling, distribution or furnishing of gas in enclosed containers. Such preparation for removal shall include only abandoned gas facilities that interfere with (i.e. cause additional work) City work. These gas facilities may be coated with Coal Tar Wrap which may contain asbestos or PCB's and so, may require special handling and disposal methods as specified in Con Edison - ASBESTOS MANAGEMENT MANUAL, CHAPTER 6 - ASBESTOS WORK PROCEDURES, SECTION 06.04 - COAL TAR WRAP REMOVAL. For under 25' (feet) in length and an approved NYC-DEP variance for over 25' (feet).

2. Determination Of Operating Status Of Gas Facilities:

The Contractor shall notify facility operator, as required by New York State Industrial Code 753. Gas Facilities shall not be removed without the approval of the facility operator whose authorized representative shall certify in writing (specific facility or area wide facilities certification) and in a timely manner acceptable to the Resident Engineer that abandoned facilities are free of combustible gas and any other environmental contaminants prior to removal. The Resident Engineer shall rely on the facility

operator's certification. The facility operator may request the excavation of test pits (See Section 6.07) for this determination ahead of City work and Contractor shall provide safe access, facilitate and permit facility operator to enter test pit excavations for the purpose of testing gas facilities. However, the facility operator may prefer to make this test during performance of City work in order to issue the above certification. This shall be permitted provided that it is agreed that additional costs, if any, resulting from this choice shall be a matter of adjustment between the Contractor and the facility operator only, and at no cost the City contract. Should such investigation result in the determination that the abandoned gas facilities do not contain Coal Tar Warp then the removal of said facilities shall be covered under separate item (See Section 6.03).

3. Requirements:

The Contractor shall excavate abandoned gas facility sufficiently, either in it's entirety, or at locations determined by Contractor to allow the removal of Coal Tar Wrap (if present on the abandoned gas facility) and to facilitate the safe extraction of manageable lengths of abandoned pipe without damage to adjacent facilities, utilities or city structures either parallel to or crossing above or below abandoned gas facility. The Contractor is to allow access to the designated cutting points within the Contractors trench by authorized Con Edison personnel who will remove the Coal Tar Wrap as per Con Edison and/or NYC-DEP approved procedures. This access shall conform to all applicable codes, rules & regulations. This work by Con Edison personnel shall be performed in a timely fashion and shall not unduly impede the Contractors progress and/or productivity. Upon completion of the coating removal, the Contractor shall be allowed to cut, burn or grind the gas facility and remove the section of abandoned pipe. Contractor shall designate a specific site to stockpile those removed pipes. The facility operator will be responsible to provide trucking and disposal services with its own personnel and shall remove the stockpiled pipes during off hours or during such time as agreed to by the Contractor. Since the pipe removed will remain the property of the facility operator and is to be disposed of by the facility operator, the facility operator shall be responsible for any required notifications, filings, dump charges and incidentals associated with the disposal of abandoned gas facilities found to contain Coal Tar Wrap.

4. Method Of Measurement:

Abandoned gas facility removal shall be measured for payment per linear foot of pipe and appurtenances removed.

5. Price To Cover:

The price shall cover all additional cost of supervision, labor, materials, equipment and insurance necessary to complete this work in accordance with the plans and specifications, including, but not limited to, excavation by hand around and under other City and facility operator owned properties and, where necessary, the support and protection of such properties. The cost shall also include hand excavation in the area(s) of proposed abandoned pipe cut(s), cutting and/or burning of abandoned gas pipes and stockpile of removed sections of abandoned pipe and associated maintenance of traffic, blocking and temporary fencing if required. The unit price shall also cover sealing open ends remaining in the excavation with concrete or end caps (end caps to be supplied by facility operator) and backfilling of the area where the abandoned pipeline has been removed with clean backfill material. This item does not include any type of extra excavation, backfilling, compaction, pavement removal and/or restoration (temporary and permanent) associated with abandoned pipe removal ("lost trench"), all of which are covered under separate Section 6.06. The price shall also include allowance for any loss of productivity by the Contractor due to required facility operator work to remove pipe coating and prepare pipe for cutting as well as any change in Contractor excavation method, additional trucking and/or stockpiling costs.

SECTION 6.04 - Adjust Hardware To Grade Using Spacer Rings/Adaptors. (Street Repaving.)

1. Description:

Under this section, the Contractor shall provide all labor, supervision, materials, equipment, insurance and incidentals required to adjust to final grade gas street surface hardware located within the contract area boundaries shown on the plans. The gas company operating in the area, (facility operator), owns these facilities. The work shall be performed in accordance with the contract plans, specifications and at the directions of the Resident Engineer in concurrence with authorized representative of the facility operator.

2. Materials:

The facility operator shall furnish and deliver all prefabricated hardware parts required. These include adaptors for the grade adjustment proper and new street hardware if existing ones are found to be defective, all in accordance with the facility operator standards and City rules and regulations. The Contractor shall notify the facility operator of the installation schedule at least three (3) business days before materials are required on the site. Should the facility operator fail to deliver the necessary material according to any schedule mutually agreed upon by the Contractor and facility operator, the City shall not be responsible for any delays attributable thereto, nor for the failure of delivery of such materials. On project where material storage is not permitted on site, the facility operator shall deliver the required material to the Contractor's yard and it shall be the Contractor's responsibility to transport the material to the work site when needed for installation. It shall also be the Contractor's responsibility to inspect the materials to be installed by him immediately upon delivery and advise the facility operator through its authorized representative, of all damaged materials. The Contractor at no additional expense to the City or the facility operator shall replace any material that is damaged or lost after the Contractor's inspection.

3. Method Of Measurement:

The Contractor shall be paid for each six (6) inch round box and/or nine (9) inch square box adjusted to grade regardless of adjustment height requirements.

4. Price To Cover:

The unit price bid for this item shall include all additional labor, supervision, insurance, equipment and, material (except those to be provided by the facility operator), required to adjust each box to grade as required in the contract plans and specifications. The bid price shall also include the removal of existing frames and covers from existing facilities to be salvaged and returned to the facility operator and, all material transportation from the Contractor's material storage yard to the work site. In addition the bid price shall include "chipping" around existing box using appropriate means and methods where grinding is required.

SECTION 6.05 - Adjust Hardware To Grade By Resetting. (Road Reconstruction.)

1. Description:

Under this item, the Contractor shall provide all labor, supervision, materials, equipment, insurance and incidentals required to adjust to the proposed grade gas street surface hardware located within the contract area boundaries shown on the plans. The gas company operating in the area, (facility operator), owns these facilities. The work shall consist of either building up or lowering or resetting the casting by removing the existing frame and cover building up or decreasing the existing installation, replacing the frame and/or cover if damaged or worn out, as determined by the Resident Engineer, with a new frame and/or cover furnished by the owner, and setting the frame and cover to new elevation. The work shall be performed in accordance with the contract plans, specifications and at the directions of the Resident Engineer.

2. Materials:

The facility operator shall furnish and deliver all new hardware parts required. The Contractor shall furnish materials such as mortar, bricks and concrete in compliance with contract requirements. At locations

where high-early strength concrete is required under this contract to be placed adjacent to gas facilities, then the requirement for concrete shall be high-early strength complying with the current New York State Department of Transportation, Standard Specifications for Class F concrete. Existing castings may be replaced as required and deemed necessary by the Engineer and by City rules and regulations. The Contractor shall install the new castings of various sizes furnished by the facility operator. The Contractor shall notify the facility operator of the installation schedule at least three (3) business days before materials are required on the site and, shall provide off-loading services to the facility operator. Should the facility operator fail to deliver the necessary material according to any schedule mutually agreed upon by the Contractor and facility operator, the City shall not be responsible for any delays attributable thereto, nor for the failure of delivery of such materials. Such delays shall be a matter of adjustment between the Contractor and the facility operator. On project where material storage is not permitted on site, the facility operator shall deliver the required material to the Contractor's yard and it shall be the Contractor's responsibility to transport the material to the work site when needed for installation. It shall also be the Contractor's responsibility to inspect the materials to be installed by him, immediately upon delivery and advise the facility operator through its authorized representative, of all damaged materials. The Contractor at no additional expense to the City or the facility operator shall replace any material that is damaged or lost after the Contractor's inspection.

3. Methods Of Construction:

The Contractor shall remove and reinstall existing castings or install new castings to the proposed grade. Setting and resetting the castings shall be done with mortar and brick according to the standards of the facility operator. Work shall be performed in a workmanlike manner. Castings that are deemed unacceptable for resetting shall remain the property of the facility operator and he shall be responsible for their removal and proper disposal from site. No traffic shall be allowed on adjusted street hardware until permitted by the Engineer.

4. Method Of Measurement:

The Contractor shall be paid for each gas hardware adjusted to grade regardless of size or adjustment height requirements (up or down).

5. Price To Cover:

The unit price bid for this item shall include all additional labor, supervision, insurance, equipment and, material (except those to be provided by the facility operator), required to adjust each gas hardware to grade as required in the contract plans and specifications. The bid price shall also include the removal of existing frames and covers from existing facilities; building up the existing installations with bricks and mortar, or lowering the existing installation by removing bricks and mortar; replacing damaged frames and/or covers with new frames and/or covers furnished by the facility operator; setting the frames and covers to the new elevations; protect existing installations; repair minor structural damages to existing installations prior to resetting frames; unloading of furnished castings at the Contractor's yard and transporting castings from the Contractor's yard to the job site as required; completing the work in accordance with the contract plans, specifications and, at the directions of the Engineer. In addition the bid price shall include "chipping" around existing gas facilities using appropriate means and methods where grinding is required.

SECTION 6.06 - Special Care Excavation And Backfilling.

1. Description:

Under this section, the Contractor shall provide all labor, materials, equipment, insurance and incidentals required to support and protect the integrity of live gas facilities including mains, services, related structures and appurtenances during excavations. The gas company operating in the area, (facility operator), owns these facilities. The work shall be performed in accordance with the contract plans, specifications and at the directions of the Resident Engineer in consultation with authorized

representatives of the facility operator.

2. Applicability Of Section:

This section shall apply to live gas facilities of various sizes located within two (2) feet of any face of unsheeted excavation, (unsheeted excavation refers to any excavation performed for city work and includes excavations performed that are to be subsequently sheeted using approved methods) and paralleling or, encroaching any face of excavation. Also, for crossings greater than forty-five (45) degrees and/or located at a cover depth greater than five (5) feet from existing street surface. Parallel facilities are not exposed at any time during excavation (See "Gas Cost Sharing Work Standard Sketch No. 5"). Encroaching facilities are partially exposed inside the limit of excavation (See "Gas Cost Sharing Work Standard Sketch No. 5"). This section shall also apply to gas facilities crossing catch basins excavation, and catch basins sewer connections (chutes) trench excavation only when extra depth (covered in other section), is not required for chutes installations because of such utilities interferences (See "Gas Cost Sharing Work Standard Sketch No. 3"). This section shall also apply to gas services (if shown or otherwise listed in contract documents) crossing unsheeted excavations for water mains, gas facilities crossing fire hydrant branch connections, house sewer and/or water service connections excavations. This section shall also apply for so called "loss trench", as described further, and for additional excavation (pavement and/or soil), backfilling, compaction, roadway base and pavement restoration due to abandoned gas facilities, only if removed by Contractor. If operating status of gas facilities cannot be determined prior to excavation then such facilities shall be considered live and this section shall fully apply. The excavation around fully exposed live gas facilities along and within limits of excavation (not crossings) shall be covered by this section also (not shown on "Gas Cost Sharing Work Standard Sketch No. 5"), however the support requirement, if any is required, of such facilities is beyond the scope of these specifications and therefore shall be the responsibility of facility operator to determine and prescribe, at no cost to the City contract, but shall be a matter of adjustment between the Contractor and facility operator.

3. Payment Restriction:

No special care excavation shall be paid for abandoned gas facilities paralleling and/or encroaching excavation and therefore are not in direct interference with City work. Except as allowed in this section, the bid item specified under this section shall not be used in combination with items covered under other sections for work done due to a particular gas facility. This item shall not be paid for new gas facilities when trenching for such new facilities has been performed by the Contractor of record in common with trench excavation for City Work (overlapping trench limits). The cost of excavating with care as defined in this section shall be deemed included in the cost of trench excavation for the new gas facilities. This restriction shall apply even if such gas common trench excavation is not part of the contract. If facilities are in direct interference with City work, meaning that "Minimum Clearances" described in "General Provisions; Gas Cost Sharing Work Paragraph No. 8" cannot be maintained and excavation has to be temporarily or permanently abandoned then this particular location shall become a test pit and dealt with as specified in Section 6.07 and "General Provisions; Gas Cost Sharing Work Paragraphs Nos. 2 and 8".

4. Method Of Construction:

All excavation in the vicinity of gas facilities shall be as required by NYS Industrial Code 753. Where these facilities are paralleling and located two (2) feet or less from the limits of the proposed excavation, the Contractor shall use hand excavation methods (pick and shovel or hand held power tools) to ascertain the clearances of these facilities with respect to the proposed excavation. Once the location of these facilities with respect to the proposed excavation is verified to the satisfaction of the Resident Engineer, the Contractor shall then proceed with a combination of hand and machine excavation as required preserving the integrity of the facilities. The installation of timber supports or underpinning, when soil foundation cannot fully support partially exposed pipes, may be required to prevent pipe movement as directed by the Resident Engineer.

5. Method Of Payment:

The unit price for this work item shall be based on cubic yard (CY) of average excavation with care and, is

to be considered as an incremental cost for performing City work with gas facilities interferences.

6. Method Of Measurement:

A. For Paralleling Facilities: Volume calculated as: Depth as measured from existing street surface to the bottom of unsheeted trench excavation allowable by OSHA regulations, multiplied by, the width measured as one (1) foot from the face of excavation toward the center of excavation, multiplied by the length of parallel facility, divided by twenty-seven (27) cubic feet per cubic yard (See "Gas Cost Sharing Work Standard Sketch No. 5"). The gas facility is no longer considered to be in interference once sheeting has been installed, therefore no further compensation for paralleling facilities as described above will be made.

B. For Encroaching Facilities: Volume calculated as: Depth of trench as allowable by OSHA, maximum up to five (5) feet multiplied by, the width of partially exposed pipe plus one (1) foot, multiplied by the length of facility encroachment, divided by twenty-seven (27) cubic feet per cubic yard (See "Gas Cost Sharing Work Standard Sketch No. 5").

C. Fully Exposed Gas Facilities: (Not shown on "Gas Cost Sharing Work Standard Sketch No. 5") along and inside trench and/or crossing trench at an angle greater than forty-five (45) degrees and/or a cover depth greater than five (5) feet from the existing street surface. The volume shall be measured as the depth of trench excavation multiplied by the distance measured along the sheeting line between two (2) points of intersections of the gas facilities and the sides of trench excavation, multiplied by the width of trench excavation.

D. For Additional Excavation And Restoration Due To So Called "Loss Trench", When The Integrity Of Pavement And Soil Above And Around Existing Live Gas Facilities Cannot Be Maintained Due To Its Lack Of Cohesiveness: Volume shall be calculated as: Depth of unsheeted trench excavation multiplied by width measured as distance of facility from closest edge of unsheeted excavation plus, width of facility proper plus, one (1) foot or a maximum width of three (3) feet multiplied by length of facility fully exposed divided by, twenty-seven (27) cubic feet per cubic yard (not shown on "Gas Cost Sharing Work Standard Sketch No. 5").

E. For Facilities Crossing Excavation For Catch Basins, Or Chutes Installations (When NYCDEP Funded) Or Fire Hydrant Branch Connections, Or Unsheeted Water Main Trench, Or House Sewer And/Or Water Services: Volume calculated as: Depth as measured from existing street surface to the bottom of the trench excavation multiplied by, the width taken as the outside diameter of pipe or the width of structure plus one (1) foot on either side (two (2) feet), multiplied by, the length of exposed facility crossing the trench, divided by twenty-seven (27) cubic feet per cubic yard (not shown on "Gas Cost Sharing Work Standard Sketch No. 5").

Overlapping volume dimensions measured as described above may occur when multiple facilities are paralleling excavations, encroaching excavations or crossing catch basins and catch basin chute installations. In such cases, all such facilities shall be counted as one limited by the extreme pipes, faces (See "Gas Cost Sharing Work Standard Sketch No. 2"). The volume shall then be calculated as described above.

7. Price To Cover:

The bid price shall also cover all additional supervision, labor, material, equipment and insurance necessary to excavate while protecting and maintaining (excluding supports for fully exposed live gas) gas facilities without disruption of service to the public and in accordance with contract specifications. The price shall also include, changes of sheeting method and excavation width configuration where necessary to accommodate gas facilities in their existing locations; difficulties during the installation of catch basins, chute connections, hydrant branch, and house sewer and water connections under or over gas facilities; loss of productivity due to slower rate of excavation (special care) during excavation, including the use of such methods as: hand excavation around existing single and multiple facilities, extra excavation and backfilling due to lost trench because of existing and adjacent gas facilities, compaction, removal of

sheeting from the facilities, extra roadway base restoration and temporary pavement, associated maintenance and protection of traffic, barricades, and traffic plates that may be required to temporarily close and/or complete the work.

SECTION 6.07 - Test Pits For Gas Facilities.

1. Description:

Under this section, the Contractor shall furnish all labor, materials, insurance, equipment and appliances necessary to excavate, sheet and, maintain test pits at locations approved by the Resident Engineer in consultation with the facility operator. Test pits shall be dug in order to ascertain exact locations, cover and invert elevations, clearances, alignment and operating status (live or dead) of existing gas facilities. The Contractor shall inspect jointly with the Resident Engineer and facility operator, gas facilities and other structures uncovered, take all relevant measurements and elevations as directed by the Resident Engineer. Tests to determine operating status of gas facilities shall be performed by facility operator. The pits shall be covered with steel plates during daytime nonworking hours, and uncovered, as required, until the inspection work is completed. Testing of gas facilities may require a maximum of four (4) hours. Then, the pits shall be backfilled with clean fill, and resurfaced with temporary pavement. All traffic shall be maintained and all safety measures as stipulated shall be complied with.

2. Methods Of Construction:

A. Excavation: Existing pavement to be removed shall be neatly cut along lines of removal with a saw or other approved equipment which leaves a neat straight joint line along the juncture with subsequently replaced pavement. Excavation in the vicinity of utilities and other structures shall be performed using hand tools. Use of hand operated pneumatic and electric jackhammers will be permitted only for breaking pavement and removal of masonry, concrete and boulders, or as otherwise directed by the Resident Engineer. The Contractor shall properly dispose of all materials excavated from test pits away from site. Test pits shall be excavated at locations shown on the contract drawings or as directed by the Resident Engineer. Additional test pits may be required and shall be excavated where required, as ordered by the Resident Engineer. All test pits shall be excavated to a depth and size necessary to locate the existing facilities. Sheeting shall be used when depth of excavation exceeds five (5) feet. The sheeting required shall be furnished and installed in full compliance with the State of New York and Federal Safety Codes requirements and as specified in contract, whichever is more stringent. Care shall be taken that no existing gas facilities or other structures are broken or damaged. All broken or damaged facilities shall be reported immediately to facility operator who shall decide whether such facilities shall be repaired or replaced by company forces or by City contractor and in conformance with "General Provisions; Gas Cost Sharing Work Paragraph No. 9". Contractor shall excavate all material encountered, including large masses of concrete, cemented masonry and boulders, as directed by the Resident Engineer. Any type of excavation protection used, shall satisfy the following:

   (a) Industrial Code Rule 753.
   (b) Prevent injury to workers and the public, and avoid damage to existing water, sewer, and gas pipes or other structures, and to pavements and their foundations, through caving or sliding of the banks of the excavation.

   Should it become necessary, as determined by the Resident Engineer, to enlarge any test pit in any dimension after sheeting has been placed, the Contractor shall remove portions of the sheeting, as necessary, enlarge the test pits as directed, and replace the sheeting without additional compensation for this work other than for the additional volume of material excavated.

B. Maintenance Of Test Pits: Excavated test pits shall be maintained free of debris and kept dry by the Contractor in order to permit the inspection and measurements and to determine the locations of facilities. In order to accomplish this, Contractor shall, upon completion of excavation and placement of sheeting (if depth greater than five (5) feet), furnish and install adequate steel plates and posting

over the excavated pits and shall temporarily remove all equipment debris and workers, and relocate barricades in order to open the full width of street to traffic during nonworking hours. The Contractor shall then, at no additional cost, relocate such barricades, barrels, cones and other warning devices and remove steel plates, as and when directed by the Resident Engineer to facilitate the inspection of exposed facilities. When work is being performed and the pits are not covered with steel plates, the Contractor shall provide complete and safe access to the test pits as may be required, and he shall provide construction barricades and maintain traffic at all times as shown or as directed by the Resident Engineer. Upon completion of test pit inspection by the Resident Engineer, the pit shall be backfilled by the Contractor as specified in contract, except that backfill material shall conform to contract specifications for such purpose.

C. Pavement And Sidewalk Restoration: After backfilling is completed, the Contractor shall construct a temporary pavement consisting of a minimum of four (4) inches thick asphaltic concrete mixture in roadway areas or a two (2) inches thick asphaltic concrete mixture in sidewalk areas in order to maintain existing pedestrian and vehicular traffic. This temporary pavement shall be maintained until permanent pavement and sidewalk replacement is constructed as specified in contract.

3. Measurements:

The quantity to be measured for payment shall be the number of cubic yards of material removed from within the limits of the pit dimensions as directed by the Resident Engineer. The volume occupied by existing pipes or other structures remaining within the maximum payment lines will not be deducted from the total volume measured except, where the cross sectional area of these facilities exceeds four (4) square feet. As determined by the Resident Engineer, the quantity measured for payment may be proportionate to a fair and reasonable estimate of gas responsibility in the total volume excavated.

4. Price To Cover:

The contract price bid per cubic yard for test pits shall cover all additional costs of labor, material, insurance, equipment, appliances and incidentals required to excavate test pits, including removal and disposal of excavated materials, sheeting, steel plating, backfill, compaction and temporary pavement and sidewalk restoration all in accordance with the specifications and as directed by the Resident Engineer. The price shall also include the cost of providing safe access to the excavation by facility operator for the performance of certain test to determine operating status of gas facilities prior to City work. The price shall also include support and protection of all gas facilities crossing excavation, paralleling and/or encroaching any face of excavation.

SECTION 6.09 - Trench Excavation and Backfill for New Gas Mains and Services (For National Grid Work Only)

1. Description:

Under this section, the contractor shall furnish all labor, materials, equipment, insurance, permits and incidentals required to break/remove roadway and sidewalk pavement, excavate, backfill and restore gas trenches. The trench to be excavated shall be determined by the size of the gas facility to be installed. The work shall be performed in accordance with applicable specifications, and/or at the direction of the Resident Engineer in consultation with the facility operator.

2. Materials:

All materials used to excavate and prepare trenches shall be supplied by the Contractor and be approved by the facility operator in consultation with the Resident Engineer.

3. Method of Construction:

Excavation – The Contractor shall saw cut and/or break and remove existing roadway which may include

but is not limited to, asphalt, concrete and cobblestone, utilizing approved equipment that leaves a neat straight joint line along the juncture with subsequently replaced pavement. Prior to starting the trenching operation, the contractor shall excavate the appropriate gas main tie-in pits at the extremities of the gas main sections to be replaced. Test pits shall be excavated to determine exact location of all tie-in pits and at appropriate intervals along proposed trench excavation to verify lane and clearances as shown on the contract plans. The tie-in pits shall be adequately protected by the contractor using wood fencing or steel traffic plates until such time when the facility operator has completed the tie-in work. The Contractor shall be permitted to excavate utilizing a combination of machine and hand excavation, as field conditions warrant, and as directed by the facility operator. The trench shall be adjusted so as to provide for a nominal cover on the new gas facilities or as required based on field conditions, applicable specifications, or as directed by the facility operator in consultation with the Resident Engineer. The width of the trench shall be as directed by the facility operator in consultation of the Resident Engineer. The bottom of the trench shall be graded smooth with a minimum cushion of 3 inches of clean sand and in conformance with applicable specification and be compacted, to minimize initial settlement and to avoid "point" support of new gas facilities. All stones projecting into the trench bottom shall be removed, and the voids backfilled before the new gas facilities are installed. Where streets are not to final grade, the cover shall be measured from the final grade, or the existing grade, whichever provides the deeper trench. Excavation in the vicinity of utilities and other structures shall be performed using hand tools. The contractor shall properly dispose of all materials excavated away from site. Size and location of excavation shall be as directed by the facility operator in consultation with the Resident Engineer. Trenches shall be excavated to a depth and size necessary to facilitate the installation of the new gas facility and in conformance with the applicable specification. All existing facilities that are encountered during trench excavating shall be protected in a manner suitable to the facility operator in consultation with the Resident Engineer. Tight sheeting shall be used, as required, based on field conditions and/or when the depth of excavation is equal to or greater than five feet. Skeleton type sheeting will not be permitted. The sheeting required shall be furnished and installed in full compliance with the State of New York and Federal Safety Code requirements and in compliance with applicable specifications and/or as directed by the facility operator in consultation with the Resident Engineer. Care shall be taken that no existing gas facilities or other structures are broken or damaged. Contractor shall excavate all material encountered necessary to facilitate the installation of the new gas facilities, and as directed by the facility operator. Care should be taken to avoid damage to existing utility facilities and structures, and to pavements and their foundations, and to avoid caving or sliding banks within the excavation.

Maintenance of Trench Excavation - Excavated trenches shall be maintained free of debris and kept dry by the contractor. In order to accomplish this, contractor shall, upon completion of excavation and placement of sheeting (as required and/or if depth is equal to or greater than five feet), furnish and install adequate steel plates, as directed by the facility operator in consultation with the Resident Engineer, and posting over the excavated trenches and shall temporarily remove all equipment debris and workers, and relocate barricades in order to open the full width of street to traffic during non-working hours, as required based on DOT requirements. National Grid forces will perform all live gas main connections, dead gas main cut-outs, and/or service work associated with disconnecting and reconnecting from old to new gas main The Contractor shall then, at no additional cost, relocate such barricades barrels, cones and other warning devices and remove steel plates, as and when directed by the facility operator in consultation with the Resident Engineer to facilitate the installation of the new gas facilities. When work is being performed and the excavations are not covered with steel plates, the Contractor shall provide complete and safe access to the trench as may be required, and shall provide construction barricades and maintain traffic at all times as shown or as directed by the facility operator in consultation with the Resident Engineer. The contractor has the responsibility to maintain and set to grade all National Grid hardware during backfill and pavement restoration. Upon completion of installation of the new gas facility, the trench excavation shall be backfilled by the contractor in accordance with Contract requirements and all backfill material shall conform to contract specifications for such purpose.

Pavement and Sidewalk Restoration - After backfilling is completed, the contractor shall install temporary pavement consisting of six inches (6") thick asphaltic concrete mixture in roadway areas or a two inches (2") thick asphaltic concrete mixture in sidewalk areas in order to maintain existing pedestrian and vehicular traffic. This temporary pavement shall be maintained until permanent replacement as specified in contract. Permanent pavement restoration shall be as required by the appropriate contract

specifications and as directed by the Resident Engineer.

4. Method of Measurement:

The quantity to be measured for payment shall be the number of cubic yards (C.Y.) of trench actually excavated, including roadway pavement, base and/or sidewalk concrete removed within the limits of the trench as directed by the Resident Engineer in consultation with the facility operator. The volume occupied by existing pipes or other structures will be deducted from the total volume measured as shown on contract drawing(s) Title: EP-7 SECT. 6.09 GAS SPECIALTY CONTRACTOR WORK, or as encountered based on existing field conditions.

5. Price to Cover:

The unit price bid per cubic yard for excavation shall include the cost of all supervision, labor, material, equipment, insurance and incidentals necessary to complete excavation trenches, including backfill, compaction testing and restoration of trenches and tie-ins pits as specified or shown on the contract, plans. The bid price shall also include the cost of coordinating the sewer and water main work to be performed by the contractor with the gas installation work to be performed by others. The price shall also include, associated maintenance of traffic, and traffic plates and openings and closings of plates as may be required in order to provide access to the facility operator during the new gas facility installation, and installing, removing and maintaining tight sheeting that may be required, cut, break and remove various thickness of surface and base pavement, excavate by hand, furnish, place and compact, in compliance with DOT requirements, clean sand backfill following installation of the gas facility. Any required removing, trucking, storing, and disposing of material shall be deemed included in the unit price. The price shall also include the cost of providing temporary pavement restoration. Permanent pavement restoration shall be deemed included in this item, as required and as directed by the Resident Engineer.

SECTION 6.09a Trench Excavation and Backfill for New Gas Mains and Services (For Con Edison Work Only)

1. Description:

Under this section, the contractor shall furnish all labor, materials, equipment, insurance, permits and incidentals required to break/remove roadway and sidewalk pavement, excavate, backfill and restore gas trenches. The trench to be excavated shall be determined by the size of the gas facility to be installed. The work shall be performed in accordance with applicable specifications, and/or at the direction of the Resident Engineer in consultation with the facility operator.

2. Materials:

All materials used to excavate and prepare trenches shall be supplied by the Contractor and be approved by the facility operator in consultation with the Resident Engineer. Clean sand backfill material shall be used and shall conform to Con Edison specification EO-1181-rev.6, General Specification for Backfilling of Trench and Small Openings.

3. Method of Construction:

Excavation – The Contractor shall saw cut and/or break and remove existing roadway which may include but is not limited to, asphalt, concrete and cobblestone, utilizing approved equipment that leaves a neat straight joint line along the juncture with subsequently replaced pavement. Prior to starting the trenching operation, the contractor shall excavate the appropriate gas main tie-in pits at the extremities of the gas main sections to be replaced. Test pits shall be excavated to determine exact location of all tie-in pits and at appropriate intervals along proposed trench excavation to verify lane and clearances as shown on the contract plans. The tie-in pits shall be adequately protected by the contractor using wood fencing or steel traffic plates until such time when the facility operator has completed the tie-in work. The Contractor shall be permitted to excavate utilizing a combination of machine and hand excavation, as field conditions warrant, and as directed by the facility operator. The trench shall be adjusted so as to provide for a

nominal cover on the new gas facilities or as required based on field conditions, applicable specifications, or as directed by the facility operator in consultation with the Resident Engineer. The width of the trench shall be as directed by the facility operator in consultation of the Resident Engineer. The width and depth of the trench shall conform to Con Edison Gas Operations drawing 309495 rev. 4, Trench Excavation for Gas Mains Up to 350 PSIG, or as directed by the facility operator in consultation of the Resident Engineer. The bottom of the trench shall be graded smooth with a minimum cushion of 3 inches of clean sand and in conformance with applicable specification and be compacted, to minimize initial settlement and to avoid "point" support of new gas facilities. All stones projecting into the trench bottom shall be removed, and the voids backfilled before the new gas facilities are installed. Where streets are not to final grade, the cover shall be measured from the final grade, or the existing grade, whichever provides the deeper trench. Excavation in the vicinity of utilities and other structures shall be performed using hand tools. The contractor shall properly dispose of all materials excavated away from site. Size and location of excavation shall be as directed by the facility operator in consultation with the Resident Engineer. Trenches shall be excavated to a depth and size necessary to facilitate the installation of the new gas facility and in conformance with the applicable specification. All existing facilities that are encountered during trench excavating shall be protected in a manner suitable to the facility operator in consultation with the Resident Engineer. Tight sheeting shall be used, as required, based on field conditions and/or when the depth of excavation is equal to or greater than five feet. Skeleton type sheeting will not be permitted. The sheeting required shall be furnished and installed in full compliance with the State of New York and Federal Safety Code requirements and in compliance with applicable specifications and/or as directed by the facility operator in consultation with the Resident Engineer. Care shall be taken that no existing gas facilities or other structures are broken or damaged. Contractor shall excavate all material encountered necessary to facilitate the installation of the new gas facilities, and as directed by the facility operator. Care should be taken to avoid damage to existing utility facilities and structures, and to pavements and their foundations, and to avoid caving or sliding banks within the excavation.

Maintenance of Trench Excavation - Excavated trenches shall be maintained free of debris and kept dry by the contractor. In order to accomplish this, contractor shall, upon completion of excavation and placement of sheeting (as required and/or if depth is equal to or greater than five feet), furnish and install adequate steel plates, as directed by the facility operator in consultation with the Resident Engineer, and posting over the excavated trenches and shall temporarily remove all equipment debris and workers, and relocate barricades in order to open the full width of street to traffic during non-working hours, as required based on DOT requirements. Con Edison forces will perform all live gas main connections, dead gas main cut-outs, and/or service work associated with disconnecting and reconnecting from old to new gas main The Contractor shall then, at no additional cost, relocate such barricades barrels, cones and other warning devices and remove steel plates, as and when directed by the facility operator in consultation with the Resident Engineer to facilitate the installation of the new gas facilities. When work is being performed and the excavations are not covered with steel plates, the Contractor shall provide complete and safe access to the trench as may be required, and shall provide construction barricades and maintain traffic at all times as shown or as directed by the facility operator in consultation with the Resident Engineer. The contractor has the responsibility to maintain and set to grade all Con Edison hardware during backfill and pavement restoration. Upon completion of installation of the new gas facility, the trench excavation shall be backfilled by the contractor in accordance with Contract requirements and all backfill material shall conform to contract specifications for such purpose.

Pavement and Sidewalk Restoration - After backfilling is completed, the contractor shall install temporary pavement consisting of six inches (6") thick asphaltic concrete mixture in roadway areas or a two inches (2") thick asphaltic concrete mixture in sidewalk areas in order to maintain existing pedestrian and vehicular traffic. This temporary pavement shall be maintained until permanent replacement as specified in contract. Permanent pavement restoration shall be as required by the appropriate contract specifications and as directed by the Resident Engineer.

4. Method of Measurement:

The quantity to be measured for payment shall be the number of cubic yards (C.Y.) of trench actually excavated, including roadway pavement, base and/or sidewalk concrete removed within the limits of the trench as directed by the Resident Engineer in consultation with the facility operator. The volume occupied

by existing pipes or other structures will be deducted from the total volume measured as shown on contract drawing(s) Title: EP-7 SECT. 6.09 GAS SPECIALTY CONTRACTOR WORK, or as encountered based on existing field conditions.

5. Price to Cover:

The unit price bid per cubic yard for excavation shall include the cost of all supervision, labor, material, equipment, insurance and incidentals necessary to complete excavation trenches, including backfill, compaction testing and restoration of trenches and tie-ins pits as specified or shown on the contract, plans. The bid price shall also include the cost of coordinating the sewer and water main work to be performed by the contractor with the gas installation work to be performed by others. The price shall also include, associated maintenance of traffic, and traffic plates and openings and closings of plates as may be required in order to provide access to the facility operator during the new gas facility installation, and installing, removing and maintaining tight sheeting that may be required, cut, break and remove various thickness of surface and base pavement, excavate by hand, furnish, place and compact, in compliance with DOT requirements, clean sand backfill following installation of the gas facility. Any required removing, trucking, storing, and disposing of material shall be deemed included in the unit price. The price shall also include the cost of providing temporary pavement restoration. Permanent pavement restoration shall be deemed included in this item, as required and as directed by the Resident Engineer.

GAS COST SHARING STANDARD SPECIFICATIONS
SCHEDULE GCS-A

Average rate charged by utility companies to Disconnect and Reconnect Gas Services:

1. National Grid - $586.90 per Service/and Visit
2. Con Edison - $524.00 per Service/and Visit

IV - STANDARD SKETCHES; GAS COST SHARING WORK

Hereinafter attached are the following Standard Sketches for Gas Cost Sharing Work:

Sketch No. 1 - Support Requirements For Gas Mains And Services Crossing Excavation Greater Than 4' - 0" Wide At Any Angle

Sketch No. 1A - Support Requirements For Gas Mains Over 16" Diameter Up To And Including 48" Diameter Crossing Excavation At Any Angle

Sketch No. 2 - Typical Methods Of Measurement For Gas Crossings

Sketch No. 3 - Utility Crossings During Catch Basin Chute Connection Pipe Installation

Sketch No. 4 - Utility Crossings During Catch Basin Chute Connection Pipe Installation (Extra Depth)

Sketch No. 5 - Gas Main Encroachment On And/Or Parallel To Excavation Of Unsheeted Trench

GAS COST SHARING WORK (SKETCH NO. 1)

SUPPORT REQUIREMENTS FOR GAS MAINS AND SERVICES CROSSING EXCAVATION GREATER THAN 4'-0" WIDE AT ANY ANGLE

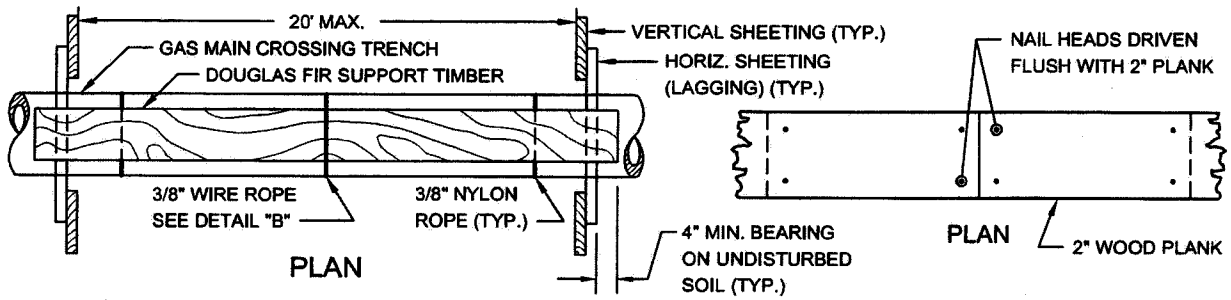

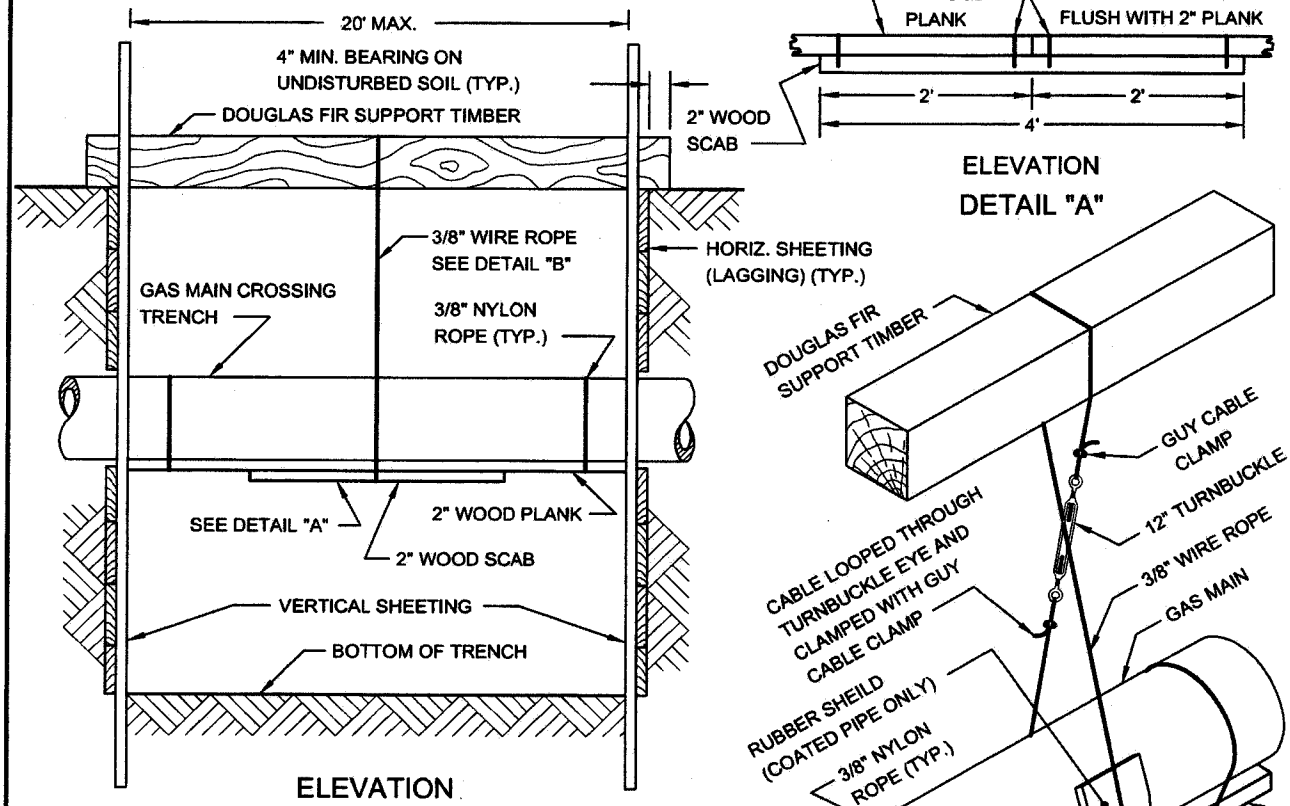

CABLE SUPPORT		TIMBER SUPPORT	
MAIN TYPE	SPACING	MAIN SIZE	TIMBER SIZE
CAST IRON	4' O.C. MAX.	UP TO 6"	6" X 6"
STEEL	10' O.C. MAX.	8" TO 10"	8" X 8"
PLASTIC	10' O.C. MAX.	12" TO 16"	10" X 10"

REVISED OCT. 2004 - L. ADRIEN
REVISED JUNE 1998 - J. WONG / W. PATALANOP. MOY

GAS COST SHARING WORK (SKETCH NO. 1A)

SUPPORT REQUIREMENTS FOR GAS MAINS OVER 16" DIAMETER UP TO AND INCLUDING 48" DIAMETER CROSSING EXCAVATION AT ANY ANGLE

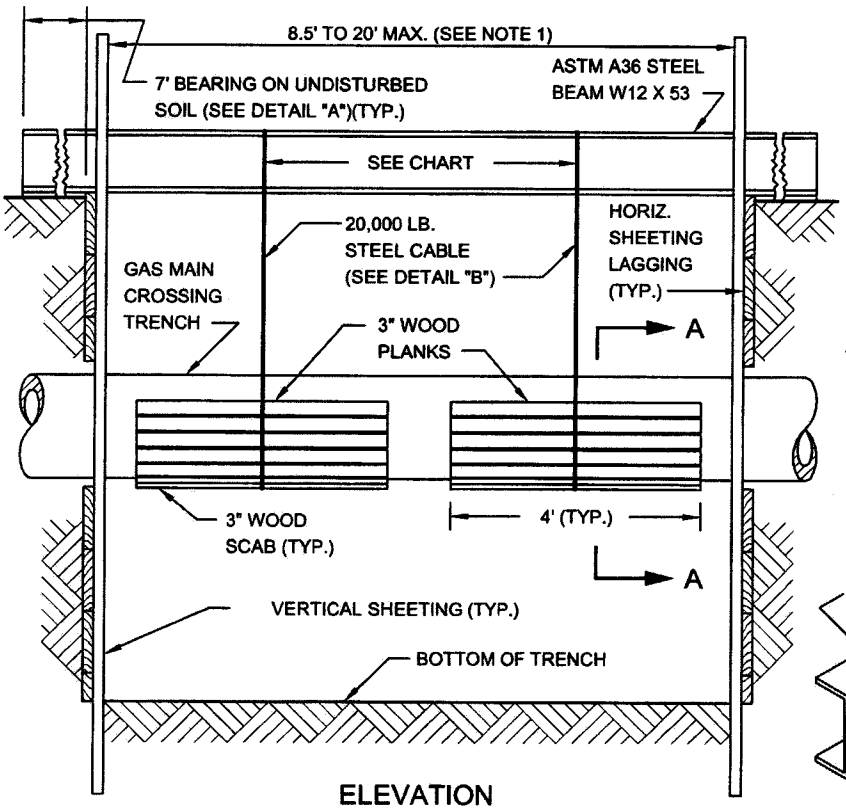

ELEVATION

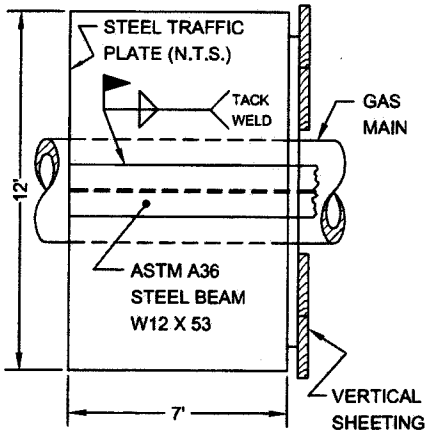

DETAIL "A"

CABLE SUPPORT	
MAIN TYPE	SPACING
CAST IRON	4' O.C. MAX.
STEEL	10' O.C. MAX.

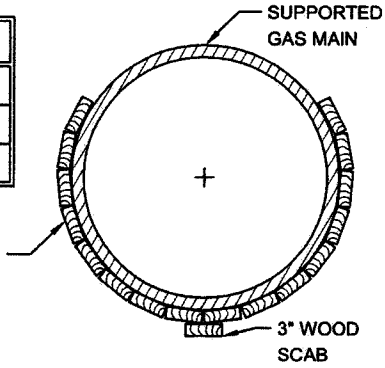

SECTION A-A

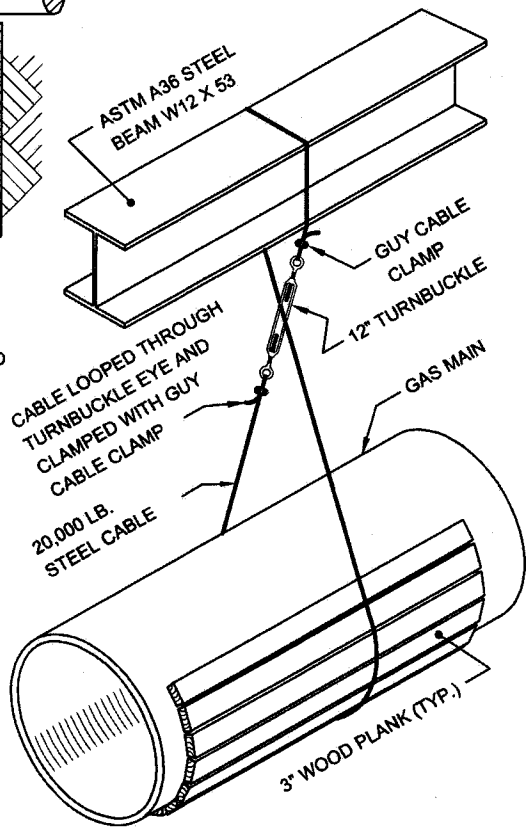

DETAIL "B"

NOTES:

(1) NO SUPPORT IS REQUIRED FOR GAS MAINS OVER 16" DIA. UP TO AND INCLUDING 48" DIA. CROSSING TRENCHES LESS THAN 8.5' WIDE.

(2) UNDERMINE A MAXIMUM OF 8.5 L.F. OF CAST IRON GAS MAIN AT A TIME.

(3) SET STEEL CABLE OVER 3" WOOD PROTECTIVE PLANKS AND PLACE AN ADDITIONAL 3" SCAB ON THE BOTTOM OF THE GAS MAIN.

(4) ADJUST STEEL CABLE UNTIL DEAD WEIGHT OF THE UNDERMINED GAS MAIN HAS BEEN TAKEN UP BY THE OVERHEAD STEEL BEAM SUPPORT.

(5) ALL SUPPORTS AND STEEL CABLES CAN BE REOMVED ONLY AFTER THE REQUIRED BACKFILL (AROUND AND BELOW GAS MAIN) HAS BEEN COMPACTED IN ACCORDANCE WITH NEW YORK CITY STANDARDS AND AT THE DIRECTIONS OF THE ENGINEER.

REVISED OCT. 2004 - L. ADRIEN
REVISED JUNE 1998 - J. WONG / W. PATALANOP, MOY

GAS COST SHARING WORK (SKETCH NO. 2)

TYPICAL METHODS OF MEASUREMENT FOR GAS CROSSINGS

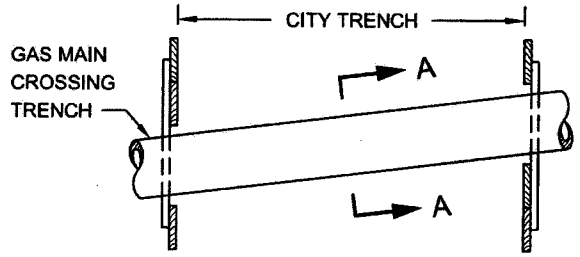

SINGLE FACILITY CROSSING

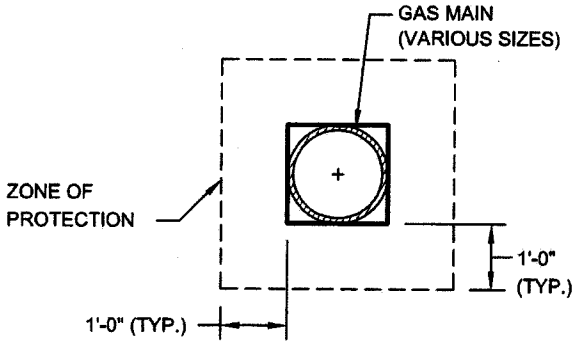

SECTION A-A

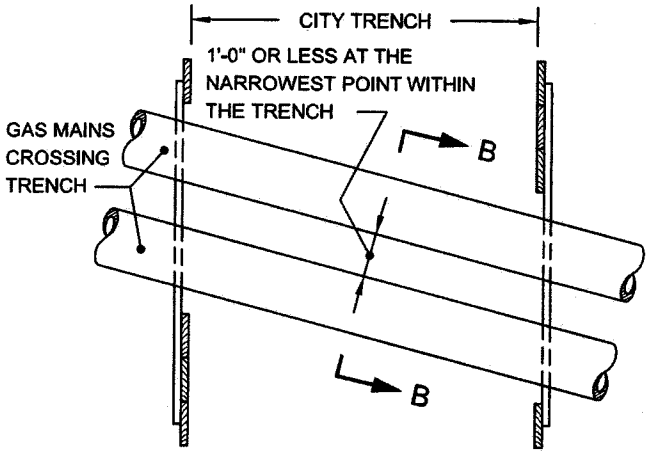

MULTIPLE FACILITIES
(GAS MAINS AT SAME ELEVATION)

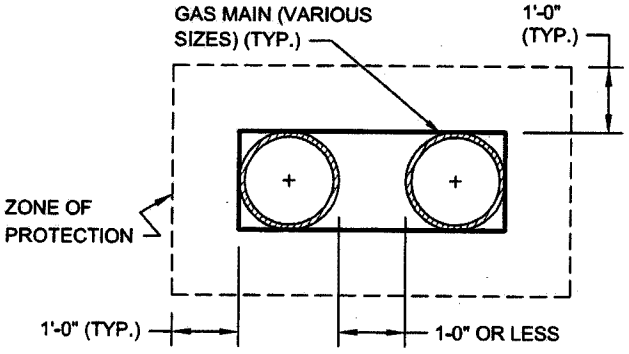

SECTION B-B

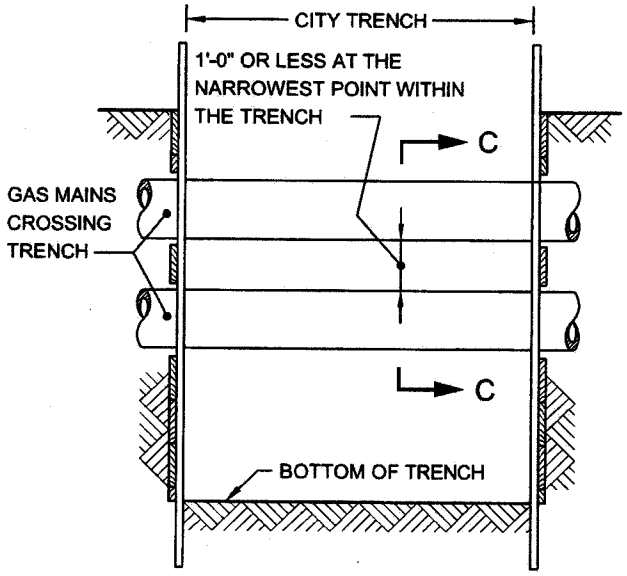

MULTIPLE FACILITIES
(ONE CROSSING AT DIFFERENT ELEVATIONS)

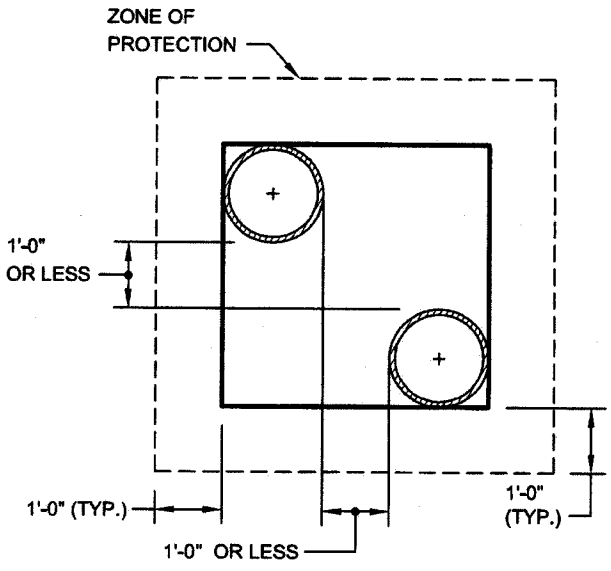

SECTION C-C

NOTE:

GAS MAINS MAY OR MAY NOT BE PARALLEL TO EACH OTHER.

REVISED SEPT. 2004 - L. ADRIEN
REVISED SEPT. 2004 - J. WONG/W. PATALANO/P. MOY

GAS COST SHARING WORK (SKETCH NO. 3)

UTILITY CROSSINGS DURING CATCH BASIN CHUTE CONNECTION PIPE INSTALLATION

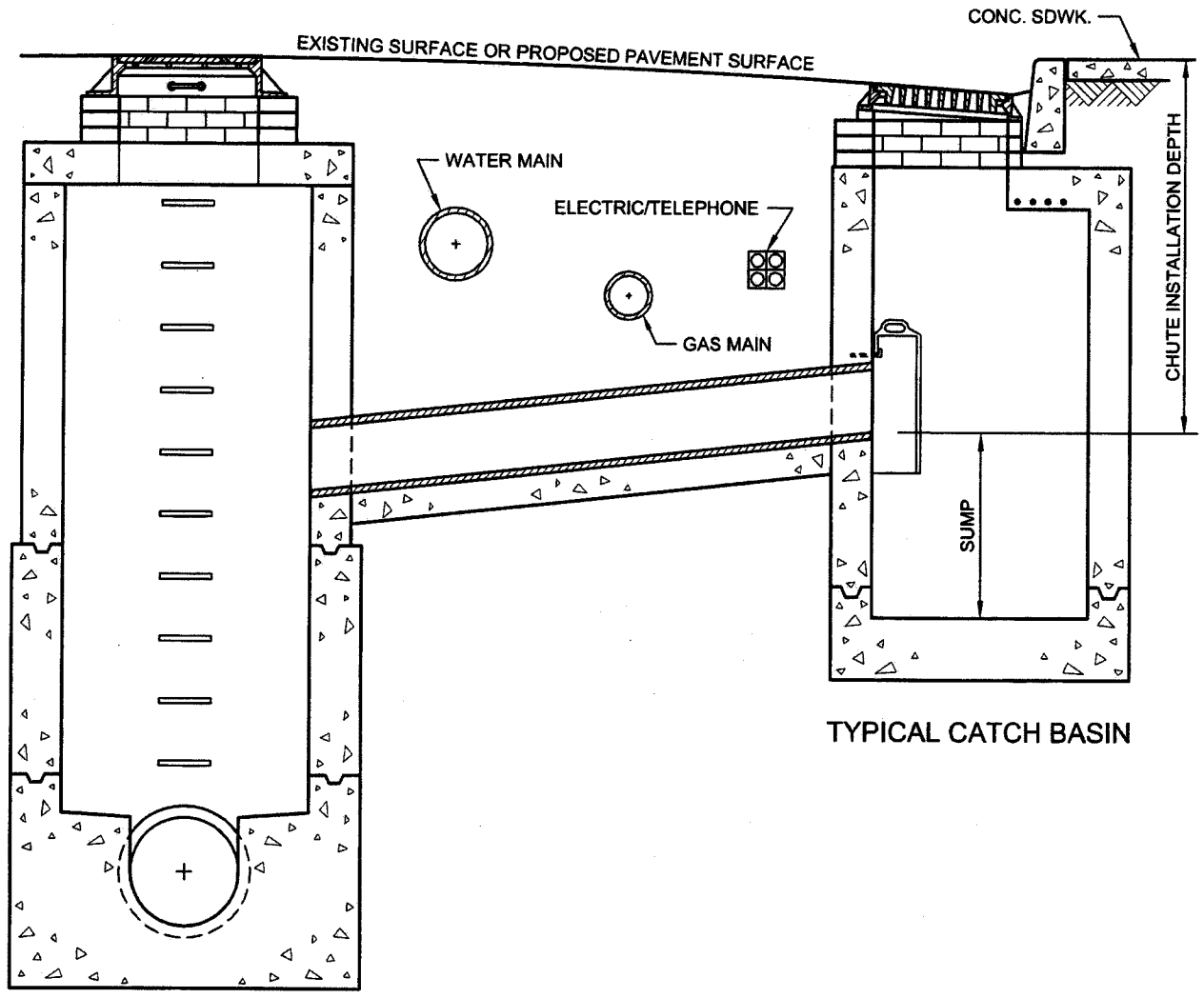

TYPICAL CATCH BASIN

TYPICAL SEWER MANHOLE

REVISED OCT. 2004 - I. ADRIEN
REVISED OCT. 1998 - J. WONG/W. PATALANO/P. MOY

GAS COST SHARING WORK (SKETCH NO. 4)

UTILITY CROSSINGS DURING CATCH BASIN CHUTE CONNECTION PIPE INSTALLATION (EXTRA DEPTH)

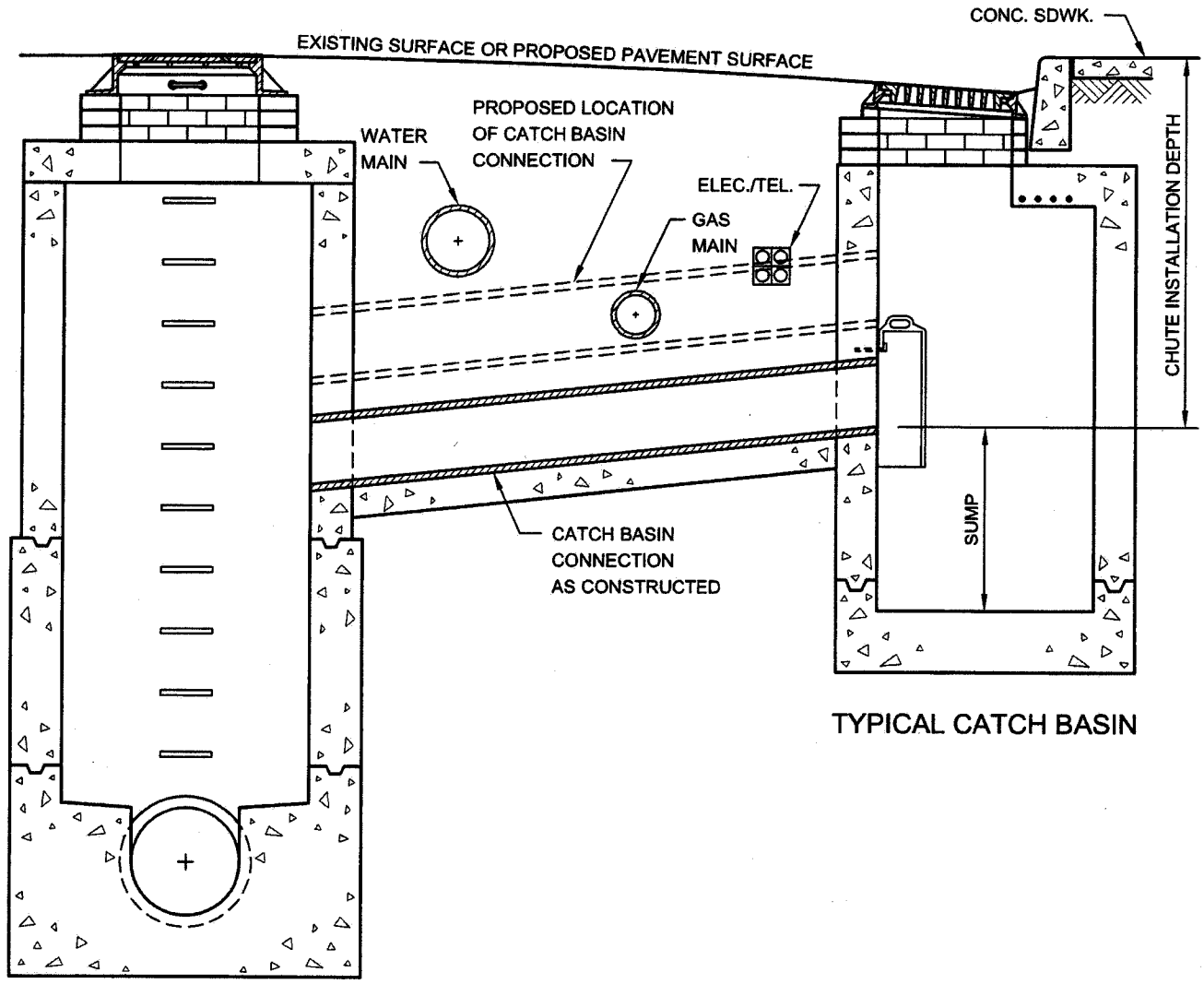

TYPICAL CATCH BASIN

TYPICAL SEWER MANHOLE

REVISED OCT. 2004 - I. ADRIEN
REVISED OCT. 1998 - J. WONG/W. PATALANO/P. MOY

GAS COST SHARING WORK (SKETCH NO. 5)

GAS MAIN ENCROACHMENT ON AND/OR PARALLEL TO EXCAVATION OF UNSHEETED TRENCH

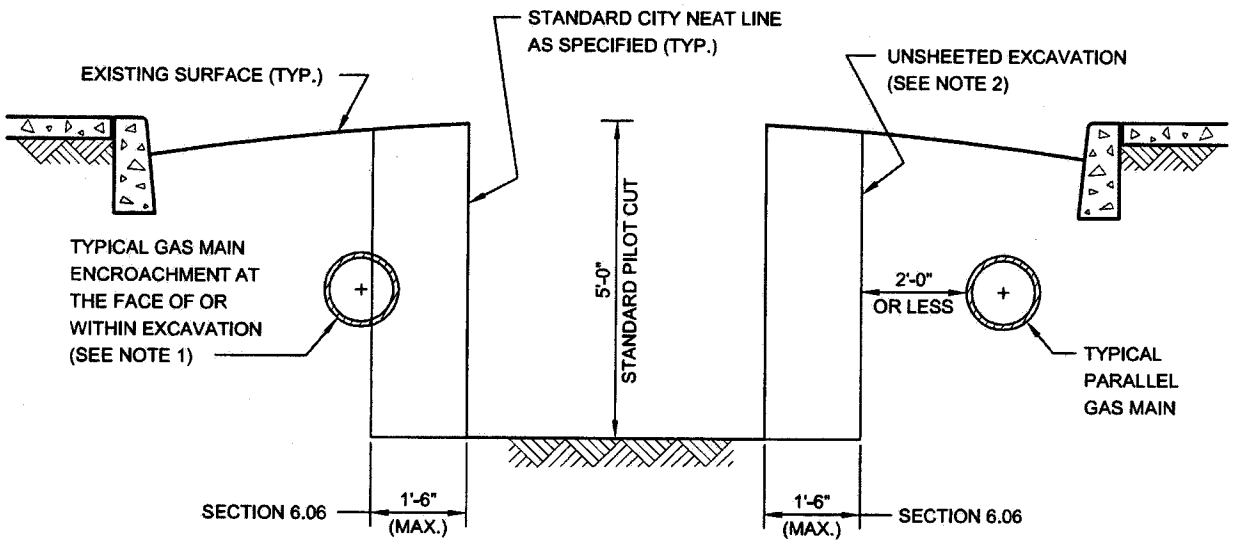

NOTES:

(1) GAS MAIN LOCATED AS SHOWN MAY HAVE TO BE REMOVED BY THE FACILITY OPERATOR PRIOR TO THE START OF CITY EXCAVATION, OTHERWISE, THE CONTRACTOR WILL BE PAID UNDER SECTION 6.06 FOR THE SAID WORK. IF GAS MAIN IS ABANDONED THEN SECTION 6.03 SHALL APPLY.

(2) EIGHTEEN (18) INCHES FROM STANDARD NEAT LINE IS THE MAXIMUM ALLOWABLE WIDTH OF AREA THAT MAY BE DISTURBED OR EXCAVATED DURING INSTALLATION OF CERTAIN TYPES OF SHEETING SYSTEMS THAT MEET THE REQUIREMENTS OF THE STANDARD SPECIFICATIONS OF THE DEPARTMENT OF DESIGN AND CONSTRUCTION OF THE CITY OF NEW YORK.

REVISED OCT. 2004 - I. ADRIEN
REVISED OCT. 1998 - J. WONG/W. PATALANO/P. MOY

V - PRELIMINARY GAS WORK TO BE PERFORMED BY FACILITY OPERATOR

APPLICABLE TO ALL GAS DRAWINGS:

- ALL SUPPORT AND PROTECTION WORK IS TO BE PERFORMED BY CITY CONTRACTOR.
- NO CAPITAL WORK IS ANTICIPATED AT THIS TIME.
- IF ADDITIONAL INFORMATION IS NEEDED REGARDING THE FACILITY OPERATOR RELOCATION WORK, THE CONTRACTOR IS ADVISED TO CONTACT THE GAS COMPANY REPRESENTATIVE:

MS. THERESA KONG
CONSOLIDATED EDISON
4 IRVING PLACE, 12TH FLOOR SWC
NEW YORK, NY 10003
TEL.: 212-460-4834

(NO TEXT IN THIS AREA, TURN PAGE)

VI - LISTING OF APPROXIMATE LOCATIONS OF EP-7 BID ITEMS QUANTITIES

(NO TEXT IN THIS AREA, TURN PAGE)

SCOPE OF WORK
SUPPORT AND PROTECTION
FOR CONTRACT NUMBER HWXP136B

The City of New York Department of Design and Construction is planning to install sewers and/or water mains and all appurtenances in various locations in The City of New York along with all work incidental thereto.

6.01.1 - Support & Protect Gas Main Crossing Sewer Up To 24" In Diameter (Ea.)

1 in Grand Concourse Blvd. @ Rockwood St.
1 in Hawkstone St. @ Grand Concourse Blvd.
2 in Mt. Eden Pkwy. @ Grand Concourse Blvd.
1 in E. 173 St. @ Grand Concourse Blvd.
3 in Various Locations As Required.

6.01.9 - Support & Protect Gas Main Crossing Water Main Up To 20" In Diameter (Ea.)

1 in Grand Concourse Blvd. @ E 173 St.

6.06 - Special Care Excavation & Backfilling (C.Y.)

20 CY In Various Locations As Required, Including But Not Limited To All Gas Services Crossing Unsheeted Water Main Trenches.

6.07 - Test Pits For Gas Facilities (C.Y.)

30 in Various Locations As Required.

SW - PAGES

SEWER AND WATER MAIN REVISIONS TO SPECIFICATIONS

NOTICE

The Standard Sewer And Water Main Specifications of the Department of Environmental Protection (dated July 1, 2014), Sewer Design Standards of the Department of Environmental Protection (dated (September 2007) Revised January 2009), Water Main Standard Drawings of the Department of Environmental Protection (latest revisions), and Specifications For Trunk Main Work of the Department of Environmental Protection (dated July 2014) shall be included as part of the contract documents. These said specifications and standard drawings are hereby revised under the following section headings:

A. NOTICE TO BIDDERS
B. REVISIONS TO THE STANDARD SEWER AND WATER MAIN SPECIFICATIONS
C. REVISIONS TO THE SPECIFICATIONS FOR TRUNK MAIN WORK

(NO TEXT ON THIS PAGE)

A. NOTICE TO BIDDERS

(1) The Contractor is notified that a Notice To Proceed (NTP) date will be issued for work to commence within twenty-one (21) to thirty (30) days of Contract Registration.

(2) The Contractor shall furnish, install, maintain and subsequently remove temporary Protective Tree Barriers. Protective Tree Barriers shall be Type B, unless otherwise directed by the Engineer, and shall be constructed and installed as shown on the Protective Tree Barrier sketch in Department Of Transportation, Standard Highway Details Of Construction, Drawing No. H-1046A, as directed by the Engineer, and in accordance with Department of Parks and Recreation requirements.

(3) All utility locations and invert elevations are not guaranteed, nor is there any guarantee that all existing utilities, whether functional or abandoned within the project area are shown.

(4) All existing house connections shall be maintained and supported during construction. The Contractor shall replace any existing house connection damaged as a result of the Contractor's construction operations as ordered by the Engineer at no cost to the City.

(5) The Contractor is advised that any City owned light poles, traffic signals, street name signs, traffic signs and encumbrances including, but not limited to, underground conduit displaced as the result of the installation of the new sewers, water mains, catch basins, catch basin connections and appurtenances shall be replaced in kind and as directed by the Engineer. The cost of such work shall be deemed included in the prices bid for all items of work under this contract.

(6) The Contractor is notified that Victaulic Style 77 Coupling is no longer acceptable for use in any steel water main work. All reference to Victaulic Style 77 Coupling within the Standard Sewer And Water Main Specifications of the Department of Environmental Protection (dated July 1, 2014), the Water Main Standard Drawings of the Department of Environmental Protection (latest revisions), the Specifications For Trunk Main Work (dated July 2014), and the contract drawings, shall be replaced with Bolted Split-Sleeve Restrained Coupling.

(7) The Contractor is notified that the fuel cost per gallon used in the formula under **Sub-Article 26.2.8** of the Standard Construction Contract for **Extra Work** will be derived from the fuel price index for the United States East Coast published weekly by the United States Energy Information Administration ("USEIA"), and available on its website at http://www.eia.gov/petroleum/gasdiesel/ . The USEIA published cost per gallon for the applicable fuel on the East Coast for the week in which the first day of each calendar quarter during the contract term occurs (i.e., January 1st, April 1st, July 1st and September 1st) will be used in the reimbursement formula for all **Extra Work** invoiced that was performed during that calendar quarter. Should the USEIA stop publishing this fuel price index, the fuel cost per gallon will be determined by reference to a substitute index to be agreed upon by the Contractor and the City.

(8) The Contractor is responsible for any damage to the existing street and traffic signal equipment, including underground conduits and the safety of both pedestrian and vehicular traffic for the duration of the contract.

Should any conduits, cables or foundations need repair due to the Contractor's negligent operations during construction, all work shall be performed according to NYCDOT Bureau of Traffic's Standard Drawings and Specifications at the sole expense of the Contractor.

It is the Contractor's responsibility to secure an approved electrical contractor to perform all traffic signal work (if any). For list of approved electrical contractors, contact Mr. Michael R. LeFosse of New York City Department of Transportation at (212) 839-3799.

(9) The Contractor shall exercise extreme caution and take all necessary precautions in placing sheeting and excavating to prevent any damage to the existing NYC TRANSIT'S subway structures and its appurtenances during construction work throughout the project area. The Contractor shall take full responsibility to protect the said NYC TRANSIT'S subway structures and its appurtenances and any

damage caused by the Contractor's operations shall be made good by the Contractor to the satisfaction of the Engineer at no additional cost to the City.

(10)The Contractor shall submit shop drawings to NYC Transit Authority showing all the details and methods of construction, such as, sheeting and bracing, including the Contractor's procedure and sequence of construction, supporting and/or protection of the existing TA's structures and its appurtenances, with necessary design calculations for approval prior to starting of the construction. The design shall be made by a New York State Licensed Professional Engineer skilled in this type of construction and as further evidenced by the imprint of Professional Engineer's seal and signature on all drawings. The cost of this work shall be deemed included in the price bid for all items of work under this contract.

B. REVISIONS TO THE STANDARD SEWER AND WATER MAIN SPECIFICATIONS

(1) Refer to **Subsection 10.21 - Contractor To Notify City Departments**, Page I-13:
Add the following to **Subsection 10.21**:

(1) N.Y.C. D.E.P., BUREAU OF WATER AND SEWERS OPERATIONS

The Contractor shall notify Mr. Peter Gordon, P.E., Chief, Linear Capital Program Management Division at the Department of Environmental Protection, 59-17 Junction Blvd., 3rd floor low rise, Corona N.Y. 11368, at least thirty (30) days prior to the start of construction.

(2) NEW YORK CITY FIRE DEPARTMENT

The Contractor shall notify the Bureau of Fire Communications at least thirty (30) days prior to the start of construction by contacting Mr. Ed Durkin at (718) 624-4194 or (718) 624-3752.

(3) N.Y.C. DEPARTMENT OF TRANSPORTATION

The Contractor shall notify Mr. Steve Galgano, P.E. Chief of Signal/Street Lighting Operations, 34-02 Queens Blvd., Long Island City, N.Y. 11101 at (718) 786-3550, at least seventy-two (72) hours prior to the start of construction.

(4) N.Y.C. DEPARTMENT OF PARKS AND RECREATION

The Contractor shall notify the Parks Department at least seventy-two (72) hours prior to the start of construction by contacting Mr. James Cruickshank at (718) 965-7739.

(5) N.Y.C. TRANSIT AUTHORITY

(a) The Contractor shall notify Outside Projects at least seven (7) days prior to the start of construction.

The Contractor shall contact:

Mr. Mohamed Adam, P.E.
Project Engineer-Outside Projects
New York City Transit
2 Broadway, 7th Floor
New York, N.Y. 10004
Attention Ms. Alina Avadanei
Telephone No. (646) 252-3641

(b) The Contractor is advised that bus routes as well as bus stops, within the scope of this project may be affected during construction operations. The Contractor shall notify the Transit Authority at least two (2) weeks prior to the start of construction, in order to make the necessary arrangements as required under the NYC TRANSIT GENERAL NOTES included in **Section 10.25, paragraph (A)**, **Section 10.25 paragraph (B)**, and **Section 10.25 paragraph (C)** of this section.

Arrangements shall be made through:

Ms. Sarah Wyss
Director Of Short Range, Bus Service Planning (SRB)
New York City Transit
2 Broadway, 17th Floor
New York, N.Y. 10004
Telephone No. (646) 252-5517

sarah.wyss@nyct.com

(c) In addition, the Contractor is advised that construction operations might affect subway lines and stations; and NYCT facilities (i.e. manholes, ducts, etc.). The Contractor shall notify the Transit Authority as required and specified in **Section 10.25 paragraph (A)**, **Section 10.25 paragraph (B)**, and **Section 10.25 paragraph (C)** of this section.

(2) Refer to **Subsection 10.25 - Contractor To Carry Out Agreement Between City And Railroad Company Or Property Owner(s)**, Page I-14:
Add the following to **Subsection 10.25**:

(A) NYC TRANSIT GENERAL NOTES

For NYC TRANSIT notes see the contract drawings.

(B) NYC TRANSIT INSURANCE REQUIREMENTS

N.Y.C. TRANSIT INSURANCE: The Contractor (Permittee) shall indemnify and save harmless the City of New York and the New York City Transit (Permittor) in accordance with the following "Insurance Requirements" and proof that the necessary insurance is in effect will be required before work can commence:

NYCT "OUTSIDE CONTRACT" INSURANCE REQUIREMENTS

(1) The Permittee at its sole cost and expense shall carry or cause to carried and shall maintain at all times during the period of performance under this Agreement policies of insurance as herein below set forth below:

(A) Workers' Compensation Insurance - (including Employer's Liability Insurance) with limits as specified in Schedule "A", which limit may be met by a combination of primary and excess insurance meeting the statutory limits of New York State. The policy shall be endorsed to include Longshoreman's and Harbor Workers' Compensation Act/Maritime Coverage Endorsement and/or Jones Act Endorsement when applicable.

(B) Commercial General Liability Insurance - (I.S.O. 2001 Form or equivalent) approved by Permittor in the Permittee's name with limits of liability as specified in Schedule "A" for each occurrence on a combined single limit basis for injuries to persons (including death) and damages to property. The limits may be provided in the form of a primary policy or combination of primary and umbrella/excess policy. When the minimum contract amounts can only be met when applying the umbrella/excess policy; the Umbrella/Excess Policy must follow form of the underlying policy and be extended to "drop down" to become primary in the event primary limits are reduced or aggregate limits are exhausted. Such insurance shall be primary and non-contributory to any other valid and collectable insurance and must be exhausted before implicating any Permittor/MTA policy available.

Such policy should be written on an occurrence form; and shall include:

- Contractual coverage for liability assumed by the Permittee under this agreement;
- Personal and Advertising Injury Coverage;
- Products-Completed. Operations;
- Independent Contractors Coverage;
- "XCU" coverage (Explosion, Collapse, and Underground Hazards) where necessary;

- Contractual Liability Exclusion, applicable to construction or demolition operations to be performed within 50 feet of railroad tracks, must be voided, where necessary; and,

- Additional Insured Endorsement (I.S.O. Form CG 20 26 07/04 version or equivalent) approved the Permittor naming:

  New York City Transit Authority (NYCTA), the Manhattan and Bronx Surface Transit Operating Authority (MaBSTOA), the Staten Island Rapid Transit Operating Authority (SIRTOA), MTA Capital Construction Co., the Metropolitan Transportation Authority (MTA) including its subsidiaries and affiliates, and the City of New York (as Owner).

(C) Business Automobile Liability Insurance Policy - (I.S.O. Form CA 00 01 10 01 or equivalent) approved by the Permittor is required if Permittee's vehicle enters Permittor property. The insurance must be in the name of the Permittee or its contractor entering the Permittor property with limits of liability in the amount specified in Schedule "A" for claims for bodily injuries (including death) to persons and for damage to property arising out of the ownership, maintenance or use of any owned, hired or non-owned motor vehicle.

(D) Railroad Protective Liability Insurance policy shall be required as specified in Schedule "A".

(E) Environmental/Pollution Exposures:

In the event environmental or pollution exposures exist, the Permittee shall require the environmental contractor or sub-contractor to provide the applicable insurance covering such exposure. The limits and type of insurance provided shall be satisfactory to the Permittor and will be confirmed to the parties prior to the start of the work.

(2) General Requirements Applicable To Insurance Policies:

(a) All of the insurance required by this Article shall be with Companies licensed or authorized to do business in the State of New York with an A.M. Best Company rating of not less than A-/VII or better and reasonably approved by the Permittor/MTA and shall deliver evidence of such policies.

(b) Except for Workers Compensation, all references to forms and coverages referred to above shall be the most recent used by the Insurance Services Office, Inc. (ISO") or equivalent forms approved by the Insurance Department of the State of New York, provided, however, that excess coverages may be written on forms reasonably acceptable to Permittor containing provisions other than those contained in ISO forms but otherwise conforming in substance to the requirements of this Article.

(c) The Permittee or its Contractor performing the work shall furnish evidence of all policies before any work is started to the permittor:

For NYCT Contract Inspection
C/O Mr. John Malvasio
Director, MOW Engineering
130 Livingston Street, Room 8044F
Brooklyn, NY 11201
Telephone: (718) 694-1358

These policies must: (i) be written in accordance with the requirements of the paragraphs above, as applicable; (ii) be endorsed in form acceptable to include a provision that the policy will not be canceled, materially changed, or not renewed, unless otherwise indicated herein, at least thirty (30) days prior written notice to the Permittor c/o MTA Risk and Insurance Management (MTA RIM) Department - Standards, Enforcement & Claims Unit, 2 Broadway - 21st floor, New York, NY 10004; and (iii) state or be endorsed to provide that the coverage afforded under the contractor's policies shall apply on a primary and not on an excess or contributing basis with any policies which may be available to the Permittor/MTA, and also

that the contractor's policies, primary and excess, must be exhausted before implicating any Permittor/MTA policy available. (iv) In addition, contractor's policies shall state or be endorsed to provide that, if a subcontractor's policy contains any provision that may adversely affect whether contractor's policies are primary and must be exhausted before implicating any Permittor/MTA policy available, contractor's and subcontractor's policies shall nevertheless be primary and must be exhausted before implicating any Permittor/MTA policy available. Except for Professional Liability, policies written on claims made basis are not acceptable. At least two (2) weeks prior to the expiration of the policies, contractor shall endeavor to provide evidence of renewal or replacement policies of insurance, with terms and limits no less favorable than the expiring policies. Except as otherwise indicated in the detailed coverage paragraphs below, self insured retentions and policy deductibles shall not exceed $100,000, unless such increased deductible or retention is approved by Permittor/MTA. The Permittee shall be responsible for all claim expense and loss payments within the deductible or self-insured retention. The insurance monetary limits required herein may be met through the combined use of the insured's primary and umbrella/excess policies.

(d) Certificates of Insurance may be supplied as evidence of policies of the above policies, except for Policy (D) Railroad Protective Liability Insurance Policy. However, if requested by the Permittor, the Permittee shall deliver to the Authority, within forty-five (45) days of be request, a copy of such policies, certified by the insurance carrier as being true and complete. The Railroad Protective Liability Insurance Policy must be provided in the form of the Original Policy. A detailed Insurance Binder may be provided, ACORD or Manuscript Form, pending issuance of the Original Policy. The Original Policy must be submitted to MTA RIM within thirty (30) days of the Binder Approval.

(e) If a Certificate of Insurance is submitted, it must: (1) be provided on the Permittor Certificate of Insurance Form or MTA Certificate of Insurance Form for Joint Agency Agreements; (2) be signed by an authorized representative of the insurance carrier or producer and notarized; {3) disclose any deductible, self-insured retention, sub-limit, aggregate limit or any exclusions to the policy that materially change the coverage; (4) indicate the Additional Insureds and Named Insureds as required herein, along with a physical copy of the Additional Insured Endorsement (I.S.O. Form CG 20 26 07/04 version or equivalent), as applicable and the endorsement(s) must include policy number(s); (5) reference the Contract by number on the face of the certificate; and (6) expressly reference the inclusion of all required endorsements.

(f) The minimum amounts of insurance required in the detail description of policies (A), (B), (C), and (D) above shall not be construed to limit the extent of the Permittee's liability under this Agreement.

(g) If, at any time during the period of this Agreement, insurance as required is not in effect, or proof thereof is not provided to the Permittor, the Permittor shall have the options to: (i) direct the Permittee to suspend work or operation with no additional cost or extension of time due on account thereof; or (ii) treat such failure as an Event of Default.

(C) NYC TRANSIT CURRENT AND FUTURE PROJECTS

For NYC TRANSIT CURRENT AND FUTURE PROJECTS see the contract drawings.

(3) **Refer** to **Subsection 10.30 - Contractor To Provide For Traffic**, Page I-15:
Add the following to **Subsection 10.30**:

(1) Traffic Stipulations:

The Contractor shall refer to Traffic Stipulations identified in the maintenance of traffic requirements under Highway Contract No. HWXP136B.

(4) **Refer** to **Subsection 71.41.4 - Specific Pavement Restoration Provisions**, Page VII-67:
Add the following to **Subsection 71.41.4**:

(E) Specific Pavement Restoration Provisions:

(1) Within the limits of the highway reconstruction the restoration shall be accomplished and paid for in accordance with Highway Construction Plans, Details and Specifications for Highway Project ID. HWXP136B.

C. REVISIONS TO THE SPECIFICATIONS FOR TRUNK MAIN WORK

1) **Refer** to **Part 1 – Furnishing And Delivering Steel Pipes And Appurtenances 30 Inches In Diameter And Larger, Section 11. Fabrication:**, Page 4;
Add the following to **Section 11:**

All steel water mains shall be spiral welded pipes, and all steel water main fittings shall be fabricated from qualified spiral welded pipe. Can type pipe is not acceptable.

2) **Refer** to **Part 1 – Furnishing And Delivering Steel Pipes And Appurtenances 30 Inches In Diameter And Larger, Section 13. Special Fittings:**, Page 5;
Add the following to **Section 13:**

The steel reducer shall have a length of seven (7) feet for every twelve (12) inches reduction in diameter.

END OF SECTION
This Section consists of eight (8) pages

HAZ - PAGES

SPECIFICATIONS FOR HANDLING, TRANSPORTATION AND DISPOSAL OF NONHAZARDOUS AND POTENTIALLY HAZARDOUS CONTAMINATED MATERIALS

NOTICE

THE PAGES CONTAINED IN THIS SECTION ARE ISSUED FOR THE PURPOSE OF SPECIFYING THE REQUIREMENTS OF THE CONTRACT DOCUMENTS AND HEREBY MADE PART OF SAID CONTRACT DOCUMENTS.

(NO TEXT ON THIS PAGE)

Table of Contents

ITEM 8.01 C1 HANDLING, Transporting and Disposal of Non-Hazardous Contaminated Soils.....HAZ-2

ITEM 8.01 C2 Sampling And Testing Of Contaminated/ Potentially Hazardous Soil For Disposal Parameters.....HAZ-8

ITEM 8.01 H Handling, Transporting, and Disposal of Hazardous SoilS.....HAZ-10

ITEM 8.01 S HEALTH AND SAFETY.....HAZ-15

ITEM 8.01 W1 Removal, Treatment And Discharge/Disposal Of Contaminated Water.....HAZ-20

ITEM 8.01 W2 Sampling And Testing Of Contaminated Water.....HAZ-26

Attachments

1. New York City Department of Environmental Protection Limitations for Effluent to Storm-Sanitary or Combined Sewers Parameters
2. Applicable Regulations
3. Definitions
4. Phase II Subsurface Corridor Investigation Report

ITEM 8.01 C1 HANDLING, TRANSPORTING AND DISPOSAL OF NON-HAZARDOUS CONTAMINATED SOILS

8.01 C1.1 WORK TO INCLUDE

General: This work shall consist of the handling, transportation and disposal of non-hazardous contaminated soils. The materials covered by this specification are soils that are contaminated with petroleum or chemical products but cannot be classified as hazardous waste. For the purpose of this specification, soil shall be defined as any material excavated below the pavement and base for pavement.

Non-hazardous contaminated soils are defined as soils exhibiting one or more of the following characteristics:

- Elevated Photo-Ionization Detector (PID) readings, subsequently confirmed by lab analysis
- Visual evidence of contamination
- Petroleum and/or chemical odors
- Soils that have been documented as contaminated in previous environmental reports

Non-hazardous contaminated soils must be stockpiled at an off-site approved location or secured on-site by the Contractor, meeting all required Federal, State and Local stipulations. Sampling and laboratory analysis must be conducted to determine if the soils are hazardous, unless the alternative procedure as defined under subsection 8.01 C1.1 A.5 has been agreed upon by treatment facilities. Contaminated soils determined to be non-hazardous shall be handled in accordance with the specifications herein for Item 8.01 C1. Contaminated soils determined to be hazardous shall be handled in accordance with the specifications for Item 8.01 H – Handling, Transporting and Disposal of Hazardous Soils.

The Contractor shall retain the services of an independent Environmental Consultant, as specified under Item 8.01 S – Health and Safety, to oversee the work required under this Item.

Non-hazardous soils shall be delivered to the disposal or treatment facility within thirty (30) calendar days after excavation.

The Contractor shall conduct sampling and analysis of the impacted soils as specified under Item 8.01 C2 – Sampling and Testing of Contaminated/Potentially Hazardous Soils for Disposal Parameters. The laboratory results shall be forwarded to DDC Program Management, Office of Environmental and Geotechnical Services (OEGS) for review to determine if the soils will be handled and disposed of as contaminated regulated soils or hazardous waste. No other soils shall be sampled or tested without the DDC's approval or direction.

The Contractor shall ensure that all operations associated with the handling, sampling, loading, transportation, and disposal of non-hazardous contaminated soils are in compliance with all applicable Federal, State, and City statutes and regulations.

The Contractor shall document the excavation, handling, transportation and disposal of non-hazardous contaminated soils. The Contractor shall supply all equipment, material and labor required to conduct the specified work of this Item.

A. Material Handling Plan: Within forty-five (45) calendar days after award of Contract, the Contractor shall submit to the Program Management, OEGS for review, a Material Handling Plan (MHP). The MHP must be approved by the Program Management, OEGS, prior to the Contractor's commencement of work. The MHP shall, at a minimum, consist of:

1. The Contractor's procedures for identifying non-hazardous contaminated soils during excavation, including the specific model and manufacturer of intended organic vapor monitoring equipment and calibration procedures to be used. It should also include the training and experience of the personnel who will operate the equipment.

1. The Contractor's procedures for safely handling non-hazardous contaminated soils. The procedures must include personnel safety and health as well as environmental protection considerations.

3. Name, address, New York State Department of Health's (DOH) Environmental Laboratories Accreditation Program (ELAP) status and telephone number of the proposed laboratory for analysis of representative soil samples. The ELAP for the intended analysis must approve the laboratory.

4. Identification of the Contractor's proposed waste transporter(s). This information shall include:

   a. Name and Waste Transporter Permit Number

   b. Address

   c. Name of responsible contact for the hauler

   d. Telephone number for the contact

   e. Any and all necessary permit authorizations for each type of waste transported

   f. Previous experience in performing the type of work specified herein

5. All staging/stockpiling areas (if stockpiling areas are intended and available), or alternate procedures that will be used. Alternate procedures may include, but are not limited to, agreements from the intended disposal or treatment facilities to accept boring data and/or analytical data previously obtained during the site characterization so that materials may be directly loaded into vehicles for shipment to the disposal facility.

6. A backup facility should the staging/stockpile areas become unavailable, insufficient in area or not be present by some other unforeseen difficulty.

7. Identification of the Contractor's two proposed Treatment Storage or Disposal (TSD) facilities for non-hazardous contaminated soils (primary and back-up) for final disposal of the soils. The primary TSD shall be an approved soil recycling/treatment facility. The backup facility may be a recycling/treatment facility or a New York State Department of Environmental Conservation (DEC) approved lined landfill or other facility approved by DEC to accept this material. The information required for each facility shall include:

   a. Facility name and the State identification number

      (1) Facility location

      (2) Name of responsible contact for the facility

      (3) Telephone number for contact

      (4) Signed letter of agreement to accept waste as specified in this contract

      (5) Unit of measure utilized at facility for costing purposes

   b. A listing of all permits, licenses, letters of approval, and other authorizations to operate, which are currently held and valid for the proposed facility.

c. A listing of all permits, licenses, letters of approval, and other authorizations to operate which have been applied for by the proposed facility but not yet granted or issued.

d. The Contractor shall specify and describe the disposal/containment unit(s) that the proposed facility will use to manage the waste. The Contractor shall identify the capacity available in the units and the capacity reserved for the subject waste.

e. The Contractor shall provide the date of the proposed facility's last compliance inspection.

f. A list of all active (unresolved) compliance orders (or agreements), enforcement notices, or notices of violations issued to the proposed facility shall be provided. The source and nature of the cause of violation shall be stated, if known.

8. Description of all sampling and field/laboratory analyses that will be needed to obtain disposal facility approval.

8.01 C1.2 MATERIALS

A. Containers shall be as required in the United State Department of Transportation (DOT) regulations.

B. Polyethylene to be placed under (20 mil. thickness minimum) and over (10 mil. thickness minimum) soil piles.

C. The Contractor shall assure that the waste hauler's appropriate choice of vehicles and operating practices shall prevent spillage or leakage of contaminated material from occurring en route.

D. The Contractor shall provide, install and maintain any temporary loading facilities on site as required until completion of material handling activities. The location and design of any facilities shall be included in the MHP and be approved by the Program Management, OEGS.

8.01 C1.3 CONSTRUCTION DETAILS

A. Material Handling

1. Immediately after excavation of non-hazardous contaminated soil the Contractor shall:

   a. Load material directly onto trucks/tankers/roll offs for disposal off site; or

   b. If interim stockpiling is required, place on a minimum of 20 mil. or equivalent plastic ground cloth and cover by minimum of 10 mil. polyethylene sheeting or equivalent to protect against leaching or runoff of contaminants into groundwater or stormwater. Weight or secure the sheeting by appropriate means and seal seams as approved by the DDC to prevent tearing or removal by weather. Grade surrounding surface to provide for positive drainage away from pile. Stockpile shall not exceed 100 cubic yards.

2. Institute appropriate procedures and security measures to ensure the protection of site personnel and the public from contaminated materials as described in the approved MHP and Item 8.01 S - Health and Safety.

3. Any soil encountered that appears to contain unknown contaminants (based on visual, odor, or other observation), or that vary substantially from the material originally identified must be segregated in stockpiles and the independent Environmental

Consultant promptly notified. Construct stockpiles to the same requirements as stated in subsection A.1.b above.

4. Provide any dewatering that is necessary to complete the work. Contaminated water shall be disposed of in accordance with Item 8.01 W1 – Removal, Treatment and Discharge/Disposal of Contaminated Water.

5. Provide and operate field organic vapor test equipment, a PID or a flame ionization detector (FID), to detect general organic vapor levels at intervals of approximately fifty (50) cubic yards of soil excavated, when visual or odor observations indicate the material may substantially differ from the soil previously excavated and/or as directed by the independent Environmental Consultant.

B. Off-Site Transportation to Disposal or Treatment Facility

1. General

a. The Contractor shall furnish all labor, equipment, supplies and incidental costs required to transport contaminated material from the work area to the off-site disposal or treatment facility, and any other items and services required for transporting contaminated material for disposal at an off-site facility.

b. The Contractor shall submit the name and location of the facility where an off-site scale is located. The Contractor shall also submit a plan to the DDC for review outlining procedures on controlling trucks leaving the work site and en-route to the off-site scale. The Contractor shall be responsible for tracking all material/vehicles from the site to the off-site scale.

c. The Contractor shall provide to the DDC certified tare and gross weight slips for each load received at the accepted facility which shall be attached to each returned manifest.

d. The Contractor shall coordinate the schedule for truck arrival and material deliveries at the job site to meet the approved project schedule.

e. The Contractor shall inspect all vehicles leaving the project site to ensure that contaminated soils adhering to the wheels or undercarriage are removed prior to the vehicle leaving the site.

f. The Contractor shall obtain letters of commitment from the waste haulers and the treatment, disposal or recovery facility to haul and accept shipments. The letter shall indicate agreement to handle and accept the specified estimated quantities and types of material during the time period specified in the project schedule and any time extension as deemed necessary.

g. **The Program Management, OEGS shall review and approve waste profiles before transportation to the TSD facility.**

2. Hauling

a. The Contractor shall coordinate manifesting, placarding of shipments, and vehicle decontamination. All quantities shall also be measured and recorded upon arrival at the disposal or treatment facility. If any deviation between the two records occurs, the matter is to be reported immediately to the DDC and to be resolved by the Contractor to the satisfaction of the DDC.

b. The Contractor shall be held responsible, at its own cost for any and all actions necessary to remedy situations involving material spilled in transit or mud and dust tracked off-site.

c. The Contractor shall ensure that trucks are protected against contamination by properly covering and lining them with compatible material (such as polyethylene) or by decontaminating them prior to and between acceptances of loads.

d. The Contractor shall be responsible for inspecting the access routes for road conditions, overhead clearance, and weight restrictions.

e. The Contractor shall only use the transporter(s) identified in the MHP for the performance of work. Any use of substitute or additional transporters must have previous written approval from the Program Management, OEGS at no additional cost to the City.

f. The Contractor shall develop, document, and implement a policy for accident prevention.

g. The Contractor shall not combine contaminated materials from other projects with material from this project.

h. No material shall be transported until approved by the DDC.

3. Off-Site Disposal

a. The Contractor shall use only the facility(ies) identified in the MPH for the performance of the work. Substitutions or additions shall not be permitted without prior written approval from the Program Management, OEGS, and if approved shall be at no extra cost to the City.

b. The Contractor shall be responsible for acceptance of the materials at an approved facility, for ensuring that the facility is properly permitted to accept the stated materials, and that the facility provides the stated treatment and/or disposal services.

c. The DDC reserves the right to contact and visit the disposal or treatment facility and regulatory agencies to verify the agreement to accept the stated materials and to verify any other information provided.

d. In the event that the identified and approved facility ceases to accept the stated materials or the facility ceases operations, it is the Contractor's responsibility to locate an alternate approved and permitted facility(ies) for accepting materials. The alternate facility(ies) must be approved in writing by the DDC in the same manner and with the same requirements as for the original facility(ies). This shall be done at no extra cost or delay to the City.

e. The Contractor shall obtain manifest forms, and complete the shipment manifest records required by the appropriate regulatory agencies for verifying the material and quantity of each load in unit of volume and weight. Copies of each manifest shall be submitted to the DDC within four (4) business days following shipment, and within three (3) business days after notification of receipt of the facility. Any manifest discrepancies shall be reported immediately to the DDC and be resolved by the Contractor to the satisfaction of the DDC.

4. Equipment and Vehicle Decontamination

a. The Contractor shall design and construct a portable decontamination station to be

used to decontaminate equipment and vehicles exiting from the exclusion zone. The cost for this work will be paid under Item 8.01 S - Health and Safety.

b. Water generated during the decontamination process shall be disposed of in accordance with Item 8.01 W1 – Removal, Treatment and Discharge/Disposal of Contaminated Water.

8.01 C1.4 METHOD OF MEASUREMENT

Quantities for non-hazardous contaminated soils shall be measured in tons. The tonnage will be determined by off-site truck scales, as per Subsection 8.01 C1.3.B1, that are capable of generating load tickets.

8.01 C1.5 PRICE TO COVER

A. The unit bid price bid per ton for Item 8.01 C1 shall include the cost of furnishing all labor, materials, equipment, plan, and insurance for excavation, handling, transportation, disposal, documentation, fees, permits, loading, stockpiling, hauling, and any other incidentals necessary to complete all the work as specified herein for handling, transporting, and disposal of non-hazardous contaminated soil.

B. Final disposal of hazardous soil shall be paid for under Item 8.01 H – Handling, Transporting and Disposal of Hazardous Soils. Disposal of decontamination water shall be paid for under Item 8.01 W1 – Removal, Treatment and Discharge/Disposal of Contaminated Water.

C. Backfill will be paid for under its respective item as specified in the contract document.

D. The independent Environmental Consultant shall be paid under Item 8.01 S – Health and Safety.

Payment will be made under:

ITEM NUMBER	ITEM	PAYMENT UNIT
8.01 C1	Handling, Transporting, and Disposal of Non-Hazardous Contaminated Soil	Tons

ITEM 8.01 C2 SAMPLING AND TESTING OF CONTAMINATED/ POTENTIALLY HAZARDOUS SOIL FOR DISPOSAL PARAMETERS

8.01 C2.1 WORK TO INCLUDE

A. Description

The work shall consist of collecting and analyzing representative soil samples for parameters typically requested by the disposal facilities.

B. Sampling and Laboratory Analysis

1. At least thirty (30) days prior to the commencement of work, the Contractor's independent Environmental Consultant must submit a Soil Sampling Plan/Field Sampling Plan (SSP/FSP) to the Program Management, Office of Environmental and Geotechnical Services (OEGS) for review and approval. The plan shall include the name, address, DOH's ELAP status, and telephone numbers of the proposed laboratory. The plan shall also include training and experience of the personnel who will collect the samples.

2. The Contractor shall sample and analyze representative samples of the contaminated/potentially hazardous soils. For stockpiled soils, the Contractor shall collect and analyze one (1) composite sample per 500 cubic yards or fraction thereof. Each composite sample shall consist of a minimum of five (5) grab samples collected from greater than two (2) feet below the soil surface. For drummed soil, the Contractor shall collect one (1) composite sample per (ten) 10 drums or fraction thereof. Each composite sample shall consist of a grab sample from each of the ten (10) drums or fraction thereof. Each composite sample shall be analyzed for Resource Conservation and Recovery Act (RCRA) hazardous waste characteristics (Ignitability, Reactivity, Corrosivity), Full Toxicity Characteristic Leaching Procedure (TCLP) (including RCRA metals, volatile Organic Compounds (VOCs), Semi-Volatile Organic Compounds (SVOCs), pesticides, herbicides), Total Petroleum Hydrocarbons (TPH) and Polychlorinated Biphenyls (PCBs). All samples collected should be analyzed on a five (5) calendar days turn around time and analytical results must be submitted to Program Management, OEGS upon receipt of the analytical results.

3. All sampling shall be conducted by a person trained in sampling protocols using standard accepted practices for obtaining representative samples.

4. The Contractor must also contact the disposal facility where the waste will be sent for permanent disposal, and arrange to collect any additional samples required by the facility. The cost associated with additional sampling and testing shall be included in the bid price of this Item.

5. The quality of the data from the sampling program is the Contractor's responsibility. The Contractor must furnish all qualified personnel, equipment and instruments necessary to carry out the sampling. Unless directed otherwise, all sampling procedures must follow the DEC sampling guidelines and protocols.

6. All sample containers shall be marked and identified with legible sample labels which shall indicate the project name, sample location and/or container, the sample number, the date and time of sampling, preservatives utilized and other information that may be useful in determining the character of the sample. Chain-of-custody shall be tracked from laboratory issuance of sample containers through laboratory receipt of the samples.

7. The Contractor shall maintain a bound sample logbook. The Contractor shall provide DDC access to it at all times and shall turn it over to the DDC in good condition at the completion of the work. The following information, as a minimum shall be recorded to the log:

    1. Sample identification number
    2. Sample location
    3. Field observation
    4. Sample type
    5. Analyses
    6. Date/time of collection
    7. Collector's name
    8. Sample procedures and equipment utilized
    9. Date sent to laboratory and name of laboratory

8. The City reserves the right to direct the Contractor to conduct alternative sampling in lieu of the parameters described in subsection B2, if the situation warrants. The substitute sampling parameters shall be of equal or lesser monetary value than those described in subsection B2, as determined by industry laboratory pricing standards.

9. Only dedicated sampling equipment may be used to collect these samples. All equipment involved in field sampling must be decontaminated before being brought to the sampling location, and must be properly disposed after use.

10. Soils exceeding any of the hazardous characteristic criteria meet the legal definition of hazardous soils (rather than non-hazardous contaminated soils) and shall be transported or disposed of under Item 8.01 H – Handling, Transporting and Disposal of Hazardous Soils. All analyses must be done by a laboratory that has received approval from the ELAP for the methods to be used. The Contractor must specify the laboratory in the MHP.

8.01 C2.2 METHOD OF MEASUREMENT

Quantities for samples shall be measured as the number of sets of samples that are tested. A set shall be defined as one (1) composite sample analyzed for the full range of parameters as specified in subsection B2.

8.01 C2.3 PRICE TO COVER

The unit price bid per set for Item 8.01 C2 shall include the cost of furnishing all labor, materials, equipment, plan, and insurance necessary for sampling, handling, transporting, testing, documentation, fees, permits and any other incidentals necessary to complete the work as specified herein for sampling and testing of contaminated/potentially hazardous soil.

Payment will be made under:

ITEM NUMBER	ITEM	PAYMENT UNIT
8.01 C2	Sampling and Testing of Contaminated/ Potentially Hazardous Soil for Disposal Parameters	Set

ITEM 8.01 H HANDLING, TRANSPORTING, AND DISPOSAL OF HAZARDOUS SOILS

8.01 H.1 WORK TO INCLUDE

General: This work shall consist of the handling, transportation and disposal of soils or materials that are listed as hazardous wastes or exhibit any of the characteristics of a hazardous waste, namely ignitability, corrosivity, reactivity, and toxicity, as defined in 6 NYCRR Part 371, Section 371.3 and 40 CFR Section 261. For the purpose of this specification, soils shall be defined as any materials excavated below the pavement and base for pavement.

Contaminated soils determined to be hazardous under Item 8.01 C2 shall be handled, transported, and disposed of under Item 8.01 H in accordance with the specifications herein.

The independent Environmental Consultant retained by the Contractor, as specified under Item 8.01 S – Health and Safety, shall conduct sampling and analysis of above soils to determine which soils are hazardous.

All work under Item 8.01 H shall be performed under the direct supervision of the Contractor's Environmental Consultant, as approved by the Program Management, Office of Environmental and Geotechnical Services (OEGS).

The Contractor shall ensure that all operations associated with the handling, sampling, loading, transportation, and disposal of hazardous materials are in compliance with the applicable Federal, State, and Local statutes and regulations.

The Contractor shall document the excavation, handling, sampling, and testing, transportation and disposal of hazardous soils. The City shall be listed in the disposal documents as the waste generator.

The Contractor shall supply all equipment, material and labor required to conduct the specified work of this section.

The Contractor shall ensure that all operations associated with the handling, sampling, loading, transportation and disposal of hazardous soils are conducted in a manner to protect site personnel, the public and the environment, in accordance with all applicable Federal, State, and Local laws and regulations.

The Contractor shall decontaminate all equipment prior to its removal from the exclusion zone and/or following contact with hazardous materials, as detailed in Item 8.01 S - Health and Safety. Water generated during the decontamination process shall be disposed of under Item 8.01 W1 – Removal, Treatment and Discharge/Disposal of Contaminated Water.

A. Material Handling Plan: Within forty-five (45) calendar days after award of Contract, the Contractor shall submit to the Program Management, OEGS for review, a Material Handling Plan (MHP). The MHP must be approved by the Program Management, OEGS, prior to the Contractor's commencement of work. The MHP shall, at a minimum, consist of:

   1. The Contractor's procedures for identifying contaminated/potentially hazardous soils during excavation, including instrumentation and calibration procedures to be used.
   2. The Contractor's procedures for safely handling hazardous soils or soils which have not yet been tested but are believed to be potentially hazardous.
   3. Identification of the Contractor's proposed waste transporter(s). This information shall include:
      a. Name and waste transporter permit number
      b. Address

c. Name of responsible contact for the hauler

d. Telephone number for the contact

e. Any and all necessary permit authorizations for each type of waste transported

f. Previous experience in performing the type of work specified herein

4. All staging/stockpiling areas (if stockpiling areas are intended and available), or alternate procedures that will be used. Alternate procedures could include, but are not limited to, agreements from the intended disposal or treatment facilities to accept boring data and/or analytical data previously obtained during the site characterization so that materials may be directly loaded into vehicles for shipment to the disposal facility or the use of off-site stockpiling locations approved by the DEC.

5. A backup facility, should the staging/stockpile areas become unavailable, insufficient in area or not be present by some other unforeseen difficulty.

6. Identification of the Contractor's two proposed United State Environmental Protection Agency (EPA) or DEC approved RCRA TSD facilities for hazardous soils.

7. The Contractor shall submit the following information prior to any transportation of soils regarding the temporary and final off-site TSD or facilities where it is proposing to take hazardous soils. The expense of furnishing all information will be included in the Contractor's bid price:

   a. General Information

      (1) Facility name and the EPA identification number

      (2) Facility location

      (3) Name of responsible contact for the facility

      (4) Telephone number for contact

      (5) Signed letter of agreement to accept waste as specified in this contract

      (6) Signed letter of agreement with a TSD for disposal of waste that may not be land-disposed

      (7) Unit of measure utilized at each facility for costing purposes

   b. A listing of all permits, licenses, letters of approval, and other authorizations to operate, which are currently held and valid for the proposed facility as they pertain to receipt and management of wastes derived from this Contract.

   c. A listing of all permits, licenses, letters of approval, and other authorizations to operate which have been applied for by the proposed facility.

   d. The Contractor shall specify and describe the disposal/containment unit(s) that the proposed facility will use to manage the waste. The Contractor shall identify the capacity available in the units and the capacity reserved for the subject waste.

   e. The Contractor shall provide the date of the proposed facility(ies) last compliance inspection under RCRA.

   f. A list of all active (unresolved) compliance orders, agreements, enforcement notices or notices of violations issued to the proposed facility shall be approved. The source and nature of the cause of violation shall be stated, if known.

8. Description of all sampling and analyses that will be needed to obtain disposal facility approval.

8.01 H.2 MATERIALS

A. Containers shall be watertight as required in the DOT regulations and must meet all applicable regulations including but not limited to those in Attachment 2.

B. Polyethylene (20 mil. thickness minimum) to be placed under and (10 mil. thickness minimum) over soil piles. If soils are placed in drums, polyethylene must be placed over the drums.

8.01 H1.3 CONSTRUCTION DETAILS

A. Material Handling

1. The Contractor shall institute procedures to protect site personnel and the public from the non-hazardous and hazardous materials as described in Section 8.01 S - Health and Safety.
2. The Contractor shall handle hazardous soil as approved in the MHP.
3. Stockpiled materials at the temporary TSD facility shall be handled according to the facility requirements but at a minimum: shall be drummed or placed on and covered with polyethylene to protect against erosion and leaching into surrounding soils, the stockpile area shall be graded for positive drainage away from the pile, and shall be labeled while being held for sampling prior to permanent disposal.
4. Provide any dewatering that is necessary to complete the work. Water shall be disposed of in accordance with Item 8.01 W1 – Removal, Treatment and Discharge/Disposal of Contaminated Water.

B. Off-Site Transportation and Disposal

1. The Contractor shall furnish all labor, equipment and supplies required to transport hazardous materials from the work area to the off-site TSD facility(ies) and to acquire any other items and services required for transporting hazardous materials for storage and/or disposal at an approved off-site facility.
2. Weight Measurement
   a. The Contractor shall submit the name and location of the facility where an off-site scale is located. The Contractor shall also submit a plan to the DDC for review outlining procedures on controlling trucks leaving the work site and on-route to the off-site scale. The Contractor shall be responsible for tracking all materials/vehicles from the site to the off-site scale.
   b. The Contractor shall provide to the DDC certified tare and gross weight slips for each load received at the accepted facility which shall be attached to each returned manifest.
3. General
   a. Manifests: The Contractor shall organize and maintain the material shipment records/manifests required by law.

b. The Contractor shall coordinate the schedule for truck arrival and material deliveries at the job site to meet the approved project schedule. The schedule shall be compatible with the availability of equipment and personnel for material handling at the job site.

c. The Contractor shall inspect all vehicles leaving the project site to ensure that hazardous soils adhering to the wheels or under carriage are removed prior to the vehicle leaving the site.

d. The Contractor shall obtain letters of commitment from the waste haulers and the TSD facility to haul and accept shipments. The letter shall indicate agreement to handle and accept the specified estimated quantities and types of material during the time period specified in the project schedule and any time extension as deemed as necessary.

4. Hauling

a. The Contractor shall not deliver waste to any facility other than the TSD facility(ies) listed on the shipping manifest.

b. The Contractor shall coordinate manifesting, placarding, of shipments, and vehicle decontamination. All quantities shall also be measured and recorded upon arrival at the TSD facility. If any deviation between the two records occurs, the matter is to be reported immediately to the DDC and to be resolved by the Contractor to the satisfaction of the DDC.

c. The Contractor shall be held responsible, at its own expense, for any and all actions necessary to remedy situations involving material spilled in transit or mud and dust tracked off-site.

d. The Contractor shall ensure that trucks are protected against contamination by properly covering and lining them with compatible material (such as polyethylene) or by decontaminating them prior to any use other than hauling hazardous materials.

e. The Contractor shall be responsible for inspecting the access routes for road conditions, overhead clearance, and weight restrictions.

f. The Contractor shall only use the transporter(s) identified in the MHP for the performance of work. Only a transporter with a current Part 364 Waste Transporter Permit from the DEC may transport this material. Any use of substitute or additional transporters must have previous written approval from the DDC at no additional cost to the City.

g. The Contractor shall develop, document, and implement a policy for accident prevention.

h. The Contractor shall not combine hazardous materials from other projects with material from this project.

i. **The Contractor shall obtain for the City an EPA hazardous waste generator identification number and a representative of Program Management, OEGS will review and sign the manifest as the generator.**

j. No materials shall be transported until approved by the DDC.

5. Off-Site Disposal

a. The Contractor shall be responsible for acceptance of the materials at an approved TSD facility, for ensuring that the facility is properly permitted to accept the stated materials, and that the facility provides the stated storage and/or disposal services.

b. In the event that the identified and approved facility ceases to accept the stated materials or the facility ceases operations, it is the Contractor's responsibility to locate an alternate approved and permitted facility(ies) for accepting materials. The Contractor is responsible for making the necessary arrangements to utilize the facility(ies), and the alternate facility(ies) must be approved in writing by the DDC in the same manner and with the same requirements as for the original facility(ies). This shall be done with no extra cost or delay to the City.

c. The Contractor shall submit all results and weights to the DDC.

d. **The Contractor is responsible to pay all fees associated with the generation and disposal of all excavated hazardous waste. These fees include, but are not limited to, the New York State Department of Finance and Taxation (DFT) quarterly fees for hazardous waste and the New York State DEC annual hazardous waste regulatory fee program. The Contractor shall submit a copy of proof of payment to the DDC and Program Management, OEGS.**

6. Equipment and Vehicle Decontamination

The Contractor shall design and construct a portable decontamination station to be used to decontaminate equipment and vehicles exiting from the exclusion zone. The cost for this work shall be paid under Item 8.01 S - Health and Safety. Disposal of decontamination liquids is described under Item 8.01 W1 – Removal, Treatment and Discharge/Disposal of Contaminated Water.

7. Record Keeping

The Contractor shall obtain manifest forms, and complete the shipment manifest records required by the appropriate regulatory agencies for verifying the material and quantity of each load in unit of volume and weight. Copies of each manifest shall be submitted to the DDC within four (4) business days following shipment, and within three (3) business days after notification of receipt of the facility. Any manifest discrepancies shall be reported immediately to the DDC and be resolved by the Contractor to the satisfaction of the DDC.

8.01 H.4 METHOD MEASUREMENT

Quantities for hazardous soil shall be measured in tons satisfactorily delivered to the treatment, storage or disposal facility. The tonnage will be determined by off-site truck scales, as per subsection 8.01 H1.3.B.2, that are capable of generating load tickets.

8.01 H.5 PRICE TO COVER

A. The unit price bid per ton for Item 8.01 H shall include the cost of furnishing all labor, materials, equipment, plan, and insurance for excavation, handling, transportation, disposal, documentation, permits, fees, taxes, stockpiling, hauling, and any other incidentals necessary to complete the work as specified herein for handling, transporting and disposal of hazardous soils.

B. Final disposal of non-hazardous materials shall be paid for under Item 8.01 C1 – Handling, Transporting and Disposal of Non-Hazardous Soils. Disposal of decontamination water shall

be paid under Item 8.01 W1 – Removal, Treatment and Discharge/Disposal of Contaminated Water.

C The independent Environmental Consultant shall be paid under Item 8.01 S – Health and Safety.

D. Backfill will be paid for under its respective item.

Payment will be made under:

ITEM NUMBER	ITEM	PAYMENT UNIT
8.01 H	Handling, Transporting, and Disposal of Hazardous Soils	Tons

ITEM 8.01 S HEALTH AND SAFETY

8.01 S.1 WORK TO INCLUDE

Health and Safety Requirements

A. Scope of Work

It is the Contractor's responsibility to stage and conduct his work in a safe manner. The Contractor shall implement a Health and Safety Plan (HASP) for contaminated/hazardous soil intrusive activities as set forth in Occupational Safety and Health Administration (OSHA) Standards 1910.120 and 1926.650-652. The Contractor shall ensure that all workers have at a minimum hazard awareness training. The Contractor shall segregate contaminated work area in secured exclusion zones. These zones shall limit access to Contractor personnel specifically trained to enter the work area. The exclusion zone shall be set up to secure the area from the public and untrained personnel. The project health and safety program shall apply to all construction personnel including persons entering the work area. In addition, the Contractor shall protect the public from on-site hazards, including subsurface contaminants associated with on-site activities. The HASP shall be signed off by a Certified Industrial Hygienist and reviewed by Program Management, Office of Environmental and Geotechnical Services (OEGS).

Work shall include, but not be limited to:

1. Implementation of a baseline medical program.
2. Providing safety equipment and protective clothing for site personnel, including maintenance of equipment on a daily basis; replacement of disposable equipment as required; decontamination of clothing, equipment and personnel; and providing all other health and safety measures.
3. Providing, installing, operating and maintaining on-site emergency medical first aid equipment as specified in this section for which payment is not provided under other pay items in this Contract.
4. Providing, installing, operating, maintaining and decommissioning all equipment and personnel decontamination facilities specified within this section, including, but not limited to, the decontamination pad, decontamination water supply, decontamination water collection equipment and all other items and services required for the

implementation of the health and safety requirements for which pay items are not provided elsewhere in this Contract.

5. Provide the minimum health and safety requirements for excavation activities within the limits of this Contract.

6. Implement and enforce a HASP: The HASP as presented in these specifications is dynamic with provisions for change to reflect new information, new practices or procedures, changing site environmental conditions or other situations which may affect site workers and the public. The HASP will also address measures for community protection, accident prevention, personnel protection, emergency response/contingency planning, air monitoring, odor control and hazardous chemicals expected on site. Providing a Confined Space Entry Program as defined in the Occupational Safety and Health Act, Confined Space Entry Standard, 29 CFR 1910.146.

B. Environmental Consulting Services

The Contractor shall retain an independent Environmental Consultant to obtain all permits and perform all field screening, air monitoring, community air monitoring, soil sampling, and health and safety services. The independent Environmental Consultant shall at a minimum provide documentation to the Program Management, OEGS demonstrating the minimum requirements as set forth below:

1. The independent Environmental Consultant project supervisor on site and other designated key personnel shall have a minimum of three (3) years experience in the environmental field dealing with issues associated with contaminated soils. Such experience shall include oversight on environmental, specifically volatile organic compound and dust monitoring services as a routine part of its daily operations.

2. The independent Environmental Consultant must be experienced in work of this nature, size, and complexity and must have previous experience in working with the DEC.

3. The independent Environmental Consultant shall furnish a project listing identifying the location, nature of services provided, owner, owner's contact, contact's telephone number, project duration and value for at least five (5) projects within the last three (3) years.

4. If conditions within the exclusion zone are deemed hazardous, then the Contractor and its independent Environmental Consultant shall ensure that all personnel working within identified exclusion zones and/or involved (direct contact) with the handling, storage or transport of hazardous and contaminated materials shall have completed a minimum of forty (40) hours of Health and Safety Training on Hazardous Waste Sites in accordance with 29 CFR 1910.120(e). The training program shall be conducted by a qualified safety instructor. If conditions in the exclusion zone are deemed to be non-hazardous, the independent Environmental Consultant shall provide site specific training.

5. The Contractor shall ensure that on-site management and supervisors directly responsible for or who supervise employees engaged in hazardous waste operations shall receive the training specified in above and at least eight (8) additional hours of specialized training on managing such operations at the time of job assignment.

C. Submittals

1. The Contractor shall submit, within forty-five (45) calendar days after the contract award, a written HASP as specified herein, to Program Management, OEGS for review and comment. The Contractor shall make all necessary revisions required by Program Management, OEGS and resubmit the HASP to the Program Management, OEGS for

acceptance. Start-up work for the project will not be permitted until written acceptance has been issued by the Program Management, OEGS.

2. Daily safety logs shall be maintained by the Contractor and shall be submitted to the DDC either on request or on completion of the work. Training logs shall be maintained by the Contractor and submitted to the DDC either on request or on completion of the work. Daily logs on air monitoring during excavation activities shall be prepared and maintained by the Contractor and submitted to the DDC either on request or upon completion of the work.

3. A closeout report shall be submitted by the Contractor to the DDC upon completion of the work within the defined exclusion zones. This report shall summarize the daily safety and monitoring logs and provides an overview of the Contractor's performance regarding environmental and safety issues. The report shall carefully document all areas where contamination has been found including pictures, addresses of locations, and potential sources.

4. Medical Surveillance Examinations: The Contractor shall submit to the DDC the name, office address and telephone number of the medical consultant utilized. Evidence of baseline medical examinations together with the evidence of the ability to wear National Institute for Occupational Safety and Health (NIOSH) approved respirators (as specified in American National Standards Institute (ANSI) Z88.6) shall be provided to the DDC for all construction personnel who are to enter the exclusion zones.

5. Accident Reports: All accidents, spills, or other health and safety incidents shall be reported to the DDC.

D. Health and Safety Plan

The HASP shall comply with OSHA regulations 29 CFR 1910.120/1926.65. This document shall at a minimum contain the following:

1. Description of work to be performed
2. Site description
3. Key personnel
4. Worker training procedures
5. Work practices and segregation of work area
6. Hazardous substance evaluation
7. Hazard assessment
8. Personal and community air monitoring procedures and action levels
9. Personal protective equipment
10. Decontamination procedures
11. Safety rules
12. Emergency procedures
13. Spill control, dust control, vapor/odor suppression procedures
14. Identification of the nearest hospital and route
15. Confined space procedures
16. Excavation safety procedures

8.01 S.2 MEASUREMENT

Health and Safety Requirements

A. 25% of the lump sum price will be paid when the following items are implemented or mobilized:

Medical surveillance program
Health and safety training
Health and safety plan
Environmental and personnel monitoring
Instrumentation
Spill control
Dust control
Personnel and equipment decontamination facilities
Personnel protective clothing
Communications
Mobilization

B. 50% will be paid in proportional monthly amounts over the period of work.

C 25% will be paid when the operation is demobilized and removed from the project site.

8.01 S.3 PRICE TO COVER

Health and Safety Requirements

The lump sum price bid for the health and safety requirements shall include all labor, materials, equipment, and insurance necessary to complete the work in accordance with these specifications. The price bid shall include, but not be limited to, the following:

A. Providing training, safety personnel, air monitoring and medical examinations as specified.

B. Providing safety equipment and protective clothing for site personnel, including maintenance of equipment on a daily basis; replacement of disposable equipment as required; decontamination of clothing, equipment and personnel; and all other health and safety activities or costs not paid for under other pay items in this Contract.

C. Providing, installing, operating and maintaining on-site emergency medical and first aid equipment. This includes all furnishings, equipment, supplies and maintenance of all medical equipment, and all other health and safety items and services for which payment is not provided under other pay items in this Contract.

D. Providing, installing, operating, maintaining, and decommissioning all personnel and equipment decontamination facilities, including decontamination pad, decontamination water supply, and all other items and services required for the implementation of the health and safety requirements for which pay items are not provided elsewhere in this Contract. Vehicle decontamination pads shall be included in the price of this item. Disposal of decontamination fluid shall be paid for under Item 8.01 W1 – Removal, Treatment and Discharge/Disposal of Contaminated Water.

E. Spill Control

1. Payment shall account for furnishing, installing, and maintaining all spill control equipment and facilities. Payment will include equipment and personnel to perform emergency measures required to contain any spillage and to remove spilled materials and soils or liquids that become contaminated due to spillage during work within the exclusion zones and handling of excavated soils and liquids from these areas. This collected spill material will be properly disposed of.

2. Payment under this item shall not include testing, handling, transportation or disposal of petroleum-contaminated/potentially hazardous soils excavated during construction. The price for this work will be paid for under Items 8.01 C1 – Handling, Transporting and

Disposal of Non-Hazardous Contaminated Soils, 8.01 C2 – Sampling and Testing of Contaminated/Potentially Hazardous Soil for Disposal Parameters or 8.01 H – Handling, Transporting and Disposal of Hazardous Soils, as appropriate.

F. Dust Control

Payment shall account for furnishing, installing, and maintaining dust control equipment and facilities to be used whenever applicable dust levels are exceeded. Payment will include all necessary labor, equipment, clean water, foam, and all other materials required by the Dust Control Plan. The DOH Community Air Monitoring Plan (CAMP) may be used as guidance.

G. Vapor/Odor Suppression

Payment shall account for furnishing, installing and maintaining vapor/odor control equipment and facilities to be used whenever organic vapor monitoring or the presence of odors indicates that vapor suppression is required to protect workers or the public. Payment will include all necessary labor, equipment, clean water, foam and all other materials required by the Vapor/Odor Suppression Plan.

H. Mobilization/Demobilization

1. Mobilization

Payment shall include but not be limited to:

a. All work required to furnish, install and maintain all signs, fencing, support zone facilities, parking areas and all temporary utilities;

b. All work required to furnish, install, and maintain an office space with phone and utilities for health and safety personnel;

c. All work required for complete preparation of lay down area for roll-off containers, including sampling, and any required fencing;

d. All direct invoiced cost from bonding companies and government agencies for permits and costs of insurance; and

e. All other items and services required for mobilization and site preparation.

2. Demobilization

Payment shall include but not be limited to: All work required to sample the area; remove from the site all equipment, temporary utilities and supporting facilities; performance of necessary decontamination and repairs; disposal of disposable equipment and protective gear and other items and services required for complete demobilization.

Payment will be made under:

ITEM NUMBER	ITEM	PAYMENT UNIT
8.01 S	Health and Safety	Lump Sum

ITEM 8.01 W1 REMOVAL, TREATMENT AND DISCHARGE/DISPOSAL OF CONTAMINATED WATER

8.01 W1.1 WORK TO INCLUDE

General: This work shall consist of the proper removal and disposal of all contaminated groundwater and decontamination water generated during construction operations. The Contractor shall be solely responsible for the proper disposal or discharge of all contaminated water generated at the job site. The Contractor will have the option of treating water on-site for discharge to the combined sanitary/storm sewer system or removing contaminated water for off-site disposal. The Contractor shall be responsible to choose a method compatible to the construction work and shall be compensated on a per day basis regardless of method employed. The Contractor will be compensated for only those days where the system is in full operation.

The Contractor shall retain a dewatering/water treatment Specialist (hereinafter the "Specialist") and laboratory as specified under Item 8.01 W2 – Sampling and Testing of Contaminated Water, to conduct any testing that may be required for disposal of impacted water.

The dewatering/water treatment Specialist is responsible to obtain all permits; perform all water sampling, testing; and provide ancillary services related to dewatering and water treatment. The Specialist shall at a minimum provide documentation to the Program Management, Office of Environmental and Geotechnical Services (OEGS) demonstrating the minimum requirements as set forth below:

1. The Specialist shall demonstrate that it has, at a minimum, three (3) years experience in the design of dewatering plans. The Specialist should demonstrate expertise dealing with issues associated with contaminated water. During that three (3) year period, the Specialist shall demonstrate that it provided dewatering and water treatment systems as a routine part of its daily operations.
2. The Specialist must be experienced in work of this nature, size, and complexity and must have previous experience in working with the DEC.
3. The Specialist shall furnish a project listing identifying the location, nature of services provided, owner, owner's contact, contact's telephone number, project duration and value for at least five (5) projects within the last three (3) years of a similar nature, size, and complexity to this one.
4. If conditions within the exclusion zone are deemed hazardous, then the Contractor and its independent Environmental Consultant shall ensure that all personnel working within identified exclusion zones and/or involved (direct contact) with the handling, storage or transport of hazardous and contaminated material shall have completed a minimum of forty (40) hours of Health and Safety Training on Hazardous Waste Sites in accordance with 29 CFR 1910.120(e). The training program shall be conducted by a qualified safety instructor. If conditions in the exclusion zone are deemed to be non-hazardous, the Specialist shall be responsible to provide site-specific training to its employees and other affected personnel.
5. The Contractor shall ensure that on-site management and supervisors directly responsible for or who supervise employees engaged in hazardous waste operations shall receive the training specified in above and at least eight (8) additional hours of specialized training on managing such operations at the time of job assignment.

The Contractor shall document all operations associated with the handling, sampling and disposal of contaminated water, and ensure that they are in compliance with applicable Federal, State and Local statutes and regulations.

The Contractor shall supply all labor, equipment, transport, plant, material, treatment, and other incidentals required to conduct the specified work of this section.

If water will be disposed of into the combined sanitary/storm sewer system, the Contractor shall ensure the Specialist treats the water to comply with the New York City Department of Environmental Protection (DEP) Sanitary/Combined and Storm Sewer Effluent Limit concentrations prior to discharge. The Contractor is responsible for providing settling or filtering tanks and any other apparatus required by DEP. Alternatively, the Contractor can provide a plan for transport and disposal at an off-site waste disposal facility.

Within forty-five (45) calendar days after award of Contract, the Contractor shall submit to the Program Management, OEGS for review, a Water Handling Plan (WHP). The WHP must be approved by the Program Management, OEGS, prior to the Contractor's commencement of work. The minimum requirements for the WHP are specified herein Item 8.01W 1.2, for each type of disposal (disposal into the combined sanitary/storm sewer or off-site disposal). The Contractor shall maintain a complete, up to date copy of the WHP on the job site at all times.

8.01 W1.2 CONSTRUCTION DETAILS

For each disposal method the Contractor proposes to utilize (disposal to combined sanitary/storm sewer or off-site disposal), the WHP shall include the information required in paragraphs A and B below, as appropriate.

A. <u>On-site treatment and discharge into New York City combined sanitary/storm sewers.</u>

1. Regulations: The Contractor shall comply with all applicable regulations. This includes but may not be limited to:

   Title 15-New DEP Sewer Use Regulations.

2. Permits: The Contractor is solely responsible to obtain all necessary and appropriate Federal, State and Local permits and approvals. The Contractor will be responsible for performing all and any system pilot tests required for permit approval. This includes but may not be limited to:

   a. Industrial waste approval for the New York City sewer system.

   b. Groundwater discharge permit for the New York City sewer system (DEP Division of Sewer Regulation and Control), if discharge to sewer exceeds 10,000 gallons per day.

   c. The Contractor shall comply with DEC State Pollutant Discharge Elimination System (SPDES) Permit Number GP-0-10-001, General Permit for Stormwater Discharges.

   d. Long Island well point permit for Brooklyn and Queens sites, if well points are used for dewatering.

   e. Wastewater quality control application, DEP.

3. The WHP for this portion of the work shall include at a minimum:

a. Identification and design of Contractor's proposed treatment to assure that the water meets the DEP sewer use guidelines prior to discharge to the sewer, including identification of all materials, procedures, settling or filtering tanks, filters and other appurtenances proposed for treatment and disposal of contaminated water.

b. The name, address and telephone number of the contact for the Contractor's proposed chemical laboratory, as well as the laboratory's certifications under Federal, State or non-governmental bodies.

c. The name, address and telephone number of the contact for the Contractor's proposed independent Environmental Consultant.

d. Copies of all submitted permit applications and approved permits the Contractor have received.

4. Materials

The Contractor shall supply all settling or filtering tanks, pumps, filters, treatment devices and other appurtenances for treatment, temporary storage and disposal of contaminated water. All equipment shall be suitable for the work described herein.

5. Execution

a. The Contractor is solely responsible for disposal of all water, in accordance with all Federal, State and Local regulations.

b. The Contractor is solely responsible for any treatment required to assure that water discharged into the sewer is in compliance with all permits and Federal, State and Local statutes and regulations.

c. The Contractor is solely responsible for the quality of the water disposed of into the sewers.

d. The Contractor is responsible for sampling and testing of water for the DEP Sanitary/Combined and Storm sewer Effluent Limit concentrations. The quality of the data is the Contractor's responsibility. Any sampling and testing shall be conducted and paid in accordance with Item 8.01 W2 – Sampling and Testing of Contaminated Water.

e. The Contractor shall be responsible to maintain the discharge rate to the sewer such that all permit requirements are met, the capacity of the sewer is not exceeded and no surcharging occurs downstream due to the Contractor's actions. Dewatering by means of well points or deep wells will not be allowed in the Boroughs of Brooklyn or Queens where the rate of pumping exceeds forty-five (45) gallons per minute unless the appropriate permit has been secured from the DEC.

f. Disposal of Treatment Media

(1) The Contractor shall be responsible for disposal or recycling of treatment media in accordance with all Federal, State and Local regulations.

(2) The Contractor shall provide the DDC with all relevant documentation concerning the disposal of treatment media, including manifests, bills of

lading, certificates of recycling or destruction and other applicable documentation.

(3) **Disposal of treatment media shall not be considered as a separate pay item; instead it shall be considered as incidental work thereto and included in the unit price bid.**

B. Off-Site Disposal

1. Regulations: The Contractor shall conform to all applicable Federal, State and Local regulations pertaining to the transportation, storage and disposal of any hazardous and/or non-hazardous materials as listed in Attachment 2.

2. The following shall be submitted to the DDC prior to initiating any off-site disposal:

a. (1) Name and waste transporter permit number

(2) Address

(3) Name of responsible contact for the hauler

(4) Any and all necessary permit authorizations for each type of waste transported

(5) Previous experience in performing the type of work specified herein

b. General information for each proposed treatment/disposal facility and at least one backup treatment/disposal facility

(1) Facility name and EPA identification number

(2) Facility location

(3) Name of responsible contact for the facility

(4) Telephone number for contact

(5) Unit of measure utilized at facility for costing purposes

c. A listing of all permits, licenses, letters of approval and other authorizations to operate, which are currently held and valid for the proposed facility as they pertain to receipt and management of the wastes derived from this Contract.

d. A listing of all permits, licenses, letters of approval and other authorizations to operate which have been applied for by the proposed facility but not yet granted or issued. Provide dates of application(s) submitted. Planned submittals shall also be noted.

e. The Contractor shall specify and describe the disposal/containment unit(s) that the proposed facility will use to manage the waste and provide dates of construction and beginning of use, if applicable. Drawings may be provided. The Contractor shall identify the capacity available in the units and the capacity reserved for the subject waste.

f. The Contractor shall provide the date of the proposed facility's last compliance inspection.

g. A list of all active (unresolved) compliance orders, agreements, enforcement notices or notices of violations issued to the proposed facility shall be submitted. The source and nature of the cause of violation shall be stated, if known. If groundwater contamination is noted, details of the facility's groundwater monitoring program shall be provided.

h. Description of all sampling and field/laboratory analyses that will be needed to obtain disposal facility approval.

3. Materials

All vessels for temporary storage and transport to an off-site disposal facility shall be as required in DOT regulations.

4. Execution

a. General

(1) The Contractor shall organize and maintain the material shipment records/manifests required by Federal, State and Local law. The Contractor shall include all bills of lading, certificates of destruction, recycling or treatment and other applicable documents.

(2) The Contractor shall coordinate the schedule for truck arrival and material deliveries at the job site to meet the approved project schedule. The schedule shall be compatible with the availability of equipment and personnel for material handling at the job site.

(3) The Contractor shall inspect all vehicles leaving the project site to ensure that contaminated liquids are not spilling and are contained for transport.

(4) The Contractor shall obtain letters of commitment from the waste haulers and the treatment, disposal or recovery facility to haul and accept shipment. The letter shall indicate agreement to handle and accept the specified estimated quantities and types of material during the time period specified in the project schedule and any time extension as deemed as necessary.

(5) The Contractor shall verify the volume of each shipment of water from the site.

(6) The Contractor is responsible for sampling and testing of water for off-site disposal. The quality of the data is the Contractor's responsibility. Any sampling and testing shall be conducted and paid in accordance with Item 8.01 W2 – Sampling and Testing of Contaminated Water.

(7) The Contractor shall be responsible for any additional analyses required by the TSD facility, and for the acceptance of the water at an approved TSD facility.

b. Hauling

(1) The Contractor shall not deliver waste to any facility other than the TSD facility(ies) listed on the shipping manifest.

(2) The Contractor shall coordinate manifesting, placarding of shipments, and vehicle decontamination. All quantities shall also be measured and recorded upon arrival at the TSD facility(ies). If any deviation between the two records occurs, the matter is to be reported immediately to the DDC and shall be resolved by the Contractor to the satisfaction of the DDC.

(3) The Contractor shall be held responsible for any and all actions necessary to remedy situations involving material spilled in transit or mud and dust tracked off-site. This cleanup shall be accomplished at the Contractor's expense.

(4) The Contractor shall be responsible for inspecting the access routes for road conditions, overhead clearance and weight restrictions.

(5) The Contractor shall only use the transporter(s) identified in the WHP for the performance of work. Only a transporter with a current Part 364 Waste Transporter Permit from DEC may transport this material. Any use of substitute or additional transporters must have previous written approval from the DDC at no additional cost to the City.

(6) The Contractor shall develop, document, and implement a policy for accident prevention.

(7) The Contractor shall not combine waste materials from other projects with material from this project.

(8) The Contractor shall obtain for the City a hazardous waste generator identification number and will sign the manifest as the generator, if necessary.

(9) No material shall be transported until approved by the DDC.

c. Disposal Facilities

(1) The Contractor shall use only the TSD facility(ies) identified in the WHP for the performance of the work. Substitutions or additions shall not be permitted without prior written approval from the Program Management, OEGS, and, if approved, shall be at no extra cost to the City.

(2) The Contractor shall be responsible for acceptance of the material at an approved TSD facility, for ensuring that the facility is properly permitted to accept the stated material, and that the facility provides the stated storage and/or disposal services.

(3) The DDC reserves the right to contact and visit the disposal facility and regulatory agencies to verify the agreement to accept the stated material and to verify any other information provided. This does not in any way relieve the Contractor of his responsibilities under this Contract.

(4) In the event that the identified and approved facility ceases to accept the stated materials or the facility ceases operations, it is the Contractor's responsibility to locate an alternate approved and permitted facility(ies) for accepting materials. The Contractor is responsible for making the necessary arrangements to utilize the facility(ies), and the alternate facility(ies) must be

approved in writing by the DDC in the same manner and with the same requirements as for the original facility(ies). This shall be done with no extra cost or delay to the City.

d. Equipment and Vehicle Decontamination

(1) The Contractor shall design and construct a portable decontamination station to be used to decontaminate equipment and vehicles exiting the exclusion zone. The cost for this work shall be paid under Item 8.01 S – Health and Safety.

8.01 W1.3 METHOD OF MEASUREMENT

The quantity for on-site treatment and discharge or off-site disposal shall be on a per day basis.

8.01 W1.4 PRICE TO COVER

A. The per day price bid for Item 8.01 W1 shall include the cost of furnishing all labor, materials, equipment, plan, and insurance for handling, transportation, disposal, documentation, permits, hauling, mobilization and demobilization, and any other incidentals thereto to complete the work.

B. The Contractor will not be paid for water that is within the DEP Sewer Discharge Limits.

Payment will be made under:

ITEM NUMBER	ITEM	PAYMENT UNIT
8.01 W1	Removal, Treatment and Disposal/Discharge of Contaminated Water	Day

ITEM 8.01 W2 SAMPLING AND TESTING OF CONTAMINATED WATER

8.01 W2.1 WORK TO INCLUDE

A. Description

The work shall consist of sampling and testing of potentially contaminated groundwater, surface runoff within the excavated area and all contaminated water generated during the decontamination process.

B. Sampling and Testing

1. The Contractor is responsible, at a minimum, for sampling and testing of contaminated water for the DEP Sanitary/Combined and Storm Sewer Effluent Limit concentrations as listed in Attachment 1. The quality of the data is the Contractor's responsibility. Any additional testing required by the Federal, State and/or disposal facilities shall be included in the bid price of this Item.

2. All sampling and testing shall be conducted by a person trained in sampling protocols using accepted standard practices and/or the DEC sampling guidelines and protocols.

3. All sample containers shall be marked with legible sample labels which shall indicate the project name, sample location and/or container, the sample number, the date and time of sampling, preservatives utilized, how the sample was chilled to 4 degrees Celsius, and other information that may be useful in determining the character of the sample.

4. Chain-of-custody shall be tracked from laboratory issuance of sample containers through receipt of the samples.

5. The Contractor shall maintain a bound sample log book. The Contractor shall provide the DDC access to it at all times and shall turn it over to the DDC in good condition at the completion of the work. The following information, as a minimum, shall be recorded to the log:

   a. Sample identification number

   b. Sample location

   c. Field observation

   d. Sample type

   e. Analyses

   f. Date/time of collection

   g. Collector's name

   h. Sample procedures and equipment used

   i. Date sent to laboratory/name of laboratory

6. Only dedicated sampling equipment may be used to collect these samples. All equipment involved in field sampling must be decontaminated before being brought to the site, and must be properly disposed of after use.

7. Samples shall be submitted to the Contractor's laboratory within the holding times for the parameters analyzed.

8. All analyses must be done by a laboratory that has received approval from the DOH's ELAP for the methods to be done. The Contractor must specify the laboratory in the WHP.

9. Analytical results for water discharged to the sewer and for off-site disposal must be submitted to the DDC no later than five (5) days after sample collection.

10. The City reserves the right to direct the Contractor to conduct alternative sampling in lieu of the parameters described above, if the situation warrants. The substitute sampling parameters shall be of equal or lesser monetary value than those described above, as determined by industry laboratory pricing standards.

8.01 W2.2 METHOD OF MEASUREMENT

Quantities for samples shall be measured as the number of sets of samples that are tested for the DEP Sanitary/Combined and Storm Sewer Effluent Limit concentrations. A set shall be defined as one (1) representative sample analyzed for the full range of DEP parameters as specified in attachment 1.

8.01 W2.3 PRICE TO COVER

The unit price bid per set for Item 8.01 W2 shall include the cost of furnishing all labor, materials, equipment, plan, and insurance for handling, transport, sampling, testing, documentation, permits, other incidentals necessary to complete the work of sampling and testing of contaminated water. Any additional costs incurred by the Contractor for sampling and testing of contaminated water shall be included in the bid price of this Item.

Payment will be made under:

ITEM NUMBER	ITEM	PAYMENT UNIT
8.01 W2	Sampling and Testing of Contaminated Water	Set

ATTACHMENT 1

New York City Department of Environmental Protection

Limitations for Discharge To Storm, Sanitary/Combined Sewer

NEW YORK CITY DEPARTMENT OF ENVIRONMENTAL PROTECTION
BUREAU OF WASTEWATER TREATMENT

Limitations for Effluent to Sanitary or Combined Sewers

Parameter[1]	Daily Limit	Units	Sample Type	Monthly Limit
Non-polar material[2]	50	mg/l	Instantaneous	---
pH	5-11	SU's	Instantaneous	---
Temperature	< 150	Degree F	Instantaneous	---
Flash Point	> 140	Degree F	Instantaneous	---
Cadmium	2 0.69	mg/l mg/l	Instantaneous Composite	--- ---
Chromium (VI)	5	mg/l	Instantaneous	---
Copper	5	mg/l	Instantaneous	---
Lead	2	mg/l	Instantaneous	---
Mercury	0.05	mg/l	Instantaneous	---
Nickel	3	mg/l	Instantaneous	---
Zinc	5	mg/l	Instantaneous	---
Benzene	134	ppb	Instantaneous	57
Carbontetrachloride	---	---	Composite	---
Chloroform	---	---	Composite	---
1,4 Dichlorobenzene	---	---	Composite	---
Ethylbenzene	380	ppb	Instantaneous	142
MTBE (Methyl-Tert-Butyl-Ether)	50	ppb	Instantaneous	---
Naphthalene	47	ppb	Composite	19
Phenol	---	---	Composite	---
Tetrachloroethylene (Perc)	20	ppb	Instantaneous	---
Toluene	74	ppb	Instantaneous	28
1,2,4 Trichlorobenzene	---	---	Composite	---
1,1,1 Trichloroethane	---	---	Composite	---
Xylenes (Total)	74	ppb	Instantaneous	28
PCB's (Total)[3]	1	ppb	Composite	---
Total Suspended Solids (TSS)	350[4]	mg/l	Instantaneous	---
CBOD[5]	---	---	Composite	---
Chloride[5]	---	---	Instantaneous	---
Total Nitrogen[5]	---	---	Composite	---
Total Solids[5]	---	---	Instantaneous	---
Other				

1 All handling and preservation of collected samples and laboratory analyses of samples shall be performed in accordance with 40 C.F.R. pt. 136. If 40 C.F.R. pt. 136 does not cover the pollutant in question, the handling, preservation, and analysis must be performed in accordance with the latest edition of "Standard Methods for the Examination of Water and Wastewater." All analyses shall be performed using a detection level less than the lowest applicable regulatory discharge limit. If a parameter does not have a limit, then the detection level is defined as the least of the Practical Quantitation Limits identified in NYSDEC's Analytical Detectability and Quantitation Guidelines for Selected Environmental Parameters, December 1988

2 Analysis for ***non-polar materials*** must be done by EPA method 1664 Rev. A. Non-Polar Material shall mean that portion of the oil and grease that is not eliminated from a solution containing N–Hexane, or any other extraction solvent the EPA shall prescribe, by silica gel absorption.

3 Analysis for PCB=s is required if ***both*** conditions listed below are met:
1) if proposed discharge ≥ 10,000 gpd;
2) if duration of a discharge > 10 days.
Analysis for PCB=s must be done by EPA method 608 with MDL=<65 ppt. PCB's (total) is the sum of PCB-1242 (Arochlor 1242), PCB-1254 (Arochlor 1254), PCB-1221 (Arochlor 1221), PCB-1232 (Arochlor 1232), PCB-1248 (Arochlor 1248), PCB-1260 (Arochlor 1260) and PCB-1016 (Arochlor 1016).

4 For discharge ≥ 10,000 gpd, the TSS limit is 350 mg/l. For discharge < 10,000gpd, the limit is determined on a case by case basis.

5 Analysis for Carbonaceous Biochemical Oxygen Demand (CBOD), Chloride, Total Solids and Total Nitrogen are required if proposed discharge ≥ 10,000 gpd.

ATTACHMENT 2

Applicable Regulations

Applicable regulations include, but are not limited to:

1. 49 CFR 100 to 179 - DOT Hazardous Materials Transport and Manifest System Requirements
2. New York State Department of Environmental Conservation (DEC), Spills Technology and Remediation Series (STARS) Memo #1
3. 6 NYCRR 360-1 DEC Solid Waste Management Facilities
4. 6 NYCRR 364- Waste Transporter permits
5. Local restrictions on transportation of waste/debris
6. 40 CFR 260 to 272 - Hazardous Waste Management (RCRA)
7. 6 NYCRR 371 - Identification and Listing of Hazardous Wastes
8. 6 NYCRR 372 - Hazardous Waste Manifest System and Related Standards for Generators, Transporters and Facilities
9. 6 NYCRR 373-1 - Hazardous Waste Treatment, Storage and Disposal Facility Permitting Requirements
10. 6 NYCRR 376 - Land Disposal Restrictions
11. Posted weight limitations on roads or bridges
12. Transportation Skills Programs, Inc. 1985 - Hazardous Materials and Waste Shipping Papers and Manifests
13. Other local restrictions on transportation of waste/debris
14. Occupational Safety and Health Administration (OSHA), Standards and Regulations, 29 CFR 1910 (General Industry)
15. OSHA 29 CFR 1910.120 Hazardous Waste Operations and Emergency Response
16. OSHA Safety and Health Standards 29 CFR 1926 (Construction Industry)
17. OSHA 29 CFR 1910.146 Confined Space Entry Standard
18. Standard Operating Safety Guidelines, EPA Office of Emergency and Remedial Response Publication, 9285.1-03
19. NIOSH / OSHA / USCG / EPA Occupational Safety and Health Guidance Manual for Hazardous Waste Site Activities (1986)
20. U.S. Department of Health and Human Services (DHHS) "NIOSH Sampling and Analytical Methods," DHHS (NIOSH) Publication 84-100
21. ANSI, Practice for Respiratory Protection, Z88.2 (1980)
22. ANSI, Emergency Eyewash and Shower Equipment, Z41.1 (1983)
23. ANSI, Protective Footwear, Z358.1 (1981)
24. ANSI, Physical Qualifications for Respirator Use, Z88.6 (1984)
25. ANSI, Practice for Occupational and Educational Eye and Face Protection, Z87.1 (1968)
26. Water Pollution Control Federation "Manual of Practice No. 1, Safety in Wastewater Works"

27. NFPA No. 327 "Standard Procedures for Cleaning and Safeguarding Small Tanks and Containers"
28. Occupational Safety and Health Act Confined Space Entry Standard 29 CFR 1910.146.87
29. Department of Transportation 49 CFR 100 through 179
30. Department of Transportation 49 CFR 387 (46 FR 30974, 47073)
31. Environmental Protection Agency 40 CFR 136 (41 FR 52779)
32. Environmental Protection Agency 40 CFR 262 and 761
33. Resource Conservation and Recovery Act (RCRA)
34. Any transporter of hazardous or non-hazardous materials shall be licensed in the State of New York and all other states traversed in accordance with all applicable regulations.

ATTACHMENT 3

Definitions

Contaminated Groundwater and Decontamination Fluids: Groundwater within the excavation trench or decontamination water that contains regulated compounds above the NYCDEP Discharge to Sanitary/Combined Sewer Effluent limits.

Disposal or Treatment Facility: A facility licensed to accept either non-hazardous regulated waste or hazardous waste for either treatment or disposal.

Exclusion Zone: Work area that will be limited to access by Contractor personnel specifically trained to enter the work area only. The exclusion zone will be set up to secure the area from the public and untrained personnel. The project health and safety program will apply to all construction personnel including persons entering the work area.

Hazard Assessment: An assessment of any physical hazards that may be encountered on a work site.

Hazardous Soils: Soils that exhibit any of the characteristics of a hazardous waste, namely ignitability, corrosivity, reactivity, and toxicity, as defined in 6 NYCRR Part 371, Section 371.3 and 40 CFR Section 261.

Hazardous Substance Evaluation: An evaluation of the possible or known presence of any hazardous substances that may be encountered on a job site. This evaluation is included in the Health and Safety Plan and will include the identification and description of any hazardous substances expected to be encountered. Material Safety Data Sheets (MSDS) will be included for each substance.

Health and Safety Plan: A plan employed at a work site that describes all the measures that will be taken to assure that all work is conducted in a safe manner, and that the health of the workers and the public will be insured.

Material Handling Plan: A plan outlining the methods that will be employed to handle, transport and dispose of contaminated materials.

Non-Hazardous Contaminated Soils: Soils which exhibit a distinct chemical or petroleum odor, or exhibit elevated photoionization detector readings but are not classified as hazardous waste under 6 NYCRR Part 371, Section 371.3 and 40 CFR Section 261.

New York State Health Department's Environmental Laboratory Approval Program: A program by which the state of New York approves and accredits environmental testing laboratories.

PCBs: Polychlorinated biphenyls are a group of toxic compounds commonly used as a coolant in transformers and other electrical components.

Photoionization Detector: A hand held instrument used to measure volatile organic compounds in air. The instrument ionizes the organic molecules through the use of an ultraviolet lamp.

RCRA Hazardous Waste Characteristics: Characteristics of a material which may indicate the material is hazardous. These include: ignitability corrosivity, reactivity, and toxicity.

Total Petroleum Hydrocarbons: An analytical procedure used to determine the total amount of petroleum compounds in a material.

ATTACHMENT 4

Phase II Subsurface Corridor Investigation Report

(NO TEXT ON THIS PAGE)

- Final -

Phase II Subsurface Corridor Investigation Report

For

GRAND CONCOURSE PHASE 3

GRAND CONCOURSE FROM EAST 171ST STREET TO EAST 175TH STREET

BRONX, NY

DDC PROJECT NO. HWXP136B

WORK ORDER NO. 10806-LIRO-3-10058

CONTRACT REGISTRATION NO. 20151405569

Prepared for:

NYC DDC Department of Design and Construction

Office of Environmental and Geotechnical Services

30-30 Thomson Avenue, Third Floor

Long Island City, New York 11101

Prepared by:

LiRo Engineers, Inc.

703 Lorimer Street

Brooklyn, New York 11211

PROJECT NO. 15-008-0265

March 22, 2016

TABLE OF CONTENTS

EXECUTIVE SUMMARY **ES-1**

1.0 INTRODUCTION **1**

1.1 SUMMARY OF PREVIOUS ENVIRONMENTAL INVESTIGATIONS 1

1.2 SCOPE OF WORK 3

2.0 CORRIDOR INFORMATION **4**

2.1 CORRIDOR LOCATION, DESCRIPTION AND USE 4

2.2 DESCRIPTION OF SURROUNDING PROPERTIES 4

2.3 CORRIDOR AND REGIONAL TOPOGRAPHIC SETTING 4

2.4 CORRIDOR AND REGIONAL GEOLOGY 4

2.5 CORRIDOR AND REGIONAL HYDROGEOLOGY 5

3.0 CORRIDOR EVALUATION **7**

3.1 SOIL QUALITY INVESTIGATION 7

3.2 GROUNDWATER QUALITY INVESTIGATION 8

3.3 LABORATORY ANALYSES 8

3.4 DATA EVALUATION 8

4.0 FINDINGS **9**

4.1 FIELD SCREENING 9

4.2 SOIL AND GROUNDWATER LABORATORY ANALYTICAL RESULTS 9

4.2.1 Volatile Organic Compounds (VOCs) in Soil 9

4.2.2 Polycyclic Aromatic Hydrocarbons (PAHs) in Soil 9

4.2.3 Polychlorinated Biphenyls (PCBs) in Soil 9

4.2.4 Toxicity Characteristic Leaching Procedure (TCLP) Resource Conservation and Recovery Act (RCRA) Metals in Soil 9

4.2.5 Waste Characterization of Soil 9

4.2.6 Analysis of NYCDEP Parameters in Groundwater 10

5.0 CONCLUSIONS AND RECOMMENDATIONS **11**

6.0 STATEMENT OF LIMITATIONS **13**

Tables
1 Summary of Environmental Boring Data
2 Summary of TCL VOCs Detected in Soil
3 Summary of PAHs Detected in Soil
4 Summary of PCBs Detected in Soil
5 Summary of Waste Characteristics Detected in Soil

Figures
1 Topographic Corridor Location Map
2 Sample Location Plan

Appendices
A Boring Location Sketches
B Geologic Boring Logs
C Laboratory Analytical Results – Included on Attached CD

EXECUTIVE SUMMARY

On behalf of the New York City Department of Design and Construction (NYCDDC), LiRo Engineers, Inc. (LiRo) conducted a Phase II Subsurface Corridor Investigation (Phase II SCI) of the Grand Concourse Corridor located between East 171st Street and East 175th Street (hereinafter referred to as the Corridor). The Corridor is approximately 2,750 feet long and is located in the Mount Hope, Mount Eden, and Claremont neighborhoods of Bronx, New York.

LiRo prepared a Phase I Corridor Assessment Report (CAR) dated July 14, 2015, which presented the results of a survey conducted along the Corridor to assess the presence of potential sources of subsurface contamination within, and in the immediate vicinity of, the Corridor. The Phase I CAR identified two (2) sites that had a potential "High" risk and 48 sites that had a potential "Moderate" risk to impact the subsurface (soil and/or groundwater) of the Corridor and recommended the performance of a Phase II SCI. The objective of the Phase II SCI was to assess the presence of subsurface contamination that may potentially impact proposed construction activities. The proposed construction activities for the Corridor include infrastructure improvements consisting of resurfacing of main roads and extensive reconstruction of service roads and medians. A series of raised medians and other roadway enhancements including pedestrian safety islands on the main road, bicycle lane with buffers, bollards, and standard street lighting will be added. Additionally, the replacement and rehabilitation of combined sewer is being proposed in the Corridor. The depth of excavation for the work ranges approximately from 13 to 26 feet with an average of 14 feet below grade (ftbg). The Phase II SCI consisted of the following components:

- The advancement of 10 borings (SB-01 through SB-10) to a terminal depth of 12 feet below grade surface (ftbg) unless refusal was encountered sooner (i.e., SB-01 through SB-10) and the field screening of soil samples, including photo-ionization detector (PID) readings and visual and olfactory indicators of contamination (staining, odors);

- The collection of 10 soil samples which were analyzed for the following parameters: (1) United States Environmental Protection Agency (USEPA) Target Compound List (TCL) volatile organic compounds (VOCs); (2) Polycyclic Aromatic Hydrocarbons (PAHs) via USEPA Method 8270C; (3) TCL polychlorinated biphenyls (PCBs); Total Petroleum Hydrocarbon (TPHC) Diesel Range Organics/Gasoline Range Organics (TPHC DRO/GRO); Resource Conservation and Recovery Act (RCRA) Characteristics; and, Toxicity Characteristic Leaching Procedure (TCLP) RCRA Metals; and,

- The preparation of this report, which includes tables summarizing the laboratory analytical results and figures depicting boring locations, significant site features and, if applicable, contamination occurrence and distribution.

In order to evaluate the subsurface soil quality, laboratory analytical results were compared with the regulatory standards identified in (1) New York State Department of Environmental Conservation (NYSDEC) Subpart 375-6: Remedial Program Unrestricted and Restricted Use (Track 1 and Track 2) Soil Cleanup Objectives (SCOs); (2) NYSDEC CP-51 Soil Cleanup Levels (SCLs) which include Supplemental Soil Cleanup Objectives (SSCOs) to NYSDEC Subpart 375-6 and SCLs for gasoline/fuel oil contaminated soil; and/or (2) Toxicity Characteristic Regulatory Levels for Hazardous Waste published in RCRA and 6 New York City Code for Rules and Regulation (NYCRR) Part 371.

The subsurface soils encountered during this Phase II SCI consisted predominantly of brown to yellow-brown fine to coarse sand, with little gravel, and occasional silt from grade to 7 ftbg. The proposed depth of 12 ftbg for the borings was not achieved due to the presence shallow bedrock. Bedrock and/or boulders were encountered at depths ranging from 1 ftbg to 7 ftbg within the Corridor. Groundwater was not encountered at any of the boing locations within the Corridor.

Field screening did not identify any visual or olfactory evidence of impacts or elevated PID readings within the soil borings.

VOCs were reported in five (5) of the 10 grab soil samples collected. Methylene Chloride was reported at a concentration above the Unrestricted Use (Track 1) SCO in one (1) of the 10 grab samples collected (SB-05). Methylene Chloride is a common laboratory cross contaminant and is most likely not representative of subsurface conditions. PAHs were reported in eight (8) of the 10 composite soil samples collected. Benzo(a)anthracene, Benzo(a)pyrene, Benzo(b)fluoranthene, and Chrysene were detected at concentrations exceeding Unrestricted Use (Track 1) SCOs, Restricted Use (Track 2) Residential SCOs, and the CP-51 SCLs in three (3) of the 10 composite samples collected (SB-04, SB-05, and SB-08). Benzo(k)fluoranthene, Dibenz(a,h)anthracene, and Indeno(1,2,3-cd)pyrene were detected at concentrations exceeding Unrestricted Use (Track 1) SCOs, Restricted Use (Track 2) Residential SCOs, and the CP-51 SCLs in two (2) of the 10 composite samples collected (SB-04 and SB-08). PCBs were not detected in any of the 10 composite soil samples collected. TCLP RCRA metals were reported in each of the 10 composite samples collected at concentrations below the applicable RCRA standards. TPHC-DRO was reported in nine (9) of the 10 composite samples collected. Concentrations ranged from 17 to 560 milligrams per kilogram (mg/kg). There is no regulatory standard for TPHC-DRO.

Conclusions and Recommendations

Based on the evaluation of the field screening data and the laboratory analytical results, and a comparison to applicable regulatory standards, the following conclusions are presented:

- Field screening did not identify any visual or olfactory evidence of impacts or PID readings within the soil borings;
- Laboratory analytical results identified petroleum-impacted soils within the composite samples collected from eight (8) of the 10 soil borings. The presence of concentrations of petroleum components (i.e., PAHs and TPHC-DRO) in subsurface soils is attributed primarily to: (a) residuals from releases of petroleum products from the "High" and "Moderate" risk sites identified on and in the vicinity of the Corridor; and/or (b) contaminants in historic fill material placed on the Corridor;
- Due to the shallow nature of the borings, groundwater was not encountered. Therefore, no groundwater samples were collected; and,
- The subsurface soil samples collected did not exhibit hazardous waste characteristics.

Based on the results of the field investigation and laboratory analytical results, LiRo recommends the following:

- The Contract documents should identify provisions and a contingency for managing, handling, transporting and disposing of non-hazardous, petroleum contaminated soil. The Contractor should be

required to submit a Material Handling Plan, to identify the specific protocol and procedures that will be employed to manage the waste in accordance with applicable regulations;

- Dust control procedures are recommended during excavation activities to minimize the creation and dispersion of fugitive airborne dust. The Contractor may implement dust control measures to minimize potential airborne contaminants released as a direct result of construction activities. A Community Air Monitoring Plan (CAMP) is recommended in accordance with NYSDEC DER-10 Regulations. The CAMP requires real-time monitoring for VOCs and particulates (i.e., dust) at the downwind perimeter of each designated work area when certain activities are in progress at contaminated sites. The CAMP is intended to provide a measure of protection for the downwind community from potential airborne contaminant releases as a direct result of investigative and remedial work activities. Specific requirements shall be reviewed for each situation in consultation with NYSDOH to ensure proper applicability;

- While groundwater was not encountered during the Phase II SCI field activities, groundwater may be encountered during the excavation work therefore requiring dewatering. Should dewatering be necessary during construction activities within the Corridor, the contractor should be required to obtain NYCDEP sewer discharge permit;

- In addition, if discharge into storm sewers (which ultimately discharge to surface waters) is required during dewatering, it may be performed under the appropriate NYSDEC State Pollutant Discharge Elimination System (SPDES) permit. Additional sampling and laboratory analysis may be required to satisfy NYSDEC requirements; and,

- Before beginning any excavation activity, the contractor shall submit a Corridor-specific health and safety plan (HASP) that will meet the requirements set forth by the Occupational, Safety and Health Administration (OSHA), the New York State Department of Health (NYSDOH) and any other applicable regulations. The HASP should identify the possible locations and risks associated with the potential contaminants that may be encountered, and the administrative and engineering controls that will be utilized to mitigate concerns (i.e., dust control procedures for PAHs).

1.0 INTRODUCTION

On behalf of the New York City Department of Design and Construction (NYCDDC), LiRo Engineers, Inc. (LiRo) conducted a Phase II Subsurface Corridor Investigation (Phase II SCI) of the Grand Concourse Corridor located between East 171st Street and East 175th Street (hereinafter referred to as the Corridor). The Corridor is approximately 2,750 feet long and is located in the Mount Hope, Mount Eden, and Claremont neighborhoods of Bronx, New York. Infrastructure improvements consisting of resurfacing of main roads and extensive reconstruction of service roads and medians are proposed for the Corridor. Additionally, the replacement and rehabilitation of combined sewer is being proposed in the Corridor. The depth of excavation for the work ranges approximately from 13 to 26 feet with an average of 14 feet below grade (ftbg). The Phase II SCI was conducted to determine if the Corridor's environmental condition might impact proposed construction activities.

1.1 Summary of Previous Environmental Investigations

LiRo prepared a Phase I Corridor Assessment Report (Phase I CAR) dated July 14, 2015, which presented the results of a survey conducted along the Corridor to assess the presence of potential sources of subsurface contamination within, and in the immediate vicinity of, the Corridor. The survey also included a review of fire insurance maps to document historical use and a limited review of the New York State databases to identify sites that are known to be contaminated.

The Phase I CAR identified two (2) sites that had a Final "High" risk and 48 sites that had a Final "Moderate" risk to impact the subsurface of the Corridor and recommended advancing a total of 10 borings and collecting soil samples to assess potential impacts.

HIGH RISK SITES

1) Con Edison/NYNEX/Vault No. TM877, 1775 Grand Concourse (High Risk Site No. 1)
2) Bronx-Lebanon Hospital Center/Nalco Co., 1650 Grand Concourse/1650 Selwyn Avenue (High Risk Site No. 2)

MODERATE RISK SITES

1) Roadway, 175th St. and Grand Concourse (Moderate Risk Site No. 1)
2) GC 1770, LLC, Apartments, 1770 Grand Concourse / Concourse One Co., 1780 Grand Concourse (Moderate Risk Site No. 2)
3) Lewis Morris Apartment, 1749 Grand Concourse (Moderate Risk Site No. 3)
4) Concourse Properties, Apartments, 1750 Grand Concourse (Moderate Risk Site No. 4)
5) Mario and Lucia Milevo, Apartments, 1695 Grand Concourse (Moderate Risk Site No. 5)
6) Esrog Realty, Ltd., Apartments, 1665 Grand Concourse (Moderate Risk Site No. 6)
7) GC 1700, LLC, Apartments, 1700 Grand Concourse (Moderate Risk Site No. 7)
8) Apartments, 1692 Grand Concourse (Moderate Risk Site No. 8)
9) Apartments, 1675 Realty Co., 1675 Grand Concourse (Moderate Risk Site No. 9)
10) Apartments, 1684-1686 Grand Concourse (Moderate Risk Site No. 10)
11) Apartments, 1575 GC, LLC, 1575 Grand Concourse (Moderate Risk Site No. 11)
12) Equities by Andrea, LLC, Apartments, 1645 Grand Concourse (Moderate Risk Site No. 12)
13) 187 Concourse Associates, Apartments, 1560 Grand Concourse (Moderate Risk Site No. 13)
14) Apartments, 1565 Grand Concourse (Moderate Risk Site No. 14)
15) Apartment House, 1555 Grand Concourse (Moderate Risk Site No. 15)

16) Garage and Repair Facility, 1526 Grand Concourse and 1539 Sheridan Ave. (Moderate Risk Site No. 16)
17) Apartments, 1520 Grand Concourse (Moderate Risk Site No. 17)
18) Con Edison, 1500 Grand Concourse (Moderate Risk Site No. 18)
19) Apartments, 1515 Grand Concourse (Moderate Risk Site No. 19)
20) Apartments, 1505 Concourse One Co., 1780 Grand Concourse (Moderate Risk Site No. 20)
21) Apartment Building/Con Edison, 1466 Grand Concourse (Moderate Risk Site No. 21)
22) Roosevelt Gardens, 1475 Grand Concourse/NY Spill, 1491 Grand Concourse/1506 Wythe Ave. (Moderate Risk Site No. 22)
23) Apartments, 1460 Grand Concourse (Moderate Risk Site No. 23)
24) Apartment House, 1454 Grand Concourse (Moderate Risk Site No. 24)
25) Service Box 8963/TM-502/Transformer 502, East 171st St. and Grand Concourse / NYC Transit Bus, Grand Concourse and East 171st St. (Moderate Risk Site No. 25)
26) 1420 Grand Concourse Realty, LLC, 1420 Grand Concourse (Moderate Risk Site No. 26)
27) Apartments, 1777 Grand Concourse / Manhole No. 8170/MTA NYCT - Structural Steel Pipe, 117 East 175th St. (Moderate Risk Site No. 27)
28) French Way Cleaners, 101 East Mount Eden Ave. (Moderate Risk Site No. 28)
29) H&C Cleaners/R&R Dry Cleaners, 217 East 170th St. (Moderate Risk Site No. 29)
30) Apartments, 152-156 171st St. (Moderate Risk Site No. 30)
31) Apartments, 1414-1416 Wythe Pl. (Moderate Risk Site No. 31)
32) Apartments, 211 East 170th St. (Moderate Risk Site No. 32)
33) Z&Z Laundromat, 165 East 170th St. (Moderate Risk Site No. 33)
34) Super Laundromat, 1402-1406 Wythe Pl. (Moderate Risk Site No. 34)
35) Parking Garage, 1750 Morris Ave. (Moderate Risk Site No. 35)
36) Echo Place, Inc., 1706 Selwyn Ave. (Moderate Risk Site No. 36)
37) Apartments, 1711 Morris Ave. (Moderate Risk Site No. 37)
38) Apartments, 1629-1631 Walton Ave. (Moderate Risk Site No. 38)
39) Charnol Realty Corp., Apartments, 1530 Sheridan Ave. (Moderate Risk Site No. 39)
40) Apartments, 1510 Sheridan Ave. (Moderate Risk Site No. 40)
41) William H. Taft High School, 240 East 172nd St. (Moderate Risk Site No. 41)
42) Apartments, 1401 Grand Concourse (Moderate Risk Site No. 42)
43) Howard J. Kaplow Realty/Con Edison, 1398 Grand Concourse (Moderate Risk Site No. 43)
44) Apartments, 1815 Morris Realty Co., 1815 Morris Ave. (Moderate Risk Site No. 44)
45) Apartments, 1780 Eastburn LP, 1789 Eastburn Ave. (Moderate Risk Site No. 45)
46) Apartments, Grand Concourse Holding, 1819 Weeks Ave. (Moderate Risk Site No. 46)
47) Apartments, 1824 Weeks Ave. (Moderate Risk Site No. 47)
48) BP Gas Station, 2-16 East 175th St. and 1740 Jerome Ave. (Moderate Risk Site No. 48)

1.2 Scope of Work

The Phase II SCI consisted of a field investigation, laboratory analyses, and the preparation of this report, which includes tables summarizing the laboratory analytical results and figures depicting boring locations, significant site features and, if applicable, contamination occurrence and distribution. Drilling activities for the field investigation were performed by Associated Environmental Services, Ltd. (AES) of Hauppauge, New York. Oversight of drilling activities was performed by LiRo. Laboratory analyses were provided by Con-Test Analytical Laboratory (Con-Test), of East Longmeadow, Massachusetts, a NYS Department of Health (NYSDOH) approved laboratory (No. 10899). Field derived Quality Assurance/Quality Control (QA/QC) samples (i.e., field blanks, trip blanks, and duplicates) were not collected for this project. The field investigation was conducted on February 11 and 12, 2016 and consisted of the following components.

- The advancement of 10 borings (SB-01 through SB-10) to a terminal depth of 12 feet below grade surface (ftbg) unless refusal was encountered sooner (i.e. SB-01 through SB-10). The borings were hand cleared to their terminal depth using a hand auger and/or a vacuum excavator. Soil samples were collected using disposable spoons. In addition, a Corridor specific Health and Safety Plan was prepared prior to commencing field work.

- Field screening, classification, and identification of soils from the ground surface to the bottom of each boring. Soil samples were visually classified in the field using the Unified Soil Classification System (USCS). Field screening consisted of visual and olfactory indicators of impacts as well as screening with a photoionization detector (PID).

- The collection of one (1) composite and one (1) grab sample from the 10 soil boring locations (SB-01 through SB-10). The composite samples were comprised of soil from the entire boring column. The grab samples were collected from the bottom 6-inch interval in each boring.

- Laboratory analysis of the composite samples for: (1) Polycyclic Aromatic Hydrocarbons (PAHs) via United States Environmental Protection Agency (USEPA) Method 8270C; (2) Polychlorinated Biphenyls (PCBs) via USEPA Method 3550B/8082; (3) Total Petroleum Hydrocarbon (TPHC) Diesel Range Organics/Gasoline Range Organics (DRO/GRO) via USEPA Method 8015B; (4) Resource Conservation and Recovery Act (RCRA) Characteristics via USEPA SW-846; and, (5) Toxicity Characteristic Leaching Procedure (TCLP) RCRA Metals via USEPA SW-846.

- Laboratory analysis of the grab samples for target compound list (TCL) volatile organic compounds (VOCs) by USEPA Method 8260.

2.0 CORRIDOR INFORMATION

2.1 Corridor Location, Description and Use

The Corridor is located in the Mount Hope, Mount Eden, and Claremont neighborhoods of Bronx, New York. The Corridor is approximately 2,750 feet long and consists of Grand Concourse between East 171st Street and East 175th Street. The location is shown on Figure 1.

The Corridor is characterized primarily by residential and commercial use. Specific properties of concern that were identified along the Corridor include the following:

- Bronx-Lebanon Hospital Center/Nalco Co., 1650 Grand Concourse/1650 Selwyn Avenue (High Risk Site No. 2)
- Garage and Repair Facility, 1526 Grand Boulevard and 1539 Sheridan Avenue (Moderate Risk Site No. 16)

2.2 Description of Surrounding Properties

The area surrounding the Corridor is characterized primarily by mixed residential and commercial properties. Specific properties of concern that were identified surrounding the Corridor include the following:

- French Way Cleaners, 101 East Mount Eden Avenue (Moderate Risk Site No. 28)
- H&C Cleaners/R&R Dry Cleaners, 217 East 170th Street (Moderate Risk Site No. 29)
- Z&Z Laundromat, 165 East 170th Street (Moderate Risk Site No. 33)
- Super Laundromat, 1402-1406 Wyth Place (Moderate Risk Site No. 34)
- Parking Garage, 1750 Morris Avenue (Moderate Risk Site No. 35)
- Echo Place, Inc., 1706 Selwyn Avenue (Moderate Risk Site No. 36)
- William H. Taft High School, 240 East 172nd Street (Moderate Risk Site No. 41)
- BP Gas Station, 2-16 East 175th Street and 1740 Jerome Avenue (Moderate Risk Site No. 48)

2.3 Corridor and Regional Topographic Setting

LiRo reviewed the United States Geologic Survey (USGS) 7.5-minute Topographic Quadrangle Maps for Central Park, New York (1979) to determine topography at the Corridor. The Corridor exhibits a vertical elevation change of approximately 50 feet along the length of the Corridor. The approximate elevation of the Corridor ranges from 64 feet above mean sea level (amsl) on the northern end by the East 175th Street portion of the Corridor to 112 feet amsl by the Hawkstone Street portion of the Corridor, to 102 feet amsl on the southern end by the East 171st Street portion of the Corridor. Surface runoff along the Corridor areas north of the Mount Eden Parkway is expected to follow a northerly slope; surface runoff along the Corridor areas south of the Mount Eden Parkway is expected to follow a westerly slope.

2.4 Corridor and Regional Geology

Corridor and regional geology and hydrogeology are based on information provided in the Geologic Map of New York State (Lower Hudson Sheet) and the USGS "Hydrogeologic Framework of Long Island, New York." Based on these sources, the area is underlain by high grade metamorphic bedrock consisting

of a Fordham Gneiss, Inwood Marble and Manhattan Group, which includes two (2) different kinds of schist (amphibole schist and mica schist). Bedrock is extensively exposed on the west side and northern quarter of Bronx County and less exposed southeast towards Hunts Point and Throgs Neck.

The geologic contacts display a series of northwest trending folds. The northwest trending folds have resulted in a series of northwest trending valleys and ridges. The bedrock is also characterized by numerous steeply dipping northwest-southeast trending normal and reverse faults many of which are transmissive and contain groundwater.

Pleistocene glacial and glaciofluvial sediments as well as recent river, alluvium, and salt marsh deposits overlie the bedrock. Glacial till in the south Bronx varies in thickness from less than 5 feet to over 100 feet and averages about 25 feet. Inter-bedded lake bed sediments are usually encountered in the south Bronx along the Harlem River Valley and the Bronx shore inland to Sedgwick Avenue at approximately 20 feet below grade surface (ftbg). Thickness of these sediments ranges from 7 to 20 feet. They are generally underlain by stratified sand, clay, and gravel, also with a thickness of 7 to 20 feet. The glacial tills underlying these lakebed sediments generally overlie eroded and decomposed bedrock.

In places, deep valleys were gouged out of the Bronx by glacial activity. These valleys were subsequently filled with organic material and glacial sediments. In many places in the Bronx, as much as 30 feet of artificial fill material (construction and demolition debris mixed with sand, gravel, rock, and cinders) overlies Holocene salt marsh and alluvial deposits, Pleistocene glacial drift, or bedrock.

The subsurface soils encountered during this Phase II SCI consisted primarily of yellowish-brown medium to coarse sand with mica fragments and little silt. Bedrock or boulders were encountered at depths ranging 1 to 7 ftbg) throughout the corridor. Recovered bedrock fragments were composed of mica schist. Groundwater was not encountered within any of the on-site borings.

2.5 Corridor and Regional Hydrogeology

The nearest surface water body to the Corridor is the Harlem River, which is located approximately 5,450 feet west of the Corridor.

Groundwater generally occurs within the unconsolidated sediments. Groundwater also occurs in bedrock within secondary permeability zones, such as fractures, faults, and foliation planes. Regional groundwater flow direction is generally controlled by regional topography with groundwater flow from higher to lower elevations. Based on the Corridor topography, groundwater flow direction in the area of both Corridors is anticipated to be southeast. Estimated groundwater levels and/or flow direction(s) may vary due to seasonal fluctuations in precipitation, local usage demands, geology, underground structures, or dewatering operations. Based on the topographic mapping, groundwater is anticipated to be present at depths greater than 20 ftbg along the Corridor.

Based upon information supplied by Environmental Data Resources, Inc. (EDR) of Shelton, Connecticut in the Radius Map Report, the Corridor does not fall within a state or national wetland area. The closest National Wetlands are identified within the view limits of the Overview Maps in the EDR reports as being located nearly 1 mile west of the Corridor and the closest State Regulated Wetlands are identified as being located nearly 1 mile east. No identifying information relative to the names of these mapped wetlands was identified within the EDR report.

Based upon information supplied within the EDR Radius Map Report, the Corridor does not lie within the 100 or 500 year flood zone based on the EDR report. The closest flood zones include both 100 and 500 year flood zones and are located approximately 1 mile west of the Corridor. No identifying information relative to the Flood Insurance Rate Map (FIRM) panel was identified within the EDR report.

3.0 CORRIDOR EVALUATION

Proposed construction activities at this Corridor include soil excavation, which in-turn requires that soils at the Corridor be characterized to identify material handling requirements (i.e., use of protective equipment) and for material reuse, handling, and/or waste disposal requirements. LiRo provided oversight for the advancement of 10 soil borings and the collection of soil samples during the field investigation at the designated areas in the vicinity of the planned construction. The soil samples from the borings were transferred into laboratory supplied sample jars and properly labeled. The samples were stored with ice in a cooler to preserve the samples at 4° Celsius prior to and during shipment. A chain-of-custody was prepared prior to sample shipment. A summary of the field observations, including the location of the sites and the details of the soil borings, is provided in Table 1.

3.1 Soil Quality Investigation

10 borings (SB-01 through SB-10) were advanced to a terminal depths ranging from 1 to 7 ftbg using a hand auger, vacuum excavator, and/or air knife. Soil samples were collected directly from the borehole using disposable spoons. Soil boring locations are shown on Figure 2. The designations and sampling intervals for the samples that were submitted to the laboratory are included in Table 1. Maps depicting each boring location are included in Appendix A. Boring logs are provided in Appendix B. The locations of each boring are described below:

- **SB-01** – Advanced in the vicinity of "High" risk site No. 1 and located on Clifford Place, 50 feet west of Walton Avenue and 4 feet south of south curb.
- **SB-02** – Advanced in the vicinity of "High" risk site No. 2 and located on East 173rd Street, 41 feet east of Grand Concourse and 4.5 feet south of south curb.
- **SB-03** – Advanced in the vicinity of "Moderate" risk site Nos. 12 and 28 and located on Mt. Eden Avenue, 77.5 feet west of Grand Concourse and 5 feet south of south curb.
- **SB-04** – Advanced in the vicinity of "Moderate" risk site No. 13 and located on Mt. Eden Parkway, 71 feet east of Grand Concourse and 4.5 feet south of south curb.
- **SB-05** – Advanced in the vicinity of "Moderate" risk site Nos. 14 and 15 and located on Hawkstone Street, 77.5 feet west of Grand Concourse and 4 feet north of north curb.
- **SB-06** – Advanced in the vicinity of "Moderate" risk site Nos. 15 and 19 and located on Rockwood Street, 53.3 feet west of Grand Concourse and 5.6 feet south of south curb.
- **SB-07** – Advanced in the vicinity of "Moderate" risk site Nos. 20 and 22 and located on East 172nd Street, 60 feet west of Grand Concourse and 5 feet north of north curb.
- **SB-08** – Advanced in the vicinity of "Moderate" risk site Nos. 18 and 21 and located on East 172nd Street, 62.6 feet east of Grand Concourse and 3 feet north of north curb.
- **SB-09** – Advanced in the vicinity of "Moderate" risk site Nos. 22, 25, and 30 and located on East 171st Street, 46.5 feet west of Grand Concourse and 5.5 feet north of north curb.

- **SB-10** – Advanced in the vicinity of "Moderate" risk site Nos. 24, 26, and 41 and located on East 171st Street, 75 feet east of Grand Concourse and 5 feet north of north curb.

Soil from each boring was classified and examined for visual evidence (i.e., staining, discoloration) and any olfactory indications (i.e., odors) of contamination. Continuous soil samples were collected from each of the borings during advancement. Upon sample retrieval, the soils were examined for visual evidence (i.e., staining, discoloration) and any olfactory indications (i.e., odors) of contamination. In addition, a PID was used to screen the soil for VOC vapors.

In order to identify representative conditions relative to the presence of PAHs, PCBs, TPHC DRO/GRO, RCRA Characteristics, and TCLP RCRA metals over the entire soil column in each boring, composite soil samples were collected by mixing the soil from the entire column in a stainless steel bowl. Boring composite samples were collected from the borings (SB-01 through SB-10).

In order to identify representative conditions relative to the presence of VOCs, grab soil samples were collected the bottom 6-inch interval of each boring.

3.2 Groundwater Quality Investigation

Due to the shallow nature of the borings, groundwater was not encountered. Therefore, no groundwater samples were collected.

3.3 Laboratory Analyses

The soil samples were submitted to Con-Test, a NYSDOH approved laboratory (No. 10899). Field derived QA/QC samples (i.e., field blank, trip blank, duplicate) were not collected for this project. Laboratory analytical reports are included in Appendix C.

The grab soil samples were analyzed for USEPA TCL VOCs by Method 8260. The boring composite soil samples were analyzed for: PAHs via USEPA Method 8270C; (2) PCBs via USEPA Method 3550B/8082; (3) TPHC DRO/GRO via USEPA Method 8015B; (4) RCRA Characteristics via USEPA SW-846; and, (5) TCLP RCRA Metals via USEPA SW-846.

3.4 Data Evaluation

In order to evaluate the subsurface soil quality, laboratory analytical results were compared with the regulatory standards identified in (1) New York State Department of Environmental Conservation (NYSDEC) Subpart 375-6: Remedial Program Unrestricted and Restricted Use (Track 1 and Track 2) Soil Cleanup Objectives (SCOs); (2) NYSDEC CP-51 Soil Cleanup Levels (SCLs) which include Supplemental Soil Cleanup Objectives (SSCOs) to NYSDEC Subpart 375-6 and SCLs for gasoline/fuel oil contaminated soil; and/or (2) Toxicity Characteristic Regulatory Levels for Hazardous Waste published in RCRA and 6 New York City Code for Rules and Regulation (NYCRR) Part 371.

4.0 FINDINGS

This section discusses the analytical data and findings for the activities discussed in Section 3.0. Boring logs can be found in Appendix B. Complete analytical data reports are included in Appendix C.

4.1 Field Screening

Field screening did not identify any visual or olfactory evidence of impacts or elevated PID readings within the soil borings. Refer to Table 1 for a summary of environmental boring data.

4.2 Soil and Groundwater Laboratory Analytical Results

4.2.1 Volatile Organic Compounds (VOCs) in Soil

VOCs were reported in five (5) of the 10 grab soil samples collected. Methylene Chloride was reported at a concentration above the Unrestricted Use (Track 1) SCO in one (1) of the 10 grab samples collected (SB-05). Methylene Chloride is a common laboratory cross contaminant and is most likely not representative of subsurface conditions. With the exception of Methylene Chloride, no VOCs were reported in any of the 10 grab samples collected. Refer to Table 2 for a summary of TCL VOC detections.

4.2.2 Polycyclic Aromatic Hydrocarbons (PAHs) in Soil

PAHs were reported in eight (8) of the 10 composite soil samples collected. Benzo(a)anthracene, Benzo(a)pyrene, Benzo(b)fluoranthene, and Chrysene were detected at concentrations exceeding Unrestricted Use (Track 1) SCOs, Restricted Use (Track 2) Residential SCOs, and the CP-51 SCLs in three (3) of the 10 composite samples collected (SB-04, SB-05, and SB-08). Benzo(k)fluoranthene, Dibenz(a,h)anthracene, and Indeno(1,2,3-cd)pyrene were detected at concentrations exceeding Unrestricted Use (Track 1) SCOs, Restricted Use (Track 2) Residential SCOs, and the CP-51 SCLs in two (2) of the 10 composite samples collected (SB-04 and SB-08). The reported PAHs may be attributed to: (a) isolated releases in the area or the Corridor; and/or (b) the presence of historic fill material placed in the Corridor. Refer to Table 3 for a summary of TCL PAH detections.

4.2.3 Polychlorinated Biphenyls (PCBs) in Soil

PCBs were not detected in any of the 10 composite soil samples collected. Refer to Table 4 for a summary of PCBs.

4.2.4 Toxicity Characteristic Leaching Procedure (TCLP) Resource Conservation and Recovery Act (RCRA) Metals in Soil

TCLP RCRA metals were reported in each of the 10 composite samples collected at concentrations below the applicable RCRA standards. The reported metals are likely attributed to background levels. Refer to Table 5 for a summary of TCLP RCRA metals detections.

4.2.5 Waste Characterization of Soil

Ignitability (flash point), reactivity (cyanide and sulfide), and corrosivity (pH) were within the acceptable RCRA ranges. DRO were detected at concentrations ranging from approximately 17 milligrams per

kilogram (mg/kg) to 560 mg/kg in nine (9) of the 10 samples. There is no regulatory standard for DRO. Analytical results will need to be compared to levels acceptable by the chosen receiving facility to determine appropriate waste Characterization prior to off-site disposal. Refer to Table 5 for a summary of TCLP parameters, RCRA Characteristics, and DRO/GRO results.

4.2.6 Analysis of NYCDEP Parameters in Groundwater

Due to the shallow nature of the borings, groundwater was not encountered. Therefore, no groundwater samples were collected.

5.0 CONCLUSIONS AND RECOMMENDATIONS

Based on the evaluation of the field screening data and the laboratory analytical results, and a comparison to applicable regulatory standards, the following conclusions are presented:

- Field screening did not identify any visual or olfactory evidence of impacts or PID readings within the soil borings;

- Laboratory analytical results identified petroleum-impacted soils within the composite samples collected from eight (8) of the 10 soil borings. The presence of concentrations of petroleum components (i.e., PAHs and TPHC-DRO) in subsurface soils is attributed primarily to: (a) residuals from releases of petroleum products from the "High" and "Moderate" risk sites identified on and in the vicinity of the Corridor; and/or (b) contaminants in historic fill material placed on the Corridor;

- Due to the shallow nature of the borings, groundwater was not encountered. Therefore, no groundwater samples were collected; and,

- The subsurface soil samples collected did not exhibit hazardous waste characteristics.

Based on the results of the field investigation and laboratory analytical results, LiRo recommends the following:

- The Contract documents should identify provisions and a contingency for managing, handling, transporting and disposing of non-hazardous, petroleum contaminated soil. The Contractor should be required to submit a Material Handling Plan, to identify the specific protocol and procedures that will be employed to manage the waste in accordance with applicable regulations;

- Dust control procedures are recommended during excavation activities to minimize the creation and dispersion of fugitive airborne dust. The Contractor may implement dust control measures to minimize potential airborne contaminants released as a direct result of construction activities. A Community Air Monitoring Plan (CAMP) is recommended in accordance with NYSDEC DER-10 Regulations. The CAMP requires real-time monitoring for VOCs and particulates (i.e., dust) at the downwind perimeter of each designated work area when certain activities are in progress at contaminated sites. The CAMP is intended to provide a measure of protection for the downwind community from potential airborne contaminant releases as a direct result of investigative and remedial work activities. Specific requirements shall be reviewed for each situation in consultation with NYSDOH to ensure proper applicability;

- While groundwater was not encountered during the Phase II SCI field activities, groundwater may be encountered during the excavation work therefore requiring dewatering. Should dewatering be necessary during construction activities within the Corridor, the contractor should be required to obtain NYCDEP sewer discharge permit;

- In addition, if discharge into storm sewers (which ultimately discharge to surface waters) is required during dewatering, it may be performed under the appropriate NYSDEC State Pollutant Discharge Elimination System (SPDES) permit. Additional sampling and laboratory analysis may be required to satisfy NYSDEC requirements; and,

- Before beginning any excavation activity, the contractor shall submit a Corridor-specific health and safety plan (HASP) that will meet the requirements set forth by the Occupational, Safety and Health Administration (OSHA), the New York State Department of Health (NYSDOH) and any other applicable regulations. The HASP should identify the possible locations and risks associated with the potential contaminants that may be encountered, and the administrative and engineering controls that will be utilized to mitigate concerns (i.e., dust control procedures for PAHs).

6.0 STATEMENT OF LIMITATIONS

The data presented and the opinions expressed in this report are qualified as stated in the attachment to this section of the report.

Report Prepared By:

Jon Williams
Senior Geologist

Report Reviewed By:

Stephen Frank
Senior Geologist

Report Reviewed By:

Robert Kreuzer
Project Manager

STATEMENT OF LIMITATIONS

The data presented and the opinions expressed in this report are qualified as follows:

The sole purpose of the investigation and of this report is to assess the physical characteristics of the Corridor with respect to the presence or absence in the environment of oil or hazardous materials and substances as defined in the applicable state and federal environmental laws and regulations and to gather information regarding current and past environmental conditions at the Corridor.

LiRo derived the data in this report primarily from visual inspections, examination of records in the public domain, interviews with individuals with information about the Corridor, and a limited number of subsurface explorations made on the dates indicated. The passage of time, manifestation of latent conditions or occurrence of future events may require further exploration at the Corridor, analysis of the data, and reevaluation of the findings, observations, and conclusions expressed in the report.

In preparing this report, LiRo has relied upon and presumed accurate certain information (or the absence thereof) about the Corridor and adjacent properties provided by governmental officials and agencies, the Client, and others identified herein. Except as otherwise stated in the report, LiRo has not attempted to verify the accuracy or completeness of any such information.

The data reported and the findings, observations, and conclusions expressed in the report are limited by the Scope of Services, including the extent of subsurface exploration and other tests. The Scope of Services was defined by the requests of the Client, the time and budgetary constraints imposed by the Client, and the availability of access to the Corridor.

Because of the limitations stated above, the findings, observations, and conclusions expressed by LiRo in this report are not, and should not be considered, an opinion concerning the compliance of any past or present owner or operator of the Corridor with any federal, state or local law or regulation. No warranty or guarantee, whether express or implied, is made with respect to the data reported or findings, observations, and conclusions expressed in this report. Further, such data, findings, observations, and conclusions are based solely upon Corridor conditions in existence at the time of investigation.

This report has been prepared on behalf of and for the exclusive use of the Client, and is subject to and issued in connection with the Agreement and the provisions thereof.

TABLES

TABLE 1 – SUMMARY OF FIELD INVESTIGATION
TABLE 2 – SUMMARY OF TCL VOCs DETECTED IN SOIL
TABLE 3 – SUMMARY OF PAHs DETECTED IN SOIL
TABLE 4 – SUMMARY OF PCBs DETECTED IN SOIL
TABLE 5 –SUMMARY OF WASTE CHARACTERISTICS DETECTED IN SOIL

Table 1. Summary of Environmental Boring Data
Phase II Subsurface Corridor Investigation for Grand Concourse Phase 3
Grand Concourse from East 171st Street to East 175th Street, Bronx, New York

Boring No.	Sample ID	PID (ppm)	Sample Interval (ftbg)	Total VOCs (ug/kg)	PAHs (ug/kg)	Metals Exceed (Yes/No)[1]	Total PCBs (ug/kg)	Depth to Water (ftbg)	Total Depth (ftbg)	Other Comments
SB-01	SB-01-5.5-6.0	< 1	5.5-6.0	ND	NA	NA	NA	NA	6.0	No PID readings or visual or olfactory evidence of impacts were detected.
	SB-01-0.5-6.0		0.5-6.0	NA	ND	No	ND			
SB-02	SB-02-1.5-2.0	< 1	1.5-2.0	ND	NA	NA	NA	NA	2.0	No PID readings or visual or olfactory evidence of impacts were detected.
	SB-02-0.5-2.0		0.5-2.0	NA	2,000	No	ND			
SB-03[2]	SB-03-2.5-3.0	< 1	2.5-3.0	ND	NA	NA	NA	NA	3.0	No PID readings or visual or olfactory evidence of impacts were detected.
	SB-03-0.5-3.0		0.5-3.0	NA	2,980	No	ND			
SB-04	SB-04-1.5-2.0	< 1	1.5-2.0	ND	NA	NA	NA	NA	2.0	No PID readings or visual or olfactory evidence of impacts were detected.
	SB-04-0.5-2.0		0.5-2.0	NA	31,580	No	ND			
SB-05	SB-05-1.5-2.0	< 1	1.5-2.0	ND	NA	NA	NA	NA	2.0	No PID readings or visual or olfactory evidence of impacts were detected.
	SB-05-0.5-2.0		0.5-2.0	NA	21,290	No	ND			
SB-06	SB-06-1.5-2.0	< 1	1.5-2.0	ND	NA	NA	NA	NA	2.0	No PID readings or visual or olfactory evidence of impacts were detected.
	SB-06-0.5-2.0		0.5-2.0	NA	2,000	No	ND			
SB-07	SB-07-0.5-1.0	< 1	0.5-1.0	ND	NA	NA	NA	NA	1.0	No PID readings or visual or olfactory evidence of impacts were detected.
	SB-07-0.5-1.0		0.5-1.0	NA	ND	No	ND			
SB-08	SB-08-6.5-7.0	< 1	6.5-7.0	ND	NA	NA	NA	NA	7.0	No PID readings or visual or olfactory evidence of impacts were detected.
	SB-08-0.5-7.0		0.5-7.0	NA	158,090	No	ND			
SB-09	SB-09-2.0-2.5	< 1	2.0-2.5	ND	NA	NA	NA	NA	2.5	No PID readings or visual or olfactory evidence of impacts were detected.
	SB-09-0.5-2.5		0.5-2.5	NA	1,850	No	ND			
SB-10	SB-10-3.5-4.0	< 1	3.5-4.0	ND	NA	NA	NA	NA	4.0	No PID readings or visual or olfactory evidence of impacts were detected.
	SB-10-0.5-4.0		0.5-4.0	NA	5,130	No	ND			

Notes:
1. Metal(s) exceeds RCRA limits.
All soil samples were analyzed for Target Compound List (TCL) Volatile Organic Compounds (VOCs) and Polycyclic Aromatic Hydrocarbons (PAHs), PCBs, and RCRA Metals.
2. Sample mislabelled as SB02 on Chain of Custody.
NA = Not Analyzed/Not Applicable
ND = Non detect
ftbg = feet below grade surface
ppm = parts per million (or mg/kg)

Table 2. Summary of Target Compound List (TCL) Volatile Organic Compounds (VOCs) Detected in Soil
Phase II Subsurface Corridor Investigation for Grand Concourse Phase 3
Grand Concourse from East 171st Street to East 175th Street, Bronx, New York

TCL VOC	Part 375-6.8 (a) Unrestricted Use (Track 1) Soil Cleanup Objectives (SCOs)	Part 375-6.8 (b) Restricted Use (Track 2) Residential Soil Cleanup Objectives (SCOs)	CP-51 Soil Cleanup Levels (SCLs)	Sample ID, Date Collected, and Depth (ft bg)				
				SB-01-5.5-6.0	SB-02-1.5-2.0	SB-03-2.5-3.0[1]	SB-04-1.5-2.0	SB-05-1.5-2.0
				2/12/2016	2/11/2016	2/12/2016	2/11/2016	2/12/2016
				5.5-6	1.5-2	2.5-3	1.5-2	1.5-2
Methylene chloride	50	51,000	NS	ND	44B	ND	ND	[redacted]
Total VOCs	NS	NS	NS	ND	0.04	ND	ND	0.05

Notes:
All concentrations are reported in parts per billion (ppb or ug/kg)
ftbg = feet below grade surface
NS = No Standard
ND = Compound not detected above method detection limit (see attached lab report for mdl's)
B = Detected in associated blank sample

SCOs = Soil Cleanup Objectives as per the NYSDEC Regulations 6 NYCRR Subpart 375-6 Remedial Program Soil Cleanup Objectives (December 14, 2006).
CP-51 Soil Cleanup Levels (SCLs) = New York State Department of Environmental Conservation (NYSDEC) CP-51 – Soil Cleanup Guidance (CP-51) (October 21, 2010).
1. Sample mislabelled as SB-02 on Chain of Custody

BOLD = Concentration exceeds NYSDEC CP-51 SCLs Table 1 - Supplemental Soil Cleanup Objectives (Residential), Table 2 - SCLs for Gasoline Contaminated Soils, Table 3 - SCLs for Fuel oil Contaminated Soil

[redacted]

Italicized = Concentration exceeds Restricted Use (Track 2) Residential Soil Cleanup Objectives

Table 2. Summary of Target Compound List (TCL) Volatile Organic Compounds (VOCs) Detected in Soil
Phase II Subsurface Corridor Investigation for Grand Concourse Phase 3
Grand Concourse from East 171st Street to East 175th Street, Bronx, New York

TCL VOC	Part 375-6.8 (a) Unrestricted Use (Track 1) Soil Cleanup Objectives (SCOs)	Part 375-6.8 (b) Restricted Use (Track 2) Residential Soil Cleanup Objectives (SCOs)	CP-51 Soil Cleanup Levels (SCLs)	Sample ID, Date Collected, and Depth (ft bg)				
				SB-06-1.5-2.0	SB-07-0.5-1.0	SB-08-6.5-7.0	SB-09-2-2.5	SB-10-3.5-4.0
				2/12/2016	2/12/2016	2/11/2016	2/11/2016	2/11/2016
				0.5-2	0.5-1	6.5-7	2.0-2.5	3.5-4
Methylene chloride	50	51,000	NS	ND	ND	37B	40B	23B
Total VOCs	NS	NS	NS	ND	ND	0.04	0.04	0.02

Notes:
All concentrations are reported in parts per billion (ppb or ug/kg)
ft bg = feet below grade surface
NS = No Standard
ND = Compound not detected above method detection limit (see attached lab report for mdl's)
B = Detected in associated blank sample

SCOs = Soil Cleanup Objectives as per the NYSDEC Regulations 6 NYCRR Subpart 375-6 Remedial Program Soil Cleanup Objectives (December 14, 2006).
CP-51 Soil Cleanup Levels (SCLs) = New York State Department of Environmental Conservation (NYSDEC) CP-51 – Soil Cleanup Guidance (CP-51) (October 21, 2010).

BOLD = Concentration exceeds NYSDEC CP-51 SCLs Table 1 - Supplemental Soil Cleanup Objectives (Residential), Table 2 - SCLs for Gasoline Contaminated Soils, Table 3 - SCLs for Fuel oil Contaminated Soil

Italicized = Concentration exceeds Restricted Use (Track 2) Residential Soil Cleanup Objectives

Table 3. Summary of Target Compound List (TCL) Polycyclic Aromatic Hydrocarbons (PAHs) Detected in Soil
Phase II Subsurface Corridor Investigation for Grand Concourse Phase 3
Grand Concourse from East 171st Street to East 175th Street, Bronx, New York

TCL PAH	Part 375-6.8 (a) Unrestricted Use (Track 1) Soil Cleanup Objectives (SCOs)	Part 375-6.8 (b) Restricted Use (Track 2) Residential Soil Cleanup Objectives (SCOs)	CP-51 Soil Cleanup Levels (SCLs)	Sample ID, Date Collected, and Depth (ft bgs)				
				SB-01-0.5-6.0	SB-02-0.5-2.0	SB-03-0.5-3.0[1]	SB-04-0.5-2.0	SB-05-0.5-2.0
				2/12/2016	2/11/2016	2/12/2016	2/11/2016	2/12/2016
				0.5-6	0.5-2	0.5-3	0.5-2	0.5-2
Acenaphthene	20,000	100,000	20,000	ND	ND	ND	ND	670
Acenaphthylene	100,000	100,000	100,000	ND	ND	ND	350	ND
Anthracene	100,000	100,000	100,000	ND	ND	ND	310	500
Benzo(a)anthracene	1,000	1,000	1,000	ND	240	360	[redacted]	[redacted]
Benzo(a)pyrene	1,000	1,000	1,000	ND	240	390	[redacted]	[redacted]
Benzo(b)fluoranthene	1,000	1,000	1,000	ND	300	530	[redacted]	[redacted]
Benzo(g,h,i)perylene	100,000	100,000	100,000	ND	ND	220	1,400	560
Benzo(k)fluoranthene	800	1,000	800	ND	ND	190	[redacted]	ND
Chrysene	1,000	1,000	1,000	ND	230	380	[redacted]	[redacted]
Dibenz[a,h]anthracene	330	330	330	ND	ND	ND	[redacted]	ND
Flouranthene	100,000	100,000	100,000	ND	370	320	5,900	2,600
Fluorene	30,000	100,000	30,000	ND	ND	ND	410	460
Indeno(1,2,3-cd)pyrene	500	500	500	ND	ND	240	[redacted]	500
Napthalene	12,000	100,000	12,000	ND	ND	ND	ND	ND
Phenanthrene	100,000	100,000	100,000	ND	210	ND	4,300	5,600
Pyrene	100,000	100,000	100,000	ND	410	350	4,300	4,600
Total SVOCs	NS	NS	NS	ND	2,000	2,980	31,580	21,290

Notes:
All concentrations are reported in parts per billion (ppb or ug/kg)
ft bgs = feet below grade surface
ND = Compound not detected above method detection limit (see attached lab report for mdl's)
NS = No Standard
SCOs = Soil Cleanup Objectives as per the NYSDEC Regulations 6 NYCRR Subpart 375-6 Remedial Program Soil Cleanup Objectives (December 14, 2006).
CP-51 Soil Cleanup Levels (SCLs) = New York State Department of Environmental Conservation (NYSDEC) CP-51 – Soil Cleanup Guidance (CP-51) (October 21, 2010).
1. Sample mislabelled as SB-02 on Chain of Custody

BOLD = Concentration exceeds NYSDEC CP-51 SCLs Table 1 - Supplemental Soil Cleanup Objectives (Residential), Table 2 - SCLs for Gasoline Contaminated Soils, Table 3 - SCLs for Fuel oil Contaminated Soil
[redacted]
Italicized = Concentration exceeds Restricted Use (Track 2) Residential Soil Cleanup Objectives

Table 3. Summary of Target Compound List (TCL) Polycyclis Aromatic Hydrocarbons (PAHs) Detected in Soil
Phase II Subsurface Corridor Investigation for Grand Concourse Phase 3
Grand Concourse from East 171st Street to East 175th Street, Bronx, New York

TCL PAH	Part 375-6.8 (a) Unrestricted Use (Track 1) Soil Cleanup Objectives (SCOs)	Part 375-6.8 (b) Restricted Use (Track 2) Residential Soil Cleanup Objectives (SCOs)	CP-51 Soil Cleanup Levels (SCLs)	Sample ID, Date Collected, and Depth (ft bgs)				
				SB-06-0.5-2.0	SB-07-0.5-1.0	SB-08-0.5-7.0	SB-09-0.5-2.5	SB-10-0.5-4.0
				2/12/2016	2/12/2016	2/11/2016	2/11/2016	2/11/2016
				0.5-2	0.5-1	0.5-7	0.5-2.5	0.5-4
Acenaphthene	20,000	100,000	20,000	ND	ND	ND	ND	ND
Acenaphthylene	100,000	100,000	100,000	ND	ND	3,300	ND	ND
Anthracene	100,000	100,000	100,000	ND	ND	1,900	ND	ND
Benzo(a)anthracene	1,000	1,000	1,000	230	ND	[redacted]	230	450
Benzo(a)pyrene	1,000	1,000	1,000	200	ND	[redacted]	280	500
Benzo(b)fluoranthene	1,000	1,000	1,000	260	ND	[redacted]	310	730
Benzo(g,h,i)perylene	100,000	100,000	100,000	ND	ND	10,000	ND	330
Benzo(k)fluoranthene	800	1,000	800	ND	ND	[redacted]	ND	270
Chrysene	1,000	1,000	1,000	230	ND	[redacted]	250	520
Dibenz[a,h]anthracene	330	330	330	ND	ND	[redacted]	ND	ND
Flouranthene	100,000	100,000	100,000	410	ND	27,000	340	770
Fluorene	30,000	100,000	30,000	ND	ND	430	ND	ND
Indeno(1,2,3-cd)pyrene	500	500	500	ND	ND	[redacted]	ND	360
Napthalene	12,000	100,000	12,000	ND	ND	260	ND	ND
Phenanthrene	100,000	100,000	100,000	270	ND	9,200	ND	310
Pyrene	100,000	100,000	100,000	400	ND	24,000	440	890
Total SVOCs	NS	NS	NS	2,000	ND	158,090	1,850	5,130

Notes:
All concentrations are reported in parts per billion (ppb or ug/kg)
ft bgs = feet below grade surface
ND = Compound not detected above method detection limit (see attached lab report for mdl's)
NS = No Standard
SCOs = Soil Cleanup Objectives as per the NYSDEC Regulations 6 NYCRR Subpart 375-6 Remedial Program Soil Cleanup Objectives (December 14, 2006).
CP-51 Soil Cleanup Levels (SCLs) = New York State Department of Environmental Conservation (NYSDEC) CP-51 – Soil Cleanup Guidance (CP-51) (October 21, 2010).

BOLD = Concentration exceeds NYSDEC CP-51 SCLs Table 1 - Supplemental Soil Cleanup Objectives (Residential), Table 2 - SCLs for Gasoline Contaminated Soils, Table 3 - SCLs for Fuel oil Contaminated Soil
[redacted]
Italicized = Concentration exceeds Restricted Use (Track 2) Residential Soil Cleanup Objectives

Table 4. Summary of Polychlorinated Biphenyls (PCBs) Detected in Soil
Phase II Subsurface Corridor Investigation for Grand Concourse Phase 3
Grand Concourse from East 171st Street to East 175th Street, Bronx, New York

PCBs	Part 375-6.8 (a) Unrestricted Use (Track 1) Soil Cleanup Objectives (SCOs)	Part 375-6.8 (b) Restricted Use (Track 2) Residential Soil Cleanup Objectives (SCOs)	CP-51 Soil Cleanup Levels (SCLs)	Sample ID, Date Collected, and Depth (ftbg)				
				SB-01-0.5-6.0	SB-02-0.5-2.0	SB-03-0.5-3.0[1]	SB-04-0.5-2.0	SB-05-0.5-2.0
				2/12/2016	2/11/2016	2/12/2016	2/11/2016	2/12/2016
				0.5-6	0.5-2	0.5-3	0.5-2	0.5-2
Total PCBs	100	1,000	NS	ND	ND	ND	ND	ND

Notes:
All concentrations are reported in parts per billion (ppb or ug/kg)
ftbg = feet below grade surface
ND = Compound not detected above method detection limit (see attached lab report for mdl's)
NS = No Standard

SCOs = Soil Cleanup Objectives as per the NYSDEC Regulations 6 NYCRR Subpart 375-6 Remedial Program Soil Cleanup Objectives (December 14, 2006).
CP-51 Soil Cleanup Levels (SCLs) = New York State Department of Environmental Conservation (NYSDEC) CP-51 – Soil Cleanup Guidance (CP-51) (October 21, 2010).
1. Sample mislabelled as SB-02 on Chain of Custody

BOLD = Concentration exceeds NYSDEC CP-51 SCLs Table 1 - Supplemental Soil Cleanup Objectives (Residential), Table 2 - SCLs for Gasoline Contaminated Soils, Table 3 - SCLs for Fuel oil Contaminated Soil

Italicized = Concentration exceeds Restricted Use (Track 2) Residential Soil Cleanup Objectives

Table 4. Summary of Polychlorinated Biphenyls (PCBs) Detected in Soil
Phase II Subsurface Corridor Investigation for Grand Concourse Phase 3
Grand Concourse from East 171st Street to East 175th Street, Bronx, New York

PCBs	Part 375-6.8 (a) Unrestricted Use (Track 1) Soil Cleanup Objectives (SCOs)	Part 375-6.8 (b) Restricted Use (Track 2) Residential Soil Cleanup Objectives (SCOs)	CP-51 Soil Cleanup Levels (SCLs)	Sample ID, Date Collected, and Depth (ftbg)				
				SB-06-0.5-2.0	SB-07-0.5-1.0	SB-08-0.5-7.0	SB-09-0.5-2.5	SB-10-0.5-4.0
				2/12/2016	2/12/2016	2/11/2016	2/11/2016	2/11/2016
				0.5-2	0.5-1	0.5-7	0.5-2.5	0.5-4
Total PCBs	100	1,000	NS	ND	ND	ND	ND	ND

Notes:
All concentrations are reported in parts per billion (ppb or ug/kg)
ftbg = feet below grade surface
ND = Compound not detected above method detection limit (see attached lab report for mdl's)
NS = No Standard
SCOs = Soil Cleanup Objectives as per the NYSDEC Regulations 6 NYCRR Subpart 375-6 Remedial Program Soil Cleanup Objectives (December 14, 2006).
CP-51 Soil Cleanup Levels (SCLs) = New York State Department of Environmental Conservation (NYSDEC) CP-51 – Soil Cleanup Guidance (CP-51) (October 21, 2010).

BOLD = Concentration exceeds NYSDEC CP-51 SCLs Table 1 - Supplemental Soil Cleanup Objectives (Residential), Table 2 - SCLs for Gasoline Contaminated Soils, Table 3 - SCLs for Fuel oil Contaminated Soil
Shading = [illegible]
Italicized = Concentration exceeds Restricted Use (Track 2) Residential Soil Cleanup Objectives

Table 5. Summary of Waste Characterization in Soil
Phase II Subsurface Corridor Investigation for Grand Concourse Phase 3
Grand Concourse from East 171st Street to East 175th Street, Bronx, New York

Parameter	6 NYCRR Part 371 and RCRA	Sample ID and Date Collected				
		SB-01-0.5-6.0	SB-02-0.5-2.0	SB-03-0.5-3.0[1]	SB-04-0.5-2.0	SB-05-0.5-2.0
		2/12/2016	2/11/2016	2/12/2016	2/11/2016	2/12/2016
		0.5-6	0.5-2	0.5-3	0.5-2	0.5-2
METALS	**ug/L**					
Arsenic	5,000	ND	ND	ND	ND	ND
Barium	100,000	260	240	180	650	300
Chromium	5,000	12	ND	ND	ND	ND
Lead	5,000	ND	ND	ND	ND	ND
MISC. PARAMETERS (units)						
Reactivity Sulfide (mg/kg)	500	ND	ND	ND	ND	ND
Reactivity Cyanide (mg/kg)	250	ND	ND	ND	ND	ND
pH (SU)	2-12.5	7.3	11.0	8.7	8.1	6.7
Ignitability	>140 °F	Absent	Absent	Absent	Absent	Absent
TPHC Diesel Range Organics (mg/kg)	NS	ND	21	17	85	100
TPHC Gasoiline Range Organics (mg/kg)	NS	ND	ND	ND	ND	ND

Notes:
ftbg = feet below grade surface
NS = No Standard
ND = Compound not detected above method detection limit (see attached lab report for mdl's)
SU = Standard unit
mg/L = milligram per liter
ug/L = microgram per liter
1. Sample mislabelled as SB02 on Chain of Custody

Table 5. Summary of Waste Characterization in Soil
Phase II Subsurface Corridor Investigation for Grand Concourse Phase 3
Grand Concourse from East 171st Street to East 175th Street, Bronx, New York

Parameter	6 NYCRR Part 371 and RCRA	Sample ID and Date Collected				
		SB-06-0.5-2.0	SB-07-0.5-1.0	SB-08-0.5-7.0	SB-09-0.5-2.5	SB-10-0.5-4.0
		2/12/2016	2/12/2016	2/11/2016	2/11/2016	2/11/2016
		0.5-2	0.5-1	0.5-7	0.5-2.5	0.5-4
METALs[1]	**ug/L**					
Arsenic	5,000	ND	32	ND	ND	ND
Barium	100,000	420	160	250	310	290
Chromium	5,000	ND	ND	ND	ND	ND
Lead	5,000	ND	64	ND	ND	ND
MISC. PARAMETERS (units)						
Reactivity Sulfide (mg/kg)	500	ND	ND	ND	ND	ND
Reactivity Cyanide (mg/kg)	250	ND	ND	ND	ND	ND
pH (SU)	2-12.5	6.8	7.2	8.4	8.0	7.7
Ignitability	>140 °F	Absent	Absent	Absent	Absent	Absent
TPHC Diesel Range Organics (mg/kg)	NS	29	56	560	35	50
TPHC Gasoiline Range Organics (mg/kg)	NS	ND	ND	ND	ND	ND

Notes:
ftbg = feet below grade surface
NS = No Standard
ND = Compound not detected above method detection limit (see attached lab report for mdl's)
SU = Standard unit
J = Estimated value
mg/Kg = milligram per kilogram
ug/L = microgram per liter

[redacted]

FIGURE 1 – TOPOGRAPHIC CORRIDOR LOCATION MAP

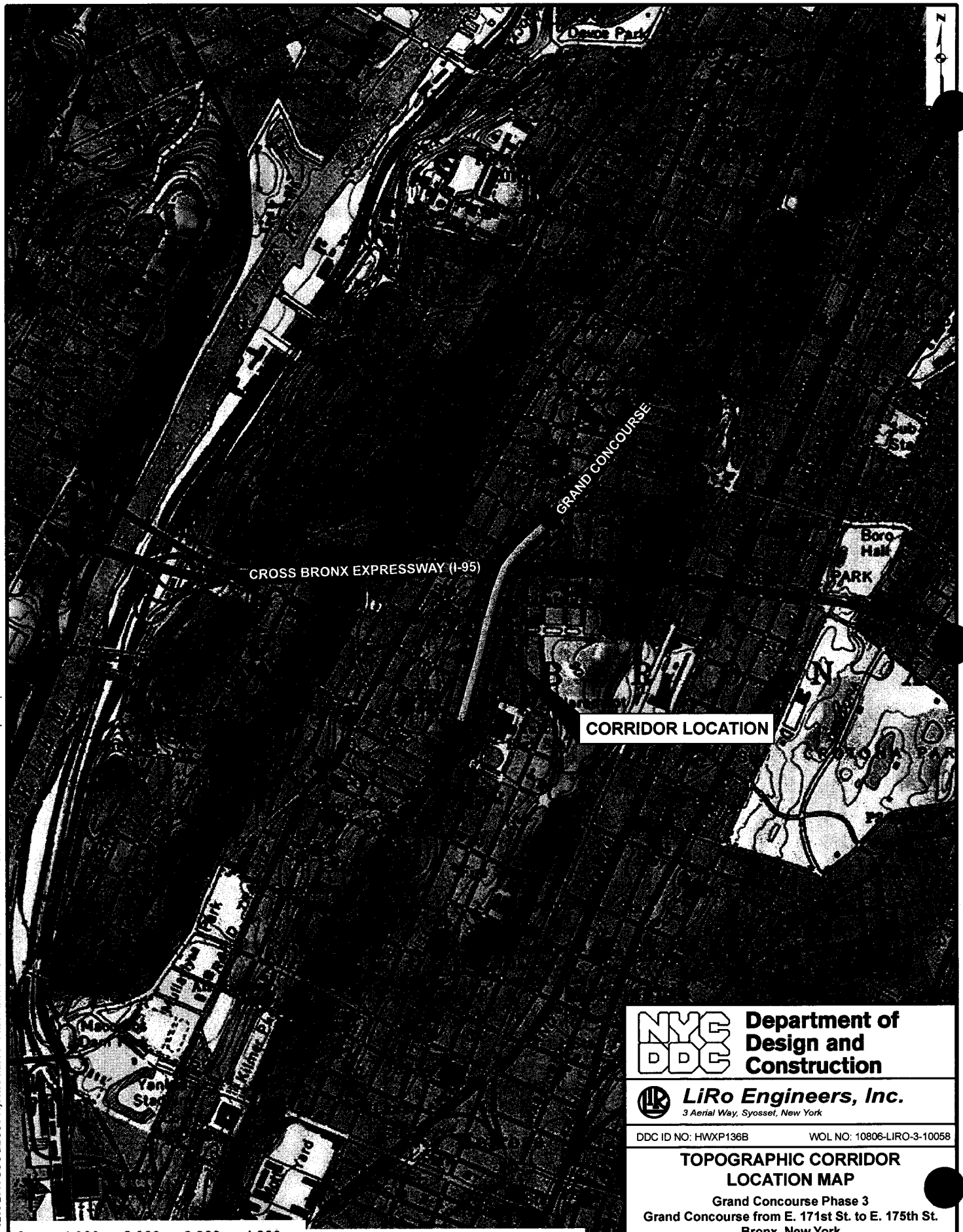

Department of Design and Construction

LiRo Engineers, Inc.
3 Aerial Way, Syosset, New York

DDC ID NO: HWXP136B | WOL NO: 10806-LIRO-3-10058

TOPOGRAPHIC CORRIDOR LOCATION MAP

Grand Concourse Phase 3
Grand Concourse from E. 171st St. to E. 175th St.
Bronx, New York

SCALE: AS SHOWN	DATE: 3/2016	FIGURE: 1

J:\15-008-0265 2015 DDC BEGS\Projects\Phase I - Phase III\10806 Grand Concourse Ph II SCI\CAD\Grand Concourse Topo Map.ai

FIGURE 2 – SAMPLE LOCATION PLAN

J:\15-008-0265 2015 DDC BEGS\Projects\Phase I - Phase II\10806 Grand Concourse Ph II SC\CAD\Grand Concourse Sample Plan.DWG, 3/7/2016 1:10:24 PM, AMK

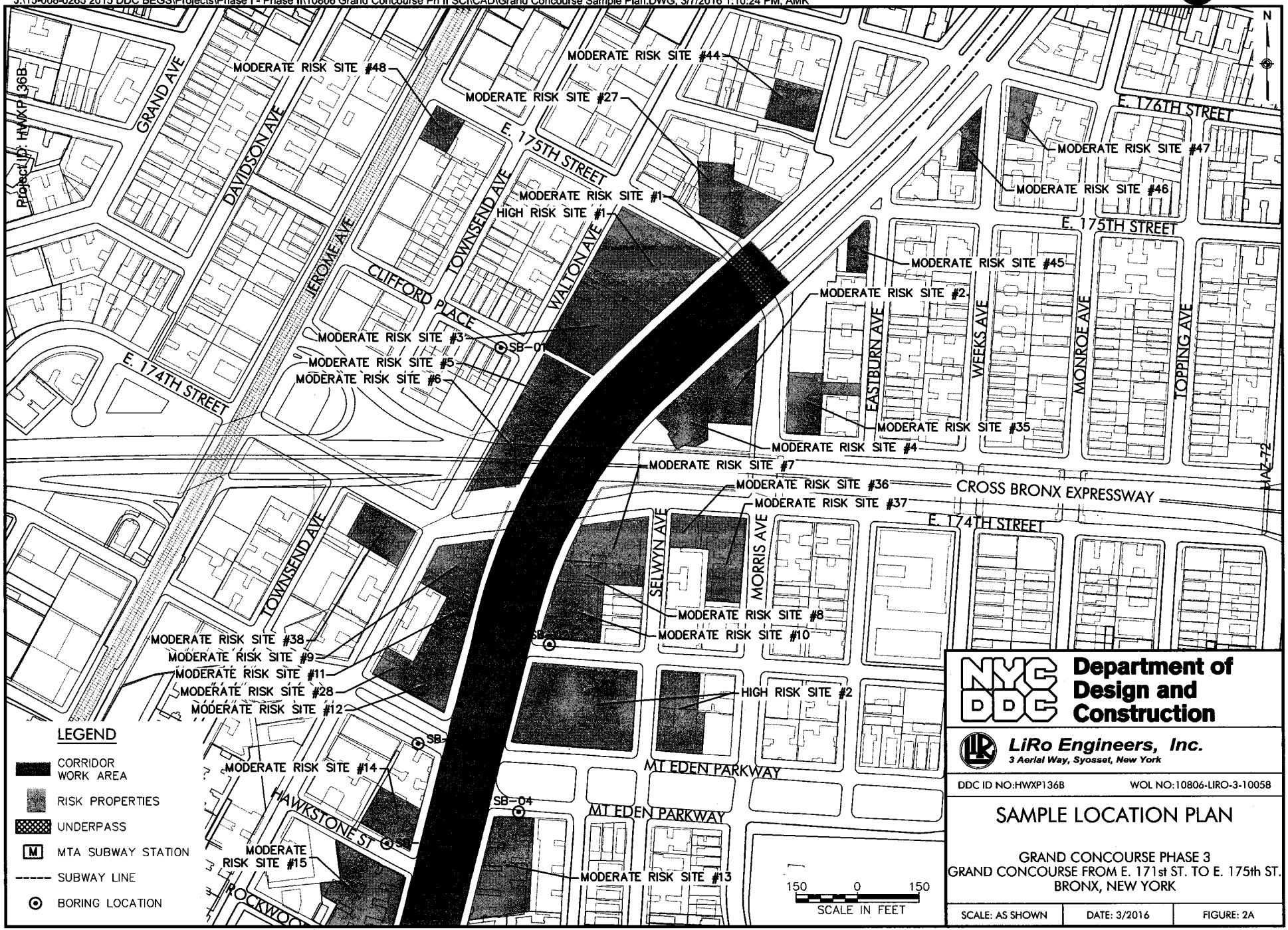

Department of Design and Construction

LiRo Engineers, Inc.
3 Aerial Way, Syosset, New York

DDC ID NO:HWXP136B | WOL NO:10806-LIRO-3-10058

SAMPLE LOCATION PLAN

GRAND CONCOURSE PHASE 3
GRAND CONCOURSE FROM E. 171st ST. TO E. 175th ST.
BRONX, NEW YORK

SCALE: AS SHOWN	DATE: 3/2016	FIGURE: 2A

J:\15-008-0265 2015 DDC BEGS\Projects\Phase I - Phase II\10806 Grand Concourse Ph II SC\CAD\Grand Concourse Sample Plan.DWG, 3/7/2016 1:10:25 PM, AMK

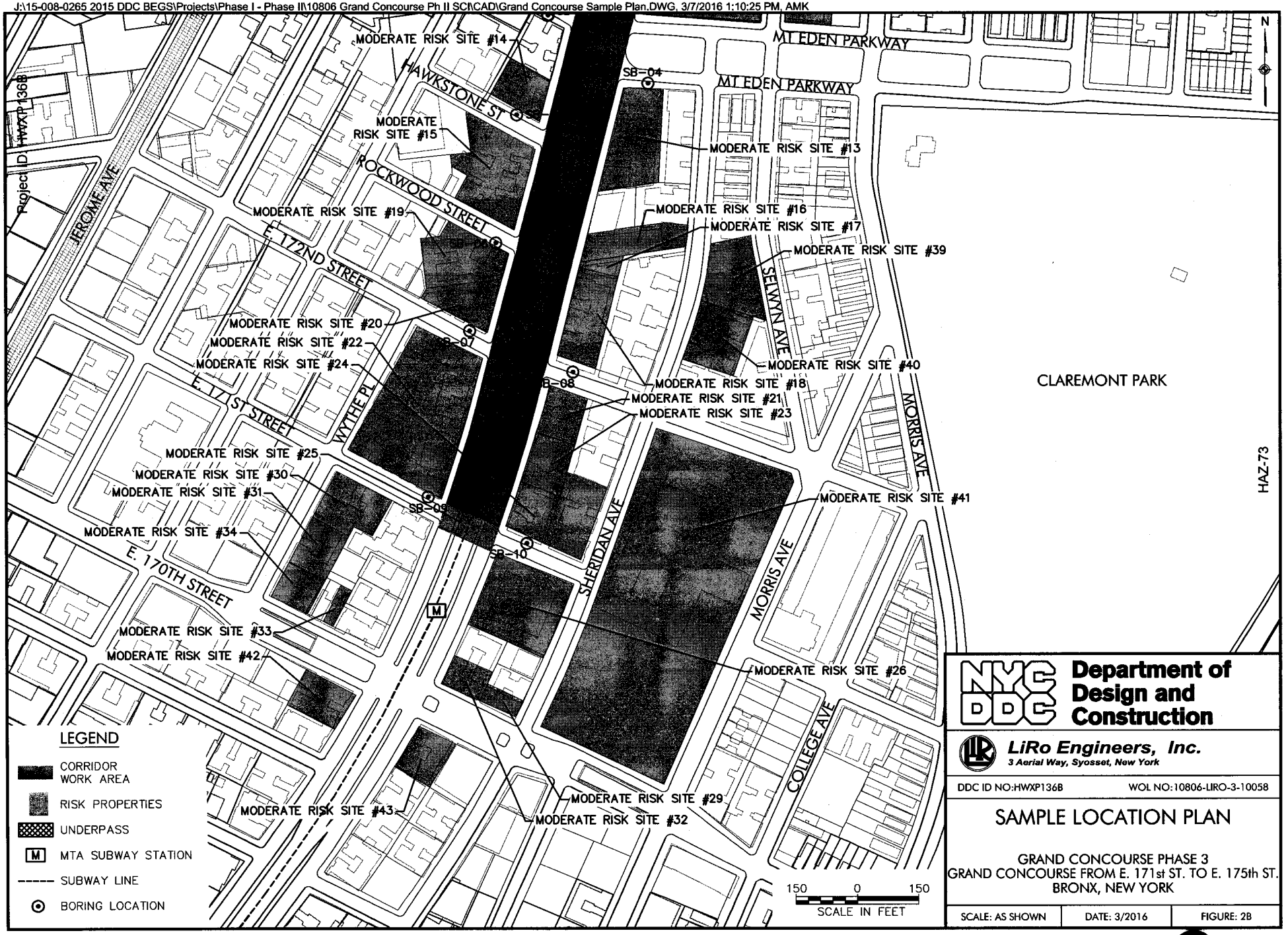

Department of Design and Construction

LiRo Engineers, Inc.
3 Aerial Way, Syosset, New York

DDC ID NO:HWXP136B | WOL NO:10806-LIRO-3-10058

SAMPLE LOCATION PLAN

GRAND CONCOURSE PHASE 3
GRAND CONCOURSE FROM E. 171st ST. TO E. 175th ST.
BRONX, NEW YORK

SCALE: AS SHOWN	DATE: 3/2016	FIGURE: 2B

APPENDIX A
BORING LOCATION SKETCHES

J:\15-008-0265 2015 DDC BEGS\Projects\Phase I - Phase II\10806 Grand Concourse Ph II SCI\CAD\Grand Concourse Boring Sketch.DWG, 3/7/2016 1:11:12 PM, AMK

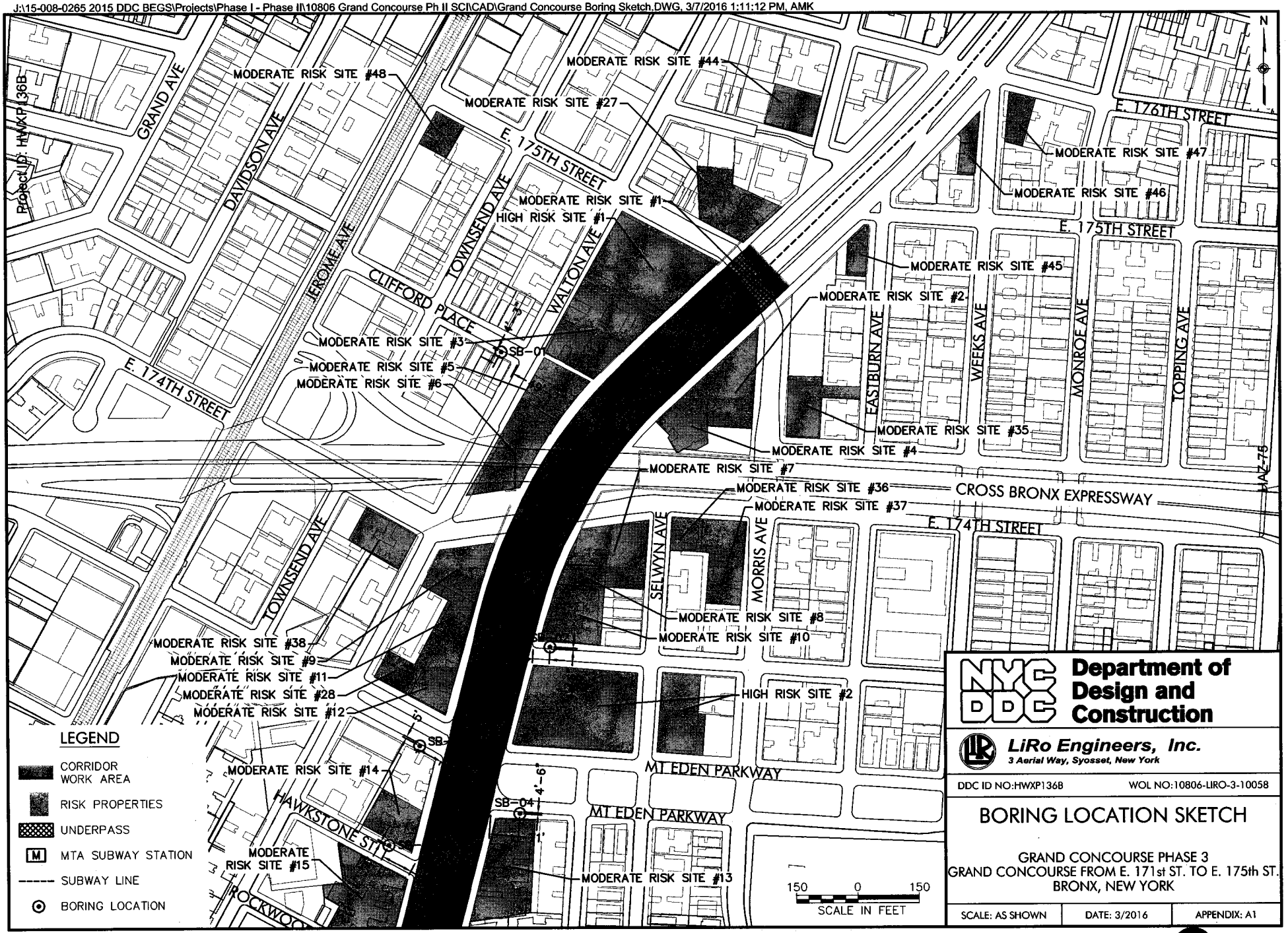

Department of Design and Construction

LiRo Engineers, Inc.
3 Aerial Way, Syosset, New York

DDC ID NO:HWXP136B | WOL NO:10806-LIRO-3-10058

BORING LOCATION SKETCH

GRAND CONCOURSE PHASE 3
GRAND CONCOURSE FROM E. 171st ST. TO E. 175th ST.
BRONX, NEW YORK

SCALE: AS SHOWN	DATE: 3/2016	APPENDIX: A1

J:\15-008-0265 2015 DDC BEGS\Projects\Phase I - Phase II\10806 Grand Concourse Ph II SCI\CAD\Grand Concourse Boring Sketch.DWG, 3/7/2016 1:11:13 PM, AMK

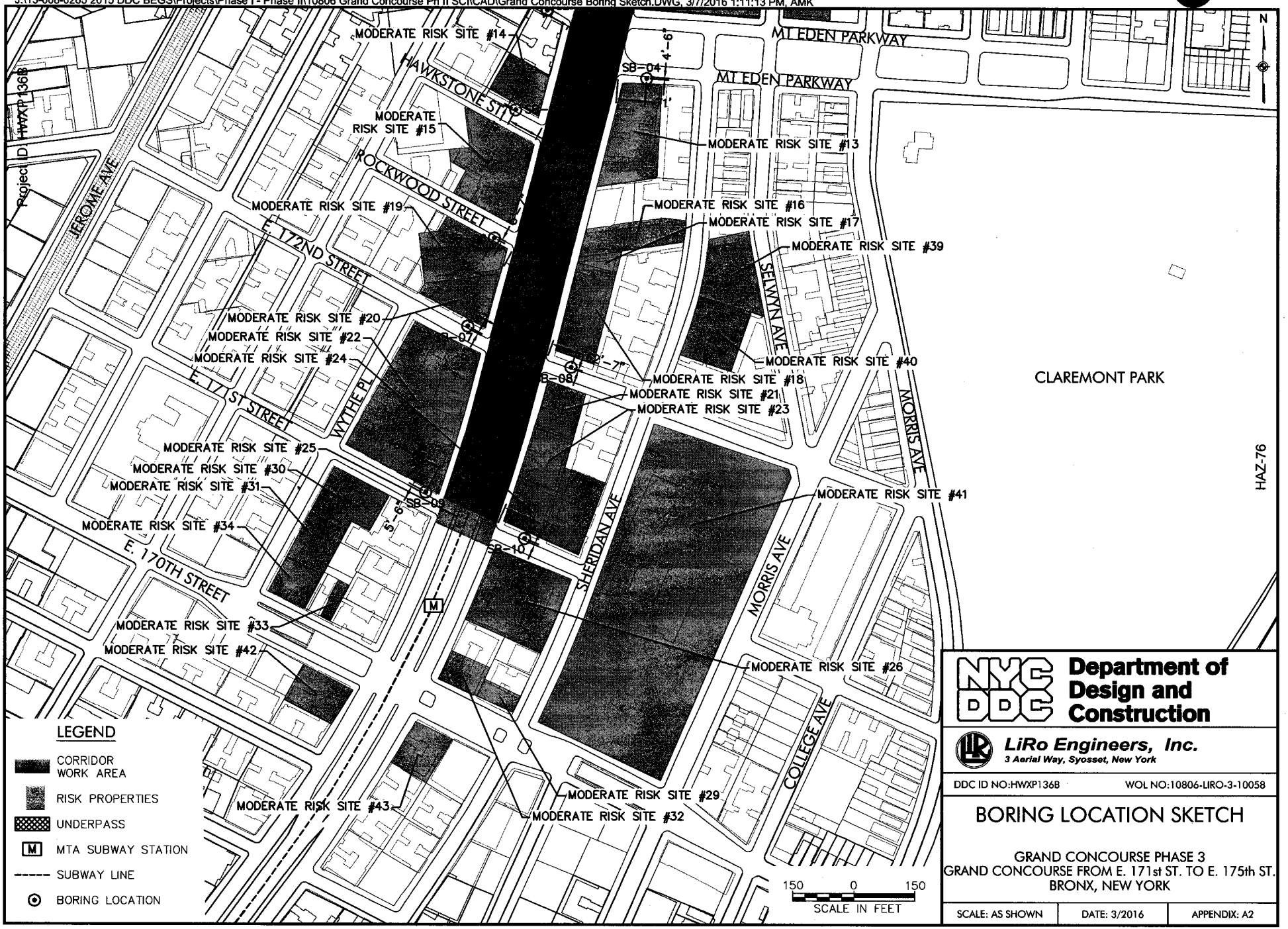

NYC DDC **Department of Design and Construction**

LiRo Engineers, Inc.
3 Aerial Way, Syosset, New York

DDC ID NO:HWXP136B | WOL NO:10806-LIRO-3-10058

BORING LOCATION SKETCH

GRAND CONCOURSE PHASE 3
GRAND CONCOURSE FROM E. 171st ST. TO E. 175th ST.
BRONX, NEW YORK

SCALE: AS SHOWN	DATE: 3/2016	APPENDIX: A2

APPENDIX B
GEOLOGIC BORING LOGS

LiRo Engineers, Inc.

TEST BORING LOG

BORING NO:	SB-01
SHEET:	
JOB NO.:	15-008-0265
LOCATION:	Clifford Pl W. of Walton Ave.
GROUND ELEVATION:	NA
DATE STARTED:	February 12, 2016
DATE FINISHED:	February 12, 2016
DRILLER:	John Veiss
GEOLOGIST:	Scott Swanson
REVIEWED BY:	

PROJECT: Grand Concourse Phase 3, from 170th to 175th Streets, Bronx No. HWXP136B

CLIENT: Department of Design and Construction - OEGS TASK ID NO. 10806

BORING CONTRACTOR: Associated Environmental Services, Ltd.

GROUNDWATER: NA

DATE	TIME	LEVEL	TYPE	TYPE	CAS.	SAMPLER	TUBE
N/A			NA	DIA.	NA		
				WT.	NA		
				FALL	NA		

DEPTH FEET	SAMPLE STRATA	"S" NO.	"N" NO.	BLOWS PER 6"	REC% RQD%	DESCRIPTION COLOR	CONSISTENCY HARDNESS	MATERIAL DESCRIPTION	USCS	REMARKS
1					NA	dk brown	NA	below first 6" soil mixed with root material	FILL	Cleared to 6 ftbg
						yellow brn		gravelly fine SAND		0.0 ppm
6						dk brown		weathered mica schist		slightly moist
								Rock Refusal at 6 feet		
10										
15										
20										
25										
30										
35										

COMMENTS: Grab sample collected @ 5.5 - 6.0 ftbg for TCL VOCs. Composite sample collected from 0.5-6.0 ftbg for PAHs, TCLP RCRA Metals, PCBS, TPHC DRO/GRO, and RCRA Characteristics. Soil was classified according to the Unified Soil Classification System (USCS).

PROJECT NO.: 15-008-0265 Task:

BORING NO.: SB-01

LiRo Engineers, Inc.

TEST BORING LOG

BORING NO:	SB-02
SHEET:	
JOB NO.:	15-008-0265 Task 047
LOCATION:	E. 173rd St. E. of Gr. Conc.
GROUND ELEVATION:	NA
DATE STARTED:	February 11, 2016
DATE FINISHED:	February 11, 2016
DRILLER:	Ryan Jensen
GEOLOGIST:	Scott Swanson
REVIEWED BY:	

PROJECT: Grand Concourse Phase 3, from 170th to 175th Streets, Bronx No. HWXP136B

CLIENT: Department of Design and Construction - OEGS TASK ID NO. 10806

BORING CONTRACTOR: Associated Environmental Services, Ltd.

GROUNDWATER: NA

DATE	TIME	LEVEL	TYPE	TYPE	CAS.	SAMPLER	TUBE
N/A			NA	DIA.	NA		
				WT.	NA		
				FALL	NA		

DEPTH FEET	SAMPLE STRATA	"S" NO.	"N" NO.	BLOWS PER 6"	REC% RQD%	DESCRIPTION COLOR	CONSISTENCY HARDNESS	MATERIAL DESCRIPTION	USCS	REMARKS PID
1					NA	Orange-Brown	NA	5" conc./Med-Cs Sand FILL, all homogeneous	FILL	0.0 ppm
								2 large bedrock(mica schist) boulders at 2'		moist to v. moist
								Rock Refusal at 2 feet		
6										
10										
15										
20										
25										
30										
35										

COMMENTS: Grab sample collected @ 1.5 - 2.0 ftbg for TCL VOCs. Composite sample collected from 0.5-2.0 ftbg for PAHs, TCLP RCRA Metals, PCBS, TPHC DRO/GRO, and RCRA Characteristics. Soil was classified according to the Unified Soil Classifaction System (USCS).

PROJECT NO.: 15-008-0265 Task: 047

BORING NO.: SB-02

LiRo Engineers, Inc.

TEST BORING LOG

BORING NO:	SB-03
SHEET:	
JOB NO.:	15-008-0265 Task 047
LOCATION:	Mt. Eden Ave. W. of Gr Conc
GROUND ELEVATION:	NA
DATE STARTED:	February 12, 2016
DATE FINISHED:	February 12, 2016
DRILLER:	John Veiss
GEOLOGIST:	Scott Swanson
REVIEWED BY:	

PROJECT: Grand Concourse Phase 3, from 170th to 175th Streets, Bronx No. HWXP136B

CLIENT: Department of Design and Construction - OEGS TASK ID NO. 10806

BORING CONTRACTOR: Associated Environmental Services, Ltd.

GROUNDWATER: NA

DATE	TIME	LEVEL	TYPE	TYPE	CAS.	SAMPLER	TUBE
N/A			NA	DIA.	NA		
				WT.	NA		
				FALL	NA		

DEPTH FEET	SAMPLE STRATA	"S" NO.	"N" NO.	BLOWS PER 6"	REC% RQD%	DESCRIPTION COLOR	CONSISTENCY HARDNESS	MATERIAL DESCRIPTION	USCS	REMARKS PID
1					NA	dark brown	NA	sandy SILT w/ some root material	FILL	0.0 ppm
								fine to med SAND, trace pea size gravel	SW	v. moist
								some 6" frag of weathered bedrock		
								Rock Refusal at 3 feet		
6										
10										
15										
20										
25										
30										
35										

COMMENTS: Grab sample collected @ 2.5 - 3.0 ftbg for TCL VOCs. Composite sample collected from 0.5-3.0 ftbg for PAHs, TCLP RCRA Metals, PCBS, TPHC DRO/GRO, and RCRA Characteristics. Soil was classified according to the Unified Soil Classification System (USCS).

PROJECT NO.: 15-008-0265 Task: 047

BORING NO.: SB-03

LiRo Engineers, Inc.

TEST BORING LOG

BORING NO:	SB-04
SHEET:	
JOB NO.:	15-008-0265 Task 047
LOCATION:	Mt. Eden Pkwy E. of Gr Conc
GROUND ELEVATION:	NA
DATE STARTED:	February 11, 2016
DATE FINISHED:	February 11, 2016
DRILLER:	Ryan Jensen
GEOLOGIST:	Scott Swanson
REVIEWED BY:	

PROJECT: Grand Concourse Phase 3, from 170th to 175th Streets, Bronx No. HWXP136B

CLIENT: Department of Design and Construction - OEGS TASK ID NO. 10806

BORING CONTRACTOR: Associated Environmental Services, Ltd.

GROUNDWATER: NA

DATE	TIME	LEVEL	TYPE	TYPE	CAS.	SAMPLER	TUBE
N/A			NA	DIA.	NA		
				WT.	NA		
				FALL	NA		

DEPTH FEET	SAMPLE STRATA	"S" NO.	"N" NO.	BLOWS PER 6"	REC% RQD%	DESCRIPTION COLOR	CONSISTENCY HARDNESS	MATERIAL DESCRIPTION	USCS	REMARKS PID
1					NA	Brown	NA	med-cs SAND, some gravels	SW	0.0 ppm
								hit boulder or bedrock of mica Schist @2'		moist
								Rock Refusal at 2 feet		
6										
10										
15										
20										
25										
30										
35										

COMMENTS: Grab sample collected @ 1.5 - 2.0 ftbg for TCL VOCs. Composite sample collected from 0.5-2.0 ftbg for PAHs, TCLP RCRA Metals, PCBS, TPHC DRO/GRO, and RCRA Characteristics. Soil was classified according to the Unified Soil Classification System (USCS).

PROJECT NO.: 15-008-0265 Task: 047

BORING NO.: SB-04

LiRo Engineers, Inc.

TEST BORING LOG

BORING NO:	SB-05
SHEET:	
JOB NO.:	15-008-0265 Task 047
LOCATION:	Hawkstone St W. of Gr Conc.
GROUND ELEVATION:	NA
DATE STARTED:	February 12, 2016
DATE FINISHED:	February 12, 2016
DRILLER:	John Veiss
GEOLOGIST:	Scott Swanson
REVIEWED BY:	

PROJECT: Grand Concourse Phase 3, from 170th to 175th Streets, Bronx No. HWXP136B

CLIENT: Department of Design and Construction - OEGS TASK ID NO. 10806

BORING CONTRACTOR: Associated Environmental Services, Ltd.

GROUNDWATER: NA

DATE	TIME	LEVEL	TYPE	TYPE	CAS.	SAMPLER	TUBE
N/A			NA	DIA.	NA		
				WT.	NA		
				FALL	NA		

DEPTH FEET	SAMPLE STRATA	"S" NO.	"N" NO.	BLOWS PER 6"	REC% RQD%	DESCRIPTION COLOR	CONSISTENCY HARDNESS	MATERIAL DESCRIPTION	USCS	REMARKS PID
1					NA	dk brown	NA	silty soil with root material sandy SILT, tr mica schist weathered rock	SM	0.0 ppm moist
								Rock Refusal at 2 feet		
6										
10										
15										
20										
25										
30										
35										

COMMENTS: Grab sample collected @ 1.5 - 2.0 ftbg for TCL VOCs. Composite sample collected from 0.5-2.0 ftbg for PAHs, TCLP RCRA Metals, PCBS, TPHC DRO/GRO, and RCRA Characteristics. Soil was classified according to the Unified Soil Classification System (USCS).

PROJECT NO.: 15-008-0265 Task: 047

BORING NO.: SB-05

LiRo Engineers, Inc.

TEST BORING LOG

BORING NO:	SB-06
SHEET:	
JOB NO.:	15-008-0265 Task 047
LOCATION:	Rockwood St. W. of Gr. Conc.
GROUND ELEVATION:	NA
DATE STARTED:	February 12, 2016
DATE FINISHED:	February 12, 2016
DRILLER:	John Veiss
GEOLOGIST:	Scott Swanson
REVIEWED BY:	

PROJECT: Grand Concourse Phase 3, from 170th to 175th Streets, Bronx No. HWXP136B

CLIENT: Department of Design and Construction - OEGS TASK ID NO. 10806

BORING CONTRACTOR: Associated Environmental Services, Ltd.

GROUNDWATER: NA

DATE	TIME	LEVEL	TYPE	TYPE	CAS.	SAMPLER	TUBE
N/A			NA	DIA.	NA		
				WT.	NA		
				FALL	NA		

DEPTH FEET	SAMPLE STRATA	"S" NO.	"N" NO.	BLOWS PER 6"	REC% RQD%	DESCRIPTION COLOR	CONSISTENCY HARDNESS	MATERIAL DESCRIPTION	USCS	REMARKS PID
1					NA	dark brown	NA	gravelly coarse SAND with weathered bedrock frag.(mica schist)	SW	0.0 ppm sl. Moist
								Rock Refusal at 2 feet		
6										
10										
15										
20										
25										
30										
35										

COMMENTS: Grab sample collected @ 1.5 - 2.0 ftbg for TCL VOCs. Composite sample collected from 0.5-2.0 ftbg for PAHs, TCLP RCRA Metals, PCBS, TPHC DRO/GRO, and RCRA Characteristics. Soil was classified according to the Unified Soil Classification System (USCS).

PROJECT NO.: 15-008-0265 Task: 047

BORING NO.: SB-06

LiRo Engineers, Inc.

TEST BORING LOG

BORING NO:	SB-07
SHEET:	
JOB NO.:	15-008-0265 Task 047
LOCATION:	E. 172nd St. W. of Gr. Conc.
GROUND ELEVATION:	NA
DATE STARTED:	February 12, 2016
DATE FINISHED:	February 12, 2016
DRILLER:	John Veiss
GEOLOGIST:	Scott Swanson
REVIEWED BY:	

PROJECT: Grand Concourse Phase 3, from 170th to 175th Streets, Bronx No. HWXP136B

CLIENT: Department of Design and Construction - OEGS TASK ID NO. 10806

BORING CONTRACTOR: Associated Environmental Services, Ltd.

GROUNDWATER: NA

DATE	TIME	LEVEL	TYPE	TYPE	CAS.	SAMPLER	TUBE
N/A			NA	DIA.	NA		
				WT.	NA		
				FALL	NA		

DEPTH FEET	SAMPLE STRATA	"S" NO.	"N" NO.	BLOWS PER 6"	REC% RQD%	DESCRIPTION COLOR	CONSISTENCY HARDNESS	MATERIAL DESCRIPTION	USCS	REMARKS PID
1					NA	brown	NA	silty soil with tr mica schist gravel	SM	0.0 ppm
								Rock boulder Refusal at 1 feet		
6										
10										
15										
20										
25										
30										
35										

COMMENTS: Grab sample collected @ 0.5 - 1.0 ftbg for TCL VOCs. Composite sample collected from 0.5-1.0 ftbg for PAHs, TCLP RCRA Metals, PCBS, TPHC DRO/GRO, and RCRA Characteristics. Soil was classified according to the Unified Soil Classification System (USCS).

PROJECT NO.: 15-008-0265 Task: 047

BORING NO.: SB-07

LiRo Engineers, Inc.

TEST BORING LOG

BORING NO:	SB-08
SHEET:	
JOB NO.:	15-008-0265
LOCATION:	E. 172nd St. E. of Gr. Conc.
GROUND ELEVATION:	NA
DATE STARTED:	February 11, 2016
DATE FINISHED:	February 11, 2016
DRILLER:	Ryan Jensen
GEOLOGIST:	Scott Swanson
REVIEWED BY:	

PROJECT: Grand Concourse Phase 3, from 170th to 175th Streets, Bronx No. HWXP136B

CLIENT: Department of Design and Construction - OEGS TASK ID NO. 10806

BORING CONTRACTOR: Associated Environmental Services, Ltd.

GROUNDWATER: NA

DATE	TIME	LEVEL	TYPE		CAS.	SAMPLER	TUBE
N/A			NA	DIA.	NA		
				WT.	NA		
				FALL	NA		

DEPTH FEET	SAMPLE STRATA	"S" NO.	"N" NO.	BLOWS PER 6"	REC% RQD%	DESCRIPTION COLOR	CONSISTENCY HARDNESS	MATERIAL DESCRIPTION	USCS	REMARKS
1					NA	Dark brown	NA	gravelly coarse SAND, fragments of mica schist throughout (4-6 in diameter)	SW	Cleared to 7 ftbg; 0.0 ppm; slightly moist
6								weathered bedrock mica sands		
								Rock Refusal at 7 feet		
10										
15										
20										
25										
30										
35										

COMMENTS: Grab sample collected @ 6.5 - 7.0 ftbg for TCL VOCs. Composite sample collected from 0.5-7.0 ftbg for PAHs, TCLP RCRA Metals, PCBS, TPHC DRO/GRO, and RCRA Characteristics. Soil was classified according to the Unified Soil Classification System (USCS).

PROJECT NO.: 15-008-0265 Task:

BORING NO.: SB-08

LiRo Engineers, Inc.

TEST BORING LOG

BORING NO:	SB-09
SHEET:	
JOB NO.:	15-008-0265 Task 047
LOCATION:	E. 171st St. W. of Gr. Conc.
GROUND ELEVATION:	NA
DATE STARTED:	February 11, 2016
DATE FINISHED:	February 11, 2016
DRILLER:	Ryan Jensen
GEOLOGIST:	Scott Swanson
REVIEWED BY:	

PROJECT: Grand Concourse Phase 3, from 170th to 175th Streets, Bronx No. HWXP136B

CLIENT: Department of Design and Construction - OEGS TASK ID NO. 10806

BORING CONTRACTOR: Associated Environmental Services, Ltd.

GROUNDWATER: NA

DATE	TIME	LEVEL	TYPE	TYPE	CAS.	SAMPLER	TUBE
N/A			NA	DIA.	NA		
				WT.	NA		
				FALL	NA		

DEPTH FEET	SAMPLE STRATA	"S" NO.	"N" NO.	BLOWS PER 6"	REC% RQD%	DESCRIPTION COLOR	CONSISTENCY HARDNESS	MATERIAL DESCRIPTION	USCS	REMARKS PID
1					NA	dark brown	NA	silty Soil w/some roots		0.0 ppm
								gravelly med SAND, some silt	SM	moist
								solid rock or boulder at 2.5'		
								Rock Refusal at 2.5 feet		
6										
10										
15										
20										
25										
30										
35										

COMMENTS: Grab sample collected @ 2.0-2.5 ftbg for TCL VOCs. Composite sample collected from 0.5-2.5 ftbg for PAHs, TCLP RCRA Metals, PCBS, TPHC DRO/GRO, and RCRA Characteristics. Soil was classified according to the Unified Soil Classification System (USCS).

PROJECT NO.: 15-008-0265 Task: 047

BORING NO.: SB-09

LiRo Engineers, Inc.

TEST BORING LOG

BORING NO:	SB-10
SHEET:	
JOB NO.:	15-008-0265 Task 047
LOCATION:	E. 171st St. E. of Gr. Conc.
GROUND ELEVATION:	NA
DATE STARTED:	February 11, 2016
DATE FINISHED:	February 11, 2016
DRILLER:	Ryan Jensen
GEOLOGIST:	Scott Swanson
REVIEWED BY:	

PROJECT: Grand Concourse Phase 3, from 170th to 175th Streets, Bronx No. HWXP136B

CLIENT: Department of Design and Construction - OEGS TASK ID NO. 10806

BORING CONTRACTOR: Associated Environmental Services, Ltd.

GROUNDWATER: NA

	CAS.	SAMPLER	TUBE
TYPE			
DIA.	NA		
WT.	NA		
FALL	NA		

DATE	TIME	LEVEL	TYPE
N/A			NA

DEPTH FEET	SAMPLE STRATA	"S" NO.	"N" NO.	BLOWS PER 6"	REC% RQD%	DESCRIPTION COLOR	CONSISTENCY HARDNESS	MATERIAL DESCRIPTION	USCS	REMARKS PID
1					NA	dk. Brown	NA	gravelly silty soil, some sand	SM	0.0 ppm
								some mica schist fragments		
								silty SAND, some mica schist frags.		moist
								solid rock(mica schist) at 4'		
								Rock Refusal at 4 feet		
6										
10										
15										
20										
25										
30										
35										

COMMENTS: Grab sample collected @ 3.5 - 4.0 ftbg for TCL VOCs. Composite sample collected from 0.5-4.0 ftbg for PAHs, TCLP RCRA Metals, PCBS, TPHC DRO/GRO, and RCRA Characteristics. Soil was classified according to the Unified Soil Classification System (USCS).

PROJECT NO.: 15-008-0265 Task: 047

BORING NO.: SB-10

(NO TEXT ON THIS PAGE)

U - PAGES

SECTION U (VERSION 2.0)

NOTICE

THE PAGES CONTAINED IN THIS SECTION U VERSION 2.0 (U-PAGES) REPRESENT ADDITIONAL CONTRACT REQUIREMENTS APPLYING TO WORK PERFORMED IN THE PRESENCE OF PRIVATELY OWNED UTILITY FACILITITIES.

(NO TEXT ON THIS PAGE)

SECTION U VERSION 2.0

DATED: March 9, 2015

1. The Contractor shall be responsible for compliance with all the provisions of the following Sections and Schedules, which are hereby made a part of the original contract documents:

   A. "SECTION U: Additional Contract Requirements Applying to Work Performed in the Presence of Privately Owned Utility Facilities" (Pages U-3 through U-13)

   B. Schedule U-1 (Page U-14)

   C. Schedules U-2 listing scope of utility interferences is no longer included in City contract. Such information will be part of Interference Agreement between Utility Operator and Contractor.

   D. Section U-3 Page U-15 (as per the Private Utilities reference document for SECTION U called "CET SPECIFICATIONS AND SKETCHES", dated November 2010).

2. Each facility operator shall provide inspectors at the work site to inspect methods of interference work, verify quantities and items of Utility Work, and coordinate all phases of the facility operator operations.

3. In addition, the following statements are made to provide clarification of various paragraphs under Section U:

   A. Section U, ¶3, requires the Contractor to immediately commence negotiations with each Company for an Interference Agreement under which the Company will compensate the Contractor for any Interference Work which the Company does not elect to perform with its own forces or by specialty contractors retained by the Company. Thus the Contractor is on notice that its work under the Contract may be affected by Interference Work performed by (a) the Contractor pursuant to a separate Interference Agreement with the Company, (b) the Company, or (c) partly by each.

   B. The City has no contract with any of the Companies for work on or adjacent to the site of work under this Contract, and the Companies are not "Other Contractors" as defined for the purposes of this Contract. The Contractor is reminded, however, that pursuant to Section U, ¶3, the City will not compensate the Contractor for any direct and/or indirect costs related to Interference Work, regardless of whether such Interference Work is covered by an Interference Agreement between the Contractor and the Company or is performed by the

Company using its own forces or by specialty contractors retained by the Company.

C. Section U, ¶13, provides that the provisions of Section U are material provisions of the Contract and that the Contractor's failure to comply with the procedures set forth in Section U are sufficient for the Commissioner to declare the Contractor in default pursuant to Article 48 of the Contract.

Pursuant to this Amendment, the Contractor is informed that the Performance Bond required of the Contractor pursuant to the Contract is not deemed to guarantee performance of any of the Interference Work.

Section U: Additional Contract Requirements Applicable to Work Performed in the Presence of Privately Owned Utility Facilities

The Contractor is hereby notified that pursuant to the law and franchise agreements issued by the City, certain private utility and public service companies named in Schedule U-1 ("the Companies") own and/or operate surface and/or subsurface facilities within the limits of this contract. The existence of these facilities impacts the productivity of the City work called for in the contract. In order to improve coordination of the City construction with the private utility facilities owned and/or operated by the Companies named in Schedule U-1, Article 1.06.30 of the Standard Highway Specifications of the New York City Department of Transportation, Dated August 1, 2015; and/or Articles 10.15 through 10.18 of the Standard Sewer and Water Main Specifications of the New York City Department of Environmental Protection, Dated July 1, 2014; as applicable, are amended and will be implemented as follows:

1. Means and methods for City work:

a) The Contractor is hereby notified that the utility interferences may impact the performance of, and/or interferes with, City work. The contractor will be required to perform such utility work as directed by the Resident Engineer in order to clear all utility interferences from the project site as required for satisfactory completion of City work within specified contract schedule.

b) In areas serviced by overhead electric system, the contractor understands and by bidding for this contract agrees that he/she will be required to perform the public work in the presence of energized electrical overhead lines and appurtenances located in areas adjacent and/or within the project area. As a consequence he/she will select means and method of construction appropriate to maintain the safety clearances required or as permitted by electric operators in order to avoid damaging the insulation or shielding of these lines and also to prevent knocking them down.

2. Field inspection prior to construction:

Prior to the start of any contract work in areas serviced by overhead electric lines, and after the award to the apparent low bidder for this contract, the contractor must request a field walk of the project area along with the operator of the overhead electrical facilities and the DDC

Engineer-In-Charge. At that time the facility operator will confirm the type and condition of the overhead electrical lines and the sufficiency of their insulating properties with respect to the means and methods proposed by the contractor. The contractor must be prepared to describe in enough details his/her proposed means and methods of construction operations in order to anticipate the likelihood that electric lines insulation would be cut or otherwise compromised. Also such details will allow the facility operator to anticipate the need for added insulation and/or shielding of non-insulated lines.

3. Compensation for interference work:

Compensation for Interference Work is a matter of adjustment between the Contractor and each private utility company located within the limits of the project area and whose utility facilities are affected by City contract work. In particular, the City will not compensate the Contractor for any direct and/or indirect costs related to Interference Work, including, but not limited to, lost profit, increased overhead, or any other impact costs. Upon receipt of a Notice of Award from the City, the Contractor shall immediately commence negotiations with each of the Companies concerning the manner in which and the price for which the Contractor, through its own forces or by others hired by it, will perform and be paid by the Company for all necessary Interference Work as defined above, and at known locations of City contract work, that the Company(ies) choose(s) not to perform with its(their) own forces or by specialty Contractors hired by it (them) (as per "Interference Agreement"). (Specialty contractors' work is limited to (i) insulation installation and removal, (ii) live gas and steam work, (iii) cleanup and disposal of hazardous materials, (iv) splicing live electrical and telecommunications facilities, and (v) work not traditionally performed by general construction contractors.

4. Interference Agreement:

1. Although the parties may negotiate an Interference Agreement in any format or manner they deem fit, the Contractor is hereby advised that the Companies have indicated to the City that they will agree to compensate the Contractor on a unit price basis for Types of Interferences encountered on this Contract in accordance to the Private Utilities reference document for SECTION U called "CET SPECIFICATIONS AND SKETCHES", dated November 2010, copy of which is available on demand.

2. The Contractor shall notify the City upon concluding an Interference Agreement with each of the Companies.

5. City contract work to continue without Interference Agreement :

If, prior to the start of construction, as directed by the City's Order to work / Notice To Proceed (OTW/ NTP) date any of the Companies and the Contractor have not concluded an Interference Agreement as described above, then the City shall issue a written "48 Hours notice to Public Corporation" as prescribed by the City of New York Administrative Code", commonly referred to as "Order-Outs" and City construction will proceed as ordered and the Contractor will be directed by the Resident Engineer to perform the City work on Time, Material and Equipment basis (T&M) as specified in standard City contract agreement Article 26.2. T&M records will include identification of types of utility facilities interfering with City work, utility facility owners, specifying the nature and quantity of any materials, plant and equipment furnished or used in connection with the performance of such work and crew size, such as: name and number of each worker employed on such work. T&M records will also indicate the hours of active time, standby time and idle time. The Company (ies) and the Contractor will maintain separate records of the actual quantity and cost of labor, materials, and equipment expended, and will provide copies of this information to the other party on a daily basis for reconciliation. These T&M records along with cost evaluations will be submitted daily to the Resident Engineer for review and approval. The total cost of City work will be based on quantity of work performed multiplied by unit price contract bid items. The total interference cost will be calculated as the difference between the total T&M cost and total cost for City work. The Resident Engineer will conduct a monthly reconciliation session of the daily T&M records with the affected Company (ies) and contractor. If the contractor and affected utility companies cannot reconcile their T&M records, by the last day of each month, then the Resident Engineer will submit the approved City's T&M records along with total cost evaluations to the DDC Director of Construction who will review these records and recommend approval and validity certification by the DDC Deputy Commissioner.

1. Copies of the DDC approved and certified T&M records will then be transmitted by the DDC to the contractor and the utility companies. These certified records may be used by the contractor for compensation claims against the responsible private facility

owners, or may be used by any party as supporting documentation in dispute regarding compensation for performing Interference Work. The contractor will be required to perform City work while invoices are submitted by the contractor to the Utility companies for payment within 30 days, or while compensation disputes between contractor and affected company (ies) are submitted to Binding Arbitration process described in Paragraph 9.

2. All issues related to utility work and/ or delays due to compensation disputes or claims against utility companies are not allowable as justification for granting contract time extensions or delay claims against the City. The City may assess liquidated damages specified in the contract for net overall delays suffered by City contract work as a result of utility issues, disputes and claims.
3. The standard City contract dispute resolution process specified in Article 27 "Presentation of disputes to Commissioner", of the standard City contract agreement is not applicable to any disputes related to utility work and/ or compensation for such work or claim against utility companies. Utility work issues, disputes and claims may only be submitted to Binding Arbitration process described in Paragraph 9.
4. The contractor will notify the Resident Engineer when utility work that require the intervention of company utility specialty crews causes excessive contractor's labor and equipment standby or idleness and, thereby jeopardizing the City project schedule. The Resident Engineer will submit the facts to the DDC Director of construction who will recommend to the Deputy Commissioner regarding the issuance of a "48 hours notice" to the concerned utility company as authorized by the New York City administrative Code Section 19-143 and/ or Section 24-521 as applicable.
5. Utility delays caused by utility and/ or by unavailability of utility specialty crews cannot be discounted for earning any contractual bonus when such bonus clause is included in a contract. However, if such specified bonus is not earned or disallowed by the City or if the City assesses specified liquidated damages as a result of such excessive delays, the contractor may seek damages from the responsible utility company (ies).

6. Extra utility work with Utility Agreement:

If during construction the Contractor encounters utility facilities interferences or utility scope of work that it believes is not covered by the Interference Agreement as described above, then the Contractor shall immediately notify the Company in writing, with a copy to the City, describing the nature and location of the extra work in question. The Company then has five (5) business days to investigate the conditions and then:

1. Advise the Contractor and the City in writing that no interference with its facilities exists at the location in question, and hence that the Contractor may proceed with City work without providing for any impact from Company facilities;
2. Advise the Contractor and the City in writing that the Interference Agreement negotiated pursuant to Paragraph 4, provides for the scope of work encountered.
3. Advise the Contractor and the City in writing that it intends to perform the necessary utility Work with company forces or with its own contractor including, but not limited to, relocating its facility out of the way of the proposed City work. In this case, the Company shall provide a written schedule for the performance of the utility work it proposes to perform, which shall be subject to approval by the City based on its impact to the Contractor's currently approved progress schedule. Upon approval of the Company's schedule by the City, the Contractor shall provide access to the worksite to the Company and/or any contractors hired by it to perform this utility work. If necessary, the City may grant a contract time extension for delays caused by the performance of such utility work by the company.
4. Reasonably specify in writing the scope of work to be performed by the Contractor on behalf of the Company that is not covered under the Interference Agreement negotiated pursuant to Paragraph 5, including, but not limited to, relocating, supporting, and/or protecting the Company's facilities, and/or shifting the City facility if approved by the Resident Engineer, and/or otherwise changing its operations to work in the presence of the Company's facilities. Should the Company elect this option, it must adequately define and provide an initial price offer for the work required to be performed.

7. Means and Methods for utility work:

Upon receipt of the Company's determination pursuant to paragraphs 6.2, or 6.4, above, the Contractor shall determine reasonable means and methods of performing the work defined by the Company. These means and methods are subject to approval of the Company, which shall not be unreasonably withheld. If, however, the Company objects to the Contractor's proposed means and methods then it shall define an alternate method of construction. Upon receipt of the Company's approval or its proposed alternate method of construction, the Contractor shall commence performance of the work defined by the Company as soon as possible, and shall perform the work in a good, workmanlike, and efficient manner, using the means and methods approved by the Company, in order to permit the City work to proceed in the most expeditious manner possible, but without imposing unreasonable and/or unnecessary costs on the Company. It is expressly understood by all parties that the City's rights pursuant to Article 4 of the Contract apply to Utility Work performed pursuant to this section.

8. Disputed utility work covered by a utility agreement:

The City Work will continue as described in paragraph 5 above. In the event of any dispute between the Company (ies) and the Contractor regarding any issue related to the performance of, or payment for, utility work, including, but not limited to, any indirect or impact costs incurred by the Contractor due to the Utility Work and/or to the existence of facilities owned or operated by the Company (ies) on the line of the work. The Company (ies) and the Contractor hereby agree to submit to each other a "Final Offer," in writing, by certified mail. Each party shall then have three business days to consider each other's Final Offer. In the event that neither party accepts the other's Final Offer within those three days, the Company (ies) and the Contractor agree to immediately submit the dispute to binding arbitration as described in Paragraph 9. During the pendency of any arbitration, the Company (ies) and the Contractor shall maintain separate records of the actual quantity and cost of labor, materials, and equipment expended, and to provide copies of this information to the other party on a daily basis for reconciliation. Any and all disagreement with the records maintained and provided by the other, must be documented in writing to all parties. However, these records are solely for the benefit of presentation to the arbitrator, whose decision may not necessarily be based on these records and in any event is final. Both parties should be aware that the City will not

confirm or deny the accuracy of any records maintained by either party for Utility work performed pursuant to a Utility Agreement. While the arbitration is pending, the Company shall pay the Contractor on a monthly basis, based on the price offered by the Company to the Contractor for the performance of the work.

9. Arbitration of utility work:

The arbitration of the issues described above shall be conducted pursuant to the Construction Industry Arbitration Rules of the American Arbitration Association (hereinafter "the Rules" and "AAA") in effect on the date the arbitration is initiated except as set forth herein. The arbitration award shall be final and binding upon the parties to the arbitration and judgment upon the award may be entered in a court having jurisdiction.

(a) Once an arbitrator(s) has been appointed by the AAA, the arbitration shall be scheduled as promptly as possible given the arbitrator(s) and the parties' schedules.

(b) No later than seven days prior to the first arbitration hearing, Company and Contractor shall submit to the arbitrator(s), and to each other, a summary of each party's respective position and such other information as is deemed appropriate, along with a copy of each party's Final Offer as specified in paragraph 8.

(c) The arbitration shall be conducted and concluded in two days.

(d) On the morning of the first day of the arbitration, Contractor and/or representatives shall have 3 ½ hrs to make a presentation of its claim to the arbitrator. During its presentation, Contractor shall not be permitted to produce any documents or cost records which have not already been provided to the Company. Contractor shall be permitted to produce any analysis or description of its claim which has been prepared for the purpose of its presentation.

(e) After lunch, Company and/or its representatives shall have two hours to ask Contractor questions about its claim and its presentation. Thereafter the arbitrator(s) shall have two hours to ask Contractor questions about its claim and its presentation.

(f) On the morning of the second day of the arbitration, Company and/or its representatives shall have 3 ½ hours to make a presentation of its claim to the arbitrator. During its presentation, the Company shall not be permitted to produce any documents or cost records which have not already been provided to the Contractor. The Company shall be

permitted to produce any analysis or description of its claim which has been prepared for the purpose of its presentation.

(g) After lunch, Contractor and/or its representatives shall have two hours to ask Company questions about its claim and its presentation. Thereafter the arbitrator(s) shall have two hours to ask Company questions about its claim and its presentation.

(h) Subject to the above time limitations, the arbitrator(s) may conduct the arbitration in such manner as the arbitrator(s) deems reasonable.

(i) The arbitrator(s) shall then have one week to select in writing, as the arbitrator ('s) award, that party's Final Offer which appears to be more reasonable, based on the presentations at the arbitration hearings.

(j) The arbitrator shall have no discretion to grant an award other than one of the two Final Offers submitted by the parties.

(k) Any award for work that has already been performed shall be paid on the 7th day after receipt of the arbitrator's decision, or on the 30th day after completion of the work, whichever is later. Payment for work not yet completed at the time of the arbitrator's decision shall be paid within 30 days of completion of work. Interest shall accrue from the date payment is due at the rate of 9% per annum. Either party may cause judgment to be entered in accordance with the arbitrator(s) decision in a court in the State of New York, County of New York.

(l) The arbitrator's fees and any other costs of the arbitration shall be initially shared equally by Company and Contractor. The non-prevailing party shall then pay all arbitrator's fees and costs of the arbitration and shall reimburse the prevailing party for its share of such fees and costs theretofore paid.

(m) The parties may, at any time, settle any matter submitted to arbitration.

10. Order-out waiver:

The Contractor and all subcontractors hired by it, if an Interference Agreement is executed as specified between the concerned parties, agree to waive any rights they may have, if any, under law, contract or otherwise to compel the City to assert any right the City may have, including the issuance of any directives required under the New York City Administrative Code, Section 19-143 and Section 24-521, to require any or all of the Companies to maintain, repair, replace, protect, support, shift, alter, relocate, and/or remove utility facilities in connection with the

work to be performed under this contract. However, nothing in this section shall preclude the City from exercising its rights under the Law to issue such a directive to the Company.

11. Cost of insurance:

Each of the named Companies, at their option and if an Interference Agreement is executed as specified between the concerned parties, may be named as an additional insured on all insurance policies required to be maintained under this contract. In the event that a Company opts to be so named as an additional insured, the actual incremental cost, if any, to the Contractor of providing such insurance coverage shall be borne by that Company. The Contractor shall provide a written statement from its insurance provider documenting the actual cost of this added coverage to the Company. Under no circumstances shall the cost of insurance coverage on behalf of any Company be borne by the City. Nothing in this paragraph shall be interpreted to imply the City's acceptance of any additional responsibility or liability for any matter related to the performance of Utility Work. In particular, the Company and the Contractor bear joint and full responsibility to ensure that any Utility Work performed by the Contractor is in compliance with all applicable government and Company regulations.

12. Cost of utility interference work:

The Companies, by virtue of a prior agreement with the City, have agreed to perform their obligations described in this section. It is expressly understood that the cost of Utility Work or any delays cost cause by such utility work shall not be a charge against the City, but shall be a matter for adjustment between the Contractor and the Company or Companies concerned. The City and the Contractor agree that the Companies are third party beneficiaries of this section of the contract, if a Utility Agreement is executed between the contractor and utility company (ies). The provisions of this section shall govern in all cases where Company property interferes with or is about to be disturbed by the City work, notwithstanding any other provision of the Contract, except for Natural Gas transmission/distribution facilities covered subject to the Gas Facility Cost Allocation Act (GFCAA) and covered separately in this contract.

13. Default declaration:

The Contractor agrees that the provisions of this section are material provisions of the contract, and that the Contractor's failure to comply with the procedures set forth above are sufficient

for the Commissioner to declare the Contractor in default pursuant to Article 48 of the Contract.

14. NYS Labor Law:

The Contractor is hereby advised that New York State Labor Law applies to public work. The work described in this Section U of the contract performed by utility company (ies) with their own forces or vendors hired by such company (ies) is not public work.

15. Facility operators:

The insurance requirements in Paragraph 11 of this Section U apply to: (i) additional Companies, if any, who were not named in Schedule "A" but which have executed a Utility Agreement with the contractor for utility work; and (ii) additional coverage, if any, paid for by Utility Companies whose utility facilities are located within the project limits, that they may require for the utility work pursuant to an utility agreement between the contractor and such utility companies.

[End]

"STANDARD UTILITY LETTER OF AGREEMENT"

(Name)
Deputy Commissioner, Infrastructure Division
Department of Design and Construction
30-30 Thomson Avenue
Long Island City, NY 11101

RE: City Work Performed in the Presence of Private Utility Facilities
Project No: _____

Dear (Name):

This letter is to certify that _____, has requested the inclusion of the attached "Section U: Additional contract requirements applying to work performed in the presence of privately owned utility." The company agrees to abide by the terms of this Section U at the company's own expenses due to their facilities interferences with the Public work.

Sincerely,

_____
By: Authorized Company Representative

_____
Title

NOTARY PUBLIC

CERTIFIED AS TO FORM
AND LEGAL AUTHORITY:

By:_____

SCHEDULE U-1

SCHEDULE U-1 **LISTING OF COMPANIES NAMED FOR THIS CONTRACT**

COMPANY NAME	CONTACT NAME	CONTACT TELEPHONE
CON EDISON	THERESA KONG	212-460-4834
ECS	AUBREY MAKHANLALL	718-977-8165

SECTION U-3

(NO TEXT IN THIS SECTION)

(NO TEXT ON THIS PAGE)

CITY OF NEW YORK
DEPARTMENT OF DESIGN AND CONSTRUCTION
DIVISION OF INFRASTRUCTURE

ADDENDA CONTROL SHEET

BID OPENING DATE: September 30, 2016

PROJECT NO.: HWXP136B

TITLE: RECONSTRUCTION OF OF GRAND CONCOURSE SERVICE ROADS

ADDENDA ISSUED	No. OF DRAWINGS	DATE
#1: Additional Amendments	0	09/23/2016

ATTACH TO CONTRACT DOCUMENTS

THE CITY OF NEW YORK
DEPARTMENT OF DESIGN AND CONSTRUCTION

DIVISION OF INFRASTRUCTURE
BUREAU OF DESIGN

PROJECT ID: HWXP136B

RECONSTRUCTION OF GRAND CONCOURSE SERVICE ROADS,
RESURFACING OF THE MAIN ROADWAY AND WIDENING OF MEDIANS
FROM EAST 171ST STREET TO EAST 175TH STREET

INCLUDING SEWER, WATER MAIN, STREET LIGHTING, AND TRAFFIC SIGNAL WORK

Together With All Work Incidental Thereto

BOROUGH OF THE BRONX
CITY OF NEW YORK

ADDENDUM NO. 1

DATED: September 23, 2016

THIS ADDENDUM IS HEREBY MADE A PART OF THE CONTRACT DOCUMENTS

1. Refer to the Bid and Contract Documents, Volume 3 of 3, I-PAGES, pages I-25 through I-48;
   Delete pages I-25 through I-48, in their entirety;

2. For additional information, see the attached 1(one) page of "Questions Submitted by Bidders and DDC's Responses".

By signing in the space provided below, the bidder acknowledges receipt of this Addendum consisting of one (1) page, one(1) page of attcahments.

THIS ADDENDUM MUST BE SIGNED BY ALL BIDDERS AND ATTACHED TO THEIR BIDS.

for Purnima Dhavan
Mohsen Zargarelahi, P.E.
Assistant Commissioner

_____
Name of Bidder

By:_____

ADDENDUM NO.1

QUESTIONS SUBMITTED BY BIDDERS AND DDC RESPONSES

QUESTION 1 HOW IS THE CONTRACTOR PAID FOR REMOVING THE EXISTING CONCRETE SIDEWALKS AT THE MEDIANS OF THE GRAND CONCOURSE BLVD. TO INSTALL THE NEW GRANITE BLOCK SIDEWALKS ITEM 6.06AB?

DDC RESPONSE THE PRICE OF REMOVING THE EXISTING SIDEWALK IS DEMMED INCLUDED IN THE COST OF ITEM 6.06 AB.

QUESTION 2 ON SHEET 28 (U-1) AND 29 (U-2), THERE ARE CONFLICTS BETWEEN THE PLANS AND PROFILES. THE PLANS SHOW SOME OF THE MANHOLES AS TYPE A-2, BUT THE SAME MANHOLES WOULD BE SHOWN AS TYPE A-1 IN THE PROFILE. PLEASE VERIFY.

DDC RESPONSE UTILITY PLAN DRAWINGS ARE CORRECT. MATCH THE PROFILE DRAWINGS TO THE PLAN DRAWINGS.

QUESTION 3 DRAWING DET 5 CALLS FOR REPLACEMENT OF EXISTING SUBWAY GRATING. IT IS NOT CLEAR UNDER WHAT PAY ITEMS REMOVAL OF EXISTING CONCRETE AND PLACEMENT OF NEW CONCRETE ARE TO BE PAID

DDC RESPONSE REFER TO "MATERIALS" UNDER NYCDOT SPECIFICATION SECTION 7.01.3

QUESTION 4 DRAWING DET 1 NOTE 3 CALLS FOR TEST PITS WITH NO SEPARATE PAYMENT WITHOUT PROVIDING ASBUILTS TO ASCERTAIN EXTENT OF WORK.

DDC RESPONSE TEST PITS SHALL BE PAID FOR UNDER ITEM NO. 9.00 C.

QUESTION 5 DRAWING DET 5 NOTE 3 CALLS FOR HEAVY DUTY GRATING. NO LOCATIONS ARE INDICATED

DDC RESPONSE NOTE 3 SHALL BE CHANGED TO 'NO TEXT'.

QUESTION 6 DRAWING SHEET 6 NOTE 15.36 CALLS FOR DOWELS/KEYWAYS AS PER MTA STANDARDS. PLEASE RECONCILE THESE REQUIREMENTS WITH DETAILS AS PER DRAWING DET 5

DDC RESPONSE DOWEL BARS ARE REQUIRED PER NOTE 15.36, BUT NOT SHOWN ON DRAWING DETAIL 5 FOR CLARITY.

QUESTION 7 HIGHWAY CONSTRUCTION PROFILES FOR MAIN ROAD AS PROVIDED ARE CONFUSING AND DO NOT ALLOW UNDERSTANDING OF SCOPE OF WORK. PLEASE DEFINE MEDIAN 1 AND 2 IN C SERIES DRAWINGS. DRAWING HP 7 EAST SIDE INDICATES ONE SOLID LINE. WEST SIDE INDICATES 2 SOLID LINES. NO LEGEND FOR THESE CONDITIONS IS PROVIDED. PLEASE REVISE IT IN ACCORDANCE WITH REQUIREMENTS OF NYC DOT SCARA GUIDELINES AND SEPARATE MEDIAN 1 AND 2 INTO SEPARATE PROFILES.

DDC RESPONSE BOTH EAST AND WEST ELEVATIONS ARE SHOWN ON THE PROFILES. THE CONTRACTOR SHALL REFER TO EITHER EAST OR WEST PROFILE FOR THE RESPECTIVE INFORMATION. THE EXTRA LINE WHICH WAS SHOWING PROPOSED BOTTOM OF CURB SHALL BE REMOVED FROM SHEET HP-7 AND HP-8.

Print

for Please select search parameters

Project Number:	HWXP136B	Project Description(s):	RECONSTRUCTION OF THE GRAND CONCOURSE SERVICE ROADS, ETC. - BOROUGH OF THE BRONX

Receipt Number	Contractor	Book Number	Date
DC - 000036160	CAC INDUSTRIES 54-08 VERNON BLVD LONG ISLAND CITY, NY 11101 **Phone:** (718) 729-3600 **Fax:** (718) 729-0400 **Cell:** N/A	4 & 7	9/9/2016
DC - 000036162	DEBOE CONSTRUCTION CORP. 6 ELKS COURT HUNTINGTON, NY 11743 **Phone:** (516) 997-9615 **Fax:** (631) 271-7555 **Cell:** N/A	6	9/12/2016
DC - 000036164	ADC CONSTRUCTION, LLC 58-08 48TH STREET MASPETH, NY 11378 **Phone:** (718) 628-5555 **Fax:** (718) 628-5142 **Cell:** N/A	8	9/12/2016
DC - 000036171	BEDFORD CARP CONSTRUCTION, INC 77 BLOOMFIELD AVENUE STATEN ISLAND, NY 10314 **Phone:** (718) 494-8600 **Fax:** (718) 494-7666 **Cell:** N/A	11	9/15/2016
DC - 000036172	LAWS CONSTRUCTION CORP. 34 IRVINGTON ST. PLEASANTVILLE, NY 10570 **Phone:** (914) 741-2100 **Fax:** (914) 741-2150 **Cell:** N/A	10 & 13	9/16/2016
DC - 000036178	P & T II CONTRACTING CORP 10617 153RD ST JAMAICA, NY 11433 **Phone:** (718) 206-0245 **Fax:** (718) 206-0083 **Cell:** N/A	16	9/19/2016
DC - 000036180	TRIUMPH CONSTRUCTION CORP 1354 SENECA AVENUE BRONX, NY 10474 **Phone:** (718) 861-6060 **Fax:** (718) 861-6660 **Cell:** N/A	12	9/20/2016

Print

** Transmit Confirmation Report **

P.1
D D C

Fax:718-391-2615

Sep 23 2016 05:07pm

Name/Fax No.	Mode	Start	Time	Page	Result	Note
917187290400	Normal	23,04:52pm	3'05"	3	* O K	BrdCast
9163127175555751467 6#--	Normal	23,04:55pm	1'03"	3	* O K	BrdCast
917186285142-	Normal	23,04:57pm	1'24"	3	* O K	BrdCast
917184947666	Normal	23,04:59pm	0'58"	3	* O K	BrdCast
9191474121505751467 6#---	Normal	23,05:00pm	1'17"	3	* O K	BrdCast
917182060083	Normal	23,05:02pm	1'22"	3	* O K	BrdCast
917188616660	Normal	23,05:06pm	1'23"	3	* O K	BrdCast

CITY OF NEW YORK
DEPARTMENT OF DESIGN AND CONSTRUCTION
DIVISION OF INFRASTRUCTURE

ADDENDA CONTROL SHEET

BID OPENING DATE: September 30, 2016

PROJECT NO.: HWXP136B

TITLE: RECONSTRUCTION OF OF GRAND CONCOURSE SERVICE ROADS

ADDENDA ISSUED	No. OF DRAWINGS	DATE
#1: Additional Amendments	0	09/23/2016

Department of Design and Construction

INFRASTRUCTURE DIVISION
BUREAU OF DESIGN

VOLUME 3 OF 3

PROJECT ID: HWXP136B

RECONSTRUCTION OF GRAND CONCOURSE SERVICE ROADS, RESURFACING OF THE MAIN ROADWAY AND WIDENING OF MEDIANS FROM EAST 171ST STREET TO EAST 175TH STREET

INCLUDING SEWER, WATER MAIN, STREET LIGHTING, AND TRAFFIC SIGNAL WORK

Together With All Work Incidental Thereto

BOROUGH OF THE BRONX
CITY OF NEW YORK

_____

Contractor.

_____

Dated_____, **20**____

_____