Department of Design and Construction

THE CITY OF NEW YORK
DEPARTMENT OF DESIGN AND CONSTRUCTION
DIVISION OF INFRASTRUCTURE

30-30 THOMSON AVENUE
LONG ISLAND CITY, NEW YORK 11101-3045
TELEPHONE (718) 391-1000
WEBSITE www1.nyc.gov/site/ddc/index.page

LAW

VOLUME 1 OF 3

BID BOOKLET

FOR FURNISHING ALL LABOR AND MATERIALS NECESSARY AND REQUIRED FOR:

PROJECT ID: GCJA03-2B

CONSTRUCTION OF RIGHT-OF-WAY GREEN INFRASTRUCTURE IN THE CSO TRIBUTARY AREA JAM-003 AND JAM-003A

Together With All Work Incidental Thereto

BOROUGH OF QUEENS
CITY OF NEW YORK

FOR THE DEPARTMENT OF ENVIRONMENTAL PROTECTION
PREPARED BY

NV5

DECEMBER 17, 2018

19-039

Department of Design and Construction

Lorraine Grillo
Commissioner

Jamie Torres-Springer
First Deputy Commissioner

Justin Walter
Chief Administrative Officer
Administration

Nicholas Mendoza
Agency Chief Contracting Officer

Lorraine Holley
Deputy ACCO

June 14, 2019

CERTIFIED MAIL - RETURN RECEIPT REQUEST
PCI INDUSTRIES CORP
550 FRANKLIN AVE
MT. VERNON, NY 10550

RE: FMS ID: GCJA03-2B
E-PIN: 85019B0012001
DDC PIN: 8502019HW0004C
CONSTRUCTION OF RIGHT-OF-WAY GREEN INFRASTRUCTURE IN THE CSO TRIBUTARY AREA JAM-003 AND JAM-003A- BOROUGH OF QUEENS
NOTICE OF AWARD

Dear Contractor:

You are hereby awarded the above referenced contract based upon your bid in the amount of $19,123,370.00 submitted at the bid opening on April 01, 2019. Within ten (10) days of your receipt of this notice of award, you are required to take the actions set forth in Paragraphs (1) through (3) below. For your convenience, attached please find a copy of Schedule A of the General Conditions to the Contract, which sets forth the types and amounts of insurance coverage required for this contract.

(1) Execute two copies of the Agreement in the Contracts Unit, 30-30 Thomson Avenue, 1st Floor, Long Island City, New York (IDCNY Building). A Commissioner of Deeds will be available to witness and notarize your signature. The Agreement must be signed by an officer of the corporation or a partner of the firm.

(2) Submit to the Contracts Unit two properly executed performance and payment bonds. If required for this contract, copies of performance and payment bonds are attached.

(3) Submit to the Contracts Unit the following insurance documentation: (a) original certificate of insurance for general liability in the amount required by Schedule A, and (b) original certificates of insurance or other proof of coverage for workers' compensation and disability benefits, as required by New York State Law. The insurance documentation specified in this paragraph is required for registration of the contract with the Comptroller's Office.

Department of Design and Construction

On or before the contract commencement date, you are required to submit all other certificates of insurance and/or policies in the types and amounts required by Schedule A. Such certificates of Insurance and/or policies must be submitted to the Agency Chief Contracting Office, Attention: Risk Manager, Fourth Floor at the above indicated department address.

Your attention is directed to the section of the Information for Bidders entitled "Failure to Execute Contract". As indicated in this section, in the event you fail to execute the contract and furnish the required bonds within the (10) days of your receipt of this notice of award, your bid security will be retained by the City and you will be liable for the difference between your bid price and the price for which the contract is subsequently awarded, less the amount of the bid security retained.

Sincerely,

Lorraine Holley

Lorraine Holley
Deputy ACCO

30 - 30 Thomson Ave L.I.C., NY 11101 Telephone: 718-391-2601 Facsimile: (718) 391-2627 www.nyc.gov/buildnyc

NOTICE TO BIDDERS

The Bidder's attention is directed to the following requirements in this contract that differ from previous Green Infrastructure contracts:

1. Cost of earth excavation as per NYC DOT Section 4.11 and sawcutting as per NYC DOT Section 6.55 for the construction of GI Practices is included in the cost of all bid items.

2. Liquidated Damages requirements have been revised.

3. The Maintenance of GI Site will be paid in increments throughout the life of the contract under section GI-7.13E.

4. Work performed under Section 4.16, Section 4.17 and Section 4.20 will be paid in increments throughout the life of the contract.

5. Revised versions of the following Standard Specifications are included in sections 4.10, 4.16, 4.17, 2.26. These sections remove and replace the existing NYCDOT Standard Specifications 4.10, 4.16, 4.17 and 2.26. All plant materials and establishment of plant materials must meet the requirements of special sections 4.10, 4.16 and 4.17.

6. The Guarantee Period for all constructed and installed work will be twelve (12) months.

7. The retainage for work has been increased to ten-percent (10%).

8. The deposit guarantee sum has been increased to five-percent (5%). In order to obtain the deposit, litter and accumulated sediment must be removed from the constructed GI practices bi-weekly as per implementation of Section GI-7.13E so as to ensure a thriving [if applicable] and functioning GI practice.

9. The performance and payment bonds for the GI contracts has been reduced to equal fifty percent (50%) of the Contract Price.

Bidders are advised that this is not an exhaustive list.

Notices to Bidders

Pre-Bid Questions (PBQs)

Please be advised that PBQs should be submitted to the Agency Contact Person (CSB_projectinquiries@ddc.nyc.gov) at least five (5) business days (by 5:00 PM EST) prior to the bid opening date as indicated in ATTACHMENT 1 - BID INFORMATION, page A-1 and SCHEDULE B, page 13, VOLUME 1 OF 3 of this BID BOOKLET.

All PBQs must reference the Project ID. If a Bidder has multiple PBQs for the same Project ID, the PBQs must be numbered sequentially, even if they are submitted separately.

Apprenticeship Program

If Apprenticeship Program is required as noted on Page 19 of this BID BOOKLET, the following notice applies:

Please be advised that, pursuant to the authority granted to the City under Labor Law §816-b, the New York City Department of Design and Construction hereby requires that the contractor awarded a contract as a result of this solicitation, and any of its subcontractors with subcontracts worth two million dollars or over, have, prior to entering into such contract or subcontract, apprenticeship agreements appropriate for the type and scope of work to be performed that have been registered with, and approved by, the New York State Commissioner of Labor. In addition, the contractor and its subcontractors will be required to show that such apprenticeship program/s have successfully passed the two year Probation period following the initial registration date of such program/s with the New York State Department of Labor.

The failure to prove, upon request, that these requirements have been met shall result in the contract not being awarded to the contractor or the subcontractor not being approved.

Please be further advised that, pursuant to Labor Law §220, the allowable ratio of apprentices to journeypersons in any craft classification shall not be greater than the ratio permitted to the contractor as to its workforce on any job under the registered apprenticeship program.

Notices to Bidders

PASSPort Disclosure Filing

All vendors that intend to do business with the City of New York must complete a disclosure process in order to be considered for a contract. This disclosure process was formerly completed using Vendor Information Exchange System (VENDEX) paper-based forms. The City of New York has moved collection of vendor disclosure information online. In early August 2017, the New York City Mayor's Office of Contract Services (MOCS) launched the **Procurement and Sourcing Solutions Portal (PASSPort)**, a new online procurement system that replaced the paper-VENDEX process. In anticipation of awards, all bidders must create online accounts in the new PASSPort system, and file all disclosure information using PASSPort. **Paper submissions, including certifications of no changes to existing VENDEX packages will not be accepted in lieu of complete online filings**.

All vendors that intend to do business with the City, but specifically those that fall into any of the following categories, are required to enroll:

- Have a pending award with a City Agency; or
- Hold a current contract with a City Agency and have either an expiring VENDEX or expiring Certificate of No Change.

The Department of Design and Construction (DDC) and MOCS hereby notifies all proposers that the PASSPort system is available, and that disclosure filing completion is required prior to any award through this competitive bid.

To enroll in PASSPort and to access the PASSPort website (including online training), please visit www.nyc.gov/passport. Contact MOCS at passport@mocs.nyc.gov for additional information and technical support.

Notices to Bidders

NYC Construction Loan Pilot Program

The New York City Department of Small Business Services (SBS), in conjunction with the New York Business Development Corporation (NYBDC), have established **a NYC Construction Loan** pilot program to provide prime contractors and subcontractors financing for mobilization costs on certain City construction projects.

Under this initiative, loans are available for early stage mobilization needs such as insurance, labor, supplies and equipment. Bidders are strongly encouraged to visit "Growing Your Business" at www.nyc.gov/nycbusiness to learn more about the loan or contact constructionloan@sbs.nyc.gov / (212) 513-6444 to obtain details and to determine preliminary eligibility.

A successful loan applicant will be required to make an assignment of its contract (or subcontract) payments to the lender NYBDC until the loan is repaid. If the loan is to a subcontractor, a prime contractor must honor the terms of such an assignment.

A prime contractor may not discriminate against a subcontractor or potential subcontractor by reason of the subcontractor's participation, or nonparticipation, in the NYC Construction loan program.

(NO TEXT THIS PAGE)

CITY OF NEW YORK

DEPARTMENT OF DESIGN AND CONSTRUCTION DIVISION OF INFRASTRUCTURE

BID BOOKLET

FOR FURNISHING ALL LABOR AND MATERIALS NECESSARY AND REQUIRED FOR:

PROJECT ID: GCJA03-2B

CONSTRUCTION OF RIGHT-OF-WAY GREEN INFRASTRUCTURE IN THE CSO TRIBUTARY AREA JAM-003 AND JAM-003A

Together With All Work Incidental Thereto

BOROUGH OF QUEENS
CITY OF NEW YORK

NO TEXT ON THIS PAGE

PROJECT ID: GCJA03-2B

CITY OF NEW YORK
DEPARTMENT OF DESIGN AND CONSTRUCTION
DIVISION OF INFRASTRUCTURE

BID BOOKLET

TABLE OF CONTENTS

SECTION		PAGE
PART A		
1.	Table of Contents	1
2.	Special Notice to Bidders	2
3.	Attachment 1 – Bid Information	A-1
4.	Bid Schedule	B-1
5.	Bid Form	C-1
6.	Affirmation	C-6
7.	Bid Bond	C-7
8.	M/WBE Program: M/WBE Utilization Plan	5
9.	Apprenticeship Program Requirements	19
PART B		
10.	Safety Questionnaire	22
11.	Pre-award Process	25
12.	Project Reference Form	27
13.	Contract Certificate	30
14.	Vendex Compliance	31
15.	Iran Divestment Act Compliance Rider	32
16.	Construction Employment Report	34

(NO TEXT ON THIS PAGE)

CITY OF NEW YORK
DEPARTMENT OF DESIGN AND CONSTRUCTION
DIVISION OF INFRASTRUCTURE

SPECIAL NOTICE TO BIDDERS

BID SUBMISSION REQUIREMENTS

THE FOLLOWING DOCUMENTS ARE TO BE COMPLETED AND SUBMITTED WITH THE BID:

1. Bid Schedule and Bid Form, including Affirmation
2. Bid Security (if required, see Attachment 1 on Page A-1)
3. Schedule B: M/WBE Utilization Plan (if participation goals have been established)

FAILURE TO SUBMIT ITEMS (1), (2) AND (3) WILL RESULT IN THE DISQUALIFICATION OF THE BID.

4. Safety Questionnaire
5. Construction Employment Report (if bid is $1,000,000 or more)
6. Contract Certificate (if bid is less than $1,000,000)
7. Confirmation of Vendex Compliance
8. Bidder's Certification of Compliance with Iran Divestment Act
9. Special Experience Requirements (if applicable)
10. Apprenticeship Program Questionnaire (if applicable)
11. Any addenda issued prior to the receipt of bids

FAILURE TO SUBMIT ITEMS (4) THROUGH (11) MAY RESULT IN THE DISQUALIFICATION OF THE BID.

NOTES:

(1) All of the above referred to blank forms to be completed and submitted with the bid are included in the BID BOOKLET.

(2) If the bidder has any questions or requires additional information, please contact the Department of Design and Construction by phone (718-391- 2601).

(3) PASSPort Compliance: The Bidder is advised that Vendex Questionnaires and procedures have been replaced by the PASSPort system. Compliance with PASSPort is mandatory for contract Award. PASSPort details are set forth on NTB-2 at the beginning of this Bid Booklet.

(4) SPECIAL EXPERIENCE REQUIREMENTS: The Bidder is advised that Special Experience Requirements may apply to this contract. Such requirements are set forth on pages 3, 3a, 3b, and 4 of this Bid Booklet.

SPECIAL NOTICE TO BIDDERS

SPECIAL EXPERIENCE REQUIREMENTS (Revised 03/2014)

(A) **SPECIAL EXPERIENCE REQUIREMENTS FOR THE BIDDER:** The Special Experience Requirements set forth below apply to the bidder. Compliance with such Special Experience Requirements will be determined solely by the City prior to an award of contract. Failure to comply with the Special Experience Requirements will result in rejection of the bid as non-responsive.

The requirements in this Section (A) apply to this contract where indicated by a blackened box (■).

■ The bidder must, within the last seven (7) consecutive years prior to the bid opening, have successfully completed in a timely fashion at least one (1) project similar in scope and type to the required work. Such prior project may have been performed as a prime contractor, subcontractor or sub-subcontractor.

The Special Experience Requirements next to the blackened box below apply to the bidder. If the bidder intends to perform such work itself, it must demonstrate compliance with the Special Experience Requirements. If the bidder intends to subcontract this work, the proposed subcontractor or sub-subcontractor must demonstrate compliance with the Special Experience Requirements. The contractor, subcontractor or sub-subcontractor (hereinafter referred to as the "entity") that will perform any specific area of work indicated by the blackened box below, may have performed the required prior project(s) as a prime contractor, subcontractor or sub-subcontractor. Once approved, no substitution will be permitted, unless the qualifications of the proposed replacement have been approved in writing in advance by the City.

☐ **Trunk Water Main Work:** The entity that will perform the trunk water main work must, within the last seven (7) consecutive years prior to the bid opening, have successfully completed in a timely fashion at least one (1) project similar in scope and type to the required work.

☐ **Best Management Practice Work:** Best Management Practice ("BMP") Work is any item of work in the Bid Schedule that begins with the prefix "BMP". The entity that will perform any BMP Work must, within the last five (5) consecutive years prior to the bid opening, have successfully completed in a timely fashion at least three (3) projects similar in scope and type to the required work.

For professional services in connection with BMP Work, (i.e., monitoring and reporting services), the individual who will perform the required services must, within the last five (5) consecutive years prior to the bid opening, have successfully completed in a timely fashion at least three (3) projects similar in scope and type to the required work. Additional requirements are set forth below.

☐ The individual serving as the Restoration Specialist (Construction Monitor) must be a Registered Landscape Architect licensed by the state of New York, or must have equivalent professional experience.

☐ The individual serving as the Erosion and Sediment Control Licensed/Certified Professional must be a Certified Professional in Erosion and Sediment Control (CPESC), certified by CPESC, Inc.

☐ **Micro-Tunneling/Pipe Jacking Work:** The entity that will perform the micro-tunneling/pipe jacking work must, within the last five (5) consecutive years prior to the bid opening, have successfully completed in a timely fashion at least two (2) projects similar in scope and type to the required work.

☐ **OTHER:** _____

_____

(B) SPECIAL EXPERIENCE REQUIREMENTS FOR SPECIFIC AREAS OF WORK (to be provided after an award of contract):

The requirements in this Section (B) apply to this contract where indicated by a blackened box (■).

The Special Experience Requirements set forth below apply to the contractor, subcontractor or sub-subcontractor that will perform the specific area of work. **Compliance with such Special Experience Requirements will be determined solely by the City after an award of contract.** After an award of contract, when requested by the City, the contractor will be required to submit the qualifications of the contractor, subcontractor or sub-subcontractor that will perform the specific area of work. If the bidder intends to perform such work itself, it must demonstrate compliance with the Special Experience Requirements. If the bidder intends to subcontract this work, the proposed subcontractor or sub-subcontractor must demonstrate compliance with the Special Experience Requirements. Once approved, no substitution will be permitted, unless the qualifications of the proposed replacement have been approved in writing in advance by the City.

Special Experience Requirements apply to the contractor, subcontractor or sub-subcontractor (hereinafter referred to as the "entity") that will perform any specific area of work indicated by a blackened box. The entity may have performed the required prior project(s) as a prime contractor, subcontractor or sub-subcontractor.

☐ **Hazmat Work:** Hazmat Work is any item of work in the Bid Schedule that begins with the prefix 8.01. The entity that will perform any Hazmat Work must, within the last three (3) consecutive years prior to the bid opening, have successfully completed in a timely fashion at least five (5) projects similar in scope and type to the required work.

☐ **Pile, CFA Pile, and/or Mini-Pile Work:** The entity that will perform the Pile, CFA Pile and/or Mini-Pile Work must, within the last three (3) consecutive years prior to the bid opening, have successfully completed in a timely fashion at least two (2) projects similar in scope and type to the required work.

For professional services in connection with Pile Work, (i.e., engineering and inspection services), the individual who will perform the required services must be a Professional Engineer licensed by the state of New York. Such individual must also comply with the above requirements for prior projects.

☐ **Construction Report, Monitoring And Post-Construction Report, and Continuous Real-Time Monitoring For Vibrations And Movements And Post-Construction Report Work:** The entity that will perform the Construction Report, Monitoring For Vibrations And Movements, and Post-Construction Report Work must, within the last three (3) consecutive years prior to the bid opening, have successfully completed in a timely fashion at least two (2) projects similar in scope and type to the required work.

For professional services in connection with Reporting and Monitoring Work, (i.e., engineering and inspection services), the individual who will perform the required services must be a Professional Engineer licensed by the state of New York. Such individual must also comply with the above requirements for prior projects.

■ **OTHER:** Please see VOLUME 3 OF 3 Article "C", page S-1 of the SPECIAL PROVISIONS herein

(C) **SPECIFICATIONS:** In the event of any conflict, omission or inconsistency between (1) the Specifications and/or Contract Drawings, and (2) the Special Experience Requirements in Section (B) of the Special Notice To Bidders, the special experience listed in the Specifications and/or Contract Drawings MUST be controlling. The Special Experience Requirements in Section (B) of this Special Notice To Bidders are only for the convenience of the bidders.

(D) **SUBMISSION REQUIREMENTS:** For each project submitted to demonstrate compliance with the Special Experience Requirements, the bidder must complete and submit the Qualification Form included in the Bid Booklet. The City will only evaluate a project if the following criteria are met: (1) the project is described on the Qualification Form, and (2) all information on the Qualification Form is provided. The City will not evaluate any project which does not comply with the criteria set forth herein, including any project which is referred to only on the resume of an individual.

If Special Experience Requirements are indicated for any specific area of work, the submission requirement set forth above MUST apply to the entity that will perform the specific area of work.

(E) **CONDITIONS**: In determining compliance with the Special Experience Requirements for the bidder set forth above, the City may consider prior projects completed by principal(s) or other employees of the bidder while affiliated with another entity, subject to the conditions set forth below.

- Any principal or other employee on whose prior experience the bidder is relying to demonstrate compliance with this special experience requirement must have held the following: (a) a significant management role in the prior entity with which he/she was affiliated, and (b) a significant management role in the entity submitting the bid for a period of at least six (6) months, or from the inception of the bidding entity.

- The bidder may not rely on the experience of its principals or other employees to demonstrate compliance with any other requirements, including without limitation, financial requirements or requirements for a specified minimum amount of annual gross revenues.

(F) **JOINT VENTURES**: In the event the bidder is a joint venture, at least one firm in the joint venture must meet the above described experience requirements.

ATTACHMENT 1 - BID INFORMATION

PROJECT ID: GCJA03-2B
PIN: 8502019HW0004C

Description and Location of Work:

CONSTRUCTION OF RIGHT-OF-WAY GREEN INFRASTRUCTURE IN THE CSO TRIBUTARY AREAS JAM-003 AND JAM-003A

Together With All Work Incidental Thereto
BOROUGH OF QUEENS
CITY OF NEW YORK

Documents Available At: 30-30 Thomson Avenue
First Floor Bid Procurement Room
Long Island City, New York 11101
8:30 A.M. to 4:00 P.M. – Monday through Friday

Submission of Bids To: 30-30 Thomson Avenue
First Floor Bid Procurement Room
Long Island City, New York 11101
Before 11:00 A.M. on **APRIL 1, 2019**

Bid Opening: 30-30 Thomson Avenue
First Floor Bid Procurement Room
Long Island City, New York 11101
Time and Date: 11:00 A.M. on **APRIL 1, 2019**

Pre-Bid Conference: Yes _____ No X
If Yes, Mandatory _____ Optional: _____
Time and Date: _____
Location: _____

Bid Security: Bid Security is required in the amount set forth below; provided, however, bid security is not required if the TOTAL BID PRICE set forth on the Bid Form is less than $ 1,000,000.00.

(1) Bond in an amount not less than 10% of the TOTAL BID PRICE set forth on the Bid Form, OR

(2) Certified Check in an amount not less than 2% of the TOTAL BID PRICE set forth on the Bid Form.

Performance and Payment Security: Required for contracts in the amount of $1,000,000 or more. Performance Security and Payment Security shall each be in an amount equal to 50% of the Contract Price.

Agency Contact Person: Lorraine Holley
Phone: 718-391-2601 Email: CSB_projectinquiries@ddc.nyc.gov

For questions about site accessibility, please contact our disability services facilitator at (718) 391-2815 or via email at accessibility@ddc.nyc.gov.

(NO TEXT ON THIS PAGE)

Qualification Form

List previous projects completed to meet the special experience requirements for this contract. Please photocopy this form for submission of all required projects.

Name of Contractor: PCI Industries Corp.

Name of Project: Throgs Neck Retail Center

Location of Project: 815 Hutchinson River Parkway, Bronx, NY 10465

Owner or Owner's representative (Architect or (Engineer) who is familiar with the work performed:

Name: Brad Kempf of Philip Habib & Associates
Title: Engineer Phone Number: 212.929.5656

Brief description of the Project completed or the Project in progress: Retail Commercial site development including detention system / infiltration basin and hydrodynamic separators

Was the Project performed as a prime, a subcontractor or a sub-subcontractor: Subcontractor

Amount of Contract, Subcontract or Sub-subcontract: $ 3,770,000

Start Date and Completion Date: start: 12/31/12 completion 12/31/14

****

Name of Contractor: PCI Industries Corp.

Name of Project: New Rochelle High School Improvements GC-01

Location of Project: New Rochelle High School 285 Clove Road, New Rochelle NY 10801

Owner or Owner's representative (Architect or Engineer) who is familiar with the work performed:

Name: Jacobs Global Buildings – James Levato
Title: Project Manager Phone Number: 203.559.9377

Brief description of the Project completed or the Project in progress: Site drainage including Culter Infiltration System and Filterra Water Treatment Structures

Was the Project performed as a prime, a subcontractor or a sub-subcontractor: Prime Contractor

Amount of Contract, Subcontract or Sub-subcontract: $ 7,495,000

Start Date and Completion Date: start: 7/1/17 completion: 3/31/19

Qualification Form

List previous projects completed to meet the special experience requirements for this contract. Please photocopy this form for submission of all required projects.

Name of Contractor: PCI Industries Corp.

Name of Project: Dumbo Heights

Location of Project: 73 Sands Street, Brooklyn, NY

Owner or Owner's representative (Architect or Engineer) who is familiar with the work performed:

Name: Thomas Clarke of JRM Construction Management
Title: Project Manager Phone Number: 212.545.0500

Brief description of the Project completed or the Project in progress: BPP & Drainage Work including NYCDEP Bioswale & porous sidewalk with retention area

Was the Project performed as a prime, a subcontractor or a sub-subcontractor: Subcontractor

Amount of Contract, Subcontract or Sub-subcontract: $3,000,000

Start Date and Completion Date: start: June 2015 completion: May 2017

****

Name of Contractor: PCI Industries Corp.

Name of Project: Boyce Thompson

Location of Project: 1086 North Broadway, Yonkers, NY

Owner or Owner's representative (Architect or Engineer) who is familiar with the work performed:

Name: Chip Marrano - MCG Construction
Title: Project Executive Phone Number: 917.299.6912

Brief description of the Project completed or the Project in progress: Site development including NYSDEC specified sand filters

Was the Project performed as a prime, a subcontractor or a sub-subcontractor: Subcontractor

Amount of Contract, Subcontract or Sub-subcontract: $3,433,000

Start Date and Completion Date: start: 8/1/15 completion: 4/30/17

LIST OF CONTRACT DRAWINGS
PACKAGE 1 OF 2

PAGE	SHEET	TITLE
1	I-1	COVER PAGE
2	I-2	INDEX
3	I-3	LEGEND
4	I-4	GENERAL NOTES (1 OF 2)
5	I-5	GENERAL NOTES (2 OF 2)
6	GI-1	OVERALL KEY PLAN
7	GI-2	KEY PLAN (1 OF 2)
8	GI-3	KEY PLAN (2 OF 2)
9	GI-4	ROWB 478A 478B 478C - EXISTING AND PROPOSED PLANS
10	GI-5	ROWB 482A 482C & ROWIB 482B - EXISTING AND PROPOSED PLANS
11	GI-6	ROWB 486A 486D & ROWIB 486C - EXISTING AND PROPOSED PLANS
12	GI-7	ROWB 490A 490B - EXISTING AND PROPOSED PLANS
13	GI-8	ROWB 494A 494B 494C - EXISTING AND PROPOSED PLANS
14	GI-9	ROWB 503A 503C - EXISTING AND PROPOSED PLANS
15	GI-10	ROWIB 504E & ROWB 504F 504G - EXISTING AND PROPOSED PLANS
16	GI-11	ROWB 504A 504C - EXISTING AND PROPOSED PLANS
17	GI-12	ROWB 508A & ROWIB 573B 573A - EXISTING AND PROPOSED PLANS
18	GI-13	ROWB 511G & ROWIB 509AA 509AB - EXISTING AND PROPOSED PLANS
19	GI-14	ROWB 512A 512C - EXISTING AND PROPOSED PLANS
20	GI-15	ROWGS 569A & 571A - EXISTING AND PROPOSED PLANS
21	GI-16	ROWB 567B & ROWGS 567D - EXISTING AND PROPOSED PLANS
22	GI-17	ROWIB 574A ROWGS 574D & ROWB 575A - EXISTING AND PROPOSED PLANS
23	GI-18	ROWB 574E 576C - EXISTING AND PROPOSED PLANS
24	GI-19	ROWGS 578A 578B & ROWB 579A - EXISTING AND PROPOSED PLANS
25	GI-20	ROWB 588B - EXISTING AND PROPOSED PLANS
26	GI-21	ROWB 583A 583B 583C - EXISTING AND PROPOSED PLANS
27	GI-22	ROWGS 587A 587B & ROWIB 659A - EXISTING AND PROPOSED PLANS
28	GI-23	ROWGS 590A ROWB 592A & ROWIB 594C - EXISTING AND PROPOSED PLANS
29	GI-24	ROWB 595A & ROWIB 595B - EXISTING AND PROPOSED PLANS
30	GI-25	ROWB 598A 599A 599-1A - EXISTING AND PROPOSED PLANS
31	GI-26	ROWIB 646A & ROWB 646B 648A - EXISTING AND PROPOSED PLANS
32	GI-27	ROWGS 650A - EXISTING AND PROPOSED PLANS
33	GI-28	ROWB 650E - EXISTING AND PROPOSED PLANS
34	GI-29	ROWB 653A & ROWIB 670A - EXISTING AND PROPOSED PLANS
35	GI-30	ROWGS 663E - EXISTING AND PROPOSED PLANS
36	GI-31	ROWGS 663A & ROWB 663D - EXISTING AND PROPOSED PLANS
37	GI-32	ROWGS 665A - EXISTING AND PROPOSED PLANS
38	GI-33	ROWB 666B 666C 667B - EXISTING AND PROPOSED PLANS
39	GI-34	ROWGS 667A 666A & ROWB 668B - EXISTING AND PROPOSED PLANS
40	GI-35	ROWGS 669A 669B - EXISTING AND PROPOSED PLANS
41	GI-36	ROWB 673A 673B 673D - EXISTING AND PROPOSED PLANS

PAGE	SHEET	TITLE
42	GI-37	ROWB 676-1A 676-1B - EXISTING AND PROPOSED PLANS
43	GI-38	ROWB 725A 726A - EXISTING AND PROPOSED PLANS
44	GI-39	ROWB 728A 728B 751A - EXISTING AND PROPOSED PLANS
45	GI-40	ROWB 731A 732A 732C - EXISTING AND PROPOSED PLANS
46	GI-41	ROWB 733C - EXISTING AND PROPOSED PLANS
47	GI-42	ROWB 734C - EXISTING AND PROPOSED PLANS
48	GI-43	ROWB 735D - EXISTING AND PROPOSED PLANS
49	GI-44	ROWB 740A 740D 745A - EXISTING AND PROPOSED PLANS
50	GI-45	ROWGS 816A - EXISTING AND PROPOSED PLANS
51	GI-46	ROWB 746E 746F 746I - EXISTING AND PROPOSED PLANS
52	GI-47	ROWB 746B 746D - EXISTING AND PROPOSED PLANS
53	GI-48	ROWB 747G 747H 747J - EXISTING AND PROPOSED PLANS
54	GI-49	ROWB 747A 747F & ROWIB 747B - EXISTING AND PROPOSED PLANS
55	GI-50	ROWGS 750A & ROWB 811A - EXISTING AND PROPOSED PLANS
56	GI-51	ROWIB 750AA 750AB - EXISTING AND PROPOSED PLANS
57	GI-52	ROWB 801A & ROWGS 805A - EXISTING AND PROPOSED PLANS
58	GI-53	ROWB 812A - EXISTING AND PROPOSED PLANS
59	GI-54	ROWB 815C - EXISTING AND PROPOSED PLANS
60	GI-55	ROWB 823D 823E & ROWGS 825A - EXISTING AND PROPOSED PLANS
61	GI-56	ROWB 821A 822A - EXISTING AND PROPOSED PLANS
62	GI-57	ROWGS 823A 823B 823C - EXISTING AND PROPOSED PLANS
63	GI-58	ROWIB 827B - EXISTING AND PROPOSED PLANS
64	GI-59	ROWB 876C & ROWIB 876E 876F - EXISTING AND PROPOSED PLANS
65	GI-60	ROWB 830A 830C 834C - EXISTING AND PROPOSED PLANS
66	GI-61	ROWIB 831AA 831AB - EXISTING AND PROPOSED PLANS
67	GI-62	ROWB 878A & ROWIB 878B 878C - EXISTING AND PROPOSED PLANS
68	GI-63	ROWB 879A 879B - EXISTING AND PROPOSED PLANS
69	GI-64	ROWGS 880A 880B & ROWIB 881B - EXISTING AND PROPOSED PLANS
70	GI-65	ROWB 881C 884B - EXISTING AND PROPOSED PLANS
71	GI-66	ROWB 889-1A 961B - EXISTING AND PROPOSED PLANS
72	GI-67	ROWB 888A - EXISTING AND PROPOSED PLANS
73	GI-68	ROWB 889B - EXISTING AND PROPOSED PLANS
74	GI-69	ROWB 893A - EXISTING AND PROPOSED PLANS
75	GI-70	ROWB 897A 897B 954A - EXISTING AND PROPOSED PLANS
76	GI-71	ROWB 896B - EXISTING AND PROPOSED PLANS
77	GI-72	ROWB 900D 900E 900F - EXISTING AND PROPOSED PLANS
78	GI-73	ROWGS 899C 900D - EXISTING AND PROPOSED PLANS
79	GI-74	ROWB 900A 900B - EXISTING AND PROPOSED PLANS
80	GI-75	ROWGS 902A & ROWB 904A - EXISTING AND PROPOSED PLANS
81	GI-76	ROWIB 942AB - EXISTING AND PROPOSED PLANS
82	GI-77	ROWGS 943A 943B - EXISTING AND PROPOSED PLANS
83	GI-78	ROWB 950A 950B - EXISTING AND PROPOSED PLANS
84	GI-79	ROWB 951B 952A 952B - EXISTING AND PROPOSED PLANS
85	GI-80	ROWB 953A 953C 957A - EXISTING AND PROPOSED PLANS

PAGE	SHEET	TITLE
86	GI-81	ROWB 956A 956D 956E - EXISTING AND PROPOSED PLANS
87	GI-82	ROWB 957D 957F - EXISTING AND PROPOSED PLANS
88	GI-83	ROWB 964A 964C - EXISTING AND PROPOSED PLANS
89	GI-84	ROWB 967A 968A 969A - EXISTING AND PROPOSED PLANS
90	GI-85	ROWB 972A 1081A 1081B - EXISTING AND PROPOSED PLANS
91	GI-86	ROWB 971C - EXISTING AND PROPOSED PLANS
92	GI-87	ROWIB 975D & ROWB 975E 975H - EXISTING AND PROPOSED PLANS
93	GI-88	ROWB 975A 976A 976B - EXISTING AND PROPOSED PLANS
94	GI-89	ROWB 980A 1075A 1075C - EXISTING AND PROPOSED PLANS
95	GI-90	ROWB 983A 983B 984A - EXISTING AND PROPOSED PLANS
96	GI-91	ROWB 1066A - EXISTING AND PROPOSED PLANS
97	GI-92	ROWIB 988A & ROWB 988-1B - EXISTING AND PROPOSED PLANS
98	GI-93	ROWB 1057A & ROWIB 1064AA 1064AB - EXISTING AND PROPOSED PLANS
99	GI-94	ROWB 1065A 1069A 1101A - EXISTING AND PROPOSED PLANS
100	GI-95	ROWB 1068C & ROWIB 1068AA 1068AB - EXISTING AND PROPOSED PLANS
101	GI-96	ROWIB 1069-1AA - EXISTING AND PROPOSED PLANS
102	GI-97	ROWIB 871-1AB - EXISTING AND PROPOSED PLANS
103	GI-98	ROWB 1076A 1076B - EXISTING AND PROPOSED PLANS
104	GI-99	ROWB 1078A 1091A 1093A - EXISTING AND PROPOSED PLANS
105	GI-100	ROWGS 1080A 1080B - EXISTING AND PROPOSED PLANS
106	GI-101	ROWB 1095A 1095B & ROWGS 1095C - EXISTING AND PROPOSED PLANS
107	GI-102	ROWB 1099A - EXISTING AND PROPOSED PLANS
108	GI-103	SGS 946A - EXISTING SITE PLAN
109	GI-104	SGS 946A - PROPOSED SITE PLAN
110	GI-105	SGS 946A - GRADING & DETAILED LAYOUT PLAN
111	GI-106	SGS 946A - PLANTING PLAN
112	GI-107	SGS 1-BAY BIOFILTER INLET DETAILS
113	GI-108	SGS 2-BAY BIOFILTER INLET DETAILS
114	GI-109	SGS 3-BAY BIOFILTER INLET DETAILS
115	GI-110	SGS GENERAL DETAILS
116	B-1	GEOTECHNICAL INVESTIGATION KEY MAP
117	B-2	GEOTECHNICAL INVESTIGATION MAP (1 OF 11)
118	B-3	GEOTECHNICAL INVESTIGATION MAP (2 OF 11)
119	B-4	GEOTECHNICAL INVESTIGATION MAP (3 OF 11)
120	B-5	GEOTECHNICAL INVESTIGATION MAP (4 OF 11)
121	B-6	GEOTECHNICAL INVESTIGATION MAP (5 OF 11)
122	B-7	GEOTECHNICAL INVESTIGATION MAP (6 OF 11)
123	B-8	GEOTECHNICAL INVESTIGATION MAP (7 OF 11)
124	B-9	GEOTECHNICAL INVESTIGATION MAP (8 OF 11)
125	B-10	GEOTECHNICAL INVESTIGATION MAP (9 OF 11)
126	B-11	GEOTECHNICAL INVESTIGATION MAP (10 OF 11)
127	B-12	GEOTECHNICAL INVESTIGATION MAP (11 OF 11)
128	B-13	BORING LOGS AND PERMEABILITY RESULTS (1 OF 30)
129	B-14	BORING LOGS AND PERMEABILITY RESULTS (2 OF 30)

PAGE	SHEET	TITLE
130	B-15	BORING LOGS AND PERMEABILITY RESULTS (3 OF 30)
131	B-16	BORING LOGS AND PERMEABILITY RESULTS (4 OF 30)
132	B-17	BORING LOGS AND PERMEABILITY RESULTS (5 OF 30)
133	B-18	BORING LOGS AND PERMEABILITY RESULTS (6 OF 30)
134	B-19	BORING LOGS AND PERMEABILITY RESULTS (7 OF 30)
135	B-20	BORING LOGS AND PERMEABILITY RESULTS (8 OF 30)
136	B-21	BORING LOGS AND PERMEABILITY RESULTS (9 OF 30)
137	B-22	BORING LOGS AND PERMEABILITY RESULTS (10 OF 30)
138	B-23	BORING LOGS AND PERMEABILITY RESULTS (11 OF 30)
139	B-24	BORING LOGS AND PERMEABILITY RESULTS (12 OF 30)
140	B-25	BORING LOGS AND PERMEABILITY RESULTS (13 OF 30)
141	B-26	BORING LOGS AND PERMEABILITY RESULTS (14 OF 30)
142	B-27	BORING LOGS AND PERMEABILITY RESULTS (15 OF 30)
143	B-28	BORING LOGS AND PERMEABILITY RESULTS (16 OF 30)
144	B-29	BORING LOGS AND PERMEABILITY RESULTS (17 OF 30)
145	B-30	BORING LOGS AND PERMEABILITY RESULTS (18 OF 30)
146	B-31	BORING LOGS AND PERMEABILITY RESULTS (19 OF 30)
147	B-32	BORING LOGS AND PERMEABILITY RESULTS (20 OF 30)
148	B-33	BORING LOGS AND PERMEABILITY RESULTS (21 OF 30)
149	B-34	BORING LOGS AND PERMEABILITY RESULTS (22 OF 30)
150	B-35	BORING LOGS AND PERMEABILITY RESULTS (23 OF 30)
151	B-36	BORING LOGS AND PERMEABILITY RESULTS (24 OF 30)
152	B-37	BORING LOGS AND PERMEABILITY RESULTS (25 OF 30)
153	B-38	BORING LOGS AND PERMEABILITY RESULTS (26 OF 30)
154	B-39	BORING LOGS AND PERMEABILITY RESULTS (27 OF 30)
155	B-40	BORING LOGS AND PERMEABILITY RESULTS (28 OF 30)
156	B-41	BORING LOGS AND PERMEABILITY RESULTS (29 OF 30)
157	B-42	BORING LOGS AND PERMEABILITY RESULTS (30 OF 30)
158	S-1	482A 482B 486A 486C 486D 490A - EXISTING CONDITIONS SURVEY
159	S-2	490B 494A 494B 494C 503A 503C 504A - EXISTING CONDITIONS SURVEY
160	S-3	504C 504E 504F 504G 505B 508A 511B - EXISTING CONDITIONS SURVEY
161	S-4	511D 511E 511G 573A 573B 574A 574D - EXISTING CONDITIONS SURVEY
162	S-5	574E 575A 576A 579A 580A 583A 583B - EXISTING CONDITIONS SURVEY
163	S-6	583C 592A 594C 648A 650A 650B 650G 650I - EXISTING CONDITIONS SURVEY
164	S-7	650K 650L 653A 662A 662C 663A 663D - EXISTING CONDITIONS SURVEY
165	S-8	664A 664B 666B 667B 668A 668B - EXISTING CONDITIONS SURVEY
166	S-9	669A 669B 670A 673A 673B 673D 676-1A 676-1B 725A - EXISTING CONDITIONS SURVEY
167	S-10	726A 728A 728B 731A 732A 732C 733C - EXISTING CONDITIONS SURVEY
168	S-11	734A 734C 735A 735C 735D 736A - EXISTING CONDITIONS SURVEY
169	S-12	737A 737B 740A 740D 741A 745A 746B - EXISTING CONDITIONS SURVEY
170	S-13	746D 746E 746F 746I 747A 747B 747F - EXISTING CONDITIONS SURVEY
171	S-14	747G 747H 747J 747M 812A 815A - EXISTING CONDITIONS SURVEY
172	S-15	815B 815C 815D 815E 816A 816B 821A - EXISTING CONDITIONS SURVEY
173	S-16	822A 822C 823A 823B 823C 823D - EXISTING CONDITIONS SURVEY

PAGE	SHEET	TITLE
174	S-17	826A 826B 827A 827B 828A 828B 834C - EXISTING CONDITIONS SURVEY
175	S-18	876A 876-1A 878A 878B 878C 879A 879B - EXISTING CONDITIONS SURVEY
176	S-19	879C 880B 881B 881C 884A 884B 888A 888B - EXISTING CONDITIONS SURVEY
177	S-20	889A 889B 889-1A 892A 893A 896B 897A 897B - EXISTING CONDITIONS SURVEY
178	S-21	897C 900A 900B 900F 902A 943A 943B 950A 950B - EXISTING CONDITIONS SURVEY
179	S-22	951B 952A 952B 953A 953C 954A 956A 956D - EXISTING CONDITIONS SURVEY
180	S-23	956G 957A 957D 957F 964A 964C - EXISTING CONDITIONS SURVEY
181	S-24	967A 968A 969A 971E 971F 972A 975A - EXISTING CONDITIONS SURVEY
182	S-25	975H 976A 976B 983A 983B 984A 987A 987B 988A - EXISTING CONDITIONS SURVEY
183	S-26	988-1B 1065A 1066A 1068-1A 1068-1B 1068C 1069A - EXISTING CONDITIONS SURVEY
184	S-27	1072B 1076A 1076B 1076C 1078A 1079A 1079B - EXISTING CONDITIONS SURVEY
185	S-28	1079C 1080A 1080B 1081A 1081B 1085B 1093A 1095A - EXISTING CONDITIONS SURVEY
186	S-29	1095B 1099A 1099C 1099D 1099F 1101A - EXISTING CONDITIONS SURVEY
187	S-30	GS 578A GS 578B GS 587A GS 587B GS 590A GS 650A GS - EXISTING CONDITIONS SURVEY
188	S-31	GS 653B GS 659A GS 663E GS 665A GS 666A GS 667A - EXISTING CONDITIONS SURVEY
189	S-32	GS 805A GS 825A GS 830A GS 899C GS 1095C - EXISTING CONDITIONS SURVEY
190	S-33	SGS 509A SGS 582A SGS 652A - EXISTING CONDITIONS SURVEY
191	S-34	SGS 1068A SGS 1069-1A - EXISTING CONDITIONS SURVEY
192	S-35	98B GS155B 211B 280B 361B 394E - EXISTING CONDITIONS SURVEY
193	S-36	464B - EXISTING CONDITIONS SURVEY
194	S-37	478A 478B 478C 482C 511A 512A - EXISTING CONDITIONS SURVEY
195	S-38	512C 517A 567B 567C 567D 569A - EXISTING CONDITIONS SURVEY
196	S-39	GS571A 567C GS588A 588B 595A - EXISTING CONDITIONS SURVEY
197	S-40	595B 598A 599A 599B GS646A 646B - EXISTING CONDITIONS SURVEY
198	S-41	650E 666C 677-1A 733A GS750A 751A - EXISTING CONDITIONS SURVEY
199	S-42	801A 811A 823E 830C - EXISTING CONDITIONS SURVEY
200	S-43	876C 876E 876F 880A GS899D 900D - EXISTING CONDITIONS SURVEY
201	S-44	900E 904A 956E 961B 971C - EXISTING CONDITIONS SURVEY
202	S-45	975D 975E 978A 980A 985A 1057A - EXISTING CONDITIONS SURVEY
203	S-46	1075A 1075C 1091A SGS513A - EXISTING CONDITIONS SURVEY
204	S-47	SGS750A SGS754A - EXISTING CONDITIONS SURVEY
205	S-48	SGS931A SGS871-1A SGS875 - EXISTING CONDITIONS SURVEY
206	S-49	SGS942A SGS946A SGS964-1A - EXISTING CONDITIONS SURVEY
207	S-50	SGS1064A SGS1086A - EXISTING CONDITIONS SURVEY

LIST OF CONTRACT DRAWINGS
PACKAGE 2 OF 2

PAGE	SHEET	TITLE
1	I-1	Cover Page
2	I-2	Index
3	I-3	Legend
4	I-4	General Notes
5	I-5	General Notes (2)
6	I-6	General Notes (3)
7	GI-1	Overall Key Plan
8	GI-2	Key Plan (1 OF 3)
9	GI-3	Key Plan (2 OF 3)
10	GI-4	Key Plan (3 OF 3)
11	GI-5	ROWB 470A 536A - EXISTING AND PROPOSED PLANS
12	GI-6	ROWB 535A 538A 540B - EXISTING AND PROPOSED PLANS
13	GI-7	ROWB 539A 539C 541B - EXISTING AND PROPOSED PLANS
14	GI-8	ROWB 535B 548A 548B - EXISTING AND PROPOSED PLANS
15	GI-9	ROWB 533A 533B ROWIB IB530A - EXISTING AND PROPOSED PLANS
16	GI-10	ROWGS GS529A GS529E - EXISTING AND PROPOSED PLANS
17	GI-11	ROWB 525B & ROWGS GS606A - EXISTING AND PROPOSED PLANS
18	GI-12	ROWGS GS601B GS641A - EXISTING AND PROPOSED PLANS
19	GI-13	ROWB 618A 621A - EXISTING AND PROPOSED PLANS
20	GI-14	ROWB 623A 623C 625A - EXISTING AND PROPOSED PLANS
21	GI-15	ROWB 628A - EXISTING AND PROPOSED PLANS
22	GI-16	ROWGS GS635A GS635D GS635E - EXISTING AND PROPOSED PLANS
23	GI-17	ROWB 688A & ROWGS GS689A & ROWIB IB711A - EXISTING AND PROPOSED PLANS
24	GI-18	ROWGS GS693A GS693C - EXISTING AND PROPOSED PLANS
25	GI-19	ROWB 698A 698D 698E - EXISTING AND PROPOSED PLANS
26	GI-20	ROWB 701A 702C 703A - EXISTING AND PROPOSED PLANS
27	GI-21	ROWB 704B & ROWIB IB705A - EXISTING AND PROPOSED PLANS
28	GI-22	ROWB 707A 707D 707E - EXISTING AND PROPOSED PLANS
29	GI-23	ROWB 715A 718A - EXISTING AND PROPOSED PLANS
30	GI-24	ROWIB IB719B IB719A IB720A - EXISTING AND PROPOSED PLANS
31	GI-25	ROWB 759A 761A 762A - EXISTING AND PROPOSED PLANS
32	GI-26	ROWB 764A 764B 765B - EXISTING AND PROPOSED PLANS
33	GI-27	ROWB 765A 767A - EXISTING AND PROPOSED PLANS
34	GI-28	ROWB 768A 768B 768D - EXISTING AND PROPOSED PLANS
35	GI-29	ROWB 769F 770G - EXISTING AND PROPOSED PLANS
36	GI-30	ROWB 769A 769B 769C - EXISTING AND PROPOSED PLANS
37	GI-31	ROWIB 770A & ROWB 770C - EXISTING AND PROPOSED PLANS
38	GI-32	ROWB 772A - EXISTING AND PROPOSED PLANS
39	GI-33	ROWIB IB773C ROWB 773F 773H - EXISTING AND PROPOSED PLANS
40	GI-34	ROWB 774B - EXISTING AND PROPOSED PLANS
41	GI-35	ROWB 778A 779A 781A - EXISTING AND PROPOSED PLANS
42	GI-36	ROWB 780A 780B 780C - EXISTING AND PROPOSED PLANS

PAGE	SHEET	TITLE
43	GI-37	ROWB 782A 788D - EXISTING AND PROPOSED PLANS
44	GI-38	ROWB 789A 789C 790A - EXISTING AND PROPOSED PLANS
45	GI-39	ROWB 792A 840A 840C - EXISTING AND PROPOSED PLANS
46	GI-40	ROWB 841A 841B - EXISTING AND PROPOSED PLANS
47	GI-41	ROWB 839A 843D - EXISTING AND PROPOSED PLANS
48	GI-42	ROWB 845A 845B 845D - EXISTING AND PROPOSED PLANS
49	GI-43	ROWB 846A 857A - EXISTING AND PROPOSED PLANS
50	GI-44	ROWB 849A 849B 850A - EXISTING AND PROPOSED PLANS
51	GI-45	ROWB 852A - EXISTING AND PROPOSED PLANS
52	GI-46	ROWB 856C 856B 856A - EXISTING AND PROPOSED PLANS
53	GI-47	ROWB 860G 860F 862A - EXISTING AND PROPOSED PLANS
54	GI-48	ROWB 863B 864A 864B - EXISTING AND PROPOSED PLANS
55	GI-49	ROWB 908B 909A - EXISTING AND PROPOSED PLANS
56	GI-50	ROWGS GS916A GS916B - EXISTING AND PROPOSED PLANS
57	GI-51	ROWB 917A - EXISTING AND PROPOSED PLANS
58	GI-52	ROWGS GS925A & ROWB 927A - EXISTING AND PROPOSED PLANS
59	GI-53	ROWB 992B 992D - EXISTING AND PROPOSED PLANS
60	GI-54	ROWB 1003B - EXISTING AND PROPOSED PLANS
61	GI-55	ROWB 1008A & ROWGS GS1014A GS1014B - EXISTING AND PROPOSED PLANS
62	GI-56	ROWGS GS1014C GS1017A GS1017B - EXISTING AND PROPOSED PLANS
63	GI-57	ROWB 1027A 1027B - EXISTING AND PROPOSED PLANS
64	GI-58	ROWB 1026A 1040A 1040B - EXISTING AND PROPOSED PLANS
65	GI-59	ROWB 1034A ROWGS GS1036A - EXISTING AND PROPOSED PLANS
66	GI-60	ROWB 1050A 1050B & ROWGS GS1050C - EXISTING AND PROPOSED PLANS
67	GI-61	ROWGS GS1049B - EXISTING AND PROPOSED PLANS
68	GI-62	ROWB 1052B 1053A 1053B - EXISTING AND PROPOSED PLANS
69	GI-63	ROWB 1054A 1054C - EXISTING AND PROPOSED PLANS
70	GI-64	ROWB 1084A 1088A 1088B - EXISTING AND PROPOSED PLANS
71	GI-65	ROWB 1139A 1139B - EXISTING AND PROPOSED PLANS
72	GI-66	ROWB 1096A 1100C - EXISTING AND PROPOSED PLANS
73	GI-67	ROWB 1100A 1100B 1132-1A - EXISTING AND PROPOSED PLANS
74	GI-68	ROWB 1104C 1132-1C 1132-1E - EXISTING AND PROPOSED PLANS
75	GI-69	ROWB 1109A 1112A - EXISTING AND PROPOSED PLANS
76	GI-70	ROWGS GS1113-1A ROWIB IB1115A & ROWB 1115-1A - EXISTING AND PROPOSED PLANS
77	GI-71	ROWB 1123C 1124A - EXISTING AND PROPOSED PLANS
78	GI-72	ROWB 1124B - EXISTING AND PROPOSED PLANS
79	GI-73	ROWIB IB1104A - EXISTING AND PROPOSED PLANS
80	GI-74	ROWB 1129A 1164B - EXISTING AND PROPOSED PLANS
81	GI-75	ROWB 1133A 1133B - EXISTING AND PROPOSED PLANS
82	GI-76	ROWB 1133D 1133E - EXISTING AND PROPOSED PLANS
83	GI-77	ROWB 1137B 1138A 1138D - EXISTING AND PROPOSED PLANS
84	GI-78	ROWGS GS1149D GS1149C GS1149A - EXISTING AND PROPOSED PLANS
85	GI-79	ROWB 1152A 1155A 1153A - EXISTING AND PROPOSED PLANS
86	GI-80	ROWB 1157-1A 1157-1B 1158-1A - EXISTING AND PROPOSED PLANS

PAGE	SHEET	TITLE
87	GI-81	ROWB 1158B 1158C - EXISTING AND PROPOSED PLANS
88	GI-82	ROWGS GS1162H GS1161A - EXISTING AND PROPOSED PLANS
89	GI-83	ROWGS GS1162E GS1162G - EXISTING AND PROPOSED PLANS
90	GI-84	ROWB 1162A 1164A & ROWIB IB1162C - EXISTING AND PROPOSED PLANS
91	GI-85	ROWB 1165A 1165-1D 1165-1F - EXISTING AND PROPOSED PLANS
92	GI-86	ROWB 1166-1A 1166-1D 1166-1E - EXISTING AND PROPOSED PLANS
93	GI-87	ROWB 1125A 1125B 1169A - EXISTING AND PROPOSED PLANS
94	GI-88	ROWIB IB1171A ROWB 1171C 1171D - EXISTING AND PROPOSED PLANS
95	GI-89	ROWB 1171-1A 1177A - EXISTING AND PROPOSED PLANS
96	GI-90	ROWGS GS1228A - EXISTING AND PROPOSED PLANS
97	GI-91	ROWB 1196A 1196B 1197A - EXISTING AND PROPOSED PLANS
98	GI-92	ROWIB IB1198A & ROWB 1157A - EXISTING AND PROPOSED PLANS
99	GI-93	ROWB 1204A & ROWGS GS1206C GS1206E - EXISTING AND PROPOSED PLANS
100	GI-94	ROWGS GS1206A GS1206B & ROWB 1209A - EXISTING AND PROPOSED PLANS
101	GI-95	ROWB 1207C 1207D - EXISTING AND PROPOSED PLANS
102	GI-96	ROWB 1252B 1253D - EXISTING AND PROPOSED PLANS
103	GI-97	ROWIB IB1298A & ROWB 1298B & ROWIB IB1298C - EXISTING AND PROPOSED PLANS
104	GI-98	ROWB 1255A 1258A & ROWGS GS1288A - EXISTING AND PROPOSED PLANS
105	GI-99	ROWGS GS1261B GS1261C GS1262A - EXISTING AND PROPOSED PLANS
106	GI-100	ROWB 1261D 1263B 1266A - EXISTING AND PROPOSED PLANS
107	GI-101	ROWB 1264A 1285-2A - EXISTING AND PROPOSED PLANS
108	GI-102	ROWB 1269A & ROWGS GS1270B GS1270AA - EXISTING AND PROPOSED PLANS
109	GI-103	ROWGS GS1271-1A GS1276C - EXISTING AND PROPOSED PLANS
110	GI-104	ROWGS GS1276A & ROWB 1278A 1278B - EXISTING AND PROPOSED PLANS
111	GI-105	ROWB 1277B - EXISTING AND PROPOSED PLANS
112	GI-106	ROWB 1278C 1285-1B - EXISTING AND PROPOSED PLANS
113	GI-107	ROWB 1285A 1286A 1286C - EXISTING AND PROPOSED PLANS
114	GI-108	ROWB 1141A 1142B & ROWGS GS1142C - EXISTING AND PROPOSED PLANS
115	GI-109	ROWB 1253A 1294A 1294B - EXISTING AND PROPOSED PLANS
116	GI-110	ROWB 1295A 1296A 1296B - EXISTING AND PROPOSED PLANS
117	GI-111	ROWIB IB523AA IB523AB - EXISTING AND PROPOSED PLANS
118	GI-112	ROWIB IB527AA IB527AB IB558AA - EXISTING AND PROPOSED PLANS
119	GI-113	ROWIB IB544AA IB544AB - EXISTING AND PROPOSED PLANS
120	GI-114	ROWIB IB551AA IB551AB - EXISTING AND PROPOSED PLANS
121	GI-115	ROWIB IB610AA IB610AB - EXISTING AND PROPOSED PLANS
122	GI-116	PAGE INTENTIONALLY LEFT BLANK - EXISTING AND PROPOSED PLANS
123	GI-117	ROWIB IB630AB IB630AC - EXISTING AND PROPOSED PLANS
124	GI-118	ROWIB IB692AA IB692AB IB692AC - EXISTING AND PROPOSED PLANS
125	GI-119	ROWIB IB708AA IB708AB IB708AC - EXISTING AND PROPOSED PLANS
126	GI-120	ROWIB IB714AA IB714AB - EXISTING AND PROPOSED PLANS
127	GI-121	ROWIB IB1004AA IB1004AB - EXISTING AND PROPOSED PLANS
128	GI-123	ROWIB IB1016AA IB1016AB - EXISTING AND PROPOSED PLANS
129	GI-124	ROWIB IB1019AB - EXISTING AND PROPOSED PLANS
130	GI-125	ROWIB IB1025AA IB1025AB - EXISTING AND PROPOSED PLANS

PAGE	SHEET	TITLE
131	GI-126	ROWIB IB1129AA IB1129AB - EXISTING AND PROPOSED PLANS
132	GI-127	ROWIB IB1141AA IB1141AB IB1141AC - EXISTING AND PROPOSED PLANS
133	GI-128	ROWIB IB1144AA IB1144AB - EXISTING AND PROPOSED PLANS
134	GI-129	ROWIB IB1154AA IB1154AB IB1154AC - EXISTING AND PROPOSED PLANS
135	GI-130	ROWIB IB1158AA - EXISTING AND PROPOSED PLANS
136	GI-131	ROWIB IB1161AA IB1161AB - EXISTING AND PROPOSED PLANS
137	GI-132	SGS 712A - Existing Site Plan
138	GI-133	SGS 712A - Proposed Site Plan
139	GI-134	SGS 712A - Grading & Detailed Layout Plan
140	GI-135	SGS 712A - Planting Plan
141	GI-136	SGS 2-BAY BIOFILTER INLET DETAILS
142	GI-137	SGS GENERAL DETAILS
143	B-1	GEOTECHNICAL INVESTIGATION - KEY MAP
144	B-2	GEOTECHNICAL INVESTIGATION - MAP (1 OF 15)
145	B-3	GEOTECHNICAL INVESTIGATION - MAP (2 OF 15)
146	B-4	GEOTECHNICAL INVESTIGATION - MAP (3 OF 15)
147	B-5	GEOTECHNICAL INVESTIGATION - MAP (4 OF 15)
148	B-6	GEOTECHNICAL INVESTIGATION - MAP (5 OF 15)
149	B-7	GEOTECHNICAL INVESTIGATION - MAP (6 OF 15)
150	B-8	GEOTECHNICAL INVESTIGATION - MAP (7 OF 15)
151	B-9	GEOTECHNICAL INVESTIGATION - MAP (8 OF 15)
152	B-10	GEOTECHNICAL INVESTIGATION - MAP (9 OF 15)
153	B-11	GEOTECHNICAL INVESTIGATION - MAP (10 OF 15)
154	B-12	GEOTECHNICAL INVESTIGATION - MAP (11 OF 15)
155	B-13	GEOTECHNICAL INVESTIGATION - MAP (12 OF 15)
156	B-14	GEOTECHNICAL INVESTIGATION - MAP (13 OF 15)
157	B-15	GEOTECHNICAL INVESTIGATION - MAP (14 OF 15)
158	B-16	GEOTECHNICAL INVESTIGATION - MAP (15 OF 15)
159	B-17	BORING LOGS AND PERMEABILITY RESULTS - (1 OF 43)
160	B-18	BORING LOGS AND PERMEABILITY RESULTS - (2 OF 43)
161	B-19	BORING LOGS AND PERMEABILITY RESULTS - (3 OF 43)
162	B-20	BORING LOGS AND PERMEABILITY RESULTS - (4 OF 43)
163	B-21	BORING LOGS AND PERMEABILITY RESULTS - (5 OF 43)
164	B-22	BORING LOGS AND PERMEABILITY RESULTS - (6 OF 43)
165	B-23	BORING LOGS AND PERMEABILITY RESULTS - (7 OF 43)
166	B-24	BORING LOGS AND PERMEABILITY RESULTS - (8 OF 43)
167	B-25	BORING LOGS AND PERMEABILITY RESULTS - (9 OF 43)
168	B-26	BORING LOGS AND PERMEABILITY RESULTS - (10 OF 43)
169	B-27	BORING LOGS AND PERMEABILITY RESULTS - (11 OF 43)
170	B-28	BORING LOGS AND PERMEABILITY RESULTS - (12 OF 43)
171	B-29	BORING LOGS AND PERMEABILITY RESULTS - (13 OF 43)
172	B-30	BORING LOGS AND PERMEABILITY RESULTS - (14 OF 43)
173	B-31	BORING LOGS AND PERMEABILITY RESULTS - (15 OF 43)
174	B-32	BORING LOGS AND PERMEABILITY RESULTS - (16 OF 43)

PAGE	SHEET	TITLE
175	B-33	BORING LOGS AND PERMEABILITY RESULTS - (17 OF 43)
176	B-34	BORING LOGS AND PERMEABILITY RESULTS - (18 OF 43)
177	B-35	BORING LOGS AND PERMEABILITY RESULTS - (19 OF 43)
178	B-36	BORING LOGS AND PERMEABILITY RESULTS - (20 OF 43)
179	B-37	BORING LOGS AND PERMEABILITY RESULTS - (21 OF 43)
180	B-38	BORING LOGS AND PERMEABILITY RESULTS - (22 OF 43)
181	B-39	BORING LOGS AND PERMEABILITY RESULTS - (23 OF 43)
182	B-40	BORING LOGS AND PERMEABILITY RESULTS - (24 OF 43)
183	B-41	BORING LOGS AND PERMEABILITY RESULTS - (25 OF 43)
184	B-42	BORING LOGS AND PERMEABILITY RESULTS - (26 OF 43)
185	B-43	BORING LOGS AND PERMEABILITY RESULTS - (27 OF 43)
186	B-44	BORING LOGS AND PERMEABILITY RESULTS - (28 OF 43)
187	B-45	BORING LOGS AND PERMEABILITY RESULTS - (29 OF 43)
188	B-46	BORING LOGS AND PERMEABILITY RESULTS - (30 OF 43)
189	B-47	BORING LOGS AND PERMEABILITY RESULTS - (31 OF 43)
190	B-48	BORING LOGS AND PERMEABILITY RESULTS - (32 OF 43)
191	B-49	BORING LOGS AND PERMEABILITY RESULTS - (33 OF 43)
192	B-50	BORING LOGS AND PERMEABILITY RESULTS - (34 OF 43)
193	B-51	BORING LOGS AND PERMEABILITY RESULTS - (35 OF 43)
194	B-52	BORING LOGS AND PERMEABILITY RESULTS - (36 OF 43)
195	B-53	BORING LOGS AND PERMEABILITY RESULTS - (37 OF 43)
196	B-54	BORING LOGS AND PERMEABILITY RESULTS - (38 OF 43)
197	B-55	BORING LOGS AND PERMEABILITY RESULTS - (39 OF 43)
198	B-56	BORING LOGS AND PERMEABILITY RESULTS - (40 OF 43)
199	B-57	BORING LOGS AND PERMEABILITY RESULTS - (41 OF 43)
200	B-58	BORING LOGS AND PERMEABILITY RESULTS - (42 OF 43)
201	B-59	BORING LOGS AND PERMEABILITY RESULTS - (43 OF 43)
202	S-1	470A, GS529A, GS529E, 530A, 561A, 601B - EXISTING CONDITIONS SURVEY
203	S-2	606A, GS635A, GS689A, IB711A - EXISTING CONDITIONS SURVEY
204	S-3	716A, 718A, 719A, 719B, 720A, IB759A - EXISTING CONDITIONS SURVEY
205	S-4	761A, 762A, 764A, 764B, 765A, 765B & 839A - EXISTING CONDITIONS SURVEY
206	S-5	840A, 840B, 840C, 841A, 841B, 860F, 860G & 862A - EXISTING CONDITIONS SURVEY
207	S-6	864B, 909A, 927A, 994A, IB997A & GS1047A - EXISTING CONDITIONS SURVEY
208	S-7	1050A, 1050B, GS1050C, 1052B, 1053A, 1053B, 1054A, 1054C - EXISTING CONDITIONS SURVEY
209	S-8	1109A, 1112A, GS1113-1A, IB1115A, 1115-1A, 1125A, 1125B - EXISTING CONDITIONS SURVEY
210	S-9	1125D, SGS523A - EXISTING CONDITIONS SURVEY
211	S-10	SGS557A, SGS558A - EXISTING CONDITIONS SURVEY
212	S-11	SGS601A, SGS610A - EXISTING CONDITIONS SURVEY
213	S-12	SGS712A, SGS714A - EXISTING CONDITIONS SURVEY
214	S-13	525B 532A 533A 533B - EXISTING CONDITIONS SURVEY
215	S-14	535A 535B 536A 538A 539A 539C - EXISTING CONDITIONS SURVEY
216	S-15	540B 541B 548A 548B 618A 621A - EXISTING CONDITIONS SURVEY
217	S-16	623A 623C 625A 627B 628A GS635D - EXISTING CONDITIONS SURVEY
218	S-17	GS635E 641A GS688A GS693A GS693C 698A - EXISTING CONDITIONS SURVEY

PAGE	SHEET	TITLE
219	S-18	698D 698E 701A 702C 703A 704B - EXISTING CONDITIONS SURVEY
220	S-19	704C 705A 707A 707D 707E - EXISTING CONDITIONS SURVEY
221	S-20	715A 767A 768A 768B 768D - EXISTING CONDITIONS SURVEY
222	S-21	769A 769B 769C 769F 769G - EXISTING CONDITIONS SURVEY
223	S-22	770A 770C 770D 770G 771B 772A - EXISTING CONDITIONS SURVEY
224	S-23	773C 773F 773H 774A 774B 778A - EXISTING CONDITIONS SURVEY
225	S-24	779A 780A 780B 780C 781A 782A - EXISTING CONDITIONS SURVEY
226	S-25	788A 788D 789A 789C 790A 792A - EXISTING CONDITIONS SURVEY
227	S-26	843B 843D 843G 845A 845B 845D - EXISTING CONDITIONS SURVEY
228	S-27	846A 847A 849A 849B 850A 852A - EXISTING CONDITIONS SURVEY
229	S-28	854A 854C 856A 856B 856C - EXISTING CONDITIONS SURVEY
230	S-29	857A 863B 864A 908B 916A 916B - EXISTING CONDITIONS SURVEY
231	S-30	916E 917E 919B 920A 920D 920E - EXISTING CONDITIONS SURVEY
232	S-31	924A GS925A GS992A 992B 992D 998C - EXISTING CONDITIONS SURVEY
233	S-32	GS1003A GS1003B 1008A GS1014A GS1014B GS1014C - EXISTING CONDITIONS SURVEY
234	S-33	GS1017A GS1017B GS1023A 1026A 1027A 1027B - EXISTING CONDITIONS SURVEY
235	S-34	1034A 1036A 1040A 1040B - EXISTING CONDITIONS SURVEY
236	S-35	GS1049A GS1049B 1084A 1088A 1088B 1092A - EXISTING CONDITIONS SURVEY
237	S-36	1096A 1100A 1100B 1100C 1104A 1104C - EXISTING CONDITIONS SURVEY
238	S-37	1123A 1123C 1124A 1124B - EXISTING CONDITIONS SURVEY
239	S-38	1126A 1126B 1126C 1129A 1130A 1131A - EXISTING CONDITIONS SURVEY
240	S-39	1132-1A 1132-1C 1132-1E 1133A 1133B - EXISTING CONDITIONS SURVEY
241	S-40	1133D 1133E 1134C 1137B 1138A 1138D - EXISTING CONDITIONS SURVEY
242	S-41	1139A 1139B 1141A 1142B 1142C - EXISTING CONDITIONS SURVEY
243	S-42	GS1149A GS1149C GS1149D 1152A GS1153A 1155A - EXISTING CONDITIONS SURVEY
244	S-43	1157-1A 1157-1B 1157A 1157C 1158-1A - EXISTING CONDITIONS SURVEY
245	S-44	1158B 1158C 1160A GS1161A 1162A 1162C - EXISTING CONDITIONS SURVEY
246	S-45	162C-1 GS1162E GS1162G GS1162H 1164A 1164B - EXISTING CONDITIONS SURVEY
247	S-46	1165-1D 1165-1E 1165-1F 1165A 1166-1A - EXISTING CONDITIONS SURVEY
248	S-47	1166-1D 1166-1E 1169A 1171-1A 1171A - EXISTING CONDITIONS SURVEY
249	S-48	1171C 1171D 1177A 1178A 1194A - EXISTING CONDITIONS SURVEY
250	S-49	1196A 1196B 1197A 1198A 1204A - EXISTING CONDITIONS SURVEY
251	S-50	GS1206A GS1206B GS1206C GS1206E - EXISTING CONDITIONS SURVEY
252	S-51	1207C 1207D 1209A 1225A 1228A 1252B - EXISTING CONDITIONS SURVEY
253	S-52	1253A 1253C 1253D 1255A 1258A 1261D - EXISTING CONDITIONS SURVEY
254	S-53	GS1261B GS1261C GS1262A 1263B 1264-1A 1264A - EXISTING CONDITIONS SURVEY
255	S-54	1266A 1269A GS1270AA 1270B 1271-1A - EXISTING CONDITIONS SURVEY
256	S-55	1275A 1276A 1276C 1277A 1277B 1277D - EXISTING CONDITIONS SURVEY
257	S-56	1278A 1278B 1278C 1285-1B 1285-2A 1285A - EXISTING CONDITIONS SURVEY
258	S-57	1286A 1286C GS1288A 1294A 1294B 1295A - EXISTING CONDITIONS SURVEY
259	S-58	1296A 1296B 1298A 1298B 1298C - EXISTING CONDITIONS SURVEY
260	S-59	SGS 534A SGS 542A - EXISTING CONDITIONS SURVEY
261	S-60	SGS 544A SGS 551A - EXISTING CONDITIONS SURVEY
262	S-61	SGS 604A SGS 624A - EXISTING CONDITIONS SURVEY

PAGE	SHEET	TITLE
263	S-62	SGS 630A SGS 681A - EXISTING CONDITIONS SURVEY
264	S-63	SGS 686A SGS 692A - EXISTING CONDITIONS SURVEY
265	S-64	SGS 708A SGS 1004A - EXISTING CONDITIONS SURVEY
266	S-65	SGS 1005A SGS 1016A - EXISTING CONDITIONS SURVEY
267	S-66	SGS 1019A SGS 1024A - EXISTING CONDITIONS SURVEY
268	S-67	SGS 1025A SGS 1038A - EXISTING CONDITIONS SURVEY
269	S-68	SGS 1038B SGS 1129A - EXISTING CONDITIONS SURVEY
270	S-69	SGS 1141A SGS 1144A - EXISTING CONDITIONS SURVEY
271	S-70	SGS 1154A SGS 1158A - EXISTING CONDITIONS SURVEY
272	S-71	SGS 1161A SGS 1197A - EXISTING CONDITIONS SURVEY
273	S-72	SGS 1201A SGS 1207A - EXISTING CONDITIONS SURVEY
274	S-73	SGS 1291A - EXISTING CONDITIONS SURVEY

LIST OF STANDARD DRAWINGS

General Sheet No.	Revised Date	Description	Agency
ALL	12/19/2017	JULY 2017 GREEN INFRASTRUCTURE STANDARDS CORRECTIONS AND CLARIFICATIONS	NYC DEP-BEDC-GI
ALL	7/19/2017	STANDARD DESIGN AND GUIDELINES FOR GREEN INFRASTRUCTURE PRACTICES	NYC DEP-BEDC-GI
GI-101	7/19/2017	STANDARD FOR 20'X5' R.O.W. BIOSWALE TYPE 1	NYC DEP-BEDC-GI
GI-102	7/19/2017	STANDARD FOR 20'X5' R.O.W. BIOSWALE TYPE 1	NYC DEP-BEDC-GI
GI-103	7/19/2017	STANDARD FOR 20'X5' R.O.W. BIOSWALE TYPE 1A - WITH STONE COLUMNS	NYC DEP-BEDC-GI
GI-104	7/19/2017	STANDARD FOR 20'X5' R.O.W. BIOSWALE TYPE 1A - WITH STONE COLUMNS	NYC DEP-BEDC-GI
GI-105	7/19/2017	STANDARD FOR 20'X5' R.O.W. BIOSWALE TYPE 1B - WITH STORMWATER INLET	NYC DEP-BEDC-GI
GI-106	7/19/2017	STANDARD FOR 20'X5' R.O.W. BIOSWALE TYPE 1B - WITH STORMWATER INLET	NYC DEP-BEDC-GI
GI-107	7/19/2017	STANDARD FOR 20'X5' R.O.W. BIOSWALE TYPE 1C - WITH STORMWATER CHAMBER	NYC DEP-BEDC-GI
GI-108	7/19/2017	STANDARD FOR 20'X5' R.O.W. BIOSWALE TYPE 1C - WITH STORMWATER CHAMBER	NYC DEP-BEDC-GI
GI-109	7/19/2017	STANDARD FOR 15'X5' R.O.W. BIOSWALE TYPE 2	NYC DEP-BEDC-GI
GI-110	7/19/2017	STANDARD FOR 15'X5' R.O.W. BIOSWALE TYPE 2	NYC DEP-BEDC-GI
GI-111	7/19/2017	STANDARD FOR 15'X5' R.O.W. BIOSWALE TYPE 2A - WITH STONE COLUMNS	NYC DEP-BEDC-GI
GI-112	7/19/2017	STANDARD FOR 15'X5' R.O.W. BIOSWALE TYPE 2A - WITH STONE COLUMNS	NYC DEP-BEDC-GI
GI-113	7/19/2017	STANDARD FOR 15'X5' R.O.W. BIOSWALE TYPE 2B - WITH STORMWATER INLET	NYC DEP-BEDC-GI
GI-114	7/19/2017	STANDARD FOR 15'X5' R.O.W. BIOSWALE TYPE 2B - WITH STORMWATER INLET	NYC DEP-BEDC-GI
GI-115	7/19/2017	STANDARD FOR 15'X5' R.O.W. BIOSWALE TYPE 2C - WITH STORMWATER CHAMBER	NYC DEP-BEDC-GI
GI-116	7/19/2017	STANDARD FOR 15'X5' R.O.W. BIOSWALE TYPE 2C - WITH STORMWATER CHAMBER	NYC DEP-BEDC-GI
GI-117	7/19/2017	STANDARD FOR 10'X5' R.O.W. BIOSWALE TYPE 3	NYC DEP-BEDC-GI
GI-118	7/19/2017	STANDARD FOR 10'X5' R.O.W. BIOSWALE TYPE 3	NYC DEP-BEDC-GI
GI-119	7/19/2017	STANDARD FOR 10'X5' R.O.W. BIOSWALE TYPE 3A - WITH STONE COLUMN	NYC DEP-BEDC-GI
GI-120	7/19/2017	STANDARD FOR 10'X5' R.O.W. BIOSWALE TYPE 3A - WITH STONE COLUMN	NYC DEP-BEDC-GI
GI-121	7/19/2017	STANDARD FOR R.O.W. RAIN GARDEN TYPE 1, TYPE 2, AND TYPE 3	NYC DEP-BEDC-GI
GI-122	7/19/2017	DIMENSION SCHEDULE FOR VARIABLE SIZE R.O.W. BIOSWALE AND R.O.W. RAIN GARDEN	NYC DEP-BEDC-GI
GI-123	7/19/2017	STONE COLUMN SCHEDULE FOR VARIABLE SIZE R.O.W. BIOSWALE	NYC DEP-BEDC-GI
GI-124	7/19/2017	SURFACE GRADING PLANS FOR R.O.W. BIOSWALES AND R.O.W. RAIN GARDENS	NYC DEP-BEDC-GI

LIST OF STANDARD DRAWINGS

GI-125	7/19/2017	STANDARD FOR HYDRAULICALLY CONNECTED R.O.W.B. - PERFORATED PIPE	NYC DEP-BEDC-GI
GI-126	7/19/2017	STANDARD FOR 20'X3'-6" R.O.W. GREENSTRIP TYPE 1	NYC DEP-BEDC-GI
GI-127	7/19/2017	STANDARD FOR 20'X3'-6" R.O.W. GREENSTRIP TYPE 1	NYC DEP-BEDC-GI
GI-128	7/19/2017	STANDARD FOR 15'X3'-6" R.O.W. GREENSTRIP TYPE 2	NYC DEP-BEDC-GI
GI-129	7/19/2017	STANDARD FOR 15'X3'-6" R.O.W. GREENSTRIP TYPE 2	NYC DEP-BEDC-GI
GI-130	7/19/2017	STANDARD FOR 10'X3'-6" R.O.W. GREENSTRIP TYPE 3	NYC DEP-BEDC-GI
GI-131	7/19/2017	STANDARD FOR 10'X3'-6" R.O.W. GREENSTRIP TYPE 3	NYC DEP-BEDC-GI
GI-132	7/19/2017	SURFACE GRADING & DIMENSION SCHEDULE PLANS FOR R.O.W. GREENSTRIPS	NYC DEP-BEDC-GI
GI-133	7/19/2017	STANDARD FOR HYDRAULICALLY CONNECTED R.O.W. GREENSTRIPS	NYC DEP-BEDC-GI
GI-134	7/19/2017	STANDARD FOR R.O.W. PRECAST POROUS CONCRETE PAVEMENT	NYC DEP-BEDC-GI
GI-135	7/19/2017	STANDARD FOR R.O.W. STORMWATER SEEPAGE BASIN WITH TYPE 2 CATCH BASIN	NYC DEP-BEDC-GI
GI-136	7/19/2017	STANDARD FOR 20'X5' R.O.W. INFILTRATION BASIN WITH CONCRETE TOP TYPE 1	NYC DEP-BEDC-GI
GI-137	7/19/2017	STANDARD FOR 20'X5' R.O.W. INFILTRATION BASIN WITH CONCRETE TOP TYPE 1	NYC DEP-BEDC-GI
GI-138	7/19/2017	STANDARD FOR 20'X5' R.O.W. INFILTRATION BASIN WITH CONCRETE TOP TYPE 1A - WITH STONE COLUMNS	NYC DEP-BEDC-GI
GI-139	7/19/2017	STANDARD FOR 20'X5' R.O.W. INFILTRATION BASIN WITH CONCRETE TOP TYPE 1A - WITH STONE COLUMNS	NYC DEP-BEDC-GI
GI-140	7/19/2017	STANDARD FOR 20'X5' R.O.W. INFILTRATION BASIN WITH CONCRETE TOP TYPE 1C - WITH STORMWATER CHAMBER	NYC DEP-BEDC-GI
GI-141	7/19/2017	STANDARD FOR 20'X5' R.O.W. INFILTRATION BASIN WITH CONCRETE TOP TYPE 1C - WITH STORMWATER CHAMBER	NYC DEP-BEDC-GI
GI-142	7/19/2017	STANDARD FOR 15'X5' R.O.W. INFILTRATION BASIN WITH CONCRETE TOP TYPE 2	NYC DEP-BEDC-GI
GI-143	7/19/2017	STANDARD FOR 15'X5' R.O.W. INFILTRATION BASIN WITH CONCRETE TOP TYPE 2	NYC DEP-BEDC-GI
GI-144	7/19/2017	STANDARD FOR 15'X5' R.O.W. INFILTRATION BASIN WITH CONCRETE TOP TYPE 2A - WITH STONE COLUMNS	NYC DEP-BEDC-GI
GI-145	7/19/2017	STANDARD FOR 15'X5' R.O.W. INFILTRATION BASIN WITH CONCRETE TOP TYPE 2A - WITH STONE COLUMNS	NYC DEP-BEDC-GI
GI-146	7/19/2017	STANDARD FOR 15'X5' R.O.W. INFILTRATION BASIN WITH CONCRETE TOP TYPE 2C - WITH STORMWATER CHAMBER	NYC DEP-BEDC-GI
GI-147	7/19/2017	STANDARD FOR 15'X5' R.O.W. INFILTRATION BASIN WITH CONCRETE TOP TYPE 2C - WITH STORMWATER CHAMBER	NYC DEP-BEDC-GI
GI-148	7/19/2017	STANDARD FOR 10'X5' R.O.W. INFILTRATION BASIN WITH CONCRETE TOP TYPE 3	NYC DEP-BEDC-GI
GI-149	7/19/2017	STANDARD FOR 10'X5' R.O.W. INFILTRATION BASIN WITH CONCRETE TOP TYPE 3	NYC DEP-BEDC-GI
GI-150	7/19/2017	STANDARD FOR 10'X5' R.O.W. INFILTRATION BASIN WITH CONCRETE TOP TYPE 3A - WITH STONE COLUMNS	NYC DEP-BEDC-GI
GI-151	7/19/2017	STANDARD FOR 10'X5' R.O.W. INFILTRATION BASIN WITH CONCRETE TOP TYPE 3A - WITH STONE COLUMNS	NYC DEP-BEDC-GI

LIST OF STANDARD DRAWINGS

GI-152	7/19/2017	STANDARD FOR 20'X5' R.O.W. INFILTRATION BASIN WITH GRASS TOP TYPE 1	NYC DEP-BEDC-GI
GI-153	7/19/2017	STANDARD FOR 20'X5' R.O.W. INFILTRATION BASIN WITH GRASS TOP TYPE 1	NYC DEP-BEDC-GI
GI-154	7/19/2017	STANDARD FOR 20'X5' R.O.W. INFILTRATION BASIN WITH GRASS TOP TYPE 1A - WITH STONE COLUMNS	NYC DEP-BEDC-GI
GI-155	7/19/2017	STANDARD FOR 20'X5' R.O.W. INFILTRATION BASIN WITH GRASS TOP TYPE 1A - WITH STONE COLUMNS	NYC DEP-BEDC-GI
GI-156	7/19/2017	STANDARD FOR 20'X5' R.O.W. INFILTRATION BASIN WITH GRASS TOP TYPE 1C - WITH STORMWATER CHAMBER	NYC DEP-BEDC-GI
GI-157	7/19/2017	STANDARD FOR 20'X5' R.O.W. INFILTRATION BASIN WITH GRASS TOP TYPE 1C - WITH STORMWATER CHAMBER	NYC DEP-BEDC-GI
GI-158	7/19/2017	STANDARD FOR 15'X5' R.O.W. INFILTRATION BASIN WITH GRASS TOP TYPE 2	NYC DEP-BEDC-GI
GI-159	7/19/2017	STANDARD FOR 15'X5' R.O.W. INFILTRATION BASIN WITH GRASS TOP TYPE 2	NYC DEP-BEDC-GI
GI-160	7/19/2017	STANDARD FOR 15'X5' R.O.W. INFILTRATION BASIN WITH GRASS TOP TYPE 2A - WITH STONE COLUMNS	NYC DEP-BEDC-GI
GI-161	7/19/2017	STANDARD FOR 15'X5' R.O.W. INFILTRATION BASIN WITH GRASS TOP TYPE 2A - WITH STONE COLUMNS	NYC DEP-BEDC-GI
GI-162	7/19/2017	STANDARD FOR 15'X5' R.O.W. INFILTRATION BASIN WITH GRASS TOP TYPE 2C - WITH STORMWATER CHAMBER	NYC DEP-BEDC-GI
GI-163	7/19/2017	STANDARD FOR 15'X5' R.O.W. INFILTRATION BASIN WITH GRASS TOP TYPE 2C - WITH STORMWATER CHAMBER	NYC DEP-BEDC-GI
GI-164	7/19/2017	STANDARD FOR 10'X5' R.O.W. INFILTRATION BASIN WITH GRASS TOP TYPE 3	NYC DEP-BEDC-GI
GI-165	7/19/2017	STANDARD FOR 10'X5' R.O.W. INFILTRATION BASIN WITH GRASS TOP TYPE 3	NYC DEP-BEDC-GI
GI-166	7/19/2017	STANDARD FOR 10'X5' R.O.W. INFILTRATION BASIN WITH GRASS TOP TYPE 3A - WITH STONE COLUMNS	NYC DEP-BEDC-GI
GI-167	7/19/2017	STANDARD FOR 10'X5' R.O.W. INFILTRATION BASIN WITH GRASS TOP TYPE 3A - WITH STONE COLUMNS	NYC DEP-BEDC-GI
GI-168	7/19/2017	DIMENSION SCHEDULE FOR VARIABLE SIZE R.O.W. INFILTRATION BASINS	NYC DEP-BEDC-GI
GI-169	7/19/2017	STANDARD FOR R.O.W. INFILTRATION BASIN WITH COMBINATION OF CONCRETE & GRASS TOP	NYC DEP-BEDC-GI
GI-170	7/19/2017	STANDARD FOR R.O.W. INFILTRATION BASIN WITH COMBINATION OF CONCRETE & GRASS TOP	NYC DEP-BEDC-GI
GI-201	7/19/2017	STANDARD ROWB/ROWGS/ROWRG INLET WITH PRECAST CONCRETE SEDIMENT PAD	NYC DEP-BEDC-GI
GI-202	7/19/2017	STANDARD FOR STORMWATER INLET	NYC DEP-BEDC-GI
GI-203	7/19/2017	STANDARD FOR PRECAST STORMWATER INLET	NYC DEP-BEDC-GI
GI-204	7/19/2017	STANDARD R.O.W. SECTIONS AND DETAILS	NYC DEP-BEDC-GI
GI-205	7/19/2017	STANDARD DETAILS FOR R.O.W. STORMWATER INFILTRATION BASIN	NYC DEP-BEDC-GI
GI-206	7/19/2017	STANDARD R.O.W. SECTIONS AND DETAILS	NYC DEP-BEDC-GI
GI-207	7/19/2017	STANDARD FOR ROW INFILTRATION BASIN INLET WITH PRECAST CONCRETE CHAMBER	NYC DEP-BEDC-GI

LIST OF STANDARD DRAWINGS

GI-301	7/19/2017	SUGGESTED GUIDELINES FOR R.O.W. STORMWATER GREENSTREET (ROWSGS) TYPE 1 LAYOUT	NYC DEP-BEDC-GI
GI-302	7/19/2017	SUGGESTED GUIDELINES FOR R.O.W. STORMWATER GREENSTREET (ROWSGS) TYPE 1 LAYOUT	NYC DEP-BEDC-GI
GI-303	7/19/2017	SUGGESTED GUIDELINES FOR R.O.W. STORMWATER GREENSTREET (ROWSGS) TYPE 1A-WITH STONE COLUMNS LAYOUT	NYC DEP-BEDC-GI
GI-304	7/19/2017	SUGGESTED GUIDELINES FOR R.O.W. STORMWATER GREENSTREET (ROWSGS) TYPE 1A-WITH STONE COLUMNS LAYOUT	NYC DEP-BEDC-GI
GI-305	7/19/2017	SUGGESTED GUIDELINES FOR R.O.W. STORMWATER GREENSTREET (ROWSGS) TYPE 2 LAYOUT	NYC DEP-BEDC-GI
GI-306	7/19/2017	SUGGESTED GUIDELINES FOR R.O.W. STORMWATER GREENSTREET (ROWSGS) TYPE 2 LAYOUT	NYC DEP-BEDC-GI
GI-307	7/19/2017	SUGGESTED GUIDELINES FOR R.O.W. STORMWATER GREENSTREET (ROWSGS) TYPE 2A-WITH STONE COLUMNS LAYOUT	NYC DEP-BEDC-GI
GI-308	7/19/2017	SUGGESTED GUIDELINES FOR R.O.W. STORMWATER GREENSTREET (ROWSGS) TYPE 2A-WITH STONE COLUMNS LAYOUT	NYC DEP-BEDC-GI
GI-309	7/19/2017	SUGGESTED GUIDELINES FOR R.O.W. STORMWATER GREENSTREET (ROWSGS) TYPE 3 LAYOUT	NYC DEP-BEDC-GI
GI-310	7/19/2017	SUGGESTED GUIDELINES FOR R.O.W. STORMWATER GREENSTREET (ROWSGS) BIOFILTER INLET LAYOUT	NYC DEP-BEDC-GI
GI-311	7/19/2017	SUGGESTED GUIDELINES FOR R.O.W. STORMWATER GREENSTREET (ROWSGS) BIOFILTER INLET	NYC DEP-BEDC-GI
GI-312	7/19/2017	SUGGESTED GUIDELINES FOR R.O.W. STORMWATER GREENSTREET (ROWSGS) CONCRETE AND GRATE PEDESTRIAN PATHWAYS	NYC DEP-BEDC-GI
GI-501A	7/19/2017	A STANDARD PLANTING PLANS FOR TYPE 1 R.O.W. BIOSWALES AND R.O.W. RAIN GARDENS	NYC DEP-BEDC-GI
GI-501B	7/19/2017	B STANDARD PLANTING PLANS FOR TYPE 1 R.O.W. BIOSWALES AND R.O.W. RAIN GARDENS	NYC DEP-BEDC-GI
GI-501C	7/19/2017	C STANDARD PLANTING PLANS FOR TYPE 1 R.O.W. BIOSWALES AND R.O.W. RAIN GARDENS	NYC DEP-BEDC-GI
GI-501D	7/19/2017	D STANDARD PLANTING PLANS FOR TYPE 1 R.O.W. BIOSWALES AND R.O.W. RAIN GARDENS	NYC DEP-BEDC-GI
GI-502A	7/19/2017	A STANDARD PLANTING PLANS FOR TYPE 2 R.O.W. BIOSWALES AND R.O.W. RAIN GARDENS	NYC DEP-BEDC-GI
GI-502B	7/19/2017	B STANDARD PLANTING PLANS FOR TYPE 2 R.O.W. BIOSWALES AND R.O.W. RAIN GARDENS	NYC DEP-BEDC-GI
GI-502C	7/19/2017	C STANDARD PLANTING PLANS FOR TYPE 2 R.O.W. BIOSWALES AND R.O.W. RAIN GARDENS	NYC DEP-BEDC-GI
GI-502D	7/19/2017	D STANDARD PLANTING PLANS FOR TYPE 2 R.O.W. BIOSWALES AND R.O.W. RAIN GARDENS	NYC DEP-BEDC-GI
GI-503A	7/19/2017	A STANDARD PLANTING PLANS FOR TYPE 3 R.O.W. BIOSWALES AND R.O.W. RAIN GARDENS	NYC DEP-BEDC-GI
GI-503B	7/19/2017	B STANDARD PLANTING PLANS FOR TYPE 3 R.O.W. BIOSWALES AND R.O.W. RAIN GARDENS	NYC DEP-BEDC-GI

LIST OF STANDARD DRAWINGS

GI-503C	7/19/2017	C STANDARD PLANTING PLANS FOR TYPE 3 R.O.W. BIOSWALES AND R.O.W. RAIN GARDENS	NYC DEP-BEDC-GI
GI-503D	7/19/2017	D STANDARD PLANTING PLANS FOR TYPE 3 R.O.W. BIOSWALES AND R.O.W. RAIN GARDENS	NYC DEP-BEDC-GI
GI-504A	7/19/2017	A STANDARD PLANTING PLANS FOR TYPE 1 & TYPE 2 R.O.W. GREENSTRIPS	NYC DEP-BEDC-GI
GI-504B	7/19/2017	B STANDARD PLANTING PLANS FOR TYPE 1 & TYPE 2 R.O.W. GREENSTRIPS	NYC DEP-BEDC-GI
GI-504C	7/19/2017	C STANDARD PLANTING PLANS FOR TYPE 3 R.O.W. GREENSTRIPS	NYC DEP-BEDC-GI
GI-601A	7/19/2017	A STANDARD FOR R.O.W. BIOSWALES AND R.O.W. RAIN GARDENS - TYPE 'A' STEEL GUARD	NYC DEP-BEDC-GI
GI-601B	7/19/2017	B STANDARD FOR R.O.W. BIOSWALES AND R.O.W. RAIN GARDENS - TYPE 'B' STEEL GUARD	NYC DEP-BEDC-GI
GI-601C	7/19/2017	C STANDARD FOR R.O.W. BIOSWALES AND R.O.W. RAIN GARDENS - TYPE 'C' STEEL GUARD	NYC DEP-BEDC-GI
GI-601D	7/19/2017	D STANDARD FOR R.O.W. BIOSWALES AND R.O.W. RAIN GARDENS - TYPE 'D' STEEL GUARD	NYC DEP-BEDC-GI
GI-602A	7/19/2017	A STANDARD FOR R.O.W. BIOSWALES - TYPE 'B-1' STEEL GUARD WITH BOLTED PANELS	NYC DEP-BEDC-GI
GI-602A-1	7/19/2017	A-1 STANDARD DETAILS FOR R.O.W. BIOSWALES - TYPE 'B-1' STEEL GUARD WITH BOLTED PANELS	NYC DEP-BEDC-GI
38226-Y-A	11/1/2010	STANDARD FABRICATED CONNECTIONS FOR STEEL MAINS	NYC DEP BWSO
42063-Y	11/1/2010	SHALLOW CROSSING FOR WATER MAINS, 24" DIAMETER AND SMALLER	NYC DEP BWSO
46104-W	11/1/2010	INSULATED FLANGE JOINTS FOR REDUCTION OF ELECTROLYSIS IN TRUNK MAINS	NYC DEP BWSO
46464-Z	11/1/2010	METHOD FOR PROTECTING D.I. WATER MAINS WITH SHALLOW (LESS THAN 24") COVER	NYC DEP BWSO
H-1011	3/15/2016	SIDEWALK PEDESTRIAN RAMPS	NYC DOT
H-1044	3/15/2016	CONCRETE CURB	NYC DOT
H-1045	3/15/2016	CONCRETE SIDEWALK	NYC DOT
ALL	6/11/2018	FDNY PLANT OPERATIONS STANDARD DRAWINGS AND STANDARDS SPECIFICATIONS FOR CONSTRUCTION WORK	FDNY

BID SCHEDULE

The following pages contain the Bid Schedule. Items listed in the Bid Schedule shall comply with the requirements of the corresponding sections of the specifications detailed in the table below. All references to the Standard Specifications, Details, Standards, and Drawings shall be to the version in effect at the time of bid.

NOTES:

- "XXX" in the table below signifies any possible combination of characters and spaces.
- The table below may contain item formats which are not included in the Bid Schedule.
- ***Please refer to the Bid Schedule to determine which specifications apply.***

Item Number Format	Applicable Specifications
4.XXX 6.XXX 7.XXX 8.XXX *(Except 8.01 XXX; see below)* 9.XXX	NYC Department of Transportation ("DOT") Standard Highway Specifications, as amended in the R-Pages, located in Volume 3 of 3 herein; ***AND*** NYC DOT Standard Details of Construction; ***OR,*** ***if the item is not contained within the Standard Specifications***, then see the applicable New Sections in the I-Pages, located in Volume 3 of 3 herein.
1.XXX 50.XXX through 55.XXX 60.XXX through 66.XXX 70.XXX through 79.XXX *(Except 79.11XXX; see below)* DSS XXX DSW XXX	NYC Department of Environmental Protection ("DEP") Standard Sewer and Water Main Specifications, as amended in the R-Pages and SW-Pages, located in Volume 3 of 3 herein; ***AND*** NYC DOT Specifications for Trunk Main Work; ***AND*** NYC DOT Sewer Design Standards; ***AND*** NYC DOT Water Main Standard Drawings; ***OR,*** ***if the item is not contained within the Standard Specifications,*** then see the Amendments to the Standard Sewer and Water Main Specifications in the SW-Pages, located in Volume 3 of 3 herein.
GI-XXX PM-XXX ROW XXX	New Sections in the I-Pages, located in Volume 3 of 3 herein ***AND*** NYC DEP Standards for Green Infrastructure.
UTL-XXX	Gas Cost Sharing Standard Specifications in the EP7-Pages, located in Volume 3 of 3 herein.

BID SCHEDULE

Item Number Format	Applicable Specifications
83X.XXX HW-XXX MX.XXX MP XXX NYC-XXX NYCT-XXX NYPD-XXX P XXX PK-XXX	New Sections in the I-Pages, located in Volume 3 of 3 herein.
BMP-XXX	Specifications for Construction of Best Management Practice (BMP) and Mitigation Area in the BMP-Pages, located in Volume 3 of 3 herein.
E XXX ME XXX	Specifications for the Specialty Electrical Works in the EL-Pages, located in Volume 3 of 3 herein.
SL-XXX	NYC DOT Division of Street Lighting Specifications ***AND*** NYC Division of Street Lighting Standard Drawings.
T-XXX	NYC DOT Specifications for Traffic Signals and Intelligent Transportation Systems ***AND*** NYC DOT Traffic Signal Standard Drawings.
JB XXX	Joint Bid Specifications in the JB-Pages, located in Volume 3 of 3 herein.
8.01 XXX	Specifications for Handling, Transportation and Disposal of Nonhazardous and Potentially Hazardous Contaminated Materials in the HAZ-Pages, located in Volume 3 of 3 herein.
67.XXX	Specifications for Abatement of Coal Tar Wrap Asbestos Containing Materials in the ASB-Pages, located in Volume 3 of 3 herein.
79.11XXX	Specifications for Abatement of Transit Authority Duct Insulation Asbestos Containing Materials in the ASB-Pages, located in Volume 3 of 3 herein.

(NO FURTHER TEXT ON THIS PAGE)

NEW YORK CITY DEPARTMENT OF DESIGN AND CONSTRUCTION
DIVISION OF INFRASTRUCTURE - BUREAU OF DESIGN

Contract PIN 8502019HW0004C
Project ID **GCJA03-2B**

BID SCHEDULE

NOTE: (1) The Agency may reject a bid if it contains unbalanced bid prices. An unbalanced bid is considered to be one containing lump sum or unit items which do not reflect reasonable actual costs plus a reasonable proportionate share of the Bidder's anticipated profit, overhead costs, and other indirect costs, anticipated for the performance of the items in question.

(2) The following bid prices on Unit Price Contracts are to be paid for the actual quantities of the several classes of work in the completed work or structure, and they cover the cost of all work, labor, material, tools, plant and appliances of every description necessary to complete the entire work, as specified, and the removal of all debris, temporary work and appliances.

(3) PLEASE BE SURE A LEGIBLE BID IS ENTERED, IN INK, FOR EACH ITEM. Alterations must be initialed in ink by the bidder.

(4) The Extended Amount entered in Column 5 shall be the product of the Estimated Quantity in Column 2 times the Unit Price Bid in Column 4.

(5) Prospective bidders must examine the Bid Schedule carefully and, before bidding, must advise the Commissioner, in writing, if any pages are missing, and must request that such missing pages be furnished them. The pages of this Bid Schedule are numbered consecutively, as follows: **B - 3 through B - 26**

NEW YORK CITY DEPARTMENT OF DESIGN AND CONSTRUCTION
DIVISION OF INFRASTRUCTURE - BUREAU OF DESIGN

Contract PIN 8502019HW0004C
Project ID GCJA03-2B

COL. 1 ITEM NUMBER (SEQUENCE NO.)	COL. 2 ENGINEER'S ESTIMATE OF QUANTITIES	COL. 3 CLASSIFICATIONS	COL. 4 UNIT PRICES (IN FIGURES) DOLLARS	CTS	COL. 5 EXTENDED AMOUNTS (IN FIGURES) DOLLARS	CTS
4.02 AF-R (001)	2,278.0 S.Y.	ASPHALTIC CONCRETE WEARING COURSE, 2" THICK	$ 58	00	$ 132,124	00
4.02 CB (002)	200.0 TONS	ASPHALTIC CONCRETE MIXTURE	$ 240	00	$ 48,000	00
4.08 AA (003)	6,354.0 L.F.	CONCRETE CURB (18" DEEP)	$ 102	00	$ 648,108	00
4.09 AD (004)	7,251.0 L.F.	STRAIGHT STEEL FACED CONCRETE CURB (18" DEEP)	$ 210	00	$ 1,522,710	00

01/17/2019
8:14AM
BID PAGES

NEW YORK CITY DEPARTMENT OF DESIGN AND CONSTRUCTION
DIVISION OF INFRASTRUCTURE - BUREAU OF DESIGN

Contract PIN 8502019HW0004C
Project ID **GCJA03-2B**

COL. 1 ITEM NUMBER (SEQUENCE NO.)	COL. 2 ENGINEER'S ESTIMATE OF QUANTITIES	COL. 3 CLASSIFICATIONS	COL. 4 UNIT PRICES (IN FIGURES) DOLLARS	CTS	COL. 5 EXTENDED AMOUNTS (IN FIGURES) DOLLARS	CTS
4.09 BD (005)	45.0 L.F.	DEPRESSED STEEL FACED CONCRETE CURB (18" DEEP)	$ 150	00	$ 6,750	00
4.09 CD (006)	200.0 L.F.	CORNER STEEL FACED CONCRETE CURB (18" DEEP)	$ 220	00	$ 44,000	00
4.11 AA (007)	307.0 C.Y.	ROCK EXCAVATION IN STREETS, TRENCHES AND STRUCTURES	$ 500	00	$ 153,500	00
4.11 AS (008)	165.0 C.Y.	EARTH EXCAVATION FOR STRUCTURES	$ 170	00	$ 28,050	00

NEW YORK CITY DEPARTMENT OF DESIGN AND CONSTRUCTION
DIVISION OF INFRASTRUCTURE - BUREAU OF DESIGN

Contract PIN 8502019HW0004C
Project ID **GCJA03-2B**

COL. 1 ITEM NUMBER (SEQUENCE NO.)	COL. 2 ENGINEER'S ESTIMATE OF QUANTITIES	COL. 3 CLASSIFICATIONS	COL. 4 UNIT PRICES (IN FIGURES) DOLLARS	CTS	COL. 5 EXTENDED AMOUNTS (IN FIGURES) DOLLARS	CTS
4.11 CA (009)	30.0 C.Y.	FILL, PLACE MEASUREMENT	$ 130	00	$ 3,900	00
4.11 CD (010)	100.0 C.Y.	SELECT GRANULAR FILL, VEHICLE MEASUREMENT	$ 90	00	$ 9,000	00
4.13 AA-S (011)	92,765.0 S.F.	4" CONCRETE SIDEWALK (UNPIGMENTED)	$ 30	00	$ 2,782,950	00
4.13 BAS (012)	1,000.0 S.F.	7" CONCRETE SIDEWALK (UNPIGMENTED)	$ 40	00	$ 40,000	00

NEW YORK CITY DEPARTMENT OF DESIGN AND CONSTRUCTION
DIVISION OF INFRASTRUCTURE - BUREAU OF DESIGN

Contract PIN 8502019HW0004C
Project ID **GCJA03-2B**

COL. 1 ITEM NUMBER (SEQUENCE NO.)	COL. 2 ENGINEER'S ESTIMATE OF QUANTITIES	COL. 3 CLASSIFICATIONS	COL. 4 UNIT PRICES (IN FIGURES) DOLLARS	CTS	COL. 5 EXTENDED AMOUNTS (IN FIGURES) DOLLARS	CTS
4.13 DE (013)	200.0 S.F.	EMBEDDED PREFORMED DETECTABLE WARNING UNITS	$ 50	00	$ 10,000	00
4.16 AA (014)	12.0 EACH	TREES REMOVED (4" TO UNDER 12" CALIPER)	$ 560	00	$ 6,720	00
4.16 AAT (015)	3.0 EACH	TREES TRANSPLANTED, UP TO 4" CALIPER, ALL TYPES	$ 900	00	$ 2,700	00
4.16 BA (016)	116.0 EACH	TREES PLANTED, 2-1/2" TO 3" CALIPER, ALL TYPES	$ 620	00	$ 71,920	00

NEW YORK CITY DEPARTMENT OF DESIGN AND CONSTRUCTION
DIVISION OF INFRASTRUCTURE - BUREAU OF DESIGN

Contract PIN 8502019HW0004C
Project ID **GCJA03-2B**

COL. 1 ITEM NUMBER (SEQUENCE NO.)	COL. 2 ENGINEER'S ESTIMATE OF QUANTITIES	COL. 3 CLASSIFICATIONS	COL. 4 UNIT PRICES (IN FIGURES) DOLLARS	CTS	COL. 5 EXTENDED AMOUNTS (IN FIGURES) DOLLARS	CTS
4.16 STUMP (017)	5.0 UNITS	STUMP REMOVAL	$ 730	00	$ 3,650	00
4.17 CPL (018)	86.0 EACH	PLUGS, GRASSES	$ 50	00	$ 4,300	00
4.17 D3G (019)	125.0 EACH	SHRUBS PLANTED, DECIDUOUS, 3 GALLON, ALL TYPES	$ 60	00	$ 7,500	00
4.17 D5G (020)	2,824.0 EACH	SHRUBS PLANTED, DECIDUOUS, 5 GALLON, ALL TYPES	$ 60	00	$ 169,440	00

01/17/2019
8:14AM
BID PAGES

NEW YORK CITY DEPARTMENT OF DESIGN AND CONSTRUCTION
DIVISION OF INFRASTRUCTURE - BUREAU OF DESIGN

Contract PIN 8502019HW0004C
Project ID **GCJA03-2B**

COL. 1 ITEM NUMBER (SEQUENCE NO.)	COL. 2 ENGINEER'S ESTIMATE OF QUANTITIES	COL. 3 CLASSIFICATIONS	COL. 4 UNIT PRICES (IN FIGURES) DOLLARS	CTS	COL. 5 EXTENDED AMOUNTS (IN FIGURES) DOLLARS	CTS
4.17 EG5G (021)	4,153.0 EACH	SHRUBS PLANTED, EVERGREEN, 5 GALLON, ALL TYPES	$ 60	00	$ 249,180	00
4.17 OG2G (022)	2,034.0 EACH	ORNAMENTAL GRASS PLANTED, 2 GALLON	$ 20	00	$ 40,680	00
4.17 PG1G (023)	3,135.0 EACH	PERENNIALS OR GROUNDCOVERS, PLANTED, 1 GALLON, ALL TYPES	$ 12	00	$ 37,620	00
4.17 PG2G (024)	6,478.0 EACH	PERENNIALS OR GROUNDCOVERS, PLANTED, 2 GALLON, ALL TYPES	$ 20	00	$ 129,560	00

NEW YORK CITY DEPARTMENT OF DESIGN AND CONSTRUCTION
DIVISION OF INFRASTRUCTURE - BUREAU OF DESIGN

Contract PIN 8502019HW0004C
Project ID **GCJA03-2B**

COL. 1 ITEM NUMBER (SEQUENCE NO.)	COL. 2 ENGINEER'S ESTIMATE OF QUANTITIES	COL. 3 CLASSIFICATIONS	COL. 4 UNIT PRICES (IN FIGURES) DOLLARS	CTS	COL. 5 EXTENDED AMOUNTS (IN FIGURES) DOLLARS	CTS
4.18 A (025)	12.0 EACH	MAINTENANCE TREE PRUNING (UNDER 12" CAL.)	$ 200	00	$ 2400	00
4.18 B (026)	16.0 EACH	MAINTENANCE TREE PRUNING (12" TO UNDER 18" CAL.)	$ 250	00	$ 4000	00
4.18 C (027)	9.0 EACH	MAINTENANCE TREE PRUNING (18" TO UNDER 24" CAL.)	$ 300	00	$ 2700	00
4.18 D (028)	12.0 EACH	MAINTENANCE TREE PRUNING (24" CAL. AND OVER)	$ 400	00	$ 4800	00

01/17/2019
8:14AM
BID PAGES

NEW YORK CITY DEPARTMENT OF DESIGN AND CONSTRUCTION
DIVISION OF INFRASTRUCTURE - BUREAU OF DESIGN

Contract PIN 8502019HW0004C
Project ID GCJA03-2B

COL. 1 ITEM NUMBER (SEQUENCE NO.)	COL. 2 ENGINEER'S ESTIMATE OF QUANTITIES	COL. 3 CLASSIFICATIONS	COL. 4 UNIT PRICES (IN FIGURES) DOLLARS	CTS	COL. 5 EXTENDED AMOUNTS (IN FIGURES) DOLLARS	CTS
4.19 (029)	115.0 S.Y.	SODDING	$ 40	00	$ 4600	00
4.20 (030)	115.0 S.Y.	SEEDING	$ 40	00	$ 4600	00
4.21 (031)	496.0 P/HR	TREE CONSULTANT	$ 72	00	$ 35,712	00
6.01 AC (032)	200.0 S.Y.	CLEARING AND GRUBBING	$ 12	00	$ 2400	00

NEW YORK CITY DEPARTMENT OF DESIGN AND CONSTRUCTION
DIVISION OF INFRASTRUCTURE - BUREAU OF DESIGN

Contract PIN 8502019HW0004C
Project ID **GCJA03-2B**

COL. 1 ITEM NUMBER (SEQUENCE NO.)	COL. 2 ENGINEER'S ESTIMATE OF QUANTITIES	COL. 3 CLASSIFICATIONS	COL. 4 UNIT PRICES (IN FIGURES) DOLLARS	CTS	COL. 5 EXTENDED AMOUNTS (IN FIGURES) DOLLARS	CTS
6.02 PA (033)	452.0 C.Y.	PNEUMATIC EXCAVATION AROUND TREES	$ 150	00	$ 67,800	00
6.02 PB (034)	452.0 C.Y.	BACKFILLING AROUND TREES	$ 150	00	$ 67,800	00
6.22 F (035)	1,096.0 LBS.	ADDITIONAL HARDWARE	$ 10	00	$ 10,960	00
6.29 PTM (036)	15.0 EACH	PERMANENT TUBULAR MARKERS	$ 170	00	$ 2,550	00

NEW YORK CITY DEPARTMENT OF DESIGN AND CONSTRUCTION
DIVISION OF INFRASTRUCTURE - BUREAU OF DESIGN

Contract PIN 8502019HW0004C
Project ID **GCJA03-2B**

COL. 1 ITEM NUMBER (SEQUENCE NO.)	COL. 2 ENGINEER'S ESTIMATE OF QUANTITIES	COL. 3 CLASSIFICATIONS	COL. 4 UNIT PRICES (IN FIGURES) DOLLARS	CTS	COL. 5 EXTENDED AMOUNTS (IN FIGURES) DOLLARS	CTS
6.36 DR (037)	143.0 C.Y.	STRUCTURAL REPAIR AND ADJUSTMENT OF UTILITY STRUCTURES	$ 500	00	$ 71,500	00
6.40 D (038)	24.0 MONTH	ENGINEER'S FIELD OFFICE (TYPE D)	$ 6,000	00	$ 144,000	00
6.44 (039)	439.0 L.F.	THERMOPLASTIC REFLECTORIZED PAVEMENT MARKINGS (4" WIDE)	$ 14	00	$ 6,146	00
6.52 CG (040)	2,192.0 P/HR	CROSSING GUARD **Unit price bid shall not be less than: $ 30.00**	$ 40	00	$ 87,680	00

NEW YORK CITY DEPARTMENT OF DESIGN AND CONSTRUCTION
DIVISION OF INFRASTRUCTURE - BUREAU OF DESIGN

Contract PIN 8502019HW0004C
Project ID **GCJA03-2B**

COL. 1 ITEM NUMBER (SEQUENCE NO.)	COL. 2 ENGINEER'S ESTIMATE OF QUANTITIES	COL. 3 CLASSIFICATIONS	COL. 4 UNIT PRICES (IN FIGURES) DOLLARS	CTS	COL. 5 EXTENDED AMOUNTS (IN FIGURES) DOLLARS	CTS
6.82 A (041)	12.0 S.F.	REMOVING EXISTING TRAFFIC AND STREET NAME SIGNS	$ 150	00	$ 1,800	00
6.82 B (042)	12.0 L.F.	REMOVING EXISTING TRAFFIC AND STREET NAME SIGN POSTS	$ 130	00	$ 1,560	00
7.16 D (043)	406.0 C.Y.	TEST PITS	$ 300	00	$ 121,800	00
8.02 AB-S (044)	87,313.0 S.F.	SPECIAL CARE EXCAVATION AND RESTORATION FOR CURB AND SIDEWALK WORK	$ 1	00	$ 87,313	00

NEW YORK CITY DEPARTMENT OF DESIGN AND CONSTRUCTION
DIVISION OF INFRASTRUCTURE - BUREAU OF DESIGN

Contract PIN 8502019HW0004C
Project ID GCJA03-2B

COL. 1 ITEM NUMBER (SEQUENCE NO.)	COL. 2 ENGINEER'S ESTIMATE OF QUANTITIES	COL. 3 CLASSIFICATIONS	COL. 4 UNIT PRICES (IN FIGURES) DOLLARS	CTS	COL. 5 EXTENDED AMOUNTS (IN FIGURES) DOLLARS	CTS
GI-2.06 (045)	6,573.0 L.F.	L-SHAPED EDGING	$ 30	00	$ 197,190	00
GI-2.07C (046)	308.0 C.Y.	1-1/2" CLEAN OPEN GRADED STONE	$ 220	00	$ 67,760	00
GI-2.07D (047)	3,948.0 C.Y.	3"-4" CLEAN OPEN GRADED STONE	$ 210	00	$ 829,080	00
GI-2.08 (048)	6,634.0 S.F.	HDPE BARRIER	$ 14	00	$ 92,876	00

NEW YORK CITY DEPARTMENT OF DESIGN AND CONSTRUCTION
DIVISION OF INFRASTRUCTURE - BUREAU OF DESIGN

Contract PIN 8502019HW0004C
Project ID **GCJA03-2B**

COL. 1 ITEM NUMBER (SEQUENCE NO.)	COL. 2 ENGINEER'S ESTIMATE OF QUANTITIES	COL. 3 CLASSIFICATIONS	COL. 4 UNIT PRICES (IN FIGURES) DOLLARS	CTS	COL. 5 EXTENDED AMOUNTS (IN FIGURES) DOLLARS	CTS
GI-2.08 L (049)	7,604.0 S.F.	IMPERMEABLE LINER	$ 14	00	$ 106,456	00
GI-2.09DR-NW (050)	18,893.0 S.Y.	NON-WOVEN GEOTEXTILE FABRIC FOR DRAINAGE	$ 5	00	$ 94,465	00
GI-2.10B (051)	10,146.0 L.F.	STEEL TREE PIT GUARDS - TYPE 'B	$ 90	00	$ 913,140	00
GI-2.13A (052)	1,450.0 C.Y.	ENGINEERED SOIL AND SAND	$ 260	00	$ 377,000	00

01/17/2019
8:14AM
BID PAGES

NEW YORK CITY DEPARTMENT OF DESIGN AND CONSTRUCTION
DIVISION OF INFRASTRUCTURE - BUREAU OF DESIGN

Contract PIN 8502019HW0004C
Project ID **GCJA03-2B**

COL. 1 ITEM NUMBER (SEQUENCE NO.)	COL. 2 ENGINEER'S ESTIMATE OF QUANTITIES	COL. 3 CLASSIFICATIONS	COL. 4 UNIT PRICES (IN FIGURES) DOLLARS	CTS	COL. 5 EXTENDED AMOUNTS (IN FIGURES) DOLLARS	CTS
GI-2.16 HPA (053)	2,605.0 L.F.	HALF PERFORATED HDPE PIPE (8" DIA.)	$ 80	00	$ 208,400	00
GI-2.16P (054)	1,075.0 L.F.	PERFORATED HDPE PIPE (6" DIA.)	$ 80	00	$ 86,000	00
GI-2.16S (055)	170.0 L.F.	SOLID HDPE PIPE (6" DIA.)	$ 80	00	$ 13,600	00
GI-2.16SA (056)	273.0 L.F.	SOLID HDPE PIPE (8" DIA.)	$ 80	00	$ 21,840	00

NEW YORK CITY DEPARTMENT OF DESIGN AND CONSTRUCTION
DIVISION OF INFRASTRUCTURE - BUREAU OF DESIGN

Contract PIN 8502019HW0004C
Project ID **GCJA03-2B**

COL. 1 ITEM NUMBER (SEQUENCE NO.)	COL. 2 ENGINEER'S ESTIMATE OF QUANTITIES	COL. 3 CLASSIFICATIONS	COL. 4 UNIT PRICES (IN FIGURES) DOLLARS	CTS	COL. 5 EXTENDED AMOUNTS (IN FIGURES) DOLLARS	CTS
GI-2.17 A (057)	1,050.0 C.Y.	GABION (WITH CLEAN OPEN GRADED STONE)	$ 440	00	$ 462,000	00
GI-2.19 (058)	141.0 L.F.	HDPE STORM WATER CHAMBER	$ 150	00	$ 21,150	00
GI-4.06 A (059)	4,948.0 S.F.	REINFORCED CONCRETE APRON	$ 150	00	$ 742,200	00
GI-4.06 CC-A (060)	97.0 EACH	CONCRETE CHAMBER (TRENCH) AT INLET	$ 8,000	00	$ 776,000	00

NEW YORK CITY DEPARTMENT OF DESIGN AND CONSTRUCTION
DIVISION OF INFRASTRUCTURE - BUREAU OF DESIGN

Contract PIN 8502019HW0004C
Project ID **GCJA03-2B**

COL. 1 ITEM NUMBER (SEQUENCE NO.)	COL. 2 ENGINEER'S ESTIMATE OF QUANTITIES	COL. 3 CLASSIFICATIONS	COL. 4 UNIT PRICES (IN FIGURES) DOLLARS	CTS	COL. 5 EXTENDED AMOUNTS (IN FIGURES) DOLLARS	CTS
GI-4.06 CC-B (061)	97.0 EACH	CONCRETE CHAMBER (TRENCH) AT OUTLET	$ 8,000	00	$ 776,000	00
GI-4.06 CG (062)	3,716.0 L.F.	REINFORCED CONCRETE GUTTER	$ 50	00	$ 185,800	00
GI-4.06 CS (063)	4,626.0 L.F.	CONCRETE STRIP	$ 50	00	$ 231,300	00
GI-4.06 CU (064)	45.0 L.F.	REINFORCED CONCRETE CULVERT AND COVER	$ 360	00	$ 16,200	00

NEW YORK CITY DEPARTMENT OF DESIGN AND CONSTRUCTION
DIVISION OF INFRASTRUCTURE - BUREAU OF DESIGN

Contract PIN 8502019HW0004C
Project ID **GCJA03-2B**

COL. 1 ITEM NUMBER (SEQUENCE NO.)	COL. 2 ENGINEER'S ESTIMATE OF QUANTITIES	COL. 3 CLASSIFICATIONS	COL. 4 UNIT PRICES (IN FIGURES) DOLLARS	CTS	COL. 5 EXTENDED AMOUNTS (IN FIGURES) DOLLARS	CTS
GI-4.06 SP (065)	2,052.0 L.F.	CONCRETE SEDIMENT PAD	$ 60	00	$ 123,120	00
GI-4.06CO (066)	120.0 L.F.	CONCRETE WALKWAY AND FOOTER FOR HYDRAULICALLY CONNECTED GREEN INFRASTRUCTURE PRACTICES	$ 300	00	$ 36,000	00
GI-4.06CT (067)	6,874.0 S.F.	5 INCH THICK CONCRETE TOP	$ 20	00	$ 137,480	00
GI-4.20 (068)	3,660.0 S.Y.	INTERIM COVER CROP	$ 5	00	$ 18,300	00

NEW YORK CITY DEPARTMENT OF DESIGN AND CONSTRUCTION
DIVISION OF INFRASTRUCTURE - BUREAU OF DESIGN

Contract PIN 8502019HW0004C
Project ID **GCJA03-2B**

COL. 1 ITEM NUMBER (SEQUENCE NO.)	COL. 2 ENGINEER'S ESTIMATE OF QUANTITIES	COL. 3 CLASSIFICATIONS	COL. 4 UNIT PRICES (IN FIGURES) DOLLARS	CTS	COL. 5 EXTENDED AMOUNTS (IN FIGURES) DOLLARS	CTS
GI-5.10 (069)	387.0 V.F.	STONE COLUMN	$ 450	00	$ 174,150	00
GI-5.35 (070)	3,589.0 L.F.	SLEEVE FOR UTILITY CROSSINGS	$ 100	00	$ 358,900	00
GI-6.09T1 (071)	13,192.0 L.F.	CONCRETE HEADER, TRAPEZOID-SHAPE (6" WIDE AT TOP X 15" DEEP X 9" WIDE AT BASE)	$ 50	00	$ 659,600	00
GI-6.09T2 (072)	425.0 L.F.	CONCRETE HEADER, TRAPEZOID-SHAPE (6" WIDE AT TOP X 19" DEEP X 9" WIDE AT BASE)	$ 60	00	$ 25,500	00

NEW YORK CITY DEPARTMENT OF DESIGN AND CONSTRUCTION
DIVISION OF INFRASTRUCTURE - BUREAU OF DESIGN

Contract PIN 8502019HW0004C
Project ID **GCJA03-2B**

COL. 1 ITEM NUMBER (SEQUENCE NO.)	COL. 2 ENGINEER'S ESTIMATE OF QUANTITIES	COL. 3 CLASSIFICATIONS	COL. 4 UNIT PRICES (IN FIGURES) DOLLARS	CTS	COL. 5 EXTENDED AMOUNTS (IN FIGURES) DOLLARS	CTS
GI-6.46 (073)	5.0 C.Y.	EPOXY BONDED STONE STRIP BED	$ 1120	00	$ 5,600	00
GI-6.51 (074)	348.0 C.Y.	PAVEMENT KEY ALONG CURB	$ 160	00	$ 55,680	00
GI-6.70 (075)	548.0 EACH	MAINTENANCE AND PROTECTION OF TRAFFIC	$ 2600	00	$ 1,424,800	00
GI-7.01SGF (076)	2,230.0 S.F.	STEEL GRATE AND FRAME	$ 150	00	$ 334,500	00

NEW YORK CITY DEPARTMENT OF DESIGN AND CONSTRUCTION
DIVISION OF INFRASTRUCTURE - BUREAU OF DESIGN

Contract PIN 8502019HW0004C
Project ID **GCJA03-2B**

COL. 1 ITEM NUMBER (SEQUENCE NO.)	COL. 2 ENGINEER'S ESTIMATE OF QUANTITIES	COL. 3 CLASSIFICATIONS	COL. 4 UNIT PRICES (IN FIGURES) DOLLARS	CTS	COL. 5 EXTENDED AMOUNTS (IN FIGURES) DOLLARS	CTS
GI-7.01SPC (077)	575.0 S.F.	STEEL PLATE CURB COVER	$ 250	00	$ 143,750	00
GI-7.13E (078)	548.0 EACH	MAINTENANCE OF GI SITE	$ 1100	00	$ 602,800	00
GI-8.20 (079)	2,602.0 S.Y.	JUTE MESH	$ 30	00	$ 78,060	00
P-1 (080)	548.0 SETS	PHOTO DOCUMENTATION	$ 230	00	$ 126,040	00

NEW YORK CITY DEPARTMENT OF DESIGN AND CONSTRUCTION
DIVISION OF INFRASTRUCTURE - BUREAU OF DESIGN

Contract PIN 8502019HW0004C
Project ID **GCJA03-2B**

COL. 1 ITEM NUMBER (SEQUENCE NO.)	COL. 2 ENGINEER'S ESTIMATE OF QUANTITIES	COL. 3 CLASSIFICATIONS	COL. 4 UNIT PRICES (IN FIGURES) DOLLARS	COL. 4 CTS	COL. 5 EXTENDED AMOUNTS (IN FIGURES) DOLLARS	COL. 5 CTS
UTL-6.03 (081)	2,100.0 L.F.	REMOVAL OF ABANDONED GAS FACILITIES. ALL SIZES. (S6.03) **Unit price bid shall not be less than: $ 15.00**	$ 15	00	$ 31,500	00
UTL-6.03.1 (082)	800.0 L.F.	REMOVAL OF ABANDONED GAS FACILITIES WITH POSSIBLE COAL TAR WRAP. ALL SIZES. (FOR NATIONAL GRID WORK ONLY) (S6.03) **Unit price bid shall not be less than: $ 25.00**	$ 25	00	$ 20,000	00
UTL-6.04 (083)	240.0 EACH	ADJUST HARDWARE TO GRADE USING SPACER RINGS/ADAPTORS. (STREET REPAVING.) (S6.04) **Unit price bid shall not be less than: $ 35.00**	$ 35	00	$ 8,400	00
UTL-6.05 (084)	250.0 EACH	ADJUST HARDWARE TO GRADE BY RESETTING. (ROAD RECONSTRUCTION.) (S6.05) **Unit price bid shall not be less than: $ 65.00**	$ 65	00	$ 16,250	00

NEW YORK CITY DEPARTMENT OF DESIGN AND CONSTRUCTION
DIVISION OF INFRASTRUCTURE - BUREAU OF DESIGN

Contract PIN 8502019HW0004C
Project ID **GCJA03-2B**

COL. 1 ITEM NUMBER (SEQUENCE NO.)	COL. 2 ENGINEER'S ESTIMATE OF QUANTITIES	COL. 3 CLASSIFICATIONS	COL. 4 UNIT PRICES (IN FIGURES) DOLLARS	CTS	COL. 5 EXTENDED AMOUNTS (IN FIGURES) DOLLARS	CTS
UTL-6.06 (085)	4,500.0 C.Y.	SPECIAL CARE EXCAVATION AND BACKFILLING (S6.06) **Unit price bid shall not be less than: $ 180.00**	$ 180	00	$ 810,000	00
UTL-6.07 (086)	300.0 C.Y.	TEST PITS FOR GAS FACILITIES (S6.07) **Unit price bid shall not be less than: $ 100.00**	$ 100	00	$ 30,000	00
UTL-GCS-2WS (087)	1.0 F.S.	GAS INTERFERENCES AND ACCOMMODATIONS **PRICE BID SHALL BE FOR THE FIXED SUM OF $ 70,000.00**	$ 70,000	00	$ 70,000	00

NEW YORK CITY DEPARTMENT OF DESIGN AND CONSTRUCTION
DIVISION OF INFRASTRUCTURE - BUREAU OF DESIGN

Contract PIN 8502019HW0004C
Project ID **GCJA03-2B**

COL. 1 ITEM NUMBER (SEQUENCE NO.)	COL. 2 ENGINEER'S ESTIMATE OF QUANTITIES	COL. 3 CLASSIFICATIONS	COL. 4 UNIT PRICES (IN FIGURES) DOLLARS / CTS	COL. 5 EXTENDED AMOUNTS (IN FIGURES) DOLLARS / CTS
		SUB-TOTAL:		$ 18,393,370 00
6.39 A (088)	1.0 **LUMP SUM**	MOBILIZATION PRICE BID SHALL NOT EXCEED 4% OF THE ABOVE SUB-TOTAL PRICE.		$ 730,000 00
		TOTAL BID PRICE:		$ 19,123,370 00

PLEASE BE SURE A LEGIBLE BID IS ENTERED FOR EACH ITEM.

THE BIDDER SHALL INSERT THE TOTAL BID PRICE IN THE BID FORM ON PAGE C-4 OF THIS BID BOOKLET.

BID FORM
THE CITY OF NEW YORK
DEPARTMENT OF DESIGN AND CONSTRUCTION
DIVISION OF INFRASTRUCTURE

BID FOR FURNISHING ALL LABOR AND MATERIAL NECESSARY AND REQUIRED FOR:

PROJECT ID: GCJAO3-2B

CONSTRUCTION OF RIGHT-OF-WAY GREEN INFRASTRUCTURE IN THE CSO TRIBUTARY AREAS JAM-003 AND JAM-003A

Together With All Work Incidental Thereto
BOROUGH OF QUEENS
CITY OF NEW YORK

Name of Bidder: PCI Industries, Corp.

Date of Bid Opening: 4/1/19

Bidder is: (Check one, whichever applies) Individual ( ) Partnership ( ) Corporation (X)

Place of Business of Bidder: 550 Franklin Avenue, Mt. Vernon, NY 10550

Bidder's Telephone Number: 914.665.4700 Fax Number: 914.668.2328

Bidder's E-Mail Address: davidson@pcicorp.org

Residence of Bidder (If Individual): —

If Bidder is a Partnership, fill in the following blanks:

Names of Partners	Residence of Partners

If Bidder is a Corporation, fill in the following blanks:
Organized under the laws of the State of New York

Name and Home Address of President: Richard Perrino, Yonkers, NY

Name and Home Address of Secretary:

Name and Home Address of Treasurer:

BID FORM

The above-named Bidder affirms and declares:

1. The said bidder is of lawful age and the only one interested in this bid; and no person, firm or corporation other than hereinbefore named has any interest in this bid, or in the Contract proposed to be taken.

2. By submission of this bid, each bidder and each person signing on behalf of any bidder certifies, and in the case of a joint bid each party thereto certifies as to its own organization, under penalty of perjury, that to the best of its knowledge and belief: (1) the prices in this bid have been arrived at independently without collusion, consultation, communication or agreement, for the purpose of restricting competition, as to any matter relating to such prices with any other bidder or with any competitor; (2) unless otherwise required by law, the prices quoted in this bid have not been knowingly disclosed by the bidder and will not knowingly be disclosed by the bidder prior to opening, directly or indirectly, to any other bidder or to any competitor; and (3) No attempt has been made or will be made by the bidder to induce any other person, partnership or corporation to submit or not to submit a bid for the purpose of restricting competition.

3. No councilman or other officer or employee or person whose salary is payable in whole or in part from the City Treasury is directly or indirectly interested in this bid, or in the supplies, materials, equipment, work or labor to which it relates, or in any of the profits thereof.

4. The bidder is not in arrears to the City of New York upon debt or contract or taxes, and is not a defaulter, as surety or otherwise, upon any obligation of the City of New York, and has not been declared not responsible, or disqualified, by any agency of the City of New York or State of New York, nor is there any proceeding pending relating to the responsibility or qualification of the bidder to receive public contracts except as set forth on the Affirmation included as page C-6 of this Bid Booklet.

The bidder hereby affirms that it has paid all applicable City income, excise and other taxes for all years it has conducted business activities in New York City.

5. The bidder, as an individual, or as a member, partner, director or officer of the bidder, if the same be a firm, partnership or corporation, executes this document expressly warranting and representing that should this bid be accepted by the City and the Contract awarded to him, he and his subcontractors engaged in the performance: (1) will comply with the provisions of Section 6-108 of the Administrative Code of the City of New York and the non-discrimination provisions of Section 220a of the New York State Labor Law, as more expressly and in detail set forth in the Agreement; (2) will comply with Section 6-109 of the Administrative Code of the City of New York in relation to minimum wages and other stipulations as more expressly and in detail set forth in the Agreement; (3) have complied with the provisions of the aforesaid laws since their respective effective dates, and (4) will post notices to be furnished by the City, setting forth the requirements of the aforesaid laws in prominent and conspicuous places in each and every plant, factory, building and structure where employees engaged in the performance of the Contract can readily view it, and will continue to keep such notices posted until the supplies, materials and equipment, or work labor and services required to be furnished or rendered by the Contractor have been finally accepted by the City. In the event of any breach or violation of the foregoing, the Contractor may be subject to damages, liquidated or otherwise, cancellation of the Contract and suspension as a bidder for a period of three years. (The words, "the bidder", "he", "his", and "him" where used herein MUST mean the individual bidder, firm, partnership or corporation executing this bid).

6. Compliance Report

The bidder, as an individual, or as a member, partner, director, or officer of the bidder, if the same be a firm, partnership, or corporation, (1) represents that his attention has been specifically drawn to Executive Order No. 50, dated, April 25, 1980, on Equal Employment Compliance of the contract, and (2) warrants that he will comply with the provisions of Executive Order No. 50. The Employment Report must be submitted as part of the bid.

The bidder, as an individual, or as a member, partner, director, or officer of the bidder, if the same be a firm, partnership, or corporation, executes this document expressly warranting that he will comply with: (1) the provision of the contract on providing records, Chapter 8.

7. By submission of this bid, the bidder certifies that it now has and will continue to have the financial capability to fully perform the work required for this contract. Any award of this contract will be made in reliance upon such certification. Upon request therefor, the bidder will submit written verification of such financial capability in a form that is acceptable to the department.

8. In accordance with Section 165 of the State Finance Law, the bidder agrees that tropical hardwoods, as defined in Section 165 of the State Finance Law, MUST not be utilized in the performance of this Contract, except as the same are permitted by the foregoing provision of law.

9. The bidder has visited and examined the site of the work and has carefully examined the Contract in the form approved by the Corporation Counsel, and will execute the Contract and perform all its items, covenants and conditions, and will provide, furnish and deliver all the work, materials, supplies, tools and appliances for all labor and materials necessary or required for the hereinafter named work, all in strict conformity with the Contract, for the prices set forth in the Bid Schedule:

10. M/WBE UTILIZATION PLAN: By signing its bid, the bidder agrees to the Vendor Certification and Required Affirmations set forth below, unless a full waiver of the Participation Goals is granted. The Vendor Certification and Required Affirmations will be deemed to satisfy the requirement to complete Section V of Part II of Schedule B: M/WBE Utilization Plan.

Section V: Vendor Certification and Required Affirmations:

I hereby:

1) acknowledge my understanding of the M/WBE participation requirements as set forth in this Contract and the pertinent provisions of Section 6-129 of the Administrative Code of the City of New York and the rules promulgated thereunder;
2) affirm that the information supplied in support of the M/WBE Utilization Plan is true and correct;
3) agree, if awarded this Contract, to comply with the M/WBE participation requirements of this Contract, the pertinent provisions of Section 6-129, and the rules promulgated thereunder, all of which MUST be deemed to be material terms of this Contract;
4) agree and affirm that it is a material term of this Contract that the Vendor will award the total dollar value of the M/WBE Participation Goals to certified MBEs and/or WBEs, unless a full waiver is obtained or such goals are modified by the Agency; and
5) agree and affirm, if awarded this Contract, to make all reasonable, good faith efforts to meet the M/WBE Participation Goals, or If a partial waiver is obtained or such goals are modified by the Agency, to meet the modified Participation Goals by soliciting and obtaining the participation of certified MBE and/or WBE firms.

(NO TEXT ON THIS PAGE)

BID FORM

PROJECT ID. : GCJA03-2B

TOTAL BID PRICE: In the space provided below, the Bidder MUST indicate its Total Bid Price in figures. Such Total Bid Price is set forth on the final page of the Bid Schedule.

TOTAL BID PRICE:
(a/k/a BID PROPOSAL)

$ 19,123,370.00

FBB 4/1/19

BIDDER'S SIGNATURE AND AFFIDAVIT

Bidder: P.C.I. Industries Corp

By: _____
(Signature of Partner or corporate officer)

Richard Persico, President & Sole Officer

Attest: ~~Secretary of Corporate Bidder~~
(Corporate Seal)

Affidavit on the following page should be subscribed
and sworn to before a Notary Public

BID FORM (TO BE NOTARIZED)

AFFIDAVIT WHERE BIDDER IS AN INDIVIDUAL

STATE OF NEW YORK, COUNTY OF_____ ss:

_____ being duly sworn says:

I am the person described in and who executed the foregoing bid, and the several matters therein stated are in all respects true.

_____

(Signature of the person who signed the Bid)

Subscribed and sworn to before me this

_____ day of_____, _____

_____

Notary Public

AFFIDAVIT WHERE BIDDER IS A PARTNERSHIP

STATE OF NEW YORK, COUNTY OF_____ ss:

_____ being duly sworn says:

I am a member of _____ the firm described in and which executed the foregoing bid. I subscribed the name of the firm thereto on behalf of the firm, and the several matters therein stated are in all respects true.

_____

(Signature of Partner who signed the Bid)

Subscribed and sworn to before me this

_____ day of_____, _____

_____

Notary Public

AFFIDAVIT WHERE BIDDER IS A CORPORATION

STATE OF NEW YORK, COUNTY OF Westchester ss:

Richard Persico being duly sworn says:

I am the President a Sole Officer of the above named corporation whose name is subscribed to and which executed the foregoing bid. I reside at Yonkers, NY.

I have knowledge of the several matters therein stated, and they are in all respects true.

_____

(Signature of Corporate Officer who signed the Bid)

Subscribed and sworn to before me this

1st day of April, 2019

_____

Notary Public

STACEY A. BOX
NOTARY PUBLIC-STATE OF NEW YORK
No. 01BO5081711
Qualified in New York County
My Commission Expires 07-07-2019

AFFIRMATION

PROJECT ID. GCJA03-2B

The undersigned bidder affirms and declares that said bidder is not in arrears to the City of New York upon debt, contract or taxes and is not a defaulter, as surety or otherwise, upon obligation to the City of New York, and has not been declared not responsible, or disqualified, by any agency of the City of New York, nor is there any proceeding pending relating to the responsibility or qualification of the bidder to receive public contracts except: None

(If none, the bidder MUST insert the word "None" in the space provided above.)

Full Name of Bidder: PCI Industries Corp.
Address: 550 Franklin Avenue
City Mt. Vernon State New York Zip Code 10550

CHECK ONE BOX AND INCLUDE APPROPRIATE NUMBER:

/__/ A - Individual or Sole Proprietorship*
SOCIAL SECURITY NUMBER

B - Partnership, Joint Venture or other unincorporated organization
/__/ EMPLOYER IDENTIFICATION NUMBER

/✓/ C- Corporation
EMPLOYER IDENTIFICATION NUMBER
20-4530527

By: _____
Signature

Title: President & Sole Officer

If a corporation, place seal here

This affirmation must be signed by an officer or duly authorized representative.

*Under the Federal Privacy Act the furnishing of Social Security Numbers by bidders on City contracts is voluntary. Failure to provide a Social Security Number will not result in a bidder's disqualification. Social Security Numbers will be used to identify bidders, proposers or vendors to ensure their compliance with laws, to assist the City in enforcement of laws, as well as to provide the City a means of identifying of businesses which seek City contracts.

BID BOND 1
FORM OF BID BOND

KNOW ALL MEN BY THESE PRESENTS. That we, PCI Industries, Corp.
550 Franklin Avenue
Mount Vernon, NY 10550

hereinafter referred to as the "Principal", and Everest Reinsurance Company
P.O. Box 830
Liberty Corner, NJ 07938

hereinafter referred to as the "Surety" are held and firmly bound to THE CITY OF NEW YORK, hereinafter referred to as the "CITY", or to its successors and assigns in the penal sum of Ten Percent of Proposal Price ($ 10% of P.P.), Dollars lawful money of the United States, for the payment of which said sum of money well and truly to be made, we, and each of us, bind ourselves, our heirs, executors, administrators, successors and assigns, jointly and severally, firmly by these presents.

Whereas, the Principal is about to submit (or has submitted) to the City the accompanying proposal, hereby made a part hereof, to enter into a contract in writing for Project ID: GCJA03-2B PIN: 8502019HW0004C Construction of Right-Of-Way Green Infrastructure in the CSO Tributary Areas JAM-003 and JAM-003A

NOW, THEREFORE, the conditions of this obligation are such that if the Principal MUST not withdraw said Proposal without the consent of the City for a period of forty-five (45) days after the opening of bids and in the event of acceptance of the Principal's Proposal by the City, if the Principal MUST:

(a) Within ten (10) days after notification by the City, execute in quadruplicate and deliver to the City all the executed counterparts of the Contract in the form set forth in the Contract Documents, in accordance with the proposal as accepted, and

(b) Furnish a performance bond and separate payment bond, as may be required by the City, for the faithful performance and proper fulfillment of such Contract, which bonds MUST be satisfactory in all respects to the City and MUST be executed by good and sufficient sureties, and

(c) In all respects perform the agreement created by the acceptance of said Proposal as provided in the Information for Bidders, bound herewith and made a part hereof, or if the City MUST reject the aforesaid Proposal, then this obligation MUST be null and void; otherwise to remain in full force and effect.

BID BOND 2

In the event that the Proposal of the Principal MUST be accepted and the Contract be awarded to him the Surety hereunder agrees subject only to the payment by the Principal of the premium therefore, if requested by the City, to write the aforementioned performance and payment bonds in the form set forth in the Contract Documents.

It is expressly understood and agreed that the liability of the Surety for any and all claims hereunder MUST in no event exceed the penal amount of this obligation as herein stated.

There MUST be no liability under this bond if, in the event of the acceptance of the Principal's Proposal by the City, either a performance bond or payment bond, or both, MUST not be required by the City on or before the 30th day after the date on which the City signs the Contract.

The surety, for the value received, hereby stipulates and agrees that the obligations of the Surety and its bond MUST in no way be impaired or affected by any postponements of the date upon which the City will receive or open bids, or by any extensions of the time within which the City may accept the Principal's Proposal, or by any waiver by the City of any of the requirements of the Information for Bidders, and the Surety hereby waives notice of any such postponements, extensions, or waivers.

IN WITNESS WHEREOF, the Principal and the Surety have hereunto set their hands and seals and such of them as are corporations have caused their corporate seals to be hereto affixed and these presents to be signed by their proper officers the 26th day of March, 2019.

(Seal)

PCI Industries, Corp. (L.S.)
Principal

By: _____

(Seal)

Everest Reinsurance Company
Surety

By: _____
Colette R. Chisholm, Attorney-In-Fact

BID BOND 3

ACKNOWLEDGMENT OF PRINCIPAL, IF A CORPORATION

State of New York County of Westchester ss:
On this 28 day of March, 2019, before me personally came
Richard Persico to me known, who, being by me duly sworn, did depose and say
that he resides at Yonkers
that he is the President of PCI Industries Corp
the corporation described in and which executed the foregoing instrument; that he knows the seal of said corporation; that one of the seals affixed to said instrument is such seal; that it was so affixed by order of the directors of said corporation, and that he signed his name thereto by like order.

TRACEY A. BOX
NOTARY PUBLIC-STATE OF NEW YORK
No. 01BO5081711
Qualified in New York County
My Commission Expires 07-07-2019

Tracey A. Box
Notary Public

ACKNOWLEDGMENT OF PRINCIPAL, IF A PARTNERSHIP

State of _____ County of _____ ss:
On this _____ day of _____, _____, before me personally appeared
_____ to me known and known to me to be one of the members of the
firm of _____ described in and who executed the foregoing instrument, and he acknowledged to me that he executed the same as and for the act and deed of said firm.

_____
Notary Public

ACKNOWLEDGMENT OF PRINCIPAL, IF AN INDIVIDUAL

State of _____ County of _____ ss:
On this _____ day of _____, _____, before me personally appeared
_____ to me known and known to me to be the person described in and who executed the foregoing instrument and acknowledged that he executed the same.

_____
Notary Public

AFFIX ACKNOWLEDGMENTS AND JUSTIFICATION OF SURETIES

ACKNOWLEDGMENT OF SURETY COMPANY

STATE OF New York }

COUNTY OF Nassau }

On this March 26, 2019, before me personally came Colette R. Chisholm to me known, who, being by me duly sworn, did depose and say; that he/she resides in New York County, State of New York that he/she is the Attorney-In-Fact of the Everest Reinsurance Company the corporation described in which executed the above instrument; that he/she knows the seal of said corporation; that the seal affixed to said instrument is such corporate seal; that is was so affixed by the Board of Directors of said corporation; and that he/she signed his/her name thereto by like order; and the affiant did further depose and say that the Superintendent of Insurance of the State of New York, has pursuant to Section 1111 of the Insurance Law of the State of New York, issued to Everest Reinsurance Company (Surety) his/her certificate of qualification evidencing the qualification of said Company and its sufficiency under any law of the State of New York as surety and guarantor, and the propriety of accepting and approving is as such; and that such certificate has not been revoked.

Notary Public

NY acknowledgement

LAURA MARIE MARINO
Notary Public-State of New York
No. 01MA6388129
Qualified in Nassau County
Commission Expires 03/04/2023

UNAUTHORIZED COPY

EVEREST

ES007R12180

POWER OF ATTORNEY
EVEREST REINSURANCE COMPANY
DELAWARE

KNOW ALL PERSONS BY THESE PRESENTS: That Everest Reinsurance Company, a corporation of the State of Delaware ("Company") having its principal office located at 477 Martinsville Road, Liberty Corner, New Jersey 07938, do hereby nominate, constitute, and appoint:

Desiree Cardin, Colette R. Chisholm, Candice Maitland, George O. Brewster, Gerard S. Macholz, Nelly Ranchhvich, Rita Segistano, Thomas Bean, Robert T. Pearson, Susan Lupski, Dana Granice, Michelle Wannamaker, Katherine Acosta

its true and lawful Attorney(s)-in-fact to make, execute, attest, seal and deliver for and on its behalf, as surety, and as its act and deed, where required, any and all bonds and undertakings in the nature thereof, for the penal sum of no one of which is in any event to exceed UNLIMITED, reserving for itself the full power of substitution and revocation.

Such bonds and undertakings, when duly executed by the aforesaid Attorney(s)-in-fact shall be binding upon the Company as fully and to the same extent as if such bonds and undertakings were signed by the President and Secretary of the Company and sealed with its corporate seal.

This Power of Attorney is granted and is signed by facsimile under and by the authority of the following Resolutions adopted by the Board of Directors of Company ("Board") on the 28th day of July 2016:

RESOLVED, that the President, any Executive Vice President, and any Senior Vice President and Anthony Romano are hereby appointed by the Board as authorized to make, execute, seal and deliver for and on behalf of the Company, any and all bonds, undertakings, contracts or obligations in surety or co-surety with others and that the Secretary or any Assistant Secretary of the Company be and that each of them hereby is authorized to attest to the execution of any such bonds, undertakings, contracts or obligations in surety or co-surety and attach thereto the corporate seal of the Company.

RESOLVED, FURTHER, that the President, any Executive Vice President, and any Senior Vice President and Anthony Romano are hereby authorized to execute powers of attorney qualifying the attorney named in the given power of attorney to execute, on behalf of the Company, bonds and undertakings in surety or co-surety with others, and that the Secretary or any Assistant Secretary of the Company be, and that each of them is hereby authorized to attest the execution of any such power of attorney, and to attach thereto the corporate seal of the Company.

RESOLVED, FURTHER, that the signature of such officers named in the preceding resolutions and the corporate seal of the Company may be affixed to such powers of attorney or to any certificate relating thereto by facsimile, and any such power of attorney or certificate bearing such facsimile signatures or facsimile seal shall be thereafter valid and binding upon the Company with respect to any bond, undertaking, contract or obligation in surety or co-surety with others to which it is attached.

IN WITNESS WHEREOF, Everest Reinsurance Company has caused their corporate seals to be affixed hereto, and these presents to be signed by their duly authorized officers this 28th day of July 2016.

Everest Reinsurance Company

SEAL 1973 Delaware

Attest: Nicole Chase, Assistant Secretary

By: Anthony Romano, Vice President

On this 28th day of July 2016, before me personally came Anthony Romano, known to me, who, being duly sworn, did execute the above instrument; that he knows the seal of said Company; that the seal affixed to the aforesaid instrument is such corporate seal and was affixed thereto; and that he executed said instrument by like order.

LINDA ROBINS
Notary Public, State of New York
No 01R06239736
Qualified in Queens County
Term Expires April 25, 2022

Linda Robins, Notary Public

IN WITNESS WHEREOF, I have hereunto set my hand and affixed the seal of said Company, at the Liberty Corner, this 26 day of MAR 2 6 2019 20

HEAT SENSITIVE SHIELD. FADES WITH HEAT OR TOUCH.

ES 00 01(04/08) #0454 contains a security pantograph, blue background, heat sensitive ink, coin reactive watermark, and microtext printing on border.

EVEREST REINSURANCE COMPANY
STATEMENTS OF FINANCIAL CONDITION

	December 31, 2017	December 31, 2016
ASSETS		
Bonds	$ 3,672,234,234	$ 4,758,879,245
Stocks	451,346,228	279,147,599
Short-term investments	-	133,755,171
Other invested assets	2,238,399,502	2,268,609,528
Cash and cash equivalents	243,245,188	217,717,016
Accounts receivable-premium balances	1,583,153,684	1,503,187,815
Reinsurance recoverable	612,084,447	709,386,205
Other assets	685,600,063	354,146,316
Total Assets	$ 9,486,063,346	$ 10,224,828,895
LIABILITIES		
Loss and loss adjustment expense reserve	$ 3,661,132,517	$ 4,204,956,587
Unearned premium reserve	1,310,324,727	536,374,512
Ceded reinsurance premium payable (net of ceding commission)	494,144,179	904,844,063
Reserve for commissions, taxes and other liabilities	628,609,659	943,532,424
Total Liabilities	$ 6,094,211,082	$ 6,589,707,586
SURPLUS AND OTHER FUNDS		
Common capital stock	$ 10,000,000	$ 10,000,000
Contributed Surplus	987,509,603	987,239,852
Unassigned surplus	2,394,342,661	2,637,881,457
Total capital and surplus	$ 3,391,852,264	$ 3,635,121,309
Total Liabilities and Surplus	$ 9,486,063,346	$ 10,224,828,895

Bonds and stocks are valued on a basis promulgated by the National Association of Insurance Commissioners

Margaret Horn

Signed before me by Margaret Horn this 17th day of April 2018

Lorraine N Day

LORRAINE N. DAY
NOTARY PUBLIC
STATE OF NEW JERSEY
COMMISSION # 2259023
MY COMMISSION EXPIRES AUG. 3, 2020

M/WBE PROGRAM

M/WBE UTILIZATION PLAN

M/WBE Program Requirements: The requirements for the M/WBE Program are set forth on the following pages of this Bid Booklet, in the section entitled "Notice to All Prospective Contractors".

Schedule B: M/WBE Utilization Plan: Schedule B: M/WBE Utilization Plan for this Contract is set forth in this Bid Booklet on the pages following the section entitled "Notice to All Prospective Contractors". The M/WBE Utilization Plan (Part I) indicates whether Participation Goals have been established for this Contract. If Participation Goals have been established for this Contract, the bidder must submit an M/WBE Utilization Plan (Part II) with its bid.

Waiver: The bidder may seek a full or partial pre-award waiver of the Participation Goals in accordance with the "Notice to All Prospective Contractors" (See Part A, Section 10). The bidder's request for a waiver must be submitted at least seven (7) calendar days prior to the bid date. Waiver requests submitted after the deadline will not be considered. The form for requesting a waiver of the Participation Goals is set forth in the M/WBE Utilization Plan (Part III).

Rejection of the Bid: The bidder must complete Schedule B: M/WBE Utilization Plan (Part II) set forth in this Bid Booklet on the pages following the section entitled "Notice to All Prospective Contractors". A Schedule B submitted by the bidder which does not include the Vendor Certification and Required Affirmations (See Section V of Part II) will be deemed to be non-responsive, unless a full waiver of the Participation Goals is granted (Schedule B, Part III). In the event that the City determines that the bidder has submitted a Schedule B where the Vendor Certification and Required Affirmations are completed but other aspects of the Schedule B are not complete, or contain a copy or computation error that is at odds with the Vendor Certification and Required Affirmations, the bidder will be notified by the Agency and will be given four (4) calendar days from receipt of notification to cure the specified deficiencies and return a completed Schedule B to the Agency. Failure to do so will result in a determination that the Bid is non-responsive. Receipt of notification is defined as the date notice is emailed or faxed (if the bidder has provided an email address or fax number), or no later than five (5) calendar days from the date of mailing or upon delivery, if delivered.

Impact on LBE Requirements: If Participation Goals have been established for the participation of M/WBEs, the contractor is not required to comply with the Locally Based Enterprise Program ("LBE"). The LBE Program is set forth in Article 67 of the Contract.

NOTICE TO ALL PROSPECTIVE CONTRACTORS

PARTICIPATION BY MINORITY-OWNED AND WOMEN-OWNED BUSINESS ENTERPRISES IN CITY PROCUREMENT

ARTICLE I. M/WBE PROGRAM

Local Law No. 129 of 2005 added and Local Law 1 of 2013 amended Section 6-129 of the Administrative Code of the City of New York (hereinafter "Section 6-129"). Section 6-129 establishes the program for participation in City procurement ("M/WBE Program") by minority- owned business enterprises ("MBEs") and women-owned business enterprises ("WBEs"), certified in accordance with Section 1304 of the New York City Charter. As stated in Section 6-129, the intent of the program is to address the impact of discrimination on the City's procurement process, and to promote the public interest in avoiding fraud and favoritism in the procurement process, increasing competition for City business, and lowering contract costs. The contract provisions contained herein are pursuant to Section 6-129, and the rules of the Department of Small Business Services ("DSBS") promulgated thereunder.

If this Contract is subject to the M/WBE Program established by Section 6-129, the specific requirements of MBE and/or WBE participation for this Contract are set forth in Schedule B of the Contract (entitled the "M/WBE Utilization Plan"), and are detailed below. The Contractor must comply with all applicable MBE and WBE requirements for this Contract.

All provisions of Section 6-129 are hereby incorporated in the Contract by reference and all terms used herein that are not defined herein MUST have the meanings given such terms in Section 6-129. Article I, Part A, below, sets forth provisions related to the participation goals for construction, standard and professional services contracts. Article I, Part B, below, sets forth miscellaneous provisions related to the M/WBE Program.

PART A

PARTICIPATION GOALS FOR CONSTRUCTION, STANDARD AND PROFESSIONAL SERVICES CONTRACTS OR TASK ORDERS

1. The **MBE and/or WBE Participation Goals** established for this Contract or Task Orders issued pursuant to this Contract, ("**Participation Goals**"), as applicable, are set forth on Schedule B, Part I to this Contract (see Page 1, line 1 Total Participation Goals) or will be set forth on Schedule B, Part I to Task Orders issued pursuant to this Contract, as applicable.

The **Participation Goals** represent a percentage of the total dollar value of the Contract or Task Order, as applicable, that may be achieved by awarding subcontracts to firms certified with New York City Department of Small Business Services as MBEs and/or WBEs, and/or by crediting the participation of prime contractors and/or qualified joint ventures as provided in Section 3 below, unless the goals have been waived or modified by Agency in accordance with Section 6-129 and Part A, Sections 10 and 11 below, respectively.

2. If **Participation Goals** have been established for this Contract or Task Orders issued pursuant to this Contract, Contractor agrees or MUST agree as a material term of the Contract that Contractor MUST be subject to the **Participation Goals**, unless the goals are waived or modified by Agency in accordance with Section 6-129 and Part A, Sections 10 and 11 below, respectively.

3. If **Participation Goals** have been established for this Contract or Task Order issued pursuant to this Contract, a Contractor that is an MBE and/or WBE MUST be permitted to count its own participation toward fulfillment of the relevant **Participation Goal**, provided that in accordance with Section 6-129 the value of Contractor's participation MUST be determined by subtracting from the total value of the Contract or Task Order, as applicable, any amounts that the Contractor pays to direct subcontractors (as defined in Section 6-129(c)(13)), and provided further that a Contractor that is certified as both an MBE and a WBE may count its own participation either toward the goal for MBEs or the goal for WBEs, but not both.

A Contractor that is a qualified joint venture (as defined in Section 6-129(c)(30)) MUST be permitted to count a percentage of its own participation toward fulfillment of the relevant **Participation Goal**. In accordance with Section 6-129, the value of Contractor's participation MUST be determined by subtracting from the total value of the Contract or Task Order, as applicable, any amounts that Contractor pays to direct subcontractors, and then multiplying the remainder by the percentage to be applied to total profit to determine the amount to which an MBE or WBE is entitled pursuant to the joint venture agreement, provided that where a participant in a joint venture is certified as both an MBE and a WBE, such amount MUST be counted either toward the goal for MBEs or the goal for WBEs, but not both.

4. A. If **Participation Goals** have been established for this Contract, a prospective contractor MUST be required to submit with its bid or proposal, as applicable, a completed Schedule B, M/WBE Utilization Plan, Part II (see Pages 2-4) indicating: (a) whether the contractor is an MBE or WBE, or qualified joint venture; (b) the percentage of work it intends to award to direct subcontractors; and (c) in cases where the contractor intends to award direct subcontracts, a description of the type and dollar value of work designated for participation by MBEs and/or WBEs, and the time frames in which such work is scheduled to begin and end. In the event that this M/WBE Utilization Plan indicates that the bidder or proposer, as applicable, does not intend to meet the **Participation Goals**, the bid or proposal, as applicable, MUST be deemed non-responsive, unless Agency has granted the bidder or proposer, as applicable, a pre- award waiver of the Participation Goals in accordance with Section 6-129 and Part A, Section 10 below.

B. (i) If this Contract is for a master services agreement or other requirements type contract that will result in the issuance of Task Orders that will be individually registered ("Master Services Agreement") and is subject to M/WBE **Participation Goals**, a prospective contractor MUST be required to submit with its bid or proposal, as applicable, a completed Schedule B, M/WBE Participation Requirements for Master Services Agreements That Will Require Individually Registered Task Orders, Part II (page 2) indicating the prospective contractor's certification and required affirmations to make all reasonable good faith efforts to meet participation goals established on each individual Task Order issued pursuant to this Contract, or if a partial waiver is obtained or such goals are modified by the Agency, to meet the modified **Participation Goals** by soliciting and obtaining the participation of certified MBE and/or WBE firms. In the event that the Schedule B indicates that the bidder or proposer, as applicable, does not intend to meet the **Participation Goals** that may be established on Task Orders issued pursuant to this Contract, the bid or proposal, as applicable, MUST be deemed nonresponsive.

(ii) **Participation Goals** on a Master Services Agreement will be established for individual Task Orders issued after the Master Services Agreement is awarded. If **Participation Goals** have been established on a Task Order, a contractor MUST be required to submit a Schedule B – M/WBE Utilization Plan For Independently Registered Task Orders That Are Issued Pursuant to Master Services Agreements, Part II (see Pages 2-4) indicating: (a) whether the contractor is an MBE or WBE, or qualified joint venture; (b) the percentage of work it intends to award to direct subcontractors; and (c) in cases where the contractor intends to award direct subcontracts, a description of the type and dollar value of work designated for participation by MBEs and/or WBEs, and the time frames in which such work is scheduled to begin and end. The contractor must engage in good faith efforts to meet the **Participation Goals** as established for the Task Order unless Agency has granted the contractor a pre-award waiver of the Participation Goals in accordance with Section 6-129 and Part A, Section 10 below.

C. THE BIDDER/PROPOSER MUST COMPLETE THE SCHEDULE B INCLUDED HEREIN (SCHEDULE B, PART II). A SCHEDULE B SUBMITTED BY THE BIDDER/PROPOSER WHICH DOES NOT INCLUDE THE VENDOR CERTIFICATION AND REQUIRED AFFIRMATIONS (SEE SECTION V OF PART II) WILL BE DEEMED TO BE NON-RESPONSIVE, UNLESS A FULL WAIVER OF THE PARTICIPATION GOALS IS GRANTED (SCHEDULE B, PART III). IN THE EVENT THAT THE CITY DETERMINES THAT THE BIDDER/PROPOSER HAS SUBMITTED A SCHEDULE B WHERE THE VENDOR CERTIFICATION AND REQUIRED AFFIRMATIONS ARE COMPLETED BUT OTHER ASPECTS OF THE SCHEDULE B ARE NOT COMPLETE, OR CONTAIN A COPY OR COMPUTATION ERROR THAT IS AT ODDS WITH THE VENDOR CERTIFICATION AND AFFIRMATIONS, THE BIDDER/PROPOSER WILL BE NOTIFIED BY THE AGENCY AND WILL BE GIVEN FOUR (4) CALENDAR DAYS FROM RECEIPT OF NOTIFICATION TO CURE THE SPECIFIED DEFICIENCIES AND RETURN A COMPLETED SCHEDULE B TO THE AGENCY. FAILURE TO DO

SO WILL RESULT IN A DETERMINATION THAT THE BID/PROPOSAL IS NON-RESPONSIVE. RECEIPT OF NOTIFICATION IS DEFINED AS THE DATE NOTICE IS E-MAILED OR FAXED (IF THE BIDDER/PROPOSER HAS PROVIDED AN E-MAIL ADDRESS OR FAX NUMBER), OR NO LATER THAN FIVE (5) CALENDAR DAYS FROM THE DATE OF MAILING OR UPON DELIVERY, IF DELIVERED.

5. Where an **M/WBE** Utilization Plan has been submitted, the Contractor MUST, within 30 days of issuance by Agency of a notice to proceed, submit a list of proposed persons or entities to which it intends to award subcontracts within the subsequent 12 months. In the case of multiyear contracts, such list MUST also be submitted every year thereafter. The Agency may also require the Contractor to report periodically about the contracts awarded by its direct subcontractors to indirect subcontractors (as defined in Section 6-129(c)(22)). **PLEASE NOTE: If this Contract is a public works project subject to GML §101(5) (i.e., a contract valued at or below $3M for projects in New York City) or if the Contract is subject to a project labor agreement in accordance with Labor Law §222, and the bidder is required to identify at the time of bid submission its intended subcontractors for the Wicks trades (plumbing and gas fitting; steam heating, hot water heating, ventilating and air conditioning (HVAC); and electric wiring), the Contractor must identify all those to which it intends to award construction subcontracts for any portion of the Wicks trade work at the time of bid submission, regardless of what point in the life of the contract such subcontracts will occur. In identifying intended subcontractors in the bid submission, bidders may satisfy any Participation Goals established for this Contract by proposing one or more subcontractors that are MBEs and/or WBEs for any portion of the Wicks trade work.** In the event that the Contractor's selection of a subcontractor is disapproved, the Contractor MUST have a reasonable time to propose alternate subcontractors.

6. MBE and WBE firms must be certified by DSBS in order for the Contractor to credit such firms' participation toward the attainment of the **Participation Goals**. Such certification must occur prior to the firms' commencement of work. A list of MBE and WBE firms may be obtained from the DSBS website at www.nyc.gov/buycertified, by emailing DSBS at buyer@sbs.nyc.gov, by calling (212) 513-6356, or by visiting or writing DSBS at 110 William St., New York, New York, 10038, 7th floor. Eligible firms that have not yet been certified may contact DSBS in order to seek certification by visiting www.nyc.gov/getcertified, emailing MWBE@sbs.nyc.gov, or calling the DSBS certification helpline at (212) 513-6311. A firm that is certified as both an MBE and a WBE may be counted either toward the goal for MBEs or the goal for WBEs, but not both. No credit MUST be given for participation by a graduate MBE or graduate WBE, as defined in Section 6-129(c)(20).

7. Where an **M/WBE** Utilization Plan has been submitted, the Contractor MUST, with each voucher for payment, and/or periodically as Agency may require, submit statements, certified under penalty of perjury, which MUST include, but not be limited to,: the total amount the Contractor paid to its direct subcontractors, and, where applicable pursuant to Section 6-129(j), the total amount direct subcontractors paid to indirect subcontractors; the names, addresses and contact numbers of each MBE or WBE hired as a subcontractor by the Contractor, and, where applicable, hired by any of the Contractor's direct subcontractors; and the dates and amounts paid to each MBE or WBE. The Contractor MUST also submit, along with its voucher for final payment: the total amount it paid to subcontractors, and, where applicable pursuant to Section 6-129(j), the total amount its direct subcontractors paid directly to their indirect subcontractors; and a final list, certified under penalty of perjury, which MUST include the name, address and contact information of each subcontractor that is an MBE or WBE, the work performed by, and the dates and amounts paid to each.

8. If payments made to, or work performed by, MBEs or WBEs are less than the amount specified in the Contractor's **M/WBE** Utilization Plan, Agency MUST take appropriate action, in accordance with Section 6-129 and Article II below, unless the Contractor has obtained a modification of its **M/WBE** Utilization Plan in accordance with Section 6-129 and Part A, Section 11 below.

9. Where an **M/WBE** Utilization Plan has been submitted, and the Contractor requests a change order the value of which exceeds the greater of 10 percent of the Contract or Task Order, as applicable, or $500,000, Agency MUST review the scope of work for the Contract or Task Order, as applicable, and the scale and types of work involved in the change order, and determine whether the **Participation Goals** should be modified.

10. Pre-award waiver of the **Participation Goals**. (a) A bidder or proposer, or contractor with respect to a Task Order, may seek a pre-award full or partial waiver of the **Participation Goals** in accordance with Section 6-129, which requests that Agency change one or more **Participation Goals** on the grounds that the **Participation Goals** are unreasonable in light of the availability of certified firms to perform the services required, or by demonstrating that it has legitimate business reasons for proposing a lower level of subcontracting in its M/WBE Utilization Plan.

(b) To apply for a full or partial waiver of the **Participation Goals**, a bidder, proposer, or contractor, as applicable, must complete Part III (Page 5) of Schedule B and submit such request no later than seven (7) calendar days prior to the date and time the bids, proposals, or Task Orders are due, in writing to the Agency by email at zhangji@ddc.nyc.gov or via facsimile at (718) 391-1886. Bidders, proposers, or contractors, as applicable, who have submitted requests will receive an Agency response by no later than two (2) calendar days prior to the due date for bids, proposals, or Task Orders; provided, however, that if that date would fall on a weekend or holiday, an Agency response will be provided by close-of-business on the business day before such weekend or holiday date.

(c) If the Agency determines that the **Participation Goals** are unreasonable in light of the availability of certified firms to perform the services required, it MUST revise the solicitation and extend the deadline for bids and proposals, or revise the Task Order, as applicable.

(d) Agency may grant a full or partial waiver of the **Participation Goals** to a bidder, proposer or contractor, as applicable, who demonstrates—before submission of the bid, proposal or Task Order, as applicable—that it has legitimate business reasons for proposing the level of subcontracting in its **M/WBE** Utilization Plan. In making its determination, Agency MUST consider factors that MUST include, but not be limited to, whether the bidder, proposer or contractor, as applicable, has the capacity and the bona fide intention to perform the Contract without any subcontracting, or to perform the Contract without awarding the amount of subcontracts represented by the **Participation Goals**. In making such determination, Agency may consider whether the **M/WBE** Utilization Plan is consistent with past subcontracting practices of the bidder, proposer or contractor, as applicable, whether the bidder, proposer or contractor, as applicable, has made efforts to form a joint venture with a certified firm, and whether the bidder, proposer, or contractor, as applicable, has made good faith efforts to identify other portions of the Contract that it intends to subcontract.

11. Modification of **M/WBE** Utilization Plan. (a) A Contractor may request a modification of its **M/WBE** Utilization Plan after award of this Contract. **PLEASE NOTE: If this Contract is a public works project subject to GML §101(5) (i.e., a contract valued at or below $3M for projects in New York City) or if the Contract is subject to a project labor agreement in accordance with Labor Law §222, and the bidder is required to identify at the time of bid submission its intended subcontractors for the Wicks trades (plumbing and gas fitting; steam heating, hot water heating, ventilating and air conditioning (HVAC); and electric wiring), the Contractor may request a Modification of its M/WBE Utilization Plan as part of its bid submission.** The Agency may grant a request for Modification of a Contractor's **M/WBE** Utilization Plan if it determines that the Contractor has established, with appropriate documentary and other evidence, that it made reasonable, good faith efforts to meet the **Participation Goals.** In making such determination, Agency MUST consider evidence of the following efforts, as applicable, along with any other relevant factors:

(i) The Contractor advertised opportunities to participate in the Contract, where appropriate, in general circulation media, trade and professional association publications and small business media, and publications of minority and women's business organizations;
(ii) The Contractor provided notice of specific opportunities to participate in the Contract, in a timely manner, to minority and women's business organizations;
(iii) The Contractor sent written notices, by certified mail or facsimile, in a timely manner, to advise MBEs or WBEs that their interest in the Contract was solicited;
(iv) The Contractor made efforts to identify portions of the work that could be substituted for portions originally designated for participation by MBEs and/or WBEs in the M/WBE Utilization Plan, and for which the Contractor claims an inability to retain MBEs or WBEs;

(v) The Contractor held meetings with MBEs and/or WBEs prior to the date their bids or proposals were due, for the purpose of explaining in detail the scope and requirements of the work for which their bids or proposals were solicited;
(vi) The Contractor made efforts to negotiate with MBEs and/or WBEs as relevant to perform specific subcontracts, or act as suppliers or service providers;
(vii) Timely written requests for assistance made by the Contractor to Agency's M/WBE liaison officer and to DSBS;
(viii) Description of how recommendations made by DSBS and Agency were acted upon and an explanation of why action upon such recommendations did not lead to the desired level of participation of MBEs and/or WBEs.

Agency's M/WBE officer MUST provide written notice to the Contractor of the determination.

(b) The Agency may modify the **Participation Goals** when the scope of the work has been changed by the Agency in a manner that affects the scale and types of work that the Contractor indicated in its **M/WBE** Utilization Plan would be awarded to subcontractors.

12. If this Contract is for an indefinite quantity of construction, standard or professional services or is a requirements type contract and the Contractor has submitted an **M/WBE** Utilization Plan and has committed to subcontract work to MBEs and/or WBEs in order to meet the **Participation Goals**, the Contractor will not be deemed in violation of the M/WBE Program requirements for this Contract with regard to any work which was intended to be subcontracted to an MBE and/or WBE to the extent that the Agency has determined that such work is not needed.

13. If **Participation Goals** have been established for this Contract or a Task Order issued pursuant to this Contract, at least once annually during the term of the Contract or Task Order, as applicable, Agency MUST review the Contractor's progress toward attainment of its M/WBE Utilization Plan, including but not limited to, by reviewing the percentage of work the Contractor has actually awarded to MBE and/or WBE subcontractors and the payments the Contractor made to such subcontractors.

14. If **Participation Goals** have been established for this Contract or a Task Order issued pursuant to this Contract, Agency MUST evaluate and assess the Contractor's performance in meeting those goals, and such evaluation and assessment MUST become part of the Contractor's overall contract performance evaluation.

PART B: MISCELLANEOUS

1. The Contractor MUST take notice that, if this solicitation requires the establishment of an **M/WBE** Utilization Plan, the resulting contract may be audited by DSBS to determine compliance with Section 6-129. See §6-129(e)(10). Furthermore, such resulting contract may also be examined by the City's Comptroller to assess compliance with the **M/WBE** Utilization Plan.

2. Pursuant to DSBS rules, construction contracts that include a requirement for an **M/WBE** Utilization Plan MUST not be subject to the law governing Locally Based Enterprises set forth in Section 6-108.1 of the Administrative Code of the City of New York.

3. DSBS is available to assist contractors and potential contractors in determining the availability of MBEs and/or WBEs to participate as subcontractors, and in identifying opportunities that are appropriate for participation by MBEs and/or WBEs in contracts.

4. Prospective contractors are encouraged to enter into qualified joint venture agreements with MBEs and/or WBEs as defined by Section 6-129(c)(30).

5. By submitting a bid or proposal the Contractor hereby acknowledges its understanding of the M/WBE Program requirements set forth herein and the pertinent provisions of Section 6-129, and any rules promulgated thereunder, and if awarded this Contract, the Contractor hereby agrees to comply with the M/WBE Program requirements of this Contract and pertinent provisions of Section 6-129, and any rules promulgated thereunder, all of which MUST be deemed to be material terms of this Contract. The Contractor hereby agrees to make all reasonable, good faith efforts to solicit and obtain the participation of MBEs and/or WBEs to meet the required **Participation Goals**.

ARTICLE II. ENFORCEMENT

1. If Agency determines that a bidder or proposer, as applicable, has, in relation to this procurement, violated Section 6-129 or the DSBS rules promulgated pursuant to Section 6-129, Agency may disqualify such bidder or proposer, as applicable, from competing for this Contract and the Agency may revoke such bidder's or proposer's prequalification status, if applicable.

2. Whenever Agency believes that the Contractor or a subcontractor is not in compliance with Section 6-129 or the DSBS rules promulgated pursuant to Section 6-129, or any provision of this Contract that implements Section 6-129, including, but not limited to any **M/WBE** Utilization Plan, Agency MUST send a written notice to the Contractor describing the alleged noncompliance and offering the Contractor an opportunity to be heard. Agency MUST then conduct an investigation to determine whether such Contractor or subcontractor is in compliance.

3. In the event that the Contractor has been found to have violated Section 6-129, the DSBS rules promulgated pursuant to Section 6-129, or any provision of this Contract that implements Section 6-129, including, but not limited to, any **M/WBE** Utilization Plan, Agency may determine that one of the following actions should be taken:

(a) entering into an agreement with the Contractor allowing the Contractor to cure the violation;
(b) revoking the Contractor's pre-qualification to bid or make proposals for future contracts;
(c) making a finding that the Contractor is in default of the Contract;
(d) terminating the Contract;
(e) declaring the Contractor to be in breach of Contract;
(f) withholding payment or reimbursement;
(g) determining not to renew the Contract;
(h) assessing actual and consequential damages;
(i) assessing liquidated damages or reducing fees, provided that liquidated damages may be based on amounts representing costs of delays in carrying out the purposes of the M/WBE Program, or in meeting the purposes of the Contract, the costs of meeting utilization goals through additional procurements, the administrative costs of investigation and enforcement, or other factors set forth in the Contract;
(j) exercising rights under the Contract to procure goods, services or construction from another contractor and charge the cost of such contract to the Contractor that has been found to be in noncompliance; or
(k) taking any other appropriate remedy.

4. If an **M/WBE** Utilization Plan has been submitted, and pursuant to this Article II, Section 3, the Contractor has been found to have failed to fulfill its **Participation Goals** contained in its **M/WBE** Utilization Plan or the **Participation Goals** as modified by Agency pursuant to Article I, Part A, Section 11, Agency may assess liquidated damages in the amount of ten percent (10%) of the difference between the dollar amount of work required to be awarded to MBE and/or WBE firms to meet the **Participation Goals** and the dollar amount the Contractor actually awarded and paid, and/or credited, to MBE and/or WBE firms. In view of the difficulty of accurately ascertaining the loss which the City will suffer by reason of Contractor's failure to meet the **Participation Goals**, the foregoing amount is hereby fixed and agreed as the liquidated damages that the City will suffer by reason of such failure, and not as a penalty. Agency may deduct and retain out of any monies which may become due under this Contract the amount of any such liquidated damages; and in case the amount which may become due under this Contract MUST be less than the amount of liquidated damages suffered by the City, the Contractor MUST be liable to pay the difference.

5. Whenever Agency has reason to believe that an MBE and/or WBE is not qualified for certification, or is participating in a contract in a manner that does not serve a commercially useful function (as defined in Section 6-129(c)(8)), or has violated any provision of Section 6- 129, Agency MUST notify the Commissioner of DSBS who MUST determine whether the certification of such business enterprise should be revoked.

6. Statements made in any instrument submitted to Agency pursuant to Section 6-129 MUST be submitted under penalty of perjury and any false or misleading statement or omission MUST be grounds for the application of any applicable criminal and/or civil penalties for perjury. The making of a false or fraudulent statement by an MBE and/or WBE in any instrument submitted pursuant to Section 6-129 MUST, in addition, be grounds for revocation of its certification.

7. The Contractor's record in implementing its **M/WBE** Utilization Plan MUST be a factor in the evaluation of its performance. Whenever Agency determines that a Contractor's compliance with an **M/WBE** Utilization Plan has been unsatisfactory, Agency MUST, after consultation with the City Chief Procurement Officer, file an advice of caution form for inclusion in VENDEX as caution data.

Tax ID #: _____ APT E-PIN #: 85019B0012

SCHEDULE B – M/WBE Utilization Plan
Part I: M/WBE Participation Goals

Part I to be completed by contracting agency

Contract Overview

APT E- Pin #	85019B0012	**FMS Project ID#:**	GCJA03-2B
Project Title/ Agency PIN #	FOR THE CONSTRUCTION OF RIGHT-OF-WAY GREEN INFRASTRUCTURE IN THE CSO TRIBUTARY AREAS JAM-003 AND JAM-003A/8502019HW0004C		
Bid/Proposal Response Date	APRIL 1, 2019		
Contracting Agency	Department of Design and Construction		
Agency Address	30-30 Thomson Ave. **City** Long Island City	**State** NY	**Zip Code** 11101
Contact Person	Janelle Husain	**Title**	MWBE Outreach and Compliance Analyst
Telephone #	(718) 391-1322	**Email**	husainja@ddc.nyc.gov

[redacted]

PROJECT ID: GCJA03-2B

FOR THE CONSTRUCTION OF RIGHT-OF-WAY GREEN INFRASTRUCTURE IN THE CSO TRIBUTARY AREAS JAM-003 AND JAM-003A

Together With All Work Incidental Thereto
BOROUGH OF QUEENS
CITY OF NEW YORK

[redacted]

Prime Contract Industry: Construction

Group	Percentage	
Unspecified*	**25%**	
or		
Black American	**UNSPECIFIED***	
Hispanic American	**UNSPECIFIED***	
Asian American	**UNSPECIFIED***	
Women	**UNSPECIFIED***	
Total Participation Goals	**25%**	**Line 1**

**Note: For this procurement, individual ethnicity and gender goals are not specified. The Total Participation Goal for construction contracts may be met by using either Black-American, Hispanic-American, Asian American, or Women certified firms or any combination of such firms.*

Tax ID #: 20-4530527 APT E- PIN #: 85019B0012

SCHEDULE B - Part II: M/WBE Participation Plan

Part II to be completed by the bidder/proposer.
Please note: For Non-M/WBE Prime Contractors who will NOT subcontract any services and will self-perform the entire contract, you must obtain a FULL waiver by completing the Waiver Application on pages 17 and 18 and timely submitting it to the contracting agency pursuant to the Notice to Prospective Contractors. Once a FULL WAIVER is granted, it must be included with your bid or proposal and you do not have to complete or submit this form with your bid or proposal.

Section I: Prime Contractor Contact Information

Tax ID #	20-4530527	**FMS Vendor ID #**	VS0001577 9
Business Name	FCI Industries Corp	**Contact Person**	Daniel Davidson
Address	550 Franklin Avenue Mt. Vernon, NY 10550		
Telephone #	914.665.4700	**Email**	daviddson@fcicorp.org

Section II: M/WBE Utilization Goal Calculation: Check the applicable box and complete subsection

PRIME CONTRACTOR ADOPTING AGENCY M/WBE PARTICIPATION GOALS

☒ **For Prime Contractors (including Qualified Joint Ventures and M/WBE firms) adopting Agency M/WBE Participation Goals.**	**Total Bid/Proposal Value**		**Agency Total Participation Goals (Line 1, Page 13)**		**Calculated M/WBE Participation Amount**
Calculate the total dollar value of your total bid that you agree will be awarded to M/WBE subcontractors for services and/or credited to an M/WBE prime contractor or Qualified Joint Venture. Please review the Notice to Prospective Contractors for more information on how to obtain credit for M/WBE participation.	$ 19,123,370	X	0.25	=	$ 4,780,842.50 **Line 2**

PRIME CONTRACTOR OBTAINED PARTIAL WAIVER APPROVAL: ADOPTING MODIFIED M/WBE PARTICIPATION GOALS

☐ **For Prime Contractors (including Qualified Joint Ventures and M/WBE firms) adopting Modified M/WBE Participation Goals.**	**Total Bid/Proposal Value**		**Adjusted Participation Goal (From Partial Waiver)**		**Calculated M/WBE Participation Amount**
Calculate the total dollar value of your total bid that you agree will be awarded to M/WBE subcontractors for services and/or credited to an M/WBE prime contractor or Qualified Joint Venture. Please review the Notice to Prospective Contractors for more information on how to obtain credit for M/WBE participation.	$	X		=	$ **Line 3**

APT E-PIN #: 85019B0012

Tax ID #: 20-4530527

Section III: M/WBE Utilization Plan: How Proposer/Bidder Will Fulfill M/WBE Participation Goals. Please review the Notice to Prospective Contractors for more information on how to obtain credit for M/WBE participation. Check applicable box. The Proposer or Bidder will fulfill the M/WBE Participation Goals:

☐ As an M/WBE Prime Contractor that will self-perform and/or subcontract to other M/WBE firms a portion of the contract the value of which is at least the amount located on Lines 2 or 3 above, as applicable. The value of any work subcontracted to non-M/WBE firms will not be credited towards fulfillment of M/WBE Participation Goals. Please check all that apply to Prime Contractor:

☐ MBE ☐ WBE

☐ As a Qualified Joint Venture with an M/WBE partner, in which the value of the M/WBE partner's participation and/or the value of any work subcontracted to other M/WBE firms is at least the amount located on Lines 2 or 3 above, as applicable. The value of any work subcontracted to non M/WBE firms will not be credited towards fulfillment of M/WBE Participation Goals.

☒ As a non M/WBE Prime Contractor that will enter into subcontracts with M/WBE firms the value of which is at least the amount located on Lines 2 or 3 above, as applicable.

Section IV: General Contract Information

What is the expected percentage of the total contract dollar value that you expect to award in subcontracts for services, regardless of M/WBE status? % 32

545 ccds
Project Duration
460 ccds
200 days
300 days
460 ccds
460 ccds
AOBE 545
150 days
60 days

5/21/19

✓ Scopes of Subcontract Work

Enter brief description of the type(s) and dollar value of subcontracts for all/any services you plan on subcontracting if awarded this contract. For each item, indicate whether the work is designated for participation by MBEs and/or WBEs and the time frame in which such work is scheduled to begin and end. Use additional sheets if necessary.

	Amount	M/WBE %	M/WBE $
1. Concrete flatwork	4,026,670	75	3,020,000
2. Tree Grates	710,220	100	710,220
3. Landscape	634,440	100	634,440
4. Excav/Disposal	200,000	50	100,000
5. Trucking	360,000	90	324,000
6. Crossing Guards	87,680	0	0
7. Photo	98,640	0	0
8. Tree Consultant	32,240	0	0
9.			
10.	6,149,890	77.9%	4,788,660
11.			
12.			
13.			
14.			
15.			
16.	32% of		25% of
17.	Total Contract		Total Contract

Tax ID #: 20-4530527

APT E-PIN #: 85019B0012

Section V: Vendor Certification and Required Affirmations

I hereby:

1) acknowledge my understanding of the M/WBE participation requirements as set forth herein and the pertinent provisions of Section 6-129 of the Administrative Code of the City of New York ("Section 6-129"), and the rules promulgated thereunder;

2) affirm that the information supplied in support of this M/WBE Utilization Plan is true and correct;

3) agree, if awarded this Contract, to comply with the M/WBE participation requirements of this Contract, the pertinent provisions of Section 6-129, and the rules promulgated thereunder, all of which MUST be deemed to be material terms of this Contract;

4) agree and affirm that it is a material term of this Contract that the Vendor will award the total dollar value of the M/WBE Participation Goals to certified MBEs and/or WBEs, unless a full waiver is obtained or such goals are modified by the Agency; and

5) agree and affirm, if awarded this Contract, to make all reasonable, good faith efforts to meet the M/WBE Participation Goals, or if a partial waiver is obtained or such goals are modified by the Agency, to meet the modified Participation Goals, by soliciting and obtaining the participation of certified MBE and/or WBE firms.

✓ Signature _____ Date 4/1/19

Print Name Richard Persico Title President or Sole Officer

SCHEDULE B – PART III – REQUEST FOR WAIVER OF M/WBE PARTICIPATION REQUIREMENT

Contract Overview

Tax ID # _____ **FMS Vendor ID #** _____

Business Name _____

Contact Name _____ **Telephone #** _____ **Email** _____

Type of Procurement ☐ **Competitive Sealed Bids** ☐ **Other** **Bid/Response Due Date** _____

APT E-PIN # (for this procurement): _____ **Contracting Agency:** _____

M/WBE Participation Goals as described in bid/solicitation documents

_____ % **Agency M/WBE Participation Goal**

Proposed M/WBE Participation Goal as *anticipated by vendor seeking waiver*

_____ % **of the total contract value anticipated in good faith by the bidder/proposer to be subcontracted for services and/or credited to an M/WBE Prime Contractor or Qualified Joint Venture.**

Basis for Waiver Request: *Check appropriate box & explain in detail below (attach additional pages if needed)*

☐ **Vendor does not subcontract services, and has the capacity and good faith intention to perform all such work itself with its own employees.**

☐ **Vendor subcontracts *some* of this type of work but at a *lower* % than bid/solicitation describes, and has the capacity and good faith intention to do so on this contract. (Attach subcontracting plan outlining services that the vendor will self-perform and subcontract to other vendors or consultants.)**

☐ **Vendor has other legitimate business reasons for proposing the M/WBE Participation Goal above. Explain under separate cover.**

References

List 3 most recent contracts performed for NYC agencies (if any). Include information for each subcontract awarded in performance of such contracts. Add more pages if necessary.

CONTRACT NO. _____ **AGENCY** _____ **DATE COMPLETED** _____

Total Contract Amount $ _____ **Total Amount Subcontracted $** _____

Item of Work Subcontracted and Value of subcontract _____ Item of Work Subcontracted and Value of subcontract _____ Item of Work Subcontracted and Value of subcontract _____

CONTRACT NO. _____ **AGENCY** _____ **DATE COMPLETED** _____

Total Contract Amount $ _____ **Total Amount Subcontracted $** _____

Item of Work Subcontracted and Value of subcontract _____ Item of Work Subcontracted and Value of subcontract _____ Item of Work Subcontracted and Value of subcontract _____

CONTRACT NO. **AGENCY** **DATE COMPLETED**

Total Contract Amount $ **Total Amount Subcontracted $**

Item of Work Subcontracted and Value of subcontract _____ Item of Work Subcontracted and Value of subcontract _____ Item of Work Subcontracted and Value of subcontract _____

List 3 most recent contracts performed for other entities. Include information for each subcontract awarded in performance of such contracts. Add more pages if necessary.

(Complete ONLY if vendor has performed fewer than 3 New York City contracts.)

TYPE OF Contract _____ **ENTITY** _____ **DATE COMPLETED** _____

Manager at entity that hired vendor (Name/Phone No./Email) _____

Total Contract Amount $ _____ **Total Amount Subcontracted** $ _____

Type of Work Subcontracted _____ _____ _____

_____

TYPE OF Contract _____ **AGENCY/ENTITY** _____ **DATE COMPLETED** _____

Manager at agency/entity that hired vendor (Name/Phone No./Email) _____

Total Contract Amount $ _____ **Total Amount Subcontracted** $ _____

Item of Work Subcontracted and Value of subcontract _____ Item of Work Subcontracted and Value of subcontract _____ Item of Work Subcontracted and Value of subcontract _____

_____

TYPE OF Contract _____ **AGENCY/ENTITY** _____ **DATE COMPLETED** _____

Manager at entity that hired vendor (Name/Phone No./Email) _____

Total Contract Amount $ _____ **Total Amount Subcontracted** $ _____

Item of Work Subcontracted and Value of subcontract _____ Item of Work Subcontracted and Value of subcontract _____ Item of Work Subcontracted and Value of subcontract _____

_____

VENDOR CERTIFICATION: *I hereby affirm that the information supplied in support of this waiver request is true and correct, and that this request is made in good faith*

Signature: _____ **Date:** _____

Print Name: _____ **Title:** _____

Shaded area below is for agency completion only

APPRENTICESHIP PROGRAM REQUIREMENTS

Bidders are advised that the Apprenticeship Program Requirements set forth below apply to each contract for which a check mark is indicated before the word "Yes". Compliance with these requirements will be determined solely by the City.

__√__ YES _____ NO

(1) Apprenticeship Program Requirements

Notice to Bidders: Please be advised that, pursuant to the authority granted to the City under Labor Law Section 816-b, the Department of Design and Construction hereby requires that the contractor awarded a contract as a result of this Invitation for Bids, and any of its subcontractors with subcontracts worth two million dollars or over, have, prior to entering into such contract or subcontract, apprenticeship agreements appropriate for the type and scope of work to be performed that have been registered with, and approved by, the New York State Commissioner of Labor. In addition, the contractor and its subcontractors will be required to show that such apprenticeship program/s have successfully passed the two year Probation period following the initial registration date of such program/s with the New York State Department of Labor.

The failure to prove, upon request, that these requirements have been met MUST result in the contract not being awarded to the contractor or the subcontract not being approved.

Please be further advised that, pursuant to Labor Law Section 220, the allowable ratio of apprentices to journeypersons in any craft classification MUST not be greater than the ratio permitted to the contractor as to its workforce on any job under the registered apprenticeship program.

(2) Apprenticeship Program Questionnaire

The bidder must submit a completed and signed Apprenticeship Program Questionnaire. The Questionnaire is set forth on the following page of the Bid Booklet.

APPRENTICESHIP PROGRAM QUESTIONNAIRE ("APQ")

Bidder Name: PCI Industries Corp.
Project ID Number: GCSA03-2B

The Bidder MUST complete, sign, and submit this Apprenticeship Program Questionnaire with its bid.

1. Does the bidder have any Apprenticeship Program agreement(s) appropriate for the type and scope of work to be performed? (Note: Participation may be by either direct sponsorship or through collective bargaining agreement(s).)

   ✓ YES _____ NO

2. Has/have the bidder's Apprenticeship Program agreement(s) been registered with, and approved by the New York State Commissioner of Labor ("NYSDOL Commissioner")?

   _____ YES ✓ NO

3. Has/have the bidder's Apprenticeship Program successfully passed the two-year Probation period following its initial registration with the New York State Department of Labor ("NYSDOL")?

   ✓ YES _____ NO

If the answers to Questions 1, 2, and 3 are "Yes". The bidder MUST, in the space below (and/or attached herewith where applicable), provide the contact information for such Apprenticeship Program(s) as well as information demonstrating that such Apprenticeship Program(s) have passed the two-year Probation period following its initial registration with the NYSDOL. (The bidder may attach additional pages if necessary).

- **Where the bidder directly sponsors any such apprenticeship Program(s),** the bidder MUST provide the following:
  - The trade classification(s) covered by such program(s), and the date(s) such program(s) was/were approved by the NYSDOL Commissioner; and/or
  - A copy of a letter(s) from the NYSDOL, on NYSDOL's letterhead, executed by an official thereof, which verifies/verify the trade classification(s) covered by such program(s), and the date(s) such program(s) was/were approved by the NYSDOL Commissioner and the Active status of such program(s).

- **Where the bidder participates in any such Apprenticeship Program(s) through its membership in an employer organization(s) that directly sponsors such program(s) or where the employer association(s) participates in such program(s) through collective bargaining,** the bidder MUST provide the following:
  - The contact information for the employer organization(s), and the apprenticeable trade(s) covered pursuant to the bidder's affiliation therewith, and the date such program(s) was/were approved by the NYSDOL Commissioner; or
  - A letter(s) from such employer organization(s), on letterhead of such organization(s), executed by an officer, delegate or official thereof, which verifies/verify the trade classification(s) covered by such program(s) was/were approved by the NYSDOL Commissioner, and that the bidder is both a member in good standing of the identified employer organization and is subject to the provisions of the Apprenticeship Program agreement(s) sponsored thereby.

APPRENTICESHIP PROGRAM QUESTIONNAIRE ("APQ")

Project ID Number: GCJA 03-28

- **Where the bidder participates in any such Apprenticeship Programs through collective bargaining agreements,** the bidder MUST provide the following:
  - The contact information for such collective bargaining entity(ies) and the apprenticeable trade(s) covered pursuant to the bidder's affiliation therewith;
  - A letter(s) from such collective bargaining entity(ies), on letterhead of such entity(ies), executed by an officer, delegate or official thereof, which verifies/verify the bidder's status as a signatory/participant in good standing to such collective bargaining entity(ies) Apprenticeship Program Agreements.

Union Locals 14, 15, 60, 137, 175 & 731

Bidder: P&T Industries Corp.

By: _____ Title: President & Sole Officer
(Signature of Partner or Corporate Officer)
Richard Persitz

Date: 4/1/19

TEL. (516) 487-3110 FAX (516) 487-3144

UNITED PLANT AND PRODUCTION WORKERS
LOCAL 175

99 MINEOLA AVENUE, ROSLYN HEIGHTS, NEW YORK 11577

Costantino Seminatore
PRESIDENT

Joe Caramanno
SECRETARY TREASURER

February 5, 2018

RE: PCI Industries, Corp
United Plant & Production Workers Local 175
Local 175 Joint Apprenticeship Training Program
NYS Sponsor Code #1853
NYS ATP Code # 18-514

To Whom It May Concern:

This letter will serve to confirm that United Plant & Production Workers Local 175 Joint Apprenticeship Training Program currently conducts a fully registered and approved New York State "Apprenticeship Training Program" ("ATP"). The ATP is co-sponsored by Local 175 and all employers/signatory contractors, including but not limited to PCI Industries, Corp, to the Local 175 Collective Bargaining covering Wages and Working Conditions, dated July 1, 2017 to June 30, 2022.

Our program to date has graduated twelve apprentices and currently has three Apprentices enrolled. Copies of the certificates of completion from New York State can be furnished upon request. Additional Apprentices are available for work.

Any additional questions should be directed to my attention.

Very Truly Yours,

Anthony J. Franco

Anthony J. Franco
Training Director
Joint Apprentice Training Fund

HEAVY, HIGHWAY AND UTILITY AGREEMENT

between

WESTCHESTER PUTNAM COUNTIES HEAVY, HIGHWAY AND UTILITY LABORERS' LOCAL NO. 60

an affiliate of the

EASTERN NEW YORK LABORERS' DISTRICT COUNCIL L.I.U.N.A.

and the

CONSTRUCTION INDUSTRY COUNCIL OF WESTCHESTER AND HUDSON VALLEY, INC.

as well as

INDEPENDENT EMPLOYERS

For the period
April 1, 2017 to March 27, 2021

ARTICLE XXVI
Duration of Agreement

This Agreement shall remain in full force and effect for the period of April 1, 2017 through March 27, 2021 and shall continue to remain in full force and effect from year to year thereafter, unless the Union notifies the Association or the Independent Employer, or the Association or any Independent Employer notifies the Union in writing of its intention to modify or terminate this Agreement at least sixty (60) days prior to the date of any expiration period as herein provided.

IN WITNESS WHEREOF, the parties have executed this Agreement on the day and year first written below.

FOR THE UNION:
WESTCHESTER PUTNAM COUNTIES HEAVY AND HIGHWAY LABORERS' LOCAL NO. 60

By _____
Anthony Ascencao, *Business Manager*

COMMITTEE
Anthony Ascencao
Michael Moreira
Jacinto Fragoso
Frank Bisignano
Andrew Ferraro

FOR THE ASSOCIATION:
CONSTRUCTION INDUSTRY COUNCIL OF WESTCHESTER AND HUDSON VALLEY, INC.:

By _____
Ross Pepe, *President*

FOR THE LABORERS INTERNATIONAL UNION OF NORTH AMERICA:
EASTERN N.Y. LABORERS DISTRICT COUNCIL

By _____
Samuel M. Fresina, *Business Manager*

INTERNATIONAL UNION OF OPERATING ENGINEERS

LOCAL UNION 15, 15A, 15B, 15C, 15D & 15H
AFFILIATED WITH A.F.L.-C.I.O.
Building & Construction Trades Council of New York City
44-40 11TH STREET • LONG ISLAND CITY, NY 11101
Tel: (212) 929-5327 • FAX: (718) 729-3070

Thomas A. Callahan
President and Business Manager

BUSINESS REPRESENTATIVES

CHRISTOPHER R. THOMAS
ANDREW K. CULLIMORE
ANTHONY R. LAROSA

ROBERT J. BURNS
MICHAEL A. SALERNO
DANIEL J. GILMARTIN
PETER A. DONOFRIO

JOHN W. McNAMARA
AUGUSTINO MARTINIELLO
ROBERT G. SHAW, JR.

June, 2018

To Whom It May Concern:

Please be advised that the membership of **Local 15, 15A, International Union of Operating Engineers,** ratified a new 4 year agreement with the General Contractors Association and a 6-year agreement with the Allied Building Metal Industries. These agreements all have an increase of **3% annually,** non-compounded, in the various classifications.

Also, please note that the membership of **Local 15 and 15A, International Union of Operating Engineers**, at their Membership Meeting held on May 17, 2018, voted on the allocation of the increment due July 1, 2018.

GENERAL CONTRACTORS ASSOCIATION – UTILITY WORK – ALLIED – BCA & CAGNY

The membership approved a **$0.75** per hour increase in the **Welfare Fund** bringing the total value of the **Welfare Fund Contribution** from **$8.05 per hour** to **$8.80 per hour** and a **$0.50** per hour increase in the **Annuity Fund** bringing the total value of the **Annuity Fund Contribution** from **$12.25 per hour** to **$12.75 per hour.** Additionally, **$0.05 per hour** was allocated to the **National Training Fund.**

Please note that pursuant to the vote taken by the membership in October, 2006, $0.16 per hour will be deducted from the increment due and added to the Supplemental Dues portion of the fringe benefit stamp.

City Rate. same as 137.1

night 15%

INTERNATIONAL UNION OF OPERATING ENGINEERS

LOCAL 137, 137A, 137B, 137C & 137R, AFL-CIO



Westchester, Putnam and Dutchess Counties

1360 Pleasantville Road, Briarcliff Manor, N.Y. 10510

Phone: (914) 762-0600 Fax: (914) 762-0524

ENGINEERING HEAVY AND HIGHWAY AGREEMENT

Tony - 914-403-0536

COVERING WAGES & WORKING CONDITIONS

March 6, 2017 to February 28, 2021

DURATION

This Agreement shall continue in effect from March 6, 2017 through February 28, 2021.

IN WITNESS WHEREOF, the parties hereto have caused this Agreement to be duly subscribed by their duly authorized representatives this 6th day of March, 2017 and this Agreement shall be binding upon their successors and assigns.

CONSTRUCTION INDUSTRY COUNCIL OF WESTCHESTER AND HUDSON VALLEY, INC.

Pres. _____

Pres. Ross J. Pepe

INTERNATIONAL UNION OF OPERATING ENGINEERS LOCAL 137, 137A, 137B, 137C & 137R AFL-CIO

Bus. Mgr. Jeffrey Loughlin

Rec. Sec. _____

The undersigned Employer doing business as

_____

and having principal offices at

_____

has read and is fully familiar with all the terms and conditions of this Agreement with the INTERNATIONAL UNION OF OPERATING ENGINEERS, LOCAL 137, 137A, 137B, 137C & 137R, and agrees to adhere to and to be bound by all the terms hereof.

EMPLOYER:

_____

_____

_____

Phone #: (_____) _____

BY: _____

TITLE: _____

BUILDING, CONCRETE EXCAVATING & COMMON LABORERS' UNION LOCAL No. 731 of GREATER NEW YORK LONG ISLAND AND VICINITY of the LABORERS' INTERNATIONAL UNION OF NORTH AMERICA

Copy

COPY

INDEPENDENT AGREEMENT

JULY 1, 2016 to APRIL 30, 2022

Local 731

July 1, 2016 - April 30 2022

This Agreement and all of its terms and provisions are based on an effort and a spirit of bringing about more equitable conditions in the Construction Industry, and the language herein shall not be misconstrued to evade the principles or intent of this Agreement.

This Agreement may not be altered, modified or changed in any way unless any such proposed alteration, modification or change is in writing, is approved by the Union and is initialed or signed by an officer of the Union at the location in the Agreement of such proposed alteration, modification or change.

IN WITNESS WHEREOF, the parties have executed this Agreement as of the day and year stated in Article XIII hereof.

EMPLOYER:

BUILDING, CONCRETE, EXCAVATING & COMMON LABORERS' UNION LOCAL NO. 731 OF GREATER NEW YORK, LONG ISLAND & VICINITY

BY: PCI Industries, Corp
(Full and Exact Name of Employer)

BY: _____
Frank Biancaniello
President

BY: Richard Pesico
(Title of signing Representative)

BY: _____
Joseph D'Amato
Business Manager

Print Name

BY: _____
(Title of Signing Representative)

BY: _____
Dominic J. Valdner
Secretary-Treasurer

Sign Name President

Dated: 12/1/16

Project ID. 85019B0012

SAFETY QUESTIONNAIRE

The bidder must include, with its bid, all information requested on this Safety Questionnaire. Failure to provide a completed and signed Safety Questionnaire at the time of bid opening may result in disqualification of the bid as non-responsive.

1. Bidder Information:

Company Name: PCI Industries Corp.

DDC Project Number: GCJA03-2B

Company Size: _____ Ten (10) employees or less

X Greater than ten (10) employees

Company has previously worked for DDC X YES _____ NO

2. Type(s) of Construction Work

TYPE OF WORK	LAST 3 YEARS	THIS PROJECT
General Building Construction	X	
Residential Building Construction		
Nonresidential Building Construction		
Heavy Construction, except building	X	
Highway and Street Construction	X	X
Heavy Construction, except highways	X	
Plumbing, Heating, HVAC		
Painting and Paper Hanging		
Electrical Work		
Masonry, Stonework and Plastering		
Carpentry and Floor Work		
Roofing, Siding, and Sheet Metal		
Concrete Work		
Specialty Trade Contracting		
Asbestos Abatement		
Other (specify)		

3. Experience Modification Rate: 1.00

The Experience Modification Rate (EMR) is a rating generated by the National Council of Compensation Insurance (NCCI). This rating is used to determine the contractor's premium for worker's compensation insurance. The contractor may obtain its EMR by contacting its insurance broker or the NCCI. If the contractor cannot obtain its EMR, it must submit a written explanation as to why.

The Contractor must indicate its Intrastate and Interstate EMR for the past three years. [Note: For contractors with less than three years of experience, the EMR will be considered to be 1.00].

YEAR	INTRASTATE RATE	INTERSTATE RATE
2016	1.18	
2017	1.02	
2018	1.00	

If the Intrastate and/or Interstate EMR for any of the past three years is greater than 1.00, the contractor must attach, to this questionnaire, a written explanation for the rating and identify what corrective action was taken to correct the situation resulting in that rating.

4. OSHA Information:

___ YES ___✓NO Contractor has received a willful violation issued by OSHA or New York City Department of Buildings (NYCDOB) within the last three years.

___ YES ___✓NO Contractor has had an incident requiring OSHA notification within 8 hours (all work-related fatalities) or an incident requiring OSHA notification within 24 hours (all work-related in-patient hospitalizations, all amputations and all losses of an eye).

The Occupational Safety and Health Act (OSHA) of 1970 requires employers with ten or more employees, on a yearly basis to complete and maintain on file the form entitled "Log of Work-related Injuries and Illnesses". This form is commonly referred to as the OSHA 300 Log (OSHA 200 Log for 2001 and earlier).

The OSHA 300 Log must be submitted for the last three years for contractors with more than ten employees.

The Contractor must indicate the total number of hours worked by its employees, as reflected in payroll records for the past three years.

The contractor must submit the Incident Rate for Lost Time Injuries (the Incident Rate) for the past three years. The Incident Rate is calculated in accordance with the formula set forth below. For each given year, the total number of incidents is the total number of non-fatal injuries and illnesses reported on the OSHA 300 Log. The 200,000 hours represents the equivalent of 100 employees working forty hours a week, fifty weeks per year.

$$\text{Incident Rate} = \frac{\text{Total Number of Incidents X 200,000}}{\text{Total Number of Hours Worked by Employees}}$$

YEAR	TOTAL NUMBERS OF HOURS WORKED BY EMPLOYEES	INCIDENT RATE
2016	8,465	47.253
2017	123,534	1.62
2018	189,205	2.12

Project ID. 85019B0012

If the contractor's Incident Rate for any of the past three years is one point higher than the Incident Rate for the type of construction it performs (listed below), the contractor must attach, to this questionnaire, a written explanation for the relatively high rate.

General Building Construction	8.5
Residential Building Construction	7.0
Nonresidential Building Construction	10.2
Heavy Construction, except building	8.7
Highway and Street Construction	9.7
Heavy Construction, except highways	8.3
Plumbing, Heating, HVAC	11.3
Painting and Paper Hanging	6.9
Electrical Work	9.5
Masonry, Stonework and Plastering	10.5
Carpentry and Floor Work	12.2
Roofing, Siding, and Sheet Metal	10.3
Concrete Work	8.6
Specialty Trade Contracting	8.6

5. Safety Performance on Previous DDC Project(s)

___ YES ✓ NO Contractor previously audited by the DDC Office of Site Safety.

DDC Project Number(s): _____, _____, _____

___ YES ✓ NO Accident on previous DDC Project(s).

DDC Project Number(s): _____, _____, _____

___ YES ✓ NO Fatality or Life-altering Injury on DDC Project(s) within the last three years. [Examples of a life-altering injury include loss of limb, loss of a sense (e.g., sight, hearing), or loss of neurological function].

DDC Project Number(s): _____, _____, _____

Date: 5/23/19 By: _____

(Signature of Owner, Partner, Corporate Officer)

Richard Persico

Title: President & Sole Officer

Pre-Award Process

The bidder is advised that as part of the pre-award review of its bid, it may be required to submit the information described in Sections (A) through (D) below. If required, such information must be submitted by the bidder within five (5) business days following receipt of notification from DDC that it is among the low bidders. Such notification from DDC will be by facsimile or in writing and will specify the types of information must be submitted. The types of information the bidder may be required to submit are described below. In the event the bidder fails to submit the required information within the specified time frame, its bid may be rejected as nonresponsive.

****

(A) **Project Reference Form**: If required, the bidder must complete and submit the Project Reference Form set forth on pages 27 through 29 of this Bid Booklet. The Project Reference Form consists of 3 parts: (1) Contracts Completed by the Bidder, (2) Contracts Currently Under Construction by the Bidder, and (3) Pending Contracts Not Yet Started by the Bidder.

(B) **Copy of License**: If required, the bidder must submit a copy of the license under which the bidder will be performing the work. Such license must clearly show the following: (1) Name of the Licensee, (2) License Number, and (3) Expiration date of the License. A copy of the license will be required from bidders for the following contracts: Plumbing Work, Electrical Work and Asbestos Abatement.

(C) **Financial Information**: If required, the bidder must submit the financial information described below:

(1) Audited Financial Statements: Financial statements (Balance Sheet and Income Statement) of the entity submitting the bid, as audited by an independent auditor licensed to practice as a certified public accountant (CPA). Audited financial statements for the three most recent fiscal years must be submitted. Each such financial statement must include the auditor's standard report.

If the bidder does not have audited financial statements, it must submit an affidavit attesting to the fact that the bidder does not have such statements. In addition, the bidder must submit the following documentation covering the three most recent fiscal years: signed federal tax returns, unaudited financial statements, and a "certified review letter" from a certified public accountant (CPA) verifying the unaudited financial statements.

Unless the most recent audited or unaudited financial statement was issued within ninety (90) days, the bidder must submit interim financial information that includes data on financial position and results of operation (income data) for the current fiscal year. Such information may be summarized on a monthly or quarterly basis or at other intervals.

(2) Schedule of Aged Accounts Receivable, including portion due within ninety (90) days.

(D) **Project Specific Information**: If required, the bidder must submit the project specific information described below:

(1) Statement indicating the number of years of experience the bidder has had and in what type of construction.
(2) Resumes of all key personnel to be involved in the project, including the proposed project superintendent.
(3) List of significant pieces of equipment expected to be used for the contract, and whether such equipment is owned or leased.
(4) Description of work expected to be subcontracted, and to what firms, if known.
(5) List of key material suppliers.
(6) Preliminary bar chart time schedule
(7) Contractor's expected means of financing the project. This should be based on the assumption that the contractor is required to finance 2X average monthly billings throughout the contract period.
(8) Any other issues the contractor sees as impacting his ability to complete the project according to the contract.

In addition to the information described in Sections (A) through (D) above, the bidder MUST submit such additional information as the Commissioner may require, including without limitation, an explanation or justification for specific unit price items.

The bidder is further advised that it may be required to attend a pre-award meeting with DDC representatives. If such a meeting is convened, the bidder will be advised as to any additional material to be provided.

A. PROJECT REFERENCES – CONTRACTS COMPLETED BY THE BIDDER

List all contracts substantially completed within the last 4 years, up to a maximum of 10, in descending order of date of substantial completion.

Project & Location	Contract Type	Contract Amount ($000)	Date Completed	Owner Reference & Tel. No.	Architect/Engineer Reference & Tel. No. if different from owner
New Rochelle High School	Sidewalks, Parking Lots	7,250,800	12/31/18	James Lavato 203-559-9377	CS Arch 845-561-3179
NYCDOT HW2CR18D Citywide for Bx, Qns, Manh.	Milling Ex. Apt.	2,976,162.32	11/17/18	GC Restani; Joe Vaccaro 718-728-0870	NYCDOT 212 MCMU -837-8975 Sudhir Jariwala
NYCDOT HW2CR17GW Citywide 5 Boroughs	Milling Exist Apt	17,146,215.95	9/22/18	212,839.8975	NYCDOT MCMU Sudhir Jariwala

B. PROJECT REFERENCES – CONTRACTS CURRENTLY UNDER CONSTRUCTION BY THE BIDDER

List all contracts currently under construction even if they are not similar to the contract being awarded.

Project & Location	Contract Type	Contract Amount ($000)	Subcontracted to Others ($000)	Uncompleted Portion ($000)	Date Scheduled to Complete	Owner Reference & Tel. No.	Architect/Engineer Reference & Tel. No. if different from owner
D263595 Mount Kisco	Road Work	2.1 M	$250,000	1.6 M	December 2019	NYSDOT	Steve Germinaro 914-606-2149
City of Yonkers Highway Improvements	Sidewalk, Milling & Paving	5,610,000	200,000	3.6 M	June 2019	Yonkers	Carl or DeSerno 914-377-6210
City of New Rochelle	Sidewalk, Milling, Paving	3,175,987	150,000	200,000	April 2019	New Rochelle	Dave Marino 914-654-2137

C. **PROJECT REFERENCES – PENDING CONTRACTS NOT YET STARTED BY THE BIDDER** None

List all contracts awarded to or won by the bidder but not yet started.

Project & Location	Contract Type	Contract Amount ($000)	Date Scheduled to Start	Owner Reference & Tel. No.	Architect/Engineer Reference & Tel. No. if different from owner

OFFICE OF THE MAYOR
BUREAU OF LABOR SERVICES
CONTRACT CERTIFICATE

To be completed if the contract is less than $1,000,000

Contractor: _____

Address: _____

_____

Telephone Number: _____

Name and Title of Signatory: _____

_____

Contracting Agency or Owner: _____

Project Number: _____

Proposed Contract Amount: _____

Description and Address of Proposed Contract: _____

Names of Subcontractors in the amount of 750,000 or more on this contract (if not known at this time, so state indicating that trades will be subcontracted):

_____

_____

_____

I, (fill in name of person signing) _____,
hereby affirm that I am authorized by the above-named contractor to certify that said contractor's proposed contract with the above-named owner or city agency is less than $1,000,000. This affirmation is made in accordance with Executive Order No. 50 (1980) as amended and its implementing regulations.

_____ _____
Date Signature

WILLFUL OR FRAUDULENT FALSIFICATION OF ANY DATA OR INFORMATION SUBMITTED HEREWITH MAY RESULT IN THE TERMINATION OF ANY CONTRACT BETWEEN THE CITY AND THE BIDDER OR CONTRACTOR AND BAR THE BIDDER OR CONTRACTOR FROM PARTICIPATION IN ANY CITY CONTRACT FOR A PERIOD OF UP TO THREE YEARS. FURTHER, SUCH FALSIFICATION MAY RESULT IN CRIMINAL PROSECUTION.

(NO TEXT ON THIS PAGE)

VENDEX COMPLIANCE

(A) Vendex Fees: Pursuant to Procurement Policy Board Rule 2-08(f)(2), the contractor will be charged a fee for the administration of the VENDEX system, including the Vendor Name Check process, if a Vendor Name Check review is required to be conducted by the Department of Investigation. The contractor MUST also be required to pay the applicable required fees for any of its subcontractors for which Vendor Name Check reviews are required. The fee(s) will be deducted from payments made to the contractor under the contract. For contracts with an estimated value of less than or equal to $1,000,000, the fee will be $175 per Vendor Name Check review. For contracts with an estimated value of greater than $1,000,000, the fee will be $350 per Vendor Name Check review.

(B) Confirmation of Vendex Compliance: The Bidder MUST submit this Confirmation of Vendex Compliance to the Department of Design and Construction, Contracts Section, 30-30 Thomson Avenue – First Floor, Long Island City, NY 11101.

Bid Information: The Bidder MUST complete the bid information set forth below.

Name of Bidder: _____
Bidder's Address: _____
Bidder's Telephone Number: _____
Bidder's Fax Number: _____
Date of Bid Opening: _____
PROJECT ID: _____

Vendex Compliance: To demonstrate compliance with Vendex requirements, the Bidder MUST complete either Section (1) or Section (2) below, whichever applies.

(1) **Submission of Vendex Questionnaires to MOCS:** By signing in the space provided below, the Bidder certifies that as of the date specified below, the Bidder has submitted Vendex Questionnaires to the Mayor's Office of Contract Services, Attn: VENDEX, 253 Broadway, 9th Floor, New York, New York 10007.

Date of Submission: _____

By: _____
(Signature of Partner or corporate officer)

Print Name: _____

(2) **Submission of Certification of No Change to DDC:** By signing in the space provided below, the Bidder certifies that it has read the instructions in a "Vendor's Guide to Vendex" and that such instructions do not require the Bidder to submit Vendex Questionnaires. The Bidder has completed **TWO ORIGINALS** of the Certification of No Change set forth on the next page of this Bid Booklet.

By: _____
(Signature of Partner or corporate officer)

Print Name: _____

(NO TEXT ON THIS PAGE)

Certificate of No Change Form

Mayor's Office of Contract Services

- Please submit two completed forms. Copies will not be accepted.
- Please send both copies to the agency that requested it, unless you are advised to send it directly to the Mayor's Office of Contract Services (MOCS).
- A materially false statement willfully or fraudulently made in connection with this certification, and/or the failure to conduct appropriate due diligence in verifying the information that is the subject of this certification, may result in rendering the submitting entity non-responsible for the purpose of contract award.
- A materially false statement willfully or fraudulently made in connection with this certification may subject the person making the false statement to criminal charges

I, _____, being duly sworn, state that I have read
Enter Your Name

and understand all the items contained in the vendor questionnaire and any submission of change as identified on page one of this form and certify that as of this date, these items have not changed. I further certify that, to the best of my knowledge, information and belief, those answers are full, complete, and accurate; and that, to the best of my knowledge, information, and belief, those answers continue to be full, complete, and accurate.

In addition, I further certify on behalf of the submitting vendor that the information contained in the principal questionnaire(s) and any submission of change identified on page two of this form have not changed and have been verified and continue, to the best of my knowledge, to be full, complete and accurate.

I understand that the City of New York will rely on the information supplied in this certification as additional inducement to enter into a contract with the submitting entity.

Vendor Questionnaire *This section is required.*

This refers to the vendor questionnaire(s) submitted for the vendor doing business with the City.

Name of Submitting Entity: _____

Vendor's Address: _____

Vendor's EIN or TIN: _____ Requesting Agency: _____

Are you submitting this Certification as a parent? (Please circle one) Yes No

Signature date on the last full vendor questionnaire signed for the submitting vendor: _____

Signature date on change submission for the submitting vendor: _____

Principal Questionnaire

This section refers to the most recent principal questionnaire submissions.

Mayor's Office of Contract Services

	Principal Name	Date of signature on last full Principal Questionnaire	Date(s) of signature on submission of change
1			
2			
3			
4			
5			
6			

☐ Check if additional changes were submitted and attach a document with the date of additional submissions.

Certification *This section is required.*

This form must be signed and notarized. Please complete this twice. Copies will not be accepted.

Certified By:

_____
Name (Print)

_____
Title

_____
Name of Submitting Entity

_____ _____
Signature *Date*

Notarized By:

_____ _____ _____
Notary Public *County License Issued* *License Number*

Sworn to before me on: _____
Date

Certificate of No Change Form

Mayor's Office of Contract Services

- Please submit two completed forms. Copies will not be accepted.
- Please send both copies to the agency that requested it, unless you are advised to send it directly to the Mayor's Office of Contract Services (MOCS).
- A materially false statement willfully or fraudulently made in connection with this certification, and/or the failure to conduct appropriate due diligence in verifying the information that is the subject of this certification, may result in rendering the submitting entity non-responsible for the purpose of contract award.
- A materially false statement willfully or fraudulently made in connection with this certification may subject the person making the false statement to criminal charges

I, _____, being duly sworn, state that I have read
Enter Your Name

and understand all the items contained in the vendor questionnaire and any submission of change as identified on page one of this form and certify that as of this date, these items have not changed. I further certify that, to the best of my knowledge, information and belief, those answers are full, complete, and accurate; and that, to the best of my knowledge, information, and belief, those answers continue to be full, complete, and accurate.

In addition, I further certify on behalf of the submitting vendor that the information contained in the principal questionnaire(s) and any submission of change identified on page two of this form have not changed and have been verified and continue, to the best of my knowledge, to be full, complete and accurate.

I understand that the City of New York will rely on the information supplied in this certification as additional inducement to enter into a contract with the submitting entity.

Vendor Questionnaire *This section is required.*

This refers to the vendor questionnaire(s) submitted for the vendor doing business with the City.

Name of Submitting Entity: _____

Vendor's Address: _____

Vendor's EIN or TIN: _____ Requesting Agency: _____

Are you submitting this Certification as a parent? (Please circle one) Yes No

Signature date on the last full vendor questionnaire signed for the submitting vendor: _____

Signature date on change submission for the submitting vendor: _____

Principal Questionnaire

This section refers to the most recent principal questionnaire submissions.

Mayor's Office of Contract Services

	Principal Name	Date of signature on last full Principal Questionnaire	Date(s) of signature on submission of change
1			
2			
3			
4			
5			
6			

☐ Check if additional changes were submitted and attach a document with the date of additional submissions.

Certification *This section is required.*

This form must be signed and notarized. Please complete this twice. Copies will not be accepted.

Certified By:

_____
Name (Print)

_____
Title

_____
Name of Submitting Entity

_____ _____
Signature *Date*

Notarized By:

_____ _____ _____
Notary Public *County License Issued* *License Number*

Sworn to before me on: _____
Date

IRAN DIVESTMENT ACT COMPLIANCE RIDER

FOR NEW YORK CITY CONTRACTORS

The Iran Divestment Act of 2012, effective as of April 12, 2012, is codified at State Finance Law ("SFL") §165-a and General Municipal Law ("GML") §103-g. The Iran Divestment Act, with certain exceptions, prohibits municipalities, including the City, from entering into contracts with persons engaged in investment activities in the energy sector of Iran. Pursuant to the terms set forth in SFL §165-a and GML §103-g, a person engages in investment activities in the energy sector of Iran if:

(a) The person provides goods or services of twenty million dollars or more in the energy sector of Iran, including a person that provides oil or liquefied natural gas tankers, or products used to construct or maintain pipelines used to transport oil or liquefied natural gas, for the energy sector of Iran; or

(b) The person is a financial institution that extends twenty million dollars or more in credit to another person, for forty-five days or more, if that person will use the credit to provide goods or services in the energy sector in Iran and is identified on a list created pursuant to paragraph (b) of subdivision three of Section 165-a of the State Finance Law and maintained by the Commissioner of the Office of General Services.

A bid or proposal MUST not be considered for award nor MUST any award be made where the bidder or proposer fails to submit a signed and verified bidder's certification.

Each bidder or proposer must certify that it is not on the list of entities engaged in investment activities in Iran created pursuant to paragraph (b) of subdivision 3 of Section 165-a of the State Finance Law. In any case where the bidder or proposer cannot certify that they are not on such list, the bidder or proposer MUST so state and MUST furnish with the bid or proposal a signed statement which sets forth in detail the reasons why such statement cannot be made. The City of New York may award a bid to a bidder who cannot make the certification on a case by case basis if:

(1) The investment activities in Iran were made before the effective date of this section (i.e., April 12, 2012), the investment activities in Iran have not been expanded or renewed after the effective date of this section and the person has adopted, publicized and is implementing a formal plan to cease the investment activities in Iran and to refrain from engaging in any new investments in Iran: or

(2) The City makes a determination that the goods or services are necessary for the City to perform its functions and that, absent such an exemption, the City would be unable to obtain the goods or services for which the contract is offered. Such determination MUST be made in writing and MUST be a public document.

BIDDER'S CERTIFICATION OF COMPLIANCE WITH IRAN DIVESTMENT ACT

Pursuant to General Municipal Law §103-g, which generally prohibits the City from entering into contracts with persons engaged in investment activities in the energy sector of Iran, the bidder/proposer submits the following certification:

[*Please Check One*]

BIDDER'S CERTIFICATION

☑ By submission of this bid or proposal, each bidder/proposer and each person signing on behalf of any bidder/proposer certifies, and in the case of a joint bid each party thereto certifies as to its own organization, under penalty of perjury, that to the best of its knowledge and belief, that each bidder/proposer is not on the list created pursuant to paragraph (b) of subdivision 3 of Section 165-a of the State Finance Law.

☐ I am unable to certify that my name and the name of the bidder/proposer does not appear on the list created pursuant to paragraph (b) of subdivision 3 of Section 165-a of the State Finance Law. I have attached a signed statement setting forth in detail why I cannot so certify.

SIGNATURE

Richard Perez
PRINTED NAME

President & Sole Officer
TITLE

Sworn to before me this
10th day of Apr. 1, 2019

Notary Public

Dated: 4/1/19

TRACEY A. BOX
NOTARY PUBLIC-STATE OF NEW YORK
No. 01BO5081711
Qualified in New York County
My Commission Expires 07-07-2019

THE CITY OF NEW YORK
DEPARTMENT OF SMALL BUSINESS SERVICES
DIVISION OF LABOR SERVICES
CONTRACT COMPLIANCE UNIT
110 WILLIAMS STREET
NEW YORK, NEW YORK 10038
PHONE: (212) 513-6323
FAX: (212) 618-8879

CONSTRUCTION

EMPLOYMENT

REPORT

(NO TEXT ON THIS PAGE)

The City of New York
Department of Small Business Services
Division of Labor Services
Contract Compliance Unit
110 William Street
New York, New York 10038
Phone: (212) 513 – 6323
Fax: (212) 618-8879

CONSTRUCTION EMPLOYMENT REPORT INSTRUCTIONS

WHO MUST FILE A CONSTRUCTION EMPLOYMENT REPORT

A Construction Employment Report (ER) must be filed if you meet the following conditions:

CONTRACT FUNDING SOURCE	CONTRACTOR	CONTRACT VALUE	SUBMISSION REQUIREMENT
Federal/Federally assisted	Prime and subcontractors	$10,000 or greater	Construction Employment Report
City and state funded	Prime contractor	$1,000,000 or greater	
	Subcontractor	$750,000 or greater	
		Less than $750,000	Less than $750,000 Certificate (City/State Only)

Prime Contractor:

- A general contractor or construction manager selected to perform work on a construction project funded (in whole or in part) by the federal government with a proposed contract value of $10,000 or more.
- A general contractor or construction manager selected to perform work on a construction project funded or assisted by the City of New York with a proposed contract value of $1,000,000 or more.

Subcontractor:

- A subcontractor selected to perform work on a construction project funded (in whole or in part) by the federal government with a proposed contract value of $10,000 or more.
- A subcontractor selected to perform work on a construction project funded or assisted by the City of New York with a proposed contract value of $750,000 or more.
- A subcontractor selected to perform work on a construction project funded or assisted by the City of New York with a proposed contract value of less than $750,000 must submit a "Less than $750,000" certificate.

WHERE TO FILE

Employment Reports must be filed with the City agency awarding the contract. If you are a contractor or subcontractor who will be working for a private developer in receipt of funding or assistance from the City, the ER must be filed with the City agency with jurisdiction over the developer's project.

DLS REVIEW PROCESS

In accordance with Executive Order 50 (EO 50), upon receipt by DLS of a completed ER, DLS conducts a review of the contractor's current employment policies, practices and procedures, as well as perform a statistical analysis of the contractor's workforce, if necessary. The process is as follows:

1. Within five (5) business days, DLS will review the ER for completeness and accuracy. If any information is omitted or incorrect, or if necessary documents are not submitted, the submission shall be deemed incomplete and DLS will inform the contractor. The substantive compliance review does not commence until the submission is complete. **An incomplete submission will delay the review process and may preclude or interrupt the contract approval.**

2. If the ER submission is complete, the compliance review will proceed, resulting in one of the following:

   Certificate of Approval
   The contractor is found to be in compliance with all applicable laws and regulations. The approval is valid for 36 months.

   Continued Approval Certificate
   The contractor has been issued a Certificate of Approval in the previous 36 months which is good for the applicable contract.

   Conditional Certificate of Compliance
   The contractor is required to take corrective actions in order to be in compliance with EO 50. The contractor must meet the conditions within one month of the issue of the Conditional Certificate.

   Determination of Nonperformance
   The contractor has failed to take the required corrective actions stipulated in the Conditional Certificate. A determination of nonperformance may prevent a contractor from receiving an award of a contract.

HOW TO COMPLETE THE EMPLOYMENT REPORT

Contents

General Information
Part I: Contractor/Subcontractor Information
Part II: Employment Policies and Practices
Part III: Contract Bid Information and Projected and Current Workforce Forms
Signature Page

PART I: CONTRACTOR/SUBCONTRACTOR INFORMATION

Questions 7 – 11: Please provide the required contact information for your company. All contracts must have a designated Equal Employment Officer.

Question 12: If you are a subcontractor, you must state the name of the contractor for whom you are providing the construction services.

Question 13: Please provide the number of permanent employees in your company.

Question 14a-g: The Project Identification Number (PIN) and the Contract Registration ID Number (CT#) can be obtained from the City agency. Provide a description of the trade work you will perform on this project and the address where the work will be performed. Subcontractors can obtain this information from the contract they have with the prime contractor.

Questions 15 – 18: If your company has received a valid Certificate of Approval within the past 36 months, been audited by the United States Department of Labor, Office of Federal Contract Compliance Programs (OFCCP), or if your company has submitted an ER for a different contract for which you have not yet received a compliance certificate, then you only need to complete and submit the following:

- General Information section
- Part I - Contractor/Subcontractor Information
- Form B - Projected Workforce
- Signature Page

If your company is currently waiting for an approval on another contract previously submitted, be certain to identify the date on which you submitted the completed Employment Report, the name of the City contracting agency with which the contract was made, and the name and telephone number of the person to whom the Employment Report was submitted.

If your company was issued a Conditional Certificate of Approval, all required corrective actions must have been taken or DLS will not issue a Continued Certificate.

Question 18: If the company was audited by the OFCCP, also provide the following:

- Identify the reviewing OFCCP office by its name and address
- If an unconditional certificate of compliance was issued by the OFCCP, attach a copy of the certificate in lieu of completing Parts II and III;
- Include copies of all corrective actions and documentation of OFCCP's performance; and
- Provide a copy of all stated OFCCP findings.

Question 19: Please provide a copy of any Collective Bargaining Agreement(s) which is negotiated through an employer trade association on behalf of your organization or any of its affiliates.

PART II: EMPLOYMENT POLICIES AND PRACTICES

Remember to label all documents with the question number for which they are submitted.

Questions 20a – j: You must respond to the questions as to whether or not your firm has documents reflecting written policies, benefits and procedures. If so, then you must identify by name each document in which the policy(ies), procedure(s) and benefit(s) is located and submit copies of all of the document(s). If your firm follows unwritten practices or procedures, include an explanation of how they operate. Please submit the most current document(s), including all applicable amendments. Label each document and/or unwritten practice according to the question to which it corresponds (e.g. 20a, 20b, etc.)

Questions 21a – h: Inquires about the manner/methods by which you comply with the requirements of the Immigration Reform and Control Act of 1986 (IRCA).

Question 22: Inquires into where and how I-9 forms are maintained and stored.

Questions 23a – e: Inquires into whether or not there is a requirement that an applicant or employee be subjected to a medical examination at any given time. Copes of the medical information questionnaire and instructions must be submitted with the Employment Report.

Question 24: Indicate the existence and location of all statements of your firm's Equal Employment Opportunity policy and attach a copy of each statement.

Question 25: Submit any current Affirmative Action Plan(s) created pursuant to Executive Order 11246.

Question 26: If your firm or collective bargaining agreement has an internal grievance procedure, indicate this and submit a copy of the policy and procedure. If unwritten, explain its nature and operation. Explain how your firm's procedure addresses EEO complaints.

Question 27: If your employees have used the procedure in the last three (3) years, please submit an explanation in the format indicated below:

1. Number of complaint(s)	2. Nature of the complaint(s)	3. Position(s) of the complainant(s)	4. Was an investigation conducted? Y/N	5. Current status of the disposition

Question 28: Indicate whether in the past three (3) years complaints have been filed with a court of law or administrative agency, naming your company as a defendant (or respondent) in a complaint alleging violation of any anti-discrimination or affirmative action laws. If yes, develop and submit a log to show, for each administrative/and or judicial action filed, the following information:

1. Name(s) of complainant(s)	2. Administrative agency or court in which action was filed	3. Nature of the complaint(s)	4. Current status	5. If not pending, the complaint's disposition

Question 29: Identify each job for which a physical qualification exists. Identify and explain the physical qualification(s) for each stated job. Submit job descriptions for each job and the reasons for the qualifications.

Question 30: Identify each job for which there exists any qualification related to age, race, color, national origin, sex, creed, disability, marital status, sexual orientation or citizenship status. Identify and explain the specific related qualification for each job stated. Submit job descriptions for each job and the reasons for the qualifications.

PART III: CONTRACT BID INFORMATION AND PROJECTED AND CURRENT WORKFORCE FORMS

FORM A: CONTRACT BID INFORMATION – USE OF SUBCONTRACTORS/TRADES

Your projections for the utilization of subcontractors on the proposed contract are to be provided in this section. A chart has been provided for the identification of subcontractors. Information is to be provided to the extent known at the time the ER is filed for review by DLS. If the subcontractor's name is unknown, then write "unknown". Under "ownership", enter the appropriate race/ethnic and gender code. If the contract is federally funded or assisted and the subcontractor is being utilized in accordance with applicable federal requirements with respect to Minority Business Enterprise or Woman Business Enterprise requirements, enter the appropriate code. This will also apply to state funded contracts with similar requirements for minority and female owned businesses.

FORM B: PROJECTED WORKFORCE FOR WORK TO BE PERFORMED ON THIS PROJECT

For each trade to be engaged by your company for this project, enter the projected workforce for Males and Females by trade classification in the charts provided.

FORM C: CURRENT WORKFORCE FOR WORK TO BE PERFORMED ON THIS PROJECT

For each trade *currently* engaged by your company for all work performed in NYC, enter the current workforce for Males and Females by trade classification in the charts provided.

SIGNATURE PAGE

The signatory of this Employment Report and all other documents submitted to DLS must be an official authorized to enter into a binding legal agreement. The signature page must be completed in its entirety and notarized. Only original signatures will be accepted.

The City of New York Department of Small Business Services
Division of Labor Services Contract Compliance Unit
110 William Street, New York, New York 10038
Phone: (212) 513 - 6323
Fax: (212) 618-8879

CONSTRUCTION EMPLOYMENT REPORT

GENERAL INFORMATION

1. Your contractual relationship in this contract is: Prime contractor x Subcontractor ___

1a. Are M/WBE goals attached to this project? Yes X No ___

2. Please check one of the following if your firm would like information on how to certify with the City of New York as a:

___Minority Owned Business Enterprise
___Women Owned Business Enterprise
___Disadvantaged Business Enterprise
___Locally Based Business Enterprise
___Emerging Business Enterprise

2a. If you are certified as an MBE, WBE, LBE, EBE or DBE, what city/state agency are you certified with? NO Are you DBE certified? Yes ___ No ___

3. Please indicate if you would like assistance from SBS in identifying certified M/WBEs for contracting opportunities: Yes ___ No X

4. Is this project subject to a project labor agreement? Yes ___ No X

5. Are you a Union contractor? Yes X No ___ If yes, please list which local(s) you affiliated with Locals 14, 15, 60, 137, 175, 731

6. Are you a Veteran owned company? Yes ___ No X

PART I: CONTRACTOR/SUBCONTRACTOR INFORMATION

7. 20-4530527 (Employer Identification Number or Federal Tax I.D.) davidsonr@pci.corp.org (Email Address)

8. PCI Industries Corp. (Company Name)

9. 550 Franklin Avenue, Mt. Vernon, NY 10550 (Company Address and Zip Code)

10. Richard Mach (Chief Operating Officer) 914.665.4700 (Telephone Number)

11. Hon. Judge Robert Haldman (Designated Equal Opportunity Compliance Officer) 917.400.8277 (Telephone Number)
(If same as Item #10, write "same")

12. Same as #8 - Richard Davidson (Name of Prime Contractor and Contact Person)
(If same as Item #8, write "same")

13. Number of employees in your company: 40

14. Contract information:

(a) DDC — Contracting Agency (City Agency)

(b) $ 9,572,600 — Contract Amount

(c) 84117M 8502017HW0010C — Procurement Identification Number (PIN)

(d) 20181403861 — Contract Registration Number (CT#)

(e) 11/9/18 — Projected Commencement Date

(f) 12/31/19 — Projected Completion Date

(g) Description and location of proposed contract:

Rehab or Replacement of Pedestrian Ramps

Borough of Brooklyn

15. Has your firm been reviewed by the Division of Labor Services (DLS) within the past 36 months and issued a Certificate of Approval? Yes X No___

If yes, attach a copy of certificate.

16. Has DLS within the past month reviewed an Employment Report submission for your company and issued a Conditional Certificate of Approval? Yes___ No X

If yes, attach a copy of certificate.

NOTE: DLS WILL NOT ISSUE A CONTINUED CERTIFICATE OF APPROVAL IN CONNECTION WITH THIS CONTRACT UNLESS THE REQUIRED CORRECTIVE ACTIONS IN PRIOR CONDITIONAL CERTIFICATES OF APPROVAL HAVE BEEN TAKEN.

17. Has an Employment Report already been submitted for a different contract (not covered by this Employment Report) for which you have not yet received compliance certificate?
Yes___ No X If yes,

Date submitted: _____
Agency to which submitted: _____
Name of Agency Person: _____
Contract No: _____
Telephone: _____

18. Has your company in the past 36 months been audited by the United States Department of Labor, Office of Federal Contract Compliance Programs (OFCCP)? Yes___ No X

If yes,

(a) Name and address of OFCCP office.

_____

_____

(b) Was a Certificate of Equal Employment Compliance issued within the past 36 months? Yes___ No___

If yes, attach a copy of such certificate.

(c) Were any corrective actions required or agreed to? Yes___ No___

If yes, attach a copy of such requirements or agreements.

(d) Were any deficiencies found? Yes___ No___

If yes, attach a copy of such findings.

19. Is your company or its affiliates a member or members of an employers' trade association which is responsible for negotiating collective bargaining agreements (CBA) which affect construction site hiring? Yes X No___

If yes, attach a list of such associations and all applicable CBA's.

CIC of Westchester, NY

PART II: DOCUMENTS REQUIRED

20. For the following policies or practices, attach the relevant documents (e.g., printed booklets, brochures, manuals, memoranda, etc.). If the policy(ies) are unwritten, attach a full explanation of the practices. See instructions.

X (a) Health benefit coverage/description(s) for all management, nonunion and union employees (whether company or union administered)

X (b) Disability, life, other insurance coverage/description

X (c) Employee Policy/Handbook

X (d) Personnel Policy/Manual

X (e) Supervisor's Policy/Manual

X (f) Pension plan or 401k coverage/description for all management, nonunion and union employees, whether company or union administered

X (g) Collective bargaining agreement(s).

X (h) Employment Application(s)

X (i) Employee evaluation policy/form(s).

X (j) Does your firm have medical and/or non-medical (i.e. education, military, personal, pregnancy, child care) leave policy?

21. To comply with the Immigration Reform and Control Act of 1986 when and of whom does your firm require the completion of an I-9 Form?

(a) Prior to job offer	Yes___	No X
(b) After a conditional job offer	Yes X	No___
(c) After a job offer	Yes___	No X
(d) Within the first three days on the job	Yes___	No X
(e) To some applicants	Yes___	No X
(f) To all applicants	Yes X	No___
(g) To some employees	Yes___	No X
(h) To all employees	Yes X	No___

22. Explain where and how completed I-9 Forms, with their supportive documentation, are maintained and made accessible.

Maintained by the payroll/office manager & Kept in a locked file

23. Does your firm or any of its collective bargaining agreements require job applicants to take a medical examination? Yes X No___

If yes, is the medical examination given:

(a) Prior to a job offer	Yes___	No X
(b) After a conditional job offer	Yes___	No X
(c) After a job offer	Yes X	No___
(d) To all applicants	Yes___	No X
(e) Only to some applicants	Yes X	No___

If yes, list for which applicants below and attach copies of all medical examination or questionnaire forms and instructions utilized for these examinations.

Local 456 Teamsters collective bargaining agreement requires some to obtain a medical record

24. Do you have a written equal employment opportunity (EEO) policy? Yes X No___

If yes, list the document(s) and page number(s) where these written policies are located.

Employer handbook page 12

25. Does the company have a current affirmative action plan(s) (AAP)
___Minorities and Women
___Individuals with handicaps
___Other. Please specify _____

26. Does your firm or collective bargaining agreement(s) have an internal grievance procedure with respect to EEO complaints? Yes X No___

If yes, please attach a copy of this policy.

If no, attach a report detailing your firm's unwritten procedure for handling EEO complaints.

27. Has any employee, within the past three years, filed a complaint pursuant to an internal grievance procedure or with any official of your firm with respect to equal employment opportunity? Yes___ No X

If yes, attach an internal complaint log. See instructions.

28. Has your firm, within the past three years, been named as a defendant (or respondent) in any administrative or judicial action where the complainant (plaintiff) alleged violation of any anti-discrimination or affirmative action laws? Yes___ No X

If yes, attach a log. See instructions.

29. Are there any jobs for which there are physical qualifications? Yes___ No X

If yes, list the job(s), submit a job description and state the reason(s) for the qualification(s).

30. Are there any jobs for which there are age, race, color, national origin, sex, creed, disability, marital status, sexual orientation, or citizenship qualifications? Yes___ No X

If yes, list the job(s), submit a job description and state the reason(s) for the qualification(s).

SIGNATURE PAGE

I, (print name of authorized official signing) Richard Persico hereby certify that the information submitted herewith is true and complete to the best of my knowledge and belief and submitted with the understanding that compliance with New York City's equal employment requirements, as contained in Chapter 56 of the City Charter, Executive Order No. 50 (1980), as amended, and the implementing Rules and Regulations, is a contractual obligation. I also agree on behalf of the company to submit a certified copy of payroll records to the Division of Labor Services on a monthly basis.

PCJ Industries Corp.
Contractor's Name

Richard Mach — CFO
Name of person who prepared this Employment Report — Title

Richard Persico — President & Sole Officer.
Name of official authorized to sign on behalf of the contractor — Title

914-668-4700
Telephone Number

Signature of authorized official — 4/1/19
Date

If contractors are found to be underutilizing minorities and females in any given trade based on Chapter 56 Section 3H, the Division of Labor Services reserves the right to request the contractor's workforce data and to implement an employment program.

Contractors who fail to comply with the above mentioned requirements or are found to be in noncompliance may be subject to the withholding of final payment.

Willful or fraudulent falsifications of any data or information submitted herewith may result in the termination of the contract between the City and the bidder or contractor and in disapproval of future contracts for a period of up to five years. Further, such falsification may result in civil and/and or criminal prosecution.

To the extent permitted by law and consistent with the proper discharge of DLS' responsibilities under Charter Chapter 56 of the City Charter and Executive Order No. 50 (1980) and the implementing Rules and Regulations, all information provided by a contractor to DLS shall be confidential.

Only original signatures accepted.

Sworn to before me this 1st day of April, 20 19

Notary Public — Authorized Signature — 4/1/19
Date

TRACEY A. BOX
NOTARY PUBLIC-STATE OF NEW YORK
No. 01BO5061711
Qualified in New York County
My Commission Expires 07-07-2019

FOR OFFICIAL USE ONLY: File No._____

FORM A. CONTRACT BID INFORMATION: USE OF SUBCONTRACTORS/TRADES

1. Do you plan to subcontractor work on this contract? Yes ✓ No ___

2. If yes, complete the chart below.

NOTE: All proposed subcontractors with a subcontract in excess of $750,000 must complete an Employment Report for review and approval before the contract may be awarded and work commences.

SUBCONTRACTOR'S NAME*	OWNERSHIP (ENTER APPROPRIATE CODE LETTERS BELOW)	WORK TO BE PERFORMED BY SUBCONTRACTOR	TRADE PROJECTED FOR USE BY SUBCONTRACTOR	PROJECTED DOLLAR VALUE OF SUBCONTRACT
unknown at this time - see page 15 of schedule B				

***If subcontractor is presently unknown, please enter the trade (craft name).**

OWNERSHIP CODES
- W: White
- B: Black
- H: Hispanic
- A: Asian
- N: Native American
- F: Female

FORM B: PROJECTED WORKFORCE

TRADE CLASSIFICATION CODES

(J) Journeylevel Workers
(A) Apprentice
(H) Helper
(TRN) Trainee
(TOT) Total by Column

For each trade to be engaged by your company for this project, enter the projected workforce for Males and Females by trade classification on the charts below.

Trade: Laborers

Union Affiliation, if applicable: 60, 175, 731

Total (Col. #1-10): 15

Total Minority, Male & Female (Col. #2,3,4,5,7,8,9, & 10): 11

Total Female (Col. #6 – 10): 0

	MALES					FEMALES				
	(1) White Non Hisp.	(2) Black Non Hisp.	(3) Hisp.	(4) Asian	(5) Native Amer.	(6) White Non Hisp.	(7) Black Non Hisp.	(8) Hisp.	(9) Asian	(10) Native Amer.
J	4	1	10							
H										
A										
TRN										
TOT	4	1	10							

What are the recruitment sources for you projected hires (i.e., unions, government employment office, job tap center, community outreach)?

Union

FOR OFFICIAL USE ONLY: File No.

FORM B: PROJECTED WORKFORCE

Trade: Operating Engrs

Union Affiliation, if applicable: 14, 15, 137

Total (Col. #1-10): 6

Total Minority, Male & Female (Col. #2,3,4,5,7,8,9, & 10): 2

Total Female (Col. #6 – 10): 0

	MALES					FEMALES				
	(1) White Non Hisp.	(2) Black Non Hisp.	(3) Hisp.	(4) Asian	(5) Native Amer.	(6) White Non Hisp.	(7) Black Non Hisp.	(8) Hisp.	(9) Asian	(10) Native Amer.
J	4	1	1							
H										
A										
TRN										
TOT	4	1	1							

What are the recruitment sources for you projected hires (i.e., unions, government employment office, job tap center, community outreach)?

Union

FORM B: PROJECTED WORKFORCE

Trade: Teamsters

Union Affiliation, if applicable: 456, 282

Total (Col. #1-10): 12

Total Minority, Male & Female (Col. #2,3,4,5,7,8,9, & 10): 9

Total Female (Col. #6 – 10): 1

	MALES					FEMALES				
	(1) White Non Hisp.	(2) Black Non Hisp.	(3) Hisp.	(4) Asian	(5) Native Amer.	(6) White Non Hisp.	(7) Black Non Hisp.	(8) Hisp.	(9) Asian	(10) Native Amer.
J	3	6	3							
H										
A										
TRN										
TOT	3	6	3							

What are the recruitment sources for you projected hires (i.e., unions, government employment office, job tap center, community outreach)?

Unions

FORM C: CURRENT WORKFORCE

TRADE CLASSIFICATION CODES

(J) Journeylevel Workers (A) Apprentice
(H) Helper (TRN) Trainee
(TOT) Total by Column

For each trade currently engaged by your company for all work performed in New York City, enter the current workforce for Males and Females by trade classification on the charts below.

Trade: Laborer

Union Affiliation, if applicable: 40, 175, 731

Total (Col. #1-10): 15

Total Minority, Male & Female (Col. #2,3,4,5,7,8,9, & 10): 11

Total Female (Col. #6 – 10): 0

	MALES					FEMALES				
	(1) White Non Hisp.	(2) Black Non Hisp.	(3) Hisp.	(4) Asian	(5) Native Amer.	(6) White Non Hisp.	(7) Black Non Hisp.	(8) Hisp.	(9) Asian	(10) Native Amer.
J	4	1	10							
H										
A										
TRN										
TOT	4	1	10							

What are the recruitment sources for you projected hires (i.e., unions, government employment office, job tap center, community outreach)?

Unions

FOR OFFICIAL USE ONLY: File No.

FORM C: CURRENT WORKFORCE

Trade: Operating Engrs

Union Affiliation, if applicable: 14, 15, 137

Total (Col. #1-10): 2

Total Minority, Male & Female (Col. #2,3,4,5,7,8,9, & 10): 1

Total Female (Col. #6 – 10): 0

MALES

	(1) White Non Hisp.	(2) Black Non Hisp.	(3) Hisp.	(4) Asian	(5) Native Amer.
J	1	1	0		
H					
A					
TRN					
TOT	1	1	0		

FEMALES

	(6) White Non Hisp.	(7) Black Non Hisp.	(8) Hisp.	(9) Asian	(10) Native Amer.

What are the recruitment sources for you projected hires (i.e., unions, government employment office, job tap center, community outreach)?

Union

FOR OFFICIAL USE ONLY: File No.

The City of New York Department of Small Business Services
Division of Labor Services Contract Compliance Unit
110 William Street, New York, New York 10038
Phone: (212) 513 – 6323
Fax: (212) 618-8879

CONSTRUCTION EMPLOYMENT REPORT

GENERAL INFORMATION

1. Your contractual relationship in this contract is: Prime contractor____ Subcontractor__x__

1a. Are M/WBE goals attached to this project? Yes ____ No ____

2. Please check one of the following if your firm would like information on how to certify with the City of New York as a:

___Minority Owned Business Enterprise
___Women Owned Business Enterprise
___Disadvantaged Business Enterprise
___Locally Based Business Enterprise
___Emerging Business Enterprise

2a. If you are certified as an **MBE**, **WBE**, **LBE, EBE** or **DBE**, what city/state agency are you certified with? _____ Are you DBE certified? Yes ____ No ____

3. Please indicate if you would like assistance from SBS in identifying certified M/WBEs for contracting opportunities: Yes___ No___

4. Is this project subject to a project labor agreement? Yes ____ No ____

5. Are you a Union contractor? Yes ____ No ____ If yes, please list which local(s) you affiliated with _____

6. Are you a Veteran owned company? Yes ____ No ____

PART I: CONTRACTOR/SUBCONTRACTOR INFORMATION

7. _____
Employer Identification Number or Federal Tax I.D. Email Address

8. _____
Company Name

9. _____
Company Address and Zip Code

10. _____
Chief Operating Officer Telephone Number

11. _____
Designated Equal Opportunity Compliance Officer Telephone Number
(If same as Item #10, write "same")

12. _____
Name of Prime Contractor and Contact Person
(If same as Item #8, write "same")

13. Number of employees in your company: _____

14. Contract information:

(a) _____ Contracting Agency (City Agency)

(b) _____ Contract Amount

(c) _____ Procurement Identification Number (PIN)

(d) _____ Contract Registration Number (CT#)

(e) _____ Projected Commencement Date

(f) _____ Projected Completion Date

(g) Description and location of proposed contract:

_____

_____

15. Has your firm been reviewed by the Division of Labor Services (DLS) within the past 36 months and issued a Certificate of Approval? Yes___ No___

If yes, attach a copy of certificate.

16. Has DLS within the past month reviewed an Employment Report submission for your company and issued a Conditional Certificate of Approval? Yes___ No___

If yes, attach a copy of certificate.

NOTE: DLS WILL NOT ISSUE A CONTINUED CERTIFICATE OF APPROVAL IN CONNECTION WITH THIS CONTRACT UNLESS THE REQUIRED CORRECTIVE ACTIONS IN PRIOR CONDITIONAL CERTIFICATES OF APPROVAL HAVE BEEN TAKEN.

17. Has an Employment Report already been submitted for a different contract (not covered by this Employment Report) for which you have not yet received compliance certificate?
Yes___ No___ If yes,

Date submitted: _____
Agency to which submitted: _____
Name of Agency Person: _____
Contract No: _____
Telephone: _____

18. Has your company in the past 36 months been audited by the United States Department of Labor, Office of Federal Contract Compliance Programs (OFCCP)? Yes___ No___

If yes,

(a) Name and address of OFCCP office.

_____

_____

(b) Was a Certificate of Equal Employment Compliance issued within the past 36 months? Yes___ No___

If yes, attach a copy of such certificate.

(c) Were any corrective actions required or agreed to? Yes___ No___

If yes, attach a copy of such requirements or agreements.

(d) Were any deficiencies found? Yes___ No___

If yes, attach a copy of such findings.

19. Is your company or its affiliates a member or members of an employers' trade association which is responsible for negotiating collective bargaining agreements (CBA) which affect construction site hiring? Yes___ No___

If yes, attach a list of such associations and all applicable CBA's.

PART II: DOCUMENTS REQUIRED

20. For the following policies or practices, attach the relevant documents (e.g., printed booklets, brochures, manuals, memoranda, etc.). If the policy(ies) are unwritten, attach a full explanation of the practices. See instructions.

___ (a) Health benefit coverage/description(s) for all management, nonunion and union employees (whether company or union administered)

___ (b) Disability, life, other insurance coverage/description

___ (c) Employee Policy/Handbook

___ (d) Personnel Policy/Manual

___ (e) Supervisor's Policy/Manual

___ (f) Pension plan or 401k coverage/description for all management, nonunion and union employees, whether company or union administered

___ (g) Collective bargaining agreement(s).

___ (h) Employment Application(s)

___ (i) Employee evaluation policy/form(s).

___ (j) Does your firm have medical and/or non-medical (i.e. education, military, personal, pregnancy, child care) leave policy?

21. To comply with the Immigration Reform and Control Act of 1986 when and of whom does your firm require the completion of an I-9 Form?

(a) Prior to job offer	Yes___ No___
(b) After a conditional job offer	Yes___ No___
(c) After a job offer	Yes___ No___
(d) Within the first three days on the job	Yes___ No___
(e) To some applicants	Yes___ No___
(f) To all applicants	Yes___ No___
(g) To some employees	Yes___ No___
(h) To all employees	Yes___ No___

22. Explain where and how completed I-9 Forms, with their supportive documentation, are maintained and made accessible.

_____

_____

23. Does your firm or any of its collective bargaining agreements require job applicants to take a medical examination? Yes___ No___

If yes, is the medical examination given:

(a) Prior to a job offer	Yes___ No___
(b) After a conditional job offer	Yes___ No___
(c) After a job offer	Yes___ No___
(d) To all applicants	Yes___ No___
(e) Only to some applicants	Yes___ No___

If yes, list for which applicants below and attach copies of all medical examination or questionnaire forms and instructions utilized for these examinations.

_____

_____

24. Do you have a written equal employment opportunity (EEO) policy? Yes___ No___

If yes, list the document(s) and page number(s) where these written policies are located.

_____

_____

25. Does the company have a current affirmative action plan(s) (AAP)

_____Minorities and Women

_____Individuals with handicaps

_____Other. Please specify _____

26. Does your firm or collective bargaining agreement(s) have an internal grievance procedure with respect to EEO complaints? Yes___ No___

If yes, please attach a copy of this policy.

If no, attach a report detailing your firm's unwritten procedure for handling EEO complaints.

27. Has any employee, within the past three years, filed a complaint pursuant to an internal grievance procedure or with any official of your firm with respect to equal employment opportunity? Yes___ No___

If yes, attach an internal complaint log. See instructions.

28. Has your firm, within the past three years, been named as a defendant (or respondent) in any administrative or judicial action where the complainant (plaintiff) alleged violation of any anti-discrimination or affirmative action laws? Yes___ No___

If yes, attach a log. See instructions.

29. Are there any jobs for which there are physical qualifications? Yes___ No___

If yes, list the job(s), submit a job description and state the reason(s) for the qualification(s).

_____

_____

30. Are there any jobs for which there are age, race, color, national origin, sex, creed, disability, marital status, sexual orientation, or citizenship qualifications? Yes___ No___

If yes, list the job(s), submit a job description and state the reason(s) for the qualification(s).

_____

_____

SIGNATURE PAGE

I, (print name of authorized official signing)_____ hereby certify that the information submitted herewith is true and complete to the best of my knowledge and belief and submitted with the understanding that compliance with New York City's equal employment requirements, as contained in Chapter 56 of the City Charter, Executive Order No. 50 (1980), as amended, and the implementing Rules and Regulations, is a contractual obligation. I also agree on behalf of the company to submit a certified copy of payroll records to the Division of Labor Services on a monthly basis.

_____

Contractor's Name

_____

Name of person who prepared this Employment Report Title

_____

Name of official authorized to sign on behalf of the contractor Title

_____

Telephone Number

_____

Signature of authorized official Date

If contractors are found to be underutilizing minorities and females in any given trade based on Chapter 56 Section 3H, the Division of Labor Services reserves the right to request the contractor's workforce data and to implement an employment program.

Contractors who fail to comply with the above mentioned requirements or are found to be in noncompliance may be subject to the withholding of final payment.

Willful or fraudulent falsifications of any data or information submitted herewith may result in the termination of the contract between the City and the bidder or contractor and in disapproval of future contracts for a period of up to five years. Further, such falsification may result in civil and/and or criminal prosecution.

To the extent permitted by law and consistent with the proper discharge of DLS' responsibilities under Charter Chapter 56 of the City Charter and Executive Order No. 50 (1980) and the implementing Rules and Regulations, all information provided by a contractor to DLS shall be confidential.

Only original signatures accepted.

Sworn to before me this _____ day of _____ 20 _____

_____

Notary Public Authorized Signature Date

FORM A. CONTRACT BID INFORMATION: USE OF SUBCONTRACTORS/TRADES

1. Do you plan to subcontractor work on this contract? Yes___ No___

2. If yes, complete the chart below.

NOTE: All proposed subcontractors with a subcontract in excess of $750,000 must complete an Employment Report for review and approval before the contract may be awarded and work commences.

SUBCONTRACTOR'S NAME*	OWNERSHIP (ENTER APPROPRIATE CODE LETTERS BELOW)	WORK TO BE PERFORMED BY SUBCONTRACTOR	TRADE PROJECTED FOR USE BY SUBCONTRACTOR	PROJECTED DOLLAR VALUE OF SUBCONTRACT

***If subcontractor is presently unknown, please enter the trade (craft name).**

OWNERSHIP CODES
- W: White
- B: Black
- H: Hispanic
- A: Asian
- N: Native American
- F: Female

FORM B: PROJECTED WORKFORCE

TRADE CLASSIFICATION CODES

(J) Journeylevel Workers
(H) Helper
(TOT) Total by Column
(A) Apprentice
(TRN) Trainee

For each trade to be engaged by your company for this project, enter the projected workforce for Males and Females by trade classification on the charts below.

Trade: _____

Union Affiliation, if applicable _____

Total (Col. #1-10): _____

Total Minority, Male & Female (Col. #2,3,4,5,7,8,9, & 10): _____

Total Female (Col. #6 – 10): _____

	MALES					FEMALES				
	(1) White Non Hisp.	(2) Black Non Hisp.	(3) Hisp.	(4) Asian	(5) Native Amer.	(6) White Non Hisp.	(7) Black Non Hisp.	(8) Hisp.	(9) Asian	(10) Native Amer.
J										
H										
A										
TRN										
TOT										

What are the recruitment sources for you projected hires (i.e., unions, government employment office, job tap center, community outreach)?

_____

_____

FOR OFFICIAL USE ONLY: File No._____

FORM B: PROJECTED WORKFORCE

Trade: _____

Union Affiliation, if applicable _____

Total (Col. #1-10): _____

Total Minority, Male & Female (Col. #2,3,4,5,7,8,9, & 10): _____

Total Female (Col. #6 – 10): _____

	MALES					FEMALES				
	(1) White Non Hisp.	(2) Black Non Hisp.	(3) Hisp.	(4) Asian	(5) Native Amer.	(6) White Non Hisp.	(7) Black Non Hisp.	(8) Hisp.	(9) Asian	(10) Native Amer.
J										
H										
A										
TRN										
TOT										

What are the recruitment sources for you projected hires (i.e., unions, government employment office, job tap center, community outreach)?

_____

_____

FORM C: CURRENT WORKFORCE

TRADE CLASSIFICATION CODES

(J) Journeylevel Workers
(H) Helper
(TOT) Total by Column
(A) Apprentice
(TRN) Trainee

For each trade currently engaged by your company for all work performed in New York City, enter the current workforce for Males and Females by trade classification on the charts below.

Trade: _____

Union Affiliation, if applicable _____

Total (Col. #1-10): _____

Total Minority, Male & Female (Col. #2,3,4,5,7,8,9, & 10): _____

Total Female (Col. #6 – 10): _____

	MALES					FEMALES				
	(1) White Non Hisp.	(2) Black Non Hisp.	(3) Hisp.	(4) Asian	(5) Native Amer.	(6) White Non Hisp.	(7) Black Non Hisp.	(8) Hisp.	(9) Asian	(10) Native Amer.
J										
H										
A										
TRN										
TOT										

What are the recruitment sources for you projected hires (i.e., unions, government employment office, job tap center, community outreach)?

_____

_____

FOR OFFICIAL USE ONLY: File No._____

FORM C: CURRENT WORKFORCE

Trade: _____

Union Affiliation, if applicable _____

Total (Col. #1-10): _____

Total Minority, Male & Female (Col. #2,3,4,5,7,8,9, & 10): _____

Total Female (Col. #6 – 10): _____

	MALES					FEMALES				
	(1) White Non Hisp.	(2) Black Non Hisp.	(3) Hisp.	(4) Asian	(5) Native Amer.	(6) White Non Hisp.	(7) Black Non Hisp.	(8) Hisp.	(9) Asian	(10) Native Amer.
J										
H										
A										
TRN										
TOT										

What are the recruitment sources for you projected hires (i.e., unions, government employment office, job tap center, community outreach)?

_____

_____

(NO TEXT ON THIS PAGE)

The City of New York Department of Small Business Services
Division of Labor Services Contract Compliance Unit
110 William Street, New York, New York 10038
Phone: (212) 513 – 6323 Fax: (212) 618-8879

Date _____ **File Number** _____

LESS THAN $750,000 SUBCONTRACT CERTIFICATE (CITY, STATE AND ICIP ONLY)

Are you currently certified as one of the following? Please check yes or no:

MBE Yes ___No ___ WBE Yes ___No ___ LBE Yes ___No ___

DBE Yes___No___ EBE Yes ___ No ___

If you are certified as an MBE, WBE, LBE, EBE or DBE, what city/state agency are you certified with?

_____

Please check one of the following if your firm would like information on how to certify with the City of New York as a:

___Minority Owned Business Enterprise ___Locally based Business Enterprise

___Women Owned Business Enterprise ___Emerging Business Enterprise

___Disadvantaged Business Enterprise

_____
Company Name Employer Identification Number or Federal Tax I.D

_____
Company Address and Zip Code

_____
Contact Person (First Name, Last Name) Telephone Number

_____
Fax Number E-mail Address

Description and location of proposed subcontract:_____
_____
_____

Are you a Union contractor? Yes ____ No ____ If yes, please list which local(s) you affiliated with

_____

Are you a Veteran owned company? Yes ____ No ____

_____ _____
Procurement Identification Number (PIN) Contract Registration Number (CT#)
(City contracts only) (City contracts only)

Revised 8/13
FOR OFFICIAL USE ONLY: File No._____

Block and Lot Number
(ICIP projects only)

Contract Amount

I, (print name of authorized official signing)_____ hereby certify that I am authorized by the above-named subcontractor to certify that said subcontractor's proposed contract with the above named owner or City agency is less than $750,000. This affirmation is made in accordance with NYC Charter Chapter 56, Executive Order No. 50 (1980) and the implementing Rules.

Willful or fraudulent falsifications of any data or information submitted herewith may result in the termination of the contract between the City and the bidder or contractor and in disapproval of future contracts for a period of up to five years. Further, such falsification may result in civil and/and or criminal prosecution.

Signature of authorized official

Date

Only original signatures accepted.

Sworn to before me this _____ day of _____ 20 _____

Notary Public

Authorized Signature

Date

Revised 8/13
FOR OFFICIAL USE ONLY: File No._____

Department of Design and Construction

INFRASTRUCTURE DIVISION
BUREAU OF DESIGN

VOLUME 1 OF 3

PROJECT ID: GCJA03-2B

CONSTRUCTION OF RIGHT-OF-WAY
GREEN INFRASTRUCTURE IN THE CSO TRIBUTARY AREA
JAM-003 AND JAM-003A

Together With All Work Incidental Thereto

BOROUGH OF QUEENS
CITY OF NEW YORK

_____

Contractor

_____

Dated_____, **20**___

_____

Department of Design and Construction

THE CITY OF NEW YORK
DEPARTMENT OF DESIGN AND CONSTRUCTION
DIVISION OF INFRASTRUCTURE

30-30 THOMSON AVENUE
LONG ISLAND CITY, NEW YORK 11101-3045
TELEPHONE (718) 391-1000
WEBSITE www1.nyc.gov/site/ddc/index.page

VOLUME 2 OF 3

INFORMATION FOR BIDDERS
CONTRACT
PERFORMANCE AND PAYMENT BONDS
PREVAILING WAGE SCHEDULE

FOR FURNISHING ALL LABOR AND MATERIALS NECESSARY AND REQUIRED FOR:

PROJECT ID: GCJA03-2B

CONSTRUCTION OF RIGHT-OF-WAY GREEN INFRASTRUCTURE IN THE CSO TRIBUTARY AREA JAM-003 AND JAM-003A

Together With All Work Incidental Thereto

BOROUGH OF QUEENS
CITY OF NEW YORK

FOR THE DEPARTMENT OF ENVIRONMENTAL PROTECTION
PREPARED BY

NV5

DECEMBER 17, 2018

19-030

Department of Design and Construction

THE CITY OF NEW YORK
DEPARTMENT OF DESIGN AND CONSTRUCTION
DIVISION OF INFRASTRUCTURE

30-30 THOMSON AVENUE
LONG ISLAND CITY, NEW YORK 11101-3045
TELEPHONE (718) 391-1000
WEBSITE www1.nyc.gov/site/ddc/index.page

VOLUME 2 OF 3

INFORMATION FOR BIDDERS
CONTRACT
PERFORMANCE AND PAYMENT BONDS
PREVAILING WAGE SCHEDULE

FOR FURNISHING ALL LABOR AND MATERIALS NECESSARY AND REQUIRED FOR:

FOR THE DEPARTMENT OF ENVIRONMENTAL PROTECTION
PREPARED BY

NV5

DECEMBER 17, 2018

CITY OF NEW YORK

DEPARTMENT OF
DESIGN AND CONSTRUCTION
DIVISION OF INFRASTRUCTURES

INFORMATION FOR BIDDERS

JUNE 2015

(NO TEXT ON THIS PAGE)

CITY OF NEW YORK CITY
DEPARTMENT OF DESIGN AND CONSTRUCTION
INFORMATION FOR BIDDERS

TABLE OF CONTENTS

SECTION 1.	DESCRIPTION AND LOCATION OF WORK	1
SECTION 2.	TIME AND PLACE FOR RECEIPT OF BIDS	1
SECTION 3.	DEFINITIONS	1
SECTION 4.	INVITATION FOR BIDS AND CONTRACT DOCUMENTS	1
SECTION 5.	PRE-BID CONFERENCE	2
SECTION 6.	AGENCY CONTACT	2
SECTION 7.	BIDDER'S OATH	2
SECTION 8.	EXAMINATION AND VIEWING OF SITE, CONSIDERATION OF OTHER SOURCES OF INFORMATION AND CHANGED CONDITIONS	2
SECTION 9.	EXAMINATION OF PROPOSED CONTRACT	3
SECTION 10.	FORM OF BID	3
SECTION 11.	IRREVOCABILITY OF BID	3
SECTION 12.	ACKNOWLEDGMENT OF AMENDMENTS	4
SECTION 13.	BID SAMPLES AND DESCRIPTIVE LITERATURE	4
SECTION 14.	PROPRIETARY INFORMATION/TRADE SECRETS	4
SECTION 15.	PRE-OPENING MODIFICATION OR WITHDRAWAL OF BIDS	4
SECTION 16.	BID EVALUATION AND AWARD	4
SECTION 17.	LATE BIDS, LATE WITHDRAWALS AND LATE MODIFICATIONS	5
SECTION 18.	WITHDRAWAL OF BIDS.	5
SECTION 19.	MISTAKE IN BIDS	5
SECTION 20.	LOW TIE BIDS	6
SECTION 21.	REJECTION OF BIDS	6
SECTION 22.	RIGHT TO APPEAL DETERMINATIONS OF NON-RESPONSIVENESS OR NON-RESPONSIBILITY AND RIGHT TO PROTEST SOLICITATIONS AND AWARD	7
SECTION 23.	AFFIRMATIVE ACTION AND EQUAL EMPLOYMENT OPPORTUNITY	7
SECTION 24.	VENDEX QUESTIONNAIRES	7
SECTION 25.	COMPLAINTS ABOUT THE BID PROCESS	8
SECTION 26.	BID, PERFORMANCE AND PAYMENT SECURITY	8
SECTION 27.	FAILURE TO EXECUTE CONTRACT	9
SECTION 28.	BIDDER RESPONSIBILITIES AND QUALIFICATIONS	9
SECTION 29.	EMPLOYMENT REPORT	10
SECTION 30.	LABOR LAW REQUIREMENTS	10
SECTION 31.	INSURANCE	10
SECTION 32.	LUMP SUM CONTRACTS	11
SECTION 33.	UNIT PRICE CONTRACTS	11
SECTION 34.	EXCISE TAX	11
SECTION 35.	LICENSES AND PERMITS	11
SECTION 36.	MULTIPLE PRIME CONTRACTORS	11
SECTION 37.	LOCALLY BASED ENTERPRISE REQUIREMENTS (LBE)	12
SECTION 38.	BID SUBMISSION REQUIREMENTS	13
SECTION 39.	COMPTROLLER'SCERTIFICATE	14
SECTION 40.	PROCUREMENT POLICY BOARD RULES	14
SECTION 41.	DDC SAFETY REQUIREMENTS	14

(NO TEXT ON THIS PAGE)

INFORMATION FOR BIDDERS

1. Description and Location of Work

The description and location of the work for which bids are requested are specified in Attachment 1, "Bid Information". Attachment 1 is included as page A-1 of the Bid Booklet.

2. Time and Place for Receipt of Bids

Sealed bids shall be received on or before the date and hour specified in Attachment 1, at which time they will be publicly opened and read aloud in the presence of the Commissioner or his or her representative, and any bidders who may desire to be present.

3. Definitions

The definitions set forth in the Procurement Policy Board Rules shall apply to this Invitation For Bids.

4. Invitation For Bids and Contract Documents

(A) Except for titles, sub-titles, headings, running headlines, tables of contents and indices (all of which are printed herein merely for convenience) the following, except for such portions thereof as may be specifically excluded, shall be deemed to be part of the Contract and the Invitation for Bids.

(1) All provisions required by law to be inserted in this Contract, whether actually inserted or not
(2) The Contract Drawings and Specifications
(3) The General Conditions, the General Requirements and the Special Conditions, if any
(4) The Contract
(5) The Information for Bidders; Request for Proposals; Notice of Solicitation and Proposal For Bids; Bid or Proposal, and, if used, the Bid Booklet
(6) The Budget Director's Certificate; all Addenda issued prior to the receipt of the bids; the Notice of Award; Performance and Payment Bonds, if required; and the Notice to Proceed with the Work.

(B) For particulars as to this procurement, including quantity and quality of the purchase, extent of the work or labor to be performed, delivery and performance schedule, and any other special instructions, prospective bidders are referred to the Invitation For Bids Documents. A copy of such documents can be obtained at the location set forth in Attachment 1.

(C) Deposit for Copy of Invitation For Bids Documents: Prospective bidders may obtain a copy of the Invitation For Bids Documents by complying with the conditions set forth in the Notice of Solicitation. The deposit must be in the form of a check or money order made payable to the City of New York, and drawn upon a state or national bank or trust company, or a check of such bank or trust company signed by a duly authorized officer thereof.

(D) Return of Invitation For Bids Documents: All Invitation For Bids Documents must be returned to the Department upon request. If the bidder elects not to submit a bid thereunder, the

Invitation For Bids Documents shall be returned to the Department, along with a statement that no bid will be submitted.

(E) Return of Deposit: Such deposit will be returned within 30 days after the award of the contract or the rejection of all bids as set forth in the advertisement, provided the Invitation For Bids Documents are returned to the location specified in Attachment 1, in physical condition satisfactory to the Commissioner.

(F) Additional Copies: Additional copies of the Invitation For Bids Documents may be obtained, subject to the conditions set forth in the advertisement for bids.

5. Pre-Bid Conference

A pre-bid conference shall be held as set forth in Attachment 1. Nothing stated at the pre-bid conference shall change the terms or conditions of the Invitation For Bids Documents, unless a change is made by written amendment as provided in Section 9 below. Failure to attend a mandatory pre-bid conference shall constitute grounds for the rejection of the bid.

6. Agency Contact

Any questions or correspondence relating to this bid solicitation shall be addressed to the Agency Contact person specified in Attachment 1.

7. Bidder's Oath

(A) The bid-shall be properly signed by an authorized representative of the bidder and the bid shall be verified by the written oath of the authorized representative who signed the bid, that the several matters stated and information furnished therein are in all aspects true.

(B) A materially false statement willfully or fraudulently made in connection with the bid or any of the forms completed and submitted with the bid may result in the termination of any Contract between the City and the Bidder. As a result, the Bidder may be barred from participating in future City contracts as well as be subject to possible criminal prosecution.

8. Examination and Viewing of Site

(A) Pre-Bidding (Investigation) Viewing of Site -Bidders must carefully view and examine the site of the proposed work, as well as its adjacent area, and seek other usual sources of information, for they will be conclusively presumed to have full knowledge of any and all conditions on, about or above the site relating to or affecting in any way the performance of the work to be done under the Contract which were or should have been indicated to a reasonably prudent bidder. To arrange a date for visiting the work site, bidders are to contact the Agency Contact person specified in Attachment 1.

(B) Should the contractor encounter during the progress of the work subsurface conditions at the site materially differing from any shown on the Contract Drawings or indicated in the Specifications or such subsurface conditions as could not reasonably have been anticipated by the contractor and were not anticipated by the City, which conditions will materially affect the cost of the work to be done under the

Contract, the attention of the Commissioner must be called immediately to such conditions before they are disturbed. The Commissioner shall thereupon promptly investigate the conditions. If he finds that they do so materially differ, or that they could not have been reasonably anticipated by the contractor and were not anticipated by the City, the Contract may be modified with his written approval.

9. Examination of Proposed Contract

(A) Request for Interpretation or Correction: Prospective bidders must examine the Contract Documents carefully and before bidding must request the Commissioner in writing for an interpretation or correction of every patent ambiguity, inconsistency or error therein which should have been discovered by a reasonably prudent bidder. Such interpretation or correction, as well as any additional contract provisions the Commissioner may decide to include, will be issued in writing by the Commissioner as an addendum to the Contract, which will be transmitted to each person recorded as having received a copy of the Contract Documents from the Department. Transmission of such addendum will be by mail, e-mail, facsimile or hand delivery. Such addendum will also be posted at the place where the Contract Documents are available for the inspection of prospective bidders. Upon transmission as provided for herein, such addendum shall become a part of the Contract Documents, and binding on all bidders, whether or not actual notice of such addendum is shown.

(B) Only Commissioner's Interpretation or Correction Binding: Only the written interpretation or correction so given by the Commissioner shall be binding, and prospective bidders are warned that no other officer, agent or employee of the City is authorized to give information concerning, or to explain or interpret, the Contract.

(C) Documents given to a subcontractor for the purpose of soliciting the subcontractor's bid shall include either a copy of the bid cover sheet or a separate information sheet setting forth the project name, the Contract number (if available), the contracting agency and the Project's location.

10. Form of Bid

Each bid must be submitted upon the prescribed form and must contain: a) the name, residence and place of business of the person or persons making the same; b) the names of all persons interested therein, and if no other person is so interested, such fact must be distinctly stated; c) a statement to the effect that it is made without any connection with any other person making a bid for the same purpose and that it is in all respects fair and without collusion or fraud; d) a statement that no Council member or other officer or employee or person whose salary is payable in whole or part from the City Treasury is directly or indirectly interested therein or in the supplies, materials or equipment and work or labor to which it relates, or in any portion of the profits thereof; e) a statement that the bidder is not in arrears to the City or to any agency upon a debt or contract or taxes, and is not a defaulter as surety or otherwise upon any obligation to the City to any agency thereof, except as set forth in the bid.

THE BID SHALL BE TYPEWRITTEN OR WRITTEN LEGIBLY IN INK. THE BID SHALL BE SIGNED IN INK. ERASURES OR ALTERATIONS SHALL BE INITIALED BY THE SIGNER IN INK. FAILURE TO CONFORM TO THE REQUIREMENTS OF THIS SECTION 10 SHALL RESULT IN THE REJECTION OF THE BID.

11. Irrevocability of Bid

The prices set forth in the bid cannot be revoked and shall be effective until the award of the Contract, unless the bid is withdrawn as provided for in Sections 15 and 18 below.

12. Acknowledgment of Amendments

The receipt of any amendment to the Contract Documents shall be acknowledged by the bidder in its bid submission.

13. Bid Samples and Descriptive Literature

Bid samples and descriptive literature shall not be submitted by the bidder, unless expressly requested elsewhere in the Contract or Contract Documents. Any unsolicited bid samples or descriptive literature which are submitted shall not be examined or tested and shall not be deemed to vary any of the provisions of this Contract.

14. Proprietary Information/Trade Secrets

(A) The bidder shall identify those portions of the bid which it deems to be confidential, proprietary information or trade secrets, and provide justification why such materials shall not be disclosed by the City. All such materials shall be clearly indicated by stamping the pages on which such information appears, at the top and bottom thereof with the word "Confidential". Such materials stamped "Confidential" must be easily separable from the non-confidential sections of the bid.

(B) All such materials so indicated shall be reviewed by the Agency and any decision not to honor a request for confidentiality shall be communicated in writing to the bidder. For those bids which are unsuccessful, all such confidential materials shall be returned to the bidder. Prices, makes and model or catalog numbers of the items offered, deliveries, and terms of payment shall be publicly available after bid opening, regardless of any designation of confidentiality made by the bidder.

15. Pre-Opening Modification or Withdrawal of Bids

Bids may be modified or withdrawn by written notice received in the office designated in Attachment 1, before the time and date set for the bid opening. If a bid is withdrawn in accordance with this Section, the bid security, if any, shall be returned to the bidder.

16. Bid Evaluation and Award

In accordance with the New York City Charter, the Procurement Policy Board Rules and the terms and conditions of this Invitation For Bids, this Contract shall be awarded, if at all, to the responsible bidder whose bid meets the requirements and evaluation criteria set forth in the Invitation For Bids, and whose bid price is either the most favorable bid price or, if the Invitation For Bids so states, the most favorable evaluated bid price. A bid may not be evaluated for any requirement or criterion that is not disclosed in the Invitation For Bids.

Restriction: No negotiations with any bidder shall be allowed to take place except under the circumstances and in the manner set forth in Section 21. Nothing in this Section shall be deemed to permit a contract award to a bidder submitting a higher quality item than that designated in the Invitation For Bids, if that bid is not also the most favorable bid.

17. Late Bids, Late Withdrawals and Late Modifications

Any bid received at the place designated in the solicitation after the time and date set for receipt of bids is late and shall not be considered. Any request for withdrawal or modification received at the place designated in the solicitation after the time and date set for receipt of bids is late and shall not be considered. The exception to this provision is that a late modification of a successful bid that makes the bid terms more favorable to the City shall be considered at any time it is received.

18. Withdrawal of Bids.

Except as provided for in Section 15, above, a bidder may not withdraw its bid before the expiration of forty-five (45) days after the date of the opening of bids; thereafter, a bidder may withdraw its bid only in writing and in advance of an actual award. If within sixty (60) days after the execution of the Contract, the Commissioner fails to fix the date for commencement of work by written notice to the bidder, the bidder, at his option, may ask to be relieved of his obligation to perform the work called for by written notice to the Commissioner. If such notice is given to the Commissioner, and the request to withdraw is granted, the bidder waives all claims in connection with this Contract.

19. Mistake in Bids

(A) Mistake Discovered Before Bid Opening: A bidder may correct mistakes discovered before the time and date set for bid opening by withdrawing or correcting the bid as provided in Section 15 above.

(B) Mistakes Discovered Before Award

(1) In accordance with General Municipal Law (Section 103, subdivision 11), where a unilateral error or mistake is discovered in a bid, such bid may be withdrawn upon written approval of the Agency Chief Contracting Officer if the following conditions are met:

(a) The mistake is known or made known to the agency prior to the awarding of the Contract or within 3 days after the opening of the bid, whichever period is shorter; and
(b) The price bid was based upon an error of such magnitude that enforcement would be unconscionable; and
(c) The bid was submitted in good faith and the bidder submits credible evidence that the mistake was a clerical error as opposed to a judgment error; and
(d) The error in the bid is actually due to an unintentional and substantial arithmetic error or an unintentional omission of a substantial quantity of work, labor, material or services made directly in the compilation of the bid, which unintentional arithmetic error or unintentional omission can be clearly shown by objective evidence drawn from inspection of the original work paper, documents, or materials used in the preparation of the bid sought to be withdrawn; and
(e) It is possible to place the agency in the same position as existed prior to the bid.

(2) Unless otherwise required by law, the sole remedy for a bid mistake in accordance with this Article shall be withdrawal of the bid, and the return of the bid bond, or other security, if any, to the bidder. Thereafter, the agency may, in its discretion, award the Contract to the next lowest bidder or rebid the Contract. Any amendment to or reformation of a bid or a Contract to rectify such an error or mistake

therein is strictly prohibited.

(3) If the mistake and the intended correct bid are clearly evident on the face of the bid document, the bid shall be corrected to the intended correct bid and may not be withdrawn. Examples of mistakes that may be corrected are typographical errors, errors in extending unit prices, transposition errors and arithmetical errors.

20. Low Tie Bids

(A) When two or more low responsive bids from responsible bidders are identical in price, meeting all the requirements and criteria set forth in the Invitation For Bids, the Agency Chief Contracting Officer will break the tie in the following manner and order of priority:

(1) Award to a certified New York City small, minority or woman-owned business entity bidder;
(2) Award to a New York City bidder;
(3) Award to a certified New York State small, minority or woman-owned business bidder;
(4) Award to a New York State bidder.

(B) If two or more bidders still remain equally eligible after application of paragraph (A) above, award shall be made by a drawing by lot limited to those bidders. The bidders involved shall be invited to attend the drawing. A witness shall be present to verify the drawing and shall certify the results on the bid tabulation sheet.

21. Rejection of Bids

(A) Rejection of Individual Bids: The Agency may reject a bid if:

(1) The bidder fails to furnish any of the information required pursuant to Section 24 or 28 hereof; or if
(2) The bidder is determined to be not responsible pursuant to the Procurement Policy Board Rules; or if
(3) The bid is determined to be non-responsive pursuant to the Procurement Policy Board Rules; or if
(4) The bid, in the opinion of the Agency Chief Contracting Officer, contains unbalanced bid prices and is thus non-responsive, unless the bidder can show that the prices are not unbalanced for the probable required quantity of items, or if the imbalance is corrected pursuant to Section 15.

(B) Rejection of All Bids: The Agency, upon written approval by the Agency Chief Contracting Officer, may reject all bids and may elect to resolicit bids if in its sole opinion it shall deem it in the best interest of the City so to do.

(C) Rejection of All Bids and Negotiation With All Responsible Bidders: The Agency Head may determine that it is appropriate to cancel the Invitation For Bids after bid opening and before award and to complete the acquisition by negotiation. This determination shall be based on one of the following reasons:

(1) All otherwise acceptable bids received are at unreasonable prices, or only one bid is received and the Agency Chief Contracting Officer cannot determine the reasonableness of the bid price, or no responsive bid has been received from a responsible bidder; or

(2) In the judgment of the Agency Chief Contracting Officer, the bids were not independently arrived at in open competition, were collusive, or were submitted in bad faith.

(D) When the Agency has determined that the Invitation for Bids is to be canceled and that use of negotiation is appropriate to complete the acquisition, the contracting officer may negotiate and award the Contract without issuing a new solicitation, subject to the following conditions:

(1) prior notice of the intention to negotiate and a reasonable opportunity to negotiate have been given by the contracting officer to each responsible bidder that submitted a bid in response to the Invitation for Bids;

(2) the negotiated price is the lowest negotiated price offered by a responsible bidder; and

(3) the negotiated price is lower than the lowest rejected bid price of a responsible bidder that submitted a bid in response to the Invitation for Bids.

22. Right to Appeal Determinations of Non-Responsiveness or Non-Responsibility and Right to Protest Solicitations and Award

The bidder has the right to appeal a determination of non-responsiveness or non-responsibility and has the right to protest a solicitation and award. For further information concerning these rights, the bidder is directed to the Procurement Policy Board Rules.

23. Affirmative Action and Equal Employment Opportunity

This Invitation For Bids is subject to applicable provisions of Federal, State and Local Laws and executive orders requiring affirmative action and equal employment opportunity.

24. VENDEX Questionnaires

(A) Requirement: Pursuant to Administrative Code Section 6-116.2 and the PPB Rules, bidders may be obligated to complete and submit VENDEX Questionnaires. Generally, if this bid is $100,000 or more, or if this bid when added to the sum total of all contracts, concessions and franchises the bidder has received from the City and any subcontracts received from City contractors over the past twelve months, equals or exceeds $100,000, Vendex Questionnaires must be completed. If required, Vendex Questionnaires must be completed and submitted before any award of contract may be made or before approval is given for a proposed subcontractor. Non-compliance with these submission requirements may result in the disqualification of the bid, disapproval of a subcontractor, subsequent withdrawal of approval for the use of an approved subcontractor, or the cancellation of the contract after its award.

(B) Submission: Vendex Questionnaires must be submitted directly to the Mayor's Office of Contract Services, ATTN: Vendex, 253 Broadway, 9th Floor, New York, New York 10007. In addition, the bidder must submit a Confirmation of Vendex Compliance to the agency. A form for this confirmation is set forth in the Bid Booklet.

(C) Obtaining Forms: Vendex Questionnaires, as well as detailed instructions, may be obtained at www.nyc.gov/vendex. The bidder may also obtain Vendex forms and instructions by contacting the

Agency Chief Contracting Office or the contract person for this contract.

25. Complaints About the Bid Process

The New York City Comptroller is charged with the audit of contracts in New York City. Any vendor who believes that there has been unfairness, favoritism or impropriety in the bid process should inform the Comptroller, Office of Contract Administration, One Centre Street, Room 835, New York, New York; telephone number (212)669-2797.

26. Bid, Performance and Payment Security

(A) Bid Security: Each bid must be accompanied by bid security in an amount and type specified in Attachment 1 (page A-1 of the Bid Booklet). The bid security shall assure the City of New York of the adherence of the bidder to its proposal, the execution of the Contract, and the furnishing of Performance and Payment Bonds by the bidder, if required in Attachment 1. Bid security shall be returned to the bidder as follows:

(1) Within ten (10) days after the bid opening, the Comptroller will be notified to return the deposits of all but the three (3) lowest bidders. Within five (5) days after the award, the Comptroller will be notified to return the deposits of the remaining two unsuccessful bidders.
(2) Within five (5) days after the execution of the Contract and acceptance of the Contractor's bonds, the Comptroller will be notified to return the bid security of the successful bidder or, if performance and payment bonds are not required, only after the sum retained under Article 21 of the Contract equals the amount of the bid security.
(3) Where all bids are rejected, the Comptroller will be notified to return the deposit of the three (3) lowest bidders at the time of rejection.

(B) Performance and Payment Security: Performance and Payment Security must be provided in an amount and type specified in Attachment 1 (page A-1 of the Bid Booklet). The performance and payment security shall be delivered by the contractor prior to or at the time of execution of the Contract. If a contractor fails to deliver the required performance and payment security, its bid security shall be enforced, and an award of Contract may be made to the next lowest responsible and responsive bidder, or the contract may be rebid.

(C) Acceptable Types of Security: Acceptable types of security for bids, performance, and payment shall be limited to the following:

(1) a one-time bond in a form satisfactory to the City;
(2) a bank certified check or money order;
(3) obligations of the City of New York; or
(4) other financial instruments as determined by the Office of Construction in consultation with the Comptroller.

Whenever the successful bidder deposits obligations of the City of New York as performance and payment security, the Comptroller may sell and use the proceeds thereof for any purpose for which the principal or surety on such bond would be liable under the terms of the Contract. If the money is deposited with the Comptroller, the successful bidder shall not be entitled to receive interest on such money from the City.

(D) Form of Bonds: Security provided in the form of bonds must be prepared on the form of bonds authorized by the City of New York. Forms for bid, performance, and payment bonds are included in the Invitation for Bids Documents. Such bonds must have as surety thereunder such surety company or companies as are: (I) approved by the City of New York; (2) authorized to do business in the State of New York, and (3) approved by the Department of the Treasury of the United States. Premiums for any required bonds must be included in the base bid.

The bidder is advised that submission of a bid bond where the surety on such bond fails to meet the criteria set forth herein, shall result in the rejection of the bid as non-responsive.

The Department of the Treasury of the United States advises that information concerning approved surety companies may be obtained as follows: (1) from the Government Printing Office at 202-512-1800; (2) through the Internet at http://www.fms.treas.gov/c570/index.html, and (3) through a computerized public bulletin board, which can be accessed by using your computer modem and dialing 202-874-6887.

(E) Power of Attorney: Attorneys in fact who sign bid, performance, or payment bonds must file with each bond a certified copy of their power of attorney to sign said bonds.

27. Failure to Execute Contract

In the event of failure of the successful bidder to execute the Contract and furnish the required security within ten (10) days after notice of the award of the Contract, the deposit of the successful bidder or so much thereof as shall be applicable to the amount of the award made shall be retained by the City, and the successful bidder shall be liable for and hereby agrees to pay on demand the difference between the price bid and the price for which such Contract shall be subsequently awarded, including the cost of any required reletting and less the amount of such deposit. No plea of mistake in such accepted bid shall be available to the bidder for the recovery of the deposit or as a defense to any action based upon such accepted bid. Further, should the bidder's failure to comply with this Section cause any funding agency, body or group (Federal, State, City, Public, Private, etc.) to terminate, cancel or reduce the funding on this project, the bidder in such event shall be liable also to the City for the amount of actual funding withdrawn by such agency on this project, less the amount of the forfeited deposit.

28. Bidder Responsibilities and Qualifications

(A) Bidders must include with their bids all information necessary for a determination of bidder responsibility, as set forth in the Specifications.

(B) The Agency may require any bidder or prospective bidder to furnish all books of account, records, vouchers, statements or other information concerning the bidder's financial status for examination as may be required by the Agency to ascertain the bidder's responsibility and capability to perform the Contract. If required, a bidder must also submit a sworn statement setting forth such information as the Agency may require concerning present and proposed plant and equipment, the personnel and qualifications of his working organizations, prior experience and performance record.

(C) Oral Examination on Qualifications: In addition thereto, and when directed by the Agency, the bidder, or a responsible officer, agent or employee of the bidder, must submit to an oral examination to be conducted by the Agency in relation to his proposed tentative plan and schedule of

operations, and such other matters as the Agency may deem necessary in order to determine the bidder's ability and responsibility to perform the work in accordance with the Contract. Each person so examined must sign and verify a stenographic transcript of such examination noting thereon such corrections as such person may desire to make.

(D) If the bidder fails or refuses to supply any of the documents or information set forth in paragraph (B) hereof or fails to comply with any of the requirements thereof, the Agency may reject the bid.

29. Employment Report

In accordance with Executive Order No. 50 (1980) as modified by Executive Order 108 (1986), the filing of a completed Employment Report (ER) is a requirement of doing business with the City of New York for construction contractors with contracts of $1,000,000 or more and subcontractors with construction subcontracts of $750,000 or more. The required forms and information are included in the Bid Booklet.

30. Labor Law Requirements

(A) General: The successful bidder will be required to comply strictly with all Federal, State and local labor laws and regulations.

(B) New York State Labor Law: This Contract is subject to New York State Labor Law Section 220, which requires that construction workers on the site be paid prevailing wages and supplements. The Contractor is reminded that all wage provisions of this Contract will be enforced strictly and failure to comply will be considered when evaluating performance. Noncompliance may result in the contractor being debarred by the City from future contracts. Complaints filed with the Comptroller may result in decisions which may debar a contractor from bidding contracts with any state governmental entity and other political subdivisions.

(C) Records: The Contractor is expected to submit accurate payroll reports and other required documents and verify attendance and job classifications being utilized in compliance with the law, Contract provisions and agency procedures.

31. Insurance

(A) Bidders are advised that the insurance requirements contained herein are regarded as material terms of the Contract. As required by Article 22 of the Contract, the contractor must effect and maintain with companies licensed and authorized to do business in the State of New York, the types of insurance set forth therein, when required by and in the amounts set forth in Schedule A of the General Conditions. Such required insurance must be provided from the date the contractor is ordered to commence work and up to the date of final acceptance of all required work.

(B) The contractor must, within ten days of receipt of the notice of award, submit the following insurance documentation: (a) original certificate of insurance for general liability in the amount required by Schedule A of the General Conditions, and (b) original certificates of insurance or other proof of coverage for workers' compensation and disability benefits, as required by Section 57 of the New York State Workers' Compensation Law and Section 220 of the Disability Benefits Law.

32. Lump Sum Contracts

(A) Comparison of Bids: Bids on Lump Sum Contracts will be compared on the basis of the lump sum price bid, adjusted for alternate prices bid, if any.

(B) Lump Sum Bids for "General Construction Work" which include excavation shall include all necessary excavation work defined in the Specifications as being included in the lump sum bid. The bidder shall also bid a unit price for the additional cost of excavating material which is defined in the Specifications as excavation for which additional payment will be made. The total estimated additional cost of removing such material will be taken as the quantity set forth in the Engineer's Estimate multiplied by the unit price bid. This total estimated cost of additional excavation shall be added to the lump sum bid for the General Construction Work for the purpose of comparing bids to determine the low bidder.

(C) Variations from Engineer's Estimate: The Engineer's Estimate of the quantity of excavation for which additional payment will be made is approximate only and is given solely to be used as a uniform basis for the comparison of bids and such estimate is not to be considered as part of this contract. The quantities actually required to complete the contract work may be more or less than the quantities in the Engineer's Estimate and, if so, no action for damages or for loss of profits shall accrue to the contractor by reason thereof.

33. Unit Price Contracts

(A) Comparison of Bids: Bids on Unit Price Contracts will be compared on the basis of a total estimated price, arrived at by taking the sum of the estimated quantities of such items, in accordance with the Engineer's Estimate of Quantities set forth in the Bid Schedule, multiplied by the corresponding unit prices, and including any lump sum bids on individual items.

(B) Variations from Engineer's Estimate: Bidders are warned that the Engineer's Estimate of Quantities on the various items of work and materials is approximate only, given solely to be used as a uniform basis for the comparison of bids, and is not be considered part of this contract. The quantities actually required to complete the contract work may be less or more than so estimated, and if so, no action for damages or for loss of profits shall accrue to the contractor by reason thereof.

(C) Overruns: The terms and conditions applicable to overruns of unit price items are set forth in Article 26 of the Contract.

34. Excise Tax

Bidders are referred to the Specifications for information on Federal Excise Tax exemptions.

35. Licenses and Permits

The successful bidder will be required to obtain all necessary licenses and permits necessary to perform the work.

36. Multiple Prime Contractors

If more than one prime contractor will be involved on this project, all contractors are required to examine the Invitation for Bid packages for all other parts of the project.

37. Locally Based Enterprise Requirements (LBE)

This Contract is subject to the requirements of Administrative Code, Section 6-108.1, and the regulations promulgated thereunder. No construction contract will be awarded unless and until these requirements have been complied with in their entirety. The bidder is advised of the provisions set forth below, as well as the provisions with respect to the Locally Based Enterprise Program contained in Article 67 of the Contract. The contractor is advised that:

(A) If any portion of the Contract is subcontracted, not less than ten percent of the total dollar amount of the contract shall be awarded to locally based enterprises ("LBEs"); except, where less than ten percent of the total dollar amount of the Contract is subcontracted, such lesser percentage shall be so awarded.

(B) No contractor shall require performance and payment bonds from LBE subcontractors.

(C) No Contract shall be awarded unless the contractor first identifies in its bid:

(1) the percentage, dollar amount and type of work to be subcontracted; and
(2) the percentage, dollar amount and type of work to be subcontracted to LBEs.

(D) Within ten calendar days after notification of low bid, the apparent low bidder shall submit an "LBE Participation Schedule" to the contracting agency. If such schedule does not identify sufficient LBE subcontractors to meet the requirements of Administrative Code Section 6-108.1, the apparent low bidder shall submit documentation of its good faith efforts to meet such requirements.

(1) The "LBE Participation Schedule" shall include:

(a) the name and address of each LBE that will be given a subcontract,
(b) the percentage, dollar amount and type of work to be subcontracted to the LBE, and
(c) the dates when the LBE subcontract work will commence and end.

(2) The following documents shall be attached to the "LBE Participation Schedule":

(a) verification letters from each subcontractor listed in the "LBE Participation Schedule" stating that the LBE will enter into a formal agreement for work,
(b) certification documents of any proposed LBE subcontractor which is not on the LBE certified list, and
(c) copies of the certification letter of any proposed subcontractor which is an LBE.

(3) Documentation of good faith efforts to achieve the required LBE percentage shall include as appropriate but not limited to the following:

(a) attendance at prebid meetings, when scheduled by the agency, to advise bidders of contract requirements;

(b) advertisement where appropriate in general circulation media, trade association publications and small business media of the specific subcontracts that would be at least equal to the percentage goal for LBE utilization specified by the contractor;

(c) written notification to association of small, minority and women contractors soliciting specific subcontractors;

(d) written notification by certified mail to LBE firms that their interest in the contract is solicited for specific work items and their estimated values;

(e) demonstration of efforts made to select portions of the work for performance by LBE firms in order to increase the likelihood of achieving the stated goal;

(f) documented efforts to negotiate with LBE firms for specific subcontracts, including at a minimum:
(i) The names, address and telephone numbers of LBE firms that are contacted;
(ii) A description of the information provided to LBE firms regarding the plans and specifications for portions of the work to be performed;
(iii) Documentation showing that no reasonable price can be obtained from LBE firms;
(iv) A statement of why agreements with LBE firms were not reached;

(g) a statement of the reason for rejecting any LBE firm which the contractor deemed to be unqualified; and

(h) documentation of efforts made to assist the LBE firms contacted that needed assistance in obtaining required insurance.

(E) Unless otherwise waived by the Commissioner with the approval of the Office of Economic and Financial Opportunity, failure of a proposed contractor to provide the information required by paragraphs (C) and (D) above may render the bid non-responsive and the Contract may not be awarded to the bidder. If the contractor states that it will subcontract a specific portion of the work, but can demonstrate despite good faith efforts it cannot achieve its required LBE percentage for subcontracted work until after award of Contract, the Contract may be awarded, subject to a letter of compliance from the contractor stating that it will comply with Administrative Code Section 6-108.1 and subject to approval by the Commissioner. If the contractor has not met its required LBE percentage prior to award, the contractor shall demonstrate that a good faith effort has been made subsequent to award to obtain LBEs on each subcontract until its meets the required percentage.

(F) When a bidder indicates prior to award that no work will be subcontracted, no work may be subcontracted without the prior written approval of the Commissioner, which shall be granted only if the contractor in good faith seeks LBE subcontractors at least six weeks prior to the start of work.

(G) The contractor may not substitute or change any LBE which was identified prior to award of the contract without the written permission of the Commissioner. The contractor shall make a written application to the Commissioner for permission to make such substitution or change, explaining why the contractor needs to change its LBE subcontractor and how the contractor will meet its LBE subcontracting requirement. Copies of such application must be served on the originally identified LBE by certified mail return receipt requested, as well as the proposed substitute LBE. The Commissioner shall determine whether or not to grant the contractor's request for substitution.

38. Bid Submission Requirements

The following forms, all of which are contained in the Bid Booklet, are to be completed and submitted with the bid:

(1) Bid Schedule and Bid Form, including Affirmation
(2) Bid Security (if required, see Attachment 1 on Page A-1)
(3) M/WBE Subcontactor Utilization Plan (if participation goals have been established)

FAILURE TO SUBMIT ITEMS (1), (2) AND (3)
WILL RESULT IN THE DISQUALIFICATION OF THE BID.

(4) Safety Questionnaire
(5) Construction Employment Report (if bid is $1,000,000 or more)
(6) Contract Certificate (if bid is less than $1,000,000)
(7) Confirmation of Vendex Compliance
(8) Special Experience Requirements (if applicable to this contract)
(9) Apprenticeship Program Questionnaire (if applicable)

FAILURE TO SUBMIT ITEMS (4) THROUGH (9)
MAY RESULT IN THE DISQUALIFICATION OF THE BID.

39. Comptroller's Certificate

This Contract shall not be binding or of any force unless it is registered by the Comptroller in accordance with Section 328 of the City Charter and the Procurement Policy Board Rules. This Contract shall continue in force only after annual appropriation of funds by the City of New York and certification as hereinabove set forth.

40. Procurement Policy Board Rules

This Invitation For Bids is subject to the Rules of the Procurement Policy Board of the City of New York. In the event of a conflict between said Rules and a provision of this Invitation For Bids, the Rules shall take precedence.

41. DDC Safety Requirements

The DDC Safety Requirements apply to the work to be performed pursuant to the Contract. The DDC Safety Requirements are set forth on the following pages.

CITY OF NEW YORK
DEPARTMENT OF DESIGN AND CONSTRUCTION
SAFETY REQUIREMENTS FOR CONSTRUCTION CONTRACTS

February 2019

THE DDC SAFETY REQUIREMENTS FOR CONSTRUCTION CONTRACTS INCLUDE THE FOLLOWING SECTIONS:

I. POLICY ON SITE SAFETY

II. PURPOSE

III. DEFINITIONS

IV. RESPONSIBILITIES

V. SAFETY QUESTIONNAIRE

VI. SITE SAFETY PLAN

VII. KICK-OFF/PRE-CONSTRUCTION MEETINGS AND SAFETY REVIEW

VIII. EVALUATION DURING WORK IN PROGRESS

IX. SAFETY PERFORMANCE EVALUATION

I. POLICY ON SITE SAFETY

The City of New York Department of Design and Construction (DDC) is committed to a policy of injury and illness prevention and risk management for construction work that will ensure the safety and health of the workers engaged in the projects and the protection of the general public. Therefore, it is DDC's policy that work carried out by Contractors on DDC contracts must, at a minimum, comply with the most current versions of all applicable federal, state and city laws, rules, and regulations, including without limitation:

- Code of Federal Regulations, Title 29, Part 1926 (29 CFR 1926) and applicable Sub-parts of Part 1910 – U.S. Occupational Safety and Health Administration (OSHA);
- Federal Highway Administration – Manual on Uniform Traffic Control Devices (MUTCD);
- New York Codes, Rules and Regulations (NYCRR), Title 12, Part 23 – Protection in Construction, Demolition and Excavation Operations;
- New York Codes, Rules and Regulations (NYCRR), Title 16, Part 753 – Protection of Underground Facilities;
- New York City Administrative Code, Title 28 – New York City Construction Codes;
- Rules of the City of New York, Title 15, Chapter 13 – Rules Pertaining To the Prevention of the Emission of Dust from Construction Related Activities;
- Rules of the City of New York, Title 15, Chapter 28 – Citywide Construction Noise Mitigation;
- Rules of the City of New York, Title 34 Chapter 2 – NYCDOT Highway Rules.

The Contractor will be required to comply with all new and/or revised federal, state and city laws, rules, and regulations, issued during the course of the project, at the expense of the Contractor without any additional costs to the DDC.

II. PURPOSE

The purpose of this policy is to ensure that Contractors perform their work and supervise their employees in accordance with all applicable federal, state and city rules and regulations. Further, Contractors will be expected to minimize or eliminate jobsite and public hazards, through a planning, inspection, auditing and corrective action process. The goal is to control risks so that injuries, illnesses, and accidents to contractors' employees, DDC employees and the general public, as well as damage to city-owned and private property, are reduced to the lowest level feasible.

III. DEFINITIONS

Agency Chief Contracting Officer (ACCO): The ACCO will mean the person delegated authority by the Commissioner to organize and supervise the procurement activity of subordinate Agency staff in conjunction with the City Chief Procurement Officer (CCPO).

Competent Person: As defined by OSHA, an individual who is capable of identifying existing and predictable hazards in the surroundings or working conditions that are unsanitary, hazardous, or dangerous to employees or the general public, and who has authorization to take prompt corrective measures to eliminate them. This individual will have completed, at a minimum an authorized 30-hour OSHA Construction Safety Course. The Contractor may be required to provide more than one competent person due to construction operations and based on the number of active work sites.

Construction Safety Auditor: A representative of the Construction Safety Unit who provides inspection and assessment services to enhance health and safety on all DDC construction projects. The activities of the Construction Safety Auditor include performing site audits, reviewing safety plans, reviewing construction permits, drawings, verifying Contractor's compliance with applicable federal, state and city laws, rules, regulations, and DDC Contract Safety Requirements, etc. and rendering technical advice and assistance to DDC Resident Engineers and Project Managers.

Construction Safety Unit: A unit of DDC Safety and Site Support that assesses contractor's safety on DDC jobsites and advises responsible parties of needed corrective actions.

Registered Construction Superintendent: For certain projects, as defined in New York City Construction Codes – Title 28, the contractor will provide a Construction Superintendent registered with the NYC Department of Buildings and responsible for all duties as defined in Chapter 33 of Title 1 of the Rules of the City of New York.

Contractor: For purposes of these Safety Requirements, the term "Contractor" will mean any person or entity that enters into a contract for the performance of construction work on a DDC project. The term "Contractor" will include any person or entity which enters into any of the following types of contracts: (1) a prime construction contract for a specific project, (2) a prime construction contract using the Job Order Contracting System ("JOCS Contract"), and (3) a subcontract with a CM/Builder ("First Tier Subcontract").

Daily Safety Job Briefing: Daily jobsite safety briefings, given to all jobsite personnel at project site by the Contractor before work begins and/or if hazards or potential hazards are discovered while working, with the purpose of discussing the scheduled activities for the day, the hazards related to these activities, activity specific safety procedures, and Job Hazard Analysis associated with the scheduled construction work. Daily jobsite briefings will be documented, available at the jobsite, and will include at a minimum, topics, name and signature of the person conducting the briefing session, names and signatures of attendants, name of the designated competent person, contactor's name, DDC Project ID, date, time, and location.

Director - Construction Safety: Responsible for the operations of the Construction Safety Unit and the DDC Site Safety management programs.

Job Hazard Analysis (JHA): A process of identifying the major job tasks and any potential site-specific hazards that may be present during construction and establishing the means and methods to eliminate or control those hazards. A JHA will be documented, available at the jobsite and will include at a minimum work tasks, being performed, identified hazards, control methods for the identified hazards, contractor's name, DDC Project ID, location, date, name and signature of certifying person. A JHA is a living document that will be re-evaluated and revised to address new hazards and tasks that may develop and will be present at the worksite and produced upon request.

Qualified Person: As defined by OSHA, an individual who, by possession of a recognized degree, certificate, license, or professional standing, or who by extensive knowledge, training, and experience, has successfully demonstrated his or her ability to solve problems relating to the subject matter, the work, or the project. Qualified Persons are required under regulation to address issues pertaining, but without limit, to fall protection, scaffold design, maintenance and protection of traffic, and excavation protective system, among others.

Project Site: Those areas indicated in the Contract Documents where the Work is to be performed.

Project Safety Representative: The designated Project Safety Representative will have at a minimum an OSHA 30-hour Construction Safety Course and other safety training applicable to Contractor's/subcontractor's project work. This individual will be responsible to oversee safety performance of the required construction work, conduct documented daily safety inspections, and implement corrective actions to maintain a safe work site. The Project Safety Representative must have sufficient experience and skills necessary to thoroughly understand the health and safety hazards and controls and must have authority to undertake corrective actions. A dedicated full-time Project Safety Representative may be required on large projects and projects deemed by DDC to be particularly high risk. DDC reserves the right to request a dedicated full-time Project Safety Representative for any reason at any time during the course of the project at the expense of the Contractor without any additional costs to the DDC. The full-time Project Safety Representative will be present at the site during all work activities.

Resident Engineer ("RE"): Representative of the Commissioner duly designated by the Commissioner to be his/her representative at the site of the work. The RE may be a consultant retained by DDC, including a Construction Management (CM) or Resident Engineer Inspection (REI) firm. If DDC has retained a CM, REI or other consultant firm to perform management and oversite for the Project (e.g., CM-Builder, CM-Design-Builder, Project Manager, Program Manager), that CM, REI or other consultant is the Resident Engineer for purposes of these Safety Requirements.

Safety Questionnaire: Used by DDC to evaluate Contractor's current and past safety performance. It is required to be completed by all Contractors initially when submitting bids for Construction work, or when being pre-qualified and updated annually or as requested by the DDC.

Site Safety Manager: For certain projects, as defined in New York City Construction Codes – Title 28, the Contractor will provide a Site Safety Manager with a Site Safety Manager License issued by the New York City Department of Building.

Site Safety Plan: A site-specific safety plan developed by the Contractor for a DDC project. The Site Safety Plan will identify hazards associated with the project work and include project specific safety procedures and training appropriate and necessary to complete the work. The Site Safety Plan will be submitted within 30 days from the Award Date or as otherwise directed and is subject to review and acceptance by the Construction Safety Unit prior to the commencement of work at the site.

Unsafe or Unhealthy Condition: A condition that could be potentially hazardous to the health and safety of personnel or the public, and/or damaging to equipment, machinery, property, or the environment.

Weekly Safety Meetings: Weekly jobsite safety meetings, given to all jobsite personnel by Contractor, with the purpose of discussing general safety topics and job specific requirements encountered at the DDC work site. Weekly safety meetings will be documented and will include at a minimum, topics, name and signature of the person conducting the meeting, names and signatures of attendees, contractor's name, DDC Project ID, date, and location.

Work: The construction required by the Contractor's Contract Documents whether completed or partially completed, performed by the Contractor/ subcontractors. Work refers to the furnishing of labor, furnishing and incorporating materials and equipment into the construction and providing any service required by the Contract Documents to fulfill the Contractor's obligation to complete the Project.

IV. RESPONSIBILITIES

All persons who manage, perform, and provide support for construction projects will conduct operations in compliance with the requirements identified in this Policy and all applicable governing regulatory agency requirements and guidelines pertaining to safety in construction.

A. Resident Engineer

1. Review and facilitate Contractor(s) Site Safety Plan submittals to DDC for acceptability.
2. Notify the Construction Safety Unit of the commencement of construction work.
3. Develop and implement a training verification process to ensure that all CM/REI, consultant, Contractor, and subcontractor employees are properly trained. Maintain all applicable initial and refresher training records and assures documentation availability on site.
4. Maintain documentation of and attend weekly safety meetings and daily safety job briefings.
5. Assure that Contractor(s) JHA's are current to reflect the work tasks being performed, hazards, and control methods to mitigate the identified hazards. Verify that all employees at the job site are trained on the JHAs and maintain supporting documentation on site.
6. Assure adequate planning for all critical construction activities (crane operation, excavation, confined space entry, etc.) including coordination between Contractor(s) /DDC/ other Agencies as required.
7. Maintain custody of all construction related permits, plans, approvals, drawings, etc., related to the project and assure their availability on site.
8. Recognize, minimize, or eliminate jobsite and public hazards, through required planning, inspection, verification, and corrective action process.
9. Monitor the conditions at the site for conformance with the Contractor's Site Safety Plan, DDC policies, permits, and all applicable regulations and documentation that pertain to construction safety.
10. Notify the Contractor and DDC immediately upon determination of any condition or activity existing which is not in compliance with the Contractor's Site Safety Plan, applicable federal, state or local codes or any condition that presents a potential risk of injury to the public or workers or possible damage to property. Direct the Contractor to provide such labor, materials, equipment, and supervision to remedy such conditions.

11. Notify the Construction Safety Unit and the ACCO's Insurance and Risk Management Unit of project-related accidents, incidents, and near misses as per DDC's Construction Safety Emergency and Accident Notification and Response Procedure within two (2) hours.
12. In case of an accident, incident, or near miss, RE is responsible to protect the integrity of the accident site including but not limited to: the safeguarding of all evidence, documentation of all personnel on site at the time of the accident, gather facts related to all accidents, incidents, or near miss, and prepare required DDC Construction Accident Report as per DDC's Construction Safety Emergency and Accident Notification and Response Procedure. Maintain all records pertaining to accidents, incidents, and near miss and have them available upon request.
13. Notify the Construction Safety Unit within two (2) hours of the start of an inspection by any outside/ regulatory agency personnel, including NYS, OSHA, NYC DOB or any other City/State/Federal oversight entity and forward a copy of the inspection report within one business day of its receipt.
14. Escort and assist Construction Safety Auditors during all field and record audits.
15. Report any emergency conditions to the Construction Safety Unit immediately.

Note: In addition to the responsibilities listed above, if the Resident Engineer is a CM/REI or other non-City party hired by the City to manage the Project, the Resident Engineer is also required to do the following:

16. Provide personnel who are certified and or trained appropriately for the requirements of the project.
17. Perform an investigation for any project-related accidents, incidents, and near misses. Within 24-hours of the time of the accident, incident, or near miss, the CM/REI will submit an investigation report to the Construction Safety Unit. Such report will include proposed remedial measures and implementation of corrective actions to prevent recurrence.

DDC reserves the right to request that the CM/REI replace any CM/REI personnel for any reason at any time during the project.

B. Construction Contractors

Note: For CM-Build and CM-Design-Build Projects, the CM will meet all requirements listed in this section, as well as the Resident Engineer section above.

1. Submit a completed Safety Questionnaire and other safety performance related documentation with its bid or as part of a pre-qualification package.
2. Submit a Site Safety Plan within 30 days from the Award Date or as otherwise directed. The Site Safety Plan is subject to review and acceptance by the Construction Safety Unit prior to the commencement of work at the site. The Site Safety Plan will be revised and updated as necessary during the course of the project.
3. Designate and identify a Project Safety Representative in the Site Safety Plan. The Contractor will immediately notify the Construction Safety Unit, in a form and manner acceptable to the Construction Safety Unit, of any permanent change to the designated Project Safety Representative. In the event the primary designated Project Safety Representative is temporary unable to perform his or her duties, an alternate Project Safety Representative will be provided. Resumes, outlining the qualification and experience for the Project Safety Representative (s) will be included in the Site Safety Plan and available upon request. DDC reserves the right to request the Contractor to replace a Project Safety Representative for any reason at any time during the course of the project.
4. Designate and identify a Competent Person(s) in the Site Safety Plan. Contractor/subcontractor may be required to provide more than one competent person due to construction operations and based on a number of work tasks/areas. DDC reserves the right to request the Contractor to replace a Competent Person or provide additional Competent Person(s) for any reason at any time during the course of the project. The Competent Person will be present at the site during all work activities.
5. For certain projects, as defined in New York City Construction Codes – Title 28, designate and identify the Licensed Site Safety Manager or Registered Construction Superintendent. Resumes, outlining the qualification and experience for the Licensed Site Safety Manager or Registered Construction Superintendent will be included in the Site Safety Plan and available upon request. The Contractor will immediately notify the Construction Safety Unit, in a form and manner acceptable to the Construction Safety Unit, of any permanent change to the designated Site Safety Manager and/or Construction Superintendent. In the event the primary designated Site Safety Manager or Construction Superintendent is temporarily unable to perform his

or her duties, an alternate Licensed Site Safety Manager and/or Registered Construction Superintendent will be provided. The Construction Safety Unit must be informed of such change. DDC reserves the right to request the Contractor to replace Site Safety Manager or Construction Superintendent for any reason at any time during the course of the project.

6. Develop a written Job Hazard Analysis (JHA) that identifies safety hazards and control methods for project specific work tasks. A preliminary JHA will be included in the Site Safety Plan submitted by the Contractor. A JHA is a living document that will be re-evaluated and revised to address new hazards and tasks that may develop during the course of the project and will be present at the worksite and produced upon request.
7. Develop project specific safety procedures to protect employees, general public, and property during all construction activities for the duration of the project.
8. Ensure that all employees are aware of the hazards associated with the project through documented formal and informal training and/or other communications. Conduct and document new employee and site-specific safety orientation for all Contractor and subcontractor personnel to review the hazards associated with the project as identified in the Site Safety Plan and the specific safety procedures and controls that will be used to protect workers, the general public and property. The Project Safety Representative will conduct this training prior to mobilization and if necessary during the course of the project. Documentation will be provided to the RE.
9. Prior to performing any work on DDC project all Contractor's and subcontractor's employees will have successfully completed, within the previous five calendar years, an OSHA 10-hour construction safety course. All training records (OSHA 10-hour, flagger, scaffold, fall protection, confined space, etc.) will be provided to the RE prior to mobilization, included in the Site Safety Plan, kept current during the course of the project, and available for review.
10. Conduct and document weekly safety meetings and daily job briefing sessions for the duration of the project. Attendance at weekly safety meetings and daily job briefing sessions is mandatory. A written record of weekly safety meetings will be available upon request and job briefing sessions will be available at the worksite.
11. As part of the Site Safety Plan, prepare site specific procedures, such as maintenance and protection of traffic plan, steel erection plan, confined space program, fall protection plan, demolition plan, site specific emergency evacuation plan, etc. (if not otherwise provided in the contract documents) and comply with all of its provisions.
12. Have immediately available for review at the project site where actual construction activities are being performed all applicable documentation, including but not limited to: JHAs for work tasks being performed, all required training records, MPT plan (where applicable), Noise and Dust Mitigation Plans, excavation protective system drawings (where applicable), Emergency Evacuation plan, fall protection program (where applicable), confined space program (where applicable), all required permits, daily job briefing records, all required documentation for crane operation (where applicable), daily inspection checklist, scaffold and sidewalk drawings (when applicable), safety data sheets for chemicals in use.
13. Comply with all federal, state and local safety and health rules, laws, and regulations.
14. Comply with all provisions of the Site Safety Plan.
15. Provide, replace, and adequately maintain at or around the project site, suitable and sufficient signage, lights, barricades and enclosures (fences, sidewalk sheds, netting, bracing, etc.). The project specific MPT plan will be developed, implemented, and reviewed during the course of the project.
16. The Project Safety Representative will conduct daily safety inspections, document the inspection results, implement corrective actions for the identified hazards. Maintain the inspection records and have them available upon request.
17. **Report unsafe or unhealthy conditions to the RE as soon as practical, but no more than 24 hours after discovery, and take prompt actions to remove or abate such conditions. Should an imminent dangerous condition be discovered, Contractor will stop all work in the area of danger until corrections are made.**
18. Report all accidents, incidents and near misses involving injuries to workers or the general public, as well as property damage, to the RE within one (1) hour.
19. Following an accident or incident, unless otherwise directed, the Contractor will not remove or alter any equipment, structure, material, or evidence related to the accident or incident. Exception: Immediate emergency procedures taken to secure structures, temporary construction, operations, or equipment that pose a continued imminent danger or facilitate assistance for persons who are trapped or who have sustained

bodily injury. Take additional measures as necessary to secure the accident or incident site and to protect against any further injury or property damage.

20. The Contractor will perform an investigation into the root cause of the accident, incident, or near miss. Within 24 hours of an accident, incident, or near miss, the Contractor will prepare and submit to the RE a written investigation report detailing findings, corrective actions, and hazard mitigation implementation to prevent recurrence.
21. Notify the RE within two (2) hours of the start of an inspection by any outside regulatory agency personnel, including OSHA, NYC DOB, or others.
22. Maintain all records pertaining to all required safety compliance documents, accidents and incidents reports. DDC reserves the right to request copy of any records pertaining to the safety of the project and required by DDC and other federal, state, and city agencies, including but not limited to permits, training records, safety inspection records, drawings, equipment records, etc.
23. Cooperate with DDC Construction Safety Unit/ RE and address DDC recommendations on safety, which will in no way relieve the Contractor of its responsibilities for safety on the project. The Contractor has sole responsibility for safety.

V. SAFETY QUESTIONNAIRE

DDC requires that all Contractors provide information regarding their current and past safety performance and programs. This will be accomplished by the use of the DDC Safety Questionnaire. As a part of the bid submittal package, the contractor will submit a completed DDC Safety Questionnaire listing company workers' compensation experience modification rating and OSHA Incident Rates for the three (3) years prior to the date of the bid opening. DDC may request a Contractor to update its Questionnaire at any time or to provide more detailed information. The Contractor will provide the requested information within 15 days.

The following criteria will be used by DDC in reviewing the Contractor's responsibility, which will be based on the information provided on the questionnaire:

Criteria 1: OSHA Injury and Illness Rates (I&IR) are no greater than the average for the industry (based on the most current Bureau of Labor Statistics data for the Contractors SIC code); and

Criteria 2: Insurance workers compensation Experience Modification Rate (EMR) equal to or less than 1.0; and

Criteria 3: Any willful violations issued by OSHA or NYC DOB within the last three (3) years; and

Criteria 4: A fatality (worker or member of public) and injuries, requiring OSHA notification, experienced on or near Contractor's worksite within the last three (3) years; and

Criteria 5: Past safety performance on DDC projects (accidents; status of site safety plan submittals; etc.)

Criteria 6: OSHA violation history for the last three (3) years;

Criteria 7: Contractor will provide OSHA Injury and Illness Records (currently OSHA 300 and 300A Logs) for the last three (3) years.

If the Contractor fails to meet the basic criteria listed above, the Construction Safety Unit may request, through the ACCO, more details concerning the Contractor's safety experience. DDC may request the Contractor to provide copies of, among other things, accident investigation reports, OSHA records, OSHA and NYC DOB citations, EPA citations and written corrective action plan.

VI. SITE SAFETY PLAN

Within thirty (30) days from the Award Date or as otherwise directed, the Contractor will submit the Site Safety Plan. The Site Safety Plan will identify project work scope, safety hazards associated with the project tasks, and include specific safety procedures and training appropriate and necessary to complete the work. The Site Safety Plan is subject to review and acceptance by the Construction Safety Unit prior to the commencement of work at the site. Due to the project work scope and project duration, the Construction Safety Unit may grant a conditional acceptance

for a Site Safety Plan without all sections being complete. In a case of a "Conditional Acceptance" of a Site Safety Plan, the Contractor will provide the remaining sections previously incomplete and/or not submitted for review and acceptance by the Construction Safety Unit prior to the commencement of the construction activities. The Construction Safety Unit reserves the right to withdraw the initial "Conditional Acceptance" if the Contractor fails to provide the remaining sections of a Site Safety Plan. Failure by the Contractor to submit an acceptable Site Safety Plan will be grounds for default.

Site Safety Plan requirements: The Site Safety Plan will be a written document and will apply to all project specific Contractor and subcontractor operations, and will have at a minimum, the following elements with each described in a separate section (It may be necessary to modify the basic format for certain unique or high-risk projects, such as tunnels or high-rise construction). All Site Safety Plan sections will be numbered in the order listed below. For sections, which are not applicable for the type of the work being performed by the Contractor on DDC project, the Contractor will in writing indicate "Not applicable based on the project work scope." The Site Safety Plan will include Contractor's name, DDC project ID, project location (s), and development and revision dates. The Site Safety Plan will include the sections, attachments, and appendixes provided in the Site Safety Plan. All pages of the Site Safety Plan will be numbered.

1. Project Work Scope – Detailed information regarding work tasks that will be performed by Contractor and subcontractors under the project.
2. Responsibility and Organization – Contractor's organization chart with responsible personnel for the project, including titles, names, contact information, roles, and responsibilities. All Contractor's personnel required by the DDC Safety Requirements will be identified.
3. Safety Training and Education – OSHA 10 Hours training, requirements for daily safety briefings and weekly safety meetings, any work task specific training, responsible staff for implementation of training program for the project.
4. Job Hazard Analysis (JHA) – Project specific Job Hazard Analysis including work tasks, identified hazards, hazard control methods (administrative, engineering, PPE) to protect workers, property and general public, Contractor's name, project id, location, name and signature of a certifying person, hazard assessment date.
5. Protection of Public – Project specific procedures covering safety of the general public during all project construction activities.
6. Hazard Corrective Actions - Procedures for hazard identification, including responsible person(s), frequency of safety inspections, implementation of corrective actions, safety inspection checklist.
7. Accident/Exposure Investigation – Project specific procedures for accident/incident/near miss investigation and implementation of corrective actions. Accident/incident/near miss notification procedure of DDC project staff (timer frame and responsible personnel).
8. Recording and Reporting Injuries – Procedures to meet 29 CFR 1904 requirements.
9. First Aid and Medical Attention – Responsible staff, location and inspection of First Aid kit, directions to local hospitals; emergency telephone numbers.
10. Project Specific Fire Protection and Prevention Program – Project specific procedures, including responsible staff, fire alarm system/methods, hot work procedures, etc.
11. Housekeeping Procedure.
12. Project Specific Illumination Procedure.
13. Project Specific Sanitation Procedure.
14. Personal Protective Equipment (PPE), including Respiratory Protection Program and Hearing Conservation Program, if required.
15. Hazard Communication Program – Contractor's Hazard Communication Program, responsible staff; training; SDS records, project specific list of chemicals; location of the program and SDS records.
16. Means of Egress – Information regarding free and unobstructed egress from all parts of the building or structure; exit marking; maintenance of means of egress, etc.
17. Employee Emergency Action Plan – Project specific: responsible staff, emergency alarm system/devices, evacuation procedure, procedure to account for employees after evacuation, etc.
18. Evacuation Plan – Project specific evacuation plan (drawing/scheme) with exists and evacuation routes.
19. Ionizing/Nonionizing Radiation – Competent person, license and qualification requirements, type of radiation, employee's exposure and protection, safety procedures, etc.

20. Material Handling, Storage, Use and Disposal – Project specific information regarding material storage, disposal, and handling: procedures, plan/drawings, etc.
21. Signs, Signals, and Barricades – Use of danger/warning signs, safety instruction signs, sidewalk closure and pedestrian fencing and barricades (if not included in the MPT plan), etc.
22. Tools – Hand and Power – Safety procedures for the type of tools to be used.
23. Scaffold – Project specific scaffold types, procedures, training requirements, scaffold drawings, designed, sealed, and signed by NYS Licensed Professional Engineer, or as otherwise directed; competent person, criteria for project specific scaffold, falling object protection, procedures for aerial lifts/scissor lifts.
24. Welding and Cutting – Project specific procedure for welding and cutting, including all necessary safety requirements such as fire prevention, personal protective equipment, hot work permits (if not covered by Contractor's Fire Prevention and Protection program, FDNY certificate requirements).
25. Electrical Safety – Project specific procedures, including lock out-tag out.
26. Fall Protection – Project specific information regarding selected fall protection systems, fall protection plan, responsible staff.
27. Cranes, Derrick, Hoists, Elevators, Conveyors – project specific equipment information including type, rated load capacity, manufacture specification requirements, competent person, exposure to falling load, inspection, recordkeeping, clearance requirements, communication procedure, ground lines, permits.
28. Excavation Safety – Competent person; excavation procedures; project specific protective system, including drawings, designed, sealed, and signed by NYS Licensed Professional Engineer, or as otherwise directed.
29. Protection of Underground Facilities and Utilities Procedure, including responsible staff and responsibilities.
30. Concrete and Masonry Construction Procedures
31. Maintenance and Protection of Traffic Plan – Project specific MPT plan, designed, sealed, and signed by NYS Licensed Professional Engineer, or as otherwise directed; flagmen training, public safety, etc.
32. Steel Erection – Site specific erection plan, requirements for applicable written notifications, competent person, fall protection plan, training requirements, etc.
33. Demolition – Engineering survey, including written evidence, disconnection of all effected utilities, identification of all hazardous chemicals, materials, gases, etc., floor openings, chutes, inspection and maintenance of all stairs/passageways, removal of materials/debris/structural elements, lock out/tag out, competent person.
34. Blasting and the Use of Explosives – Project specific safety procedures, warning signs, training/qualification, transportation, storage and use of explosives, inspection.
35. Stairways and Ladders – Types of stairs and ladders, safety procedures, training requirements.
36. Alcohol and Drug Abuse Policy
37. Rodents and Vermin Controls
38. Toxic and Hazardous Substances – Safety procedures for substances that Contractor's and subcontractor's employees can be exposed on project.
39. Noise Mitigation Plan – Completed project specific Noise Mitigation Plan, and noise mitigation procedures.
40. Confined Space Program – Project specific Confined Space Program, responsible staff, training records, equipment information, rescue procedure, list of project specific confined spaces, forms.
41. Construction Vehicles/Heavy Equipment – Type of construction vehicles/heavy equipment to be used on site, procedures
42. Dust Mitigation Plan – Completed project specific Dust Mitigation Plan, and dust mitigation procedures.
43. Working Over and Near Water. Diving Operations – safety procedures including personal protective equipment, fall protection, rescue services, etc.

The most critical component of the Site Safety Plan is the Job Hazard Analysis (JHA) section. The JHA form is a written document prepared by the Contractor. The Contractor will conduct a site and task assessment to identify the tasks and any potential safety or environmental hazards related to performance of the work, eliminate or implement controls for the potential hazards, and identify proper personal protective equipment for the task. The JHA will be communicated to all Contractor/subcontractor personnel on site. The JHA will include safety hazard identification and controls to protect employees, general public, and property.

The initial JHA will be included in the Contractor's Site Safety Plan and the current JHA form will be available at the construction site for reference. A JHA is a living document that will be re-evaluated and revised to address new hazards and tasks that may develop and will be present at the worksite and produced upon request.

VII. KICK-OFF MEETINGS/PRE-CONSTRUCTION AND SAFETY REVIEW

Prior to the start of construction activities on all DDC projects, RE will invite the Construction Safety Unit to the construction kick-off meeting. The Construction Safety Unit representative(s) will participate in this meeting with the Contractor and RE for the purpose of:

A. Reviewing DDC Contract Safety Requirements
B. Reviewing site-specific safety issues based on a project work scope, location, and any other factors which may impact safety of workers and general public.
C. Reviewing the Site Safety Plan and JHA requirements.
D. Reviewing Accident/Incident reporting and investigation procedures.
E. Reviewing designated safety contacts, roles, and responsibilities.
F. Discussing planned inspections and audits of the site by Construction Safety Unit personnel.

VIII. EVALUATION DURING WORK IN PROGRESS

The Contractor's adherence to these Safety Requirements will be monitored throughout the project. This will be accomplished by the following:

A. Use of a safety checklist by a representative of the Construction Safety Unit (or other designated DDC representative) and the RE during regular inspections and comprehensive audits of the job site. Field Exit Conferences will be held with the RE and Contractor Project Safety Representatives.
B. The RE will continually monitor the safety and environmental performance of the Contractor's employees and work methods. Deficiencies will be brought to the attention of the Contractor's Project Safety Representative on site for immediate correction. The RE will maintain a written record of these deficiencies and have these records available upon request. Any critical deficiencies will be immediately reported to the Construction Safety Unit via telephone (718)391-1911.
C. If the Contractor's safety performance during the project is not up to DDC standards (safety performance measure, accident/incident rate, etc.) the Director – Construction Safety, or his/her designee will meet with the Contractor's Project Safety Representative and other representatives, the RE, and the DDC Environmental Specialist (if environmental issues are involved). The purpose of this meeting is to 1) determine the level of non-compliance; 2) explain and clarify the safety/environmental provisions; 3) agree on a future course of action to correct the deficiencies.
D. If the deficiencies continue, the Commissioner may, without limitation, declare the Contractor in default.
E. The Contractor will within 1 hour inform the RE of all accidents/incidents/near misses including all fatalities, any injuries to employees or members of the general public, and property damage (e.g., structural damage, equipment rollovers, utility damage, loads dropped from crane). The RE will notify the Construction Safety Unit as per DDC's Construction Safety Emergency and Accident Notification and Response Procedure and will maintain a record of all Contractor accidents/incidents for the project.
F. The Contractor and the RE will notify the Construction Safety Unit within two (2) hours of the start of any NYS-DOL/ NYC-COSH/ OSHA/ EPA inspections.

IX. SAFETY PERFORMANCE EVALUATION

The Contractor's safety record, including accident/incident history and DDC safety inspection results, will be considered as part of the Contractor's performance evaluation at the conclusion of the project. Poor safety performance during the course of the project will be a reason to rate a Contractor unsatisfactory which may be reflected in the City's PASSPort system and will be considered for future procurement actions as set forth in the City's Procurement Policy Board Rules.

CITY OF NEW YORK

STANDARD CONSTRUCTION CONTRACT

March 2017

(NO TEXT ON THIS PAGE)

CITY OF NEW YORK
STANDARD CONSTRUCTION CONTRACT

TABLE OF CONTENTS

CHAPTER I: THE CONTRACT AND DEFINITIONS 1
ARTICLE 1. THE CONTRACT 1
ARTICLE 2. DEFINITIONS 1
CHAPTER II: THE WORK AND ITS PERFORMANCE 4
ARTICLE 3. CHARACTER OF THE WORK 4
ARTICLE 4. MEANS AND METHODS OF CONSTRUCTION 4
ARTICLE 5. COMPLIANCE WITH LAWS 5
ARTICLE 6. INSPECTION 10
ARTICLE 7. PROTECTION OF WORK AND OF PERSONS AND PROPERTY; NOTICES AND INDEMNIFICATION 11
CHAPTER III: TIME PROVISIONS 12
ARTICLE 8. COMMENCEMENT AND PROSECUTION OF THE WORK 12
ARTICLE 9. PROGRESS SCHEDULES 13
ARTICLE 10. REQUESTS FOR INFORMATION OR APPROVAL 13
ARTICLE 11. NOTICE OF CONDITIONS CAUSING DELAY AND DOCUMENTATION OF DAMAGES CAUSED BY DELAY 14
ARTICLE 12. COORDINATION WITH OTHER CONTRACTORS 18
ARTICLE 13. EXTENSION OF TIME FOR PERFORMANCE 19
ARTICLE 14. COMPLETION AND FINAL ACCEPTANCE OF THE WORK 21
ARTICLE 15. LIQUIDATED DAMAGES 23
ARTICLE 16. OCCUPATION OR USE PRIOR TO COMPLETION 23
CHAPTER IV: SUBCONTRACTS AND ASSIGNMENTS 24
ARTICLE 17. SUBCONTRACTS 24
ARTICLE 18. ASSIGNMENTS 26
CHAPTER V: CONTRACTOR'S SECURITY AND GUARANTEE 26
ARTICLE 19. SECURITY DEPOSIT 26
ARTICLE 20. PAYMENT GUARANTEE 27
ARTICLE 21. RETAINED PERCENTAGE 29
ARTICLE 22. INSURANCE 30
ARTICLE 23. MONEY RETAINED AGAINST CLAIMS 36
ARTICLE 24. MAINTENANCE AND GUARANTY 37
CHAPTER VI: CHANGES, EXTRA WORK, AND DOCUMENTATION OF CLAIM 38
ARTICLE 25. CHANGES 38
ARTICLE 26. METHODS OF PAYMENT FOR OVERRUNS AND EXTRA WORK 38
ARTICLE 27. RESOLUTION OF DISPUTES 41
ARTICLE 28. RECORD KEEPING FOR EXTRA OR DISPUTED WORK OR WORK ON A TIME & MATERIALS BASIS 45
ARTICLE 29. OMITTED WORK 46
ARTICLE 30. NOTICE AND DOCUMENTATION OF COSTS AND DAMAGES; PRODUCTION OF FINANCIAL RECORDS 46
CHAPTER VII: POWERS OF THE RESIDENT ENGINEER,THE ENGINEER OR ARCHITECT AND THE COMMISSIONER 48
ARTICLE 31. THE RESIDENT ENGINEER 48
ARTICLE 32. THE ENGINEER OR ARCHITECT OR PROJECT MANAGER 48
ARTICLE 33. THE COMMISSIONER 48
ARTICLE 34. NO ESTOPPEL 49
CHAPTER VIII: LABOR PROVISIONS 49
ARTICLE 35. EMPLOYEES 49
ARTICLE 36. NO DISCRIMINATION 57
ARTICLE 37. LABOR LAW REQUIREMENTS 59

ARTICLE 38. PAYROLL REPORTS 64
ARTICLE 39. DUST HAZARDS 64
CHAPTER IX: PARTIAL AND FINAL PAYMENTS 65
ARTICLE 40. CONTRACT PRICE 65
ARTICLE 41. BID BREAKDOWN ON LUMP SUM 65
ARTICLE 42. PARTIAL PAYMENTS 65
ARTICLE 43. PROMPT PAYMENT 66
ARTICLE 44. SUBSTANTIAL COMPLETION PAYMENT 66
ARTICLE 45. FINAL PAYMENT 67
ARTICLE 46. ACCEPTANCE OF FINAL PAYMENT 68
ARTICLE 47. APPROVAL BY PUBLIC DESIGN COMMISSION 69
CHAPTER X: CONTRACTOR'S DEFAULT 69
ARTICLE 48. COMMISSIONER'S RIGHT TO DECLARE CONTRACTOR IN DEFAULT 69
ARTICLE 49. EXERCISE OF THE RIGHT TO DECLARE DEFAULT 71
ARTICLE 50. QUITTING THE SITE 71
ARTICLE 51. COMPLETION OF THE WORK 71
ARTICLE 52. PARTIAL DEFAULT 71
ARTICLE 53. PERFORMANCE OF UNCOMPLETED WORK 72
ARTICLE 54. OTHER REMEDIES 72
CHAPTER XI: MISCELLANEOUS PROVISIONS 72
ARTICLE 55. CONTRACTOR'S WARRANTIES 72
ARTICLE 56. CLAIMS AND ACTIONS THEREON 73
ARTICLE 57. INFRINGEMENT 73
ARTICLE 58. NO CLAIM AGAINST OFFICIALS, AGENTS OR EMPLOYEES 74
ARTICLE 59. SERVICE OF NOTICES 74
ARTICLE 60. UNLAWFUL PROVISIONS DEEMED STRICKEN FROM CONTRACT 74
ARTICLE 61. ALL LEGAL PROVISIONS DEEMED INCLUDED 74
ARTICLE 62. TAX EXEMPTION 74
ARTICLE 63. INVESTIGATION(S) CLAUSE 76
ARTICLE 64. TERMINATION BY THE CITY 78
ARTICLE 65. CHOICE OF LAW, CONSENT TO JURISDICTION AND VENUE 80
ARTICLE 66. PARTICIPATION IN AN INTERNATIONAL BOYCOTT 81
ARTICLE 67. LOCALLY BASED ENTERPRISE PROGRAM 82
ARTICLE 68. ANTITRUST 82
ARTICLE 69. MACBRIDE PRINCIPLES PROVISIONS 83
ARTICLE 70. ELECTRONIC FILING/NYC DEVELOPMENT HUB 85
ARTICLE 71. PROHIBITION OF TROPICAL HARDWOODS 85
ARTICLE 72. CONFLICTS OF INTEREST 85
ARTICLE 73. MERGER CLAUSE 85
ARTICLE 74. STATEMENT OF WORK 85
ARTICLE 75. COMPENSATION TO BE PAID TO CONTRACTOR 85
ARTICLE 76. ELECTRONIC FUNDS TRANSFER 85
ARTICLE 77. RECORDS RETENTION 86
ARTICLE 78. EXAMINATION AND VIEWING OF SITE, CONSIDERATION OF OTHER SOURCES OF INFORMATION AND CHANGED SITE CONDITIONS 86

ARTICLE 79: PARTICIPATION BY MINORITY-OWNED AND WOMEN-OWNED BUSINESS ENTERPRISES IN CITY PROCUREMENT 87

SIGNATURES 95

ACKNOWLEDGMENT BY CORPORATION 96
ACKNOWLEDGMENT BY PARTNERSHIP.....96
ACKNOWLEDGMENT BY INDIVIDUAL 96

ACKNOWLEDGMENT BY COMMISSIONER 97

AUTHORITY 98
COMPTROLLER'S CERTIFICATE 98
MAYOR'S CERTIFICATE 99
PERFORMANCE BOND #1 100
PERFORMANCE BOND #2.....104
PAYMENT BOND 108

(NO TEXT ON THIS PAGE)

WITNESSETH:

The parties, in consideration of the mutual agreements contained herein, agree as follows:

CHAPTER I: THE CONTRACT AND DEFINITIONS

ARTICLE 1. THE CONTRACT

1.1 Except for titles, subtitles, headings, running headlines, tables of contents and indices (all of which are printed herein merely for convenience), the following, except for such portions thereof as may be specifically excluded, shall be deemed to be part of this **Contract**:

1.1.1 All provisions required by law to be inserted in this **Contract**, whether actually inserted or not;

1.1.2 The Contract Drawings and Specifications;

1.1.3 The General Conditions and Special Conditions, if any;

1.1.4 The **Contract**;

1.1.5 The Information for Bidders; Request for Proposals; Notice of Solicitation and Proposal For Bids; Bid or Proposal, and, if used, the Bid Booklet;

1.1.6 All Addenda issued prior to the receipt of the bids; the Notice of Award; Performance and Payment Bonds, if required; and the Notice to Proceed or the Order to Work.

1.2 Should any conflict occur in or between the Drawings and Specifications, the **Contractor** shall be deemed to have estimated the most expensive way of doing the **Work**, unless the **Contractor** shall have asked for and obtained a decision in writing from the **Commissioner** of the **Agency** that is entering into this **Contract**, before the submission of its bid, as to what shall govern.

ARTICLE 2. DEFINITIONS

2.1 The following words and expressions, or pronouns used in their stead, shall, wherever they appear in this Contract, be construed as follows, unless a different meaning is clear from the context:

2.1.1 **"Addendum"** or **"Addenda"** shall mean the additional Contract provisions and/or technical clarifications issued in writing by the Commissioner prior to the receipt of bids.

2.1.2 **"Agency"** shall mean a city, county, borough or other office, position, department, division, bureau, board or commission, or a corporation, institution or agency of government, the expenses of which are paid in whole or in part from the City treasury.

2.1.3 **"Agency Chief Contracting Officer" (ACCO)** shall mean a person delegated authority by the Commissioner to organize and supervise the procurement activity of subordinate Agency staff in conjunction with the CCPO, or his/her duly authorized representative.

2.1.4 **"Allowance"** shall mean a sum of money which the Agency may include in the total amount of the Contract for such specific contingencies as the Agency believes may be necessary to complete the Work, *e.g.*, lead or asbestos remediation, and for which the Contractor will be paid on the basis of stipulated unit prices or a formula set forth in the Contract or negotiated between the parties provided, however, that if the Contractor is not directed to use the Allowance, the Contractor shall have no right to such money and it shall be deducted from the total amount of the Contract.

2.1.5 **"City"** shall mean the City of New York.

2.1.6 **"City Chief Procurement Officer" (CCPO)** shall mean a person delegated authority by the Mayor to coordinate and oversee the procurement activity of Mayoral agency staff, including the ACCO and any offices which have oversight responsibility for the procurement of construction, or his/her duly authorized representative.

2.1.7 **"Commissioner"** shall mean the head of the Agency that has entered into this Contract, or his/her duly authorized representative.

2.1.8 **"Comptroller"** shall mean the Comptroller of the City of New York.

2.1.9 **"Contract"** or **"Contract Documents"** shall mean each of the various parts of the contract referred to in Article 1 hereof, both as a whole and severally.

2.1.10 **"Contract Drawings"** shall mean only those drawings specifically entitled as such and listed in the Specifications or in any Addendum, or any drawings furnished by the Commissioner, pertaining or supplemental thereto.

2.1.11 **"Contract Work"** shall mean everything required to be furnished and done by the Contractor by any one or more of the parts of the Contract referred to in Article 1, except Extra Work as hereinafter defined.

2.1.12 **"Contractor"** shall mean the entity which executed this Contract, whether a corporation, firm, partnership, joint venture, individual, or any combination thereof, and its, their, his/her successors, personal representatives, executors, administrators, and assigns, and any person, firm, partnership, joint venture, individual, or corporation which shall at any time be substituted in the place of the Contractor under this Contract.

2.1.13 **"Days"** shall mean calendar days, except where otherwise specified.

2.1.14 **"Engineer"** or **"Architect"** or **"Project Manager"** shall mean the person so designated in writing by the Commissioner in the Notice to Proceed or the Order to Work to act as such in relation to this Contract, including a private Architect or Engineer or Project Manager, as the case may be. Subject to written approval by the Commissioner, the Engineer, Architect or Project Manager may designate an authorized representative.

2.1.15 **"Engineering Audit Officer" (EAO)** shall mean the person so designated by the Commissioner to perform responsible auditing functions hereunder.

2.1.16 **"Extra Work"** shall mean Work other than that required by the Contract at the time of award which is authorized by the Commissioner pursuant to Chapter VI of this Contract.

2.1.17 **"Federal-Aid Contract"** shall mean a contract in which the United States (federal) Government provides financial funding as so designated in the Information for Bidders.

2.1.18 **"Final Acceptance"** shall mean final written acceptance of all the Work by the Commissioner, a copy of which shall be sent to the Contractor.

2.1.19 **"Final Approved Punch List"** shall mean a list, approved pursuant to Article 14.2.2, specifying those items of Work to be completed by the Contractor after Substantial Completion and dates for the completion of each item of Work.

2.1.20 **"Law"** or **"Laws"** shall mean the Constitution of the State of New York, the New York City Charter, the New York City Administrative Code, a statute of the United States or of the State of New York, a local law of the City of New York, any ordinance, rule or regulation having the force of law, or common law.

2.1.21 **"Materialman"** shall mean any corporation, firm, partnership, joint venture, or individual, other than employees of the Contractor, who or which contracts with the Contractor or any Subcontractor, to fabricate or deliver, or who actually fabricates or delivers, plant, materials or equipment to be incorporated in the Work.

2.1.22 **"Means and Methods of Construction"** shall mean the labor, materials, temporary structures, tools, plant, and construction equipment, and the manner and time of their use, necessary to accomplish the result intended by this Contract.

2.1.23**"Notice to Proceed" or "Order to Work"** shall mean the written notice issued by the Commissioner specifying the time for commencement of the Work and the Engineer, Architect or Project Manager.

2.1.24 **"Other Contractor(s)"** shall mean any contractor (other than the entity which executed this Contract or its Subcontractors) who or which has a contract with the City for work on or adjacent to the building or Site of the Work.

2.1.25 **"Payroll Taxes"** shall mean State Unemployment Insurance (SUI), Federal Unemployment Insurance (FUI), and payments pursuant to the Federal Insurance Contributions Act (FICA).

2.1.26 **"Project"** shall mean the public improvement to which this Contract relates.

2.1.27 **"Procurement Policy Board" (PPB)** shall mean the Agency of the City of New York whose function is to establish comprehensive and consistent procurement policies and rules which shall have broad application throughout the City.

2.1.28 **"Required Quantity"** in a unit price Contract shall mean the actual quantity of any item of Work or materials which is required to be performed or furnished in order to comply with the Contract.

2.1.29 **"Resident Engineer"** shall mean the representative of the Commissioner duly designated by the Commissioner to be his/her representative at the site of the Work.

2.1.30 **"Site"** shall mean the area upon or in which the Contractor's operations are carried on, and such other areas adjacent thereto as may be designated as such by the Engineer.

2.1.31 **"Small Tools"** shall mean items that are ordinarily required for a worker's job function, including but not limited to, equipment that ordinarily has no licensing, insurance or substantive storage costs associated with it; such as circular and chain saws, impact drills, threaders, benders, wrenches, socket tools, etc.

2.1.32 **"Specifications"** shall mean all of the directions, requirements, and standards of performance applying to the Work as hereinafter detailed and designated under the Specifications.

2.1.33 **"Subcontractor"** shall mean any person, firm or corporation, other than employees of the Contractor, who or which contracts with the Contractor or with its subcontractors to furnish, or actually furnishes labor, or labor and materials, or labor and equipment, or superintendence, supervision and/or management at the Site. Wherever the word Subcontractor appears, it shall also mean sub-Subcontractor.

2.1.34 **"Substantial Completion"** shall mean the written determination by the Engineer that the Work required under this Contract is substantially, but not entirely, complete and the approval of the **Final Approved Punch List**.

2.1.35 **"Work"** shall mean all services required to complete the Project in accordance with the Contract Documents, including without limitation, labor, material, superintendence, management, administration, equipment, and incidentals, and obtaining any and all permits, certifications and licenses as may be necessary and required to complete the Work, and shall include both Contract Work and Extra Work.

CHAPTER II: THE WORK AND ITS PERFORMANCE

ARTICLE 3. CHARACTER OF THE WORK

3.1 Unless otherwise expressly provided in the **Contract Drawings**, **Specifications,** and **Addenda**, the **Work** shall be performed in accordance with the best modern practice, utilizing, unless otherwise specified in writing, new and unused materials of standard first grade quality and workmanship and design of the highest quality, to the satisfaction of the **Commissioner**.

ARTICLE 4. MEANS AND METHODS OF CONSTRUCTION

4.1 Unless otherwise expressly provided in the **Contract Drawings**, **Specifications,** and **Addenda**, the **Means and Methods of Construction** shall be such as the **Contractor** may choose; subject, however, to the **Engineer's** right to reject the **Means and Methods of Construction** proposed by the **Contractor** which in the opinion of the **Engineer**:

4.1.1 Will constitute or create a hazard to the **Work**, or to persons or property; or

4.1.2 Will not produce finished **Work** in accordance with the terms of the **Contract**; or

4.1.3 Will be detrimental to the overall progress of the **Project**.

4.2 The **Engineer's** approval of the **Contractor's Means and Methods of Construction**, or his/her failure to exercise his/her right to reject such means or methods, shall not relieve the **Contractor**

of its obligation to complete the **Work** as provided in this **Contract**; nor shall the exercise of such right to reject create a cause of action for damages.

ARTICLE 5. COMPLIANCE WITH LAWS

5.1 The **Contractor** shall comply with all **Laws** applicable to this **Contract** and to the **Work** to be done hereunder.

5.2 Procurement Policy Board Rules: This **Contract** is subject to the Rules of the **PPB** ("**PPB** Rules") in effect at the time of the bid opening for this **Contract**. In the event of a conflict between the **PPB** Rules and a provision of this **Contract**, the **PPB** Rules shall take precedence.

5.3 Noise Control Code provisions.

5.3.1 In accordance with the provisions of Section 24-216(b) of the Administrative Code of the **City** ("Administrative Code"), Noise Abatement Contract Compliance, devices and activities which will be operated, conducted, constructed or manufactured pursuant to this **Contract** and which are subject to the provisions of the **City** Noise Control Code shall be operated, conducted, constructed, or manufactured without causing a violation of the Administrative Code. Such devices and activities shall incorporate advances in the art of noise control development for the kind and level of noise emitted or produced by such devices and activities, in accordance with regulations issued by the **Commissioner** of the **City** Department of Environmental Protection.

5.3.2 The **Contractor** agrees to comply with Section 24-219 of the Administrative Code and implementing rules codified at 15 Rules of the City of New York ("RCNY") Section 28-100 *et seq*. In accordance with such provisions, the **Contractor**, if the **Contractor** is the responsible party under such regulations, shall prepare and post a Construction Noise Mitigation Plan at each **Site**, in which the **Contractor** shall certify that all construction tools and equipment have been maintained so that they operate at normal manufacturers operating specifications. If the **Contractor** cannot make this certification, it must have in place an Alternative Noise Mitigation Plan approved by the **City** Department of Environmental Protection. In addition, the **Contractor**'s certified Construction Noise Mitigation Plan is subject inspection by the **City** Department of Environmental Protection in accordance with Section 28-101 of Title 15 of RCNY. No **Contract Work** may take place at a **Site** unless there is a Construction Noise Mitigation Plan or approved Alternative Noise Mitigation Plan in place. In addition, the **Contractor** shall create and implement a noise mitigation training program. Failure to comply with these requirements may result in fines and other penalties pursuant to the applicable provisions of the Administrative Code and RCNY.

5.4 Ultra Low Sulfur Diesel Fuel: In accordance with the provisions of Section 24-163.3 of the Administrative Code, the **Contractor** specifically agrees as follows:

5.4.1 Definitions. For purposes of this Article 5.4, the following definitions apply:

5.4.1(a) "Contractor" means any person or entity that enters into a Public Works Contract with a **City Agency**, or any person or entity that enters into an agreement with such person or entity, to perform work or provide labor or services related to such Public Works Contract.

5.4.1(b) "Motor Vehicle" means any self-propelled vehicle designed for transporting persons or property on a street or highway.

5.4.1(c) "Nonroad Engine" means an internal combustion engine (including the fuel system) that is not used in a Motor Vehicle or a vehicle used solely for competition, or that is not subject to standards promulgated under Section 7411 or Section 7521 of Title 42 of the United States Code, except that this term shall apply to internal combustion engines used to power generators, compressors or similar equipment used in any construction program or project.

5.4.1(d) "Nonroad Vehicle" means a vehicle that is powered by a Nonroad Engine, fifty (50) horsepower and greater, and that is not a Motor Vehicle or a vehicle used solely for competition, which shall include, but not be limited to, excavators, backhoes, cranes, compressors, generators, bulldozers, and similar equipment, except that this term shall not apply to horticultural maintenance vehicles used for landscaping purposes that are powered by a Nonroad Engine of sixty-five (65) horsepower or less and that are not used in any construction program or project.

5.4.1(e) "Public Works Contract" means a contract with a **City Agency** for a construction program or project involving the construction, demolition, restoration, rehabilitation, repair, renovation, or abatement of any building, structure, tunnel, excavation, roadway, park or bridge; a contract with a **City Agency** for the preparation for any construction program or project involving the construction, demolition, restoration, rehabilitation, repair, renovation, or abatement of any building, structure, tunnel, excavation, roadway, park or bridge; or a contract with a **City Agency** for any final work involved in the completion of any construction program or project involving the construction, demolition, restoration, rehabilitation, repair, renovation, or abatement of any building, structure, tunnel, excavation, roadway, park or bridge.

5.4.1(f) "Ultra Low Sulfur Diesel Fuel" means diesel fuel that has a sulfur content of no more than fifteen parts per million (15 ppm).

5.4.2 Ultra Low Sulfur Diesel Fuel

5.4.2(a) All **Contractors** shall use Ultra Low Sulfur Diesel Fuel in diesel-powered Nonroad Vehicles in the performance of this **Contract**.

5.4.2(b) Notwithstanding the requirements of Article 5.4.2(a), **Contractors** may use diesel fuel that has a sulfur content of no more than thirty parts per million (30 ppm) to fulfill the requirements of this Article 5.4.2, where the Commissioner of the **City** Department of Environmental Protection ("DEP Commissioner") has issued a determination that a sufficient quantity of Ultra Low Sulfur Diesel Fuel is not available to meet the needs of **Agencies** and **Contractors**. Any such determination shall expire after six (6) months unless renewed.

5.4.2(c) **Contractors** shall not be required to comply with this Article 5.4.2 where the **City Agency** letting this **Contract** makes a written finding, which is approved, in writing, by the DEP Commissioner, that a sufficient quantity of Ultra Low Sulfur Diesel Fuel, or diesel fuel that has a sulfur content of no more than thirty parts per million (30 ppm) is not available to meet the requirements of Section 24-163.3 of the Administrative Code, provided that such **Contractor** in its fulfillment of the

requirements of this **Contract**, to the extent practicable, shall use whatever quantity of Ultra Low Sulfur Diesel Fuel or diesel fuel that has a sulfur content of no more than thirty parts per million (30 ppm) is available. Any finding made pursuant to this Article 5.4.2(c) shall expire after sixty (60) **Days**, at which time the requirements of this Article 5.4.2 shall be in full force and effect unless the **City Agency** renews the finding in writing and such renewal is approved by the DEP Commissioner.

5.4.2(d) **Contractors** may check on determinations and approvals issued by the DEP Commissioner pursuant to Section 24-163.3 of the Administrative Code, if any, at www.dep.nyc.gov or by contacting the **City Agency** letting this **Contract**.

5.4.2(e) The requirements of this Article 5.4.2 do not apply where they are precluded by federal or State funding requirements or where the **Contract** is an emergency procurement.

5.4.3 Best Available Technology

5.4.3(a) All **Contractors** shall utilize the best available technology for reducing the emission of pollutants for diesel-powered Nonroad Vehicles in the performance of this **Contract**. For determinations of best available technology for each type of diesel-powered Nonroad Vehicle, **Contractors** shall comply with the regulations of the **City** Department of Environmental Protection, as and when adopted, Chapter 14 of Title 15 of the Rules of the City of New York (RCNY). The **Contractor** shall fully document all steps in the best available technology selection process and shall furnish such documentation to the **City Agency** or the DEP Commissioner upon request. The **Contractor** shall retain all documentation generated in the best available technology selection process for as long as the selected best available technology is in use.

5.4.3(b) No **Contractor** shall be required to replace best available technology for reducing the emission of pollutants or other authorized technology utilized for a diesel-powered Nonroad Vehicle in accordance with the provisions of this Article 5.4.3 within three (3) years of having first utilized such technology for such vehicle.

5.4.3(c) This Article 5.4.3 shall not apply to any vehicle used to satisfy the requirements of a specific Public Works Contract for fewer than twenty (20) **Days**.

5.4.3(d) The **Contractor** shall not be required to comply with this Article 5.4.3 with respect to a diesel-powered Nonroad Vehicle under the following circumstances:

5.4.3(d)(i) Where the **City Agency** makes a written finding, which is approved, in writing, by the DEP Commissioner, that the best available technology for reducing the emission of pollutants as required by this Article 5.4.3 is unavailable for such vehicle, the **Contractor** shall use whatever technology for reducing the emission of pollutants, if any, is available and appropriate for such vehicle.

5.4.3(d)(ii) Where the DEP Commissioner has issued a written waiver based upon the **Contractor** having demonstrated to the DEP Commissioner that the use of the best available technology for reducing the emission of pollutants might endanger the operator of such vehicle or those working near such vehicle, due to engine malfunction, the **Contractor** shall use whatever technology for

reducing the emission of pollutants, if any, is available and appropriate for such vehicle, which would not endanger the operator of such vehicle or those working near such vehicle.

5.4.3(d)(iii) In determining which technology to use for the purposes of Articles 5.4.3(d)(i) and 5.4.3(d)(ii) above, the **Contractor** shall primarily consider the reduction in emissions of particulate matter and secondarily consider the reduction in emissions of nitrogen oxides associated with the use of such technology, which shall in no event result in an increase in the emissions of either such pollutant.

5.4.3(d)(iv) The **Contractor** shall submit requests for a finding or a waiver pursuant to this Article 5.4.3(d) in writing to the DEP Commissioner, with a copy to the **ACCO** of the **City Agency** letting this **Contract**. Any finding or waiver made or issued pursuant to Articles 5.4.3(d)(i) and 5.4.3(d)(ii) above shall expire after one hundred eighty (180) **Days**, at which time the requirements of Article 5.4.3(a) shall be in full force and effect unless the **City Agency** renews the finding, in writing, and the DEP Commissioner approves such finding, in writing, or the DEP Commissioner renews the waiver, in writing.

5.4.3(e) The requirements of this Article 5.4.3 do not apply where they are precluded by federal or State funding requirements or where the **Contract** is an emergency procurement.

5.4.4 Section 24-163 of the Administrative Code. The **Contractor** shall comply with Section 24-163 of the Administrative Code related to the idling of the engines of motor vehicles while parking.

5.4.5 Compliance

5.4.5(a) The **Contractor's** compliance with Article 5.4 may be independently monitored. If it is determined that the **Contractor** has failed to comply with any provision of Article 5.4, any costs associated with any independent monitoring incurred by the **City** shall be reimbursed by the **Contractor**.

5.4.5(b) Any **Contractor** who violates any provision of Article 5.4, except as provided in Article 5.4.5(c) below, shall be liable for a civil penalty between the amounts of one thousand ($1,000) and ten thousand ($10,000) dollars, in addition to twice the amount of money saved by such **Contractor** for failure to comply with Article 5.4.

5.4.5(c) No **Contractor** shall make a false claim with respect to the provisions of Article 5.4 to a **City Agency**. Where a **Contractor** has been found to have done so, such **Contractor** shall be liable for a civil penalty of twenty thousand ($20,000) dollars, in addition to twice the amount of money saved by such **Contractor** in association with having made such false claim.

5.4.6 Reporting

5.4.6(a) For all Public Works Contracts covered by this Article 5.4, the **Contractor** shall report to the **City Agency** the following information:

5.4.6(a)(i) The total number of diesel-powered Nonroad Vehicles used to fulfill the requirements of this Public Works Contract;

5.4.6(a)(ii) The number of such Nonroad Vehicles that were powered by Ultra Low Sulfur Diesel Fuel;

5.4.6(a)(iii) The number of such Nonroad Vehicles that utilized the best available technology for reducing the emission of pollutants, including a breakdown by vehicle model and the type of technology;

5.4.6(a)(iv) The number of such Nonroad Vehicles that utilized such other authorized technology in accordance with Article 5.4.3, including a breakdown by vehicle model and the type of technology used for each such vehicle;

5.4.6(a)(v) The locations where such Nonroad Vehicles were used; and

5.4.6(a)(vi) Where a determination is in effect pursuant to Article 5.4.2(b) or 5.4.2(c), detailed information concerning the **Contractor's** efforts to obtain Ultra Low Sulfur Diesel Fuel or diesel fuel that has a sulfur content of no more than thirty parts per million (30 ppm).

5.4.6(b) The **Contractor** shall submit the information required by Article 5.4.6(a) at the completion of **Work** under the Public Works Contract and on a yearly basis no later than August 1 throughout the term of the Public Works Contract. The yearly report shall cover **Work** performed during the preceding fiscal year (July 1 - June 30).

5.5 Ultra Low Sulfur Diesel Fuel. In accordance with the Coordinated Construction Act for Lower Manhattan, as amended:

5.5.1 Definitions. For purposes of this Article 5.5, the following definitions apply:

5.5.1(a) "Lower Manhattan" means the area to the south of and within the following lines: a line beginning at a point where the United States pierhead line in the Hudson River as it exists now or may be extended would intersect with the southerly line of West Houston Street in the Borough of Manhattan extended, thence easterly along the southerly side of West Houston Street to the southerly side of Houston Street, thence easterly along the southerly side of Houston Street to the southerly side of East Houston Street, thence northeasterly along the southerly side of East Houston Street to the point where it would intersect with the United States pierhead line in the East River as it exists now or may be extended, including tax lots within or immediately adjacent thereto.

5.5.1(b) "Lower Manhattan Redevelopment Project" means any project in Lower Manhattan that is funded in whole or in part with federal or State funding, or any project intended to improve transportation between Lower Manhattan and the two air terminals in the **City** known as LaGuardia Airport and John F. Kennedy International Airport, or between Lower Manhattan and the air terminal in Newark known as Newark Liberty International Airport, and that is funded in whole or in part with federal funding.

5.5.1(c) "Nonroad Engine" means an internal combustion engine (including the fuel system) that is not used in a Motor Vehicle or a vehicle used solely for competition, or that is not subject to standards promulgated under Section 7411 or Section 7521 of Title 42 of the United States Code, except that this term shall apply to internal combustion engines used to power generators, compressors or similar equipment used in any construction program or project.

5.5.1(d) "Nonroad Vehicle" means a vehicle that is powered by a Nonroad Engine, fifty (50) horsepower (HP) and greater, and that is not a Motor Vehicle or a vehicle used solely for competition, which shall include, but not be limited to, excavators, backhoes, cranes, compressors, generators, bulldozers, and similar equipment, except that this terms shall not apply to horticultural maintenance vehicles used for landscaping purposes that are powered by a Nonroad Engine of sixty-five (65) HP or less and that are not used in any construction program or project.

5.5.1(e) "Ultra Low Sulfur Diesel Fuel" means diesel fuel that has a sulfur content of no more than fifteen parts per million (15 ppm).

5.5.2 Requirements. **Contractors** and **Subcontractors** are required to use only Ultra Low Sulfur Diesel Fuel to power the diesel-powered Nonroad Vehicles with engine HP rating of fifty (50) HP and above used on a Lower Manhattan Redevelopment Project and, where practicable, to reduce the emission of pollutants by retrofitting such Nonroad Vehicles with oxidation catalysts, particulate filters, or technology that achieves lowest particulate matter emissions.

5.6 Pesticides. In accordance with Section 17-1209 of the Administrative Code, to the extent that the **Contractor** or any **Subcontractor** applies pesticides to any property owned or leased by the **City**, the **Contractor,** and any **Subcontractor** shall comply with Chapter 12 of the Administrative Code.

5.7 Waste Treatment, Storage, and Disposal Facilities and Transporters. In connection with the **Work**, the **Contractor** and any **Subcontractor** shall use only those waste treatment, storage, and disposal facilities and waste transporters that possess the requisite license, permit or other governmental approval necessary to treat, store, dispose, or transport the waste, materials or hazardous substances.

5.8 Environmentally Preferable Purchasing. The **Contractor** shall ensure that products purchased or leased by the **Contractor** or any **Subcontractor** for the **Work** that are not specified by the **City** or are submitted as equivalents to a product specified by the **City** comply with the requirements of the New York City Environmentally Preferable Purchasing Program contained in Chapter 11 of Title 43 of the RCNY, pursuant to Chapter 3 of Title 6 of the Administrative Code.

ARTICLE 6. INSPECTION

6.1 During the progress of the **Work** and up to the date of **Final Acceptance**, the **Contractor** shall at all times afford the representatives of the **City** every reasonable, safe, and proper facility for inspecting all **Work** done or being done at the **Site** and also for inspecting the manufacture or preparation of materials and equipment at the place of such manufacture or preparation.

6.2 The **Contractor's** obligation hereunder shall include the uncovering or taking down of finished **Work** and its restoration thereafter; provided, however, that the order to uncover, take down and restore shall be in writing, and further provided that if **Work** thus exposed proves satisfactory, and if the **Contractor** has complied with Article 6.1, such uncovering or taking down and restoration shall be

considered an item of **Extra Work** to be paid for in accordance with the provisions of Article 26. If the **Work** thus exposed proves unsatisfactory, the **City** has no obligation to compensate the **Contractor** for the uncovering, taking down or restoration.

6.3 Inspection and approval by the **Commissioner**, the **Engineer**, **Project Manager**, or **Resident Engineer**, of finished **Work** or of **Work** being performed, or of materials and equipment at the place of manufacture or preparation, shall not relieve the **Contractor** of its obligation to perform the **Work** in strict accordance with the **Contract**. Finished or unfinished **Work** not found to be in strict accordance with the **Contract** shall be replaced as directed by the **Engineer**, even though such **Work** may have been previously approved and paid for. Such corrective **Work** is **Contract Work** and shall not be deemed **Extra Work**.

6.4 Rejected **Work** and materials shall be promptly taken down and removed from the **Site**, which must at all times be kept in a reasonably clean and neat condition.

ARTICLE 7. PROTECTION OF WORK AND OF PERSONS AND PROPERTY; NOTICES AND INDEMNIFICATION

7.1 During the performance of the **Work** and up to the date of **Final Acceptance**, the **Contractor** shall be under an absolute obligation to protect the finished and unfinished **Work** against any damage, loss, injury, theft and/or vandalism and in the event of such damage, loss, injury, theft and/or vandalism, it shall promptly replace and/or repair such **Work** at the **Contractor's** sole cost and expense, as directed by the **Resident Engineer**. The obligation to deliver finished **Work** in strict accordance with the **Contract** prior to **Final Acceptance** shall be absolute and shall not be affected by the **Resident Engineer's** approval of, or failure to prohibit, the **Means and Methods of Construction** used by the **Contractor**.

7.2 During the performance of the **Work** and up to the date of **Final Acceptance**, the **Contractor** shall take all reasonable precautions to protect all persons and the property of the **City** and of others from damage, loss or injury resulting from the **Contractor's**, and/or its **Subcontractors'** operations under this **Contract.** The **Contractor's** obligation to protect shall include the duty to provide, place or replace, and adequately maintain at or about the **Site** suitable and sufficient protection such as lights, barricades, and enclosures.

7.3 The **Contractor** shall comply with the notification requirements set forth below in the event of any loss, damage or injury to **Work**, persons or property, or any accidents arising out of the operations of the **Contractor** and/or its **Subcontractors** under this **Contract**.

7.3.1 The **Contractor** shall make a full and complete report in writing to the **Resident Engineer** within three (3) **Days** after the occurrence.

7.3.2 The **Contractor** shall also send written notice of any such event to all insurance carriers that issued potentially responsive policies (including commercial general liability insurance carriers for events relating to the **Contractor**'s own employees) no later than twenty (20) days after such event and again no later than twenty (20) days after the initiation of any claim and/or action resulting therefrom. Such notice shall contain the following information: the number of the insurance policy, the name of the Named Insured, the date and location of the incident, and the identity of the persons injured or property damaged. For any policy on which the **City** and/or the **Engineer**, **Architect**, or **Project Manager** are Additional Insureds, such notice shall expressly specify that "this notice is

being given on behalf of the City of New York as Additional Insured, such other Additional Insureds, as well as the Named Insured."

7.3.2(a) Whenever such notice is sent under a policy on which the **City** is an Additional Insured, the **Contractor** shall provide copies of the notice to the **Comptroller,** the **Commissioner** and the **City** Corporation Counsel. The copy to the **Comptroller** shall be sent to the Insurance Unit, NYC Comptroller's Office, 1 Centre Street – Room 1222, New York, New York, 10007. The copy to the **Commissioner** shall be sent to the address set forth in Schedule A of the General Conditions. The copy to the **City** Corporation Counsel shall be sent to Insurance Claims Specialist, Affirmative Litigation Division, New York City Law Department, 100 Church Street, New York, New York 10007.

7.3.2(b) If the **Contractor** fails to provide any of the foregoing notices to any appropriate insurance carrier(s) in a timely and complete manner, the **Contractor** shall indemnify the **City** for all losses, judgments, settlements, and expenses, including reasonable attorneys' fees, arising from an insurer's disclaimer of coverage citing late notice by or on behalf of the **City**.

7.4 To the fullest extent permitted by law, the **Contractor** shall defend, indemnify, and hold the **City**, its employees, and officials (the "Indemnitees") harmless against any and all claims (including but not limited to claims asserted by any employee of the **Contractor** and/or its **Subcontractors**) and costs and expenses of whatever kind (including but not limited to payment or reimbursement of attorneys' fees and disbursements) allegedly arising out of or in any way related to the operations of the **Contractor** and/or its **Subcontractors** in the performance of this **Contract** or from the **Contractor's** and/or its **Subcontractors'** failure to comply with any of the provisions of this **Contract** or of the **Law**. Such costs and expenses shall include all those incurred in defending the underlying claim and those incurred in connection with the enforcement of this Article 7.4 by way of cross-claim, third-party claim, declaratory action or otherwise. The parties expressly agree that the indemnification obligation hereunder contemplates (1) full indemnity in the event of liability imposed against the Indemnitees without negligence and solely by reason of statute, operation of **Law** or otherwise; and (2) partial indemnity in the event of any actual negligence on the part of the Indemnitees either causing or contributing to the underlying claim (in which case, indemnification will be limited to any liability imposed over and above that percentage attributable to actual fault whether by statute, by operation of **Law**, or otherwise). Where partial indemnity is provided hereunder, all costs and expenses shall be indemnified on a pro rata basis.

7.4.1 Indemnification under Article 7.4 or any other provision of the **Contract** shall operate whether or not **Contractor** or its **Subcontractors** have placed and maintained the insurance specified under Article 22.

7.5 The provisions of this Article 7 shall not be deemed to create any new right of action in favor of third parties against the **Contractor** or the **City**.

CHAPTER III: TIME PROVISIONS

ARTICLE 8. COMMENCEMENT AND PROSECUTION OF THE WORK

8.1 The **Contractor** shall commence the **Work** on the date specified in the **Notice to Proceed** or the **Order to Work**. The time for performance of the **Work** under the **Contract** shall be computed from

the date specified in the **Notice to Proceed** or the **Order to Work. TIME BEING OF THE ESSENCE** to the **City**, the **Contractor** shall thereafter prosecute the **Work** diligently, using such **Means and Methods of Construction** as are in accord with Article 4 herein and as will assure its completion not later than the date specified in this Contract, or on the date to which the time for completion may be extended.

ARTICLE 9. PROGRESS SCHEDULES

9.1 To enable the **Work** to be performed in an orderly and expeditious manner, the **Contractor**, within fifteen (15) **Days** after the **Notice to Proceed** or **Order to Work**, unless otherwise directed by the **Engineer**, shall submit to the **Engineer** a proposed progress schedule based on the Critical Path Method in the form of a bar graph or in such other form as specified by the **Engineer**, and monthly cash flow requirements, showing:

9.1.1 The anticipated time of commencement and completion of each of the various operations to be performed under this **Contract**; and

9.1.2 The sequence and interrelation of each of these operations with the others and with those of other related contracts; and

9.1.3 The estimated time required for fabrication or delivery, or both, of all materials and equipment required for the **Work**, including the anticipated time for obtaining required approvals pursuant to Article 10; and

9.1.4 The estimated amount in dollars the **Contractor** will claim on a monthly basis.

9.2 The proposed schedule shall be revised as directed by the **Engineer**, until finally approved by the **Engineer**, and after such approval, subject to the provisions of Article 11, shall be strictly adhered to by the **Contractor**.

9.3 If the **Contractor** shall fail to adhere to the approved progress schedule, or to the schedule as revised pursuant to Article 11, it shall promptly adopt such other or additional **Means and Methods of Construction**, at its sole cost and expense, as will make up for the time lost and will assure completion in accordance with the approved progress schedule. The approval by the **City** of a progress schedule which is shorter than the time allotted under the **Contract** shall not create any liability for the **City** if the approved progress schedule is not met.

9.4 The **Contractor** will not receive any payments until the proposed progress schedule is submitted.

ARTICLE 10. REQUESTS FOR INFORMATION OR APPROVAL

10.1 From time to time as the **Work** progresses and in the sequence indicated by the approved progress schedule, the **Contractor** shall submit to the **Engineer** a specific request in writing for each item of information or approval required by the **Contractor**. These requests shall state the latest date upon which the information or approval is actually required by the **Contractor**, and shall be submitted in a reasonable time in advance thereof to provide the **Engineer** a sufficient time to act upon such submissions, or any necessary re-submissions thereof.

10.2 The **Contractor** shall not have any right to an extension of time on account of delays due to the **Contractor's** failure to submit requests for the required information or the required approval in accordance with the above requirements.

ARTICLE 11. NOTICE OF CONDITIONS CAUSING DELAY AND DOCUMENTATION OF DAMAGES CAUSED BY DELAY

11.1 After the commencement of any condition which is causing or may cause a delay in completion of the **Work**, including conditions for which the **Contractor** may be entitled to an extension of time, the following notifications and submittals are required:

11.1.1 Within fifteen (15) **Days** after the **Contractor** becomes aware or reasonably should be aware of each such condition, the **Contractor** must notify the **Resident Engineer** or **Engineer**, as directed by the **Commissioner**, in writing of the existence, nature and effect of such condition upon the approved progress schedule and the **Work**, and must state why and in what respects, if any, the condition is causing or may cause a delay. Such notice shall include a description of the construction activities that are or could be affected by the condition and may include any recommendations the **Contractor** may have to address the delay condition and any activities the **Contractor** may take to avoid or minimize the delay.

11.1.2 If the **Contractor** shall claim to be sustaining damages for delay as provided for in this Article 11,within forty-five (45) **Days** from the time such damages are first incurred for each such condition, the **Contractor** shall submit to the **Commissioner** a verified written statement of the details and estimates of the amounts of such damages, including categories of expected damages and projected monthly costs, together with documentary evidence of such damages as the **Contractor** may have at the time of submission ("statement of delay damages"), as further detailed in Article 11.6. The **Contractor** may submit the above statement within such additional time as may be granted by the **Commissioner** in writing upon written request therefor.

11.1.3 Articles 11.1.1 and 11.1.2 do not relieve the **Contractor** of its obligation to comply with the provisions of Article 44.

11.2 Failure of the **Contractor** to strictly comply with the requirements of Article 11.1.1 may, in the discretion of the **Commissioner**, be deemed sufficient cause to deny any extension of time on account of delay arising out of such condition. Failure of the **Contractor** to strictly comply with the requirements of both Articles 11.1.1 and 11.1.2 shall be deemed a conclusive waiver by the **Contractor** of any and all claims for damages for delay arising from such condition and no right to recover on such claims shall exist.

11.3 When appropriate and directed by the **Engineer**, the progress schedule shall be revised by the **Contractor** until finally approved by the **Engineer**. The revised progress schedule must be strictly adhered to by the **Contractor**.

11.4 Compensable Delays

11.4.1 The **Contractor** agrees to make claim only for additional costs attributable to delay in the performance of this **Contract** necessarily extending the time for completion of the **Work** or resulting from acceleration directed by the **Commissioner** and required to maintain the progress schedule, occasioned solely by any act or omission to act of the **City** listed below. The **Contractor** also agrees that delay from any other cause shall be

compensated, if at all, solely by an extension of time to complete the performance of the **Work**.

11.4.1.1 The failure of the **City** to take reasonable measures to coordinate and progress the **Work** to the extent required by the **Contract**, except that the City shall not be responsible for the **Contractor's** obligation to coordinate and progress the **Work** of its **Subcontractors**.

11.4.1.2 Unreasonable delays attributable to the review of shop drawings, the issuance of change orders, or the cumulative impact of change orders that were not brought about by any act or omission of the **Contractor**.

11.4.1.3 The unavailability of the **Site** caused by acts or omissions of the **City**..

11.4.1.4 The issuance by the **Engineer** of a stop work order that was not brought about through any act or omission of the **Contractor**.

11.4.1.5 Differing site conditions or environmental hazards that were neither known nor reasonably ascertainable on a pre-bid inspection of the **Site** or review of the bid documents or other publicly available sources, and that are not ordinarily encountered in the **Project**'s geographical area or neighborhood or in the type of **Work** to be performed.

11.4.1.6 Delays caused by the **City's** bad faith or its willful, malicious, or grossly negligent conduct;

11.4.1.7 Delays not contemplated by the parties;

11.4.1.8 Delays so unreasonable that they constitute an intentional abandonment of the **Contract** by the **City**; and

11.4.1.9 Delays resulting from the **City's** breach of a fundamental obligation of the **Contract**.

11.4.2 No claim may be made for any alleged delay in **Substantial Completion** of the **Work** if the **Work** will be or is substantially completed by the date of **Substantial Completion** provided for in Schedule A unless acceleration has been directed by the **Commissioner** to meet the date of **Substantial Completion** set forth in Schedule A, or unless there is a provision in the **Contract** providing for additional compensation for early completion.

11.4.3 The provisions of this Article 11 apply only to claims for additional costs attributable to delay and do not preclude determinations by the **Commissioner** allowing reimbursements for additional costs for **Extra Work** pursuant to Articles 25 and 26 of this **Contract**. To the extent that any cost attributable to delay is reimbursed as part of a change order, no additional claim for compensation under this Article 11 shall be allowed.

11.5 Non-Compensable Delays. The **Contractor** agrees to make no claim for, and is deemed to have included in its bid prices for the various items of the **Contract**, the extra/additional costs attributable to any delays caused by or attributable to the items set forth below. For such items, the **Contractor** shall be compensated, if at all, solely by an extension of time to complete the performance of the **Work**, in accordance with the provisions of Article 13. Such extensions of time will be granted, if at all, pursuant to the grounds set forth in Article 13.3.

11.5.1 The acts or omissions of any third parties, including but not limited to **Other Contractors**, public/ governmental bodies (other than **City Agencies**), utilities or private enterprises, who are disclosed in the **Contract Documents** or are ordinarily encountered or generally recognized as related to the **Work**;

11.5.2 Any situation which was within the contemplation of the parties at the time of entering into the **Contract**, including any delay indicated or disclosed in the **Contract Documents** or that would be generally recognized by a reasonably prudent contractor as related to the nature of the **Work**, and/or the existence of any facility or appurtenance owned, operated or maintained by any third party, as indicated or disclosed in the **Contract Documents** or ordinarily encountered or generally recognized as related to the nature of the **Work**;

11.5.3 Restraining orders, injunctions or judgments issued by a court which were caused by a Contractor's submission, action or inaction or by a Contractor's **Means and Methods of Construction**, or by third parties, unless such order, injunction or judgment was the result of an act or omission by the **City**;

11.5.4 Any labor boycott, strike, picketing, lockout or similar situation;

11.5.5 Any shortages of supplies or materials, or unavailability of equipment, required by the **Contract Work**;

11.5.6 Climatic conditions, storms, floods, droughts, tidal waves, fires, hurricanes, earthquakes, landslides or other catastrophes or acts of God, or acts of war or of the public enemy or terrorist acts, including the **City's** reasonable responses thereto; and

11.5.7 **Extra Work** which does not significantly affect the overall completion of the **Contract**, reasonable delays in the review or issuance of change orders or field orders and/or in shop drawing reviews or approvals.

11.6 Required Content of Submission of Statement of Delay Damages

11.6.1 In the verified written statement of delay damages required by Article 11.1.2, the following information shall be provided by the **Contractor**:

11.6.1.1 For each delay, the start and end dates of the claimed periods of delay and, in addition, a description of the operations that were delayed, an explanation of how they were delayed, and the reasons for the delay, including identifying the applicable act or omission of the City listed in Article 11.4.

11.6.1.2 A detailed factual statement of the claim providing all necessary dates, locations and items of **Work** affected by the claim.

11.6.1.3 The estimated amount of additional compensation sought and a breakdown of that amount into categories as described in Article 11.7.

11.6.1.4 Any additional information requested by the **Commissioner**.

11.7 Recoverable Costs

11.7.1 Delay damages may be recoverable for the following costs actually and necessarily incurred in the performance of the **Work**:

11.7.1.1 Direct labor, including payroll taxes (subject to statutory wage caps) and supplemental benefits, based on time and materials records;

11.7.1.2 Necessary materials (including transportation to the **Site**), based on time and material records;

11.7.1.3 Reasonable rental value of necessary plant and equipment other than small tools, plus fuel/energy costs according to the applicable formula set forth in Articles 26.2.4 and/or 26.2.8, based on time and material records;

11.7.1.4 Additional insurance and bond costs;

11.7.1.5 Extended **Site** overhead, field office rental, salaries of field office staff, on-site project managers and superintendents, field office staff vehicles, **Project**-specific storage, field office utilities and telephone, and field office consumables;

11.7.1.6 Labor escalation costs based on actual costs;

11.7.1.7 Materials and equipment escalation costs based on applicable industry indices unless documentation of actual increased cost is provided;

11.7.1.8 Additional material and equipment storage costs based on actual documented costs and additional costs necessitated by extended manufacturer warranty periods; and

11.7.1.9 Extended home office overhead calculated based on the following formula:

(1) Subtract from the original **Contract** amount the amount earned by original contractual **Substantial Completion** date (not including change orders);

(2) Remove 15% overhead and profit from the calculation in item (1) by dividing the results of item (1) by 1.15;

(3) Multiply the result of item (2) by 7.25% for the total home office overhead;

(4) Multiply the result of item (3) by 7.25% for the total profit; and

(5) The total extended home office overhead will be the total of items (3) and (4).

11.7.2 Recoverable Subcontractor Costs. When the **Work** is performed by a **Subcontractor**, the **Contractor** may be paid the actual and necessary costs of such subcontracted **Work** as outlined above in Articles 11.7.1.1 through 11.7.1.8, and an additional overhead of 5% of the costs outlined in Articles 11.7.1.1 through 11.7.1.3.

11.7.3 Non-Recoverable Costs. The parties agree that the **City** will have no liability for the following items and the **Contractor** agrees it shall make no claim for the following items:

11.7.3.1 Profit, or loss of anticipated or unanticipated profit, except as provided in Article 11.7.1.9;

11.7.3.2 Consequential damages, including, but not limited to, construction or bridge loans or interest paid on such loans, loss of bonding capacity, bidding opportunities, or interest in investment, or any resulting insolvency;

11.7.3.3 Indirect costs or expenses of any nature except those included in Article 11.7.1;

11.7.3.4 Direct or indirect costs attributable to performance of **Work** where the **Contractor**, because of situations or conditions within its control, has not progressed the **Work** in a satisfactory manner; and

11.7.3.5 Attorneys' fees and dispute and claims preparation expenses.

11.8 Any claims for delay under this Article 11 are not subject to the jurisdiction of the Contract Dispute Resolution Board pursuant to the dispute resolution process set forth in Article 27.

11.9 Any compensation provided to the **Contractor** in accordance with this Article 11 will be made pursuant to a claim filed with the **Comptroller**. Nothing in this Article 11 extends the time for the **Contractor** to file an action with respect to a claim within six months after **Substantial Completion** pursuant to Article 56.

ARTICLE 12. COORDINATION WITH OTHER CONTRACTORS

12.1 During the progress of the **Work**, **Other Contractors** may be engaged in performing other work or may be awarded other contracts for additional work on this **Project**. In that event, the **Contractor** shall coordinate the **Work** to be done hereunder with the work of such **Other Contractors** and the **Contractor** shall fully cooperate with such **Other Contractors** and carefully fit its own **Work** to that provided under other contracts as may be directed by the **Engineer**. The **Contractor** shall not commit or permit any act which will interfere with the performance of work by any **Other Contractors**.

12.2 If the **Engineer** determines that the **Contractor** is failing to coordinate its **Work** with the work of **Other Contractors** as the **Engineer** has directed, then the **Commissioner** shall have the right to withhold any payments otherwise due hereunder until the **Contractor** completely complies with the **Engineer's** directions.

12.3 The **Contractor** shall notify the **Engineer** in writing if any **Other Contractor** on this **Project** is failing to coordinate its work with the **Work** of this **Contract**. If the **Engineer** finds such charges to be true, the **Engineer** shall promptly issue such directions to the **Other Contractor** with respect thereto as the situation may require. The **City** shall not, however, be liable for any damages suffered by any **Other Contractor's** failure to coordinate its work with the **Work** of this **Contract** or by reason of the **Other Contractor's** failure to promptly comply with the directions so issued by the **Engineer**, or by reason of any **Other Contractor's** default in performance, it being understood that the **City** does not guarantee the responsibility or continued efficiency of any contractor. The **Contractor** agrees to make no claim against the **City** for any damages relating to or arising out of any directions issued by the **Engineer** pursuant to this Article 12 (including but not limited to the failure of any **Other Contractor** to comply or promptly comply with such directions), or the failure of any **Other Contractor** to coordinate its work, or the default in performance of any **Other Contractor**.

12.4 The **Contractor** shall indemnify and hold the **City** harmless from any and all claims or judgments for damages and from costs and expenses to which the **City** may be subjected or which it may suffer or incur by reason of the **Contractor's** failure to comply with the **Engineer's** directions promptly; and the **Comptroller** shall have the right to exercise the powers reserved in Article 23 with respect to any claims which may be made for damages due to the **Contractor's** failure to comply with the **Engineer's** directions promptly. Insofar as the facts and **Law** relating to any claim would preclude the **City** from being completely indemnified by the **Contractor**, the **City** shall be partially indemnified by the **Contractor** to the fullest extent provided by **Law**.

12.5 Should the **Contractor** sustain any damage through any act or omission of any **Other Contractor** having a contract with the **City** for the performance of work upon the **Site** or of work which may be necessary to be performed for the proper prosecution of the **Work** to be performed hereunder, or through any act or omission of a subcontractor of such **Other Contractor**, the **Contractor** shall have no claim against the **City** for such damage, but shall have a right to recover such damage from the **Other**

Contractor under the provision similar to the following provisions which apply to this **Contract** and have been or will be inserted in the contracts with such **Other Contractors**:

12.5.1 Should any **Other Contractor** having or who shall hereafter have a contract with the **City** for the performance of work upon the **Site** sustain any damage through any act or omission of the **Contractor** hereunder or through any act or omission of any **Subcontractor** of the **Contractor**, the **Contractor** agrees to reimburse such **Other Contractor** for all such damages and to defend at its own expense any action based upon such claim and if any judgment or claim (even if the allegations of the action are without merit) against the **City** shall be allowed the **Contractor** shall pay or satisfy such judgment or claim and pay all costs and expenses in connection therewith and agrees to indemnify and hold the **City** harmless from all such claims. Insofar as the facts and **Law** relating to any claim would preclude the **City** from being completely indemnified by the **Contractor**, the **City** shall be partially indemnified by the **Contractor** to the fullest extent provided by **Law**.

12.6 The **City's** right to indemnification hereunder shall in no way be diminished, waived or discharged by its recourse to assessment of liquidated damages as provided in Article 15, or by the exercise of any other remedy provided for by **Contract** or by **Law**.

ARTICLE 13. EXTENSION OF TIME FOR PERFORMANCE

13.1 If performance by the **Contractor** is delayed for a reason set forth in Article 13.3, the **Contractor** may be allowed a reasonable extension of time in conformance with this Article 13 and the **PPB** Rules.

13.2 Any extension of time may be granted only by the **ACCO** or by the Board for the Extension of Time (hereafter "Board") (as set forth below) upon written application by the **Contractor**.

13.3 Grounds for Extension: If such application is made, the **Contractor** shall be entitled to an extension of time for delay in completion of the **Work** caused solely:

13.3.1 By the acts or omissions of the **City**, its officials, agents or employees; or

13.3.2 By the act or omissions of **Other Contractors** on this **Project**; or

13.3.3 By supervening conditions entirely beyond the control of either party hereto (such as, but not limited to, acts of God or the public enemy, excessive inclement weather, war or other national emergency making performance temporarily impossible or illegal, or strikes or labor disputes not brought about by any act or omission of the **Contractor**).

13.3.4 The **Contractor** shall, however, be entitled to an extension of time for such causes only for the number of **Days** of delay which the **ACCO** or the Board may determine to be due solely to such causes, and then only if the **Contractor** shall have strictly complied with all of the requirements of Articles 9 and 10.

13.4 The **Contractor** shall not be entitled to receive a separate extension of time for each of several causes of delay operating concurrently, but, if at all, only for the actual period of delay in completion of the **Work** as determined by the **ACCO** or the Board, irrespective of the number of causes contributing to produce such delay. If one of several causes of delay operating concurrently results from any act, fault or omission of the **Contractor** or of its **Subcontractors** or **Materialmen**, and would of itself (irrespective

of the concurrent causes) have delayed the **Work**, no extension of time will be allowed for the period of delay resulting from such act, fault or omission.

13.5 The determination made by the **ACCO** or the Board on an application for an extension of time shall be binding and conclusive on the **Contractor**.

13.6 The **ACCO** or the Board acting entirely within their discretion may grant an application for an extension of time for causes of delay other than those herein referred.

13.7 Permitting the **Contractor** to continue with the **Work** after the time fixed for its completion has expired, or after the time to which such completion may have been extended has expired, or the making of any payment to the **Contractor** after such time, shall in no way operate as a waiver on the part of the **City** of any of its rights under this **Contract**.

13.8 Application for Extension of Time:

13.8.1 Before the **Contractor's** time extension request will be considered, the **Contractor** shall notify the **ACCO** of the condition which allegedly has caused or is causing the delay, and shall submit a written application to the **ACCO** identifying:

13.8.1(a) The **Contractor**; the registration number; and **Project** description;

13.8.1(b) Liquidated damage assessment rate, as specified in the **Contract**;

13.8.1(c) Original total bid price;

13.8.1(d) The original **Contract** start date and completion date;

13.8.1(e) Any previous time extensions granted (number and duration); and

13.8.1(f) The extension of time requested.

13.8.2 In addition, the application for extension of time shall set forth in detail:

13.8.2(a) The nature of each alleged cause of delay in completing the **Work**;

13.8.2(b) The date upon which each such cause of delay began and ended and the number of **Days** attributable to each such cause;

13.8.2(c) A statement that the **Contractor** waives all claims except for those delineated in the application, and the particulars of any claims which the **Contractor** does not agree to waive. For time extensions for **Substantial Completion** and final completion payments, the application shall include a detailed statement of the dollar amounts of each element of claim item reserved; and

13.8.2(d) A statement indicating the **Contractor's** understanding that the time extension is granted only for purposes of permitting continuation of **Contract** performance and payment for **Work** performed and that the **City** retains its right to conduct an investigation and assess liquidated damages as appropriate in the future.

13.9 Analysis and Approval of Time Extensions:

13.9.1 For time extensions for partial payments, a written determination shall be made by the **ACCO** who may, for good and sufficient cause, extend the time for the performance of the **Contract** as follows:

13.9.1(a) If the **Work** is to be completed within six (6) months, the time for performance may be extended for sixty (60) **Days**;

13.9.1(b) If the **Work** is to be completed within less than one (1) year but more than six (6) months, an extension of ninety (90) **Days** may be granted;

13.9.1(c) If the **Contract** period exceeds one (1) year, besides the extension granted in Article 13.9.1(b), an additional thirty (30) **Days** may be granted for each multiple of six (6) months involved beyond the one (1) year period; or

13.9.1(d) If exceptional circumstances exist, the **ACCO** may extend the time for performance beyond the extensions in Articles 13.9.1(a), 13.9.1(b), and 13.9.1(c). In that event, the **ACCO** shall file with the Mayor's Office of Contract Services a written explanation of the exceptional circumstances.

13.9.2 For extensions of time for **Substantial Completion** and final completion payments, the **Engineer**, in consultation with the **ACCO**, shall prepare a written analysis of the delay (including a preliminary determination of the causes of delay, the beginning and end dates for each such cause of delay, and whether the delays are excusable under the terms of this **Contract**). The report shall be subject to review by and approval of the Board, which shall have authority to question its analysis and determinations and request additional facts or documentation. The report as reviewed and made final by the Board shall be made a part of the **Agency** contract file. Neither the report itself nor anything contained therein shall operate as a waiver or release of any claim the **City** may have against the **Contractor** for either actual or liquidated damages.

13.9.3 Approval Mechanism for Time Extensions for **Substantial Completion** or Final Completion Payments: An extension shall be granted only with the approval of the Board which is comprised of the **ACCO** of the **Agency**, the **City** Corporation Counsel, and the **Comptroller**, or their authorized representatives.

13.9.4 Neither the granting of any application for an extension of time to the **Contractor** or any **Other Contractor** on this **Project** nor the papers, records or reports related to any application for or grant of an extension of time or determination related thereto shall be referred to or offered in evidence by the **Contractor** or its attorneys in any action or proceeding.

13.10 No Damage for Delay: The **Contractor** agrees to make no claim for damages for delay in the performance of this **Contract** occasioned by any act or omission to act of the **City** or any of its representatives, except as provided for in Article 11.

ARTICLE 14. COMPLETION AND FINAL ACCEPTANCE OF THE WORK

14.1 Date for **Substantial Completion**: The **Contractor** shall substantially complete the **Work** within the time fixed in Schedule A of the General Conditions, or within the time to which such **Substantial Completion** may be extended.

14.2 Determining the Date of **Substantial Completion**: The **Work** will be deemed to be substantially complete when the two conditions set forth below have been met.

14.2.1 Inspection: The **Engineer** or **Resident Engineer**, as applicable, has inspected the **Work** and has made a written determination that it is substantially complete.

14.2.2 Approval of **Final Approved Punch List** and Date for **Final Acceptance**: Following inspection of the **Work**, the **Engineer/Resident Engineer** shall furnish the **Contractor** with a final punch list, specifying all items of **Work** to be completed and proposing dates for the completion of each specified item of **Work**. The **Contractor** shall then submit in writing to the **Engineer/Resident Engineer** within ten (10) **Days** of the **Engineer/Resident Engineer** furnishing the final punch list either acceptance of the dates or proposed alternative dates for the completion of each specified item of **Work**. If the **Contractor** neither accepts the dates nor proposes alternative dates within ten (10) **Days**, the schedule proposed by the **Engineer/Resident Engineer** shall be deemed accepted. If the **Contractor** proposes alternative dates, then, within a reasonable time after receipt, the **Engineer/Resident Engineer**, in a written notification to the **Contractor**, shall approve the **Contractor's** completion dates or, if they are unable to agree, the **Engineer/Resident Engineer** shall establish dates for the completion of each item of **Work**. The latest completion date specified shall be the date for **Final Acceptance** of the **Work**.

14.3 Date of **Substantial Completion**. The date of approval of the **Final Approved Punch List**, shall be the date of **Substantial Completion**. The date of approval of the **Final Approved Punch List** shall be either (a) if the **Contractor** approves the final punch list and proposed dates for completion furnished by the **Engineer/Resident Engineer**, the date of the **Contractor**'s approval; or (b) if the **Contractor** neither accepts the dates nor proposes alternative dates, ten (10) **Days** after the **Engineer/Resident Engineer** furnishes the **Contractor** with a final punch list and proposed dates for completion; or (c) if the **Contractor** proposes alternative dates, the date that the **Engineer/Resident Engineer** sends written notification to the **Contractor** either approving the **Contractor**'s proposed alternative dates or establishing dates for the completion for each item of **Work**.

14.4 Determining the Date of **Final Acceptance**: The **Work** will be accepted as final and complete as of the date of the **Engineer's/Resident Engineer**'s inspection if, upon such inspection, the **Engineer/Resident Engineer** finds that all items on the **Final Approved Punch List** are complete and no further **Work** remains to be done. The **Commissioner** will then issue a written determination of **Final Acceptance**.

14.5 Request for Inspection: Inspection of the **Work** by the **Engineer/Resident Engineer** for the purpose of **Substantial Completion** or **Final Acceptance** shall be made within fourteen (14) **Days** after receipt of the **Contractor's** written request therefor.

14.6 Request for Re-inspection: If upon inspection for the purpose of **Substantial Completion** or **Final Acceptance**, the **Engineer/Resident Engineer** determines that there are items of **Work** still to be performed, the **Contractor** shall promptly perform them and then request a re-inspection. If upon re-inspection, the **Engineer/Resident Engineer** determines that the **Work** is substantially complete or finally accepted, the date of such re-inspection shall be the date of **Substantial Completion** or **Final Acceptance**. Re-inspection by the **Engineer/Resident Engineer** shall be made within ten (10) **Days** after receipt of the **Contractor's** written request therefor.

14.7 Initiation of Inspection by the **Engineer/Resident Engineer**: If the **Contractor** does not request inspection or re-inspection of the **Work** for the purpose of **Substantial Completion** or **Final Acceptance**, the **Engineer/Resident Engineer** may initiate such inspection or re-inspection.

ARTICLE 15. LIQUIDATED DAMAGES

15.1 In the event the **Contractor** fails to substantially complete the **Work** within the time fixed for such **Substantial Completion** in Schedule A of the General Conditions, plus authorized time extensions, or if the **Contractor**, in the sole determination of the **Commissioner**, has abandoned the **Work**, the **Contractor** shall pay to the **City** the sum fixed in Schedule A of the General Conditions, for each and every **Day** that the time consumed in substantially completing the **Work** exceeds the time allowed therefor; which said sum, in view of the difficulty of accurately ascertaining the loss which the **City** will suffer by reason of delay in the **Substantial Completion** of the **Work** hereunder, is hereby fixed and agreed as the liquidated damages that the **City** will suffer by reason of such delay, and not as a penalty. This Article 15 shall also apply to the **Contractor** whether or not the **Contractor** is defaulted pursuant to Chapter X of this **Contract**. Neither the failure to assess liquidated damages nor the granting of any time extension shall operate as a waiver or release of any claim the **City** may have against the **Contractor** for either actual or liquidated damages.

15.2 Liquidated damages received hereunder are not intended to be nor shall they be treated as either a partial or full waiver or discharge of the **City's** right to indemnification, or the **Contractor's** obligation to indemnify the **City**, or to any other remedy provided for in this **Contract** or by **Law**.

15.3 The **Commissioner** may deduct and retain out of the monies which may become due hereunder, the amount of any such liquidated damages; and in case the amount which may become due hereunder shall be less than the amount of liquidated damages suffered by the **City**, the **Contractor** shall be liable to pay the difference.

ARTICLE 16. OCCUPATION OR USE PRIOR TO COMPLETION

16.1 Unless otherwise provided for in the **Specifications**, the **Commissioner** may take over, use, occupy or operate any part of the **Work** at any time prior to **Final Acceptance**, upon written notification to the **Contractor**. The **Engineer** or **Resident Engineer**, as applicable, shall inspect the part of the **Work** to be taken over, used, occupied, or operated, and will furnish the **Contractor** with a written statement of the **Work**, if any, which remains to be performed on such part. The **Contractor** shall not object to, nor interfere with, the **Commissioner's** decision to exercise the rights granted by Article 16. In the event the **Commissioner** takes over, uses, occupies, or operates any part of the **Work:**

16.1.1 the **Engineer/Resident Engineer** shall issue a written determination of **Substantial Completion** with respect to such part of the **Work**;

16.1.2 the **Contractor** shall be relieved of its absolute obligation to protect such part of the unfinished **Work** in accordance with Article 7;

16.1.3 the **Contractor's** guarantee on such part of the **Work** shall begin on the date of such use by the **City**; and;

16.1.4 the **Contractor** shall be entitled to a return of so much of the amount retained in accordance with Article 21 as it relates to such part of the **Work**, except so much thereof as may be retained under Articles 24 and 44.

CHAPTER IV: SUBCONTRACTS AND ASSIGNMENTS

ARTICLE 17. SUBCONTRACTS

17.1 The **Contractor** shall not make subcontracts totaling an amount more than the percentage of the total **Contract** price fixed in Schedule A of the General Conditions, without prior written permission from the **Commissioner**. All subcontracts made by the **Contractor** shall be in writing. No **Work** may be performed by a **Subcontractor** prior to the **Contractor** entering into a written subcontract with the **Subcontractor** and complying with the provisions of this Article 17.

17.2 Before making any subcontracts, the **Contractor** shall submit a written statement to the **Commissioner** giving the name and address of the proposed **Subcontractor**; the portion of the **Work** and materials which it is to perform and furnish; the cost of the subcontract; the VENDEX questionnaire if required; the proposed subcontract if requested by the **Commissioner**; and any other information tending to prove that the proposed **Subcontractor** has the necessary facilities, skill, integrity, past experience, and financial resources to perform the **Work** in accordance with the terms and conditions of this **Contract**.

17.3 In addition to the requirements in Article 17.2, **Contractor** is required to list the **Subcontractor** in the web based Subcontractor Reporting System through the City's Payee Information Portal (PIP), available at www.nyc.gov/pip.[1] For each **Subcontractor** listed, **Contractor** is required to provide the following information: maximum contract value, description of **Subcontractor's** Work, start and end date of the subcontract and identification of the **Subcontractor**'s industry. Thereafter, **Contractor** will be required to report in the system the payments made to each **Subcontractor** within 30 days of making the payment. If any of the required information changes throughout the Term of the **Contract, Contractor** will be required to revise the information in the system.

Failure of the **Contractor** to list a **Subcontractor** and/or to report **Subcontractor** payments in a timely fashion may result in the **Commissioner** declaring the **Contractor** in default of the **Contract** and will subject **Contractor** to liquidated damages in the amount of $100 per day for each day that the **Contractor** fails to identify a **Subcontractor** along with the required information about the **Subcontractor** and/or fails to report payments to a **Subcontractor**, beyond the time frames set forth herein or in the notice from the **City**. Article 15 shall govern the issue of liquidated damages.

17.4 If an approved **Subcontractor** elects to subcontract any portion of its subcontract, the proposed sub-subcontract shall be submitted in the same manner as directed above.

17.5 The **Commissioner** will notify the **Contractor** in writing whether the proposed **Subcontractor** is approved. If the proposed **Subcontractor** is not approved, the **Contractor** may submit another proposed **Subcontractor** unless the **Contractor** decides to do the **Work**. No **Subcontractor** shall be permitted to enter or perform any work on the **Site** unless approved.

17.6 Before entering into any subcontract hereunder, the **Contractor** shall provide the proposed **Subcontractor** with a complete copy of this document and inform the proposed **Subcontractor** fully and completely of all provisions and requirements of this **Contract** relating either directly or indirectly to the **Work** to be performed and the materials to be furnished under such subcontract, and every such

[1] In order to use the new system, a PIP account will be required. Detailed instructions on creating a PIP account and using the new system are also available at www.nyc.gov/pip. Additional assistance with PIP may be obtained by emailing the Financial Information Services Agency Help Desk at pip@fisa.nyc.gov.

Subcontractor shall expressly stipulate that all labor performed and materials furnished by the **Subcontractor** shall strictly comply with the requirements of this **Contract**.

17.7 Documents given to a prospective **Subcontractor** for the purpose of soliciting the **Subcontractor's** bid shall include either a copy of the bid cover or a separate information sheet setting forth the **Project** name, the **Contract** number (if available), the **Agency** (as noted in Article 2.1.6), and the **Project's** location.

17.8 The **Commissioner's** approval of a **Subcontractor** shall not relieve the **Contractor** of any of its responsibilities, duties, and liabilities hereunder. The **Contractor** shall be solely responsible to the **City** for the acts or defaults of its **Subcontractor** and of such **Subcontractor's** officers, agents, and employees, each of whom shall, for this purpose, be deemed to be the agent or employee of the **Contractor** to the extent of its subcontract.

17.9 If the **Subcontractor** fails to maintain the necessary facilities, skill, integrity, past experience, and financial resources (other than due to the **Contractor's** failure to make payments where required) to perform the **Work** in accordance with the terms and conditions of this **Contract**, the **Contractor** shall promptly notify the **Commissioner** and replace such **Subcontractor** with a newly approved **Subcontractor** in accordance with this Article 17.

17.10 The **Contractor** shall be responsible for ensuring that all **Subcontractors** performing **Work** at the **Site** maintain all insurance required by **Law**.

17.11 The **Contractor** shall promptly, upon request, file with the **Engineer** a conformed copy of the subcontract and its cost. The subcontract shall provide the following:

17.11.1 Payment to **Subcontractors**: The agreement between the **Contractor** and its **Subcontractor** shall contain the same terms and conditions as to method of payment for **Work**, labor, and materials, and as to retained percentages, as are contained in this **Contract**.

17.11.2 Prevailing Rate of Wages: The agreement between the **Contractor** and its **Subcontractor** shall include the prevailing wage rates and supplemental benefits to be paid in accordance with Labor Law Section 220.

17.11.3 Section 6-123 of the Administrative Code: Pursuant to the requirements of Section 6-123 of the Administrative Code, every agreement between the **Contractor** and a **Subcontractor** in excess of fifty thousand ($50,000) dollars shall include a provision that the **Subcontractor** shall not engage in any unlawful discriminatory practice as defined in Title VIII of the Administrative Code (Section 8-101 *et seq.*).

17.11.4 All requirements required pursuant to federal and/or state grant agreement(s), if applicable to the **Work**.

17.12 The **Commissioner** may deduct from the amounts certified under this **Contract** to be due to the **Contractor**, the sum or sums due and owing from the **Contractor** to the **Subcontractors** according to the terms of the said subcontracts, and in case of dispute between the **Contractor** and its **Subcontractor**, or **Subcontractors**, as to the amount due and owing, the **Commissioner** may deduct and withhold from the amounts certified under this **Contract** to be due to the **Contractor** such sum or sums as may be claimed by such **Subcontractor**, or **Subcontractors**, in a sworn affidavit, to be due and owing until such time as such claim or claims shall have been finally resolved.

17.13 On contracts where performance bonds and payment bonds are executed, the **Contractor** shall include on each requisition for payment the following data: **Subcontractor's** name, value of the subcontract, total amount previously paid to **Subcontractor** for **Work** previously requisitioned, and the amount, including retainage, to be paid to the **Subcontractor** for **Work** included in the requisition.

17.14 On **Contracts** where performance bonds and payment bonds are not executed, the **Contractor** shall include with each requisition for payment submitted hereunder, a signed statement from each and every **Subcontractor** and/or **Materialman** for whom payment is requested in such requisition. Such signed statement shall be on the letterhead of the **Subcontractor** and/or **Materialman** for whom payment is requested and shall (i) verify that such **Subcontractor** and/or **Materialman** has been paid in full for all **Work** performed and/or material supplied to date, exclusive of any amount retained and any amount included on the current requisition, and (ii) state the total amount of retainage to date, exclusive of any amount retained on the current requisition.

ARTICLE 18. ASSIGNMENTS

18.1 The **Contractor** shall not assign, transfer, convey or otherwise dispose of this **Contract**, or the right to execute it, or the right, title or interest in or to it or any part thereof, or assign, by power of attorney or otherwise any of the monies due or to become due under this **Contract**, unless the previous written consent of the **Commissioner** shall first be obtained thereto, and the giving of any such consent to a particular assignment shall not dispense with the necessity of such consent to any further or other assignments.

18.2 Such assignment, transfer, conveyance or other disposition of this **Contract** shall not be valid until filed in the office of the **Commissioner** and the **Comptroller**, with the written consent of the **Commissioner** endorsed thereon or attached thereto.

18.3 Failure to obtain the previous written consent of the **Commissioner** to such an assignment, transfer, conveyance or other disposition, may result in the revocation and annulment of this **Contract**. The **City** shall thereupon be relieved and discharged from any further liability to the **Contractor**, its assignees, transferees or sublessees, who shall forfeit and lose all monies therefor earned under the **Contract**, except so much as may be required to pay the **Contractor's** employees.

18.4 The provisions of this clause shall not hinder, prevent, or affect an assignment by the **Contractor** for the benefit of its creditors made pursuant to the **Laws** of the State of New York.

18.5 This **Contract** may be assigned by the **City** to any corporation, agency or instrumentality having authority to accept such assignment.

CHAPTER V: CONTRACTOR'S SECURITY AND GUARANTEE

ARTICLE 19. SECURITY DEPOSIT

19.1 If performance and payment bonds are required, the **City** shall retain the bid security to ensure that the successful bidder executes the **Contract** and furnishes the required payment and performance security within ten (10) **Days** after notice of the award of the **Contract**. If the successful bidder fails to execute the **Contract** and furnish the required payment and performance security, the **City** shall retain such bid security as set forth in the Information for Bidders. If the successful bidder executes the

Contract and furnishes the required payment and performance security, the **City** shall return the bid security within a reasonable time after the furnishing of such bonds and execution of the **Contract** by the **City**.

19.2 If performance and payment bonds are not required, the bid security shall be retained by the **City** as security for the **Contractor**'s faithful performance of the **Contract**. If partial payments are provided, the bid security will be returned to the **Contractor** after the sum retained under Article 21 equals the amount of the bid security, subject to other provisions of this **Contract**. If partial payments are not provided, the bid security will be released when final payment is certified by the **City** for payment.

19.3 If the **Contractor** is declared in default under Article 48 prior to the return of the deposit, or if any claim is made such as referred to in Article 23, the amount of such deposit, or so much thereof as the **Comptroller** may deem necessary, may be retained and then applied by the **Comptroller**:

19.3.1 To compensate the **City** for any expense, loss or damage suffered or incurred by reason of or resulting from such default, including the cost of re-letting and liquidated damages; or

19.3.2 To indemnify the **City** against any and all claims.

ARTICLE 20. PAYMENT GUARANTEE

20.1 On **Contracts** where one hundred (100%) percent performance bonds and payment bonds are executed, this Article 20 does not apply.

20.2 In the event the terms of this **Contract** do not require the **Contractor** to provide a payment bond or where the **Contract** does not require a payment bond for one hundred (100%) percent of the **Contract** price, the **City** shall, in accordance with the terms of this Article 20, guarantee payment of all lawful claims for:

20.2.1 Wages and compensation for labor performed and/or services rendered; and

20.2.2 Materials, equipment, and supplies provided, whether incorporated into the **Work** or not, when demands have been filed with the **City** as provided hereinafter by any person, firm, or corporation which furnished labor, material, equipment, supplies, or any combination thereof, in connection with the **Work** performed hereunder (hereinafter referred to as the "beneficiary") at the direction of the **City** or the **Contractor**.

20.3 The provisions of Article 20.2 are subject to the following limitations and conditions:

20.3.1 If the **Contractor** provides a payment bond for a value that is less than one hundred (100%) percent of the value of the **Contract Work**, the payment bond provided by the **Contractor** shall be primary (and non-contributing) to the payment guarantee provided under this Article 20.

20.3.2 The guarantee is made for the benefit of all beneficiaries as defined in Article 20.2 provided that those beneficiaries strictly adhere to the terms and conditions of Article 20.3.4 and 20.3.5.

20.3.3 Nothing in this Article 20 shall prevent a beneficiary providing labor, services or material for the **Work** from suing the **Contractor** for any amounts due and owing the beneficiary by the **Contractor**.

20.3.4 Every person who has furnished labor or material, to the **Contractor** or to a **Subcontractor** of the **Contractor**, in the prosecution of the **Work** and who has not been paid in full therefor before the expiration of a period of ninety (90) **Days** after the date on which the last of the labor was performed or material was furnished by him/her for which the claim is made, shall have the right to sue on this payment guarantee in his/her own name for the amount, or the balance thereof, unpaid at the time of commencement of the action; provided, however, that a person having a direct contractual relationship with a **Subcontractor** of the **Contractor** but no contractual relationship express or implied with the **Contractor** shall not have a right of action upon the guarantee unless he/she shall have given written notice to the **Contractor** within one hundred twenty (120) **Days** from the date on which the last of the labor was performed or the last of the material was furnished, for which his/her claim is made, stating with substantial accuracy the amount claimed and the name of the party to whom the material was furnished or for whom the labor was performed. The notice shall be served by delivering the same personally to the **Contractor** or by mailing the same by registered mail, postage prepaid, in an envelope addressed to the **Contractor** at any place where it maintains an office or conducts its business; provided, however, that where such notice is actually received by the **Contractor** by other means, such notice shall be deemed sufficient.

20.3.5 Except as provided in Labor Law Section 220-g, no action on this payment guarantee shall be commenced after the expiration of the one-year limitations period set forth in Section 137(4)(b) of the State Finance Law.

20.3.6 The **Contractor** shall promptly forward to the **City** any notice or demand received pursuant to Article 20.3.4. The **Contractor** shall inform the **City** of any defenses to the notice or demand and shall forward to the **City** any documents the **City** requests concerning the notice or demand.

20.3.7 All demands made against the **City** by a beneficiary of this payment guarantee shall be presented to the **Engineer** along with all written documentation concerning the demand which the **Engineer** deems reasonably appropriate or necessary, which may include, but shall not be limited to: the subcontract; any invoices presented to the **Contractor** for payment; the notarized statement of the beneficiary that the demand is due and payable, that a request for payment has been made of the **Contractor** and that the demand has not been paid by the **Contractor** within the time allowed for such payment by the subcontract; and copies of any correspondence between the beneficiary and the **Contractor** concerning such demand. The **City** shall notify the **Contractor** that a demand has been made. The **Contractor** shall inform the **City** of any defenses to the demand and shall forward to the **City** any documents the **City** requests concerning the demand.

20.3.8 The **City** shall make payment only if, after considering all defenses presented by the **Contractor**, it determines that the payment is due and owing to the beneficiary making the demand.

20.3.9 No beneficiary shall be entitled to interest from the **City**, or to any other costs, including, but not limited to, attorneys' fees, except to the extent required by State Finance Law Section 137.

20.4 Upon the receipt by the **City** of a demand pursuant to this Article 20, the **City** may withhold from any payment otherwise due and owing to the **Contractor** under this **Contract** an amount sufficient to satisfy the demand.

20.4.1 In the event the **City** determines that the demand is valid, the **City** shall notify the **Contractor** of such determination and the amount thereof and direct the **Contractor** to immediately pay such amount to the beneficiary. In the event the **Contractor**, within seven (7) **Days** of receipt of such notification from the **City**, fails to pay the beneficiary, such failure shall constitute an automatic and irrevocable assignment of payment by the **Contractor** to the beneficiary for the amount of the demand determined by the **City** to be valid. The **Contractor**, without further notification or other process, hereby gives its unconditional consent to such assignment of payment to the beneficiary and authorizes the **City**, on its behalf, to take all necessary actions to implement such assignment of payment, including without limitation the execution of any instrument or documentation necessary to effectuate such assignment.

20.4.2In the event that the amount otherwise due and owing to the **Contractor** by the **City** is insufficient to satisfy such demand, the **City** may, at its option, require payment from the **Contractor** of an amount sufficient to cover such demand and exercise any other right to require or recover payment which the **City** may have under **Law** or **Contract**.

20.4.3 In the event the **City** determines that the demand is invalid, any amount withheld pending the **City**'s review of such demand shall be paid to the **Contractor**; provided, however, no lien has been filed. In the event a claim or an action has been filed, the terms and conditions set forth in Article 23 shall apply. In the event a lien has been filed, the parties will be governed by the provisions of the Lien Law of the State of New York.

20.5 The provisions of this Article 20 shall not prevent the **City** and the **Contractor** from resolving disputes in accordance with the **PPB** Rules, where applicable.

20.6 In the event the **City** determines that the beneficiary is entitled to payment pursuant to this Article 20, such determination and any defenses and counterclaims raised by the **Contractor** shall be taken into account in evaluating the **Contractor's** performance.

20.7 Nothing in this Article 20 shall relieve the **Contractor** of the obligation to pay the claims of all persons with valid and lawful claims against the **Contractor** relating to the **Work**.

20.8 The **Contractor** shall not require any performance, payment or other bonds of any **Subcontractor** if this **Contract** does not require such bonds of the **Contractor**.

20.9 The payment guarantee made pursuant to this Article 20 shall be construed in a manner consistent with Section 137 of the State Finance Law and shall afford to persons furnishing labor or materials to the **Contractor** or its **Subcontractors** in the prosecution of the **Work** under this **Contract** all of the rights and remedies afforded to such persons by such section, including but not limited to, the right to commence an action against the **City** on the payment guarantee provided by this Article 20 within the one-year limitations period set forth in Section 137(4)(b).

ARTICLE 21. RETAINED PERCENTAGE

21.1 If this **Contract** requires one hundred (100%) percent performance and payment security, then as further security for the faithful performance of this **Contract**, the **Commissioner** shall deduct, and

retain until the substantial completion of the **Work**, five (5%) percent of the value of **Work** certified for payment in each partial payment voucher.

21.2 If this **Contract** does not require one hundred (100%) percent performance and payment security and if the price for which this **Contract** was awarded does not exceed one million ($1,000,000) dollars, then as further security for the faithful performance of this **Contract**, the **Commissioner** shall deduct, and retain until the substantial completion of the **Work**, five (5%) percent of the value of **Work** certified for payment in each partial payment voucher.

21.3 If this **Contract** does not require one hundred (100%) percent performance and payment security and if the price for which this **Contract** was awarded exceeds one million ($1,000,000) dollars, then as further security for the faithful performance of this **Contract,** the **Commissioner** shall deduct, and retain until the substantial completion of the **Work**, up to ten (10%) percent of the value of **Work** certified for payment in each partial payment voucher. The percentage to be retained is set forth in Schedule A of the General Conditions.

ARTICLE 22. INSURANCE

22.1 Types of Insurance: The **Contractor** shall procure and maintain the following types of insurance if, and as indicated, in Schedule A of the General Conditions (with the minimum limits and special conditions specified in Schedule A). Such insurance shall be maintained from the date the **Contractor** is required to provide Proof of Insurance pursuant to Article 22.3.1 through the date of completion of all required **Work** (including punch list work as certified in writing by the **Resident Engineer**), except for insurance required pursuant to Article 22.1.4, which may terminate upon **Substantial Completion** of the **Contract**. All insurance shall meet the requirements set forth in this Article 22. Wherever this Article requires that insurance coverage be "at least as broad" as a specified form (including all ISO forms), there is no obligation that the form itself be used, provided that the **Contractor** can demonstrate that the alternative form or endorsement contained in its policy provides coverage at least as broad as the specified form.

22.1.1 Commercial General Liability Insurance: The **Contractor** shall provide Commercial General Liability Insurance covering claims for property damage and/or bodily injury, including death, which may arise from any of the operations under this **Contract**. Coverage under this insurance shall be at least as broad as that provided by the latest edition of Insurance Services Office ("ISO") Form CG 0001. Such insurance shall be "occurrence" based rather than "claims-made" and include, without limitation, the following types of coverage: premises operations; products and completed operations; contractual liability (including the tort liability of another assumed in a contract); broad form property damage; independent contractors; explosion, collapse and underground (XCU); construction means and methods; and incidental malpractice. Such insurance shall contain a "per project" aggregate limit, as specified in Schedule A, that applies separately to operations under this **Contract**.

22.1.1(a) Such Commercial General Liability Insurance shall name the **City** as an Additional Insured. Coverage for the City shall specifically include the **City's** officials and employees, be at least as broad as the latest edition of ISO Form CG 20 10 and provide completed operations coverage at least as broad as the latest edition of ISO Form CG 20 37.

22.1.1(b) Such Commercial General Liability Insurance shall name all other entities designated as additional insureds in Schedule A but only for claims arising from the

Contractor's operations under this **Contract**, with coverage at least as broad as the latest edition of ISO Form CG 20 26.

22.1.1(c) If the **Work** requires a permit from the Department of Buildings pursuant to 1 RCNY Section 101-08, the **Contractor** shall provide Commercial General Liability Insurance with limits of at least those required by 1 RCNY section 101-08 or greater limits required by the Agency in accordance with Schedule A. If the **Work** does not require such a permit, the minimum limits shall be those provided for in Schedule A.

22.1.1(d) If any of the **Work** includes repair of a waterborne vessel owned by or to be delivered to the **City**, such Commercial General Liability shall include, or be endorsed to include, Ship Repairer's Legal Liability Coverage to protect against, without limitation, liability arising from navigation of such vessels prior to delivery to and acceptance by the **City**.

22.1.2 Workers' Compensation Insurance, Employers' Liability Insurance, and Disability Benefits Insurance: The **Contractor** shall provide, and shall cause its **Subcontractors** to provide, Workers Compensation Insurance, Employers' Liability Insurance, and Disability Benefits Insurance in accordance with the **Laws** of the State of New York on behalf of all employees providing services under this **Contract** (except for those employees, if any, for which the **Laws** require insurance only pursuant to Article 22.1.3).

22.1.3 United States Longshoremen's and Harbor Workers Act and/or Jones Act Insurance: If specified in Schedule A of the General Conditions or if required by **Law**, the **Contractor** shall provide insurance in accordance with the United States Longshoremen's and Harbor Workers Act and/or the Jones Act, on behalf of all qualifying employees providing services under this **Contract**.

22.1.4 Builders Risk Insurance: If specified in Schedule A of the General Conditions, the **Contractor** shall provide Builders Risk Insurance on a completed value form for the total value of the **Work** through **Substantial Completion** of the **Work** in its entirety. Such insurance shall be provided on an All Risk basis and include coverage, without limitation, for windstorm (including named windstorm), storm surge, flood and earth movement. Unless waived by the **Commissioner**, it shall include coverage for ordinance and law, demolition and increased costs of construction, debris removal, pollutant clean up and removal, and expediting costs. Such insurance shall cover, without limitation, (a) all buildings and/or structures involved in the **Work**, as well as temporary structures at the **Site**, and (b) any property that is intended to become a permanent part of such building or structure, whether such property is on the **Site**, in transit or in temporary storage. Policies shall name the **Contractor** as Named Insured and list the **City** as both an Additional Insured and a Loss Payee as its interest may appear.

22.1.4(a) Policies of such insurance shall specify that, in the event a loss occurs at an occupied facility, occupancy of such facility is permitted without the consent of the issuing insurance company.

22.1.4(b) Such insurance may be provided through an Installation Floater, at the **Contractor's** option, if it otherwise conforms with the requirements of this Article 22.1.4.

22.1.5 Commercial Automobile Liability Insurance: The **Contractor** shall provide Commercial Automobile Liability Insurance for liability arising out of ownership,

maintenance or use of any owned (if any), non-owned and hired vehicles to be used in connection with this **Contract**. Coverage shall be at least as broad as the latest edition of ISO Form CA0001. If vehicles are used for transporting hazardous materials, the Automobile Liability Insurance shall be endorsed to provide pollution liability broadened coverage for covered vehicles (endorsement CA 99 48) as well as proof of MCS 90.

22.1.6 Contractors Pollution Liability Insurance: If specified in Schedule A of the General Conditions, the **Contractor** shall maintain, or cause the **Subcontractor** doing such **Work** to maintain, Contractors Pollution Liability Insurance covering bodily injury and property damage. Such insurance shall provide coverage for actual, alleged or threatened emission, discharge, dispersal, seepage, release or escape of pollutants (including asbestos), including any loss, cost or expense incurred as a result of any cleanup of pollutants (including asbestos) or in the investigation, settlement or defense of any claim, action, or proceedings arising from the operations under this **Contract**. Such insurance shall be in the **Contractor's** name and list the **City** as an Additional Insured and any other entity specified in Schedule A. Coverage shall include, without limitation, (a) loss of use of damaged property or of property that has not been physically injured, (b) transportation, and (c) non-owned disposal sites.

22.1.6(a) Coverage for the **City** as Additional Insured shall specifically include the **City's** officials and employees and be at least as broad as provided to the **Contractor** for this **Project**.

22.1.6(b) If such insurance is written on a claims-made policy, such policy shall have a retroactive date on or before the effective date of this **Contract**, and continuous coverage shall be maintained, or an extended discovery period exercised, for a period of not less than three (3) years from the time the **Work** under this **Contract** is completed.

22.1.7 Marine Insurance:

22.1.7(a) Marine Protection and Indemnity Insurance: If specified in Schedule A of the General Conditions or if the **Contractor** engages in marine operations in the execution of any part of the **Work**, the **Contractor** shall maintain, or cause the **Subcontractor** doing such Work to maintain, Marine Protection and Indemnity Insurance with coverage at least as broad as Form SP-23. The insurance shall provide coverage for the **Contractor** or **Subcontractor** (whichever is doing this **Work**) and for the **City** (together with its officials and employees) and any other entity specified in Schedule A as an Additional Insured for bodily injury and property damage arising from marine operations under this **Contract**. Coverage shall include, without limitation, injury or death of crew members (if not fully provided through other insurance), removal of wreck, damage to piers, wharves and other fixed or floating objects and loss of or damage to any other vessel or craft, or to property on such other vessel or craft.

22.1.7(b) Hull and Machinery Insurance: If specified in Schedule A of the General Conditions or if the **Contractor** engages in marine operations in the execution of any part of the **Work**, the **Contractor** shall maintain, or cause the **Subcontractor** doing such **Work** to maintain, Hull and Machinery Insurance with coverage for the **Contractor** or **Subcontractor** (whichever is doing this Work) and for the **City** (together with its officials and employees) as Additional Insured at least as broad as the latest edition of American Institute Tug Form for all tugs used under this

Contract and Collision Liability at least as broad as the latest edition of American Institute Hull Clauses.

22.1.7(c) Marine Pollution Liability Insurance: If specified in Schedule A of the General Conditions or if the **Contractor** engages in marine operations in the execution of any part of the **Work**, the **Contractor** shall maintain, or cause the **Subcontractor** doing such Work to maintain, Marine Pollution Liability Insurance covering itself (or the Subcontractor doing such Work) as Named Insured and the **City** (together with its officials and employees) and any other entity specified in Schedule A as an Additional Insured. Coverage shall be at least as broad as that provided by the latest edition of Water Quality Insurance Syndicate Form and include, without limitation, liability arising from the discharge or substantial threat of a discharge of oil, or from the release or threatened release of a hazardous substance including injury to, or economic losses resulting from, the destruction of or damage to real property, personal property or natural resources.

22.1.8 The **Contractor** shall provide such other types of insurance, at such minimum limits and with such conditions, as are specified in Schedule A of the General Conditions.

22.2 General Requirements for Insurance Coverage and Policies:

22.2.1 All required insurance policies shall be maintained with companies that may lawfully issue the required policy and have an A.M. Best rating of at least A-/VII or a Standard and Poor's rating of at least A, unless prior written approval is obtained from the **City** Corporation Counsel.

22.2.2 The **Contractor** shall be solely responsible for the payment of all premiums for all required policies and all deductibles and self-insured retentions to which such policies are subject, whether or not the **City** is an insured under the policy.

22.2.3 In his/her sole discretion, the **Commissioner** may, subject to the approval of the **Comptroller** and the **City** Corporation Counsel, accept Letters of Credit and/or custodial accounts in lieu of required insurance.

22.2.4 The **City's** limits of coverage for all types of insurance required pursuant to Schedule A of the General Conditions shall be the greater of (i) the minimum limits set forth in Schedule A or (ii) the limits provided to the **Contractor** as Named Insured under all primary, excess, and umbrella policies of that type of coverage.

22.2.5 The **Contractor** may satisfy its insurance obligations under this Article 22 through primary policies or a combination of primary and excess/umbrella policies, so long as all policies provide the scope of coverage required herein.

22.2.6 Policies of insurance provided pursuant to this Article 22 shall be primary and non-contributing to any insurance or self-insurance maintained by the **City**.

22.3 Proof of Insurance:

22.3.1 For all types of insurance required by Article 22.1 and Schedule A, except for insurance required by Articles 22.1.4 and 22.1.7, the **Contractor** shall file proof of insurance in accordance with this Article 22.3 within ten (10) **Days** of award. For insurance

provided pursuant to Articles 22.1.4 and 22.1.7, proof shall be filed by a date specified by the **Commissioner** or ten (10) **Days** prior to the commencement of the portion of the **Work** covered by such policy, whichever is earlier.

22.3.2 For Workers' Compensation Insurance provided pursuant to Article 22.1.2, the **Contractor** shall submit one of the following forms: C-105.2 Certificate of Workers' Compensation Insurance; U-26.3 - State Insurance Fund Certificate of Workers' Compensation Insurance; Request for WC/DB Exemption (Form CE-200); equivalent or successor forms used by the New York State Workers' Compensation Board; or other proof of insurance in a form acceptable to the **Commissioner**. For Disability Benefits Insurance provided pursuant to Article 22.1.2, the Contractor shall submit DB-120.1 - Certificate Of Insurance Coverage Under The NYS Disability Benefits Law, Request for WC/DB Exemption (Form CE-200); equivalent or successor forms used by the New York State Workers' Compensation Board; or other proof of insurance in a form acceptable to the **Commissioner**. ACORD forms are not acceptable.

22.3.3 For policies provided pursuant to all of Article 22.1 other than Article 22.1.2, the **Contractor** shall submit one or more Certificates of Insurance on forms acceptable to the **Commissioner**. All such Certificates of Insurance shall certify (a) the issuance and effectiveness of such policies of insurance, each with the specified minimum limits (b) for insurance secured pursuant to Article 22.1.1 that the **City** and any other entity specified in Schedule A is an Additional Insured thereunder; (c) in the event insurance is required pursuant to Article 22.1.6 and/or Article 22.1.7, that the City is an Additional Insured thereunder; (d) the company code issued to the insurance company by the National Association of Insurance Commissioners (the NAIC number); and (e) the number assigned to the **Contract** by the **City**. All such Certificates of Insurance shall be accompanied by either a duly executed "Certification by Insurance Broker or Agent" in the form contained in Part III of Schedule A or copies of all policies referenced in such Certificate of Insurance as certified by an authorized representative of the issuing insurance carrier. If any policy is not available at the time of submission, certified binders may be submitted until such time as the policy is available, at which time a certified copy of the policy shall be submitted.

22.3.4 Documentation confirming renewals of insurance shall be submitted to the **Commissioner** prior to the expiration date of coverage of policies required under this **Contract**. Such proofs of insurance shall comply with the requirements of Articles 22.3.2 and 22.3.3.

22.3.5 The **Contractor** shall be obligated to provide the **City** with a copy of any policy of insurance provided pursuant to this Article 22 upon the demand for such policy by the **Commissioner** or the **City** Corporation Counsel.

22.4 Operations of the **Contractor**:

22.4.1 The **Contractor** shall not commence the **Work** unless and until all required certificates have been submitted to and accepted by the **Commissioner**. Acceptance by the **Commissioner** of a certificate does not excuse the **Contractor** from securing insurance consistent with all provisions of this Article 22 or of any liability arising from its failure to do so.

22.4.2 The **Contractor** shall be responsible for providing continuous insurance coverage in the manner, form, and limits required by this **Contract** and shall be authorized to perform **Work** only during the effective period of all required coverage.

22.4.3 In the event that any of the required insurance policies lapse, are revoked, suspended or otherwise terminated, for whatever cause, the **Contractor** shall immediately stop all **Work**, and shall not recommence **Work** until authorized in writing to do so by the **Commissioner**. Upon quitting the **Site**, except as otherwise directed by the **Commissioner**, the **Contractor** shall leave all plant, materials, equipment, tools, and supplies on the **Site**. **Contract** time shall continue to run during such periods and no extensions of time will be granted. The **Commissioner** may also declare the **Contractor** in default for failure to maintain required insurance.

22.4.4 In the event the **Contractor** receives notice, from an insurance company or other person, that any insurance policy required under this Article 22 shall be cancelled or terminated (or has been cancelled or terminated) for any reason, the **Contractor** shall immediately forward a copy of such notice to both the **Commissioner** and the New York City Comptroller, attn: Office of Contract Administration, Municipal Building, One Centre Street, room 1005, New York, New York 10007. Notwithstanding the foregoing, the **Contractor** shall ensure that there is no interruption in any of the insurance coverage required under this Article 22.

22.4.5 Where notice of loss, damage, occurrence, accident, claim or suit is required under an insurance policy maintained in accordance with this Article 22, the **Contractor** shall notify in writing all insurance carriers that issued potentially responsive policies of any such event relating to any operations under this **Contract** (including notice to Commercial General Liability insurance carriers for events relating to the **Contractor**'s own employees) no later than 20 days after such event. For any policy where the **City** is an Additional Insured, such notice shall expressly specify that "this notice is being given on behalf of the City of New York as Insured as well as the Named Insured." Such notice shall also contain the following information: the number of the insurance policy, the name of the named insured, the date and location of the damage, occurrence, or accident, and the identity of the persons or things injured, damaged or lost. The **Contractor** shall simultaneously send a copy of such notice to the City of New York c/o Insurance Claims Specialist, Affirmative Litigation Division, New York City Law Department, 100 Church Street, New York, New York 10007.

22.4.6 In the event of any loss, accident, claim, action, or other event that does or can give rise to a claim under any insurance policy required under this Article 22, the **Contractor** shall at all times fully cooperate with the **City** with regard to such potential or actual claim.

22.5 **Subcontractor** Insurance: In the event the **Contractor** requires any **Subcontractor** to procure insurance with regard to any operations under this **Contract** and requires such **Subcontractor** to name the **Contractor** as an **Additional Insured** thereunder, the **Contractor** shall ensure that the **Subcontractor** name the **City**, including its officials and employees, as an Additional Insured with coverage at least as broad as the most recent edition of ISO Form CG 20 26.

22.6 Wherever reference is made in Article 7 or this Article 22 to documents to be sent to the **Commissioner** (e.g., notices, filings, or submissions), such documents shall be sent to the address set forth in Schedule A of the General Conditions. In the event no address is set forth in Schedule A, such documents are to be sent to the **Commissioner's** address as provided elsewhere in this **Contract**.

22.7 Apart from damages or losses covered by insurance provided pursuant to Articles 22.1.2, 22.1.3, or 22.1.5, the **Contractor** waives all rights against the **City**, including its officials and employees, for any damages or losses that are covered under any insurance required under this Article 22 (whether or

not such insurance is actually procured or claims are paid thereunder) or any other insurance applicable to the operations of the **Contractor** and/or its employees, agents, or **Subcontractors**.

22.8 In the event the **Contractor** utilizes a self-insurance program to satisfy any of the requirements of this Article 22, the **Contractor** shall ensure that any such self-insurance program provides the **City** with all rights that would be provided by traditional insurance under this Article 22, including but not limited to the defense and indemnification obligations that insurers are required to undertake in liability policies.

22.9 Materiality/Non-Waiver: The **Contractor's** failure to secure policies in complete conformity with this Article 22, or to give an insurance company timely notice of any sort required in this **Contract** or to do anything else required by this Article 22 shall constitute a material breach of this **Contract**. Such breach shall not be waived or otherwise excused by any action or inaction by the **City** at any time.

22.10 Pursuant to General Municipal Law Section 108, this **Contract** shall be void and of no effect unless **Contractor** maintains Workers' Compensation Insurance for the term of this **Contract** to the extent required and in compliance with the New York State Workers' Compensation Law.

22.11 Other Remedies: Insurance coverage provided pursuant to this Article 22 or otherwise shall not relieve the **Contractor** of any liability under this **Contract**, nor shall it preclude the **City** from exercising any rights or taking such other actions available to it under any other provisions of this **Contract** or **Law**.

ARTICLE 23. MONEY RETAINED AGAINST CLAIMS

23.1 If any claim shall be made by any person or entity (including **Other Contractors** with the **City** on this **Project**) against the **City** or against the **Contractor** and the **City** for any of the following:

(a) An alleged loss, damage, injury, theft or vandalism of any of the kinds referred to in Articles 7 and 12, plus the reasonable costs of defending the **City**, which in the opinion of the **Comptroller** may not be paid by an insurance company (for any reason whatsoever); or

(b) An infringement of copyrights, patents or use of patented articles, tools, etc., as referred to in Article 57; or

(c) Damage claimed to have been caused directly or indirectly by the failure of the **Contractor** to perform the **Work** in strict accordance with this **Contract,**

the amount of such claim, or so much thereof as the **Comptroller** may deem necessary, may be withheld by the **Comptroller**, as security against such claim, from any money due hereunder. The **Comptroller**, in his/her discretion, may permit the **Contractor** to substitute other satisfactory security in lieu of the monies so withheld.

23.2 If an action on such claim is timely commenced and the liability of the **City**, or the **Contractor**, or both, shall have been established therein by a final judgment of a court of competent jurisdiction, or if such claim shall have been admitted by the **Contractor** to be valid, the **Comptroller** shall pay such judgment or admitted claim out of the monies retained by the **Comptroller** under the provisions of this Article 23, and return the balance, if any, without interest, to the **Contractor**.

ARTICLE 24. MAINTENANCE AND GUARANTY

24.1 The **Contractor** shall promptly repair, replace, restore or rebuild, as the **Commissioner** may determine, any finished **Work** in which defects of materials or workmanship may appear or to which damage may occur because of such defects, during the one (1) year period subsequent to the date of **Substantial Completion** (or use and occupancy in accordance with Article 16), except where other periods of maintenance and guaranty are provided for in Schedule A.

24.2 As security for the faithful performance of its obligations hereunder, the **Contractor**, upon filing its requisition for payment on **Substantial Completion**, shall deposit with the **Commissioner** a sum equal to one (1%) percent of the price (or the amount fixed in Schedule A of the General Conditions) in cash or certified check upon a state or national bank and trust company or a check of such bank and trust company signed by a duly authorized officer thereof and drawn to the order of the **Comptroller**, or obligations of the **City**, which the **Comptroller** may approve as of equal value with the sum so required.

24.3 In lieu of the above, the **Contractor** may make such security payment to the **City** by authorizing the **Commissioner** in writing to deduct the amount from the **Substantial Completion** payment which shall be deemed the deposit required above.

24.4 If the **Contractor** has faithfully performed all of its obligations hereunder the **Commissioner** shall so certify to the **Comptroller** within five (5) **Days** after the expiration of one (1) year from the date of **Substantial Completion** and acceptance of the **Work** or within thirty (30) **Days** after the expiration of the guarantee period fixed in the **Specifications**. The security payment shall be repaid to the **Contractor** without interest within thirty (30) **Days** after certification by the **Commissioner** to the **Comptroller** that the **Contractor** has faithfully performed all of its obligations hereunder.

24.5 Notice by the **Commissioner** to the **Contractor** to repair, replace, rebuild or restore such defective or damaged **Work** shall be timely, pursuant to this article, if given not later than ten (10) **Days** subsequent to the expiration of the one (1) year period or other periods provided for herein.

24.6 If the **Contractor** shall fail to repair, replace, rebuild or restore such defective or damaged **Work** promptly after receiving such notice, the **Commissioner** shall have the right to have the **Work** done by others in the same manner as provided for in the completion of a defaulted **Contract**, under Article 51.

24.7 If the security payment so deposited is insufficient to cover the cost of such **Work**, the **Contractor** shall be liable to pay such deficiency on demand by the **Commissioner**.

24.8 The **Engineer's** certificate setting forth the fair and reasonable cost of repairing, replacing, rebuilding or restoring any damaged or defective **Work** when performed by one other than the **Contractor**, shall be binding and conclusive upon the **Contractor** as to the amount thereof.

24.9 The **Contractor** shall obtain all manufacturers' warranties and guaranties of all equipment and materials required by this **Contract** in the name of the **City** and shall deliver same to the **Commissioner**. All of the **City's** rights and title and interest in and to said manufacturers' warranties and guaranties may be assigned by the **City** to any subsequent purchasers of such equipment and materials or lessees of the premises into which the equipment and materials have been installed.

CHAPTER VI: CHANGES, EXTRA WORK, AND DOCUMENTATION OF CLAIM

ARTICLE 25. CHANGES

25.1 Changes may be made to this **Contract** only as duly authorized in writing by the **Commissioner** in accordance with the **Law** and this **Contract**. All such changes, modifications, and amendments will become a part of the **Contract**. **Work** so ordered shall be performed by the **Contractor**.

25.2 **Contract** changes will be made only for **Work** necessary to complete the **Work** included in the original scope of the **Contract** and/or for non-material changes to the scope of the **Contract**. Changes are not permitted for any material alteration in the scope of **Work** in the **Contract**.

25.3 The **Contractor** shall be entitled to a price adjustment for **Extra Work** performed pursuant to a written change order. Adjustments to price shall be computed in one or more of the following ways:

25.3.1 By applicable unit prices specified in the **Contract**; and/or

25.3.2 By agreement of a fixed price; and/or

25.3.3 By time and material records; and/or

25.3.4 In any other manner approved by the **CCPO**.

25.4 All payments for change orders are subject to pre-audit by the **Engineering Audit Officer** and may be post-audited by the **Comptroller** and/or the **Agency**.

ARTICLE 26. METHODS OF PAYMENT FOR OVERRUNS AND EXTRA WORK

26.1 Overrun of Unit Price Item: An overrun is any quantity of a unit price item which the **Contractor** is directed to provide which is in excess of one hundred twenty-five (125%) percent of the estimated quantity for that item set forth in the bid schedule.

26.1.1 For any unit price item, the **Contractor** will be paid at the unit price bid for any quantity up to one hundred twenty-five (125%) percent of the estimated quantity for that item set forth in the bid schedule. If during the progress of the **Work**, the actual quantity of any unit price item required to complete the **Work** approaches the estimated quantity for that item, and for any reason it appears that the actual quantity of any unit price item necessary to complete the **Work** will exceed the estimated quantity for that item by twenty-five (25%) percent, the **Contractor** shall immediately notify the **Engineer** of such anticipated overrun. The **Contractor** shall not be compensated for any quantity of a unit price item provided which is in excess of one hundred twenty-five (125%) percent of the estimated quantity for that item set forth in the bid schedule without written authorization from the **Engineer**.

26.1.2 If the actual quantity of any unit price item necessary to complete the **Work** will exceed one hundred twenty five (125%) percent of the estimated quantity for that item set forth in the bid schedule, the **City** reserves the right and the **Contractor** agrees to negotiate a new unit price for such item. In no event shall such negotiated new unit price exceed the unit bid price. If the **City** and **Contractor** cannot agree on a new unit price, then the **City** shall order the **Contractor** and the **Contractor** agrees to provide additional quantities of

the item on the basis of time and material records for the actual and reasonable cost as determined under Article 26.2, but in no event at a unit price exceeding the unit price bid.

26.2 **Extra Work:** For **Extra Work** where payment is by agreement on a fixed price in accordance with Article 25.3.2, the price to be paid for such **Extra Work** shall be based on the fair and reasonable estimated cost of the items set forth below. For **Extra Work** where payment is based on time and material records in accordance with Article 25.3.3, the price to be paid for such **Extra Work** shall be the actual and reasonable cost of the items set forth below, calculated in accordance with the formula specified therein, if any.

26.2.1 Necessary materials (including transportation to the **Site**); plus

26.2.2 Necessary direct labor, including payroll taxes (subject to statutory wage caps) and supplemental benefits; plus

26.2.3 Sales and personal property taxes, if any, required to be paid on materials not incorporated into such **Extra Work**; plus

26.2.4 Reasonable rental value of **Contractor**-owned (or **Subcontractor**-owned, as applicable), necessary plant and equipment other than **Small Tools**, plus fuel/energy costs. Except for fuel costs for pick-up trucks which shall be reimbursed based on a consumption of five (5) gallons per shift, fuel costs shall be reimbursed based on actual costs or, in the absence of auditable documentation, the following fuel consumption formula per operating hour: (.035) x (HP rating) x (Fuel cost/gallon). Reasonable rental value is defined as the lower of either seventy-five percent of the monthly prorated rental rates established in "The AED Green Book, Rental Rates and Specifications for Construction Equipment" published by Equipment Watch (the "Green Book"), or seventy-five percent of the monthly prorated rental rates established in the "Rental Rate Blue Book for Construction Equipment" published by Equipment Watch (the "Blue Book") (the applicable Blue Book rate being for rental only without the addition of any operational costs listed in the Blue Book). The reasonable rental value is deemed to be inclusive of all operating costs except for fuel/energy consumption and equipment operator's wages/costs. For multiple shift utilization, reimbursement shall be calculated as follows: first shift shall be seventy-five (75%) percent of such rental rates; second shift shall be sixty (60%) percent of the first shift rate; and third shift shall be forty (40%) percent of the first shift rate. Equipment on standby shall be reimbursed at one-third (1/3) the prorated monthly rental rate. **Contractor**-owned (or **Subcontractor**-owned, as applicable) equipment includes equipment from rental companies affiliated with or controlled by the **Contractor** (or **Subcontractor**, as applicable), as determined by the **Commissioner**. In establishing cost reimbursement for non-operating **Contractor**-owned (or **Subcontractor**-owned, as applicable) equipment (scaffolding, sheeting systems, road plates, etc.), the **City** may restrict reimbursement to a purchase-salvage/life cycle basis if less than the computed rental costs; plus

26.2.5 Necessary installation and dismantling of such plant and equipment, including transportation to and from the **Site**, if any, provided that, in the case of non-**Contractor**-owned (or non-**Subcontractor**-owned, as applicable) equipment rented from a third party, the cost of installation and dismantling are not allowable if such costs are included in the rental rate; plus

26.2.6 Necessary fees charged by governmental entities; plus

26.2.7 Necessary construction-related service fees charged by non-governmental entities, such as landfill tipping fees; plus

26.2.8 Reasonable rental costs of non-**Contractor**-owned (or non-**Subcontractor**-owned, as applicable) necessary plant and equipment other than **Small Tools**, plus fuel/energy costs. Except for fuel costs for pick-up trucks which shall be reimbursed based on a consumption of five (5) gallons per shift, fuel costs shall be reimbursed based on actual costs or, in the absence of auditable documentation, the following fuel consumption formula per hour of operation: (.035) x (HP rating) x (Fuel cost/gallon). In lieu of renting, the **City** reserves the right to direct the purchase of non-operating equipment (scaffolding, sheeting systems, road plates, etc.), with payment on a purchase-salvage/life cycle basis, if less than the projected rental costs; plus

26.2.9 Workers' Compensation Insurance, and any insurance coverage expressly required by the **City** for the performance of the **Extra Work** which is different than the types of insurance required by Article 22 and Schedule A of the General Conditions. The cost of Workers' Compensation Insurance is subject to applicable payroll limitation caps and shall be based upon the carrier's Manual Rate for such insurance derived from the applicable class Loss Cost ("LC") and carrier's Lost Cost Multiplier ("LCM") approved by the New York State Department of Financial Services, and with the exception of experience rating, rate modifiers as promulgated by the New York Compensation Insurance Rating Board ("NYCIRB"); plus

26.2.10 Additional costs incurred as a result of the **Extra Work** for performance and payment bonds; plus

26.2.11 Twelve percent (12%) percent of the total of items in Articles 26.2.1 through 26.2.5 as compensation for overhead, except that no percentage for overhead will be allowed on **Payroll Taxes** or on the premium portion of overtime pay or on sales and personal property taxes. Overhead shall include without limitation, all costs and expenses in connection with administration, management superintendence, small tools, and insurance required by Schedule A of the General Conditions other than Workers' Compensation Insurance; plus

26.2.12 Ten (10%) percent of the total of items in Articles 26.2.1 through 26.2.5, plus the items in Article 26.2.11, as compensation for profit, except that no percentage for profit will be allowed on **Payroll Taxes** or on the premium portion of overtime pay or on sales and personal property taxes; plus

26.2.13 Five (5%) percent of the total of items in Articles 26.2.6 through 26.2.10 as compensation for overhead and profit.

26.3 Where the **Extra Work** is performed in whole or in part by other than the **Contractor's** own forces pursuant to Article 26.2, the **Contractor** shall be paid, subject to pre-audit by the **Engineering Audit Officer**, the cost of such **Work** computed in accordance with Article 26.2 above, plus an additional allowance of five (5%) percent to cover the **Contractor's** overhead and profit.

26.4 Where a change is ordered, involving both **Extra Work** and omitted or reduced **Contract Work,** the **Contract** price shall be adjusted, subject to pre-audit by the **EAO**, in an amount based on the difference between the cost of such **Extra Work** and of the omitted or reduced **Work**.

26.5 Where the **Contractor** and the **Commissioner** can agree upon a fixed price for **Extra Work** in accordance with Article 25.3.2 or another method of payment for **Extra Work** in accordance with

Article 25.3.4, or for **Extra Work** ordered in connection with omitted **Work**, such method, subject to pre-audit by the **EAO**, may, at the option of the **Commissioner**, be substituted for the cost plus a percentage method provided in Article 26.2; provided, however, that if the **Extra Work** is performed by a **Subcontractor**, the **Contractor** shall not be entitled to receive more than an additional allowance of five (5%) percent for overhead and profit over the cost of such **Subcontractor's Work** as computed in accordance with Article 26.2.

ARTICLE 27. RESOLUTION OF DISPUTES

27.1 All disputes between the **City** and the **Contractor** of the kind delineated in this Article 27.1 that arise under, or by virtue of, this **Contract** shall be finally resolved in accordance with the provisions of this Article 27 and the **PPB** Rules. This procedure for resolving all disputes of the kind delineated herein shall be the exclusive means of resolving any such disputes.

27.1.1 This Article 27 shall not apply to disputes concerning matters dealt with in other sections of the **PPB** Rules, or to disputes involving patents, copyrights, trademarks, or trade secrets (as interpreted by the courts of New York State) relating to proprietary rights in computer software.

27.1.2 This Article 27 shall apply only to disputes about the scope of **Work** delineated by the **Contract**, the interpretation of **Contract** documents, the amount to be paid for **Extra Work** or disputed work performed in connection with the **Contract**, the conformity of the **Contractor's Work** to the **Contract**, and the acceptability and quality of the **Contractor's Work**; such disputes arise when the **Engineer**, **Resident Engineer**, **Engineering Audit Officer**, or other designee of the **Commissioner** makes a determination with which the **Contractor** disagrees.

27.2 All determinations required by this Article 27 shall be made in writing clearly stated, with a reasoned explanation for the determination based on the information and evidence presented to the party making the determination. Failure to make such determination within the time required by this Article 27 shall be deemed a non-determination without prejudice that will allow application to the next level.

27.3 During such time as any dispute is being presented, heard, and considered pursuant to this Article 27, the **Contract** terms shall remain in force and the **Contractor** shall continue to perform **Work** as directed by the **ACCO** or the **Engineer**. Failure of the **Contractor** to continue **Work** as directed shall constitute a waiver by the **Contractor** of its claim.

27.4 Presentation of Disputes to **Commissioner**.

Notice of Dispute and Agency Response. The **Contractor** shall present its dispute in writing ("Notice of Dispute") to the **Commissioner** within thirty (30) Days of receiving written notice of the determination or action that is the subject of the dispute. This notice requirement shall not be read to replace any other notice requirements contained in the **Contract**. The Notice of Dispute shall include all the facts, evidence, documents, or other basis upon which the **Contractor** relies in support of its position, as well as a detailed computation demonstrating how any amount of money claimed by the **Contractor** in the dispute was arrived at. Within thirty (30) Days after receipt of the detailed written submission comprising the complete Notice of Dispute, the **Engineer**, **Resident Engineer**, **Engineering Audit Officer**, or other designee of the **Commissioner** shall submit to the **Commissioner** all materials he or she deems pertinent to the dispute. Following initial submissions to the **Commissioner**, either party may demand of the other the production of any document or other material the demanding party believes may be relevant to the dispute. The requested party shall produce all relevant materials that are not otherwise

protected by a legal privilege recognized by the courts of New York State. Any question of relevancy shall be determined by the **Commissioner** whose decision shall be final. Willful failure of the **Contractor** to produce any requested material whose relevancy the **Contractor** has not disputed, or whose relevancy has been affirmatively determined, shall constitute a waiver by the **Contractor** of its claim.

27.4.1 **Commissioner** Inquiry. The **Commissioner** shall examine the material and may, in his or her discretion, convene an informal conference with the **Contractor**, the **ACCO**, and the **Engineer**, **Resident Engineer**, **Engineering Audit Officer**, or other designee of the **Commissioner** to resolve the issue by mutual consent prior to reaching a determination. The **Commissioner** may seek such technical or other expertise as he or she shall deem appropriate, including the use of neutral mediators, and require any such additional material from either or both parties as he or she deems fit. The **Commissioner's** ability to render, and the effect of, a decision hereunder shall not be impaired by any negotiations in connection with the dispute presented, whether or not the **Commissioner** participated therein. The **Commissioner** may or, at the request of any party to the dispute, shall compel the participation of any **Other Contractor** with a contract related to the **Work** of this **Contract**, and that **Contractor** shall be bound by the decision of the **Commissioner**. Any **Other Contractor** thus brought into the dispute resolution proceeding shall have the same rights and obligations under this Article 27 as the **Contractor** initiating the dispute.

27.4.2 **Commissioner** Determination. Within thirty (30) **Days** after the receipt of all materials and information, or such longer time as may be agreed to by the parties, the **Commissioner** shall make his or her determination and shall deliver or send a copy of such determination to the **Contractor**, the **ACCO**, and **Engineer**, **Resident Engineer**, **Engineering Audit Officer**, or other designee of the **Commissioner**, as applicable, together with a statement concerning how the decision may be appealed.

27.4.3 Finality of **Commissioner's** Decision. The **Commissioner's** decision shall be final and binding on all parties, unless presented to the Contract Dispute Resolution Board pursuant to this Article 27. The **City** may not take a petition to the Contract Dispute Resolution Board. However, should the **Contractor** take such a petition, the **City** may seek, and the Contract Dispute Resolution Board may render, a determination less favorable to the **Contractor** and more favorable to the **City** than the decision of the **Commissioner**.

27.5 Presentation of Dispute to the **Comptroller**. Before any dispute may be brought by the **Contractor** to the Contract Dispute Resolution Board, the **Contractor** must first present its claim to the **Comptroller** for his or her review, investigation, and possible adjustment.

27.5.1 Time, Form, and Content of Notice. Within thirty (30) **Days** of its receipt of a decision by the **Commissioner**, the **Contractor** shall submit to the **Comptroller** and to the **Commissioner** a Notice of Claim regarding its dispute with the **Agency**. The Notice of Claim shall consist of (i) a brief written statement of the substance of the dispute, the amount of money, if any, claimed and the reason(s) the **Contractor** contends the dispute was wrongly decided by the **Commissioner**; (ii) a copy of the written decision of the **Commissioner**; and (iii) a copy of all materials submitted by the **Contractor** to the **Agency**, including the Notice of Dispute. The **Contractor** may not present to the **Comptroller** any material not presented to the **Commissioner**, except at the request of the **Comptroller**.

27.5.2 Response. Within thirty (30) **Days** of receipt of the Notice of Claim, the **Agency** shall make available to the **Comptroller** a copy of all material submitted by the **Agency** to the **Commissioner** in connection with the dispute. The **Agency** may not present to the **Comptroller** any material not presented to the **Commissioner** except at the request of the **Comptroller**.

27.5.3 **Comptroller** Investigation. The **Comptroller** may investigate the claim in dispute and, in the course of such investigation, may exercise all powers provided in Sections 7-201 and 7-203 of the Administrative Code. In addition, the **Comptroller** may demand of either party, and such party shall provide, whatever additional material the **Comptroller** deems pertinent to the claim, including original business records of the **Contractor**. Willful failure of the **Contractor** to produce within fifteen (15) **Days** any material requested by the **Comptroller** shall constitute a waiver by the **Contractor** of its claim. The **Comptroller** may also schedule an informal conference to be attended by the **Contractor**, **Agency** representatives, and any other personnel desired by the **Comptroller**.

27.5.4 Opportunity of **Comptroller** to Compromise or Adjust Claim. The **Comptroller** shall have forty-five (45) **Days** from his or her receipt of all materials referred to in Article 27.5.3 to investigate the disputed claim. The period for investigation and compromise may be further extended by agreement between the **Contractor** and the **Comptroller**, to a maximum of ninety (90) **Days** from the **Comptroller's** receipt of all materials. The **Contractor** may not present its petition to the Contract Dispute Resolution Board until the period for investigation and compromise delineated in this Article 27.5.4 has expired. In compromising or adjusting any claim hereunder, the **Comptroller** may not revise or disregard the terms of the **Contract** between the parties.

27.6 Contract Dispute Resolution Board. There shall be a Contract Dispute Resolution Board composed of:

27.6.1 The chief administrative law judge of the Office of Administrative Trials and Hearings (OATH) or his/her designated OATH administrative law judge, who shall act as chairperson, and may adopt operational procedures and issue such orders consistent with this Article 27 as may be necessary in the execution of the Contract Dispute Resolution Board's functions, including, but not limited to, granting extensions of time to present or respond to submissions;

27.6.2 The **CCPO** or his/her designee; any designee shall have the requisite background to consider and resolve the merits of the dispute and shall not have participated personally and substantially in the particular matter that is the subject of the dispute or report to anyone who so participated; and

27.6.3 A person with appropriate expertise who is not an employee of the **City**. This person shall be selected by the presiding administrative law judge from a prequalified panel of individuals, established and administered by OATH with appropriate background to act as decision-makers in a dispute. Such individual may not have a contract or dispute with the **City** or be an officer or employee of any company or organization that does, or regularly represents persons, companies, or organizations having disputes with the **City**.

27.7 Petition to the Contract Dispute Resolution Board. In the event the claim has not been settled or adjusted by the **Comptroller** within the period provided in this Article 27, the **Contractor**,

within thirty (30) **Days** thereafter, may petition the Contract Dispute Resolution Board to review the **Commissioner's** determination.

27.7.1 Form and Content of Petition by **Contractor**. The **Contractor** shall present its dispute to the Contract Dispute Resolution Board in the form of a petition, which shall include (i) a brief written statement of the substance of the dispute, the amount of money, if any, claimed, and the reason(s) the **Contractor** contends the dispute was wrongly decided by the **Commissioner**; (ii) a copy of the written Decision of the **Commissioner,** (iii) copies of all materials submitted by the **Contractor** to the Agency; (iv) a copy of the written decision of the **Comptroller**, if any, and (v) copies of all correspondence with, or written material submitted by the **Contractor**, to the **Comptroller**. The **Contractor** shall concurrently submit four (4) complete sets of the Petition: one set to the **City** Corporation Counsel (Attn: Commercial and Real Estate Litigation Division) and three (3) sets to the Contract Dispute Resolution Board at OATH's offices with proof of service on the **City** Corporation Counsel. In addition, the **Contractor** shall submit a copy of the written statement of the substance of the dispute, cited in (i) above, to both the **Commissioner** and the **Comptroller**.

27.7.2 **Agency** Response. Within thirty (30) **Days** of its receipt of the Petition by the **City** Corporation Counsel, the **Agency** shall respond to the brief written statement of the **Contractor** and make available to the Contract Dispute Resolution Board all material it submitted to the **Commissioner** and **Comptroller**. Three (3) complete copies of the **Agency** response shall be provided to the Contract Dispute Resolution Board and one to the **Contractor**. Extensions of time for submittal of the **Agency** response shall be given as necessary upon a showing of good cause or, upon consent of the parties, for an initial period of up to thirty (30) Days.

27.7.3 Further Proceedings. The Contract Dispute Resolution Board shall permit the **Contractor** to present its case by submission of memoranda, briefs, and oral argument. The Contract Dispute Resolution Board shall also permit the **Agency** to present its case in response to the **Contractor** by submission of memoranda, briefs, and oral argument. If requested by the **City** Corporation Counsel, the **Comptroller** shall provide reasonable assistance in the preparation of the **Agency's** case. Neither the **Contractor** nor the **Agency** may support its case with any documentation or other material that was not considered by the **Comptroller**, unless requested by the Contract Dispute Resolution Board. The Contract Dispute Resolution Board, in its discretion, may seek such technical or other expert advice as it shall deem appropriate and may seek, on its own or upon application of a party, any such additional material from any party as it deems fit. The Contract Dispute Resolution Board, in its discretion, may combine more than one dispute between the parties for concurrent resolution.

27.7.4 Contract Dispute Resolution Board Determination. Within forty-five (45) **Days** of the conclusion of all written submissions and oral arguments, the Contract Dispute Resolution Board shall render a written decision resolving the dispute. In an unusually complex case, the Contract Dispute Resolution Board may render its decision in a longer period, not to exceed ninety (90) **Days**, and shall so advise the parties at the commencement of this period. The Contract Dispute Resolution Board's decision must be consistent with the terms of the **Contract**. Decisions of the Contract Dispute Resolution Board shall only resolve matters before the Contract Dispute Resolution Board and shall not have precedential effect with respect to matters not before the Contract Dispute Resolution Board.

27.7.5 Notification of Contract Dispute Resolution Board Decision. The Contract Dispute Resolution Board shall send a copy of its decision to the **Contractor**, the **ACCO**, the Engineer, the **Comptroller**, the **City** Corporation Counsel, the CCPO, and the **PPB**. A decision in favor of the **Contractor** shall be subject to the prompt payment provisions of the **PPB** Rules. The Required Payment Date shall be thirty (30) Days after the date the parties are formally notified of the Contract Dispute Resolution Board's decision.

27.7.6 Finality of Contract Dispute Resolution Board Decision. The Contract Dispute Resolution Board's decision shall be final and binding on all parties. Any party may seek review of the Contract Dispute Resolution Board's decision solely in the form of a challenge, filed within four (4) months of the date of the Contract Dispute Resolution Board's decision, in a court of competent jurisdiction of the State of New York, County of New York pursuant to Article 78 of the Civil Practice Law and Rules. Such review by the court shall be limited to the question of whether or not the Contract Dispute Resolution Board's decision was made in violation of lawful procedure, was affected by an error of **Law**, or was arbitrary and capricious or an abuse of discretion. No evidence or information shall be introduced or relied upon in such proceeding that was not presented to the Contract Dispute Resolution Board in accordance with this Article 27.

27.8 Any termination, cancellation, or alleged breach of the **Contract** prior to or during the pendency of any proceedings pursuant to this Article 27 shall not affect or impair the ability of the **Commissioner** or Contract Dispute Resolution Board to make a binding and final decision pursuant to this Article 27.

ARTICLE 28. RECORD KEEPING FOR EXTRA OR DISPUTED WORK OR WORK ON A TIME & MATERIALS BASIS

28.1 While the **Contractor** or any of its **Subcontractors** is performing **Work** on a time and material basis or **Extra Work** on a time and material basis ordered by the **Commissioner** under Article 25, or where the **Contractor** believes that it or any of its **Subcontractors** is performing **Extra Work** but a final determination by **Agency** has not been made, or the **Contractor** or any of its **Subcontractors** is performing disputed **Work** (whether on or off the **Site**), or complying with a determination or order under protest in accordance with Articles 11, 27, and 30, in each such case the **Contractor** shall furnish the **Resident Engineer** daily with three (3) copies of written statements signed by the **Contractor's** representative at the **Site** showing:

28.1.1 The name, trade, and number of each worker employed on such **Work** or engaged in complying with such determination or order, the number of hours employed, and the character of the **Work** each is doing; and

28.1.2 The nature and quantity of any materials, plant and equipment furnished or used in connection with the performance of such **Work** or compliance with such determination or order, and from whom purchased or rented.

28.2 A copy of such statement will be countersigned by the **Resident Engineer**, noting thereon any items not agreed to or questioned, and will be returned to the **Contractor** within two (2) **Days** after submission.

28.3 The **Contractor** and its **Subcontractors**, when required by the **Commissioner**, or the **Comptroller**, shall also produce for inspection, at the office of the **Contractor** or **Subcontractor**, any and all of its books, bid documents, financial statements, vouchers, records, daily job diaries and reports,

and cancelled checks, and any other documents relating to showing the nature and quantity of the labor, materials, plant and equipment actually used in the performance of such **Work**, or in complying with such determination or order, and the amounts expended therefor, and shall permit the **Commissioner** and the **Comptroller** to make such extracts therefrom, or copies thereof, as they or either of them may desire.

28.4 In connection with the examination provided for herein, the **Commissioner**, upon demand therefor, will produce for inspection by the **Contractor** such records as the **Agency** may have with respect to such **Extra Work** or disputed **Work** performed under protest pursuant to order of the **Commissioner**, except those records and reports which may have been prepared for the purpose of determining the accuracy and validity of the **Contractor's** claim.

28.5 Failure to comply strictly with these requirements shall constitute a waiver of any claim for extra compensation or damages on account of the performance of such **Work** or compliance with such determination or order.

ARTICLE 29. OMITTED WORK

29.1 If any **Contract Work** in a lump sum **Contract**, or if any part of a lump sum item in a unit price, lump sum, or percentage-bid **Contract** is omitted by the **Commissioner** pursuant to Article 33, the **Contract** price, subject to audit by the EAO, shall be reduced by a pro rata portion of the lump sum bid amount based upon the percent of **Work** omitted subject to Article 29.4. For the purpose of determining the pro rata portion of the lump sum bid amount, the bid breakdown submitted in accordance with Article 41 shall be considered, but shall not be the determining factor.

29.2 If the whole of a lump sum item or units of any other item is so omitted by the **Commissioner** in a unit price, lump sum, or percentage-bid **Contract**, then no payment will be made therefor except as provided in Article 29.4.

29.3 For units that have been ordered but are only partially completed, the unit price shall be reduced by a pro rata portion of the unit price bid based upon the percentage of **Work** omitted subject to Article 29.4.

29.4 In the event the **Contractor**, with respect to any omitted **Work**, has purchased any non-cancelable material and/or equipment that is not capable of use except in the performance of this **Contract** and has been specifically fabricated for the sole purpose of this **Contract**, but not yet incorporated into the **Work**, the **Contractor** shall be paid for such material and/or equipment in accordance with Article 64.2.1(b); provided, however, such payment is contingent upon the **Contractor's** delivery of such material and/or equipment in acceptable condition to a location designated by the **City**.

29.5 The **Contractor** agrees to make no claim for damages or for loss of overhead and profit with regard to any omitted **Work**.

ARTICLE 30. NOTICE AND DOCUMENTATION OF COSTS AND DAMAGES; PRODUCTION OF FINANCIAL RECORDS

30.1 If the **Contractor** shall claim to be sustaining damages by reason of any act or omission of the **City** or its agents, it shall submit to the **Commissioner** within forty-five (45) **Days** from the time such damages are first incurred, and every thirty (30) **Days** thereafter to the extent additional damages are being incurred for the same condition, verified statements of the details and the amounts of such

damages, together with documentary evidence of such damages. The **Contractor** may submit any of the above statements within such additional time as may be granted by the **Commissioner** in writing upon written request therefor. Failure of the **Commissioner** to respond in writing to a written request for additional time within thirty (30) **Days** shall be deemed a denial of the request. On failure of the **Contractor** to strictly comply with the foregoing provisions, such claims shall be deemed waived and no right to recover on such claims shall exist. Damages that the **Contractor** may claim in any action or dispute resolution procedure arising under or by reason of this **Contract** shall not be different from or in excess of the statements and documentation made pursuant to this Article 30. This Article 30.1 does not apply to claims submitted to the **Commissioner** pursuant to Article 11 or to claims disputing a determination under Article 27.

30.2 In addition to the foregoing statements, the **Contractor** shall, upon notice from the **Commissioner**, produce for examination at the **Contractor's** office, by the **Engineer**, **Architect** or **Project Manager**, all of its books of account, bills, invoices, payrolls, subcontracts, time books, daily reports, bank deposit books, bank statements, check books, and cancelled checks, showing all of its acts and transactions in connection with or relating to or arising by reason of this **Contract**, and submit itself and persons in its employment, for examination under oath by any person designated by the **Commissioner** or **Comptroller** to investigate claims made or disputes against the **City** under this **Contract**. At such examination, a duly authorized representative of the **Contractor** may be present.

30.3 In addition to the statements required under Article 28 and this Article 30, the **Contractor** and/or its **Subcontractor** shall, within thirty (30) **Days** upon notice from the **Commissioner** or **Comptroller**, produce for examination at the **Contractor's** and/or **Subcontractor's** office, by a representative of either the **Commissioner** or **Comptroller**, all of its books of account, bid documents, financial statements, accountant workpapers, bills, invoices, payrolls, subcontracts, time books, daily reports, bank deposit books, bank statements, check books, and cancelled checks, showing all of its acts and transactions in connection with or relating to or arising by reason of this **Contract**. Further, the **Contractor** and/or its **Subcontractor** shall submit any person in its employment, for examination under oath by any person designated by the **Commissioner** or **Comptroller** to investigate claims made or disputes against the **City** under this **Contract**. At such examination, a duly authorized representative of the **Contractor** may be present.

30.4 Unless the information and examination required under Article 30.3 is provided by the **Contractor** and/or its **Subcontractor** upon thirty (30) **Days'** notice from the **Commissioner** or **Comptroller**, or upon the **Commissioner's** or **Comptroller's** written authorization to extend the time to comply, the **City** shall be released from all claims arising under, relating to or by reason of this **Contract**, except for sums certified by the **Commissioner** to be due under the provisions of this **Contract**. It is further stipulated and agreed that no person has the power to waive any of the foregoing provisions and that in any action or dispute resolution procedure against the **City** to recover any sum in excess of the sums certified by the **Commissioner** to be due under or by reason of this **Contract**, the **Contractor** must allege in its complaint and prove, at trial or during such dispute resolution procedure, compliance with the provisions of this Article 30.

30.5 In addition, after the commencement of any action or dispute resolution procedure by the **Contractor** arising under or by reason of this **Contract**, the **City** shall have the right to require the **Contractor** to produce for examination under oath, up until the trial of the action or hearing before the Contract Dispute Resolution Board, the books and documents described in Article 30.3 and submit itself and all persons in its employ for examination under oath. If this Article 30 is not complied with as required, then the **Contractor** hereby consents to the dismissal of the action or dispute resolution procedure.

CHAPTER VII: POWERS OF THE RESIDENT ENGINEER,THE ENGINEER OR ARCHITECT AND THE COMMISSIONER

ARTICLE 31. THE RESIDENT ENGINEER

31.1 The **Resident Engineer** shall have the power to inspect, supervise, and control the performance of the **Work**, subject to review by the **Commissioner**. The **Resident Engineer** shall not, however, have the power to issue an **Extra Work** order, except as specifically designated in writing by the **Commissioner**.

ARTICLE 32. THE ENGINEER OR ARCHITECT OR PROJECT MANAGER

32.1 The **Engineer** or **Architect** or **Project Manager**, in addition to those matters elsewhere herein delegated to the **Engineer** and expressly made subject to his/her determination, direction or approval, shall have the power, subject to review by the **Commissioner**:

32.1.1 To determine the amount, quality, and location of the **Work** to be paid for hereunder; and

32.1.2 To determine all questions in relation to the **Work**, to interpret the **Contract Drawings**, **Specifications**, and **Addenda**, and to resolve all patent inconsistencies or ambiguities therein; and

32.1.3 To determine how the **Work** of this **Contract** shall be coordinated with **Work** of **Other Contractors** engaged simultaneously on this **Project**, including the power to suspend any part of the **Work**, but not the whole thereof; and

32.1.4 To make minor changes in the **Work** as he/she deems necessary, provided such changes do not result in a net change in the cost to the **City** or to the **Contractor** of the **Work** to be done under the **Contract**; and

32.1.5 To amplify the **Contract Drawings**, add explanatory information and furnish additional **Specifications** and drawings, consistent with this **Contract**.

32.2 The foregoing enumeration shall not imply any limitation upon the power of the **Engineer** or **Architect** or **Project Manager**, for it is the intent of this **Contract** that all of the **Work** shall generally be subject to his/her determination, direction, and approval, except where the determination, direction or approval of someone other than the **Engineer** or **Architect** or **Project Manager** is expressly called for herein.

32.3 The **Engineer** or **Architect** or **Project Manager** shall not, however, have the power to issue an **Extra Work** order, except as specifically designated in writing by the **Commissioner**.

ARTICLE 33. THE COMMISSIONER

33.1 The **Commissioner**, in addition to those matters elsewhere herein expressly made subject to his/her determination, direction or approval, shall have the power:

33.1.1 To review and make determinations on any and all questions in relation to this **Contract** and its performance; and

33.1.2 To modify or change this **Contract** so as to require the performance of **Extra Work** (subject, however, to the limitations specified in Article 25) or the omission of **Contract Work**; and

33.1.3 To suspend the whole or any part of the **Work** whenever in his/her judgment such suspension is required:

33.1.3(a) In the interest of the **City** generally; or

33.1.3(b) To coordinate the **Work** of the various contractors engaged on this **Project** pursuant to the provisions of Article 12; or

33.1.3(c) To expedite the completion of the entire **Project** even though the completion of this particular **Contract** may thereby be delayed.

ARTICLE 34. NO ESTOPPEL

34.1 Neither the **City** nor any **Agency**, official, agent or employee thereof, shall be bound, precluded or estopped by any determination, decision, approval, order, letter, payment or certificate made or given under or in connection with this **Contract** by the **City**, the **Commissioner**, the **Engineer**, the **Resident Engineer**, or any other official, agent or employee of the **City**, either before or after the final completion and acceptance of the **Work** and payment therefor:

34.1.1 From showing the true and correct classification, amount, quality or character of the **Work** actually done; or that any such determination, decision, order, letter, payment or certificate was untrue, incorrect or improperly made in any particular, or that the **Work**, or any part thereof, does not in fact conform to the requirements of this **Contract**; and

34.1.2 From demanding and recovering from the **Contractor** any overpayment made to it, or such damages as the **City** may sustain by reason of the **Contractor's** failure to perform each and every part of its **Contract**.

CHAPTER VIII: LABOR PROVISIONS

ARTICLE 35. EMPLOYEES

35.1 The **Contractor** and its **Subcontractors** shall not employ on the **Work**:

35.1.1 Anyone who is not competent, faithful and skilled in the **Work** for which he/she shall be employed; and whenever the **Commissioner** shall inform the **Contractor**, in writing, that any employee is, in his/her opinion, incompetent, unfaithful or disobedient, that employee shall be discharged from the **Work** forthwith, and shall not again be employed upon it; or

35.1.2 Any labor, materials or means whose employment, or utilization during the course of this **Contract**, may tend to or in any way cause or result in strikes, work stoppages, delays, suspension of **Work** or similar troubles by workers employed by the **Contractor** or its **Subcontractors**, or by any of the trades working in or about the buildings and premises where **Work** is being performed under this **Contract**, or by **Other Contractors** or their **Subcontractors** pursuant to other contracts, or on any other building or premises owned or operated by the **City**, its **Agencies**, departments, boards or authorities. Any violation by the **Contractor** of this requirement may, upon certification of the **Commissioner**, be considered as proper and sufficient cause for declaring the **Contractor** to be in default, and for the **City** to take action against it as set forth in Chapter X of this **Contract**, or such other article of this **Contract** as the Commissioner may deem proper; or

35.1.3 In accordance with Section 220.3-e of the Labor Law of the State of New York (hereinafter "Labor Law"), the **Contractor** and its **Subcontractors** shall not employ on the **Work** any apprentice, unless he/she is a registered individual, under a bona fide program registered with the New York State Department of Labor. The allowable ratio of apprentices to journey-level workers in any craft classification shall not be greater than the ratio permitted to the **Contractor** as to its work force on any job under the registered program. Any employee listed on a payroll at an apprentice wage rate, who is not registered as above, shall be paid the wage rate determined by the **Comptroller** of the **City** for the classification of **Work** actually performed. The **Contractor** or **Subcontractor** will be required to furnish written evidence of the registration of its program and apprentices as well as all the appropriate ratios and wage rates, for the area of the construction prior to using any apprentices on the **Contract Work**.

35.2 If the total cost of the **Work** under this **Contract** is at least two hundred fifty thousand ($250,000) dollars, all laborers, workers, and mechanics employed in the performance of the **Contract** on the public work site, either by the **Contractor**, **Subcontractor** or other person doing or contracting to do the whole or a part of the **Work** contemplated by the **Contract**, shall be certified prior to performing any **Work** as having successfully completed a course in construction safety and health approved by the United States Department of Labor's Occupational Safety and Health Administration that is at least ten (10) hours in duration.

35.3 In accordance with Local Law Nos. 30-2012 and 33-2012, codified at sections 6-132 and 12-113 of the Administrative Code, respectively,

35.3.1 The **Contractor** shall not take an adverse personnel action with respect to an officer or employee in retaliation for such officer or employee making a report of information concerning conduct which such officer or employee knows or reasonably believes to involve corruption, criminal activity, conflict of interest, gross mismanagement or abuse of authority by any officer or employee relating to this **Contract** to (a) the Commissioner of the Department of Investigation, (b) a member of the New York City Council, the Public Advocate, or the **Comptroller**, or (c) the **CCPO**, **ACCO**, **Agency** head, or **Commissioner**.

35.3.2 If any of the **Contractor**'s officers or employees believes that he or she has been the subject of an adverse personnel action in violation of Article 35.3.1, he or she shall be entitled to bring a cause of action against the **Contractor** to recover all relief necessary to make him or her whole. Such relief may include but is not limited to: (a) an injunction to restrain continued retaliation, (b) reinstatement to the position such employee would have had but for the retaliation or to an equivalent position, (c) reinstatement of full fringe benefits and seniority rights, (d) payment of two times back

pay, plus interest, and (e) compensation for any special damages sustained as a result of the retaliation, including litigation costs and reasonable attorney's fees.

35.3.3 The **Contractor** shall post a notice provided by the **City** in a prominent and accessible place on any site where work pursuant to the **Contract** is performed that contains information about:

35.3.3(a) how its employees can report to the New York City Department of Investigation allegations of fraud, false claims, criminality or corruption arising out of or in connection with the **Contract**; and

35.3.3(b) the rights and remedies afforded to its employees under Administrative Code sections 7-805 (the New York City False Claims Act) and 12-113 (the Whistleblower Protection Expansion Act) for lawful acts taken in connection with the reporting of allegations of fraud, false claims, criminality or corruption in connection with the **Contract**.

35.3.4 For the purposes of this Article 35.3, "adverse personnel action" includes dismissal, demotion, suspension, disciplinary action, negative performance evaluation, any action resulting in loss of staff, office space, equipment or other benefit, failure to appoint, failure to promote, or any transfer or assignment or failure to transfer or assign against the wishes of the affected officer or employee.

35.3.5 This Article 35.3 is applicable to all of the **Contractor**'s **Subcontractors** having subcontracts with a value in excess of $100,000; accordingly, the **Contractor** shall include this rider in all subcontracts with a value a value in excess of $100,000.

35.4 Article 35.3 is not applicable to this **Contract** if it is valued at $100,000 or less. Articles 35.3.1, 35.3.2, 35.3.4, and 35.3.5 are not applicable to this **Contract** if it was solicited pursuant to a finding of an emergency.

35.5 Paid Sick Leave Law.

35.5.1 Introduction and General Provisions.

35.5.1(a) The Earned Sick Time Act, also known as the Paid Sick Leave Law ("PSLL"), requires covered employees who annually perform more than 80 hours of work in New York City to be provided with paid sick time.[2] Contractors of the **City** or of other governmental entities may be required to provide sick time pursuant to the PSLL.

35.5.1(b) The PSLL became effective on April 1, 2014, and is codified at Title 20, Chapter 8, of the New York City Administrative Code. It is administered by the City's Department of Consumer Affairs ("DCA"); DCA's rules promulgated under the PSLL are codified at Chapter 7 of Title 6 of the Rules of the City of New York ("Rules").

[2] Pursuant to the PSLL, if fewer than five employees work for the same employer, as determined pursuant to New York City Administrative Code § 20-912(g), such employer has the option of providing such employees uncompensated sick time.

35.5.1(c) The **Contractor** agrees to comply in all respects with the PSLL and the Rules, and as amended, if applicable, in the performance of this **Contract**. The **Contractor** further acknowledges that such compliance is a material term of this **Contract** and that failure to comply with the PSLL in performance of this **Contract** may result in its termination.

35.5.1(d) The **Contractor** must notify the **Agency Chief Contracting Officer** of the **Agency** with whom it is contracting in writing within ten (10) days of receipt of a complaint (whether oral or written) regarding the PSLL involving the performance of this **Contract**. Additionally, the **Contractor** must cooperate with DCA's education efforts and must comply with DCA's subpoenas and other document demands as set forth in the PSLL and Rules.

35.5.1(e) The PSLL is summarized below for the convenience of the **Contractor**. The **Contractor** is advised to review the PSLL and Rules in their entirety. On the website www.nyc.gov/PaidSickLeave there are links to the PSLL and the associated Rules as well as additional resources for employers, such as Frequently Asked Questions, timekeeping tools and model forms, and an event calendar of upcoming presentations and webinars at which the **Contractor** can get more information about how to comply with the PSLL. The **Contractor** acknowledges that it is responsible for compliance with the PSLL notwithstanding any inconsistent language contained herein.

35.5.2 Pursuant to the PSLL and the Rules: Applicability, Accrual, and Use.

35.5.2(a) An employee who works within the City of New York for more than eighty hours in any consecutive 12-month period designated by the employer as its "calendar year" pursuant to the PSLL ("Year") must be provided sick time. Employers must provide a minimum of one hour of sick time for every 30 hours worked by an employee and compensation for such sick time must be provided at the greater of the employee's regular hourly rate or the minimum wage. Employers are not required to provide more than 40 hours of sick time to an employee in any Year.

35.5.2(b) An employee has the right to determine how much sick time he or she will use, provided that employers may set a reasonable minimum increment for the use of sick time not to exceed four hours per **Day**. In addition, an employee may carry over up to 40 hours of unused sick time to the following Year, provided that no employer is required to allow the use of more than forty hours of sick time in a Year or carry over unused paid sick time if the employee is paid for such unused sick time and the employer provides the employee with at least the legally required amount of paid sick time for such employee for the immediately subsequent Year on the first **Day** of such Year.

35.5.2(c) An employee entitled to sick time pursuant to the PSLL may use sick time for any of the following:

i. such employee's mental illness, physical illness, injury, or health condition or the care of such illness, injury, or condition or such employee's need for medical diagnosis or preventive medical care;
ii. such employee's care of a family member (an employee's child, spouse, domestic partner, parent, sibling, grandchild or grandparent, or the child or parent of an employee's spouse or domestic partner) who has a mental

illness, physical illness, injury or health condition or who has a need for medical diagnosis or preventive medical care;

iii. closure of such employee's place of business by order of a public official due to a public health emergency; or

iv. such employee's need to care for a child whose school or childcare provider has been closed due to a public health emergency.

35.5.2(d) An employer must not require an employee, as a condition of taking sick time, to search for a replacement. However, an employer may require an employee to provide: reasonable notice of the need to use sick time; reasonable documentation that the use of sick time was needed for a reason above if for an absence of more than three consecutive work days; and/or written confirmation that an employee used sick time pursuant to the PSLL. However, an employer may not require documentation specifying the nature of a medical condition or otherwise require disclosure of the details of a medical condition as a condition of providing sick time and health information obtained solely due to an employee's use of sick time pursuant to the PSLL must be treated by the employer as confidential.

35.5.2(e) If an employer chooses to impose any permissible discretionary requirement as a condition of using sick time, it must provide to all employees a written policy containing those requirements, using a delivery method that reasonably ensures that employees receive the policy. If such employer has not provided its written policy, it may not deny sick time to an employee because of non-compliance with such a policy.

35.5.2(f) Sick time to which an employee is entitled must be paid no later than the payday for the next regular payroll period beginning after the sick time was used.

35.5.3 Exemptions and Exceptions. Notwithstanding the above, the PSLL does not apply to any of the following:

35.5.3(a) an independent contractor who does not meet the definition of employee under section 190(2) of the New York State Labor Law;

35.5.3(b) an employee covered by a valid collective bargaining agreement in effect on April 1, 2014, until the termination of such agreement;

35.5.3(c) an employee in the construction or grocery industry covered by a valid collective bargaining agreement if the provisions of the PSLL are expressly waived in such collective bargaining agreement;

35.5.3(d) an employee covered by another valid collective bargaining agreement if such provisions are expressly waived in such agreement and such agreement provides a benefit comparable to that provided by the PSLL for such employee;

35.5.3(e) an audiologist, occupational therapist, physical therapist, or speech language pathologist who is licensed by the New York State Department of Education and who calls in for work assignments at will, determines his or her own schedule, has the ability to reject or accept any assignment referred to him or her, and is paid an average hourly wage that is at least four times the federal minimum wage;

35.5.3(f) an employee in a work study program under Section 2753 of Chapter 42 of the United States Code;

35.5.3(g) an employee whose work is compensated by a qualified scholarship program as that term is defined in the Internal Revenue Code, Section 117 of Chapter 20 of the United States Code; or

35.5.3(h) a participant in a Work Experience Program (WEP) under section 336-c of the New York State Social Services Law.

35.5.4 Retaliation Prohibited. An employer may not threaten or engage in retaliation against an employee for exercising or attempting in good faith to exercise any right provided by the PSLL. In addition, an employer may not interfere with any investigation, proceeding, or hearing pursuant to the PSLL.

35.5.5 Notice of Rights.

35.5.5(a) An employer must provide its employees with written notice of their rights pursuant to the PSLL. Such notice must be in English and the primary language spoken by an employee, provided that DCA has made available a translation into such language. Downloadable notices are available on DCA's website at http://www.nyc.gov/html/dca/html/law/PaidSickLeave.shtml.

35.5.5(b) Any person or entity that willfully violates these notice requirements is subject to a civil penalty in an amount not to exceed fifty dollars for each employee who was not given appropriate notice.

35.5.6 Records. An employer must retain records documenting its compliance with the PSLL for a period of at least three years, and must allow DCA to access such records in furtherance of an investigation related to an alleged violation of the PSLL.

35.5.7 Enforcement and Penalties.

35.5.7(a) Upon receiving a complaint alleging a violation of the PSLL, DCA has the right to investigate such complaint and attempt to resolve it through mediation. Within 30 **Days** of written notification of a complaint by DCA, or sooner in certain circumstances, the employer must provide DCA with a written response and such other information as DCA may request. If DCA believes that a violation of the PSLL has occurred, it has the right to issue a notice of violation to the employer.

35.5.7(b) DCA has the power to grant an employee or former employee all appropriate relief as set forth in New York City Administrative Code § 20-924(d). Such relief may include, among other remedies, treble damages for the wages that should have been paid, damages for unlawful retaliation, and damages and reinstatement for unlawful discharge. In addition, DCA may impose on an employer found to have violated the PSLL civil penalties not to exceed $500 for a first violation, $750 for a second violation within two years of the first violation, and $1,000 for each succeeding violation within two years of the previous violation.

35.5.8 More Generous Polices and Other Legal Requirements. Nothing in the PSLL is intended to discourage, prohibit, diminish, or impair the adoption or retention of a more generous sick time policy, or the obligation of an employer to comply with any contract,

collective bargaining agreement, employment benefit plan or other agreement providing more generous sick time. The PSLL provides minimum requirements pertaining to sick time and does not preempt, limit or otherwise affect the applicability of any other law, regulation, rule, requirement, policy or standard that provides for greater accrual or use by employees of sick leave or time, whether paid or unpaid, or that extends other protections to employees. The PSLL may not be construed as creating or imposing any requirement in conflict with any federal or state law, rule or regulation.

35.6 HireNYC: Hiring and Reporting Requirements. This Article 35.6 applies to construction contracts of $1,000,000 or more. The **Contractor** shall comply with the requirements of Articles 35.6.1-35.6.5 for all non-trades jobs (e.g., for an administrative position arising out of **Work** ant located in New York City). The **Contractor** shall reasonably cooperate with SBS and the **City** on specific outreach events, including "Hire-on-the-Spot" events, for the hiring of trades workers in connection with the **Work**. If provided elsewhere in this **Contract**, this **Contract** is subject to a project labor agreement.

35.6.1 Enrollment. The **Contractor** shall enroll with the HireNYC system, found at www.nyc.gov/sbs, within thirty (30) days after the registration of this **Contract** pursuant to Section 328 of the New York City Charter. The **Contractor** shall provide information about the business, designate a primary contact and say whether it intends to hire for any entry to mid-level job opportunities arising from this **Contract** and located in New York City, and, if so, the approximate start date of the first hire.

35.6.2 Job Posting Requirements.

35.6.2(a) Once enrolled in HireNYC, the **Contractor** agrees to update the HireNYC portal with all entry to mid-level job opportunities arising from this **Contract** and located in New York City, if any, which shall be defined as jobs requiring no more than an associate degree, as provided by the New York State Department of Labor (see Column F of https://labor.ny.gov/stats/2012-2022- NYS-Employment-Prospects.xls). The information to be updated includes the types of entry and mid-level positions made available from the work arising from the **Contract** and located in New York City, the number of positions, the anticipated schedule of initiating the hiring process for these positions, and the contact information for the **Contractor's** representative charged with overseeing hiring. The **Contractor** must update the HireNYC portal with any hiring needs arising from the contract and located in New York City, and the requirements of the jobs to be filled, no less than three weeks prior to the intended first day of employment for each new position, except with the permission of SBS, not to be unreasonably withheld, and must also update the HireNYC portal as set forth below.

35.6.2(b) After enrollment through HireNYC and submission of relevant information, SBS will work with the **Contractor** to develop a recruitment plan which will outline the candidate screening process, and will provide clear instructions as to when, where, and how interviews will take place. HireNYC will screen applicants based on employer requirements and refer applicants whom it believes are qualified to the **Contractor** for interviews. The **Contractor** must interview referred applicants whom it believes are qualified.

35.6.2(c) After completing an interview of a candidate referred by HireNYC, the **Contractor** must provide feedback via the portal within twenty (20) business days to indicate which candidates were interviewed and hired, if any. In addition, the **Contractor** shall provide the start date of new hires, and additional information

reasonably related to such hires, within twenty (20) business days after the start date. In the event the **Contractor** does not have any job openings covered by this Rider in any given year, the **Contractor** shall be required to provide an annual update to HireNYC to that effect. For this purpose, the reporting year shall run from the date of the registration of the **Contract** pursuant to Charter section 328 and each anniversary date.

35.6.2(d) These requirements do not limit the **Contractor's** ability to assess the qualifications of prospective workers, and to make final hiring and retention decisions. No provision of this Article 35.6 shall be interpreted so as to require the **Contractor** to employ any particular worker.

35.6.2(e) In addition, the provisions of this Article 35.6 shall not apply to positions that the **Contractor** intends to fill with employees employed pursuant to the job retention provision of Section 22-505 of the Administrative Code of the City of New York. The **Contractor** shall not be required to report such openings with HireNYC. However, the **Contractor** shall enroll with the HireNYC system pursuant to Article 35.6.1, above, and, if such positions subsequently become open, then the remaining provisions of this Article 35.6 will apply.

35.6.3 Breach and Liquidated Damages. If the **Contractor** fails to comply with the terms of the **ContrSact** and this Article 35.6 (l) by not enrolling its business with HireNYC; (2) by not informing HireNYC, as required, of open positions; or (3) by failing to interview a qualified candidate, the **Agency** may assess liquidated damages in the amount of two-thousand five hundred dollars ($2,500) per breach. For all other events of noncompliance with the terms of this Article 35.6, the **Agency** may assess liquidated damages in the amount of five hundred dollars ($500) per breach. Furthermore, in the event the **Contractor** breaches the requirements of this Article 35.6 during the term of the **Contract**, the **City** may hold the **Contractor** in default of this **Contract**.

35.6.4 Audit Compliance. In addition to the auditing requirements set forth in other parts of the **Contract**, the **Contractor** shall permit SBS and the **City** to inspect any and all records concerning or relating to job openings or the hiring of individuals for work arising from the **Contract** and located in New York City. The **Contractor** shall permit an inspection within seven (7) business days of the request.

35.6.5 Other Reporting Requirements. The **Contractor** shall report to the **City**, on a monthly basis, all information reasonably requested by the **City** that is necessary for the **City** to comply with any reporting requirements imposed by **Law**, including any requirement that the **City** maintain a publicly accessible database. In addition, the **Contractor** agrees to comply with all reporting requirements imposed by **Law**, or as otherwise requested by the **City**.

35.6.6 Federal Hiring Requirements. If this **Contract** is federally funded (as indicated elsewhere in this Contract), the **Contractor** shall comply with all federal hiring requirements as may be set forth in this **Contract**, including, as applicable: (a) Section 3 of the HUD Act of 1968, which requires, to the greatest extent feasible, economic opportunities for 30 percent of new hires be given to low- and very low-income persons, particularly persons who are recipients of HUD assistance for housing and Executive Order 11246, which prohibits discrimination in employment due to race, color, religion, sex or national origin, and requires the implementation of goals for minority and female participation for work involving any construction trade.

ARTICLE 36. NO DISCRIMINATION

36.1 The **Contractor** specifically agrees, as required by Labor Law Section 220-e, as amended, that:

36.1.1 In the hiring of employees for the performance of **Work** under this **Contract** or any subcontract hereunder, neither the **Contractor**, **Subcontractor**, nor any person acting on behalf of such **Contractor** or **Subcontractor**, shall by reason of race, creed, color or national origin discriminate against any citizen of the State of New York who is qualified and available to perform the **Work** to which the employment relates;

36.1.2 Neither the **Contractor**, **Subcontractor**, nor any person on its behalf shall, in any manner, discriminate against or intimidate any employee hired for the performance of **Work** under this **Contract** on account of race, creed, color or national origin;

36.1.3 There may be deducted from the amount payable to the **Contractor** by the **City** under this **Contract** a penalty of fifty ($50.00) dollars for each person for each **Day** during which such person was discriminated against or intimidated in violation of the provisions of this **Contract**; and

36.1.4 This **Contract** may be cancelled or terminated by the **City** and all moneys due or to become due hereunder may be forfeited, for a second or any subsequent violation of the terms or conditions of this Article 36.

36.1.5 This Article 36 covers all construction, alteration and repair of any public building or public work occurring in the State of New York and the manufacture, sale, and distribution of materials, equipment, and supplies to the extent that such operations are performed within the State of New York pursuant to this **Contract**.

36.2 The **Contractor** specifically agrees, as required by Section 6-108 of the Administrative Code, as amended, that:

36.2.1 It shall be unlawful for any person engaged in the construction, alteration or repair of buildings or engaged in the construction or repair of streets or highways pursuant to a **Contract** with the **City** or engaged in the manufacture, sale or distribution of materials, equipment or supplies pursuant to a **Contract** with the **City** to refuse to employ or to refuse to continue in any employment any person on account of the race, color or creed of such person.

36.2.2 It shall be unlawful for any person or any servant, agent or employee of any person, described in Article 36.1.2, to ask, indicate or transmit, orally or in writing, directly or indirectly, the race, color or creed or religious affiliation of any person employed or seeking employment from such person, firm or corporation.

36.2.3 Breach of the foregoing provisions shall be deemed a violation of a material provision of this **Contract**.

36.2.4 Any person, or the employee, manager or owner of or officer of such firm or corporation who shall violate any of the provisions of this Article 36.2 shall, upon

conviction thereof, be punished by a fine of not more than one hundred ($100.00) dollars or by imprisonment for not more than thirty (30) **Days**, or both.

36.3 This **Contract** is subject to the requirements of Executive Order No. 50 (1980) ("E.O. 50"), as revised, and the rules and regulations promulgated thereunder. No contract will be awarded unless and until these requirements have been complied with in their entirety. By signing this **Contract**, the **Contractor** agrees that it:

36.3.1 Will not engage in any unlawful discrimination against any employee or applicant for employment because of race, creed, color, national origin, sex, age, disability, marital status or sexual orientation with respect to all employment decisions including, but not limited to, recruitment, hiring, upgrading, demotion, downgrading, transfer, training, rates of pay or other forms of compensation, layoff, termination, and all other terms and conditions of employment; and

36.3.2 Will not engage in any unlawful discrimination in the selection of **Subcontractors** on the basis of the owner's race, color, creed, national origin, sex, age, disability, marital status or sexual orientation; and

36.3.3 Will state in all solicitations or advertisements for employees placed by or on behalf of the **Contractor** that all qualified applicants will receive consideration for employment without unlawful discrimination based on race, creed, color, national origin, sex, age, citizens status, disability, marital status, sexual orientation, or that it is an equal employment opportunity employer; and

36.3.4 Will send to each labor organization or representative of workers with which it has a collective bargaining agreement or other contract or memorandum of understanding, written notification of its equal employment opportunity commitments under E.O. 50 and the rules and regulations promulgated thereunder; and

36.3.5 Will furnish, before the award of the **Contract**, all information and reports, including an employment report, that are required by E.O. 50, the rules and regulations promulgated thereunder, and orders of the **City** Department of Business Services, Division of Labor Services (**DLS**) and will permit access to its books, records, and accounts by the **DLS** for the purposes of investigation to ascertain compliance with such rules, regulations, and orders.

36.4 The **Contractor** understands that in the event of its noncompliance with the nondiscrimination clauses of this **Contract** or with any of such rules, regulations, or orders, such noncompliance shall constitute a material breach of this **Contract** and noncompliance with E.O. 50 and the rules and regulations promulgated thereunder. After a hearing held pursuant to the rules of the **DLS**, the Director of the **DLS** may direct the **Commissioner** to impose any or all of the following sanctions:

36.4.1 Disapproval of the **Contractor**; and/or

36.4.2 Suspension or termination of the **Contract**; and/or

36.4.3 Declaring the **Contractor** in default; and/or

36.4.4 In lieu of any of the foregoing sanctions, the Director of the **DLS** may impose an employment program.

In addition to any actions taken under this **Contract**, failure to comply with E.O. 50 and the rules and regulations promulgated thereunder, in one or more instances, may result in a **City Agency** declaring the **Contractor** to be non-responsible in future procurements. The **Contractor** further agrees that it will refrain from entering into any **Contract** or **Contract** modification subject to E.O. 50 and the rules and regulations promulgated thereunder with a **Subcontractor** who is not in compliance with the requirements of E.O. 50 and the rules and regulations promulgated thereunder.

36.5 The **Contractor** specifically agrees, as required by Section 6-123 of the Administrative Code, that:

36.5.1 The **Contractor** will not engage in any unlawful discriminatory practice in violation of Title 8 of the Administrative Code; and

36.5.2 Any failure to comply with this Article 36.5 may subject the **Contractor** to the remedies set forth in Section 6-123 of the Administrative Code, including, where appropriate, sanctions such as withholding of payment, imposition of an employment program, finding the **Contractor** to be in default, cancellation of the **Contract**, or any other sanction or remedy provided by **Law** or **Contract**.

ARTICLE 37. LABOR LAW REQUIREMENTS

37.1 The **Contractor** shall strictly comply with all applicable provisions of the Labor Law, as amended. Such compliance is a material term of this **Contract**.

37.2 The **Contractor** specifically agrees, as required by Labor Law Sections 220 and 220-d, as amended, that:

37.2.1 Hours of **Work**: No laborer, worker, or mechanic in the employ of the **Contractor**, **Subcontractor** or other person doing or contracting to do the whole or a part of the **Work** contemplated by this **Contract** shall be permitted or required to work more than eight (8) hours in any one (1) **Day**, or more than five (5) **Days** in any one (1) week, except as provided in the Labor Law and in cases of extraordinary emergency including fire, flood, or danger to life or property, or in the case of national emergency when so proclaimed by the President of the United States of America.

37.2.2 In situations in which there are not sufficient laborers, workers, and mechanics who may be employed to carry on expeditiously the **Work** contemplated by this **Contract** as a result of such restrictions upon the number of hours and **Days** of labor, and the immediate commencement or prosecution or completion without undue delay of the **Work** is necessary for the preservation of the **Site** and/or for the protection of the life and limb of the persons using the same, such laborers, workers, and mechanics shall be permitted or required to work more than eight (8) hours in any one (1) **Day**; or five (5) **Days** in any one (1) week; provided, however, that upon application of any **Contractor**, the **Commissioner** shall have first certified to the Commissioner of Labor of the State of New York (hereinafter "Commissioner of Labor") that such public **Work** is of an important nature and that a delay in carrying it to completion would result in serious disadvantage to the public; and provided, further, that such Commissioner of Labor shall have determined that such an emergency does in fact exist as provided in Labor Law Section 220.2.

37.2.3 Failure of the **Commissioner** to make such a certification to the Commissioner of Labor shall not entitle the **Contractor** to damages for delay or for any cause whatsoever.

37.2.4 Prevailing Rate of Wages: The wages to be paid for a legal day's **Work** to laborers, workers, or mechanics employed upon the **Work** contemplated by this **Contract** or upon any materials to be used thereon shall not be less than the "prevailing rate of wage" as defined in Labor Law Section 220, and as fixed by the **Comptroller** in the attached Schedule of Wage Rates and in updated schedules thereof. The prevailing wage rates and supplemental benefits to be paid are those in effect at the time the **Work** is being performed.

37.2.5 Requests for interpretation or correction in the Information for Bidders includes all requests for clarification of the classification of trades to be employed in the performance of the **Work** under this **Contract**. In the event that a trade not listed in the **Contract** is in fact employed during the performance of this **Contract**, the **Contractor** shall be required to obtain from the **Agency** the prevailing wage rates and supplementary benefits for the trades used and to complete the performance of this **Contract** at the price at which the **Contract** was awarded.

37.2.6 Minimum Wages: Except for employees whose wage is required to be fixed pursuant to Labor Law Section 220, all persons employed by the **Contractor** and any **Subcontractor** in the manufacture or furnishing of the supplies, materials, or equipment, or the furnishing of work, labor, or services, used in the performance of this **Contract**, shall be paid, without subsequent deduction or rebate unless expressly authorized by **Law**, not less than the sum mandated by **Law**.

37.3 Working Conditions: No part of the **Work**, labor or services shall be performed or rendered by the **Contractor** in any plants, factories, buildings or surroundings or under working conditions which are unsanitary or hazardous or dangerous to the health and safety of employees engaged in the performance of this **Contract**. Compliance with the safety, sanitary, and factory inspection **Laws** of the state in which the **Work** is to be performed shall be prima facie evidence of compliance with this Article 37.3.

37.4 Prevailing Wage Enforcement: The **Contractor** agrees to pay for all costs incurred by the **City** in enforcing prevailing wage requirements, including the cost of any investigation conducted by or on behalf of the **Agency** or the **Comptroller,** where the **City** discovers a failure to comply with any of the requirements of this Article 37 by the **Contractor** or its **Subcontractor(s)**. The **Contractor** also agrees that, should it fail or refuse to pay for any such investigation, the **Agency** is hereby authorized to deduct from a **Contractor's** account an amount equal to the cost of such investigation.

37.4.1 The Labor Law Section 220 and Section 220-d, as amended, provide that this **Contract** shall be forfeited and no sum paid for any **Work** done hereunder on a second conviction for willfully paying less than:

37.4.1(a) The stipulated prevailing wage scale as provided in Labor Law section 220, as amended, or

37.4.1(b) The stipulated minimum hourly wage scale as provided in Labor Law section 220-d, as amended.

37.4.2 For any breach or violation of either working conditions (Article 37.3) or minimum wages (Article 37.2.6) provisions, the party responsible therefor shall be liable to the **City** for liquidated damages, which may be withheld from any amounts due on any contracts with the **City** of such party responsible, or may be recovered in actions brought by the **City**

Corporation Counsel in the name of the **City**, in addition to damages for any other breach of this **Contract**, for a sum equal to the amount of any underpayment of wages due to any employee engaged in the performance of this **Contract**. In addition, the **Commissioner** shall have the right to cancel contracts and enter into other contracts for the completion of the original contract, with or without public letting, and the original **Contractor** shall be liable for any additional cost. All sums withheld or recovered as deductions, rebates, refunds, or underpayment of wages hereunder, shall be held in a special deposit account and shall be paid without interest, on order of the **Comptroller**, directly to the employees who have been paid less than minimum rates of pay as set forth herein and on whose account such sums were withheld or recovered, provided that no claims by employees for such payments shall be entertained unless made within two (2) years from the date of actual notice to the **Contractor** of the withholding or recovery of such sums by the **City**.

37.4.3 A determination by the **Comptroller** that a **Contractor** and/or its **Subcontractor** willfully violated Labor Law Section 220 will be forwarded to the **City's** five District Attorneys for review.

37.4.4 The **Contractor's** or **Subcontractor's** noncompliance with this Article 37.4 and Labor Law Section 220 may result in an unsatisfactory performance evaluation and the **Comptroller** may also find and determine that the **Contractor** or **Subcontractor** willfully violated the New York Labor **Law**.

37.4.4(a) An unsatisfactory performance evaluation for noncompliance with this Article 37.4 may result in a determination that the **Contractor** is a non-responsible bidder on subsequent procurements with the **City** and thus a rejection of a future award of a contract with the **City**, as well as any other sanctions provided for by **Law**.

37.4.4(b) Labor Law Section 220-b, as amended, provides that when two (2) final determinations have been rendered against a **Contractor** or **Subcontractor** within any consecutive six (6) year period determining that such **Contractor** or **Subcontractor** has willfully failed to pay the prevailing rate of wages or to provide supplements in accordance with the Labor Law and this Article 37.4, whether such failures were concurrent or consecutive and whether or not such final determinations concerning separate public works projects are rendered simultaneously, such **Contractor** or **Subcontractor** shall be ineligible to submit a bid on or be awarded any public works contract with the **City** for a period of five (5) years from the second final determination. If the final determination involves the falsification of payroll records or the kickback of wages or supplements, the **Contractor** or **Subcontractor** shall be ineligible to submit a bid on or be awarded any public works contract with the **City** for a period of five (5) years from the first final determination.

37.4.4(c) Labor Law Section 220, as amended, provides that the **Contractor** or **Subcontractor** found to have violated this Article 37.4 may be directed to make payment of wages or supplements including interest found to be due, and the **Contractor** or **Subcontractor** may be directed to make payment of a further sum as a civil penalty in an amount not exceeding twenty-five (25%) percent of the total amount found to be due.

37.5 The **Contractor** and its **Subcontractors** shall within ten (10) **Days** after mailing of a Notice of Award or written order, post in prominent and conspicuous places in each and every plant, factory, building, and structure where employees of the **Contractor** and its **Subcontractors** engaged in the

performance of this **Contract** are employed, notices furnished by the **City**, in relation to prevailing wages and supplements, minimum wages, and other stipulations contained in Sections 220 and 220-h of the Labor Law, and the **Contractor** and its **Subcontractors** shall continue to keep such notices posted in such prominent and conspicuous places until **Final Acceptance** of the supplies, materials, equipment, or **Work**, labor, or services required to be furnished or rendered under this **Contract**.

37.6 The **Contractor** shall strictly comply with all of the provisions of Articles 37.6.1 through 37.6.5, and provide for all workers, laborers or mechanics in its employ, the following:

37.6.1 Notices Posted At **Site**: Post, in a location designated by the **City**, schedules of prevailing wages and supplements for this **Project**, a copy of all re-determinations of such schedules for the **Project**, the Workers' Compensation **Law** Section 51 notice, all other notices required by **Law** to be posted at the **Site**, the **City** notice that this **Project** is a public works project on which each worker is entitled to receive the prevailing wages and supplements for the occupation at which he or she is working, and all other notices which the **City** directs the **Contractor** to post. The **Contractor** shall provide a surface for such notices which is satisfactory to the **City**. The **Contractor** shall maintain and keep current such notices in a legible manner and shall replace any notice or schedule which is damaged, defaced, illegible or removed for any reason. The **Contractor** shall post such notices before commencing any **Work** on the **Site** and shall maintain such notices until all **Work** on the **Site** is complete; and

37.6.2 Daily **Site** Sign-in Sheets: Maintain daily **Site** sign-in sheets, and require that **Subcontractors** maintain daily **Site** sign-in sheets for its employees, which include blank spaces for an employee's name to be both printed and signed, job title, date started and Social Security number, the time the employee began work and the time the employee left work, until **Final Acceptance** of the supplies, materials, equipment, or **Work**, labor, or services to be furnished or rendered under this **Contract** unless exception is granted by the **Comptroller** upon application by the **Agency**. In the alternative, subject to the approval of the **CCPO**, the **Contractor** and **Subcontractor** may maintain an electronic or biometric sign-in system, which provides the information required by this Article 37.6.2; and

37.6.3 Individual Employee Information Notices: Distribute a notice to each worker, laborer or mechanic employed under this **Contract**, in a form provided by the **Agency**, that this **Project** is a public works project on which each worker, laborer or mechanic is entitled to receive the prevailing rate of wages and supplements for the occupation at which he or she is working. If the total cost of the **Work** under this **Contract** is at least two hundred fifty thousand ($250,000) dollars, such notice shall also include a statement that each worker, laborer or mechanic must be certified prior to performing any **Work** as having successfully completed a course in construction safety and health approved by the United States Department of Labor's Occupational Safety and Health Administration that is at least ten (10) hours in duration. Such notice shall be distributed to each worker before he or she starts performing any **Work** of this **Contract** and with the first paycheck after July first of each year. "Worker, laborer or mechanic" includes employees of the **Contractor** and all **Subcontractors** and all employees of suppliers entering the **Site**. At the time of distribution, the **Contractor** shall have each worker, laborer or mechanic sign a statement, in a form provided by the **Agency**, certifying that the worker has received the notice required by this Article 37.6.3, which signed statement shall be maintained with the payroll records required by this **Contract**; and

37.6.3(a) The **Contractor** and each **Subcontractor** shall notify each worker, laborer or mechanic employed under this **Contract** in writing of the prevailing rate of

wages for their particular job classification. Such notification shall be given to every worker, laborer, and mechanic on their first pay stub and with every pay stub thereafter; and

37.6.4 **Site** Laminated Identification Badges: The **Contractor** shall provide laminated identification badges which include a photograph of the worker's, laborer's or mechanic's face and indicate the worker's, laborer's or mechanic's name, trade, employer's name, and employment starting date (month/day/year). Further, the **Contractor** shall require as a condition of employment on the **Site**, that each and every worker, laborer or mechanic wear the laminated identification badge at all times and that it may be seen by any representative of the **City**. The **Commissioner** may grant a written waiver from the requirement that the laminated identification badge include a photograph if the **Contractor** demonstrates that the identity of an individual wearing a laminated identification badge can be easily verified by another method; and

37.6.5 Language Other Than English Used On **Site**: Provide the **ACCO** notice when three (3) or more employees (worker and/or laborer and/or mechanic) on the **Site**, at any time, speak a language other than English. The **ACCO** will then provide the **Contractor** the notices described in Article 37.6.1 in that language or languages as may be required. The **Contractor** is responsible for all distributions under this Article 37; and

37.6.6 Provision of Records: The **Contractor** and **Subcontractor(s)** shall produce within five (5) **Days** on the **Site** of the **Work** and upon a written order of the **Engineer**, the **Commissioner**, the **ACCO**, the **Agency EAO**, or the **Comptroller,** such records as are required to be kept by this Article 37.6; and

37.6.7 The **Contractor** and **Subcontractor(s)** shall pay employees by check or direct deposit. If this **Contract** is for an amount greater than one million ($1,000,000) dollars, checks issued by the **Contractor** to covered employees shall be generated by a payroll service or automated payroll system (an in-house system may be used if approved by the **Agency**). For any subcontract for an amount greater than seven hundred fifty thousand ($750,000) dollars, checks issued by a **Subcontractor** to covered employees shall be generated by a payroll service or automated payroll system (an in-house system may be used if approved by the **Agency**); and

37.6.8 The failure of the **Contractor** or **Subcontractor(s)** to comply with the provisions of Articles 37.6.1 through 37.6.7 may result in the **Commissioner** declaring the **Contractor** in default and/or the withholding of payments otherwise due under the **Contract**.

37.7 The **Contractor** and its **Subcontractors** shall keep such employment and payroll records as are required by Section 220 of the Labor Law. The failure of the **Contractor** or **Subcontractor(s)** to comply with the provisions of this Article 37.7 may result in the **Commissioner** declaring the **Contractor** in default and/or the withholding of payments otherwise due under the **Contract.**

37.8 At the time the **Contractor** makes application for each partial payment and for final payment, the **Contractor** shall submit to the **Commissioner** a written payroll certification, in the form provided by this **Contract**, of compliance with the prevailing wage, minimum wage, and other provisions and stipulations required by Labor Law Section 220 and of compliance with the training requirements of Labor Law Section 220-h set forth in Article 35.2. This certification of compliance shall be a condition precedent to payment and no payment shall be made to the **Contractor** unless and until each such certification shall have been submitted to and received by the **Commissioner**.

37.9 This **Contract** is executed by the **Contractor** with the express warranty and representation that the **Contractor** is not disqualified under the provisions of Section 220 of the Labor Law from the award of the **Contract**.

37.10 Any breach or violation of any of the foregoing shall be deemed a breach or violation of a material provision of this **Contract**, and grounds for cancellation thereof by the **City**.

ARTICLE 38. PAYROLL REPORTS

38.1 The **Contractor** and its **Subcontractor(s)** shall maintain on the **Site** during the performance of the **Work** the original payrolls or transcripts thereof which the **Contractor** and its **Subcontractor(s)** are required to maintain and shall submit such original payrolls or transcripts, subscribed and affirmed by it as true, within thirty (30) **Days** after issuance of its first payroll, and every thirty (30) **Days** thereafter, pursuant to Labor Law Section 220(3-a)(a)(iii). The **Contractor** and **Subcontractor(s)** shall submit such original payrolls or transcripts along with each and every payment requisition. If payment requisitions are not submitted at least once a month, the **Contractor** and its **Subcontractor(s)** shall submit original payrolls and transcripts both along with its payment requisitions and independently of its payment requisitions.

38.2 The **Contractor** shall maintain payrolls or transcripts thereof for six (6) years from the date of completion of the **Work** on this **Contract**. If such payrolls and transcripts are maintained outside of New York City after the completion of the **Work** and their production is required pursuant to this Article 38, the **Contractor** shall produce such records in New York City upon request by the City.

38.3 The **Contractor** and **Subcontractor(s)** shall comply with any written order, direction, or request made by the **Engineer**, the **Commissioner**, the **ACCO**, the **Agency EAO**, the **Agency Labor Law Investigator(s)**, or the **Comptroller**, to provide to the requesting party any of the following information and/or records within five (5) **Days** of such written order, direction, or request:

38.3.1 Such original payrolls or transcripts thereof subscribed and affirmed by it as true and the statements signed by each worker pursuant to this Chapter VIII; and/or

38.3.2 Attendance sheets for each **Day** on which any employee of the **Contractor** and/or any of the **Subcontractor(s)** performed **Work** on the **Site**, which attendance sheet shall be in a form acceptable to the **Agency** and shall provide information acceptable to the **Agency** to identify each such employee; and/or

38.3.3 Any other information to satisfy the **Engineer**, the **Commissioner**, the **ACCO**, the **Agency EAO**, the **Agency Labor Law Investigator(s)** or the **Comptroller**, that this Chapter VIII and the Labor Law, as to the hours of employment and prevailing rates of wages and/or supplemental benefits, are being observed.

38.4 The failure of the **Contractor** or **Subcontractor(s)** to comply with the provisions of Articles 38.1 and/or 38.2 may result in the **Commissioner** declaring the **Contractor** in default and/or the withholding of payments otherwise due under the **Contract**.

ARTICLE 39. DUST HAZARDS

39.1 Should a harmful dust hazard be created in performing the **Work** of this **Contract**, for the elimination of which appliances or methods have been approved by the Board of Standards and Appeals

of the City of New York, such appliances and methods shall be installed, maintained, and effectively operated during the continuance of such harmful dust hazard. Failure to comply with this provision after notice shall make this **Contract** voidable at the sole discretion of the **City**.

CHAPTER IX: PARTIAL AND FINAL PAYMENTS

ARTICLE 40. CONTRACT PRICE

40.1 The **City** shall pay, and the **Contractor** agrees to accept, in full consideration for the **Contractor's** performance of the **Work** subject to the terms and conditions hereof, the lump sum price or unit prices for which this **Contract** was awarded, plus the amount required to be paid for any **Extra Work** ordered by the **Commissioner** under Article 25, less credit for any **Work** omitted pursuant to Article 29.

ARTICLE 41. BID BREAKDOWN ON LUMP SUM

41.1 Within fifteen (15) **Days** after the commencement date specified in the **Notice to Proceed** or **Order to Work**, unless otherwise directed by the **Resident Engineer**, the **Contractor** shall submit to the **Resident Engineer** a breakdown of its bid price, or of lump sums bid for items of the **Contract**, showing the various operations to be performed under the **Contract**, as directed in the progress schedule required under Article 9, and the value of each of such operations, the total of such items to equal the lump sum price bid. Said breakdown must be approved in writing by the **Resident Engineer**.

41.2 No partial payment will be approved until the **Contractor** submits a bid breakdown that is acceptable to the **Resident Engineer**.

41.3 The **Contractor** shall also submit such other information relating to the bid breakdown as directed by the **Resident Engineer**. Thereafter, the breakdown may be used only for checking the **Contractor's** applications for partial payments hereunder, but shall not be binding upon the **City**, the **Commissioner**, or the **Engineer** for any purpose whatsoever.

ARTICLE 42. PARTIAL PAYMENTS

42.1 From time to time as the **Work** progresses satisfactorily, but not more often than once each calendar month (except where the **Commissioner** approves in writing the submission of invoices on a more frequent basis and for invoices relating to **Work** performed pursuant to a change order), the **Contractor** may submit to the **Engineer** a requisition for a partial payment in the prescribed form, which shall contain an estimate of the quantity and the fair value of the **Work** done during the payment period.

42.2 Partial payments may be made for materials, fixtures, and equipment in advance of their actual incorporation in the **Work**, as the **Commissioner** may approve, and upon the terms and conditions set forth in the General Conditions.

42.3 The **Contractor** shall also submit to the **Commissioner** in connection with every application for partial payment a verified statement in the form prescribed by the **Comptroller** setting forth the information required under Labor Law Section 220-a.

42.4 Within thirty (30) **Days** after receipt of a satisfactory payment application, and within sixty (60) **Days** after receipt of a satisfactory payment application in relation to **Work** performed pursuant to a change order, the **Engineer** will prepare and certify, and the **Commissioner** will approve, a voucher for a partial payment in the amount of such approved estimate, less any and all deductions authorized to be made by the **Commissioner** under the terms of this **Contract** or by **Law**.

ARTICLE 43. PROMPT PAYMENT

43.1 The Prompt Payment provisions of the **PPB** Rules in effect at the time of the bid will be applicable to payments made under this **Contract**. The provisions require the payment to the **Contractor** of interest on payments made after the required payment date, except as set forth in the **PPB** Rules.

43.2 The **Contractor** shall submit a proper invoice to receive payment, except where the **Contract** provides that the **Contractor** will be paid at predetermined intervals without having to submit an invoice for each scheduled payment.

43.3 Determination of interest due will be made in accordance with the **PPB** Rules.

43.4 If the **Contractor** is paid interest, the proportionate share(s) of that interest shall be forwarded by the **Contractor** to its **Subcontractor(s)**.

43.5 The **Contractor** shall pay each **Subcontractor** or **Materialman** not later than seven (7) **Days** after receipt of payment out of amounts paid to the **Contractor** by the **City** for **Work** performed by the **Subcontractor** or **Materialman** under this **Contract**.

43.5.1 If **Contractor** fails to make any payment to any **Subcontractor** or **Materialman** within seven (7) **Days** after receipt of payment by the **City** pursuant to this Article 43.5, then the **Contractor** shall pay interest on amounts due to such **Subcontractor** or **Materialman** at the rate of interest in effect on the date such payment is made by the **Contractor** computed in accordance with Section 756-b (1)(b) of the New York General Business Law. Accrual of interest shall commence on the **Day** immediately following the expiration of the seventh **Day** following receipt of payment by the **Contractor** from the **City** and shall end on the date on which payment is made.

43.6 The **Contractor** shall include in each of its subcontracts a provision requiring each **Subcontractor** to make payment to each of its **Subcontractors** or **Materialmen** for **Work** performed under this **Contract** in the same manner and within the same time period set forth above.

ARTICLE 44. SUBSTANTIAL COMPLETION PAYMENT

44.1 The **Contractor** shall submit with the **Substantial Completion** requisition:

44.1.1 A final verified statement of any pending Article 27 disputes in accordance with the **PPB** Rules and this **Contract** and any and all alleged claims against the **City**, in any way connected with or arising out of this **Contract** (including those as to which details may have been furnished pursuant to Articles 11, 27, 28, and 30) setting forth with respect to each such claim the total amount thereof, the various items of labor and materials included therein, and the alleged value of each item; and if the alleged claim be one for delay, the alleged cause of each such delay, the period or periods of time, giving the dates when the

Contractor claims the performance of the **Work** or a particular part thereof was delayed, and an itemized statement and breakdown of the amount claimed for each such delay.

44.1.1(a) With respect to each such claim, the **Commissioner**, the **Comptroller** and, in the event of litigation, the **City** Corporation Counsel shall have the same right to inspect, and to make extracts or copies of, the **Contractor's** books, vouchers, records, etc., as is referred to in Articles 11, 27, 28, and 30. Nothing contained in this Article 44.1.1(a) is intended to or shall relieve the **Contractor** from the obligation of complying strictly with Articles 11, 27, 28, and 30. The **Contractor** is warned that unless such claims are completely set forth as herein required, the **Contractor** upon acceptance of the **Substantial Completion** payment pursuant to this Article 44, will have waived any such claims.

44.1.2 A **Final Approved Punch List**.

44.1.3 Where required, a request for an extension of time to achieve **Substantial Completion** or final extension of time.

44.2 The **Commissioner** shall issue a voucher calling for payment of any part or all of the balance due for **Work** performed under the **Contract**, including monies retained under Article 21, less any and all deductions authorized to be made by the **Commissioner**, under this **Contract** or by **Law**, and less twice the amount the **Commissioner** considers necessary to ensure the completion of the balance of the **Work** by the **Contractor**. Such a payment shall be considered a partial and not a final payment. No **Substantial Completion** payment shall be made under this Article 44 where the **Contractor** failed to complete the **Work** within the time fixed for such completion in the Schedule A of the General Conditions, or within the time to which completion may have been extended, until an extension or extensions of time for the completion of **Work** have been acted upon pursuant to Article 13.

44.3 No further partial payments shall be made to the **Contractor** after **Substantial Completion**, except the **Substantial Completion** payment and payment pursuant to any **Contractor's** requisition that were properly filed with the **Commissioner** prior to the date of **Substantial Completion**; however, the **Commissioner** may grant a waiver for further partial payments after the date of **Substantial Completion** to permit payments for change order **Work** and/or release of retainage and deposits pursuant to Articles 21 and 24. Such waiver shall be in writing.

44.4 The **Contractor** acknowledges that nothing contained in this Article 44 is intended to or shall in any way diminish the force and effect of Article 13.

ARTICLE 45. FINAL PAYMENT

45.1 After completion and **Final Acceptance** of the **Work**, the **Contractor** shall submit all required certificates and documents, together with a requisition for the balance claimed to be due under the **Contract**, less the amount authorized to be retained for maintenance under Article 24. Such submission shall be within 90 days of the date of the **Commissioner's** written determination of **Final Acceptance**, or within such additional time as may be granted by the **Commissioner** in writing. If the **Contractor** fails to submit all required certificates and documents within the time allowed, no payment of the balance claimed shall be made to the **Contractor** and the **Contractor** shall be deemed to have forfeited its right to payment of any balance claimed. A verified statement similar to that required in connection with applications for partial payments shall also be submitted to the **Commissioner**.

45.2 Amended Verified Statement of Claims: The **Contractor** shall also submit with the final requisition any amendments to the final verified statement of any pending dispute resolution procedures in accordance with the **PPB** Rules and this **Contract** and any and all alleged claims against the **City**, in any way connected with or arising out of this **Contract** (including those as to which details may have been furnished pursuant to Articles 11, 27, 28, and 30) that have occurred subsequent to **Substantial Completion**, setting forth with respect to each such claim the total amount thereof, the various items of labor and materials included therein, and the alleged value of each such item; and if the alleged claim be one for delay, the alleged cause of each such delay, the period or periods of time, giving the dates when the **Contractor** claims the performance of the **Work** or a particular part thereof was delayed, and an itemized statement and breakdown of the amount claimed for each such delay. With reference to each such claim, the **Commissioner**, the **Comptroller** and, in the event of litigation, the **City** Corporation Counsel shall have the same right to inspect, and to make extracts or copies of, the **Contractor's** books, vouchers, records, etc., as is referred to in Articles 11, 27, 28, and 30. Nothing contained in this Article 45.2, is intended to or shall relieve the **Contractor** from the obligation of complying strictly with Articles 11, 27, 28, and 30. The **Contractor** is warned that unless such claims are completely set forth as herein required, the **Contractor**, upon acceptance of the Final Payment pursuant to Article 46, will have waived any such claims.

45.3 Preparation of Final Voucher: Upon determining the balance due hereunder other than on account of claims, the **Engineer** will prepare and certify, for the Commissioner's approval, a voucher for final payment in that amount less any and all deductions authorized to be made by the **Commissioner** under this **Contract** or by **Law**. In the case of a lump sum **Contract**, the **Commissioner** shall certify the voucher for final payment within thirty (30) **Days** from the date of completion and acceptance of the **Work**, provided all requests for extensions of time have been acted upon.

45.3.1 All prior certificates and vouchers upon which partial payments were made, being merely estimates made to enable the **Contractor** to prosecute the **Work** more advantageously, shall be subject to correction in the final voucher, and the certification of the **Engineer** thereon and the approval of the **Commissioner** thereof, shall be conditions precedent to the right of the **Contractor** to receive any money hereunder. Such final voucher shall be binding and conclusive upon the **Contractor**.

45.3.2 Payment pursuant to such final voucher, less any deductions authorized to be made by the **Commissioner** under this **Contract** or by **Law**, shall constitute the final payment, and shall be made by the **Comptroller** within thirty (30) **Days** after the filing of such voucher in his/her office.

45.4 The **Contractor** acknowledges that nothing contained in this Article 45 is intended to or shall in any way diminish the force and effect of Article 13.

ARTICLE 46. ACCEPTANCE OF FINAL PAYMENT

46.1 The acceptance by the **Contractor**, or by anyone claiming by or through it, of the final payment, whether such payment be made pursuant to any judgment of any court, or otherwise, shall constitute and operate as a release of the **City** from any and all claims of and liability to the **Contractor** for anything heretofore done or furnished for the **Contractor** relating to or arising out of this **Contract** and the **Work** done hereunder, and for any prior act, neglect or default on the part of the **City** or any of its officials, agents or employees, excepting only a claim against the **City** for the amounts deducted or retained in accordance with the terms and provisions of this **Contract** or by **Law**, and excepting any claims, not otherwise waived, or any pending dispute resolution procedures which are contained in the

verified statement filed with the **Contractor's** substantial and final requisitions pursuant to Articles 44 and 45.

46.2 The **Contractor** is warned that the execution by it of a release, in connection with the acceptance of the final payment, containing language purporting to reserve claims other than those herein specifically excepted from the operation of this Article 46, or those for amounts deducted by the **Commissioner** from the final requisition or from the final payment as certified by the **Engineer** and approved by the **Commissioner**, shall not be effective to reserve such claims, anything stated to the **Contractor** orally or in writing by any official, agent or employee of the **City** to the contrary notwithstanding.

46.3 Should the **Contractor** refuse to accept the final payment as tendered by the **Comptroller**, it shall constitute a waiver of any right to interest thereon.

46.4 The **Contractor**, however, shall not be barred by this Article 46 from commencing an action for breach of **Contract** to the extent permitted by **Law** and by the terms of the **Contract** for any claims that are contained in the verified statement filed with the **Contractor's** substantial and final requisitions pursuant to Articles 44 and 45 or that arose after submission of the final payment requisition, provided that a detailed and verified statement of claim is served upon the contracting **Agency** and **Comptroller** not later than forty (40) **Days** after the making of such final payment by electronic funds transfer (EFT) or the mailing of such final payment. The statement shall specify the items upon which the claim will be based and any such claim shall be limited to such items.

ARTICLE 47. APPROVAL BY PUBLIC DESIGN COMMISSION

47.1 All works of art, including paintings, mural decorations, stained glass, statues, bas-reliefs, and other sculptures, monuments, fountains, arches, and other structures of a permanent character intended for ornament or commemoration, and every design of the same to be used in the performance of this **Contract**, and the design of all bridges, approaches, buildings, gates, fences, lamps, or structures to be erected, pursuant to the terms of this **Contract**, shall be submitted to the Art Commission, d/b/a the Public Design Commission of the City of New York, and shall be approved by the Public Design Commission prior to the erection or placing in position of the same. The final payment shall not become due or payable under this **Contract** unless and until the Public Design Commission shall certify that the design for the **Work** herein contracted for has been approved by the said Public Design Commission, and that the same has been executed in substantial accordance with the design so approved, pursuant to the provisions of Chapter 37, Section 854 of the **City** Charter, as amended.

CHAPTER X: CONTRACTOR'S DEFAULT

ARTICLE 48. COMMISSIONER'S RIGHT TO DECLARE CONTRACTOR IN DEFAULT

48.1 In addition to those instances specifically referred to in other Articles herein, the **Commissioner** shall have the right to declare the **Contractor** in default of this **Contract** if:

48.1.1 The **Contractor** fails to commence **Work** when notified to do so by the **Commissioner**; or if

48.1.2 The **Contractor** shall abandon the **Work**; or if

48.1.3 The **Contractor** shall refuse to proceed with the **Work** when and as directed by the **Commissioner**; or if

48.1.4 The **Contractor** shall, without just cause, reduce its working force to a number which, if maintained, would be insufficient, in the opinion of the **Commissioner**, to complete the **Work** in accordance with the progress schedule; or if

48.1.5 The **Contractor** shall fail or refuse to increase sufficiently such working force when ordered to do so by the **Commissioner**; or if

48.1.6 The **Contractor** shall sublet, assign, transfer, convert or otherwise dispose of this **Contract** other than as herein specified; or sell or assign a majority interest in the **Contractor**; or if

48.1.7 The **Contractor** fails to secure and maintain all required insurance; or if

48.1.8 A receiver or receivers are appointed to take charge of the **Contractor's** property or affairs; or if

48.1.9 The **Commissioner** shall be of the opinion that the **Contractor** is or has been unnecessarily or unreasonably or willfully delaying the performance and completion of the **Work**, or the award of necessary subcontracts, or the placing of necessary material and equipment orders; or if

48.1.10 The **Commissioner** shall be of the opinion that the **Contractor** is or has been willfully or in bad faith violating any of the provisions of this **Contract**; or if

48.1.11 The **Commissioner** shall be of the opinion that the **Work** cannot be completed within the time herein provided therefor or within the time to which such completion may have been extended; provided, however, that the impossibility of timely completion is, in the **Commissioner's** opinion, attributable to conditions within the **Contractor's** control; or if

48.1.12 The **Work** is not completed within the time herein provided therefor or within the time to which the **Contractor** may be entitled to have such completion extended; or if

48.1.13 Any statement or representation of the **Contractor** in the **Contract** or in any document submitted by the **Contractor** with respect to the **Work**, the **Project**, or the **Contract** (or for purposes of securing the **Contract**) was untrue or incorrect when made; or if

48.1.14 The **Contractor** or any of its officers, directors, partners, five (5%) percent shareholders, principals, or other persons substantially involved in its activities, commits any of the acts or omissions specified as the grounds for debarment in the **PPB** Rules.

48.2 Before the **Commissioner** shall exercise his/her right to declare the **Contractor** in default, the **Commissioner** shall give the **Contractor** an opportunity to be heard, upon not less than two (2) **Days'** notice.

ARTICLE 49. EXERCISE OF THE RIGHT TO DECLARE DEFAULT

49.1 The right to declare the **Contractor** in default for any of the grounds specified or referred to in Article 48 shall be exercised by sending the **Contractor** a notice, signed by the **Commissioner**, setting forth the ground or grounds upon which such default is declared (hereinafter referred to as a "Notice of Default").

49.2 The **Commissioner's** determination that the **Contractor** is in default shall be conclusive, final, and binding on the parties and such a finding shall preclude the **Contractor** from commencing a plenary action for any damages relating to the **Contract**. If the **Contractor** protests the determination of the **Commissioner**, the **Contractor** may commence an action in a court of competent jurisdiction of the State of New York under Article 78 of the New York Civil Practice Law and Rules.

ARTICLE 50. QUITTING THE SITE

50.1 Upon receipt of such notice the **Contractor** shall immediately discontinue all further operations under this **Contract** and shall immediately quit the **Site**, leaving untouched all plant, materials, equipment, tools, and supplies then on the **Site**.

ARTICLE 51. COMPLETION OF THE WORK

51.1 The **Commissioner**, after declaring the **Contractor** in default, may then have the **Work** completed by such means and in such manner, by contract with or without public letting, or otherwise, as he/she may deem advisable, utilizing for such purpose such of the **Contractor's** plant, materials, equipment, tools, and supplies remaining on the **Site**, and also such **Subcontractors**, as he/she may deem advisable.

51.2 After such completion, the **Commissioner** shall make a certificate stating the expense incurred in such completion, which shall include the cost of re-letting and also the total amount of liquidated damages (at the rate provided for in the **Contract**) from the date when the **Work** should have been completed by the **Contractor** in accordance with the terms hereof to the date of actual completion of the **Work**. Such certificate shall be binding and conclusive upon the **Contractor**, its sureties, and any person claiming under the **Contractor**, as to the amount thereof.

51.3 The expense of such completion, including any and all related and incidental costs, as so certified by the **Commissioner**, and any liquidated damages assessed against the **Contractor**, shall be charged against and deducted out of monies which are earned by the **Contractor** prior to the date of default. Should the expense of such completion, as certified by the **Commissioner**, exceed the total sum which would have been payable under the **Contract** if it had been completed by the **Contractor**, any excess shall be paid by the **Contractor**.

ARTICLE 52. PARTIAL DEFAULT

52.1 In case the **Commissioner** shall declare the **Contractor** in default as to a part of the **Work** only, the **Contractor** shall discontinue such part, shall continue performing the remainder of the **Work** in strict conformity with the terms of this **Contract**, and shall in no way hinder or interfere with any **Other Contractor(s)** or persons whom the **Commissioner** may engage to complete the **Work** as to which the **Contractor** was declared in default.

52.2 The provisions of this Chapter relating to declaring the **Contractor** in default as to the entire **Work** shall be equally applicable to a declaration of partial default, except that the **Commissioner** shall be entitled to utilize for completion of the part of the **Work** as to which the **Contractor** was declared in default only such plant, materials, equipment, tools, and supplies as had been previously used by the **Contractor** on such part.

ARTICLE 53. PERFORMANCE OF UNCOMPLETED WORK

53.1 In completing the whole or any part of the **Work** under the provisions of this Chapter X, the **Commissioner** shall have the power to depart from or change or vary the terms and provisions of this **Contract**, provided, however, that such departure, change or variation is made for the purpose of reducing the time or expense of such completion. Such departure, change or variation, even to the extent of accepting a lesser or different performance, shall not affect the conclusiveness of the **Commissioner's** certificate of the cost of completion referred to in Article 51, nor shall it constitute a defense to an action to recover the amount by which such certificate exceeds the amount which would have been payable to the **Contractor** hereunder but for its default.

ARTICLE 54. OTHER REMEDIES

54.1 In addition to the right to declare the **Contractor** in default pursuant to this Chapter X, the **Commissioner** shall have the absolute right, in his/her sole discretion and without a hearing, to complete or cause to be completed in the same manner as described in Articles 51 and 53, any or all unsatisfactory or uncompleted punch list **Work** that remains after the completion date specified in the **Final Approved Punch List**. A written notice of the exercise of this right shall be sent to the **Contractor** who shall immediately quit the **Site** in accordance with the provisions of Article 50.

54.2 The expense of completion permitted under Article 54.1, including any and all related and incidental costs, as so certified by the **Commissioner**, shall be charged against and deducted out of monies which have been earned by the **Contractor** prior to the date of the exercise of the right set forth in Article 54.1; the balance of such monies, if any, subject to the other provisions of this **Contract**, to be paid to the **Contractor** without interest after such completion. Should the expense of such completion, as certified by the **Commissioner**, exceed the total sum which would have been payable under the **Contract** if it had been completed by the **Contractor**, any excess shall be paid by the **Contractor**.

54.3 The previous provisions of this Chapter X shall be in addition to any and all other remedies available under **Law** or in equity.

54.4 The exercise by the **City** of any remedy set forth herein shall not be deemed a waiver by the **City** of any other legal or equitable remedy contained in this **Contract** or provided under **Law**.

CHAPTER XI: MISCELLANEOUS PROVISIONS

ARTICLE 55. CONTRACTOR'S WARRANTIES

55.1 In consideration of, and to induce, the award of this **Contract** to the **Contractor**, the **Contractor** represents and warrants:

55.1.1 That it is financially solvent, sufficiently experienced and competent to perform the **Work**; and

55.1.2 That the facts stated in its bid and the information given by it pursuant to the Information for Bidders is true and correct in all respects; and

55.1.3 That it has read and complied with all requirements set forth in the **Contract**.

ARTICLE 56. CLAIMS AND ACTIONS THEREON

56.1 Any claim, that is not subject to dispute resolution under the **PPB** Rules or this **Contract**, against the **City** for damages for breach of **Contract** shall not be made or asserted in any action, unless the **Contractor** shall have strictly complied with all requirements relating to the giving of notice and of information with respect to such claims, as herein before provided.

56.2 Nor shall any action be instituted or maintained on any such claims unless such action is commenced within six (6) months after **Substantial Completion**; except that:

56.2.1 Any claims arising out of events occurring after **Substantial Completion** and before **Final Acceptance** of the **Work** shall be asserted within six (6) months of **Final Acceptance** of the **Work**;

56.2.2 If the **Commissioner** exercises his/her right to complete or cause to complete any or all unsatisfactory or uncompleted punch list **Work** that remains after the completion date specified in the **Final Approved Punch List** pursuant to Article 54, any such action shall be commenced within six (6) months from the date the **Commissioner** notifies the **Contractor** in writing that he/she has exercised such right. Any claims for monies deducted, retained or withheld under the provisions of this **Contract** shall be asserted within six (6) months after the date when such monies otherwise become due and payable hereunder; and

56.2.3 If the **Commissioner** exercises his/her right to terminate the **Contract** pursuant to Article 64, any such action shall be commenced within six (6) months of the date the **Commissioner** exercises said right.

ARTICLE 57. INFRINGEMENT

57.1 The **Contractor** shall be solely responsible for and shall defend, indemnify, and hold the **City** harmless from any and all claims (even if the allegations of the lawsuit are without merit) and judgments for damages and from costs and expenses to which the **City** may be subject to or which it may suffer or incur allegedly arising out of or in connection with any infringement by the **Contractor** of any copyright, trade secrets, trademark or patent rights or any other property or personal right of any third party by the **Contractor** and/or its **Subcontractors** in the performance or completion of the **Work**. Insofar as the facts or **Law** relating to any claim would preclude the **City** from being completely indemnified by the **Contractor**, the **City** shall be partially indemnified by the **Contractor** to the fullest extent permitted by **Law**.

ARTICLE 58. NO CLAIM AGAINST OFFICIALS, AGENTS OR EMPLOYEES

58.1 No claim whatsoever shall be made by the **Contractor** against any official, agent or employee of the **City** for, or on account of, anything done or omitted to be done in connection with this **Contract**.

ARTICLE 59. SERVICE OF NOTICES

59.1 The **Contractor** hereby designates the business address, fax number, and email address specified in its bid, as the place where all notices, directions or other communications to the **Contractor** may be delivered, or to which they may be mailed. Any notice, direction, or communication from either party to the other shall be in writing and shall be deemed to have been given when (i) delivered personally; (ii) sent by certified mail, return receipt requested; (iii) delivered by overnight or same day courier service in a properly addressed envelope with confirmation; or (iv) sent by fax or email and, unless receipt of the fax or e-mail is acknowledged by the recipient by fax or e-mail, deposited in a post office box regularly maintained by the United States Postal Service in a properly addressed, postage pre-paid envelope.

59.2 **Contractor's** notice address, email address, or fax number may be changed at any time by an instrument in writing, executed and acknowledged by the **Contractor**, and delivered to the **Commissioner**.

59.3 Nothing herein contained shall, however, be deemed to preclude or render inoperative the service of any notice, direction or other communication upon the **Contractor** personally, or, if the **Contractor** is a corporation, upon any officer thereof.

ARTICLE 60. UNLAWFUL PROVISIONS DEEMED STRICKEN FROM CONTRACT

60.1 If this **Contract** contains any unlawful provision not an essential part of the **Contract** and which shall not appear to have been a controlling or material inducement to the making thereof, the same shall be deemed of no effect and shall, upon notice by either party, be deemed stricken from the **Contract** without affecting the binding force of the remainder.

ARTICLE 61. ALL LEGAL PROVISIONS DEEMED INCLUDED

61.1 It is the intent and understanding of the parties to this **Contract** that each and every provision of **Law** required to be inserted in this **Contract** shall be and is inserted herein. Furthermore, it is hereby stipulated that every such provision is to be deemed to be inserted herein, and if, through mistake or otherwise, any such provision is not inserted, or is not inserted in correct form, then this **Contract** shall forthwith upon the application of either party be amended by such insertion so as to comply strictly with the **Law** and without prejudice to the rights of either party hereunder.

ARTICLE 62. TAX EXEMPTION

62.1 The **City** is exempt from payment of Federal, State, and local taxes, including sales and compensating use taxes of the State of New York and its cities and counties on all tangible personal property sold to the **City** pursuant to the provisions of this **Contract**. These taxes are not to be included in bids. However, this exemption does not apply to tools, machinery, equipment or other property leased by or to the **Contractor**, **Subcontractor** or **Materialman** or to tangible personal property which, even

though it is consumed, is not incorporated into the completed **Work** (consumable supplies) and tangible personal property that the **Contractor** is required to remove from the **Site** during or upon completion of the **Work**. The **Contractor** and its **Subcontractors** and **Materialmen** shall be responsible for and pay any and all applicable taxes, including sales and compensating use taxes, on such leased tools, machinery, equipment or other property and upon all such consumable supplies and tangible personal property that the **Contractor** is required to remove from the **Site** during or upon completion of the **Work**.

62.2 The **Contractor** agrees to sell and the **City** agrees to purchase all tangible personal property, other than consumable supplies and other tangible personal property that the **Contractor** is required to remove from the **Site** during or upon completion of the **Work**, that is required, necessary or proper for or incidental to the construction of the **Project** covered by this **Contract**. The sum paid under this **Contract** for such tangible personal property shall be in full payment and consideration for the sale of such tangible personal property.

62.2.1 The **Contractor** agrees to construct the **Project** and to perform all **Work**, labor and services rendered, necessary, proper or incidental thereto for the sum shown in the bid for the performance of such **Work**, labor, and services, and the sum so paid pursuant to this **Contract** for such **Work**, labor, and services, shall be in full consideration for the performance by the **Contractor** of all its duties and obligations under this **Contract** in connection with said **Work**, labor, and services.

62.3 20 NYCRR Section 541.3(d) provides that a **Contractor**'s purchases of tangible personal property that is either incorporated into real property owned by a governmental entity or purchased for and sold to a governmental entity are exempt from sales and use tax. The **City** shall not pay sales tax for any such tangible personal property that it purchases from the **Contractor** pursuant to the **Contract.** With respect to such tangible personal property, the **Contractor**, at the request of the **City**, shall furnish to the **City** such bills of sale and other instruments as may be required by the **City**, properly executed, acknowledged and delivered assuring to the **City** title to such tangible personal property, free of liens and/or encumbrances, and the **Contractor** shall mark or otherwise identify all such tangible personal property as the property of the **City**.

62.4 Title to all tangible personal property to be sold by the **Contractor** to the **City** pursuant to the provisions of the **Contract** shall immediately vest in and become the sole property of the **City** upon delivery of such tangible personal property to the **Site**. Notwithstanding such transfer of title, the **Contractor** shall have the full and continuing responsibility to install such tangible personal property in accordance with the provisions of this **Contract**, protect it, maintain it in a proper condition and forthwith repair, replace and make good any damage thereto, theft or disappearance thereof, and furnish additional tangible personal property in place of any that may be lost, stolen or rendered unusable, without cost to the **City**, until such time as the **Work** covered by the **Contract** is fully accepted by the **City**. Such transfer of title shall in no way affect any of the **Contractor's** obligations hereunder. In the event that, after title has passed to the **City**, any of the tangible personal property is rejected as being defective or otherwise unsatisfactory, title to all such tangible personal property shall be deemed to have been transferred back to the **Contractor**.

62.5 The purchase by **Subcontractors** or **Materialmen** of tangible personal property to be sold hereunder shall be a purchase or procurement for resale to the **Contractor** (either directly or through other **Subcontractors**) and therefore not subject to the aforesaid sales and compensating use taxes, provided that the subcontracts and purchase agreements provide for the resale of such tangible personal property and that such subcontracts and purchase agreements are in a form similar to this **Contract** with respect to the separation of the sale of consumable supplies and tangible personal property that the

Contractor is required to remove from the **Site** during or upon completion of the **Work** from the **Work** and labor, services, and any other matters to be provided, and provided further that the subcontracts and purchase agreements provide separate prices for tangible personal property and all other services and matters. Such separation shall actually be followed in practice, including the separation of payments for tangible personal property from the payments for other **Work** and labor and other things to be provided.

62.6 The **Contractor** and its **Subcontractors** and **Materialmen** shall furnish a **Contractor** Exempt Purchase Certificate to all persons, firms or corporations from which they purchase tangible personal property for the performance of the **Work** covered by this **Contract**.

62.7 In the event any of the provisions of this Article 62 shall be deemed to be in conflict with any other provisions of this **Contract** or create any ambiguity, then the provisions of this Article 62 shall control.

ARTICLE 63. INVESTIGATION(S) CLAUSE

63.1 The parties to this **Contract** agree to cooperate fully and faithfully with any investigation, audit or inquiry conducted by a United States, a State of New York (State) or a **City** governmental agency or authority that is empowered directly or by designation to compel the attendance of witnesses and to examine witnesses under oath, or conducted by the Inspector General of a governmental agency that is a party in interest to the transaction, submitted bid, submitted proposal, contract, lease, permit or license that is the subject of the investigation, audit or inquiry.

63.2 If any person who has been advised that his/her statement, and any information from such statement, will not be used against him/her in any subsequent criminal proceeding refuses to testify before a grand jury or other governmental agency or authority empowered directly or by designation to compel the attendance of witnesses and to examine witnesses under oath concerning the award of or performance under any transaction, agreement, lease, permit, contract, or license entered into with the **City**, the State, or any political subdivision or public authority thereof, or the Port Authority of New York and New Jersey, or any local development corporation within the **City**, or any public benefit corporation organized under the **Laws** of the State of New York, or;

63.3 If any person refuses to testify for a reason other than the assertion of his/her privilege against self incrimination in an investigation, audit or inquiry conducted by a **City** or State governmental agency or authority empowered directly or by designation to compel the attendance of witnesses and to take testimony under oath, or by the Inspector General of the governmental agency that is a party in interest in, and is seeking testimony concerning the award of, or performance under any transaction, agreement, lease, permit, contract, or license entered into with the **City**, the State, or any political subdivision thereof or any local development corporation within the **City**, then;

63.4 The **Commissioner** whose **Agency** is a party in interest to the transaction, submitted bid, submitted proposal, contract, lease, permit, or license shall convene a hearing, upon not less than five (5) **Days**' written notice to the parties involved to determine if any penalties should attach for the failure of a person to testify.

63.5 If any non-governmental party to the hearing requests an adjournment, the **Commissioner** who convened the hearing may, upon granting the adjournment, suspend any contract, lease, permit, or license, pending the final determination pursuant to Article 63.7 without the **City** incurring any penalty or damages for delay or otherwise.

63.6 The penalties which may attach after a final determination by the **Commissioner** may include but shall not exceed:

63.6.1 The disqualification for a period not to exceed five (5) years from the date of an adverse determination for any person, or any entity of which such person was a member at the time the testimony was sought, from submitting bids for, or transacting business with, or entering into or obtaining any contract, lease, permit or license with or from the **City**; and/or

63.6.2 The cancellation or termination of any and all such existing **City** contracts, leases, permits or licenses that the refusal to testify concerns and that have not been assigned as permitted under this **Contract**, nor the proceeds of which pledged, to an unaffiliated and unrelated institutional lender for fair value prior to the issuance of the notice scheduling the hearing, without the **City** incurring any penalty or damages on account of such cancellation or termination; monies lawfully due for goods delivered, work done, rentals, or fees accrued prior to the cancellation or termination shall be paid by the **City**.

63.7 The **Commissioner** shall consider and address in reaching his/her determination and in assessing an appropriate penalty the factors in Articles 63.7.1 and 63.7.2. The **Commissioner** may also consider, if relevant and appropriate, the criteria established in Articles 63.7.3 and 63.7.4, in addition to any other information which may be relevant and appropriate:

63.7.1 The party's good faith endeavors or lack thereof to cooperate fully and faithfully with any governmental investigation or audit, including but not limited to the discipline, discharge, or disassociation of any person failing to testify, the production of accurate and complete books and records, and the forthcoming testimony of all other members, agents, assignees or fiduciaries whose testimony is sought.

63.7.2 The relationship of the person who refused to testify to any entity that is a party to the hearing, including but not limited to, whether the person whose testimony is sought has an ownership interest in the entity and/or the degree of authority and responsibility the person has within the entity.

63.7.3 The nexus of the testimony sought to the subject entity and its contracts, leases, permits or licenses with the **City**.

63.7.4 The effect a penalty may have on an unaffiliated and unrelated party or entity that has a significant interest in an entity subject to penalties under Article 63.6, provided that the party or entity has given actual notice to the **Commissioner** upon the acquisition of the interest, or at the hearing called for in Article 63.4, gives notice and proves that such interest was previously acquired. Under either circumstance the party or entity shall present evidence at the hearing demonstrating the potential adverse impact a penalty will have on such person or entity.

63.8 Definitions:

63.8.1 The term "license" or "permit" as used in this Article 63 shall be defined as a license, permit, franchise or concession not granted as a matter of right.

63.8.2 The term "person" as used in this Article 63 shall be defined as any natural person doing business alone or associated with another person or entity as a partner, director, officer, principal or employee.

63.8.3 The term "entity" as used in this Article 63 shall be defined as any firm, partnership, corporation, association, joint venture, or person that receives monies, benefits, licenses, leases, or permits from or through the **City** or otherwise transacts business with the **City**.

63.8.4 The term "member" as used in this Article 63 shall be defined as any person associated with another person or entity as a partner, director, officer, principal or employee.

63.9 In addition to and notwithstanding any other provision of this **Contract**, the **Commissioner** may in his/her sole discretion terminate this **Contract** upon not less than three (3) **Days'** written notice in the event the **Contractor** fails to promptly report in writing to the **Commissioner** of the Department of Investigations ("DOI") of the **City** any solicitation of money, goods, requests for future employment or other benefit or thing of value, by or on behalf of any employee of the **City** or other person, firm, corporation or entity for any purpose which may be related to the procurement or obtaining of this **Contract** by the **Contractor**, or affecting the performance of this **Contract**.

ARTICLE 64. TERMINATION BY THE CITY

64.1 In addition to termination pursuant to any other article of this **Contract**, the **Commissioner** may, at any time, terminate this **Contract** by written notice to the **Contractor**. In the event of termination, the **Contractor** shall, upon receipt of such notice, unless otherwise directed by the **Commissioner**:

64.1.1 Stop **Work** on the date specified in the notice;

64.1.2 Take such action as may be necessary for the protection and preservation of the **City's** materials and property;

64.1.3 Cancel all cancelable orders for material and equipment;

64.1.4 Assign to the **City** and deliver to the **Site** or another location designated by the **Commissioner**, any non-cancelable orders for material and equipment that is not capable of use except in the performance of this **Contract** and has been specifically fabricated for the sole purpose of this **Contract** and not incorporated in the **Work**;

64.1.5 Take no action which will increase the amounts payable by the **City** under this **Contract**.

64.2 In the event of termination by the **City** pursuant to this Article 64, payment to the **Contractor** shall be in accordance with Articles 64.2.1, 64.2.2 or 64.2.3, to the extent that each respective article applies.

64.2.1 Lump Sum Contracts or Items: On all lump sum **Contracts**, or on lump sum items in a **Contract**, the **City** will pay the **Contractor** the sum of the amounts described in Articles 64.2.1(a) and 64.2.1(b), less all payments previously made pursuant to this **Contract**. On lump sum **Contracts** only, the **City** will also pay the **Contractor** an additional sum as provided in Article 64.2.1(c).

64.2.1(a) For **Work** completed prior to the notice of termination, the **Contractor** shall be paid a pro rata portion of the lump sum bid amount, plus approved change orders, based upon the percent completion of the **Work**, as determined by the

Commissioner. For the purpose of determining the pro rata portion of the lump sum bid amount to which the **Contractor** is entitled, the bid breakdown submitted in accordance with Article 41 shall be considered, but shall not be dispositive. The **Commissioner's** determination hereunder shall be final, binding, and conclusive.

64.2.1(b) For non-cancelable material and equipment that is not capable of use except in the performance of this **Contract** and has been specifically fabricated for the sole purpose of this **Contract**, but not yet incorporated in the **Work**, the **Contractor** shall be paid the lesser of the following, less salvage value:

64.2.1(b)(i) The Direct Cost, as defined in Article 64.2.4; or

64.2.1(b)(ii) The fair and reasonable value, if less than Direct Cost, of such material and equipment, plus necessary and reasonable delivery costs.

64.2.1(b)(iii) In addition, the **Contractor** shall be paid five (5%) percent of the amount described in Article 64.2.1(b)(i) or Article 64.2.1(b)(ii), whichever applies.

64.2.1(c) Except as otherwise provided in Article 64.2.1(d), on all lump sum **Contracts**, the **Contractor** shall be paid the percentage indicated below applied to the difference between the total lump sum bid amount and the total of all payments made prior to the notice of termination plus all payments allowed pursuant to Articles 64.2.1(a) and 64.2.1(b):

64.2.1(c)(i) Five (5%) percent of the first five million ($5,000,000) dollars; and

64.2.1(c)(ii) Three (3%) percent of any amount between five million ($5,000,000) dollars and fifteen million ($15,000,000) dollars; plus

64.2.1(c)(iii) One (1%) percent of any amount over fifteen million ($15,000,000) dollars.

64.2.1(d) In the event the **City** terminates a lump sum **Contract** pursuant to this Article 64 within ninety (90) **Days** after registration of the **Contract** with the **Comptroller**, the **Contractor** shall be paid one (1%) percent of the difference between the lump sum bid amount and the total of all payments made pursuant to this Article 64.2.

64.2.2 Unit Price Contracts or Items: On all unit price **Contracts**, or on unit price items in a **Contract**, the **City** will pay the **Contractor** the sum of the amounts described in Articles 64.2.2(a) and 64.2.2(b), less all payments previously made pursuant to this **Contract**:

64.2.2(a) For all completed units, the unit price stated in the **Contract**, and

64.2.2(b) For units that have been ordered but are only partially completed, the **Contractor** will be paid:

64.2.2(b)(i) A pro rata portion of the unit price stated in the **Contract** based upon the percent completion of the unit and

64.2.2(b)(ii) For non-cancelable material and equipment, payment will be made pursuant to Article 64.2.1(b).

64.2.3 Time and Materials Contracts or Items Based on Time and Material Records: On all **Contracts** or items in a **Contract** where payment for the **Work** is based on time and material records, the **Contractor** shall be paid in accordance with Article 26, less all payments previously made pursuant to this **Contract**.

64.2.4 Direct Costs: Direct Costs as used in this Article 64.2 shall mean:

64.2.4(a) The actual purchase price of material and equipment, plus necessary and reasonable delivery costs,

64.2.4(b) The actual cost of labor involved in construction and installation at the **Site**, and

64.2.4(c) The actual cost of necessary bonds and insurance purchased pursuant to requirements of this **Contract** less any amounts that have been or should be refunded by the **Contractor's** sureties or insurance carriers.

64.2.4(d) Direct Costs shall not include overhead.

64.3 In no event shall any payments under this Article 64 exceed the **Contract** price for such items.

64.4 All payments pursuant to Article 64 shall be in the nature of liquidated damages and shall be accepted by the **Contractor** in full satisfaction of all claims against the **City**.

64.5 The **City** may deduct or set off against any sums due and payable pursuant to this Article 64, any deductions authorized by this **Contract** or by **Law** (including but not limited to liquidated damages) and any claims it may have against the **Contractor**. The **City's** exercise of the right to terminate the **Contract** pursuant to this Article 64 shall not impair or otherwise effect the **City's** right to assert any claims it may have against the **Contractor** in a plenary action.

64.6 Where the **Work** covered by the **Contract** has been substantially completed, as determined in writing by the **Commissioner**, termination of the **Work** shall be handled as an omission of **Work** pursuant to Articles 29 and 33, in which case a change order will be issued to reflect an appropriate reduction in the **Contract** sum, or if the amount is determined after final payment, such amount shall be paid by the **Contractor**.

ARTICLE 65. CHOICE OF LAW, CONSENT TO JURISDICTION AND VENUE

65.1 This **Contract** shall be deemed to be executed in the **City** regardless of the domicile of the **Contractor**, and shall be governed by and construed in accordance with the **Laws** of the State of New York and the **Laws** of the United States, where applicable.

65.2 The parties agree that any and all claims asserted against the **City** arising under this **Contract** or related thereto shall be heard and determined in the courts of the State of New York ("New York State Courts") located in the **City** and County of New York. To effect this **Contract** and intent, the **Contractor** agrees:

65.2.1 If the **City** initiates any action against the **Contractor** in Federal court or in a New York State Court, service of process may be made on the **Contractor** either in person, wherever such **Contractor** may be found, or by registered mail addressed to the **Contractor** at its address as set forth in this **Contract**, or to such other address as the **Contractor** may provide to the **City** in writing; and

65.2.2 With respect to any action between the **City** and the **Contractor** in a New York State Court, the **Contractor** hereby expressly waives and relinquishes any rights it might otherwise have:

65.2.2(a) To move to dismiss on grounds of forum non conveniens;

65.2.2(b) To remove to Federal Court; and

65.2.2(c) To move for a change of venue to a New York State Court outside New York County.

65.2.3 With respect to any action brought by the **City** against the **Contractor** in a Federal Court located in the **City**, the **Contractor** expressly waives and relinquishes any right it might otherwise have to move to transfer the action to a Federal Court outside the **City**.

65.2.4 If the **Contractor** commences any action against the **City** in a court located other than in the **City** and County of New York, upon request of the **City**, the **Contractor** shall either consent to a transfer of the action to a New York State Court of competent jurisdiction located in the **City** and County of New York or, if the Court where the action is initially brought will not or cannot transfer the action, the **Contractor** shall consent to dismiss such action without prejudice and may thereafter reinstate the action in a New York State Court of competent jurisdiction in New York County.

65.3 If any provision(s) of this Article 65 is held unenforceable for any reason, each and all other provision(s) shall nevertheless remain in full force and effect.

ARTICLE 66. PARTICIPATION IN AN INTERNATIONAL BOYCOTT

66.1 The **Contractor** agrees that neither the **Contractor** nor any substantially owned affiliated company is participating or shall participate in an international boycott in violation of the provisions of the Federal Export Administration Act of 1979, as amended, or the regulations of the United States Department of Commerce (Commerce Department) promulgated thereunder.

66.2 Upon the final determination by the Commerce Department or any other agency of the United States as to, or conviction of the **Contractor** or a substantially-owned affiliated company thereof for participation in an international boycott in violation of the provisions of the Export Administration Act of 1979, as amended, or the regulations promulgated thereunder, the **Comptroller** may, at his/her option, render forfeit and void this **Contract**.

66.3 The **Contractor** shall comply in all respects, with the provisions of Section 6-114 of the Administrative Code and the rules and regulations issued by the **Comptroller** thereunder.

ARTICLE 67. LOCALLY BASED ENTERPRISE PROGRAM

67.1 This **Contract** is subject to the requirements of Section 6-108.1 of the Administrative Code and regulations promulgated thereunder. No construction contract shall be awarded unless and until these requirements have been complied with in their entirety; however, compliance with this Article 67 is not required if the Agency sets Subcontractor Participation Goals for Minority- and Women-Owned Business Enterprises (M/WBEs).

67.2 Unless specifically waived by the **Commissioner** with the approval of the Division of Economic and Financial Opportunity of the **City** Department of Business Services, if any portion of the **Contract** is subcontracted, not less than ten (10%) percent of the total dollar amount of the **Contract** shall be awarded to locally based enterprises (LBEs); except that where less than ten (10%) percent of the total dollar amount of the **Contract** is subcontracted, such lesser percentage shall be so awarded.

67.3 The **Contractor** shall not require performance and payment bonds from LBE **Subcontractors**.

67.4 If the **Contractor** has indicated prior to award that no **Work** will be subcontracted, no **Work** shall be subcontracted without the prior approval of the **Commissioner**, which shall be granted only if the **Contractor** makes a good faith effort beginning at least six (6) weeks before the **Work** is to be performed to obtain LBE **Subcontractors** to perform the **Work**.

67.5 If the **Contractor** has not identified sufficient LBE **Subcontractors** prior to award, it shall sign a letter of compliance stating that it complies with Section 6-108.1 of the Administrative Code, recognizes that achieving the LBE requirement is a condition of its **Contract**, and shall submit documentation demonstrating its good faith efforts to obtain LBEs. After award, the **Contractor** shall begin to solicit LBE's to perform subcontracted **Work** at least six (6) weeks before the date such **Work** is to be performed and shall demonstrate that a good faith effort has been made to obtain LBEs on each subcontract until it meets the required percentage.

67.6 Failure of the **Contractor** to comply with the requirements of Section 6-108.1 of the Administrative Code and the regulations promulgated thereunder shall constitute a material breach of this **Contract**. Remedy for such breach may include the imposition of any or all of the following sanctions:

67.6.1 Reducing the **Contractor's** compensation by an amount equal to the dollar value of the percentage of the LBE subcontracting requirement not complied with;

67.6.2 Declaring the **Contractor** in default;

67.6.3 If the **Contractor** is an LBE, de-certifying and declaring the **Contractor** ineligible to participate in the LBE program for a period of up to three (3) years.

ARTICLE 68. ANTITRUST

68.1 The **Contractor** hereby assigns, sells, and transfers to the **City** all right, title, and interest in and to any claims and causes of action arising under the antitrust **Laws** of New York State or of the United States relating to the particular goods or services purchased or procured by the **City** under this **Contract**.

ARTICLE 69. MacBRIDE PRINCIPLES PROVISIONS

69.1 Notice To All Prospective **Contractors**:

69.1.1 Local Law No. 34 of 1991 became effective on September 10, 1991 and added Section 6-115.1 of the Administrative Code. The local **Law** provides for certain restrictions on **City Contracts** to express the opposition of the people of the **City** to employment discrimination practices in Northern Ireland to promote freedom of work-place opportunity.

69.1.2 Pursuant to Section 6-115.1, prospective **Contractors** for **Contracts** to provide goods or services involving an expenditure of an amount greater than ten thousand ($10,000.) dollars, or for construction involving an amount greater than fifteen thousand ($15,000.) dollars, are asked to sign a rider in which they covenant and represent, as a material condition of their **Contract**, that any business operations in Northern Ireland conducted by the **Contractor** and any individual or legal entity in which the **Contractor** holds a ten (10%) percent or greater ownership interest in the **Contractor** will be conducted in accordance with the MacBride Principles of nondiscrimination in employment.

69.1.3 Prospective **Contractors** are not required to agree to these conditions. However, in the case of **Contracts** let by competitive sealed bidding, whenever the lowest responsible bidder has not agreed to stipulate to the conditions set forth in this notice and another bidder who has agreed to stipulate to such conditions has submitted a bid within five (5%) percent of the lowest responsible bid for a **Contract** to supply goods, services or contraction of comparable quality, the **Agency** shall refer such bids to the Mayor, the Speaker or other officials, as appropriate, who may determine, in accordance with applicable **Law**, that it is in the best interest of the **City** that the **Contract** be awarded to other than the lowest responsible pursuant to Section 313(b)(2) of the **City** Charter.

69.1.4 In the case of **Contracts** let by other than competitive sealed bidding, if a prospective **Contractor** does not agree to these conditions, no **Agency**, elected official or the **City** Council shall award the **Contract** to that bidder unless the **Agency** seeking to use the goods, services or construction certifies in writing that the **Contract** is necessary for the **Agency** to perform its functions and there is no other responsible **Contractor** who will supply goods, services or construction of comparable quality at a comparable price.

69.2 In accordance with Section 6-115.1 of the Administrative Code, the **Contractor** stipulates that such **Contractor** and any individual or legal entity in which the **Contractor** holds a ten (10%) percent or greater ownership interest in the **Contractor** either:

69.2.1 Have no business operations in Northern Ireland, or

69.2.2 Shall take lawful steps in good faith to conduct any business operations they have in Northern Ireland in accordance with the MacBride Principles, and shall permit independent monitoring of their compliance with such principles.

69.3 For purposes of this Article, the following terms shall have the following meanings:

69.3.1 "MacBride Principles" shall mean those principles relating to nondiscrimination in employment and freedom of work-place opportunity which require employers doing business in Northern Ireland to:

69.3.1(a) increase the representation of individuals from under-represented religious groups in the workforce, including managerial, supervisory, administrative, clerical and technical jobs;

69.3.1(b) take steps to promote adequate security for the protection of employees from under-represented religious groups both at the work-place and while traveling to and from **Work**;

69.3.1(c) ban provocative religious or political emblems from the workplace;

69.3.1(d) publicly advertise all job openings and make special recruitment efforts to attract applicants from under-represented religious groups;

69.3.1(e) establish layoff, recall, and termination procedures which do not in practice favor a particular religious group;

69.3.1(f) abolish all job reservations, apprenticeship restrictions and different employment criteria which discriminate on the basis of religion;

69.3.1(g) develop training programs that will prepare substantial numbers of current employees from under-represented religious groups for skilled jobs, including the expansion of existing programs and the creation of new programs to train, upgrade, and improve the skills of workers from under-represented religious groups;

69.3.1(h) establish procedures to asses, identify, and actively recruit employees from under-represented religious groups with potential for further advancement; and

69.3.1(i) appoint a senior management staff member to oversee affirmative action efforts and develop a timetable to ensure their full implementation.

69.4 The **Contractor** agrees that the covenants and representations in Article 69.2 are material conditions to this **Contract**. In the event the **Agency** receives information that the **Contractor** who made the stipulation required by this Article 69 is in violation thereof, the **Agency** shall review such information and give the **Contractor** an opportunity to respond. If the **Agency** finds that a violation has occurred, the **Agency** shall have the right to declare the **Contractor** in default in default and/or terminate this **Contract** for cause and procure supplies, services or **Work** from another source in the manner the **Agency** deems proper. In the event of such termination, the **Contractor** shall pay to the **Agency**, or the **Agency** in its sole discretion may withhold from any amounts otherwise payable to the **Contractor**, the difference between the **Contract** price for the uncompleted portion of this **Contract** and the cost to the **Agency** of completing performance of this **Contract** either itself or by engaging another **Contractor** or **Contractors**. In the case of a requirement **Contract**, the **Contractor** shall be liable for such difference in price for the entire amount of supplies required by the **Agency** for the uncompleted term of **Contractor's Contract**. In the case of a construction **Contract**, the **Agency** shall also have the right to hold the **Contractor** in partial or total default in accordance with the default provisions of this **Contract**, and/or may seek debarment or suspension of the **Contractor**. The rights and remedies of the **Agency** hereunder shall be in addition to, and not in lieu of, any rights and remedies the **Agency** has pursuant to this **Contract** or by operation of **Law**.

ARTICLE 70. ELECTRONIC FILING/NYC DEVELOPMENT HUB

70.1 The **Contractor** shall electronically file all alteration type-2 and alteration type-3 applications via the New York City Development Hub Web site, except applications for the following types of minor alterations: enlargements, curb cuts, legalizations, fire alarms, builders pavement plans, and jobs filed on Landmark Preservation Commission calendared properties. All such filings must be professionally certified. Information about electronic filing via the New York City Development Hub is available on the **City** Department of Buildings Web site at www.nyc.gov/buildings.

ARTICLE 71. PROHIBITION OF TROPICAL HARDWOODS

71.1 Tropical hardwoods, as defined in Section 165 of the New York State Finance Law (Finance Law), shall not be utilized in the performance of this **Contract** except as expressly permitted by Section 165 of the Finance Law.

ARTICLE 72. CONFLICTS OF INTEREST

72.1 Section 2604 of the **City** Charter and other related provisions of the **City** Charter, the Administrative Code, and the Penal Law are applicable under the terms of this **Contract** in relation to conflicts of interest and shall be extended to **Subcontractors** authorized to perform **Work**, labor and services pursuant to this **Contract** and further, it shall be the duty and responsibility of the **Contractor** to so inform its respective **Subcontractors**. Notice is hereby given that, under certain circumstances, penalties may be invoked against the donor as well as the recipient of any form of valuable gift.

ARTICLE 73. MERGER CLAUSE

73.1 The written **Contract** herein, contains all the terms and conditions agreed upon by the parties hereto, and no other agreement, oral or otherwise, regarding the subject matter of this **Contract** shall be deemed to exist or to bind any of the parties hereto, or to vary any of the terms contained herein.

ARTICLE 74. STATEMENT OF WORK

74.1 The **Contractor** shall furnish all labor and materials and perform all **Work** in strict accordance with the **Specifications** and **Addenda** thereto, numbered as shown in Schedule A.

ARTICLE 75. COMPENSATION TO BE PAID TO CONTRACTOR

75.1 The **City** will pay and the **Contractor** will accept in full consideration for the performance of the **Contract**, subject to additions and deductions as provided herein, the total sum shown in Schedule A, this said sum being the amount at which the **Contract** was awarded to the **Contractor** at a public letting thereof, based upon the **Contractor's** bid for the **Contract**.

ARTICLE 76. ELECTRONIC FUNDS TRANSFER

76.1 In accordance with Section 6-107.1 of the Administrative Code, the **Contractor** agrees to accept payments under this **Contract** from the **City** by electronic funds transfer (EFT). An EFT is any

transfer of funds, other than a transaction originated by check, draft or similar paper instrument, which is initiated through an electronic terminal, telephonic instrument or computer or magnetic tape so as to order, instruct or authorize a financial institution to debit or credit an account. Prior to the first payment made under this **Contract**, the **Contractor** shall designate one financial institution or other authorized payment agent and shall complete the attached "EFT Vendor Payment Enrollment Form" in order to provide the Commissioner of the **City** Department of Finance with information necessary for the **Contractor** to receive electronic funds transfer payments through a designated financial institution or authorized payment agent. The crediting of the amount of a payment to the appropriate account on the books of a financial institution or other authorized payment agent designated by the **Contractor** shall constitute full satisfaction by the **City** for the amount of the payment under this **Contract**. The account information supplied by the **Contractor** to facilitate the electronic funds transfer shall remain confidential to the fullest extent provided by **Law**.

76.2 The **Commissioner** may waive the application of the requirements of this Article 76 to payments on contracts entered into pursuant to Section 315 of the **City** Charter. In addition, the Commissioner of the Department of Finance and the Comptroller may jointly issue standards pursuant to which the **Agency** may waive the requirements of this Article 76 for payments in the following circumstances: (i) for individuals or classes of individuals for whom compliance imposes a hardship; (ii) for classifications or types of checks; or (iii) in other circumstances as may be necessary in the interest of the **City**.

ARTICLE 77. RECORDS RETENTION

77.1 The **Contractor** agrees to retain all books, records, and other documents relevant to this **Contract** for six years after the final payment or termination of this **Contract**, whichever is later. **City**, state, and federal auditors and any other persons duly authorized by the **City** shall have full access to and the right to examine any such books, records, and other documents during the retention period.

ARTICLE 78. EXAMINATION AND VIEWING OF SITE, CONSIDERATION OF OTHER SOURCES OF INFORMATION AND CHANGED SITE CONDITIONS

78.1 Pre-Bidding (Investigation) Viewing of Site – Bidders must carefully view and examine the **Site** of the proposed **Work**, as well as its adjacent area, and seek other usual sources of information, for they will be conclusively presumed to have full knowledge of any and all conditions and hazards on, about or above the **Site** relating to or affecting in any way the performance of the **Work** to be done under the **Contract** that were or should have been known by a reasonably prudent bidder. To arrange a date for visiting the **Site**, bidders are to contact the **Agency** contact person specified in the bid documents.

78.2 Should the **Contractor** encounter during the progress of the Work site conditions or environmental hazards at the **Site** materially differing from any shown on the **Contract Drawings** or indicated in the **Specifications** or such conditions or environmental hazards as could not reasonably have been anticipated by the **Contractor**, which conditions or hazards will materially affect the cost of the **Work** to be done under the **Contract**, the attention of the **Commissioner** must be called immediately to such conditions or hazards before they are disturbed. The **Commissioner** shall thereupon promptly investigate the conditions or hazards. If the **Commissioner** finds that they do so materially differ, and that they could not have been reasonably anticipated by the **Contractor**, the **Contract** may be modified with the **Commissioner**'s written approval.

ARTICLE 79. PARTICIPATION BY MINORITY-OWNED AND WOMEN-OWNED BUSINESS ENTERPRISES IN CITY PROCUREMENT

NOTICE TO ALL PROSPECTIVE CONTRACTORS

ARTICLE I. M/WBE PROGRAM

Local Law No. 129 of 2005 added and Local Law 1 of 2013 amended Section 6-129 of the Administrative Code of the City of New York (hereinafter "Section 6-129"). Section 6-129 establishes the program for participation in City procurement ("M/WBE Program") by minority- owned business enterprises ("MBEs") and women-owned business enterprises ("WBEs"), certified in accordance with Section 1304 of the New York City Charter. As stated in Section 6-129, the intent of the program is to address the impact of discrimination on the City's procurement process, and to promote the public interest in avoiding fraud and favoritism in the procurement process, increasing competition for City business, and lowering contract costs. The contract provisions contained herein are pursuant to Section 6-129, and the rules of the Department of Small Business Services ("DSBS") promulgated thereunder.

If this Contract is subject to the M/WBE Program established by Section 6-129, the specific requirements of MBE and/or WBE participation for this Contract are set forth in Schedule B of the Contract (entitled the "M/WBE Utilization Plan"), and are detailed below. The Contractor must comply with all applicable MBE and WBE requirements for this Contract.

All provisions of Section 6-129 are hereby incorporated in the Contract by reference and all terms used herein that are not defined herein shall have the meanings given such terms in Section 6-129. Article I, Part A, below, sets forth provisions related to the participation goals for construction, standard and professional services contracts. Article I, Part B, below, sets forth miscellaneous provisions related to the M/WBE Program.

PART A

PARTICIPATION GOALS FOR CONSTRUCTION, STANDARD AND PROFESSIONAL SERVICES CONTRACTS OR TASK ORDERS

1. The **MBE and/or WBE Participation Goals** established for this Contract or Task Orders issued pursuant to this Contract, ("**Participation Goals**"), as applicable, are set forth on Schedule B, Part I to this Contract (see Page 1, line 1 Total Participation Goals) or will be set forth on Schedule B, Part I to Task Orders issued pursuant to this Contract, as applicable.

The **Participation Goals** represent a percentage of the total dollar value of the Contract or Task Order, as applicable, that may be achieved by awarding subcontracts to firms certified with New York City Department of Small Business Services as MBEs and/or WBEs, and/or by crediting the participation of prime contractors and/or qualified joint ventures as provided in Section 3 below, unless the goals have been waived or modified by Agency in accordance with Section 6-129 and Part A, Sections 10 and 11 below, respectively.

2. If **Participation Goals** have been established for this Contract or Task Orders issued pursuant to this Contract, Contractor agrees or shall agree as a material term of the Contract that Contractor shall be subject to the **Participation Goals**, unless the goals are waived or modified by Agency in accordance with Section 6-129 and Part A, Sections 10 and 11 below, respectively.

3. If **Participation Goals** have been established for this Contract or Task Order issued pursuant to this Contract, a Contractor that is an MBE and/or WBE shall be permitted to count its own participation toward fulfillment of the relevant **Participation Goal**, provided that in accordance with Section 6-129 the value of Contractor's participation shall be determined by subtracting from the total value of the Contract or Task Order, as applicable, any amounts that the Contractor pays to direct subcontractors (as defined in Section 6-129(c)(13)), and provided further that a Contractor that is certified as both an MBE and a WBE may count its own participation either toward the goal for MBEs or the goal for WBEs, but not both.

A Contractor that is a qualified joint venture (as defined in Section 6-129(c)(30)) shall be permitted to count a percentage of its own participation toward fulfillment of the relevant **Participation Goal**. In accordance with Section 6-129, the value of Contractor's participation shall be determined by subtracting from the total value of the Contract or Task Order, as applicable, any amounts that Contractor pays to direct subcontractors, and then multiplying the remainder by the percentage to be applied to total profit to determine the amount to which an MBE or WBE is entitled pursuant to the joint venture agreement, provided that where a participant in a joint venture is certified as both an MBE and a WBE, such amount shall be counted either toward the goal for MBEs or the goal for WBEs, but not both.

4. A. If **Participation Goals** have been established for this Contract, a prospective contractor shall be required to submit with its bid or proposal, as applicable, a completed Schedule B, M/WBE Utilization Plan, Part II (see Pages 2-4) indicating: (a) whether the contractor is an MBE or WBE, or qualified joint venture; (b) the percentage of work it intends to award to direct subcontractors; and (c) in cases where the contractor intends to award direct subcontracts, a description of the type and dollar value of work designated for participation by MBEs and/or WBEs, and the time frames in which such work is scheduled to begin and end. In the event that this M/WBE Utilization Plan indicates that the bidder or proposer, as applicable, does not intend to meet the **Participation Goals**, the bid or proposal, as applicable, shall be deemed non-responsive, unless Agency has granted the bidder or proposer, as applicable, a pre- award waiver of the Participation Goals in accordance with Section 6-129 and Part A, Section 10 below.

B. (i) If this Contract is for a master services agreement or other requirements type contract that will result in the issuance of Task Orders that will be individually registered ("Master Services Agreement") and is subject to M/WBE **Participation Goals**, a prospective contractor shall be required to submit with its bid or proposal, as applicable, a completed Schedule B, M/WBE Participation Requirements for Master Services Agreements That Will Require Individually Registered Task Orders, Part II (page 2) indicating the prospective contractor's certification and required affirmations to make all reasonable good faith efforts to meet participation goals established on each individual Task Order issued pursuant to this Contract, or if a partial waiver is obtained or such goals are modified by the Agency, to meet the modified **Participation Goals** by soliciting and obtaining the participation of certified MBE and/or WBE firms. In the event that the Schedule B indicates that the bidder or proposer, as applicable, does not intend to meet the **Participation Goals** that may be established on Task Orders issued pursuant to this Contract, the bid or proposal, as applicable, shall be deemed nonresponsive.

(ii) **Participation Goals** on a Master Services Agreement will be established for individual Task Orders issued after the Master Services Agreement is awarded. If **Participation Goals** have been established on a Task Order, a contractor shall be required to submit a Schedule B – M/WBE Utilization Plan For Independently Registered Task Orders That Are Issued Pursuant to Master Services Agreements, Part II (see Pages 2-4) indicating: (a) whether the contractor is an MBE or WBE, or qualified joint venture; (b) the percentage of work it intends to award to direct subcontractors; and (c) in cases where the contractor intends to award direct subcontracts, a description of the type and dollar value of work designated for participation by MBEs and/or WBEs, and the time frames in which such work is scheduled to begin and end. The contractor must engage in good faith efforts to meet the **Participation Goals** as established for the Task Order unless Agency has granted the contractor a pre-award waiver of the Participation Goals in accordance with Section 6-129 and Part A, Section 10 below.

C. THE BIDDER/PROPOSER MUST COMPLETE THE SCHEDULE B INCLUDED HEREIN (SCHEDULE B, PART II). A SCHEDULE B SUBMITTED BY THE BIDDER/PROPOSER WHICH DOES NOT INCLUDE THE VENDOR CERTIFICATION AND REQUIRED AFFIRMATIONS (SEE SECTION V OF PART II) WILL BE DEEMED TO BE NON-RESPONSIVE, UNLESS A FULL WAIVER OF THE PARTICIPATION GOALS IS GRANTED (SCHEDULE B, PART III). IN THE EVENT THAT THE CITY DETERMINES THAT THE BIDDER/PROPOSER HAS SUBMITTED A SCHEDULE B WHERE THE VENDOR CERTIFICATION AND REQUIRED AFFIRMATIONS ARE COMPLETED BUT OTHER ASPECTS OF THE SCHEDULE B ARE NOT COMPLETE, OR CONTAIN A COPY OR COMPUTATION ERROR THAT IS AT ODDS WITH THE VENDOR CERTIFICATION AND AFFIRMATIONS, THE BIDDER/PROPOSER WILL BE NOTIFIED BY THE AGENCY AND WILL BE GIVEN FOUR (4) CALENDAR DAYS FROM RECEIPT OF NOTIFICATION TO CURE THE SPECIFIED DEFICIENCIES AND RETURN A COMPLETED SCHEDULE B TO THE AGENCY. FAILURE TO DO SO WILL RESULT IN A DETERMINATION THAT THE BID/PROPOSAL IS NON-RESPONSIVE. RECEIPT OF NOTIFICATION IS DEFINED AS THE DATE NOTICE IS E-MAILED OR FAXED (IF THE BIDDER/PROPOSER HAS PROVIDED AN E-MAIL ADDRESS OR FAX NUMBER), OR NO LATER THAN FIVE (5) CALENDAR DAYS FROM THE DATE OF MAILING OR UPON DELIVERY, IF DELIVERED.

5. Where an **M/WBE** Utilization Plan has been submitted, the Contractor shall, within 30 days of issuance by Agency of a notice to proceed, submit a list of proposed persons or entities to which it intends to award subcontracts within the subsequent 12 months. In the case of multiyear contracts, such list shall also be submitted every year thereafter. The Agency may also require the Contractor to report periodically about the contracts awarded by its direct subcontractors to indirect subcontractors (as defined in Section 6-129(c)(22)). **PLEASE NOTE: If this Contract is a public works project subject to GML §101(5) (i.e., a contract valued at or below $3M for projects in New York City) or if the Contract is subject to a project labor agreement in accordance with Labor Law §222, and the bidder is required to identify at the time of bid submission its intended subcontractors for the Wicks trades (plumbing and gas fitting; steam heating, hot water heating, ventilating and air conditioning (HVAC); and electric wiring), the Contractor must identify all those to which it intends to award construction subcontracts for any portion of the Wicks trade work at the time of bid submission, regardless of what point in the life of the contract such subcontracts will occur. In identifying intended subcontractors in the bid submission, bidders may satisfy any Participation Goals established for this Contract by proposing one or more subcontractors that are MBEs and/or WBEs for any portion of the Wicks trade work.** In the event that the Contractor's selection of a subcontractor is disapproved, the Contractor shall have a reasonable time to propose alternate subcontractors.

6. MBE and WBE firms must be certified by DSBS in order for the Contractor to credit such firms' participation toward the attainment of the **Participation Goals**. Such certification must occur prior to the

firms' commencement of work. A list of MBE and WBE firms may be obtained from the DSBS website at www.nyc.gov/buycertified, by emailing DSBS at buyer@sbs.nyc.gov, by calling (212) 513-6356, or by visiting or writing DSBS at 110 William St., New York, New York, 10038, 7th floor. Eligible firms that have not yet been certified may contact DSBS in order to seek certification by visiting www.nyc.gov/getcertified, emailing MWBE@sbs.nyc.gov, or calling the DSBS certification helpline at (212) 513-6311. A firm that is certified as both an MBE and a WBE may be counted either toward the goal for MBEs or the goal for WBEs, but not both. No credit shall be given for participation by a graduate MBE or graduate WBE, as defined in Section 6-129(c)(20).

7. Where an **M/WBE** Utilization Plan has been submitted, the Contractor shall, with each voucher for payment, and/or periodically as Agency may require, submit statements, certified under penalty of perjury, which shall include, but not be limited to,: the total amount the Contractor paid to its direct subcontractors, and, where applicable pursuant to Section 6-129(j), the total amount direct subcontractors paid to indirect subcontractors; the names, addresses and contact numbers of each MBE or WBE hired as a subcontractor by the Contractor, and, where applicable, hired by any of the Contractor's direct subcontractors; and the dates and amounts paid to each MBE or WBE. The Contractor shall also submit, along with its voucher for final payment: the total amount it paid to subcontractors, and, where applicable pursuant to Section 6-129(j), the total amount its direct subcontractors paid directly to their indirect subcontractors; and a final list, certified under penalty of perjury, which shall include the name, address and contact information of each subcontractor that is an MBE or WBE, the work performed by, and the dates and amounts paid to each.

8. If payments made to, or work performed by, MBEs or WBEs are less than the amount specified in the Contractor's **M/WBE** Utilization Plan, Agency shall take appropriate action, in accordance with Section 6-129 and Article II below, unless the Contractor has obtained a modification of its **M/WBE** Utilization Plan in accordance with Section 6-129 and Part A, Section 11 below.

9. Where an **M/WBE** Utilization Plan has been submitted, and the Contractor requests a change order the value of which exceeds the greater of 10 percent of the Contract or Task Order, as applicable, or $500,000, Agency shall review the scope of work for the Contract or Task Order, as applicable, and the scale and types of work involved in the change order, and determine whether the **Participation Goals** should be modified.

10. Pre-award waiver of the **Participation Goals**. (a) A bidder or proposer, or contractor with respect to a Task Order, may seek a pre-award full or partial waiver of the **Participation Goals** in accordance with Section 6-129, which requests that Agency change one or more **Participation Goals** on the grounds that the **Participation Goals** are unreasonable in light of the availability of certified firms to perform the services required, or by demonstrating that it has legitimate business reasons for proposing a lower level of subcontracting in its M/WBE Utilization Plan.

(b) To apply for a full or partial waiver of the **Participation Goals**, a bidder, proposer, or contractor, as applicable, must complete Part III (Page 5) of Schedule B and submit such request no later than seven (7) calendar days prior to the date and time the bids, proposals, or Task Orders are due, in writing to the Agency by email at poped@ddc.nyc.gov or via facsimile at (718) 391-1886. Bidders, proposers, or contractors, as applicable, who have submitted requests will receive an Agency response by no later than two (2) calendar days prior to the due date for bids, proposals, or Task Orders; provided, however, that if that date would fall on a weekend or holiday, an Agency response will be provided by close-of-business on the business day before such weekend or holiday date.

(c) If the Agency determines that the **Participation Goals** are unreasonable in light of the availability of certified firms to perform the services required, it shall revise the solicitation and extend the deadline for bids and proposals, or revise the Task Order, as applicable.

(d) Agency may grant a full or partial waiver of the **Participation Goals** to a bidder, proposer or contractor, as applicable, who demonstrates—before submission of the bid, proposal or Task Order, as applicable—that it has legitimate business reasons for proposing the level of subcontracting in its **M/WBE** Utilization Plan. In making its determination, Agency shall consider factors that shall include, but not be limited to, whether the bidder, proposer or contractor, as applicable, has the capacity and the bona fide intention to perform the Contract without any subcontracting, or to perform the Contract without awarding the amount of subcontracts represented by the **Participation Goals**. In making such determination, Agency may consider whether the **M/WBE** Utilization Plan is consistent with past subcontracting practices of the bidder, proposer or contractor, as applicable, whether the bidder, proposer or contractor, as applicable, has made efforts to form a joint venture with a certified firm, and whether the bidder, proposer, or contractor, as applicable, has made good faith efforts to identify other portions of the Contract that it intends to subcontract.

11. Modification of **M/WBE** Utilization Plan. (a) A Contractor may request a modification of its **M/WBE** Utilization Plan after award of this Contract. **PLEASE NOTE: If this Contract is a public works project subject to GML §101(5) (i.e., a contract valued at or below $3M for projects in New York City) or if the Contract is subject to a project labor agreement in accordance with Labor Law §222, and the bidder is required to identify at the time of bid submission its intended subcontractors for the Wicks trades (plumbing and gas fitting; steam heating, hot water heating, ventilating and air conditioning (HVAC); and electric wiring), the Contractor may request a Modification of its M/WBE Utilization Plan as part of its bid submission.** The Agency may grant a request for Modification of a Contractor's **M/WBE** Utilization Plan if it determines that the Contractor has established, with appropriate documentary and other evidence, that it made reasonable, good faith efforts to meet the **Participation Goals.** In making such determination, Agency shall consider evidence of the following efforts, as applicable, along with any other relevant factors:

(i) The Contractor advertised opportunities to participate in the Contract, where appropriate, in general circulation media, trade and professional association publications and small business media, and publications of minority and women's business organizations;
(ii) The Contractor provided notice of specific opportunities to participate in the Contract, in a timely manner, to minority and women's business organizations;
(iii) The Contractor sent written notices, by certified mail or facsimile, in a timely manner, to advise MBEs or WBEs that their interest in the Contract was solicited;
(iv) The Contractor made efforts to identify portions of the work that could be substituted for portions originally designated for participation by MBEs and/or WBEs in the M/WBE Utilization Plan, and for which the Contractor claims an inability to retain MBEs or WBEs;
(v) The Contractor held meetings with MBEs and/or WBEs prior to the date their bids or proposals were due, for the purpose of explaining in detail the scope and requirements of the work for which their bids or proposals were solicited;
(vi) The Contractor made efforts to negotiate with MBEs and/or WBEs as relevant to perform specific subcontracts, or act as suppliers or service providers;
(vii) Timely written requests for assistance made by the Contractor to Agency's M/WBE liaison officer and to DSBS;
(viii) Description of how recommendations made by DSBS and Agency were acted upon and an explanation of why action upon such recommendations did not lead to the desired level of participation of MBEs and/or WBEs.

Agency's M/WBE officer shall provide written notice to the Contractor of the determination.

(b) The Agency may modify the **Participation Goals** when the scope of the work has been changed by the Agency in a manner that affects the scale and types of work that the Contractor indicated in its **M/WBE** Utilization Plan would be awarded to subcontractors.

12. If this Contract is for an indefinite quantity of construction, standard or professional services or is a requirements type contract and the Contractor has submitted an **M/WBE** Utilization Plan and has committed to subcontract work to MBEs and/or WBEs in order to meet the **Participation Goals**, the Contractor will not be deemed in violation of the M/WBE Program requirements for this Contract with regard to any work which was intended to be subcontracted to an MBE and/or WBE to the extent that the Agency has determined that such work is not needed.

13. If **Participation Goals** have been established for this Contract or a Task Order issued pursuant to this Contract, at least once annually during the term of the Contract or Task Order, as applicable, Agency shall review the Contractor's progress toward attainment of its M/WBE Utilization Plan, including but not limited to, by reviewing the percentage of work the Contractor has actually awarded to MBE and/or WBE subcontractors and the payments the Contractor made to such subcontractors.

14. If **Participation Goals** have been established for this Contract or a Task Order issued pursuant to this Contract, Agency shall evaluate and assess the Contractor's performance in meeting those goals, and such evaluation and assessment shall become part of the Contractor's overall contract performance evaluation.

PART B: MISCELLANEOUS

1. The Contractor shall take notice that, if this solicitation requires the establishment of an **M/WBE** Utilization Plan, the resulting contract may be audited by DSBS to determine compliance with Section 6-129. See §6-129(e)(10). Furthermore, such resulting contract may also be examined by the City's Comptroller to assess compliance with the **M/WBE** Utilization Plan.

2. Pursuant to DSBS rules, construction contracts that include a requirement for an **M/WBE** Utilization Plan shall not be subject to the law governing Locally Based Enterprises set forth in Section 6-108.1 of the Administrative Code of the City of New York.

3. DSBS is available to assist contractors and potential contractors in determining the availability of MBEs and/or WBEs to participate as subcontractors, and in identifying opportunities that are appropriate for participation by MBEs and/or WBEs in contracts.

4. Prospective contractors are encouraged to enter into qualified joint venture agreements with MBEs and/or WBEs as defined by Section 6-129(c)(30).

5. By submitting a bid or proposal the Contractor hereby acknowledges its understanding of the M/WBE Program requirements set forth herein and the pertinent provisions of Section 6-129, and any rules promulgated thereunder, and if awarded this Contract, the Contractor hereby agrees to comply with the M/WBE Program requirements of this Contract and pertinent provisions of Section 6-129, and any rules promulgated thereunder, all of which shall be deemed to be material terms of this Contract. The Contractor hereby agrees to make all reasonable, good faith efforts to solicit and obtain the participation of MBEs and/or WBEs to meet the required **Participation Goals**.

ARTICLE II. ENFORCEMENT

1. If Agency determines that a bidder or proposer, as applicable, has, in relation to this procurement, violated Section 6-129 or the DSBS rules promulgated pursuant to Section 6-129, Agency may disqualify such bidder or proposer, as applicable, from competing for this Contract and the Agency may revoke such bidder's or proposer's prequalification status, if applicable.

2. Whenever Agency believes that the Contractor or a subcontractor is not in compliance with Section 6-129 or the DSBS rules promulgated pursuant to Section 6-129, or any provision of this Contract that implements Section 6-129, including, but not limited to any **M/WBE** Utilization Plan, Agency shall send a written notice to the Contractor describing the alleged noncompliance and offering the Contractor an opportunity to be heard. Agency shall then conduct an investigation to determine whether such Contractor or subcontractor is in compliance.

3. In the event that the Contractor has been found to have violated Section 6-129, the DSBS rules promulgated pursuant to Section 6-129, or any provision of this Contract that implements Section 6-129, including, but not limited to, any **M/WBE** Utilization Plan, Agency may determine that one of the following actions should be taken:

(a) entering into an agreement with the Contractor allowing the Contractor to cure the violation;
(b) revoking the Contractor's pre-qualification to bid or make proposals for future contracts;
(c) making a finding that the Contractor is in default of the Contract;
(d) terminating the Contract;
(e) declaring the Contractor to be in breach of Contract;
(f) withholding payment or reimbursement;
(g) determining not to renew the Contract;
(h) assessing actual and consequential damages;
(i) assessing liquidated damages or reducing fees, provided that liquidated damages may be based on amounts representing costs of delays in carrying out the purposes of the M/WBE Program, or in meeting the purposes of the Contract, the costs of meeting utilization goals through additional procurements, the administrative costs of investigation and enforcement, or other factors set forth in the Contract;
(j) exercising rights under the Contract to procure goods, services or construction from another contractor and charge the cost of such contract to the Contractor that has been found to be in noncompliance; or
(k) taking any other appropriate remedy.

4. If an **M/WBE** Utilization Plan has been submitted, and pursuant to this Article II, Section 3, the Contractor has been found to have failed to fulfill its **Participation Goals** contained in its **M/WBE** Utilization Plan or the **Participation Goals** as modified by Agency pursuant to Article I, Part A, Section 11, Agency may assess liquidated damages in the amount of ten percent (10%) of the difference between the dollar amount of work required to be awarded to MBE and/or WBE firms to meet the **Participation Goals** and the dollar amount the Contractor actually awarded and paid, and/or credited, to MBE and/or WBE firms. In view of the difficulty of accurately ascertaining the loss which the City will suffer by reason of Contractor's failure to meet the **Participation Goals**, the foregoing amount is hereby fixed and agreed as the liquidated damages that the City will suffer by reason of such failure, and not as a penalty. Agency may deduct and retain out of any monies which may become due under this Contract the amount of any such liquidated damages; and in case the amount which may become due under this Contract shall be less than the amount of liquidated damages suffered by the City, the Contractor shall be liable to pay the difference.

5. Whenever Agency has reason to believe that an MBE and/or WBE is not qualified for certification, or is participating in a contract in a manner that does not serve a commercially useful function (as defined in Section 6-129(c)(8)), or has violated any provision of Section 6- 129, Agency shall notify the Commissioner of DSBS who shall determine whether the certification of such business enterprise should be revoked.

6. Statements made in any instrument submitted to Agency pursuant to Section 6-129 shall be submitted under penalty of perjury and any false or misleading statement or omission shall be grounds for the application of any applicable criminal and/or civil penalties for perjury. The making of a false or fraudulent statement by an MBE and/or WBE in any instrument submitted pursuant to Section 6-129 shall, in addition, be grounds for revocation of its certification.

7. The Contractor's record in implementing its **M/WBE** Utilization Plan shall be a factor in the evaluation of its performance. Whenever Agency determines that a Contractor's compliance with an **M/WBE** Utilization Plan has been unsatisfactory, Agency shall, after consultation with the City Chief Procurement Officer, file an advice of caution form for inclusion in VENDEX as caution data.

IN WITNESS WHEREOF, the Commissioner, on behalf of the City of New York, and the Contractor, have executed this agreement in quadruplicate, two parts of which are to remain with the Commissioner, another to be filed with the Comptroller of the City, and the fourth to be delivered to the Contractor.

THE CITY OF NEW YORK

By: _____
Commissioner

CONTRACTOR: PCT Industries, Corp.

By: _____
(Member of Firm or Officer of Corporation)

Title: President

(Where Contractor is a Corporation, add):
Attest:

_____
Secretary

(Seal)

_____

ACKNOWLEDGEMENT OF PRINCIPAL, IF A CORPORATION

State of New York County of Queens ss:

On this 19th day of June, 2019, before me personally came Richard Perillo to me known who, being by me duly sworn did depose and say that he resides at Mt Vernon New York RP that he is the President of the corporation described in and which executed the foregoing instrument; that he knows the seal of said corporation; that one of the seals affixed to said instrument is such seal; that it was so affixed by order of the directors of said corporation, and that he signed his name thereto by like order.

BRENDA A. BARREIRO
Notary Public, State of New York
No. 01BA6351073
Qualified in Kings County
Commission Expires Nov. 28, 20 20

Notary Public or Commissioner of Deeds

ACKNOWLEDGEMENT OF PRINCIPAL, IF A PARTNERSHIP

State of _____ County of _____ ss:

On this _____ day of _____, _____, before me personally appeared _____ to me known, and known to me to be one of the members of the firm of _____ described in and who executed the foregoing instrument; and he acknowledged to me that he executed the same as and for the act and deed of said firm.

Notary Public or Commissioner of Deeds

ACKNOWLEDGEMENT OF PRINCIPAL, IF AN INDIVIDUAL

State of _____ County of _____ ss:

On this _____ day of _____, _____, before me personally appeared _____ to me known, and known to me to be the person described in and who executed the foregoing instrument; and acknowledged that he executed the same.

Notary Public or Commissioner of Deeds

ACKNOWLEDGEMENT BY COMMISSIONER

State of New York County of Queens ss:

On this 20th day of June, 2019, before me personally came Jamie Torres-Springer to me known, and known to be the Commissioner of the Department of Design and Construction of The City of New York, the person described as such in and who as such executed the foregoing instrument and acknowledged to me that he executed the same as Commissioner for the purposes therein mentioned.

Brenda A Barreiro

Notary Public or Commissioner of Deeds

BRENDA A. BARREIRO
Notary Public, State of New York
No. 01BA6351073
Qualified in Kings County
Commission Expires Nov. 28, 2020

AUTHORITY

MAYOR'S CERTIFICATE NO. CBX DATED
BUDGET DIRECTOR'S CERTIFICATE NO. DATED

APPROPRIATION
COMMISSIONER'S CERTIFICATE

In conformity with the provisions of Section 6-101 of the Administrative Code of the City of New York, it is hereby certified that the estimated cost of the work, materials and supplies required by the within Contract, amounting to

Nineteen Million, One Hundred Twenty-three Thousand, Three Hundred Seventy

Dollars ($ 19,123,370.00)

is chargeable to the fund of the Department of Design and Construction entitled Code

_____

_____

_____
Department of Design and Construction

I hereby certify that the specifications contained herein comply with the terms and conditions of the BUDGET.

_____
Commissioner

COMPTROLLER'S CERTIFICATE

The City of New York_____

Pursuant to the provisions of Section 6-101 of the Administrative Code of the City of New York, I hereby certify that there remains unapplied and unexpended a balance of the above mentioned fund applicable to this Contract sufficient to pay the estimated expense of executing the same viz:

$_____

_____
Comptroller

MAYOR'S CERTIFICATE OR CERTIFICATE OF THE DIRECTOR OF THE BUDGET

Performance Bond #1 (Pages 100 to 103): Use if the total contract price is $5 Million Or Less. Performance Bond #1 has been approved by the U.S. Small Business Administration ("SBA") for participation in its Bond Guarantee Program.

PERFORMANCE BOND #1

KNOW ALL PERSONS BY THESE PRESENTS:,
That we, _____

_____

_____

hereinafter referred to as the "Principal,"
and, _____

_____

_____

hereinafter referred to as the "Surety" ("Sureties") are held and firmly bound to THE CITY OF NEW YORK, hereinafter referred to as the "City" or to its successors and assigns in the penal sum of _____

_____

_____

($_____) Dollars, lawful money of the United States for the payment of which said sum of money well and truly to be made, we, and each of us, bind ourselves, our heirs, executors, administrators, successors and assigns, jointly and severally, firmly by these presents.

WHEREAS, the Principal is about to enter, or has entered, into a Contract in writing with the City for

_____

_____

a copy of which Contract is annexed to and hereby made a part of this bond as though herein set forth in full;

NOW, THEREFORE, the conditions of this obligation are such that if the Principal, his or its representatives or assigns, shall well and faithfully perform the said Contract and all modifications, amendments, additions and alterations thereto that may hereafter be made, according to its terms and its true intent and meaning, including repair and or replacement of defective work and guarantees of maintenance for the periods stated in the Contract, and shall fully indemnify and save harmless the City from all cost and damage which it may suffer by reason of the Principal's default of the Contract, and shall fully reimburse and repay the City for all outlay and expense which the City may incur in making

<u>Performance Bond #1 (Pages 100 to 103)</u>: Use if the total contract price is $5 Million Or Less. Performance Bond #1 has been approved by the U.S. Small Business Administration ("SBA") for participation in its Bond Guarantee Program.

good any such default and shall protect the said City of New York against, and pay any and all amounts, damages, cost and judgments which may or shall be recovered against said City or its officers or agents or which the said City of New York may be called upon to pay any person or corporation by reason of any damages arising or growing out of the Principal's default of the Contract, then this obligation shall be null and void, otherwise to remain in full force and effect.

The Surety (Sureties), for value received, hereby stipulates and agrees, upon written notice from the City that the City has determined that the Principal is in default of the Contract, to (1) pay the City the cost to complete the contract as determined by the City in excess of the balance of the Contract held by the City, plus any damages or costs to which the City is entitled, up to the full amount of the above penal sum, (2) fully perform and complete the Work to be performed under the Contract, pursuant to the terms, conditions, and covenants thereof, or (3) tender a completion Contractor that is acceptable to the City. The Surety (Sureties) further agrees, at its option, either to notify the City that it elects to pay the city the cost of completion plus any applicable damages and costs under option (1) above, or to commence and diligently perform the Work specified in the Contract, including physical site work, within twenty-five (25) business days after written notice thereof from the City and, if the Surety elects to fully perform and complete the Work, then to complete all Work within the time set forth in the Contract or such other time as agreed to between the City and Surety in accordance with the Contract. If the Surety elects to tender payment pursuant to (1) above, then the Surety shall tender such amount within fifteen (15) business days notification from the City of the cost of completion. The Surety and the City reserve all rights and defenses each may have against the other; provided, however, that the Surety expressly agrees that its reservation of rights shall not provide a basis for non-performance of its obligation to pay the City the cost of completion, to commence and complete all Work as provided herein, or to tender a completion contractor.

The Surety (Sureties), for value received, for itself and its successors and assigns, hereby stipulates and agrees that the obligation of said Surety (Sureties) and its bond shall be in no way impaired or affected by any extension of time, modification, omission, addition, or change in or to the said Contract or the Work to be performed thereunder, or by any payment thereunder before the time required therein, or by any waiver of any provisions thereof, or any moneys due or to become due thereunder; and said Surety (Sureties) does hereby waive notice of any and all of such extensions, modifications, omissions, additions, changes, payments, and waivers, and hereby expressly stipulates and agrees that any and all things done and omitted to be done by and in relation to subcontractors shall have the same effect as to said Surety (Sureties) as though done or omitted to be done by or in relation to said Principal. Notwithstanding the above, if the City makes payments to the Principal before the time required by the contract that in the aggregate exceed $100,000 or 10% of the Contract price, whichever is less, and that have not become earned prior to the Principal being found to be in default, then all payments made to the Principal before the time required by the Contract shall be added to the remaining contract value available to be paid for the completion of the Contract as if such sums had not been paid to the Principal, but shall not provide a basis for non-performance of its obligation to pay the City the cost of completion, to commence and to complete all Work as provided herein, or to tender a completion contractor.

<u>Performance Bond #1 (Pages 100 to 103)</u>: Use if the total contract price is $5 Million Or Less. Performance Bond #1 has been approved by the U.S. Small Business Administration ("SBA") for participation in its Bond Guarantee Program.

IN WITNESS WHEREOF, The Principal and the Surety (Sureties) have hereunto set their hands and seals, and such of them as are corporations have caused their corporate seals to be hereunto affixed and these presents to be signed by their proper officers, this

_____ day of _____, 20_____.

(Seal)

_____(L.S.)
Principal

By:_____.

(Seal)

Surety

By:_____.
_____.

(Seal)

Surety

By:_____.
_____.

(Seal)

Surety

By:_____.
_____.

(Seal)

Surety

By:_____.

(Seal)

Surety

By:_____.

Bond Premium Rate _____.

Bond Premium Cost _____.

If the Contractor (Principal) is a partnership, the bond should be signed by each of the individuals who are partners.

If the Contractor (Principal) is a corporation, the bond should be signed in its correct corporate name by a duly authorized officer, agent, or attorney-in-fact.

There should be executed an appropriate number of counterparts of the bond corresponding to the number of counterparts of the Contract.

Performance Bond #1 (Pages 100 to 103): Use if the total contract price is $5 Million Or Less. Performance Bond #1 has been approved by the U.S. Small Business Administration ("SBA") for participation in its Bond Guarantee Program.

ACKNOWLEDGMENT OF PRINCIPAL IF A CORPORATION

State of _____ County of _____ ss:

On this _____ day of _____, 20_____ before me personally came _____,
to me known, who, being by me duly sworn did depose and say that he/she resides at _____
_____; that he/she is the _____
of the corporation described in and which executed the foregoing instrument; and that he/she signed his/her name to the foregoing instrument by order of the directors of said corporation as the duly authorized and binding act thereof.

_____
Notary Public or Commissioner of Deeds.

ACKNOWLEDGMENT OF PRINCIPAL IF A PARTNERSHIP

State of _____ County of _____ ss:

On this _____ day of _____, 20 _____ before me personally came _____,
to me known, who, being by me duly sworn did dispose and say that he/she resides at _____
_____; that he/she is _____ partner of _____, a limited/general partnership existing under the laws of the State of _____, the partnership described in and which executed the foregoing instrument; and that he/she signed his/her name to the foregoing instrument as the duly authorized and binding act of said partnership.

_____
Notary Public or Commissioner of Deeds.

ACKNOWLEDGMENT OF PRINCIPAL IF AN INDIVIDUAL

State of _____ County of _____ ss:

On this _____ day of _____, 20_____ before me personally came _____,
to me known, who,.being by me duly sworn did depose and say that he/she resides at _____
_____, and that he/she is the individual whose name is ~~subscribed to the within instrument and acknowledged to me that by his/her signature on the~~ instrument, said individual executed the instrument.

_____
Notary Public or Commissioner of Deeds

Each executed bond should be accompanied by: (a) appropriate acknowledgments of the respective parties; (b) appropriate duly certified copy of Power of Attorney or other certificate of authority where bond is executed by agent, officer or other representative of Principal or Surety; (c) a duly certified extract from By-Laws or resolutions of Surety under which Power of Attorney or other certificate of authority of its agent, officer or representative was issued, and (d) certified copy of latest published financial statement of assets and liabilities of Surety.

* * * * * * * *

Affix Acknowledgments and Justification of Sureties.

Performance Bond #2 (Pages 104 to 107): Use if the total contract price is more than $5 Million.

PERFORMANCE BOND #2

KNOW ALL PERSONS BY THESE PRESENTS:,

That we, PCI Industries, Corp., 550 Franklin Ave., Mt. Vernon, NY 10550

hereinafter referred to as the "Principal,"

and, Everest Reinsurance Company, P.O. Box 830, Liberty Corner, NJ 07938

hereinafter referred to as the "Surety" ("Sureties") are held and firmly bound to THE CITY OF NEW YORK, hereinafter referred to as the "City" or to its successors and assigns in the penal sum of Nine Million Five Hundred Sixty One Thousand Six Hundred Eighty Five and 00/100 Dollars

($ 9,561,685.00) Dollars, lawful money of the United States for the payment of which said sum of money well and truly to be made, we, and each of us, bind ourselves, our heirs, executors, administrators, successors and assigns, jointly and severally, firmly by these presents.

WHEREAS, the Principal is about to enter, or has entered, into a Contract in writing with the City for

Project ID: GCJA03-2B PIN: 8502019HW004C E-PIN: 85019B0012001 Construction of Right-Of-Way Green Infrastructure in the CSO Tributary Area JAM-003 and JAM-003A, Borough of Queens

a copy of which Contract is annexed to and hereby made a part of this bond as though herein set forth in full;

NOW, THEREFORE, the conditions of this obligation are such that if the Principal, his or its representatives or assigns, shall well and faithfully perform the said Contract and all modifications, amendments, additions and alterations thereto that may hereafter be made, according to its terms and its true intent and meaning, including repair and or replacement of defective work and guarantees of maintenance for the periods stated in the Contract, and shall fully indemnify and save harmless the City from all cost and damage which it may suffer by reason of the Principal's default of the Contract, and shall fully reimburse and repay the City for all outlay and expense which the City may incur in making

good any such default and shall protect the said City of New York against, and pay any and all amounts, damages, cost and judgments which may or shall be recovered against said City or its officers or agents or which the said City of New York may be called upon to pay any person or corporation by reason of any damages arising or growing out of the Principal's default of the Contract, then this obligation shall be null and void, otherwise to remain in full force and effect.

The Surety (Sureties), for value received, hereby stipulates and agrees, upon written notice from the City that the City has determined that the Principal is in default of the Contract, to either (1) pay the full amount of the above penal sum in complete discharge and exoneration of this bond and of all the liabilities of the Surety relating to this bond, or (2) fully perform and complete the Work to be performed under the Contract, pursuant to the terms, conditions, and covenants thereof. The Surety (Sureties) further agrees, at its option, either to tender the penal sum or to commence and diligently perform the Work specified in the Contract, including physical site work, within twenty-five (25) business days after written notice thereof from the City and to complete all Work within the time set forth in the Contract or such other time as agreed to between the City and Surety in accordance with the Contract. The Surety and the City reserve all rights and defenses each may have against the other; provided, however, that the Surety expressly agrees that its reservation of rights shall not provide a basis for non-performance of its obligation to commence and to complete all Work as provided herein.

The Surety (Sureties), for value received, for itself and its successors and assigns, hereby stipulates and agrees that the obligation of said Surety (Sureties) and its bond shall be in no way impaired or affected by any extension of time, modification, omission, addition, or change in or to the said Contract or the Work to be performed thereunder, or by any payment thereunder before the time required therein, or by any waiver of any provisions thereof, or by any assignment, subletting or other transfer thereof or of any Work to be performed or any moneys due or to become due thereunder; and said Surety (Sureties) does hereby waive notice of any and all of such extensions, modifications, omissions, additions, changes, payments, waivers, assignments, subcontracts and transfers, and hereby expressly stipulates and agrees that any and all things done and omitted to be done by and in relation to assignees, subcontractors, and other transferees shall have the same effect as to said Surety (Sureties) as though done or omitted to be done by or in relation to said Principal.

Performance Bond #2 (Pages 104 to 107): Use if the total contract price is more than $5 Million.

IN WITNESS WHEREOF, The Principal and the Surety (Sureties) have hereunto set their hands and seals, and such of them as are corporations have caused their corporate seals to be hereunto affixed and these presents to be signed by their proper officers, this

17th day of June 20 19.

(Seal)

PCI Industries, Corp. (L.S.)

Principal

By: _____.

(Seal)

Surety

Everest Reinsurance Company

By: Katherine Acosta.

Katherine Acosta, Attorney-In-Fact.

(Seal)

Surety

By: _____.

_____.

(Seal)

Surety

By: _____.

_____.

(Seal)

Surety

By: _____.

_____.

(Seal)

Surety

By: _____.

Bond Premium Rate $10.00 Flat Rate.

Bond Premium Cost $191,234.00.

If the Contractor (Principal) is a partnership, the bond should be signed by each of the individuals who are partners.

If the Contractor (Principal) is a corporation, the bond should be signed in its correct corporate name by a duly authorized officer, agent, or attorney-in-fact.

There should be executed an appropriate number of counterparts of the bond corresponding to the number of counterparts of the Contract.

Performance Bond #2 (Pages 104 to 107): Use if the total contract price is more than $5 Million.

ACKNOWLEDGMENT OF PRINCIPAL IF A CORPORATION

State of New York County of Westchester ss:

On this 18 day of June, 20 19 before me personally came Richard Persico to me known, who, being by me duly sworn did depose and say that he resides at Yonkers NY ; that he/she is the President of the corporation described in and which executed the foregoing instrument; that he/she signed his/her name to the foregoing instrument by order of the directors of said corporation as the duly authorized and binding act thereof.

Tracey A. Box

Notary Public or Commissioner of Deeds.

TRACEY A. BOX
NOTARY PUBLIC-STATE OF NEW YORK
No. 01BO5081711
Qualified in New York County
My Commission Expires 5/07/2019

ACKNOWLEDGMENT OF PRINCIPAL IF A PARTNERSHIP

State of _____ County of _____ ss:

On this _____ day of _____, 20 _____ before me personally came _____, to me known, who, being by me duly sworn did depose and say that he/she resides at _____

_____; that he/she is _____ partner of _____, a limited/general partnership existing under the laws of the State of _____, the partnership described in and which executed the foregoing instrument; and that he/she signed his/her name to the foregoing instrument as the duly authorized and binding act of said partnership.

_____
Notary Public or Commissioner of Deeds

ACKNOWLEDGMENT OF PRINCIPAL IF AN INDIVIDUAL

State of _____ County of _____ ss:

On this _____ day of _____, 20_____ before me personally came _____, to me known, who, being by me duly sworn did depose and say that he/she resides at _____

_____, and that he/she is the individual whose name is subscribed to the within instrument and acknowledged to me that by his/her signature on the instrument, said individual executed the instrument.

_____
Notary Public or Commissioner of Deeds

Each executed bond should be accompanied by: (a) appropriate acknowledgments of the respective parties; (b) appropriate duly certified copy of Power of Attorney or other certificate of authority where bond is executed by agent, officer or other representative of Principal or Surety; (c) a duly certified extract from By-Laws or resolutions of Surety under which Power of Attorney or other certificate of authority of its agent, officer or representative was issued, and (d) certified copy of latest published financial statement of assets and liabilities of Surety.

* * * * * * * *

Affix Acknowledgments and Justification of Sureties.

ACKNOWLEDGMENT OF SURETY COMPANY

STATE OF New York }

COUNTY OF Nassau }

On this June 17, 2019, before me personally came Katherine Acosta to me known, who, being by me duly sworn, did depose and say; that he/she resides in Suffolk County, State of New York that he/she is the Attorney-In-Fact of the Everest Reinsurance Company the corporation described in which executed the above instrument; that he/she knows the seal of said corporation; that the seal affixed to said instrument is such corporate seal; that is was so affixed by the Board of Directors of said corporation; and that he/she signed his/her name thereto by like order; and the affiant did further depose and say that the Superintendent of Insurance of the State of New York, has pursuant to Section 1111 of the Insurance Law of the State of New York, issued to Everest Reinsurance Company (Surety) his/her certificate of qualification evidencing the qualification of said Company and its sufficiency under any law of the State of New York as surety and guarantor, and the propriety of accepting and approving is as such; and that such certificate has not been revoked.

Notary Public

LAURA MARIE MARINO
Notary Public-State of New York
No. 01MA6388129
Qualified in Nassau County
Commission Expires 03/04/2023

NY acknowledgement

EVEREST.

ES007R12504

POWER OF ATTORNEY
EVEREST REINSURANCE COMPANY
DELAWARE

KNOW ALL PERSONS BY THESE PRESENTS: That Everest Reinsurance Company, a corporation of the State of Delaware ("Company") having its principal office located at 477 Martinsville Road, Liberty Corner, New Jersey 07938, do hereby nominate, constitute, and appoint:

Desiree Cardlin, Colette R. Chisholm, Camille Maitland, George O. Brewster, Gerard S. Macholz, Nelly Renchiwich, Rita Losquadro, Thomas Bean, Robert T. Pearson, Susan Lupski, Dana Granice, Michelle Wannamaker, Katherine Acosta

its true and lawful Attorney(s)-in-fact to make, execute, attest, seal and deliver for and on its behalf, as surety, and as its act and deed, where required, any and all bonds and undertakings in the nature thereof, for the penal sum of no one of which is in any event to exceed UNLIMITED, reserving for itself the full power of substitution and revocation.

Such bonds and undertakings, when duly executed by the aforesaid Attorney(s)-in-fact shall be binding upon the Company as fully and to the same extent as if such bonds and undertakings were signed by the President and Secretary of the Company and sealed with its corporate seal.

This Power of Attorney is granted and is signed by facsimile under and by the authority of the following Resolutions adopted by the Board of Directors of Company ("Board") on the 28th day of July 2016:

***RESOLVED**, that the President, any Executive Vice President, and any Senior Vice President and Anthony Romano are hereby appointed by the Board as authorized to make, execute, seal and deliver for and on behalf of the Company, any and all bonds, undertakings, contracts or obligations in surety or co-surety with others and that the Secretary or any Assistant Secretary of the Company be and that each of them hereby is authorized to attest to the execution of any such bonds, undertakings, contracts or obligations in surety or co-surety and attach thereto the corporate seal of the Company.*

***RESOLVED, FURTHER**, that the President, any Executive Vice President, and any Senior Vice President and Anthony Romano are hereby authorized to execute powers of attorney qualifying the attorney named in the given power of attorney to execute, on behalf of the Company, bonds and undertakings in surety or co-surety with others, and that the Secretary or any Assistant Secretary of the Company be, and that each of them is hereby authorized to attest the execution of any such power of attorney, and to attach thereto the corporate seal of the Company.*

***RESOLVED, FURTHER**, that the signature of such officers named in the preceding resolutions and the corporate seal of the Company may be affixed to such powers of attorney or to any certificate relating thereto by facsimile, and any such power of attorney or certificate bearing such facsimile signatures or facsimile seal shall be thereafter valid and binding upon the Company with respect to any bond, undertaking, contract or obligation in surety or co-surety with others to which it is attached.*

IN WITNESS WHEREOF, Everest Reinsurance Company has caused their corporate seals to be affixed hereto, and these presents to be signed by their duly authorized officers this 28th day of July 2016.

Everest Reinsurance Company

Attest: Nicole Chase, Assistant Secretary

By: Anthony Romano, Vice President

On this 28th day of July 2016, before me personally came Anthony Romano, known to me, who, being duly sworn, did execute the above instrument; that he knows the seal of said Company; that the seal affixed to the aforesaid instrument is such corporate seal and was affixed thereto; and that he executed said instrument by like order.

LINDA ROBINS
Notary Public, State of New York
No 01R06239736
Qualified in Queens County
Term Expires April 25, 2023

Linda Robins, Notary Public

IN WITNESS WHEREOF, I have hereunto set my hand and affixed the seal of said Company, at the Liberty Corner, this _____ day of JUN 17 2019 20____.

ES 00 01 04 16

Bond #04546 contains a security pantograph, blue background, heat-sensitive ink, coin-reactive watermark, and microtext printing on border.

HEAT SENSITIVE SHIELD • FADES WITH HEAT OR TOUCH •

EVEREST REINSURANCE COMPANY
STATEMENTS OF FINANCIAL CONDITION

	December 31, 2018	December 31, 2017
ASSETS		
Bonds	$ 5,803,284,602	$ 3,672,234,234
Stocks	524,520,092	451,346,228
Short-term investments	997,767	-
Other invested assets	2,138,471,309	2,238,399,502
Cash and cash equivalents	333,472,347	243,245,188
Accounts receivable-premium balances	1,817,305,389	1,583,153,684
Reinsurance recoverable	380,867,637	612,084,447
Other assets	820,251,843	685,600,063
Total Assets	$ 11,819,170,986	$ 9,486,063,346
LIABILITIES		
Loss and loss adjustment expense reserve	$ 5,504,827,165	$ 3,661,132,517
Unearned premium reserve	1,507,245,585	1,310,324,727
Ceded reinsurance premium payable (net of ceding commission)	318,111,587	494,144,179
Reserve for commissions, taxes and other liabilities	838,392,552	628,609,659
Total Liabilities	$ 8,168,576,889	$ 6,094,211,082
SURPLUS AND OTHER FUNDS		
Common capital stock	$ 10,000,000	$ 10,000,000
Contributed Surplus	2,462,668,168	987,509,603
Unassigned surplus	1,177,925,929	2,394,342,661
Total capital and surplus	$ 3,650,594,097	$ 3,391,852,264
Total Liabilities and Surplus	$ 11,819,170,986	$ 9,486,063,346

Bonds and stocks are valued on a basis promulgated by the National Association of Insurance Commissioners

Payment Bond (Pages 108 to 111): Use for any contract for which a Payment Bond is required.

PAYMENT BOND

KNOW ALL PERSONS BY THESE PRESENTS, That we, PCI Industries, Corp., 550 Franklin Ave. Mt. Vernon, NY 10550

hereinafter referred to as the "Principal", and Everest Reinsurance Company P.O. Box 830, Liberty Corner, NJ 07938

hereinafter referred to as the "Surety" ("Sureties") are held and firmly bound to THE CITY OF NEW YORK, hereinafter referred to as the "City" or to its successors and assigns, in the penal sum of

Nine Million Five Hundred Sixty One Thousand Six Hundred Eighty Five and 00/100 Dollars

($ 9,561,685.00) Dollars, lawful money of the United States, for the payment of which said sum of money well and truly to be made, we, and each of us, bind ourselves, our heirs, executors, administrators, successors and assigns, jointly and severally, firmly by these presents.

WHEREAS, the Principal is about to enter, or has entered, into a Contract in writing with the City for

Project ID: GCJA03-2B PIN: 8502019HW004C E-PIN: 85019B0012001 Construction of Right-Of-Way Green Infrastructure in the CSO Tributary Area JAM-003 and JAM-003A, Borough of Queens

a copy of which Contract is annexed to and hereby made a part of this bond as though herein set forth in full;

NOW, THEREFORE, the conditions of this obligation are such that if the Principal, his or its representatives or assigns and other Subcontractors to whom Work under this Contract is sublet and his or their successors and assigns shall promptly pay or cause to be paid all lawful claims for

(a) Wages and compensation for labor performed and services rendered by all persons engaged in the prosecution of the Work under said Contract, and any amendment or extension thereof or addition thereto, whether such persons be agents servants or employees of the Principal or any such Subcontractor, including all persons so engaged who perform the work of laborers or mechanics at or in the vicinity of the site

of the Project regardless of any contractual relationship between the Principal or such Subcontractors, or his or their successors or assigns, on the one hand and such laborers or mechanics on the other, but not including office employees not regularly stationed at the site of the project; and

(b) Materials and supplies (whether incorporated in the permanent structure or not), as well as teams, fuels, oils, implements or machinery furnished, used or consumed by said Principal or any subcontractor at or in the vicinity of the site of the Project in the prosecution of the Work under said Contract and any amendment or extension thereof or addition thereto; then this obligation shall be void, otherwise to remain in full force and effect.

This bond is subject to the following additional conditions, limitations and agreements:

(a) The Principal and Surety (Sureties) agree that this bond shall be for the benefit of any materialmen or laborer having a just claim, as well as the City itself.

(b) All persons who have performed labor, rendered services or furnished materials and supplies, as aforesaid, shall have a direct right of action against the Principal and his, its or their successors and assigns, and the Surety (Sureties) herein, or against either or both or any of them and their successors and assigns. Such persons may sue in their own name, and may prosecute the suit to judgment and execution without the necessity of joining with any other persons as party plaintiff.

(c) The Principal and Surety (Sureties) agree that neither of them will hold the City liable for any judgment for costs of otherwise, obtained by either or both of them against a laborer or materialman in a suit brought by either a laborer or materialman under this bond for moneys allegedly due for performing work or furnishing material.

(d) The Surety (Sureties) or its successors and assigns shall not be liable for any compensation recoverable by an employee or laborer under the Workmen's Compensation Law.

(e) In no event shall the Surety (Sureties), or its successors or assigns, be liable for a greater sum than the penalty of this bond or be subject to any suit, action or proceeding hereon that is instituted by any person, firm, or corporation hereunder later than two years after the complete performance of said Contract and final settlement thereof.

The Principal, for himself and his successors and assigns, and the Surety (Sureties), for itself and its successors and assigns, do hereby expressly waive any objection that might be interposed as to the right of the City to require a bond containing the foregoing provisions, and they do hereby further expressly waive any defense which they or either of them might interpose to an action brought hereon by any person, firm or corporation, including subcontractors, materialmen and third persons, for work, labor, services, supplies or material performed rendered, or furnished as aforesaid upon the ground that there is no law authorizing the City to require the foregoing provisions to be place in this bond.

And the Surety (Sureties), for value received, for itself and its successors and assigns, hereby stipulates and agrees that the obligation of said Surety (Sureties), and its bonds shall be in no way impaired or affected by any extension of time, modification, omission, addition, or change in or of the said Contract or the work to be performed thereunder, or by any payment thereunder before the time required therein, or by any waiver of any provisions thereof, or by any assignment, subletting or other transfer thereof or of any part thereof, or of any Work to be performed, or any moneys due to become due thereunder and said Surety (Sureties) does hereby waive notice of any and all of such extensions, modifications, omissions, additions, changes, payments, waivers, assignments, subcontracts and transfers, and hereby expressly stipulates and agrees that any and all things done and omitted to be done by and in relation to assignees, Subcontractors, and other transferees shall have the same effect as to said Surety (Sureties) as though done or omitted to be done or in relation to said Principal.

Payment Bond (Pages 108 to 111): Use for any contract for which a Payment Bond is required.

IN WITNESS WHEREOF, the Principal and the Surety (Sureties) have hereunto set their hands and seals, and such of them as are corporations have caused their corporate seals to be hereunto affixed and these presents to be signed by their proper officers, this 17th day of June, 2019.

(Seal)

PCI Industries, Corp. (L.S.)
Principal
By: [signature]

(Seal)

Everest Reinsurance Company
Surety
By: [signature]
Katherine Acosta, Attorney-In-Fact

(Seal)

_____
Surety
By: _____

(Seal)

_____
Surety
By: _____

(Seal)

_____
Surety
By: _____

If the Contractor (Principal) is a partnership, the bond should be signed by each of the individuals who are partners.

If the Contractor (Principal) is a corporation, the bond should be signed in its correct corporate name by a duly authorized officer, agent, or attorney-in-fact.

There should be executed an appropriate number of counterparts of the bond corresponding to the number of counterparts of the Contract.

Payment Bond (Pages 108 to 111): Use for any contract for which a Payment Bond is required.

ACKNOWLEDGMENT OF PRINCIPAL, IF A CORPORATION

State of New York County of Westchester ss:

On this 18 day of June, 2019, before me personally came Richard Persico to me known, who, being by me duly sworn did depose and say that he resides at Yonkers NY that he is the President of the corporation described in and which executed the foregoing instrument; that he knows the seal of said corporation; that one of the seals affixed to said instrument is such seal; that it was so affixed by order of the directors of said corporation, and that he signed his name thereto by like order.

TRACEY A. BOX
NOTARY PUBLIC-STATE OF NEW YORK
No. 01BO5081711
Qualified in New York County
My Commission Expires 07-07-2019

Tracey A. Box
Notary Public or Commissioner of Deeds

ACKNOWLEDGMENT OF PRINCIPAL, IF A PARTNERSHIP

State of _____ County of _____ ss:

On this _____ day of _____, _____, before me personally appeared _____ to me known, and known to me to be one of the members of the firm of _____ described in and who executed the foregoing instrument; and he acknowledged to me that he executed the same as and for the act and deed of said firm.

_____
Notary Public or Commissioner of Deeds

ACKNOWLEDGMENT OF PRINCIPAL, IF AN INDIVIDUAL

State of _____ County of _____ ss:

On this _____ day of _____, _____, before me personally appeared _____ to me known, and known to me to be the person described in and who executed the foregoing instrument; and acknowledged that he executed the same.

_____
Notary Public or Commissioner of Deeds

Each executed bond should be accompanied by: (a) appropriate acknowledgments of the respective parties; (b) appropriate duly certified copy of Power of Attorney or other certificate of authority where bond is executed by agent, officer or other representative of Principal or Surety; (c) a duly certified extract from By-Laws or resolutions of Surety under which Power of Attorney or other certificate of authority of its agent, officer or representative was issued, and (d) certified copy of latest published financial statement of assets and liabilities of Surety.

* * * * * * * *

Affix Acknowledgments and Justification of Sureties.



ACKNOWLEDGMENT OF SURETY COMPANY

STATE OF New York }

COUNTY OF Nassau }

On this June 17, 2019, before me personally came Katherine Acosta to me known, who, being by me duly sworn, did depose and say; that he/she resides in Suffolk County, State of New York that he/she is the Attorney-In-Fact of the Everest Reinsurance Company the corporation described in which executed the above instrument; that he/she knows the seal of said corporation; that the seal affixed to said instrument is such corporate seal; that is was so affixed by the Board of Directors of said corporation; and that he/she signed his/her name thereto by like order; and the affiant did further depose and say that the Superintendent of Insurance of the State of New York, has pursuant to Section 1111 of the Insurance Law of the State of New York, issued to Everest Reinsurance Company (Surety) his/her certificate of qualification evidencing the qualification of said Company and its sufficiency under any law of the State of New York as surety and guarantor, and the propriety of accepting and approving is as such; and that such certificate has not been revoked.

Laura Marie Marino
Notary Public

NY acknowledgement

LAURA MARIE MARINO
Notary Public-State of New York
No. 01MA6388129
Qualified in Nassau County
Commission Expires 03/04/2023



EVEREST

ES007R12506

POWER OF ATTORNEY
EVEREST REINSURANCE COMPANY
DELAWARE

KNOW ALL PERSONS BY THESE PRESENTS: That Everest Reinsurance Company, a corporation of the State of Delaware ("Company") having its principal office located at 477 Martinsville Road, Liberty Corner, New Jersey 07938, do hereby nominate, constitute, and appoint:

Desiree Cardlin, Colette R. Chisholm, Camille Maitland, George O. Brewster, Gerard S. Macholz, Nelly Renchiwich, Rita Losquadro, Thomas Bean, Robert T. Pearson, Susan Lupski, Dana Granice, Michelle Wannamaker, Katherine Acosta

its true and lawful Attorney(s)-in-fact to make, execute, attest, seal and deliver for and on its behalf, as surety, and as its act and deed, where required, any and all bonds and undertakings in the nature thereof, for the penal sum of no one of which is in any event to exceed UNLIMITED, reserving for itself the full power of substitution and revocation.

Such bonds and undertakings, when duly executed by the aforesaid Attorney(s)-in-fact shall be binding upon the Company as fully and to the same extent as if such bonds and undertakings were signed by the President and Secretary of the Company and sealed with its corporate seal.

This Power of Attorney is granted and is signed by facsimile under and by the authority of the following Resolutions adopted by the Board of Directors of Company ("Board") on the 28th day of July 2016:

***RESOLVED**, that the President, any Executive Vice President, and any Senior Vice President and Anthony Romano are hereby appointed by the Board as authorized to make, execute, seal and deliver for and on behalf of the Company, any and all bonds, undertakings, contracts or obligations in surety or co-surety with others and that the Secretary or any Assistant Secretary of the Company be and that each of them hereby is authorized to attest to the execution of any such bonds, undertakings, contracts or obligations in surety or co-surety and attach thereto the corporate seal of the Company.*

***RESOLVED, FURTHER**, that the President, any Executive Vice President, and any Senior Vice President and Anthony Romano are hereby authorized to execute powers of attorney qualifying the attorney named in the given power of attorney to execute, on behalf of the Company, bonds and undertakings in surety or co-surety with others, and that the Secretary or any Assistant Secretary of the Company be, and that each of them is hereby authorized to attest the execution of any such power of attorney, and to attach thereto the corporate seal of the Company.*

***RESOLVED, FURTHER**, that the signature of such officers named in the preceding resolutions and the corporate seal of the Company may be affixed to such powers of attorney or to any certificate relating thereto by facsimile, and any such power of attorney or certificate bearing such facsimile signatures or facsimile seal shall be thereafter valid and binding upon the Company with respect to any bond, undertaking, contract or obligation in surety or co-surety with others to which it is attached.*

IN WITNESS WHEREOF, Everest Reinsurance Company has caused their corporate seals to be affixed hereto, and these presents to be signed by their duly authorized officers this 28th day of July 2016.

Everest Reinsurance Company

Everest Reinsurance Company CORPORATE SEAL 1973 DELAWARE

Attest: Nicole Chase, Assistant Secretary

By: Anthony Romano, Vice President

On this 28th day of July 2016, before me personally came Anthony Romano, known to me, who, being duly sworn, did execute the above instrument; that he knows the seal of said Company; that the seal affixed to the aforesaid instrument is such corporate seal and was affixed thereto; and that he executed said instrument by like order.

LINDA ROBINS
Notary Public, State of New York
No 01R06239736
Qualified in Queens County
Term Expires April 25, 2023

Linda Robins, Notary Public

IN WITNESS WHEREOF, I have hereunto set my hand and affixed the seal of said Company, at the Liberty Corner, this _____ day of JUN 17 2019 20____.

HEAT SENSITIVE SHIELD • FADES WITH HEAT OR TOUCH •

Validated #04546 contains a security pantograph, blue background, heat-sensitive ink, coin-reactive watermark, and microtext printing on border.

EVEREST REINSURANCE COMPANY
STATEMENTS OF FINANCIAL CONDITION

	December 31, 2018	December 31, 2017
ASSETS		
Bonds	$ 5,803,284,602	$ 3,672,234,234
Stocks	524,520,092	451,346,228
Short-term investments	997,767	-
Other invested assets	2,138,471,309	2,238,399,502
Cash and cash equivalents	333,472,347	243,245,188
Accounts receivable-premium balances	1,817,305,389	1,583,153,684
Reinsurance recoverable	380,867,637	612,084,447
Other assets	820,251,843	685,600,063
Total Assets	$ 11,819,170,986	$ 9,486,063,346
LIABILITIES		
Loss and loss adjustment expense reserve	$ 5,504,827,165	$ 3,661,132,517
Unearned premium reserve	1,507,245,585	1,310,324,727
Ceded reinsurance premium payable (net of ceding commission)	318,111,587	494,144,179
Reserve for commissions, taxes and other liabilities	838,392,552	628,609,659
Total Liabilities	$ 8,168,576,889	$ 6,094,211,082
SURPLUS AND OTHER FUNDS		
Common capital stock	$ 10,000,000	$ 10,000,000
Contributed Surplus	2,462,668,168	987,509,603
Unassigned surplus	1,177,925,929	2,394,342,661
Total capital and surplus	$ 3,650,594,097	$ 3,391,852,264
Total Liabilities and Surplus	$ 11,819,170,986	$ 9,486,063,346

Bonds and stocks are valued on a basis promulgated by the National Association of Insurance Commissioners

CERTIFICATE OF LIABILITY INSURANCE

DATE (MM/DD/YYYY): 10/29/2019

THIS CERTIFICATE IS ISSUED AS A MATTER OF INFORMATION ONLY AND CONFERS NO RIGHTS UPON THE CERTIFICATE HOLDER. THIS CERTIFICATE DOES NOT AFFIRMATIVELY OR NEGATIVELY AMEND, EXTEND OR ALTER THE COVERAGE AFFORDED BY THE POLICIES BELOW. THIS CERTIFICATE OF INSURANCE DOES NOT CONSTITUTE A CONTRACT BETWEEN THE ISSUING INSURER(S), AUTHORIZED REPRESENTATIVE OR PRODUCER, AND THE CERTIFICATE HOLDER.

IMPORTANT: If the certificate holder is an ADDITIONAL INSURED, the policy(ies) must have ADDITIONAL INSURED provisions or be endorsed. If SUBROGATION IS WAIVED, subject to the terms and conditions of the policy, certain policies may require an endorsement. A statement on this certificate does not confer rights to the certificate holder in lieu of such endorsement(s).

PRODUCER
John M. Glover Agency
P.O. Box 700
Norwalk CT 06852

CONTACT NAME: Janice Caldararo
PHONE (A/C, No, Ext): 914-829-9077 **FAX (A/C, No):** 203-274-9471
E-MAIL ADDRESS: jcaldararo@johnmglover.com

INSURER(S) AFFORDING COVERAGE	NAIC #
INSURER A : Starr Indemnity and Liability Company	38318
INSURER B : Ace American Insurance Company	22667
INSURER C : West American Insurance Company	44393
INSURER D :	
INSURER E :	
INSURER F :	

INSURED PCIINDU-01
PCI Industries Corp.
550 Franklin Avenue
Mount Vernon NY 10550

COVERAGES **CERTIFICATE NUMBER:** 418479915 **REVISION NUMBER:**

THIS IS TO CERTIFY THAT THE POLICIES OF INSURANCE LISTED BELOW HAVE BEEN ISSUED TO THE INSURED NAMED ABOVE FOR THE POLICY PERIOD INDICATED. NOTWITHSTANDING ANY REQUIREMENT, TERM OR CONDITION OF ANY CONTRACT OR OTHER DOCUMENT WITH RESPECT TO WHICH THIS CERTIFICATE MAY BE ISSUED OR MAY PERTAIN, THE INSURANCE AFFORDED BY THE POLICIES DESCRIBED HEREIN IS SUBJECT TO ALL THE TERMS, EXCLUSIONS AND CONDITIONS OF SUCH POLICIES. LIMITS SHOWN MAY HAVE BEEN REDUCED BY PAID CLAIMS.

INSR LTR	TYPE OF INSURANCE	ADDL INSD	SUBR WVD	POLICY NUMBER	POLICY EFF (MM/DD/YYYY)	POLICY EXP (MM/DD/YYYY)	LIMITS	
A	X **COMMERCIAL GENERAL LIABILITY** CLAIMS-MADE X OCCUR GEN'L AGGREGATE LIMIT APPLIES PER: POLICY X PRO-JECT LOC OTHER:	Y		1000025716191	4/30/2019	4/30/2020	EACH OCCURRENCE DAMAGE TO RENTED PREMISES (Ea occurrence) MED EXP (Any one person) PERSONAL & ADV INJURY GENERAL AGGREGATE PRODUCTS - COMP/OP AGG 	$ 2,000,000 $ 300,000 $ 10,000 $ 1,000,000 $ 4,000,000 $ 4,000,000 $
A	**AUTOMOBILE LIABILITY** X ANY AUTO OWNED AUTOS ONLY HIRED AUTOS ONLY SCHEDULED AUTOS NON-OWNED AUTOS ONLY			1000198621191	4/30/2019	4/30/2020	COMBINED SINGLE LIMIT (Ea accident) BODILY INJURY (Per person) BODILY INJURY (Per accident) PROPERTY DAMAGE (Per accident) 	$ 1,000,000 $ $ $ $
B	X **UMBRELLA LIAB** X OCCUR **EXCESS LIAB** CLAIMS-MADE DED X RETENTION $ 10,000			N11036004 002	8/1/2019	4/30/2020	EACH OCCURRENCE AGGREGATE 	$ 5,000,000 $ 5,000,000 $
A	**WORKERS COMPENSATION AND EMPLOYERS' LIABILITY** ANYPROPRIETOR/PARTNER/EXECUTIVE OFFICER/MEMBER EXCLUDED? Y / N: N **(Mandatory in NH)** If yes, describe under DESCRIPTION OF OPERATIONS below	N / A		100 0003674191	4/30/2019	4/30/2020	X PER STATUTE OTH-ER E.L. EACH ACCIDENT E.L. DISEASE - EA EMPLOYEE E.L. DISEASE - POLICY LIMIT	 $ 1,000,000 $ 1,000,000 $ 1,000,000
C	Equipment Floater			BMW58119540	8/7/2019	8/7/2020	Leased/Rented	650,000

DESCRIPTION OF OPERATIONS / LOCATIONS / VEHICLES (ACORD 101, Additional Remarks Schedule, may be attached if more space is required)
Project ID.: GCJA03-2B
City of New York, including its officials and employees, with coverage at least as broad as ISO Form CG 2010 and CG 2037, as well as all person(s) or organization(s), if any, that Article 2201.1(b) of the Contract requires to be named as an additional insured with coverage at least as broad as ISO Form CG 2026 and National Grid are included as an additional insured under the General Liability policy.

CERTIFICATE HOLDER

DDC Director, Insurance Risk Manager
30-30 Thomson Avenue, 4th Floor (DNCY Building)
Long Island, NY 11101

CANCELLATION

SHOULD ANY OF THE ABOVE DESCRIBED POLICIES BE CANCELLED BEFORE THE EXPIRATION DATE THEREOF, NOTICE WILL BE DELIVERED IN ACCORDANCE WITH THE POLICY PROVISIONS.

AUTHORIZED REPRESENTATIVE
John O. Forlini

© 1988-2015 ACORD CORPORATION. All rights reserved.

CITY OF NEW YORK

CERTIFICATION BY INSURANCE BROKER OR AGENT

The undersigned insurance broker or agent represents to the City of New York that the attached Certificate of Insurance is accurate in all material respects.

John W. Griffin
[Name of broker or agent (typewritten)]

45 Knollwood Road, Elmsford, NY 10523
[Address of broker or agent (typewritten)]

jgriffin@johnmglover.com
[Email address of broker or agent (typewritten)]

914-829-9073 phone / 203-274-9456 fax
[Phone number/Fax number of broker or agent (typewritten)]

[Signature of authorized official, broker, or agent]

John W. Griffin - Vice President
[Name and title of authorized official, broker, or agent (typewritten)]

State of New York)
County of Westchester) ss.:

Sworn to before me this 29TH day of Oct 2019

NOTARY PUBLIC FOR THE STATE OF NY

ROBERT A SCHILTZ JR
Notary Public, State of New York
Reg. No. 01SC4954066
Qualified in Westchester County
Commission Expires 01/15/2022

NEW YORK STATE | Workers' Compensation Board

CERTIFICATE OF INSURANCE COVERAGE
DISABILITY AND PAID FAMILY LEAVE BENEFITS LAW

PART 1. To be completed by Disability and Paid Family Leave Benefits Carrier or Licensed Insurance Agent of that Carrier

1a. Legal Name & Address of Insured (use street address only)
PCI INDUSTRIES CORP

550 FRANKLIN AVENUE
MT VERNON, NY 10550

Work Location of Insured *(Only required if coverage is specifically limited to certain locations in New York State, i.e., Wrap-Up Policy)*

1b. Business Telephone Number of Insured
914-665-4700

1c. Federal Employer Identification Number of Insured or Social Security Number
204530527

2. Name and Address of Entity Requesting Proof of Coverage (Entity Being Listed as the Certificate Holder)
DDC Director, Insurance Risk Manager
30-30 Thomson Avenue, 4th Floor (DNCY Building)
Long Island, NY 11101

3a. Name of Insurance Carrier
ShelterPoint Life Insurance Company

3b. Policy Number of Entity Listed in Box "1a"
DBL253809

3c. Policy effective period
05/06/2019 to 05/05/2020

4. Policy provides the following benefits:
- [x] A. Both disability and paid family leave benefits.
- [ ] B. Disability benefits only.
- [ ] C. Paid family leave benefits only.

5. Policy covers:
- [x] A. All of the employer's employees eligible under the NYS Disability and Paid Family Leave Benefits Law.
- [ ] B. Only the following class or classes of employer's employees:

Under penalty of perjury, I certify that I am an authorized representative or licensed agent of the insurance carrier referenced above and that the named insured has NYS Disability and/or Paid Family Leave Benefits insurance coverage as described above.

Date Signed 10/29/2019 By _____
(Signature of insurance carrier's authorized representative or NYS Licensed Insurance Agent of that insurance carrier)

Telephone Number 516-829-8100 Name and Title Richard White, Chief Executive Officer

IMPORTANT: If Boxes 4A and 5A are checked, and this form is signed by the insurance carrier's authorized representative or NYS Licensed Insurance Agent of that carrier, this certificate is COMPLETE. Mail it directly to the certificate holder.

If Box 4B, 4C or 5B is checked, this certificate is NOT COMPLETE for purposes of Section 220, Subd. 8 of the NYS Disability and Paid Family Leave Benefits Law. It must be mailed for completion to the Workers' Compensation Board, Plans Acceptance Unit, PO Box 5200, Binghamton, NY 13902-5200.

PART 2. To be completed by the NYS Workers' Compensation Board (Only if Box 4C or 5B of Part 1 has been checked)

State of New York
Workers' Compensation Board

According to information maintained by the NYS Workers' Compensation Board, the above-named employer has complied with the NYS Disability and Paid Family Leave Benefits Law with respect to all of his/her employees.

Date Signed _____ By _____
(Signature of Authorized NYS Workers' Compensation Board Employee)

Telephone Number _____ Name and Title _____

Please Note: *Only insurance carriers licensed to write NYS disability and paid family leave benefits insurance policies and NYS licensed insurance agents of those insurance carriers are authorized to issue Form DB-120.1.* ***Insurance brokers are NOT authorized to issue this form.***

DB-120.1 (10-17)

NEW YORK STATE | Workers' Compensation Board

CERTIFICATE OF NYS WORKERS' COMPENSATION INSURANCE COVERAGE

1a. Legal Name & Address of Insured (use street address only) PCI Industries Corp. 550 Franklin Avenue Mount Vernon NY 10550 Work Location of Insured (Only required if coverage is specifically limited to *certain locations in New York State, i.e., a Wrap-Up Policy)*	1b. Business Telephone Number of Insured 914-665-4700 x 103 1c. NYS Unemployment Insurance Employer Registration Number of Insured 1d. Federal Employer Identification Number of Insured or Social Security Number 138204111
2. Name and Address of Entity Requesting Proof of Coverage (Entity Being Listed as the Certificate Holder) DDC Director, Insurance Risk Manager 30-30 Thomson Avenue, 4th Floor (DNCY Building) Long Island, NY 11101	3a. Name of Insurance Carrier Starr Indemnity and Liability Company 3b. Policy Number of Entity Listed in Box "1a" 100 0003674191 3c. Policy effective period 4/30/2019 to 4/30/2020 3d. The Proprietor, Partners or Executive Officers are ☒ included. (Only check box if all partners/officers included) ☐ all excluded or certain partners/officers excluded.

This certifies that the insurance carrier indicated above in box "3" insures the business referenced above in box "1a" for workers' compensation under the New York State Workers' Compensation Law. (To use this form, New York (NY) must be listed under Item 3A **on the INFORMATION PAGE of the workers' compensation insurance policy). The Insurance Carrier or its licensed agent will send** this Certificate of Insurance to the entity listed above as the certificate holder in box "2".

Will the carrier notify the certificate holder within 10 days of a policy being cancelled for non-payment of premium or within 30 days if cancelled for any other reason or if the insured is otherwise eliminated from the coverage indicated on this certificate prior to the end of the policy effective period? ☐YES ☒NO

This certificate is issued as a matter of information only and confers no rights upon the certificate holder. This certificate does not amend, extend or alter the coverage afforded by the policy listed, nor does it confer any rights or responsibilities beyond those contained in the referenced policy.

This certificate may be used as evidence of a Workers' Compensation contract of insurance only while the underlying policy is in effect.

Please Note: Upon cancellation of the workers' compensation policy indicated on this form, if the business continues to be named on a permit, license or contract issued by a certificate holder, the business must provide that certificate holder with a new Certificate of Workers' Compensation Coverage or other authorized proof that the business is complying with the mandatory coverage requirements of the New York State Workers' Compensation Law.

Under penalty of perjury, I certify that I am an authorized representative or licensed agent of the insurance carrier referenced above and that the named insured has the coverage as depicted on this form.

Approved by: John Forlivio
(Print name of authorized representative or licensed agent of insurance carrier)

Approved by: John O. Forlivio 10/29/2019
(Signature) (Date)

Title: Chief Executive Officer

Telephone Number of authorized representative or licensed agent of insurance carrier: 914-829-9077

Please Note: Only insurance carriers and their licensed agents are authorized to issue Form C-105.2. Insurance brokers are NOT authorized to issue it.

Workers' Compensation Law

Section 57. Restriction on issue of permits and the entering into contracts unless compensation is secured.

1. The head of a state or municipal department, board, commission or office authorized or required by law to issue any permit for or in connection with any work involving the employment of employees in a hazardous employment defined by this chapter, and notwithstanding any general or special statute requiring or authorizing the issue of such permits, shall not issue such permit unless proof duly subscribed by an insurance carrier is produced in a form satisfactory to the chair, that compensation for all employees has been secured as provided by this chapter. Nothing herein, however, shall be construed as creating any liability on the part of such state or municipal department, board, commission or office to pay any compensation to any such employee if so employed.

2. The head of a state or municipal department, board, commission or office authorized or required by law to enter into any contract for or in connection with any work involving the employment of employees in a hazardous employment defined by this chapter, notwithstanding any general or special statute requiring or authorizing any such contract, shall not enter into any such contract unless proof duly subs cribed by an insurance carrier is produced in a form satisfactory to the chair, that com pensation for all employees has been secured as provided by this chapter.

OFFICE OF THE COMPTROLLER, CITY OF NEW YORK
CONSTRUCTION WORKER PREVAILING WAGE SCHEDULE

LABOR LAW ARTICLE 8 - NYC PUBLIC WORKS

Workers, Laborers and Mechanics employed on a public work project must receive not less than the prevailing rate of wage and benefits for the classification of work performed by each upon such public work. Pursuant to Labor Law Article 8 the Comptroller of the City of New York has promulgated this schedule solely for Workers, Laborers and Mechanics engaged by private contractors on New York City public work projects. Prevailing rates are required to be annexed to and form part of the public work contract pursuant to § 220 (3).

This schedule is a compilation of separate determinations of the prevailing rate of wage and supplements made by the Comptroller for each trade classification listed herein pursuant to New York State Labor Law section § 220 (5). The source of the wage and supplement rates, whether a collective bargaining agreement, survey data or other, is listed at the end of each classification.

Agency Chief Contracting Officers should contact the Bureau of Labor Law's Classification Unit with any questions concerning trade classifications, prevailing rates or prevailing practices with respect to procurement on New York City public work contracts. Contractors are advised to review the Comptroller's Prevailing Wage Schedule before bidding on public work contracts. Contractors with questions concerning trade classifications, prevailing rates or prevailing practices with respect to public work contracts in the procurement stage must contact the contracting agency responsible for the procurement.

Any error as to compensation under the prevailing wage law or other information as to trade classification, made by the contracting agency in the contract documents or in any other communication, will not preclude a finding against the contractor of prevailing wage violation.

Any questions concerning trade classifications, prevailing rates or prevailing practices on New York City public work contracts that have already been awarded may be directed to the Bureau of Labor Law's Classification Unit by calling (212) 669-4443. All callers must have the agency name and contract registration number available when calling with questions on public work contracts. Please direct all other compliance issues to: Bureau of Labor Law, Attn: Wasyl Kinach, P.E., Office of the Comptroller, 1 Centre Street, Room 651, New York, N.Y. 10007; Fax (212) 669-4002.

The appropriate schedule of prevailing wages and benefits must be posted at all public work sites pursuant to Labor Law § 220 (3-a) (a).

This schedule is applicable to work performed during the effective period, unless otherwise noted. Changes to this schedule are published on our web site comptroller.nyc.gov/wages. Contractors must pay the wages and supplements in effect when the worker, laborer, mechanic performs the work. Preliminary schedules for future one-year periods appear in the City Record on or about June 1 each succeeding year. Final schedules appear on or about July 1 in the City Record and on our web site comptroller.nyc.gov/wages.

The Comptroller's Office has attempted to include all overtime, shift and night differential, Holiday, Saturday, Sunday or other premium time work. However, this schedule does not set forth every prevailing practice with respect to such rates with which employers must comply. All such practices are nevertheless part of the employer's prevailing wage obligation and contained in the collective bargaining agreements of the prevailing wage unions. These collective bargaining agreements are available for inspection by appointment. Requests for appointments may be made by calling (212) 669-4443, Monday through Friday between the hours of 9 a.m. and 5 p.m.

Prevailing rates and ratios for apprentices are published in the Construction Apprentice Prevailing Wage Schedule. Pursuant to Labor Law § 220 (3-e), only apprentices who are individually registered in a bona fide program to which the employer contractor is a participant, registered with the New York State Department of Labor, may be paid at the apprentice rates. Apprentices who are not so registered must be paid as journey persons.

New York City public work projects awarded pursuant to a Project Labor Agreement ("PLA") in accordance with Labor Law section 222 may have different labor standards for shift, premium and overtime work. Please refer to the PLA's pre-negotiated labor agreements for wage and benefit rates applicable to work performed outside of the regular workday. More information is available at the Mayor's Office of Contract Services (MOCS) web page at:
https://www1.nyc.gov/site/mocs/contract/project-labor-agreements.page

All the provisions of Labor Law Article 8 remain applicable to PLA work including, but not limited to, the enforcement of prevailing wage requirements by the Comptroller in accordance with the trade classifications in this schedule; however, we will enforce shift, premium, overtime and other non-standard rates as they appear in a project's pre-negotiated labor agreement.

In order to meet their obligation to provide prevailing supplemental benefits to each covered employee, employers must either:

1) Provide bona fide fringe benefits which cost the employer no less than the prevailing supplemental benefits rate; or
2) Supplement the employee's hourly wage by an amount no less than the prevailing supplemental benefits rate; or
3) Provide a combination of bona fide fringe benefits and wage supplements which cost the employer no less than the prevailing supplemental benefits rate in total.

Although prevailing wage laws do not require employers to provide bona fide fringe benefits (as opposed to wage supplements) to their employees, other laws may. For example, the Employee Retirement Income Security Act, 29 U.S.C. § 1001 et seq., the Patient Protection and Affordable Care Act, 42 U.S.C. § 18001 et seq., and the New York City Paid Sick Leave Law, N.Y.C. Admin. Code § 20-911 et seq., require certain employers to provide certain benefits to their employees. Labor agreements to which employers are a party may also require certain benefits. The Comptroller's Office does not enforce these laws or agreements.

Employers must provide prevailing supplemental benefits at the straight time rate for each hour worked unless otherwise noted in the classification.

Paid Holidays, Vacation and Sick Leave when listed must be paid or provided in addition to the prevailing hourly supplemental benefit rate.

For more information, please refer to the Comptroller's Prevailing Wage Law Regulations in Title 44 of the Rules of the City of New York, Chapter 2, available at comptroller.nyc.gov/wages.

Wasyl Kinach, P.E.
Director of Classifications
Bureau of Labor Law

TABLE OF CONTENTS

CLASSIFICATION	PAGE
ASBESTOS HANDLER	5
BLASTER	5
BOILERMAKER	6
BRICKLAYER	7
CARPENTER - BUILDING COMMERCIAL	8
CARPENTER - HEAVY CONSTRUCTION WORK	9
CARPENTER - HIGH RISE CONCRETE FORMS	10
CARPENTER - SIDEWALK SHED, SCAFFOLD AND HOIST	11
CEMENT & CONCRETE WORKER	11
CEMENT MASON	13
CORE DRILLER	13
DERRICKPERSON AND RIGGER	15
DIVER	16
DOCKBUILDER - PILE DRIVER	16
DRIVER: TRUCK (TEAMSTER)	17
ELECTRICIAN	19
ELECTRICIAN - ALARM TECHNICIAN	22
ELECTRICIAN-STREET LIGHTING WORKER	23
ELEVATOR CONSTRUCTOR	24
ELEVATOR REPAIR & MAINTENANCE	25
ENGINEER	26
ENGINEER - CITY SURVEYOR AND CONSULTANT	31
ENGINEER - FIELD (BUILDING CONSTRUCTION)	32
ENGINEER - FIELD (HEAVY CONSTRUCTION)	33
ENGINEER - FIELD (STEEL ERECTION)	34
ENGINEER - OPERATING	35
FLOOR COVERER	43
GLAZIER	44
GLAZIER - REPAIR & MAINTENANCE	44
HAZARDOUS MATERIAL HANDLER	45
HEAT AND FROST INSULATOR	46
HOUSE WRECKER	47
IRON WORKER - ORNAMENTAL	48
IRON WORKER - STRUCTURAL	49
LABORER	50
LANDSCAPING	51
MARBLE MECHANIC	52

MASON TENDER 53
MASON TENDER (INTERIOR DEMOLITION WORKER) 54
METALLIC LATHER 55
MILLWRIGHT 56
MOSAIC MECHANIC 57
PAINTER 58
PAINTER - METAL POLISHER 58
PAINTER - SIGN 60
PAINTER - STRIPER 60
PAINTER - STRUCTURAL STEEL 61
PAPERHANGER 62
PAVER AND ROADBUILDER 63
PLASTERER 65
PLASTERER - TENDER 66
PLUMBER 67
PLUMBER (MECHNICAL EQUIPMENT AND SERVICE) 68
PLUMBER (RESIDENTIAL RATES FOR 1, 2 AND 3 FAMILY HOME CONSTRUCTION) 68
PLUMBER: PUMP & TANK 69
POINTER, WATERPROOFER, CAULKER, SANDBLASTER, STEAMBLASTER 70
ROOFER 71
SHEET METAL WORKER 72
SHEET METAL WORKER - SPECIALTY 73
SHIPYARD WORKER 74
SIGN ERECTOR 75
STEAMFITTER 76
STEAMFITTER - REFRIGERATION AND AIR CONDITIONER 78
STONE MASON - SETTER 80
TAPER 80
TELECOMMUNICATION WORKER 81
TILE FINISHER 82
TILE LAYER - SETTER 83
TIMBERPERSON 84
TUNNEL WORKER 85
WELDER 87

ASBESTOS HANDLER
SEE HAZARDOUS MATERIAL HANDLER

BLASTER

Blaster

Effective Period: 7/1/2018 - 6/30/2019
Wage Rate per Hour: $55.21
Supplemental Benefit Rate per Hour: $42.53

Blaster- Hydraulic Trac Drill

Effective Period: 7/1/2018 - 6/30/2019
Wage Rate per Hour: $49.35
Supplemental Benefit Rate per Hour: $42.53

Blaster - Wagon: Air Trac: Quarry Bar: Drillrunners

Effective Period: 7/1/2018 - 6/30/2019
Wage Rate per Hour: $48.52
Supplemental Benefit Rate per Hour: $42.53

Blaster - Journeyperson

(Laborer, Chipper/Jackhammer including Walk Behind Self Propelled Hydraulic Asphalt and Concrete Breakers and Hydro (Water) Demolition, Powder Carrier, Hydraulic Chuck Tender, Chuck Tender and Nipper)

Effective Period: 7/1/2018 - 6/30/2019
Wage Rate per Hour: $42.00
Supplemental Benefit Rate per Hour: $42.53

Blaster - Magazine Keepers: (Watch Person)

Effective Period: 7/1/2018 - 6/30/2019
Wage Rate per Hour: $21.00
Supplemental Benefit Rate per Hour: $42.53

Overtime
Time and one half the regular rate after an 8 hour day.
Time and one half the regular rate for Saturday.
Double time the regular rate for Sunday.

Overtime Holidays

Double time the regular rate for work on the following holiday(s).
New Year's Day
Memorial Day
Independence Day
Labor Day
Columbus Day
Thanksgiving Day
Christmas Day

Paid Holidays

Labor Day
Thanksgiving Day

Shift Rates

When two shifts are employed, single time rate shall be paid for each shift. When three shifts are found necessary, each shift shall work seven and one half hours (7 ½), but shall be paid for eight (8) hours of labor, and be permitted one half hour for lunch.

(Local #731)

BOILERMAKER

Boilermaker

Effective Period: 7/1/2018 - 6/30/2019
Wage Rate per Hour: $57.17
Supplemental Benefit Rate per Hour: $43.62
Supplemental Note: For time and one half overtime - $64.81 For double overtime - $86.00

Overtime Description

For Repair and Maintenance work:
Time and one half the regular rate after an 8 hour day.
Time and one half the regular rate for Saturday.
Double time the regular rate for Sunday.
For New Construction work:
Double time the regular rate after an 8 hour day.
Double time the regular time rate for Saturday.
Double time the regular rate for Sunday.

Overtime Holidays

Double time the regular rate for work on the following holiday(s).
New Year's Day
President's Day
Memorial Day
Independence Day

Columbus Day
Election Day
Veteran's Day
Thanksgiving Day
Christmas Day

Quadruple time the regular rate for work on the following holiday(s).
Labor Day

Paid Holidays

Good Friday
Day after Thanksgiving
Day before Christmas
Day before New Year's Day

Shift Rates

When shifts are required, the first shift shall work eight (8) hours at the regular straight-time hourly rate. The second shift shall work seven and one-half (7 ½) hours and receive eight hours at the regular straight time hourly rate plus twenty-five cents ($0.25) per hour. The third shift shall work seven (7) hours and receive eight hours at the regular straight time hourly rate plus fifty cents ($0.50) per hour. A thirty (30) minute lunch period shall not be considered as time worked. Work in excess of the above shall be paid overtime at the appropriate new construction work or repair work overtime wage and supplemental benefit hourly rate.

(Local #5)

BRICKLAYER

Bricklayer

Effective Period: 7/1/2018 - 6/30/2019
Wage Rate per Hour: $55.10
Supplemental Benefit Rate per Hour: $31.20

Overtime

Time and one half the regular rate after a 7 hour day.
Time and one half the regular rate for Saturday.
Double time the regular rate for Sunday.
Saturday may be used as a make-up day at straight time when a day is lost during that week to inclement weather.

Overtime Holidays

Double time the regular rate for work on the following holiday(s).
New Year's Day
President's Day
Memorial Day
Independence Day
Labor Day

Thanksgiving Day
Christmas Day

Paid Holidays
None

Shift Rates
Overtime rates to be paid outside the regular scheduled work day.

(Bricklayer District Council)

CARPENTER - BUILDING COMMERCIAL

Building Commercial

Effective Period: 7/1/2018 - 6/30/2019
Wage Rate per Hour: $52.50
Supplemental Benefit Rate per Hour: $46.28

Overtime
Time and one half the regular rate after an 8 hour day.
Time and one half the regular rate for Saturday.
Double time the regular rate for Sunday.
Saturday may be used as a make-up day at straight time when a day is lost during that week to inclement weather.

Overtime Holidays
Double time the regular rate for work on the following holiday(s).
New Year's Day
Washington's Birthday
Memorial Day
Independence Day
Labor Day
Columbus Day
Presidential Election Day
Thanksgiving Day
Day after Thanksgiving
Christmas Day

Paid Holidays
None

Shift Rates
The employer may work two (2) shifts with the first shift at the straight time wage rate starting at the established time between 7 a.m. and 9 a.m. The second shift will receive one hour at the double time rate of pay for the last hour of the shift; eight (8) hours pay for seven (7) hours of work, nine (9) hours pay for eight (8) hours of work.

When it is not possible to conduct alteration work during regular working hours in a building occupied by tenants, the rule for the second shift will apply.

(Carpenters District Council)

CARPENTER - HEAVY CONSTRUCTION WORK
(Construction of Engineering Structures and Building Foundations)

Heavy Construction Work

Effective Period: 7/1/2018 - 6/30/2019
Wage Rate per Hour: $53.63
Supplemental Benefit Rate per Hour: $50.67

Overtime
Time and one half the regular rate after an 8 hour day.
Time and one half the regular rate for Saturday.
Double time the regular rate for Sunday.
Saturday may be used as a make-up day at straight time when a day is lost during that week to inclement weather.

Overtime Holidays
Double time the regular rate for work on the following holiday(s).
New Year's Day
President's Day
Memorial Day
Independence Day
Labor Day
Columbus Day
Presidential Election Day
Thanksgiving Day
Christmas Day

Paid Holidays
None

Shift Rates
Off shift work commencing between 5:00 P.M. and 11:00 P.M. shall work eight and one half hours allowing for one half hour for lunch. The wage rate shall be 113% of the straight time hourly wage rate.

(Carpenters District Council)

CARPENTER - HIGH RISE CONCRETE FORMS
(Excludes Engineering Structures and Building Foundations)

Carpenter High Rise A

Effective Period: 7/1/2018 - 6/30/2019
Wage Rate per Hour: $50.78
Supplemental Benefit Rate per Hour: $43.34

Carpenter High Rise B

Carpenter High Rise B worker is excluded from high risk operations such as erection decking, perimeter debris netting, leading edge work, self-climbing form systems, and the installation of cocoon systems unless directly supervised by a Carpenter High Rise A worker.

Effective Period: 7/1/2018 - 6/30/2019
Wage Rate per Hour: $40.19
Supplemental Benefit Rate per Hour: $16.65

Overtime
Time and one half the regular rate after an 8 hour day.
Time and one half the regular rate for Saturday.
Double time the regular rate for Sunday.
Saturday may be used as a make-up day at straight time when a day is lost during that week to inclement weather.

Overtime Holidays
Time and one half the regular rate for work on the following holiday(s).
New Year's Day
President's Day
Good Friday
Memorial Day
Independence Day
Labor Day
Columbus Day
Presidential Election Day
Thanksgiving Day
Christmas Day

Paid Holidays
None

Shift Rates
The second shift wage rate shall be 113% of the straight time hourly wage rate. There must be a first shift in order to work a second shift.

(Carpenters District Council)

CARPENTER - SIDEWALK SHED, SCAFFOLD AND HOIST

Carpenter - Hod Hoist

(Assisted by Mason Tender)

Effective Period: 7/1/2018 - 6/30/2019
Wage Rate per Hour: $50.50
Supplemental Benefit Rate per Hour: $39.46

Overtime
Time and one half the regular rate after an 8 hour day.
Time and one half the regular rate for Saturday.
Double time the regular rate for Sunday.
Saturday may be used as a make-up day at straight time when a day is lost during that week to inclement weather.

Overtime Holidays
Double time the regular rate for work on the following holiday(s).
New Year's Day
President's Day
Memorial Day
Independence Day
Labor Day
Columbus Day
Presidential Election Day
Thanksgiving Day
Day after Thanksgiving
Christmas Day

Paid Holidays
None

Shift Rates
The second shift will receive one hour at the double time rate of pay for the last hour of the shift; eight hours pay for seven hours of work, nine hours pay for eight hours of work. There must be a first shift in order to work a second shift.

(Carpenters District Council)

CEMENT & CONCRETE WORKER

Cement & Concrete Worker

Effective Period: 7/1/2018 - 6/30/2019
Wage Rate per Hour: $42.48
Supplemental Benefit Rate per Hour: $26.00
Supplemental Note: $29.50 on Saturdays; $33.00 on Sundays & Holidays

Cement & Concrete Worker - (Hired after 2/6/2016)

Effective Period: 7/1/2018 - 6/30/2019
Wage Rate per Hour: $32.00
Supplemental Benefit Rate per Hour: $18.00
Supplemental Note: $19.50 on Saturdays; $21.00 on Sundays & Holidays

Overtime Description
Time and one half the regular rate after 7 hour day (time and one half the regular rate after an 8 hour day when working with Dockbuilders on pile cap forms and for work below street level to the top of the foundation wall, not to exceed 2 feet or 3 feet above the sidewalk-brick shelf, when working on the foundation and structure.)

Overtime
Time and one half the regular rate for Saturday.
Double time the regular rate for Sunday.

Overtime Holidays
Double time the regular rate for work on the following holiday(s).
New Year's Day
President's Day
Good Friday
Memorial Day
Independence Day
Labor Day
Columbus Day
Presidential Election Day
Thanksgiving Day
Christmas Day

Paid Holidays
1/2 day before Christmas Day
1/2 day before New Year's Day

Shift Rates
On shift work extending over a twenty-four hour period, all shifts are paid at straight time.

(Cement Concrete Workers District Council)

CEMENT MASON

Cement Mason

Effective Period: 7/1/2018 - 6/30/2019
Wage Rate per Hour: $43.97
Supplemental Benefit Rate per Hour: $39.71
Supplemental Note: Supplemental benefit contributions are to be made at the applicable overtime rates.

Overtime Description
Time and one-half the regular rate after an 8 hour day, double time the regular rate after 10 hours. Time and one-half the regular rate on Saturday, double time the regular rate after 10 hours. Double time the regular rate on Sunday.

Overtime Holidays
Double time the regular rate for work on the following holiday(s).
New Year's Day
President's Day
Good Friday
Memorial Day
Independence Day
Labor Day
Columbus Day
Presidential Election Day
Thanksgiving Day
Christmas Day

Paid Holidays
Any worker who reports to work on Christmas Eve or New Year's Eve pursuant to his employer's instruction shall be entitled to three (3) hours afternoon pay without working.

Shift Rates
For an off shift day, (work at times other than the regular 7:00 A.M. to 3:30 P.M. work day) a cement mason shall be paid at the regular hourly rate plus a 25% per hour differential. Four Days a week at Ten (10)hour day.

(Local #780) (BCA)

CORE DRILLER

Core Driller

Effective Period: 7/1/2018 - 6/30/2019
Wage Rate per Hour: $39.69
Supplemental Benefit Rate per Hour: $25.45

Core Driller Helper

Effective Period: 7/1/2018 - 6/30/2019
Wage Rate per Hour: $31.62
Supplemental Benefit Rate per Hour: $25.45

Core Driller Helper(Third year in the industry)

Effective Period: 7/1/2018 - 6/30/2019
Wage Rate per Hour: $28.46
Supplemental Benefit Rate per Hour: $25.45

Core Driller Helper (Second year in the industry)

Effective Period: 7/1/2018 - 6/30/2019
Wage Rate per Hour: $25.30
Supplemental Benefit Rate per Hour: $25.45

Core Driller Helper (First year in the industry)

Effective Period: 7/1/2018 - 6/30/2019
Wage Rate per Hour: $22.13
Supplemental Benefit Rate per Hour: $25.45

Overtime Description
Time and one half the regular rate for work on a holiday plus Holiday pay when worked.

Overtime
Time and one half the regular rate after an 8 hour day.
Time and one half the regular rate for Saturday.
Double time the regular rate for Sunday.
Time and one half the regular rate for work on the following holiday(s).

Paid Holidays
New Year's Day
Memorial Day
Independence Day
Labor Day
Thanksgiving Day
Christmas Day

Shift Rates
The shift day shall be the continuous eight and one-half (8½) hours from 6:00 A.M. to 2:30 P.M. and from 2:30 P.M. to 11:00 P.M., including one-half (½) hour of employees regular rate of pay for lunch. When two (2) or more shifts are employed, single time shall be paid for each shift, but those employees employed on a shift other than from 8:00 A.M. to 5:00 P.M. shall, in addition, receive seventy-five cents ($0.75) per hour differential for each hour worked. When three (3) shifts are needed, each shift shall work seven and one-half (7 ½) hours paid for eight (8) hours of labor and be permitted one-half (½) hour for mealtime.

(Carpenters District Council)

DERRICKPERSON AND RIGGER

Derrick Person & Rigger

Effective Period: 7/1/2018 - 6/30/2019
Wage Rate per Hour: $46.86
Supplemental Benefit Rate per Hour: $51.40
Supplemental Note: The above supplemental rate applies for work performed in Manhattan, Bronx, Brooklyn and Queens. $52.82 - For work performed in Staten Island.

Derrick Person & Rigger - Site Work

Assists the Stone Mason-Setter in the setting of stone

Effective Period: 7/1/2018 - 6/30/2019
Wage Rate per Hour: $40.29
Supplemental Benefit Rate per Hour: $39.23

Overtime Description
The first two hours of overtime on weekdays and the first seven hours of work on Saturdays are paid at time and one half for wages and supplemental benefits. All additional overtimes is paid at double time for wages and supplemental benefits. Deduct $1.42 from the Staten Island hourly benefits rate before computing overtime.

Overtime
Double time the regular rate for Sunday.

Overtime Holidays
Double time the regular rate for work on the following holiday(s).
New Year's Day
Washington's Birthday
Good Friday
Memorial Day
Independence Day
Labor Day
Thanksgiving Day
Christmas Day

Paid Holidays
1/2 day on Christmas Eve if work is performed in the A.M.

(Local #197)

DIVER

Diver (Marine)

Effective Period: 7/1/2018 - 6/30/2019
Wage Rate per Hour: $67.94
Supplemental Benefit Rate per Hour: $50.67

Diver Tender (Marine)

Effective Period: 7/1/2018 - 6/30/2019
Wage Rate per Hour: $48.24
Supplemental Benefit Rate per Hour: $50.67

Overtime

Time and one half the regular rate after an 8 hour day.
Time and one half the regular rate for Saturday.
Double time the regular rate for Sunday.
Saturday may be used as a make-up day at straight time when a day is lost during that week to inclement weather.

Overtime Holidays

Double time the regular rate for work on the following holiday(s).
New Year's Day
President's Day
Memorial Day
Independence Day
Labor Day
Columbus Day
Presidential Election Day
Thanksgiving Day
Christmas Day

Paid Holidays

None

Shift Rates

When three shifts are utilized each shift shall work seven and one half-hours (7 1/2 hours) and paid for 8 hours, allowing for one half hour for lunch.

(Carpenters District Council)

DOCKBUILDER - PILE DRIVER

Dockbuilder - Pile Driver

Effective Period: 7/1/2018 - 6/30/2019
Wage Rate per Hour: $53.63
Supplemental Benefit Rate per Hour: $50.67

Overtime
Time and one half the regular rate after an 8 hour day.
Time and one half the regular rate for Saturday.
Double time the regular rate for Sunday.
Saturday may be used as a make-up day at straight time when a day is lost during that week to inclement weather.

Overtime Holidays
Double time the regular rate for work on the following holiday(s).
New Year's Day
President's Day
Memorial Day
Independence Day
Labor Day
Columbus Day
Presidential Election Day
Thanksgiving Day
Christmas Day

Paid Holidays
None

Shift Rates
Off shift work commencing between 5:00 P.M. and 11:00 P.M. shall work eight and one half hours allowing for one half hour for lunch. The wage rate shall be 113% of the straight time hourly wage rate.

(Carpenters District Council)

DRIVER: TRUCK (TEAMSTER)

Driver - Dump Truck

Effective Period: 7/1/2018 - 6/30/2019
Wage Rate per Hour: $41.18
Supplemental Benefit Rate per Hour: $47.22
Supplemental Note: Over 40 hours worked: at time and one half rate - $20.58; at double time rate - $27.44

Driver - Tractor Trailer

Effective Period: 7/1/2018 - 6/30/2019

Wage Rate per Hour: $42.97
Supplemental Benefit Rate per Hour: $47.15
Supplemental Note: Over 40 hours worked: at time and one half rate - $18.30; at double time rate - $24.41

Driver - Euclid & Turnapull Operator

Effective Period: 7/1/2018 - 6/30/2019
Wage Rate per Hour: $43.53
Supplemental Benefit Rate per Hour: $47.15
Supplemental Note: Over 40 hours worked: at time and one half rate - $18.30 at double time rate - $24.41

Overtime Description
For Paid Holidays: Holiday pay for all holidays shall be prorated based two hours per day for each day worked in the holiday week, not to exceed 8 hours of holiday pay. For Thanksgiving week, the prorated share shall be 5 1/3 hours of holiday pay for each day worked in Thanksgiving week.

Overtime
Time and one half the regular rate after an 8 hour day.
Time and one half the regular rate for Saturday.
Double time the regular rate for Sunday.

Overtime Holidays
Double time the regular rate for work on the following holiday(s).
New Year's Day
President's Day
Memorial Day
Independence Day
Labor Day
Columbus Day
Veteran's Day
Thanksgiving Day
Day after Thanksgiving
Christmas Day

Paid Holidays
New Year's Day
President's Day
Memorial Day
Independence Day
Labor Day
Columbus Day
Veteran's Day
Thanksgiving Day
Day after Thanksgiving
Christmas Day

Shift Rates
Off single shift work commencing between 6:00 P.M. and 5:00 A.M. shall work eight and one half (8 1/2) hours allowing for one half hour for lunch and be paid 117.3% of the straight time hourly wage rate.

Driver Redi-Mix (Sand & Gravel)

Effective Period: 7/1/2018 - 6/30/2019
Wage Rate per Hour: $38.40
Supplemental Benefit Rate per Hour: $44.12
Supplemental Note: Over 40 hours worked: time and one half rate $15.99, double time rate $21.33

Overtime Description
For Paid Holidays: Employees working two (2) days in the calendar week in which the holiday falls are to paid for these holidays, provided they shape each remaining workday during that calendar week.

Overtime
Time and one half the regular rate after an 8 hour day.
Time and one half the regular rate for Saturday.
Double time the regular rate for Sunday.

Overtime Holidays
Double time the regular rate for work on the following holiday(s).
President's Day
Columbus Day
Veteran's Day

Triple time the regular rate for work on the following holiday(s).
New Year's Day
Memorial Day
Independence Day
Labor Day
Thanksgiving Day
Christmas Day

Paid Holidays
New Year's Day
President's Day
Memorial Day
Independence Day
Labor Day
Columbus Day
Election Day
Thanksgiving Day
Christmas Day

(Local #282)

ELECTRICIAN
(Including installation of low voltage cabling carrying data, video and/or voice on building construction/alteration/renovation projects.)

Electrician "A" (Regular Day / Day Shift)

Effective Period: 7/1/2018 - 6/30/2019
Wage Rate per Hour: $56.00
Supplemental Benefit Rate per Hour: $55.72

Electrician "A" (Regular Day Overtime after 7 hrs / Day Shift Overtime after 8 hrs)

Effective Period: 7/1/2018 - 6/30/2019
Wage Rate per Hour: $84.00
Supplemental Benefit Rate per Hour: $59.23

Electrician "A" (Swing Shift)

Effective Period: 7/1/2018 - 6/30/2019
Wage Rate per Hour: $65.71
Supplemental Benefit Rate per Hour: $63.52

Electrician "A" (Swing Shift Overtime After 7.5 hours)

Effective Period: 7/1/2018 - 6/30/2019
Wage Rate per Hour: $98.57
Supplemental Benefit Rate per Hour: $67.64

Electrician "A" (Graveyard Shift)

Effective Period: 7/1/2018 - 6/30/2019
Wage Rate per Hour: $73.60
Supplemental Benefit Rate per Hour: $70.09

Electrician "A" (Graveyard Shift Overtime After 7 hours)

Effective Period: 7/1/2018 - 6/30/2019
Wage Rate per Hour: $110.40
Supplemental Benefit Rate per Hour: $74.70

Overtime

Time and one half the regular rate after a 7 hour day.
Time and one half the regular rate for Saturday.
Time and one half the regular rate for Sunday.

Overtime Holidays

Time and one half the regular rate for work on a holiday.
New Year's Day
Martin Luther King Jr. Day
President's Day
Memorial Day

Independence Day
Labor Day
Columbus Day
Veteran's Day
Thanksgiving Day
Day after Thanksgiving
Christmas Day

Paid Holidays

None

Shift Rates

When so elected by the Employer, one or more shifts of at least five days duration may be scheduled as follows: Day Shift: 8:00 am to 4:30 pm, Swing Shift 4:30 pm to 12:30 am, Graveyard Shift: 12:30 am to 8:00 am.

For multiple shifts of temporary light and/or power, the temporary light and/or power employee shall be paid for 8 hours at the straight time rate. For three or less workers performing 8 hours temporary light and/or power the supplemental benefit rate is $25.92.

Electrician "M" (First 8 hours)

"M" rated work shall be defined as jobbing: electrical work of limited duration and scope, also consisting of repairs and/or replacement of electrical and tele-data equipment. Includes all work necessary to retrofit, service, maintain and repair all kinds of lighting fixtures and local lighting controls and washing and cleaning of foregoing fixtures.

Effective Period: 7/1/2018 - 6/30/2019
Wage Rate per Hour: $29.00
Supplemental Benefit Rate per Hour: $22.65
First and Second Year "M" Wage Rate Per Hour: $24.50
First and Second Year "M" Supplemental Rate: $20.30

Electrician "M" (Overtime After First 8 hours)

"M" rated work shall be defined as jobbing: electrical work of limited duration and scope, also consisting of repairs and/or replacement of electrical and tele-data equipment. Includes all work necessary to retrofit, service, maintain and repair all kinds of lighting fixtures and local lighting controls and washing and cleaning of foregoing fixtures.

Effective Period: 7/1/2018 - 6/30/2019
Wage Rate per Hour: $43.50
Supplemental Benefit Rate per Hour: $24.47
First and Second Year "M" Wage Rate Per Hour: $36.75
First and Second Year "M" Supplemental Rate: $21.84

Overtime

Time and one half the regular rate after an 8 hour day.
Time and one half the regular rate for Saturday.
Time and one half the regular rate for Sunday.

Overtime Holidays

Time and one half the regular rate for work on the following holiday(s).
New Year's Day
Martin Luther King Jr. Day
President's Day
Memorial Day
Independence Day
Labor Day
Columbus Day
Veteran's Day
Thanksgiving Day
Day after Thanksgiving
Christmas Day

Paid Holidays

None

(Local #3)

ELECTRICIAN - ALARM TECHNICIAN

(Scope of Work - Inspect, test, repair, and replace defective, malfunctioning, or broken devices, components and controls of Fire, Burglar and Security Systems)

Alarm Technician

Effective Period: 7/1/2018 - 3/9/2019
Wage Rate per Hour: $32.90
Supplemental Benefit Rate per Hour: $16.82
Supplemental Note: $15.32 only after 8 hours worked in a day

Effective Period: 3/10/2019 - 6/30/2019
Wage Rate per Hour: $33.40
Supplemental Benefit Rate per Hour: $17.68
Supplemental Note: $16.06 only after 8 hours worked in a day

Overtime Description

Time and one half the regular rate for work on the following holidays: Columbus Day, Veterans Day, Day after Thanksgiving.
Double time the regular rate for work on the following holidays: New Year's day, Martin Luther King Jr. Day, President's Day, Memorial Day, Independence Day, Labor Day, Thanksgiving Day, Christmas Day.

Overtime

Time and one half the regular rate after an 8 hour day.

Time and one half the regular rate for Saturday.
Double time the regular rate for Sunday.

Paid Holidays

New Year's Day
Martin Luther King Jr. Day
President's Day
Memorial Day
Independence Day
Labor Day
Columbus Day
Veteran's Day
Thanksgiving Day
Day after Thanksgiving
Christmas Day

Shift Rates

Night Differential is based upon a ten percent (10%) differential between the hours of 4:00 P.M. and 12:30 A.M. and a fifteen percent (15%) differential for the hours 12:00 A.M. to 8:00 A.M.

Vacation

At least 1 year of employment.....ten (10) days
5 years or more of employment.....fifteen (15) days
10 years of employment.....twenty (20) days
Plus one Personal Day per year

Sick Days:
One day per Year. Up to 4 vacation days may be used as sick days.

(Local #3)

ELECTRICIAN-STREET LIGHTING WORKER

Electrician - Electro Pole Electrician

Effective Period: 7/1/2018 - 6/30/2019
Wage Rate per Hour: $56.00
Supplemental Benefit Rate per Hour: $57.63

Electrician - Electro Pole Foundation Installer

Effective Period: 7/1/2018 - 6/30/2019
Wage Rate per Hour: $42.16
Supplemental Benefit Rate per Hour: $42.19

Electrician - Electro Pole Maintainer

Effective Period: 7/1/2018 - 6/30/2019
Wage Rate per Hour: $36.11
Supplemental Benefit Rate per Hour: $37.93

Overtime Description

Electrician - Electro Pole Electrician: Time and one half the regular rate after a 7 hour day and after 5 consecutive days worked per week.
Electrician - Electro Pole Foundation Installer: Time and one half the regular rate after 8 hours within a 24 hour period and Saturday and Sunday.
Electrician - Electro Pole Maintainer: Time and one half the regular rate after a 7 hour day and after 5 consecutive days worked per week. Saturdays and Sundays may be used as a make-up day at straight time when a day is lost during the week to inclement weather.

Overtime Holidays

Time and one half the regular rate for work on the following holiday(s).
New Year's Day
Martin Luther King Jr. Day
President's Day
Memorial Day
Independence Day
Labor Day
Columbus Day
Veteran's Day
Thanksgiving Day
Day after Thanksgiving
Christmas Day

Paid Holidays

None

(Local #3)

ELEVATOR CONSTRUCTOR

Elevator Constructor

Effective Period: 7/1/2018 - 6/30/2019
Wage Rate per Hour: $64.48
Supplemental Benefit Rate per Hour: $35.80

Overtime Description

For New Construction: work performed after 7 or 8 hour day, Saturday, Sunday or between 4:30pm and 7:00am shall be paid at double time rate.

Existing buildings: work performed after an 8 hour day, Saturday, Sunday or between 5:30pm and 7:00 am shall be paid time and one half.

Overtime
Double time the regular rate for work on the following holiday(s).

Paid Holidays
New Year's Day
President's Day
Good Friday
Memorial Day
Independence Day
Labor Day
Columbus Day
Veteran's Day
Thanksgiving Day
Day after Thanksgiving
Christmas Day

Vacation
Employer contributes 8% of regular basic hourly rate as vacation pay for employees with more than 15 years of service, and 6% for employees with 5 to 15 years of service, and 4% for employees with less than 5 years of service.

(Local #1)

ELEVATOR REPAIR & MAINTENANCE

Elevator Service/Modernization Mechanic

Effective Period: 7/1/2018 - 6/30/2019
Wage Rate per Hour: $50.49
Supplemental Benefit Rate per Hour: $35.65

Overtime Description
For Scheduled Service Work: Double time - work scheduled in advance by two or more workers performed on Sundays, Holidays, and between midnight and 7:00am.

Overtime
Time and one half the regular rate after an 8 hour day.
Time and one half the regular rate for Saturday.
Time and one half the regular rate for Sunday.
Time and one half the regular rate for work on a holiday plus the day's pay.

Paid Holidays
New Year's Day
President's Day
Good Friday
Memorial Day
Independence Day
Labor Day

Columbus Day
Veteran's Day
Thanksgiving Day
Day after Thanksgiving
Christmas Day

Shift Rates

Afternoon shift - regularly hourly rate plus a (15%) fifteen percent differential. Graveyard shift - time and one half the regular rate.

Vacation

Employer contributes 8% of regular basic hourly rate as vacation pay for employees with more than 15 years of service, and 6% for employees with 5 to 15 years of service, and 4% for employees with less than 5 years of service.

(Local #1)

ENGINEER

Engineer - Heavy Construction Operating Engineer I

Cherrypickers 20 tons and over and Loaders (rubber tired and/or tractor type with a manufacturer's minimum rated capacity of six cubic yards and over).

Effective Period: 7/1/2018 - 6/30/2019
Wage Rate per Hour: $68.99
Supplemental Benefit Rate per Hour: $38.28
Supplemental Note: $69.16 on overtime
Shift Wage Rate: $110.38

Engineer - Heavy Construction Operating Engineer II

Backhoes, Basin Machines, Groover, Mechanical Sweepers, Bobcat, Boom Truck, Barrier Transport (Barrier Mover) & machines of similar nature. Operation of Churn Drills and machines of a similar nature, Stetco Silent Hoist and machines of similar nature, Vac-Alls, Meyers Machines, John Beam and machines of a similar nature, Ross Carriers and Travel Lifts and machines of a similar nature, Bulldozers, Scrapers and Turn-a-Pulls: Tugger Hoists (Used exclusively for handling excavated material); Tractors with attachments, Hyster and Roustabout Cranes, Cherrypickers. Austin Western, Grove and machines of a similar nature, Scoopmobiles, Monorails, Conveyors, Trenchers: Loaders-Rubber Tired and Tractor: Barber Greene and Eimco Loaders and Eimco Backhoes; Mighty Midget and similar breakers and Tampers, Curb and Gutter Pavers and Motor Patrol, Motor Graders and all machines of a similar nature. Locomotives 10 Tons or under. Mini-Max, Break-Tech and machines of a similar nature; Milling machines, robotic and demolition machines and machines of a similar nature, shot blaster, skid steer machines and machines of a similar nature including bobcat, pile rig rubber-tired excavator (37,000 lbs. and under), 2 man auger.

Effective Period: 7/1/2018 - 6/30/2019
Wage Rate per Hour: $66.92
Supplemental Benefit Rate per Hour: $38.28

Supplemental Note: $69.16 on overtime
Shift Wage Rate: $107.07

Engineer - Heavy Construction Operating Engineer III

Minor Equipment such as Tractors, Post Hole Diggers, Ditch Witch (Walk Behind), Road Finishing Machines, Rollers five tons and under, Tugger Hoists, Dual Purpose Trucks, Fork Lifts, and Dempsey Dumpers, Fireperson.

Effective Period: 7/1/2018 - 6/30/2019
Wage Rate per Hour: $63.44
Supplemental Benefit Rate per Hour: $38.28
Supplemental Note: $69.16 on overtime
Shift Wage Rate: $101.50

Engineer - Heavy Construction Maintenance Engineer I

Installing, Repairing, Maintaining, Dismantling and Manning of all equipment including Steel Cutting, Bending and Heat Sealing Machines, Mechanical Heaters, Grout Pumps, Bentonite Pumps & Plants, Screening Machines, Fusion Coupling Machines, Tunnel Boring Machines Moles and Machines of a similar nature, Power Packs, Mechanical Hydraulic Jacks; all drill rigs including but not limited to Churn, Rotary Caisson, Raised Bore & Drills of a similar nature; Personnel, Inspection & Safety Boats or any boats used to perform functions of same, Mine Hoists, Whirlies, all Climbing Cranes, all Tower Cranes, including but not limited to Truck Mounted and Crawler Type and machines of similar nature; Maintaining Hydraulic Drills and machines of a similar nature; Well Point System-Installation and dismantling; Burning, Welding, all Pumps regardless of size and/or motor power, except River Cofferdam Pumps and Wells Point Pumps; Motorized Buggies (three or more); equipment used in the cleaning and televising of sewers, but not limited to jet-rodder/vacuum truck, vacall/vactor, closed circuit television inspection equipment; high powered water pumps, jet pumps; screed machines and concrete finishing machines of a similar nature; vermeers.

Effective Period: 7/1/2018 - 6/30/2019
Wage Rate per Hour: $66.60
Supplemental Benefit Rate per Hour: $38.28
Supplemental Note: $69.16 on overtime
Shift Wage Rate: $106.56

Engineer - Heavy Construction Maintenance Engineer II

On Base Mounted Tower Cranes

Effective Period: 7/1/2018 - 6/30/2019
Wage Rate per Hour: $87.74
Supplemental Benefit Rate per Hour: $38.28
Supplemental Note: $69.16 on overtime
Shift Wage Rate: $140.38

Engineer - Heavy Construction Maintenance Engineer III

On Generators, Light Towers

Effective Period: 7/1/2018 - 6/30/2019
Wage Rate per Hour: $43.66

Supplemental Benefit Rate per Hour: $38.28
Supplemental Note: $69.16 on overtime
Shift Wage Rate: $69.86

Engineer - Heavy Construction Maintenance Engineer IV

On Pumps and Mixers including mud sucking

Effective Period: 7/1/2018 - 6/30/2019
Wage Rate per Hour: $44.82
Supplemental Benefit Rate per Hour: $38.28
Supplemental Note: $69.16 on overtime
Shift Wage Rate: $71.71

Engineer - Heavy Construction Oilers I

Gradalls, Cold Planer Grader, Concrete Pumps, Driving Truck Cranes, Driving and Operating Fuel and Grease Trucks.

Effective Period: 7/1/2018 - 6/30/2019
Wage Rate per Hour: $59.97
Supplemental Benefit Rate per Hour: $38.28
Supplemental Note: $69.16 on overtime
Shift Wage Rate: $95.95

Engineer - Heavy Construction Oilers II

All gasoline, electric, diesel or air operated Shovels, Draglines, Backhoes, Keystones, Pavers, Gunite Machines, Battery of Compressors, Crawler Cranes, two-person Trenching Machines.

Effective Period: 7/1/2018 - 6/30/2019
Wage Rate per Hour: $41.22
Supplemental Benefit Rate per Hour: $38.28
Supplemental Note: $69.16 on overtime
Shift Wage Rate: $65.95

Engineer - Steel Erection Maintenance Engineers

Derrick, Travelers, Tower, Crawler Tower and Climbing Cranes

Effective Period: 7/1/2018 - 6/30/2019
Wage Rate per Hour: $63.75
Supplemental Benefit Rate per Hour: $38.28
Supplemental Note: $69.16 on overtime
Shift Wage Rate: $102.00

Engineer - Steel Erection Oiler I

On a Truck Crane

Effective Period: 7/1/2018 - 6/30/2019
Wage Rate per Hour: $59.61
Supplemental Benefit Rate per Hour: $38.28
Supplemental Note: $69.16 on overtime
Shift Wage Rate: $95.38

Engineer - Steel Erection Oiler II

On a Crawler Crane

Effective Period: 7/1/2018 - 6/30/2019
Wage Rate per Hour: $45.16
Supplemental Benefit Rate per Hour: $38.28
Supplemental Note: $69.16 on overtime
Shift Wage Rate: $72.26

Overtime Description
On jobs of more than one shift, if the next shift employee fails to report for work through any cause over which the employer has no control, the employee on duty who works the next shift continues to work at the single time rate.

Overtime
Double time the regular rate after an 8 hour day.
Double time the regular time rate for Saturday.
Double time the regular rate for Sunday.
Double time the regular rate for work on the following holiday(s).

Paid Holidays
New Year's Day
Lincoln's Birthday
President's Day
Memorial Day
Independence Day
Labor Day
Columbus Day
Veteran's Day
Thanksgiving Day
Day after Thanksgiving
Christmas Day
Employees must work at least one day in the payroll week in which the holiday occurs to receive the paid holiday

---

Engineer - Building Work Maintenance Engineers I

Installing, repairing, maintaining, dismantling (of all equipment including: Steel Cutting and Bending Machines, Mechanical Heaters, Mine Hoists, Climbing Cranes, Tower Cranes, Linden Peine, Lorain, Liebherr, Mannes, or machines of a similar nature, Well Point Systems, Deep Well Pumps, Concrete Mixers with loading Device, Concrete Plants, Motor Generators when used for temporary power and lights), skid steer machines of a similar nature including bobcat.

Effective Period: 7/1/2018 - 6/30/2019
Wage Rate per Hour: $61.05
Supplemental Benefit Rate per Hour: $38.28
Supplemental Note: $69.16 on overtime

Engineer - Building Work Maintenance Engineers II

On Pumps, Generators, Mixers and Heaters

Effective Period: 7/1/2018 - 6/30/2019
Wage Rate per Hour: $47.25
Supplemental Benefit Rate per Hour: $38.28
Supplemental Note: $69.16 on overtime

Engineer - Building Work Oilers I

All gasoline, electric, diesel or air operated Gradealls: Concrete Pumps, Overhead Cranes in Power Houses: Their duties shall be to assist the Engineer in oiling, greasing and repairing of all machines; Driving Truck Cranes: Driving and Operating Fuel and Grease Trucks, Cherrypickers (hydraulic cranes) over 70,000 GVW, and machines of a similar nature.

Effective Period: 7/1/2018 - 6/30/2019
Wage Rate per Hour: $58.01
Supplemental Benefit Rate per Hour: $38.28
Supplemental Note: $69.16 on overtime

Engineer - Building Work Oilers II

Oilers on Crawler Cranes, Backhoes, Trenching Machines, Gunite Machines, Compressors (three or more in Battery).

Effective Period: 7/1/2018 - 6/30/2019
Wage Rate per Hour: $42.89
Supplemental Benefit Rate per Hour: $38.28
Supplemental Note: $69.16 on overtime

Overtime Description

On jobs of more than one shift, if an Employee fails to report for work through any cause over which the Employer has no control, the Employee on duty will continue to work at the rate of single time.

Overtime

Double time the regular rate after an 8 hour day.
Double time the regular time rate for Saturday.
Double time the regular rate for Sunday.
Double time the regular rate for work on the following holiday(s).

Paid Holidays

New Year's Day
Lincoln's Birthday
President's Day

Memorial Day
Independence Day
Labor Day
Columbus Day
Veteran's Day
Thanksgiving Day
Christmas Day
Employees must work at least one day in the payroll week in which the holiday occurs to receive the paid holiday

Shift Rates
Off Shift: double time the regular hourly rate.

(Local #15)

ENGINEER - CITY SURVEYOR AND CONSULTANT

Party Chief

Effective Period: 7/1/2018 - 6/30/2019
Wage Rate per Hour: $39.90
Supplemental Benefit Rate per Hour: $21.60
Supplemental Note: Overtime Benefit Rate - $29.83 per hour (time & one half) $38.05 per hour (double time).

Instrument Person

Effective Period: 7/1/2018 - 6/30/2019
Wage Rate per Hour: $32.81
Supplemental Benefit Rate per Hour: $21.60
Supplemental Note: Overtime Benefit Rate - $29.83 per hour (time & one half) $38.05 per hour (double time).

Rodperson

Effective Period: 7/1/2018 - 6/30/2019
Wage Rate per Hour: $28.34
Supplemental Benefit Rate per Hour: $21.60
Supplemental Note: Overtime Benefit Rate - $29.83 per hour (time & one half) $38.05 per hour (double time).

Overtime Description
Time and one half the regular rate after an 8 hour day, Time and one half the regular rate for Saturday for the first eight hours worked, Double time the regular time rate for Saturday for work performed in excess of eight hours, Double time the regular rate for Sunday and Double time the regular rate for work on a holiday.

Paid Holidays
New Year's Day
Lincoln's Birthday
President's Day

Memorial Day
Independence Day
Labor Day
Columbus Day
Veteran's Day
Thanksgiving Day
Day after Thanksgiving
Christmas Day
Employees must work at least one day in the payroll week in which the holiday occurs to receive the paid holiday

(Operating Engineer Local #15-D)

ENGINEER - FIELD (BUILDING CONSTRUCTION)
(Construction of Building Projects, Concrete Superstructures, etc.)

Field Engineer - BC Party Chief

Effective Period: 7/1/2018 - 6/30/2019
Wage Rate per Hour: $63.81
Supplemental Benefit Rate per Hour: $33.93
Supplemental Note: Overtime Benefit Rate - $47.57 per hour (time & one half) $61.21 per hour (double time).

Field Engineer - BC Instrument Person

Effective Period: 7/1/2018 - 6/30/2019
Wage Rate per Hour: $49.60
Supplemental Benefit Rate per Hour: $33.93
Supplemental Note: Overtime Benefit Rate - $47.57 per hour (time & one half) $61.21 per hour (double time).

Field Engineer - BC Rodperson

Effective Period: 7/1/2018 - 6/30/2019
Wage Rate per Hour: $32.11
Supplemental Benefit Rate per Hour: $33.93
Supplemental Note: Overtime Benefit Rate - $47.57 per hour (time & one half) $61.21 per hour (double time).

Overtime Description
Time and one half the regular rate after a 7 hour work and time and one half the regular rate for Saturday for the first seven hours worked, Double time the regular time rate for Saturday for work performed in excess of seven hours, Double time the regular rate for Sunday and Double time the regular rate for work on a holiday.

Paid Holidays
New Year's Day
President's Day
Good Friday

Memorial Day
Independence Day
Labor Day
Columbus Day
Veteran's Day
Thanksgiving Day
Christmas Day
Employees must work at least one day in the payroll week in which the holiday occurs to receive the paid holiday

(Operating Engineer Local #15-D)

ENGINEER - FIELD (HEAVY CONSTRUCTION)
(Construction of Roads, Tunnels, Bridges, Sewers, Building Foundations, Engineering Structures etc.)

Field Engineer - HC Party Chief

Effective Period: 7/1/2018 - 6/30/2019
Wage Rate per Hour: $72.19
Supplemental Benefit Rate per Hour: $35.32
Supplemental Note: Overtime benefit rate - $49.53 per hour (time & one half), $63.74 per hour (double time).

Field Engineer - HC Instrument Person

Effective Period: 7/1/2018 - 6/30/2019
Wage Rate per Hour: $53.03
Supplemental Benefit Rate per Hour: $35.32
Supplemental Note: Overtime benefit rate - $49.53 per hour (time & one half), $63.74 per hour (double time).

Field Engineer - HC Rodperson

Effective Period: 7/1/2018 - 6/30/2019
Wage Rate per Hour: $44.51
Supplemental Benefit Rate per Hour: $35.32
Supplemental Note: Overtime benefit rate - $49.53 per hour (time & one half), $63.74 per hour (double time).

Overtime Description
Time and one half the regular rate after an 8 hour day, Time and one half the regular rate for Saturday for the first eight hours worked, Double time the regular time rate for Saturday for work performed in excess of eight hours, Double time the regular rate for Sunday and Double time the regular rate for work on a holiday.

Paid Holidays
New Year's Day
Lincoln's Birthday

President's Day
Memorial Day
Independence Day
Labor Day
Columbus Day
Veteran's Day
Thanksgiving Day
Christmas Day
Employees must work at least one day in the payroll week in which the holiday occurs to receive the paid holiday

(Operating Engineer Local #15-D)

ENGINEER - FIELD (STEEL ERECTION)

Field Engineer - Steel Erection Party Chief

Effective Period: 7/1/2018 - 6/30/2019
Wage Rate per Hour: $67.31
Supplemental Benefit Rate per Hour: $34.82
Supplemental Note: Overtime benefit rate - $48.78 per hour (time & one half), $62.74 per hour (double time).

Field Engineer - Steel Erection Instrument Person

Effective Period: 7/1/2018 - 6/30/2019
Wage Rate per Hour: $52.47
Supplemental Benefit Rate per Hour: $34.82
Supplemental Note: Overtime benefit rate - $48.78per hour (time & one half), $62.74 per hour (double time).

Field Engineer - Steel Erection Rodperson

Effective Period: 7/1/2018 - 6/30/2019
Wage Rate per Hour: $35.14
Supplemental Benefit Rate per Hour: $34.82
Supplemental Note: Overtime benefit rate - $48.78 per hour (time & one half), $62.74 per hour (double time).

Overtime Description
Time and one half the regular rate for Saturday for the first eight hours worked.
Double time the regular rate for Saturday for work performed in excess of eight hours.

Overtime
Time and one half the regular rate after an 8 hour day.
Double time the regular rate for Sunday.
Double time the regular rate for work on the following holiday(s).

Paid Holidays
New Year's Day

Lincoln's Birthday
President's Day
Memorial Day
Independence Day
Labor Day
Columbus Day
Veteran's Day
Thanksgiving Day
Christmas Day
Employees must work at least one day in the payroll week in which the holiday occurs to receive the paid holiday

(Operating Engineer Local #15-D)

ENGINEER - OPERATING

Operating Engineer - Road & Heavy Construction I

Back Filling Machines, Cranes, Mucking Machines and Dual Drum Paver.

Effective Period: 7/1/2018 - 6/30/2019
Wage Rate per Hour: $79.03
Supplemental Benefit Rate per Hour: $31.85
Supplemental Note: $57.75 overtime hours
Shift Wage Rate: $126.45

Operating Engineer - Road & Heavy Construction II

Backhoes, Power Shovels, Hydraulic Clam Shells, Steel Erection, Moles and machines of a similar nature.

Effective Period: 7/1/2018 - 6/30/2019
Wage Rate per Hour: $81.79
Supplemental Benefit Rate per Hour: $31.85
Supplemental Note: $57.75 overtime hours
Shift Wage Rate: $130.86

Operating Engineer - Road & Heavy Construction III

Mine Hoists, Cranes, etc. (Used as Mine Hoists)

Effective Period: 7/1/2018 - 6/30/2019
Wage Rate per Hour: $84.39
Supplemental Benefit Rate per Hour: $31.85
Supplemental Note: $57.75 overtime hours
Shift Wage Rate: $135.02

Operating Engineer - Road & Heavy Construction IV

Gradealls, Keystones, Cranes on land or water (with digging buckets), Bridge Cranes, Vermeer Cutter and machines of a similar nature, Trenching Machines.

Effective Period: 7/1/2018 - 6/30/2019
Wage Rate per Hour: $82.38
Supplemental Benefit Rate per Hour: $31.85
Supplemental Note: $57.75 overtime hours
Shift Wage Rate: $131.81

Operating Engineer - Road & Heavy Construction V

Pile Drivers & Rigs (employing Dock Builder foreperson): Derrick Boats, Tunnel Shovels.

Effective Period: 7/1/2018 - 6/30/2019
Wage Rate per Hour: $80.77
Supplemental Benefit Rate per Hour: $31.85
Supplemental Note: $57.75overtime hours
Shift Wage Rate: $129.23

Operating Engineer - Road & Heavy Construction VI

Mixers (Concrete with loading attachment), Concrete Pavers, Cableways, Land Derricks, Power Houses (Low Air Pressure Units).

Effective Period: 7/1/2018 - 6/30/2019
Wage Rate per Hour: $76.78
Supplemental Benefit Rate per Hour: $31.85
Supplemental Note: $57.75 overtime hours
Shift Wage Rate: $122.85

Operating Engineer - Road & Heavy Construction VII

Barrier Movers , Barrier Transport and Machines of a Similar Nature.

Effective Period: 7/1/2018 - 6/30/2019
Wage Rate per Hour: $62.16
Supplemental Benefit Rate per Hour: $31.85
Supplemental Note: $57.75 overtime hours
Shift Wage Rate: $99.46

Operating Engineer - Road & Heavy Construction VIII

Utility Compressors

Effective Period: 7/1/2018 - 6/30/2019
Wage Rate per Hour: $48.42
Supplemental Benefit Rate per Hour: $31.85
Supplemental Note: $57.75 overtime hours
Shift Wage Rate: $60.82

Operating Engineer - Road & Heavy Construction IX

Horizontal Boring Rig

Effective Period: 7/1/2018 - 6/30/2019
Wage Rate per Hour: $73.05
Supplemental Benefit Rate per Hour: $31.85
Supplemental Note: $57.75 overtime hours
Shift Wage Rate: $116.88

Operating Engineer - Road & Heavy Construction X

Elevators (manually operated as personnel hoist).

Effective Period: 7/1/2018 - 6/30/2019
Wage Rate per Hour: $67.21
Supplemental Benefit Rate per Hour: $31.85
Supplemental Note: $57.75 overtime hours
Shift Wage Rate: $107.54

Operating Engineer - Road & Heavy Construction XI

Compressors (Portable 3 or more in battery), Driving of Truck Mounted Compressors, Well-point Pumps, Tugger Machines Well Point Pumps, Churn Drill.

Effective Period: 7/1/2018 - 6/30/2019
Wage Rate per Hour: $52.38
Supplemental Benefit Rate per Hour: $31.85
Supplemental Note: $57.75 overtime hours
Shift Wage Rate: $83.81

Operating Engineer - Road & Heavy Construction XII

All Drills and Machines of a similar nature.

Effective Period: 7/1/2018 - 6/30/2019
Wage Rate per Hour: $77.58
Supplemental Benefit Rate per Hour: $31.85
Supplemental Note: $57.75 overtime hours
Shift Wage Rate: $124.13

Operating Engineer - Road & Heavy Construction XIII

Concrete Pumps, Concrete Plant, Stone Crushers, Double Drum Hoist, Power Houses (other than above).

Effective Period: 7/1/2018 - 6/30/2019
Wage Rate per Hour: $75.16
Supplemental Benefit Rate per Hour: $31.85
Supplemental Note: $57.75 overtime hours

Shift Wage Rate: $120.26

Operating Engineer - Road & Heavy Construction XIV

Concrete Mixer

Effective Period: 7/1/2018 - 6/30/2019
Wage Rate per Hour: $71.89
Supplemental Benefit Rate per Hour: $31.85
Supplemental Note: $57.75 overtime hours
Shift Wage Rate: $115.02

Operating Engineer - Road & Heavy Construction XV

Compressors (Portable Single or two in Battery, not over 100 feet apart), Pumps (River Cofferdam) and Welding Machines, Push Button Machines, All Engines Irrespective of Power (Power-Pac) used to drive auxiliary equipment, Air, Hydraulic, etc.

Effective Period: 7/1/2018 - 6/30/2019
Wage Rate per Hour: $48.73
Supplemental Benefit Rate per Hour: $31.85
Supplemental Note: $57.75 overtime hours
Shift Wage Rate: $77.97

Operating Engineer - Road & Heavy Construction XVI

Concrete Breaking Machines, Hoists (Single Drum), Load Masters, Locomotives (over ten tons) and Dinkies over ten tons, Hydraulic Crane-Second Engineer.

Effective Period: 7/1/2018 - 6/30/2019
Wage Rate per Hour: $68.69
Supplemental Benefit Rate per Hour: $31.85
Supplemental Note: $57.75 overtime hours
Shift Wage Rate: $109.90

Operating Engineer - Road & Heavy Construction XVII

On-Site concrete plant engineer, On-site Asphalt Plant Engineer, and Vibratory console.

Effective Period: 7/1/2018 - 6/30/2019
Wage Rate per Hour: $69.21
Supplemental Benefit Rate per Hour: $31.85
Supplemental Note: $57.75 overtime hours
Shift Wage Rate: $110.74

Operating Engineer - Road & Heavy Construction XVIII

Tower Crane

Effective Period: 7/1/2018 - 6/30/2019

Wage Rate per Hour: $98.99
Supplemental Benefit Rate per Hour: $31.85
Supplemental Note: $57.75 overtime hours
Shift Wage Rate: $158.38

Operating Engineer - Paving I

Asphalt Spreaders, Autogrades (C.M.I.), Roto/Mil

Effective Period: 7/1/2018 - 6/30/2019
Wage Rate per Hour: $76.78
Supplemental Benefit Rate per Hour: $31.85
Supplemental Note: $57.75 overtime hours
Shift Wage Rate: $122.85

Operating Engineer - Paving II

Asphalt Roller

Effective Period: 7/1/2018 - 6/30/2019
Wage Rate per Hour: $74.81
Supplemental Benefit Rate per Hour: $31.85
Supplemental Note: $57.75 overtime hours
Shift Wage Rate: $119.70

Operating Engineer - Paving III

Asphalt Plants

Effective Period: 7/1/2018 - 6/30/2019
Wage Rate per Hour: $63.40
Supplemental Benefit Rate per Hour: $31.85
Supplemental Note: $57.75 overtime hours
Shift Wage Rate: $101.44

Operating Engineer - Concrete I

Cranes

Effective Period: 7/1/2018 - 6/30/2019
Wage Rate per Hour: $82.02
Supplemental Benefit Rate per Hour: $31.85
Supplemental Note: $57.75 overtime hours

Operating Engineer - Concrete II

Compressors

Effective Period: 7/1/2018 - 6/30/2019

Wage Rate per Hour: $49.10
Supplemental Benefit Rate per Hour: $31.85
Supplemental Note: $57.75 overtime hours

Operating Engineer - Concrete III

Micro-traps (Negative Air Machines), Vac-All Remediation System.

Effective Period: 7/1/2018 - 6/30/2019
Wage Rate per Hour: $65.70
Supplemental Benefit Rate per Hour: $31.85
Supplemental Note: $57.75 overtime hours

Operating Engineer - Steel Erection I

Three Drum Derricks

Effective Period: 7/1/2018 - 6/30/2019
Wage Rate per Hour: $84.83
Supplemental Benefit Rate per Hour: $31.85
Supplemental Note: $57.75 overtime hours
Shift Wage Rate: $135.73

Operating Engineer - Steel Erection II

Cranes, 2 Drum Derricks, Hydraulic Cranes, Fork Lifts and Boom Trucks.

Effective Period: 7/1/2018 - 6/30/2019
Wage Rate per Hour: $81.54
Supplemental Benefit Rate per Hour: $31.85
Supplemental Note: $57.75 overtime hours
Shift Wage Rate: $130.46

Operating Engineer - Steel Erection III

Compressors, Welding Machines.

Effective Period: 7/1/2018 - 6/30/2019
Wage Rate per Hour: $48.69
Supplemental Benefit Rate per Hour: $31.85
Supplemental Note: $57.75 overtime hours
Shift Wage Rate: $77.90

Operating Engineer - Steel Erection IV

Compressors - Not Combined with Welding Machine.

Effective Period: 7/1/2018 - 6/30/2019
Wage Rate per Hour: $46.39

Supplemental Benefit Rate per Hour: $31.85
Supplemental Note: $57.75 overtime hours
Shift Wage Rate: $74.22

Operating Engineer - Building Work I

Forklifts, Plaster (Platform machine), Plaster Bucket, Concrete Pump and all other equipment used for hoisting material.

Effective Period: 7/1/2018 - 6/30/2019
Wage Rate per Hour: $67.78
Supplemental Benefit Rate per Hour: $31.85
Supplemental Note: $57.75 overtime hours

Operating Engineer - Building Work II

Compressors, Welding Machines (Cutting Concrete-Tank Work), Paint Spraying, Sandblasting, Pumps (with the exclusion of Concrete Pumps), All Engines irrespective of Power (Power-Pac) used to drive Auxiliary Equipment, Air, Hydraulic, Jacking System, etc.

Effective Period: 7/1/2018 - 6/30/2019
Wage Rate per Hour: $50.96
Supplemental Benefit Rate per Hour: $31.85
Supplemental Note: $57.75 overtime hours

Operating Engineer - Building Work III

Double Drum

Effective Period: 7/1/2018 - 6/30/2019
Wage Rate per Hour: $77.03
Supplemental Benefit Rate per Hour: $31.85
Supplemental Note: $57.75 overtime hours

Operating Engineer - Building Work IV

Stone Derrick, Cranes, Hydraulic Cranes Boom Trucks.

Effective Period: 7/1/2018 - 6/30/2019
Wage Rate per Hour: $81.56
Supplemental Benefit Rate per Hour: $31.85
Supplemental Note: $57.75 overtime hours

Operating Engineer - Building Work V

Dismantling and Erection of Cranes, Relief Engineer.

Effective Period: 7/1/2018 - 6/30/2019
Wage Rate per Hour: $75.21
Supplemental Benefit Rate per Hour: $31.85

Supplemental Note: $57.75 overtime hours

Operating Engineer - Building Work VI

4 Pole Hoist, Single Drum Hoists.

Effective Period: 7/1/2018 - 6/30/2019
Wage Rate per Hour: $74.43
Supplemental Benefit Rate per Hour: $31.85
Supplemental Note: $57.75 overtime hours

Operating Engineer - Building Work VII

Rack & Pinion and House Cars

Effective Period: 7/1/2018 - 6/30/2019
Wage Rate per Hour: $59.35
Supplemental Benefit Rate per Hour: $31.85
Supplemental Note: $57.75 overtime hours
For New House Car projects Wage Rate per Hour $47.54

Overtime Description

On jobs of more than one shift, if an Employee fails to report for work through any cause over which the Employer has no control, the Employee on duty will continue to work at the rate of single time.

For House Cars and Rack & Pinion only: Overtime paid at time and one-half for all hours in excess of eight hours in a day, Saturday, Sunday and Holidays worked.

Overtime

Double time the regular rate after an 8 hour day.
Double time the regular time rate for Saturday.
Double time the regular rate for Sunday.
Double time the regular rate for work on the following holiday(s).

Paid Holidays

New Year's Day
Lincoln's Birthday
President's Day
Memorial Day
Independence Day
Labor Day
Columbus Day
Veteran's Day
Thanksgiving Day
Day after Thanksgiving
Christmas Day
Employees must work at least one day in the payroll week in which the holiday occurs to receive the paid holiday

Shift Rates

For Steel Erection Only: Shifts may be worked at the single time rate at other than the regular working hours (8:00 A.M. to 4:30 P.M.) on the following work ONLY: Heavy construction jobs on work below the street level, over railroad tracks and on building jobs.

(Operating Engineer Local #14)

FLOOR COVERER

(Interior vinyl composition tile, sheath vinyl linoleum and wood parquet tile including site preparation and synthetic turf not including site preparation)

Floor Coverer

Effective Period: 7/1/2018 - 6/30/2019
Wage Rate per Hour: $50.50
Supplemental Benefit Rate per Hour: $45.88

Overtime

Time and one half the regular rate after an 8 hour day.
Time and one half the regular rate for Saturday.
Double time the regular rate for Sunday.

Overtime Holidays

Double time the regular rate for work on the following holiday(s).
New Year's Day
President's Day
Memorial Day
Independence Day
Labor Day
Columbus Day
Presidential Election Day
Thanksgiving Day
Day after Thanksgiving
Christmas Day

Paid Holidays

1/2 day on Christmas Eve if work is performed in the A.M.
1/2 day on New Year's Eve if work is performed in the A.M.

Shift Rates

Two shifts may be utilized with the first shift working 8:00 A.M. to the end of the shift at the straight time of pay. The second shift will receive one hour at double time rate for the last hour of the shift. (eight for seven, nine for eight).

(Carpenters District Council)

GLAZIER
(New Construction, Remodeling, and Alteration)

Glazier

Effective Period: 7/1/2018 - 6/30/2019
Wage Rate per Hour: $45.55
Supplemental Benefit Rate per Hour: $41.39
Supplemental Note: Supplemental Benefit Overtime Rate: $62.10

Overtime Description
An optional 8th hour can be worked at straight time rate. If 9th hour is worked, then both hours or more (8th & 9th or more) will be at the double time rate of pay.

Overtime
Double time the regular rate after a 7 hour day.
Double time the regular time rate for Saturday.
Double time the regular rate for Sunday.

Overtime Holidays
Double time the regular rate for work on the following holiday(s).
New Year's Day
President's Day
Memorial Day
Independence Day
Labor Day
Thanksgiving Day
Day after Thanksgiving
Christmas Day

Paid Holidays
None

Shift Rates
Shifts shall be any 7 hours beyond 4:00 P.M. for which the glazier shall receive 8 hours pay for 7 hours worked.

(Local #1281)

GLAZIER - REPAIR & MAINTENANCE
(For the Installation of Glass - All repair and maintenance work on a particular building, whenever performed, where the total cumulative contract value is

under $141,750. Except where enumerated (i.e. plate glass windows) does not apply to non-residential buildings.)

Craft Jurisdiction for repair, maintenance and fabrication

Plate glass replacement, Residential glass replacement, Residential mirrors and shower doors, Storm windows and storm doors, Residential replacement windows, Herculite door repairs, Door closer repairs, Retrofit apartment house (non commercial buildings), Glass tinting.

Effective Period: 7/1/2018 - 6/30/2019
Wage Rate per Hour: $25.06
Supplemental Benefit Rate per Hour: $21.54

Overtime
Time and one half the regular rate after an 8 hour day.
Double time the regular rate for Sunday.
Time and one half the regular rate for work on the following holiday(s).
Time and one half the regular hourly rate after 40 hours in any work week.

Paid Holidays
New Year's Day
President's Day
Memorial Day
Independence Day
Labor Day
Thanksgiving Day
Day after Thanksgiving
Christmas Day

(Local #1281)

HAZARDOUS MATERIAL HANDLER
(Removal, abatement, encapsulation or decontamination of asbestos, lead, mold, or other toxic or hazardous waste/materials)

Handler

Effective Period: 7/1/2018 - 6/30/2019
Wage Rate per Hour: $36.00
Supplemental Benefit Rate per Hour: $16.45

Overtime
Time and one half the regular rate after an 8 hour day.

Time and one half the regular rate for Sunday.
Time and one half the regular hourly rate after 40 hours in any work week.

Overtime Holidays
Time and one half the regular rate for work on the following holiday(s).
New Year's Day
Good Friday
Memorial Day
Independence Day
Labor Day
Thanksgiving Day
Christmas Day
Easter

Paid Holidays
None

(Local #78 and Local #12A)

HEAT AND FROST INSULATOR

Heat & Frost Insulator

Effective Period: 7/1/2018 - 6/30/2019
Wage Rate per Hour: $61.21
Supplemental Benefit Rate per Hour: $39.46

Overtime Description
Double time shall be paid for supplemental benefits during overtime work.
8th hour paid at time and one half.

Overtime
Double time the regular rate after an 8 hour day.
Double time the regular time rate for Saturday.
Double time the regular rate for Sunday.

Overtime Holidays
Double time the regular rate for work on the following holiday(s).
New Year's Day
Martin Luther King Jr. Day
President's Day
Memorial Day
Independence Day
Columbus Day
Veteran's Day
Thanksgiving Day
Day after Thanksgiving

Christmas Day

Triple time the regular rate for work on the following holiday(s).
Labor Day

Paid Holidays
None

Shift Rates
The first shift shall work seven hours at the regular straight time rate. The second and third shift shall work seven hours the regular straight time hourly rate plus a fourteen percent wage and benefit premium.
Off hour work in occupied or retail buildings may be worked on weekdays with an increment of $1.00 per hour and eight hours pay for seven (7) hours worked. Double time will apply for over seven (7) hours worked on weekdays, weekends or holidays.

(Local #12) (BCA)

HOUSE WRECKER
(TOTAL DEMOLITION)

House Wrecker - Tier A

On all work sites the first, second, eleventh and every third House Wrecker thereafter will be Tier A House Wreckers (i.e. 1st, 2nd, 11th, 14th etc). Other House Wreckers may be Tier B House Wreckers.

Effective Period: 7/1/2018 - 6/30/2019
Wage Rate per Hour: $36.88
Supplemental Benefit Rate per Hour: $29.47

House Wrecker - Tier B

Effective Period: 7/1/2018 - 6/30/2019
Wage Rate per Hour: $26.11
Supplemental Benefit Rate per Hour: $21.88

Overtime
Time and one half the regular rate after an 8 hour day.
Time and one half the regular rate for Saturday.
Double time the regular rate for Sunday.

Overtime Holidays
Double time the regular rate for work on the following holiday(s).
New Year's Day
President's Day
Memorial Day

Independence Day
Labor Day
Thanksgiving Day
Christmas Day

Paid Holidays
None

(Mason Tenders District Council)

IRON WORKER - ORNAMENTAL

Iron Worker - Ornamental

Effective Period: 7/1/2018 - 6/30/2019
Wage Rate per Hour: $44.40
Supplemental Benefit Rate per Hour: $52.62
Supplemental Note: Supplemental benefits are to be paid at the applicable overtime rate when overtime is in effect.

Overtime Description
Time and one half the regular rate after a 7 hour day for a maximum of two hours on any regular work day (the 8th and 9th hour) and double time shall be paid for all work on a regular work day thereafter, time and one half the regular rate for Saturday for the first seven hours of work and double time shall be paid for all work on a Saturday thereafter.

Overtime
Double time the regular rate for Sunday.

Overtime Holidays
Double time the regular rate for work on the following holiday(s).
New Year's Day
President's Day
Memorial Day
Independence Day
Labor Day
Thanksgiving Day
Christmas Day

Paid Holidays
None

Shift Rates
For off shift work - 8 hours pay for 7 hours of work. When two or three shifts are employed on a job, Monday through Friday, the workday for each shift shall be seven hours and paid for ten and one-half hours at the single

time rate. When two or three shifts are worked on Saturday, Sunday or holidays, each shift shall be seven hours and paid fifteen and three-quarters hours.

(Local #580)

IRON WORKER - STRUCTURAL

Iron Worker - Structural

Effective Period: 7/1/2018 - 6/30/2019
Wage Rate per Hour: $50.35
Supplemental Benefit Rate per Hour: $73.95
Supplemental Note: Supplemental benefits are to be paid at the applicable overtime rate when overtime is in effect.

Overtime Description
Monday through Friday- the first eight hours are paid at straight time, the 9th and 10th hours are paid at time and one-half the regular rate, all additional weekday overtime is paid at double the regular rate. Saturdays- the first eight hours are paid at time and one-half the regular rate, double time thereafter. Sunday-all shifts are paid at double time.

Overtime
Time and one half the regular rate after an 8 hour day.
Time and one half the regular rate for Saturday.
Double time the regular rate for Sunday.

Overtime Holidays
Double time the regular rate for work on the following holiday(s).
New Year's Day
President's Day
Memorial Day
Independence Day
Labor Day
Thanksgiving Day
Christmas Day

Paid Holidays
1/2 day on Christmas Eve if work is performed in the A.M.
1/2 day on New Year's Eve if work is performed in the A.M.

Shift Rates
Monday through Friday - First Shift: First eight hours are paid at straight time, the 9th & 10th hours are paid at time and a half, double time paid thereafter. Second and third Shifts: First eight hours are paid at time and one-half, double time thereafter. Saturdays: All shifts, first eight hours paid at time and one-half, double time thereafter: Sunday all shifts are paid at double time.

(Local #40 & #361)

LABORER
(Foundation, Concrete, Excavating, Street Pipe Layer and Common)

Laborer

Excavation and foundation work for buildings, heavy construction, engineering work, and hazardous waste removal in connection with the above work. Landscaping tasks in connection with heavy construction work, engineering work and building projects. Projects include, but are not limited to pollution plants, sewers, parks, subways, bridges, highways, etc.

Effective Period: 7/1/2018 - 6/30/2019
Wage Rate per Hour: $42.00
Supplemental Benefit Rate per Hour: $42.63

Overtime
Time and one half the regular rate after an 8 hour day.
Time and one half the regular rate for Saturday.
Double time the regular rate for Sunday.

Overtime Holidays
Double time the regular rate for work on the following holiday(s).
New Year's Day
Memorial Day
Independence Day
Labor Day
Columbus Day
Thanksgiving Day
Christmas Day

Paid Holidays
Labor Day
Thanksgiving Day

Shift Rates
When two shifts are employed, single time rate shall be paid for each shift. When three shifts are found necessary, each shift shall work seven and one half hours (7 ½), but shall be paid for eight (8) hours of labor, and be permitted one half hour for lunch.

(Local #731)

LANDSCAPING

(Landscaping tasks, as well as tree pruning, tree removing, spraying and maintenance in connection with the planting of street trees and the planting of trees in city parks but not when such activities are performed as part of, or in connection with, other construction or reconstruction projects.)

Landscaper (Above 6 years experience)

Effective Period: 7/1/2018 - 6/30/2019
Wage Rate per Hour: $30.25
Supplemental Benefit Rate per Hour: $16.05

Landscaper (3 - 6 years experience)

Effective Period: 7/1/2018 - 6/30/2019
Wage Rate per Hour: $29.25
Supplemental Benefit Rate per Hour: $16.05

Landscaper (up to 3 years experience)

Effective Period: 7/1/2018 - 6/30/2019
Wage Rate per Hour: $26.75
Supplemental Benefit Rate per Hour: $16.05

Groundperson

Effective Period: 7/1/2018 - 6/30/2019
Wage Rate per Hour: $26.75
Supplemental Benefit Rate per Hour: $16.05

Tree Remover / Pruner

Effective Period: 7/1/2018 - 6/30/2019
Wage Rate per Hour: $35.25
Supplemental Benefit Rate per Hour: $16.05

Landscaper Sprayer (Pesticide Applicator)

Effective Period: 7/1/2018 - 6/30/2019
Wage Rate per Hour: $25.25
Supplemental Benefit Rate per Hour: $16.05

Watering - Plant Maintainer

Effective Period: 7/1/2018 - 6/30/2019
Wage Rate per Hour: $20.22

Supplemental Benefit Rate per Hour: $16.05

Overtime Description

For all overtime work performed, supplemental benefits shall include an additional seventy-five ($0.75) cents per hour.

Overtime

Time and one half the regular rate after an 8 hour day.
Time and one half the regular rate for Saturday.
Double time the regular rate for Sunday.
Time and one half the regular rate for work on a holiday plus the day's pay.

Paid Holidays

New Year's Day
Memorial Day
Independence Day
Labor Day
Thanksgiving Day
Christmas Day

Shift Rates

Work performed on a 4pm to 12am shift has a 15% differential. Work performed on a 12am to 8am shift has a 20% differential.

(Local #175)

MARBLE MECHANIC

Marble Setter

Effective Period: 7/1/2018 - 6/30/2019
Wage Rate per Hour: $53.63
Supplemental Benefit Rate per Hour: $40.35

Marble Finisher

Effective Period: 7/1/2018 - 6/30/2019
Wage Rate per Hour: $42.21
Supplemental Benefit Rate per Hour: $37.71

Marble Polisher

Effective Period: 7/1/2018 - 6/30/2019
Wage Rate per Hour: $37.99
Supplemental Benefit Rate per Hour: $29.48

Overtime Description

Supplemental Benefit contributions are to be made at the applicable overtime rates. Time and one half the regular rate after a 7 hour day or time and one half the regular rate after an 8 hour day - chosen by Employer at the start of the project and then would last for the full duration of the project.

Overtime

Time and one half the regular rate for Saturday.
Double time the regular rate for Sunday.

Overtime Holidays

Double time the regular rate for work on the following holiday(s).
New Year's Day
President's Day
Good Friday
Memorial Day
Independence Day
Labor Day
Columbus Day
Veteran's Day
Thanksgiving Day
Day after Thanksgiving
Christmas Day

Paid Holidays

None

(Local #7)

MASON TENDER

Mason Tender

Effective Period: 7/1/2018 - 6/30/2019
Wage Rate per Hour: $38.40
Supplemental Benefit Rate per Hour: $31.04

Overtime

Time and one half the regular rate after an 8 hour day.
Time and one half the regular rate for Saturday.
Double time the regular rate for Sunday.
Saturday may be used as a make-up day at straight time when a day is lost during that week to inclement weather.

Overtime Holidays

Double time the regular rate for work on the following holiday(s).

New Year's Day
President's Day
Memorial Day
Independence Day
Labor Day
Thanksgiving Day
Christmas Day

Paid Holidays
None

Shift Rates
The employer may work two (2) shifts with the first shift at the straight time wage rate and the second shift receiving eight (8) hours paid for seven (7) hours work at the straight time wage rate. When it is not possible to conduct alteration work during regular working hours in a building occupied by tenants, the rule for the second shift will apply.

(Local #79)

MASON TENDER (INTERIOR DEMOLITION WORKER)

Mason Tender Tier A

Tier A Interior Demolition Worker performs all burning, chopping, and other technically skilled tasks related to interior demolition work.

Effective Period: 7/1/2018 - 6/30/2019
Wage Rate per Hour: $36.44
Supplemental Benefit Rate per Hour: $24.50

Mason Tender Tier B

Tier B Interior Demolition Worker performs manual work and work incidental to demolition work, such as loading and carting of debris from the work site to an area where it can be loaded in to bins/trucks for removal. Also performs clean-up of the site when demolition is completed.

Effective Period: 7/1/2018 - 6/30/2019
Wage Rate per Hour: $25.63
Supplemental Benefit Rate per Hour: $18.82

Overtime
Time and one half the regular rate after an 8 hour day.
Time and one half the regular rate for Sunday.

Overtime Holidays
Double time the regular rate for work on the following holiday(s).

New Year's Day
President's Day
Memorial Day
Independence Day
Labor Day
Thanksgiving Day
Christmas Day

Paid Holidays
None

(Local #79)

METALLIC LATHER

Metallic Lather

Effective Period: 7/1/2018 - 6/30/2019
Wage Rate per Hour: $46.28
Supplemental Benefit Rate per Hour: $44.92
Supplemental Note: Supplemental benefits for overtime are paid at the appropriate overtime rate.

Overtime Description
Overtime would be time and one half the regular rate after a seven (7) or eight (8) hours workday, which would be set at the start of the job.

Overtime
Time and one half the regular rate for Saturday.
Double time the regular rate for Sunday.

Overtime Holidays
Double time the regular rate for work on the following holiday(s).
New Year's Day
Washington's Birthday
Memorial Day
Independence Day
Labor Day
Columbus Day
Thanksgiving Day
Christmas Day

Paid Holidays
1/2 day on Christmas Eve if work is performed in the A.M.
1/2 day on New Year's Eve if work is performed in the A.M.

Shift Rates

There will be no shift differential paid on the first shift if more than one shift is employed. The shift differential will remain $12/hour on the second and third shift for the first eight (8) hours if worked. There will be no pyramiding on overtime worked on second and third shifts. The time and one half (1.5x) rate will be against the base wage rate, not the shift differential

(Local #46)

MILLWRIGHT

Millwright

Effective Period: 7/1/2018 - 6/30/2019
Wage Rate per Hour: $52.70
Supplemental Benefit Rate per Hour: $53.21

Overtime
Time and one half the regular rate after an 8 hour day.
Time and one half the regular rate for Saturday.
Double time the regular rate for Sunday.
Saturday may be used as a make-up day at straight time when a day is lost during that week to inclement weather.

Overtime Holidays
Double time the regular rate for work on the following holiday(s).
New Year's Day
President's Day
Good Friday
Memorial Day
Independence Day
Labor Day
Columbus Day
Presidential Election Day
Thanksgiving Day
Christmas Day

Paid Holidays
1/2 day on Christmas Eve if work is performed in the A.M.
1/2 day on New Year's Eve if work is performed in the A.M.

Shift Rates
The first shift shall receive the straight time rate of pay. The second shift receives the straight time rate of pay plus fifteen (15%) per cent. Members of the second shift shall be allowed one half hour to eat, with this time being included in the hours of the workday established. There must be a first shift to work a second shift. All additional hours worked shall be paid at the time and one-half rate of pay plus fifteen (15%) per cent for weekday hours.

(Local #740)

MOSAIC MECHANIC

Mosaic Mechanic - Mosaic & Terrazzo Mechanic

Effective Period: 7/1/2018 - 6/30/2019
Wage Rate per Hour: $48.85
Supplemental Benefit Rate per Hour: $41.33
Supplemental Note: Supplemental benefits for overtime to be paid at the rate of $52.35 per hour.

Mosaic Mechanic - Mosaic & Terrazzo Finisher

Effective Period: 7/1/2018 - 6/30/2019
Wage Rate per Hour: $47.25
Supplemental Benefit Rate per Hour: $41.31
Supplemental Note: Supplemental benefits for overtime to be paid at the rate of $52.33 per hour.

Mosaic Mechanic - Machine Operator Grinder

Effective Period: 7/1/2018 - 6/30/2019
Wage Rate per Hour: $47.25
Supplemental Benefit Rate per Hour: $41.33
Supplemental Note: Supplemental benefits for overtime to be paid at the rate of $52.33 per hour.

Overtime
Time and one half the regular rate after a 7 hour day.
Time and one half the regular rate for Saturday.
Double time the regular rate for Sunday.

Overtime Holidays
Double time the regular rate for work on the following holiday(s).
New Year's Day
Washington's Birthday
Good Friday
Independence Day
Labor Day
Columbus Day
Veteran's Day
Thanksgiving Day
Day after Thanksgiving
Christmas Day

Paid Holidays
None

(Local #7)

PAINTER

Painter - Brush & Roller

Effective Period: 7/1/2018 - 6/30/2019
Wage Rate per Hour: $42.50
Supplemental Benefit Rate per Hour: $30.87
Supplemental Note: $ 35.50 on overtime

Spray & Scaffold / Decorative / Sandblast

Effective Period: 7/1/2018 - 6/30/2019
Wage Rate per Hour: $45.50
Supplemental Benefit Rate per Hour: $30.87
Supplemental Note: $ 35.50 on overtime

Overtime
Time and one half the regular rate after a 7 hour day.
Time and one half the regular rate for Saturday.
Time and one half the regular rate for Sunday.

Overtime Holidays
Time and one half the regular rate for work on the following holiday(s).
New Year's Day
President's Day
Memorial Day
Independence Day
Labor Day
Columbus Day
Thanksgiving Day
Christmas Day

Paid Holidays
None

(District Council of Painters #9)

PAINTER - METAL POLISHER

METAL POLISHER

Effective Period: 7/1/2018 - 6/30/2019
Wage Rate per Hour: $30.58
Supplemental Benefit Rate per Hour: $7.16

METAL POLISHER - NEW CONSTRUCTION

Effective Period: 7/1/2018 - 6/30/2019
Wage Rate per Hour: $31.53
Supplemental Benefit Rate per Hour: $7.16

METAL POLISHER - SCAFFOLD OVER 34 FEET

Effective Period: 7/1/2018 - 6/30/2019
Wage Rate per Hour: $34.08
Supplemental Benefit Rate per Hour: $7.16

Overtime Description
All work performed on Saturdays shall be paid at time-in-a half. The exception being; for suspended scaffold work and work deemed as a construction project; an eight (8) hour shift lost during the week due to circumstances beyond the control of the employer, up to a maximum of eight (8) hours per week, may be worked on Saturday at the straight time rate.

Overtime
Time and one half the regular rate after an 8 hour day.
Time and one half the regular rate for Saturday.
Double time the regular rate for Sunday.
Saturday may be used as a make-up day at straight time when a day is lost during that week to inclement weather.
Triple time the regular rate for work on the following holiday(s).

Paid Holidays
New Year's Day
Martin Luther King Jr. Day
President's Day
Memorial Day
Independence Day
Labor Day
Columbus Day
Veteran's Day
Thanksgiving Day
Day after Thanksgiving
Christmas Day

Shift Rates
Four Days a week at Ten (10) hours straight a day.

Local 8A-28A

PAINTER - SIGN

Sign Painter

Effective Period: 7/1/2018 - 6/30/2019
Wage Rate per Hour: $41.16
Supplemental Benefit Rate per Hour: $16.04

Assistant Sign Painter

Effective Period: 7/1/2018 - 6/30/2019
Wage Rate per Hour: $34.97
Supplemental Benefit Rate per Hour: $14.92

Overtime

Time and one half the regular rate after an 8 hour day.
Time and one half the regular rate for Saturday.
Time and one half the regular rate for Sunday.
Double time the regular rate for work on the following holiday(s).

Paid Holidays

New Year's Day
President's Day
Memorial Day
Independence Day
Labor Day
Columbus Day
Election Day
Thanksgiving Day
Day after Thanksgiving
Christmas Day

Vacation

At least 1 year of employment.....1 week
2 years or more of employment.....2 weeks
8 years or more of employment.....3 weeks

(Local #8A-28A)

PAINTER - STRIPER

Striper (paint)

Effective Period: 7/1/2018 - 6/30/2019

Wage Rate per Hour: $35.00
Supplemental Benefit Rate per Hour: $12.37
Supplemental Note: Overtime Supplemental Benefit rate - $8.02; New Hire Rate (0-3 months) - $0.00

Lineperson (thermoplastic)

Effective Period: 7/1/2018 - 6/30/2019
Wage Rate per Hour: $39.00
Supplemental Benefit Rate per Hour: $12.37
Supplemental Note: Overtime Supplemental Benefit rate - $8.02; New Hire Rate (0-3 months) - $0.00

Overtime
Time and one half the regular rate after an 8 hour day.
Time and one half the regular rate for Saturday.
Double time the regular rate for Sunday.
Time and one half the regular rate for work on the following holiday(s).

Paid Holidays
New Year's Day
Good Friday
Memorial Day
Independence Day
Labor Day
Columbus Day
Presidential Election Day
Thanksgiving Day
Day after Thanksgiving
Christmas Day

Shift Rates
Employees hired before April 1, 2003: 15% night shift premium differential for work commenced at 9:00 PM or later.

Vacation
Employees with one to two years service shall accrue vacation based on hours worked: 250 hours worked - 1 day vacation; 500 hours worked - 2 days vacation; 750 hours worked - 3 days vacation; 900 hours worked - 4 days vacation; 1,000 hours worked - 5 days vacation. Employees with two to five years service receive two weeks vacation. Employees with five to twenty years service receive three weeks vacation. Employees with twenty to twenty-five years service receive four weeks vacation. Employees with 25 or more years service receive five weeks vacation. Vacation must be taken during winter months. 2 Personal Days except employees hired after 4/1/12 who do not have 2 years of service.

(Local #917)

PAINTER - STRUCTURAL STEEL

Painters on Structural Steel

Effective Period: 7/1/2018 - 6/30/2019
Wage Rate per Hour: $49.50
Supplemental Benefit Rate per Hour: $38.83

Painter - Power Tool

Effective Period: 7/1/2018 - 6/30/2019
Wage Rate per Hour: $55.50
Supplemental Benefit Rate per Hour: $38.83
Overtime Wage Rate: $6.00 above the "Painters on Structural Steel" overtime rate.

Overtime Description
Supplemental Benefits shall be paid for each hour worked, up to forty (40) hours per week for the period of May 1st to November 15th or up to fifty (50) hours per week for the period of November 16th to April 30th.

Overtime
Time and one half the regular rate after a 7 hour day.
Time and one half the regular rate for Saturday.
Time and one half the regular rate for Sunday.

Overtime Holidays
Double time the regular rate for work on the following holiday(s).
New Year's Day
Memorial Day
Independence Day
Labor Day
Thanksgiving Day
Christmas Day

Paid Holidays
None

Shift Rates
Regular hourly rates plus a ten per cent (10%) differential

(Local #806)

PAPERHANGER

Paperhanger

Effective Period: 7/1/2018 - 6/30/2019
Wage Rate per Hour: $44.89
Supplemental Benefit Rate per Hour: $33.13

Supplemental Note: Supplemental benefits are to be paid at the appropriate straight time and overtime rate.

Overtime

Time and one half the regular rate after a 7 hour day.
Time and one half the regular rate for Saturday.
Time and one half the regular rate for Sunday.

Overtime Holidays

Time and one half the regular rate for work on the following holiday(s).
New Year's Day
President's Day
Memorial Day
Independence Day
Labor Day
Thanksgiving Day
Day after Thanksgiving
Christmas Day

Paid Holidays

None

Shift Rates

Evening shift - 4:30 P.M. to 12:00 Midnight (regular rate of pay); any work performed before 7:00 A.M. shall be at time and one half the regular base rate of pay.

(District Council of Painters #9)

PAVER AND ROADBUILDER

Paver & Roadbuilder - Formsetter

Effective Period: 7/1/2018 - 6/30/2019
Wage Rate per Hour: $46.35
Supplemental Benefit Rate per Hour: $43.01
Supplemental Note: For time and one half overtime - $46.89 For double overtime - $50.76

Paver & Roadbuilder - Laborer

Paving and road construction work, regardless of material used, including but not limited to preparation of job sites, removal of old surfaces, asphalt and/or concrete, by whatever method, including but not limited to milling; laying of concrete; laying of asphalt for temporary, patchwork, and utility paving (but not production paving); site preparation and incidental work before the installation of rubberized materials and similar surfaces; installation and repair of temporary construction fencing; slurry seal coating, maintenance of safety surfaces; play equipment installation, and other related work.

Effective Period: 7/1/2018 - 6/30/2019

Wage Rate per Hour: $42.48
Supplemental Benefit Rate per Hour: $43.01
Supplemental Note: For time and one half overtime - $46.89 For double overtime - $50.76

Production Paver & Roadbuilder - Screed Person

(Production paving is asphalt paving when using a paving machine or on a project where a paving machine is traditionally used)

Adjustment of paving machinery on production paving jobs.

Effective Period: 7/1/2018 - 6/30/2019
Wage Rate per Hour: $46.95
Supplemental Benefit Rate per Hour: $43.01
Supplemental Note: For time and one half overtime - $46.89 For double overtime - $50.76

Production Paver & Roadbuilder - Raker

Effective Period: 7/1/2018 - 6/30/2019
Wage Rate per Hour: $46.35
Supplemental Benefit Rate per Hour: $43.01
Supplemental Note: For time and one half overtime - $46.89 For double overtime - $50.76

Production Paver & Roadbuilder - Shoveler

General laborer (except removal of surfaces - see Paver and Roadbuilder-Laborer) including but not limited to tamper, AC paint and liquid tar work.

Effective Period: 7/1/2018 - 6/30/2019
Wage Rate per Hour: $42.48
Supplemental Benefit Rate per Hour: $43.01
Supplemental Note: For time and one half overtime - $46.89 For double overtime - $50.76

Overtime Description

If an employee works New Year's Day or Christmas Day, they receive the single time rate plus 25%.

For Paid Holidays: Holiday pay for all holidays shall be prorated based two hours per day for each day worked in the holiday week, not to exceed 8 hours of holiday pay.

Overtime

Time and one half the regular rate after an 8 hour day.
Time and one half the regular rate for Saturday.
Double time the regular rate for Sunday.

Overtime Holidays

Double time the regular rate for work on the following holiday(s).
Memorial Day
Independence Day
Labor Day
Columbus Day
Thanksgiving Day

Paid Holidays

Memorial Day
Independence Day
Labor Day
Thanksgiving Day

Shift Rates

When two shifts are employed, the work period for each shift shall be a continuous eight (8) hours. When three shifts are employed, each shift will work seven and one half (7 ½) hours but will be paid for eight (8) hours since only one half (1/2) hour is allowed for meal time.
When two or more shifts are employed, single time will be paid for each shift.

Night Work - On night work, the first eight (8) hours of work will be paid for at the single time rate, except that production paving work shall be paid at 10% over the single time rate for the screed person, rakers and shovelers directly involved only. This differential is to be paid when there is only one shift and the shift works at night. All other workers will be exempt. Hours worked over eight (8) hours during said shift shall be paid for at the time and one-half rate.

(Local #1010)

PLASTERER

Plasterer

Effective Period: 7/1/2018 - 7/31/2018
Wage Rate per Hour: $45.58
Supplemental Benefit Rate per Hour: $25.87

Effective Period: 8/1/2018 - 6/30/2019
Wage Rate per Hour: $45.93
Supplemental Benefit Rate per Hour: $26.52

Overtime

Time and one half the regular rate after an 8 hour day.
Time and one half the regular rate for Saturday.
Double time the regular rate for Sunday.
Saturday may be used as a make-up day at straight time when a day is lost during that week to inclement weather.

Overtime Holidays

Double time the regular rate for work on the following holiday(s).
New Year's Day
President's Day
Memorial Day
Independence Day
Labor Day

Thanksgiving Day
Christmas Day

Paid Holidays
None

Shift Rates
When it is not possible to conduct work during regular working hours (between 6:30am and 4:30pm), a shift differential shall be paid at the regular hourly rate plus a twelve per cent (12%) per hour differential. Workers on shift work shall be allowed a paid one-half hour meal break.

(Local #262)

PLASTERER - TENDER

Plasterer - Tender

Effective Period: 7/1/2018 - 6/30/2019
Wage Rate per Hour: $38.40
Supplemental Benefit Rate per Hour: $31.04

Overtime
Time and one half the regular rate after an 8 hour day.
Time and one half the regular rate for Saturday.
Double time the regular rate for Sunday.
Saturday may be used as a make-up day at straight time when a day is lost during that week to inclement weather.

Overtime Holidays
Double time the regular rate for work on the following holiday(s).
New Year's Day
Washington's Birthday
Memorial Day
Independence Day
Labor Day
Presidential Election Day
Thanksgiving Day
Christmas Day

Paid Holidays
None

Shift Rates
When work commences outside regular work hours, workers receive an hour additional (differential) wage and supplement payment. Eight hours pay for seven hours work or nine hours pay for eight hours work.

(Mason Tenders District Council)

PLUMBER

Plumber

Effective Period: 7/1/2018 - 6/30/2019
Wage Rate per Hour: $68.40
Supplemental Benefit Rate per Hour: $33.80
Supplemental Note: Supplemental benefit contributions are to be made at the applicable overtime rates.

Plumber - Temporary Services

Temporary Services - When there are no Plumbers on the job site, there may be three shifts designed to cover the entire twenty-four hour period, including weekends if necessary, at the following rate straight time.

Effective Period: 7/1/2018 - 6/30/2019
Wage Rate per Hour: $54.80
Supplemental Benefit Rate per Hour: $26.96

Overtime Description

Double time the regular rate after a 7 hour day - unless for new construction site work where the plumbing contract price is $1.5 million or less, the hours of labor can be 8 hours per day at the employers option. On Alteration jobs when other mechanical trades at the site are working an eighth hour at straight time, then the plumber shall also work an eighth hour at straight time.

Overtime

Double time the regular time rate for Saturday.
Double time the regular rate for Sunday.

Overtime Holidays

Double time the regular rate for work on the following holiday(s).
New Year's Day
President's Day
Memorial Day
Independence Day
Labor Day
Columbus Day
Veteran's Day
Thanksgiving Day
Day after Thanksgiving
Christmas Day

Shift Rates

Shift work, when directly specified in public agency or authority documents where plumbing contract is $8 million or less, will be permitted. 30% shift premium shall be paid for wages and fringe benefits for 4:00 pm and

midnight shifts Monday to Friday. 50% shift premium shall be paid for wages and fringe benefits for 4:00 pm and midnight shift work performed on weekends. For shift work on holidays, double time wages and fringe benefits shall be paid.

(Plumbers Local #1)

PLUMBER (MECHNICAL EQUIPMENT AND SERVICE)

(Mechanical Equipment and Service work shall include any repair and/or replacement of the present plumbing system.)

Plumber

Effective Period: 7/1/2018 - 6/30/2019
Wage Rate per Hour: $41.55
Supplemental Benefit Rate per Hour: $16.61

Overtime

Time and one half the regular rate after an 8 hour day.
Time and one half the regular rate for Saturday.
Time and one half the regular rate for Sunday.

Overtime Holidays

Time and one half the regular rate for work on the following holiday(s).
New Year's Day
President's Day
Memorial Day
Independence Day
Thanksgiving Day
Day after Thanksgiving
Christmas Day

Paid Holidays

None

(Plumbers Local # 1)

PLUMBER (RESIDENTIAL RATES FOR 1, 2 AND 3 FAMILY HOME CONSTRUCTION)

Effective Period: 7/1/2018 - 6/30/2019

Wage Rate per Hour: $47.47
Supplemental Benefit Rate per Hour: $24.36

Overtime
Double time the regular rate after an 8 hour day.
Double time the regular time rate for Saturday.
Double time the regular rate for Sunday.

Overtime Holidays
Double time the regular rate for work on the following holiday(s).
New Year's Day
President's Day
Memorial Day
Independence Day
Labor Day
Columbus Day
Veteran's Day
Thanksgiving Day
Day after Thanksgiving
Christmas Day

Paid Holidays
None

Shift Rates
30% shift premium shall be paid for wages and fringe benefits for 4:00 pm and midnight shifts Monday to Friday. 50% shift premium shall be paid for wages and fringe benefits for 4:00 pm and midnight shift work performed on weekends. For shift work on holidays, double time wages and fringe benefits shall be paid.

(Plumbers Local #1)

PLUMBER: PUMP & TANK
Oil Trades (Installation and Maintenance)

Plumber - Pump & Tank

Effective Period: 7/1/2018 - 6/30/2019
Wage Rate per Hour: $65.65
Supplemental Benefit Rate per Hour: $25.06

Overtime
Time and one half the regular rate after an 8 hour day.
Time and one half the regular rate for Saturday.
Time and one half the regular rate for Sunday.

Overtime Holidays

Time and one half the regular rate for work on the following holiday(s).
New Year's Day
President's Day
Memorial Day
Independence Day
Labor Day
Columbus Day
Veteran's Day
Thanksgiving Day
Day after Thanksgiving
Christmas Day

Paid Holidays

None

Shift Rates

All work outside the regular workday (8:00 A.M. to 3:30 P.M.) is to be paid at time and one half the regular hourly rate

(Plumbers Local #1)

POINTER, WATERPROOFER, CAULKER, SANDBLASTER, STEAMBLASTER
(Exterior Building Renovation)

Journeyperson

Effective Period: 7/1/2018 - 6/30/2019
Wage Rate per Hour: $52.57
Supplemental Benefit Rate per Hour: $25.80

Overtime

Time and one half the regular rate after an 8 hour day.
Time and one half the regular rate for Saturday.
Time and one half the regular rate for Sunday.
Saturday may be used as a make-up day at straight time when a day is lost during that week to inclement weather.

Overtime Holidays

Time and one half the regular rate for work on the following holiday(s).
New Year's Day
Martin Luther King Jr. Day
President's Day
Memorial Day

Independence Day
Labor Day
Thanksgiving Day
Christmas Day

Paid Holidays
None

Shift Rates
All work outside the regular work day (an eight hour workday between the hours of 6:00 A.M. and 4:30 P.M.) is to be paid at time and one half the regular rate.

(Bricklayer District Council)

ROOFER

Roofer

Effective Period: 7/1/2018 - 6/30/2019
Wage Rate per Hour: $42.50
Supplemental Benefit Rate per Hour: $33.37

Overtime
Time and one half the regular rate after an 8 hour day.
Time and one half the regular rate for Saturday.
Time and one half the regular rate for Sunday.

Overtime Holidays
Time and one half the regular rate for work on the following holiday(s).
New Year's Day
Memorial Day
Independence Day
Labor Day
Thanksgiving Day
Christmas Day

Paid Holidays
None

Shift Rates
Second shift - Regular hourly rate plus a 10% differential. Third shift - Regular hourly rate plus a 15% differential.

(Local #8)

SHEET METAL WORKER

Sheet Metal Worker

Effective Period: 7/1/2018 - 6/30/2019
Wage Rate per Hour: $49.65
Supplemental Benefit Rate per Hour: $49.15
Supplemental Note: Supplemental benefit contributions are to be made at the applicable overtime rates.

Sheet Metal Worker - Fan Maintenance

(The temporary operation of fans or blowers in new or existing buildings for heating and/or ventilation, and/or air conditioning prior to the completion of the project.)

Effective Period: 7/1/2018 - 6/30/2019
Wage Rate per Hour: $39.72
Supplemental Benefit Rate per Hour: $49.15

Sheet Metal Worker - Duct Cleaner

Effective Period: 7/1/2018 - 6/30/2019
Wage Rate per Hour: $12.90
Supplemental Benefit Rate per Hour: $8.07

Overtime

Time and one half the regular rate after an 8 hour day.
Time and one half the regular rate for Saturday.
Double time the regular rate for Sunday.

Overtime Holidays

Double time the regular rate for work on the following holiday(s).
New Year's Day
Martin Luther King Jr. Day
President's Day
Memorial Day
Independence Day
Labor Day
Columbus Day
Veteran's Day
Thanksgiving Day
Day after Thanksgiving
Christmas Day

Paid Holidays

None

Shift Rates

Work that can only be performed outside regular working hours (eight hours of work between 7:30 A.M. and 3:30 P.M.) - First shift (work between 3:30 P.M. and 11:30 P.M.) - 10% differential above the established hourly rate. Second shift (work between 11:30 P.M. and 7:30 A.M.) - 15% differential above the established hourly rate.

For Fan Maintenance: On all full shifts of fan maintenance work the straight time hourly rate of pay will be paid for each shift, including nights, Saturdays, Sundays, and holidays.

(Local #28

SHEET METAL WORKER - SPECIALTY
(Decking & Siding)

Sheet Metal Specialty Worker

The first worker to perform this work must be paid at the rate of the Sheet Metal Worker. The second and third workers shall be paid the Specialty Worker Rate. The ratio of One Sheet Metal Worker, then Two Specialty Workers shall be utilized thereafter.

Effective Period: 7/1/2018 - 6/30/2019
Wage Rate per Hour: $45.26
Supplemental Benefit Rate per Hour: $25.66
Supplemental Note: Supplemental benefit contributions are to be made at the applicable overtime rates.

Overtime
Time and one half the regular rate after an 8 hour day.
Time and one half the regular rate for Saturday.
Double time the regular rate for Sunday.

Overtime Holidays
Double time the regular rate for work on the following holiday(s).
New Year's Day
Martin Luther King Jr. Day
President's Day
Memorial Day
Independence Day
Labor Day
Columbus Day
Veteran's Day
Thanksgiving Day
Christmas Day

Paid Holidays
None

(Local #28)

SHIPYARD WORKER

Shipyard Mechanic - First Class

Effective Period: 7/1/2018 - 6/30/2019
Wage Rate per Hour: $28.19
Supplemental Benefit Rate per Hour: $3.03

Shipyard Mechanic - Second Class

Effective Period: 7/1/2018 - 6/30/2019
Wage Rate per Hour: $20.87
Supplemental Benefit Rate per Hour: $2.75

Shipyard Laborer - First Class

Effective Period: 7/1/2018 - 6/30/2019
Wage Rate per Hour: $21.89
Supplemental Benefit Rate per Hour: $2.79

Shipyard Laborer - Second Class

Effective Period: 7/1/2018 - 6/30/2019
Wage Rate per Hour: $15.71
Supplemental Benefit Rate per Hour: $2.55

Shipyard Dockhand - First Class

Effective Period: 7/1/2018 - 6/30/2019
Wage Rate per Hour: $21.57
Supplemental Benefit Rate per Hour: $2.78

Shipyard Dockhand - Second Class

Effective Period: 7/1/2018 - 6/30/2019
Wage Rate per Hour: $16.96
Supplemental Benefit Rate per Hour: $2.60

Overtime Description
Work performed on holiday is paid double time the regular hourly wage rate plus holiday pay.

Overtime
Time and one half the regular rate after an 8 hour day.
Time and one half the regular rate for Saturday.

Double time the regular rate for Sunday.
Time and one half the regular hourly rate after 40 hours in any work week.

Paid Holidays

New Year's Day
Martin Luther King Jr. Day
President's Day
Good Friday
Memorial Day
Independence Day
Labor Day
Thanksgiving Day
Day after Thanksgiving
Christmas Day

Based on Survey Data

SIGN ERECTOR
(Sheet Metal, Plastic, Electric, and Neon)

Sign Erector

Effective Period: 7/1/2018 - 6/30/2019
Wage Rate per Hour: $48.50
Supplemental Benefit Rate per Hour: $52.89

Overtime

Time and one half the regular rate after a 7 hour day.
Time and one half the regular rate for Saturday.
Time and one half the regular rate for Sunday.
Time and one half the regular rate for work on the following holiday(s).

Paid Holidays

New Year's Day
President's Day
Memorial Day
Independence Day
Labor Day
Columbus Day
Election Day
Thanksgiving Day
Day after Thanksgiving
Christmas Day

Shift Rates

Time and one half the regular hourly rate is to be paid for all hours worked outside the regular workday either (7:00 A.M. through 2:30 P.M.) or (8:00 A.M. through 3:30 P.M.)

(Local #137)

STEAMFITTER

Steamfitter I

Effective Period: 7/1/2018 - 6/30/2019
Wage Rate per Hour: $57.25
Supplemental Benefit Rate per Hour: $55.79
Supplemental Note: Overtime supplemental benefit rate: $110.84

Steamfitter -Temporary Services

The steamfitters shall not do any other work and shall not be permitted to work more than one shift in a twenty-four hour day. When steamfitters are present during the regular working day, no temporary services steamfitter will be required

Effective Period: 7/1/2018 - 6/30/2019
Wage Rate per Hour: $43.51
Supplemental Benefit Rate per Hour: $45.22

Overtime
Double time the regular rate after a 7 hour day.
Double time the regular time rate for Saturday.
Double time the regular rate for Sunday.

Overtime Holidays
Double time the regular rate for work on the following holiday(s).
New Year's Day
President's Day
Memorial Day
Independence Day
Labor Day
Columbus Day
Veteran's Day
Thanksgiving Day
Day after Thanksgiving
Christmas Day

Paid Holidays
None

Shift Rates

Work performed between 3:30 P.M. and 7:00 A.M. and on Saturdays, Sundays and Holidays shall be at double time the regular hourly rate and paid at the overtime supplemental benefit rate above.

Steamfitter II

For heating, ventilation, air conditioning and mechanical public work contracts with a dollar value not to exceed $15,000,000 and for fire protection/sprinkler public work contracts not to exceed $1,500,000.

Effective Period: 7/1/2018 - 6/30/2019
Wage Rate per Hour: $57.25
Supplemental Benefit Rate per Hour: $55.79
Supplemental Note: Overtime supplemental benefit rate: $110.84

Steamfitter -Temporary Services

The steamfitters shall not do any other work and shall not be permitted to work more than one shift in a twenty-four hour day. When steamfitters are present during the regular working day, no temporary services steamfitter will be required.

Effective Period: 7/1/2018 - 6/30/2019
Wage Rate per Hour: $43.51
Supplemental Benefit Rate per Hour: $45.22

Overtime
Double time the regular rate after an 8 hour day.
Double time the regular time rate for Saturday.
Double time the regular rate for Sunday.

Overtime Holidays
Double time the regular rate for work on the following holiday(s).
New Year's Day
President's Day
Memorial Day
Independence Day
Labor Day
Columbus Day
Veteran's Day
Thanksgiving Day
Day after Thanksgiving
Christmas Day

Paid Holidays
None

Shift Rates
May be performed outside of the regular workday except Saturday, Sunday and Holidays. A shift shall consist of eight working hours. All work performed in excess of eight hours shall be paid at double time. No shift shall commence after 7:00 P.M. on Friday or 7:00 P.M. the day before holidays. All work performed after 12:01 A.M.

Saturday or 12:01 A.M. the day before a Holiday will be paid at double time. When shift work is performed the wage rate for regular time worked is a thirty percent premium together with fringe benefits.

On Transit Authority projects, where work is performed in the vicinity of tracks all shift work on weekends and holidays may be performed at the regular shift rates.

Local #638

STEAMFITTER - REFRIGERATION AND AIR CONDITIONER
(Maintenance and Installation Service Person)

Refrigeration and Air Conditioner Mechanic

Effective Period: 7/1/2018 - 6/30/2019
Wage Rate per Hour: $41.50
Supplemental Benefit Rate per Hour: $16.56

Refrigeration and Air Conditioner Service Person V

Effective Period: 7/1/2018 - 6/30/2019
Wage Rate per Hour: $34.10
Supplemental Benefit Rate per Hour: $14.80

Refrigeration and Air Conditioner Service Person IV

Effective Period: 7/1/2018 - 6/30/2019
Wage Rate per Hour: $28.25
Supplemental Benefit Rate per Hour: $13.36

Refrigeration and Air Conditioner Service Person III

Filter changing and maintenance thereof, oil and greasing, tower and coil cleaning, scraping and painting, general housekeeping, taking of water samples.

Effective Period: 7/1/2018 - 6/30/2019
Wage Rate per Hour: $24.24
Supplemental Benefit Rate per Hour: $12.29

Refrigeration and Air Conditioner Service Person II

Filter changing and maintenance thereof, oil and greasing, tower and coil cleaning, scraping and painting, general housekeeping, taking of water samples.

Effective Period: 7/1/2018 - 6/30/2019

Wage Rate per Hour: $20.10
Supplemental Benefit Rate per Hour: $11.29

Refrigeration and Air Conditioner Service Person I

Filter changing and maintenance thereof, oil and greasing, tower and coil cleaning, scraping and painting, general housekeeping, taking of water samples.

Effective Period: 7/1/2018 - 6/30/2019
Wage Rate per Hour: $14.71
Supplemental Benefit Rate per Hour: $10.12

Overtime
Time and one half the regular rate after an 8 hour day.
Time and one half the regular rate for Saturday.
Double time the regular rate for Sunday.

Overtime Holidays
Double time the regular rate for work on the following holiday(s).
New Year's Day
Independence Day
Labor Day
Veteran's Day
Thanksgiving Day
Christmas Day

Double time and one half the regular rate for work on the following holiday(s).
Martin Luther King Jr. Day
President's Day
Memorial Day
Columbus Day

Paid Holidays
New Year's Day
Martin Luther King Jr. Day
President's Day
Memorial Day
Independence Day
Labor Day
Columbus Day
Veteran's Day
Thanksgiving Day
Christmas Day

(Local #638B)

STONE MASON - SETTER

Stone Mason - Setter

Effective Period: 7/1/2018 - 6/30/2019
Wage Rate per Hour: $53.62
Supplemental Benefit Rate per Hour: $41.65

Overtime
Time and one half the regular rate after a 7 hour day.
Time and one half the regular rate for Saturday.
Double time the regular rate for Sunday.

Overtime Holidays
Double time the regular rate for work on the following holiday(s).
New Year's Day
Washington's Birthday
Good Friday
Memorial Day
Independence Day
Labor Day
Thanksgiving Day
Christmas Day

Paid Holidays
1/2 day on Christmas Eve if work is performed in the A.M.

Shift Rates
For all work outside the regular workday (8:00 A.M. to 3:30 P.M. Monday through Friday), the pay shall be straight time plus a ten percent (10%) differential.

(Bricklayers District Council)

TAPER

Drywall Taper

Effective Period: 7/1/2018 - 6/30/2019
Wage Rate per Hour: $47.82
Supplemental Benefit Rate per Hour: $25.61

Overtime
Time and one half the regular rate after a 7 hour day.
Time and one half the regular rate for Saturday.
Time and one half the regular rate for Sunday.

Overtime Holidays

Time and one half the regular rate for work on the following holiday(s).
New Year's Day
Martin Luther King Jr. Day
President's Day
Good Friday
Memorial Day
Independence Day
Labor Day
Columbus Day
Thanksgiving Day
Christmas Day

Paid Holidays

Any worker who reports to work on Christmas Eve or New Year's Eve pursuant to his employer's instruction shall be entitled to three (3) hours afternoon pay without working.

(Local #1974)

TELECOMMUNICATION WORKER

(Install/maintain/repair telecommunications cables carrying data, video, and/or voice except for installation on building construction/alteration/renovation projects. Locate & mark underground telecommunications cables and utilities for street excavation.)

Telecommunication Worker

Effective Period: 7/1/2018 - 6/30/2019
Wage Rate per Hour: $43.66
Supplemental Benefit Rate per Hour: $23.15
Supplemental Note: The above rate applies for Manhattan, Bronx, Brooklyn, Queens. $22.84 for Staten Island only.

Overtime

Time and one half the regular rate after an 8 hour day.
Time and one half the regular rate for Saturday.
Time and one half the regular rate for Sunday.

Overtime Holidays

Time and one half the regular rate for work on the following holiday(s).
New Year's Day
Lincoln's Birthday
Washington's Birthday
Memorial Day

Independence Day
Labor Day
Columbus Day
Election Day
Veteran's Day
Thanksgiving Day
Christmas Day

Paid Holidays

New Year's Day
Lincoln's Birthday
Washington's Birthday
Memorial Day
Independence Day
Labor Day
Columbus Day
Election Day
Veteran's Day
Thanksgiving Day
Christmas Day
Employees have the option of observing either Martin Luther King's Birthday or the day after Thanksgiving instead of Lincoln's Birthday

Shift Rates

For any workday that starts before 8A.M. or ends after 6P.M. there is a 10% differential for the applicable worker's hourly rate.

Vacation

After 6 months.....one week.
After 12 months but less than 7 years.....two weeks.
After 7 or more but less than 15 years.....three weeks.
After 15 years or more but less than 25 years.....four weeks.

(C.W.A.)

TILE FINISHER

Tile Finisher

Effective Period: 7/1/2018 - 6/30/2019
Wage Rate per Hour: $41.77
Supplemental Benefit Rate per Hour: $30.87

Overtime

Time and one half the regular rate after a 7 hour day.
Time and one half the regular rate for Saturday.
Double time the regular rate for Sunday.

Overtime Holidays

Double time the regular rate for work on the following holiday(s).
New Year's Day
President's Day
Good Friday
Memorial Day
Independence Day
Labor Day
Columbus Day
Veteran's Day
Thanksgiving Day
Day after Thanksgiving
Christmas Day

Paid Holidays

None

Shift Rates

Off shift work day (work performed outside the regular 8:00 A.M. to 3:30 P.M. workday): shift differential of one and one quarter (1¼) times the regular straight time rate of pay for the seven hours of actual off-shift work.

(Local #7)

TILE LAYER - SETTER

Tile Layer - Setter

Effective Period: 7/1/2018 - 6/30/2019
Wage Rate per Hour: $53.98
Supplemental Benefit Rate per Hour: $35.38

Overtime

Time and one half the regular rate after a 7 hour day.
Time and one half the regular rate for Saturday.
Double time the regular rate for Sunday.

Overtime Holidays

Double time the regular rate for work on the following holiday(s).
New Year's Day
President's Day
Good Friday
Memorial Day
Independence Day
Labor Day
Columbus Day
Veteran's Day
Thanksgiving Day

Day after Thanksgiving
Christmas Day

Shift Rates

Off shift work day (work performed outside the regular 8:00 A.M. to 3:30 P.M. workday): shift differential of one and one quarter (1¼) times the regular straight time rate of pay for the seven hours of actual off-shift work.

(Local #7)

TIMBERPERSON

Timberperson

Effective Period: 7/1/2018 - 6/30/2019
Wage Rate per Hour: $49.10
Supplemental Benefit Rate per Hour: $49.97

Overtime

Time and one half the regular rate after an 8 hour day.
Time and one half the regular rate for Saturday.
Double time the regular rate for Sunday.
Saturday may be used as a make-up day at straight time when a day is lost during that week to inclement weather.
Time and one half the regular hourly rate after 40 hours in any work week.

Overtime Holidays

Double time the regular rate for work on the following holiday(s).
New Year's Day
President's Day
Memorial Day
Independence Day
Labor Day
Columbus Day
Presidential Election Day
Thanksgiving Day
Christmas Day

Paid Holidays

None

Shift Rates

Off shift work commencing between 5:00 P.M. and 11:00 P.M. shall work eight and one half hours allowing for one half hour for lunch. The wage rate shall be 113% of the straight time hourly wage rate.

(Local #1536)

TUNNEL WORKER

Blasters, Mucking Machine Operators (Compressed Air Rates)

Effective Period: 7/1/2018 - 6/30/2019
Wage Rate per Hour: $62.37
Supplemental Benefit Rate per Hour: $52.39

Tunnel Workers (Compressed Air Rates)

Effective Period: 7/1/2018 - 6/30/2019
Wage Rate per Hour: $60.21
Supplemental Benefit Rate per Hour: $50.65

Top Nipper (Compressed Air Rates)

Effective Period: 7/1/2018 - 6/30/2019
Wage Rate per Hour: $59.11
Supplemental Benefit Rate per Hour: $49.74

Outside Lock Tender, Outside Gauge Tender,Muck Lock Tender (Compressed Air Rates)

Effective Period: 7/1/2018 - 6/30/2019
Wage Rate per Hour: $58.04
Supplemental Benefit Rate per Hour: $48.81

Bottom Bell & Top Bell Signal Person: Shaft Person (Compressed Air Rates)

Effective Period: 7/1/2018 - 6/30/2019
Wage Rate per Hour: $58.04
Supplemental Benefit Rate per Hour: $48.81

Changehouse Attendant: Powder Watchperson (Compressed Air Rates)

Effective Period: 7/1/2018 - 6/30/2019
Wage Rate per Hour: $50.87
Supplemental Benefit Rate per Hour: $46.11

Blasters (Free Air Rates)

Effective Period: 7/1/2018 - 6/30/2019
Wage Rate per Hour: $59.52

Supplemental Benefit Rate per Hour: $50.03

Tunnel Workers (Free Air Rates)

Effective Period: 7/1/2018 - 6/30/2019
Wage Rate per Hour: $56.97
Supplemental Benefit Rate per Hour: $47.89

All Others (Free Air Rates)

Effective Period: 7/1/2018 - 6/30/2019
Wage Rate per Hour: $52.63
Supplemental Benefit Rate per Hour: $44.29

Microtunneling (Free Air Rates)

Effective Period: 7/1/2018 - 6/30/2019
Wage Rate per Hour: $45.58
Supplemental Benefit Rate per Hour: $38.31

Overtime Description

For Repair-Maintenance Work on Existing Equipment and Facilities - Time and one half the regular rate after a 7 hour day, or for Saturday, or for Sunday. Double time the regular rate for work on a holiday.
For Small-Bore Micro Tunneling Machines - Time and one-half the regular rate shall be paid for all overtime.

Overtime

Double time the regular rate after an 8 hour day.
Double time the regular time rate for Saturday.
Double time the regular rate for Sunday.
Double time the regular rate for work on the following holiday(s).

Paid Holidays

New Year's Day
Lincoln's Birthday
President's Day
Memorial Day
Independence Day
Labor Day
Columbus Day
Election Day
Veteran's Day
Thanksgiving Day
Christmas Day

(Local #147)

WELDER
TO BE PAID AT THE RATE OF THE JOURNEYPERSON IN THE TRADE PERFORMING THE WORK.

OFFICE OF THE COMPTROLLER
CITY OF NEW YORK

CONSTRUCTION APPRENTICE
PREVAILING WAGE SCHEDULE

Pursuant to Labor Law § 220 (3-e), only apprentices who are individually registered in a bona fide program to which the employer contractor is a participant and registered with the New York State Department of Labor, may be paid at the apprentice rates in this schedule. Apprentices who are not so registered must be paid as journey persons in accordance with the trade classification of the work they actually performed.

Apprentice ratios are established to ensure the proper safety, training and supervision of apprentices. A ratio establishes the number of journey workers required for each apprentice in a program and on a job site. Ratios are interpreted as follows: in the case of a 1:1, 1:4 ratio, there must be one journey worker for the first apprentice, and four additional journey workers for each subsequent apprentice.

TABLE OF CONTENTS

CLASSIFICATION	PAGE
BOILERMAKER	3
BRICKLAYER	4
CARPENTER	5
CARPENTER - HIGH RISE CONCRETE FORMS	5
CEMENT MASON	6
CEMENT AND CONCRETE WORKER	7
DERRICKPERSON & RIGGER (STONE)	7
DOCKBUILDER/PILE DRIVER	8
ELECTRICIAN	9
ELEVATOR CONSTRUCTOR	11
ELEVATOR REPAIR & MAINTENANCE	11
ENGINEER	12
ENGINEER - OPERATING	13
FLOOR COVERER	13
GLAZIER	14
HAZARDOUS MATERIAL HANDLER	15
HEAT & FROST INSULATOR	15
HOUSE WRECKER	16
IRON WORKER - ORNAMENTAL	17
IRON WORKER - STRUCTURAL	17
LABORER (FOUNDATION, CONCRETE, EXCAVATING, STREET PIPE LAYER & COMMON)	18
MARBLE MECHANICS	19
MASON TENDER	20
METALLIC LATHER	21
MILLWRIGHT	22
PAINTER	22
PAINTER - METAL POLISHER	23
PAINTER - STRUCTURAL STEEL	24
PAVER AND ROADBUILDER	24
PLASTERER	25
PLASTERER - TENDER	26
PLUMBER	27
POINTER, WATERPROOFER, CAULKER, SANDBLASTER, STEAMBLASTER	28
ROOFER	29
SHEET METAL WORKER	29
SIGN ERECTOR	30
STEAMFITTER	32
STONE MASON - SETTER	32
TAPER	33
TILE LAYER - SETTER	34
TIMBERPERSON	35

BOILERMAKER
(Ratio of Apprentice to Journeyperson: 1 to 1, 1 to 3)

Boilermaker (First Year)

Effective Period: 7/1/2018 - 6/30/2019
Wage Rate Per Hour: 65% of Journeyperson's rate
Supplemental Benefit Rate Per Hour: $31.26

Boilermaker (Second Year: 1st Six Months)

Effective Period: 7/1/2018 - 6/30/2019
Wage Rate Per Hour: 70% of Journeyperson's rate
Supplemental Benefit Rate Per Hour: $33.02

Boilermaker (Second Year: 2nd Six Months)

Effective Period: 7/1/2018 - 6/30/2019
Wage Rate Per Hour: 75% of Journeyperson's rate
Supplemental Benefit Rate Per Hour: $34.78

Boilermaker (Third Year: 1st Six Months)

Effective Period: 7/1/2018 - 6/30/2019
Wage Rate Per Hour: 80% of Journeyperson's rate
Supplemental Benefit Rate Per Hour: $36.56

Boilermaker (Third Year: 2nd Six Months)

Effective Period: 7/1/2018 - 6/30/2019
Wage Rate Per Hour: 85% of Journeyperson's rate
Supplemental Benefit Rate Per Hour: $38.32

Boilermaker (Fourth Year: 1st Six Months)

Effective Period: 7/1/2018 - 6/30/2019
Wage Rate Per Hour: 90% of Journeyperson's rate
Supplemental Benefit Rate Per Hour: $40.09

Boilermaker (Fourth Year: 2nd Six Months)

Effective Period: 7/1/2018 - 6/30/2019
Wage Rate Per Hour: 95% of Journeyperson's rate
Supplemental Benefit Rate Per Hour: $41.84

(Local #5)

BRICKLAYER
(Ratio of Apprentice to Journeyperson: 1 to 1, 1 to 4)

Bricklayer (First 750 Hours)

Effective Period: 7/1/2018 - 6/30/2019
Wage Rate Per Hour: 50% of Journeyperson's rate
Supplemental Benefit Rate Per Hour: $18.80

Bricklayer (Second 750 Hours)

Effective Period: 7/1/2018 - 6/30/2019
Wage Rate Per Hour: 60% of Journeyperson's rate
Supplemental Benefit Rate Per Hour: $18.80

Bricklayer (Third 750 Hours)

Effective Period: 7/1/2018 - 6/30/2019
Wage Rate Per Hour: 70% of Journeyperson's rate
Supplemental Benefit Rate Per Hour: $18.80

Bricklayer (Fourth 750 Hours)

Effective Period: 7/1/2018 - 6/30/2019
Wage Rate Per Hour: 80% of Journeyperson's rate
Supplemental Benefit Rate Per Hour: $18.80

Bricklayer (Fifth 750 Hours)

Effective Period: 7/1/2018 - 6/30/2019
Wage Rate Per Hour: 90% of Journeyperson's rate
Supplemental Benefit Rate Per Hour: $18.80

Bricklayer (Sixth 750 Hours)

Effective Period: 7/1/2018 - 6/30/2019
Wage Rate Per Hour: 95% of Journeyperson's rate
Supplemental Benefit Rate Per Hour: $18.80

(Bricklayer District Council)

CARPENTER
(Ratio of Apprentice to Journeyperson: 1 to 1, 1 to 4)

Carpenter (First Year)

Effective Period: 7/1/2018 - 6/30/2019
Wage Rate Per Hour: 40% of Journeyperson's rate
Supplemental Benefit Rate Per Hour For Building Apprentice: $31.34
Supplemental Benefit Rate Per Hour For Heavy Apprentice: $33.54

Carpenter (Second Year)

Effective Period: 7/1/2018 - 6/30/2019
Wage Rate Per Hour: 50% of Journeyperson's rate
Supplemental Benefit Rate Per Hour For Building Apprentice: $31.34
Supplemental Benefit Rate Per Hour For Heavy Apprentice: $33.54

Carpenter (Third Year)

Effective Period: 7/1/2018 - 6/30/2019
Wage Rate Per Hour: 65% of Journeyperson's rate
Supplemental Benefit Rate Per Hour For Building Apprentice: $31.34
Supplemental Benefit Rate Per Hour For Heavy Apprentice: $33.54

Carpenter (Fourth Year)

Effective Period: 7/1/2018 - 6/30/2019
Wage Rate Per Hour: 80% of Journeyperson's rate
Supplemental Benefit Rate Per Hour For Building Apprentice: $31.34
Supplemental Benefit Rate Per Hour For Heavy Apprentice: $33.54

(Carpenters District Council)

CARPENTER - HIGH RISE CONCRETE FORMS
(Ratio of Apprentice to Journeyperson: 1 to 1, 2 to 5)

Carpenter - High Rise (First Year)

Effective Period: 7/1/2018 - 6/30/2019
Wage Rate per Hour: $17.52
Supplemental Benefit Rate per Hour: $16.20

Carpenter - High Rise (Second Year)

Effective Period: 7/1/2018 - 6/30/2019
Wage Rate per Hour: $23.95
Supplemental Benefit Rate per Hour: $16.33

Carpenter - High Rise (Third Year)

Effective Period: 7/1/2018 - 6/30/2019
Wage Rate per Hour: $30.53
Supplemental Benefit Rate per Hour: $16.46

Carpenter - High Rise (Fourth Year)

Effective Period: 7/1/2018 - 6/30/2019
Wage Rate per Hour: $38.15
Supplemental Benefit Rate per Hour: $16.61

(Carpenters District Council)

CEMENT MASON
(Ratio of Apprentice to Journeyperson: 1 to 1, 1 to 4)

Cement Mason (First Year)

Effective Period: 7/1/2018 - 6/30/2019
Wage and Supplemental Rate Per Hour: 50% of Journeyperson's Rate

Cement Mason (Second Year)

Effective Period: 7/1/2018 - 6/30/2019
Wage and Supplemental Rate Per Hour: 60% of Journeyperson's Rate

Cement Mason (Third Year)

Effective Period: 7/1/2018 - 6/30/2019
Wage and Supplemental Rate Per Hour: 70% of Journeyperson's Rate

(Local #780)

CEMENT AND CONCRETE WORKER
(Ratio of Apprentice to Journeyperson: 1 to 1, 1 to 3)

Cement & Concrete Worker (First 1333 hours)

Effective Period: 7/1/2018 - 6/30/2019
Wage Rate Per Hour: 50% of Journeyperson's rate
Supplemental Benefit Rate Per Hour: $17.75

Cement & Concrete Worker (Second 1333 hours)

Effective Period: 7/1/2018 - 6/30/2019
Wage Rate Per Hour: 65% of Journeyperson's rate
Supplemental Benefit Rate Per Hour: $23.03

Cement & Concrete Worker (Last 1334 hours)

Effective Period: 7/1/2018 - 6/30/2019
Wage Rate Per Hour: 80% of Journeyperson's rate
Supplemental Benefit Rate Per Hour: $24.30

Cement & Concrete Worker (Hired after 2/6/2016 - First 1334 hours)

Effective Period: 7/1/2018 - 6/30/2019
Wage Rate Per Hour: $16.96
Supplemental Benefit Rate Per Hour: $11.80

Cement & Concrete Worker (Hired after 2/6/2016 - Second 1334 hours)

Effective Period: 7/1/2018 - 6/30/2019
Wage Rate Per Hour: $22.08
Supplemental Benefit Rate Per Hour: $16.49

Cement & Concrete Worker (Hired after 2/6/2016 - Last 1334 hours)

Effective Period: 7/1/2018 - 6/30/2019
Wage Rate Per Hour: $27.20
Supplemental Benefit Rate Per Hour: $17.33

(Cement Concrete Workers District Council)

DERRICKPERSON & RIGGER (STONE)
(Ratio of Apprentice to Journeyperson: 1 to 1, 1 to 4)

Derrickperson & Rigger (stone) - First Year

Effective Period: 7/1/2018 - 6/30/2019
Wage Rate Per Hour: 50% of Journeyperson's rate
Supplemental Benefit Rate Per Hour: 50% of Journeyperson's rate

Derrickperson & Rigger (stone) - Second Year: 1st Six Months

Effective Period: 7/1/2018 - 6/30/2019
Wage Rate Per Hour: 70% of Journeyperson's rate
Supplemental Benefit Rate Per Hour: 75% of Journeyperson's rate

Derrickperson & Rigger (stone) - Second Year: 2nd Six Months

Effective Period: 7/1/2018 - 6/30/2019
Wage Rate Per Hour: 80% of Journeyperson's rate
Supplemental Benefit Rate Per Hour: 75% of Journeyperson's rate

Derrickperson & Rigger (stone) - Third Year

Effective Period: 7/1/2018 - 6/30/2019
Wage Rate Per Hour: 90% of Journeyperson's rate
Supplemental Benefit Rate Per Hour: 75% of Journeyperson's rate

(Local #197)

DOCKBUILDER/PILE DRIVER
(Ratio of Apprentice to Journeyperson: 1 to 1, 1 to 6)

Dockbuilder/Pile Driver (First Year)

Effective Period: 7/1/2018 - 6/30/2019
Wage Rate Per Hour: 40% of Journeyperson's rate
Supplemental Benefit Rate Per Hour: $33.54

Dockbuilder/Pile Driver (Second Year)

Effective Period: 7/1/2018 - 6/30/2019
Wage Rate Per Hour: 50% of Journeyperson's rate
Supplemental Benefit Rate Per Hour: $33.54

Dockbuilder/Pile Driver (Third Year)

Effective Period: 7/1/2018 - 6/30/2019

Wage Rate Per Hour: 65% of Journeyperson's rate
Supplemental Benefit Rate Per Hour: $33.54

Dockbuilder/Pile Driver (Fourth Year)

Effective Period: 7/1/2018 - 6/30/2019
Wage Rate Per Hour: 80% of Journeyperson's rate
Supplemental Benefit Rate Per Hour: $33.54

(Carpenters District Council)

ELECTRICIAN
(Ratio of Apprentice to Journeyperson: 1 to 1, 1 to 3)

Electrician (First Term: 0-6 Months)

Effective Period: 7/1/2018 - 6/30/2019
Wage Rate per Hour: $14.50
Supplemental Benefit Rate per Hour: $12.63
Overtime Supplemental Rate Per Hour: $13.58

Electrician (First Term: 7-12 Months)

Effective Period: 7/1/2018 - 6/30/2019
Wage Rate per Hour: $15.50
Supplemental Benefit Rate per Hour: $13.14
Overtime Supplemental Rate Per Hour: $14.16

Electrician (Second Term: 0-6 Months)

Effective Period: 7/1/2018 - 6/30/2019
Wage Rate per Hour: $16.50
Supplemental Benefit Rate per Hour: $13.64
Overtime Supplemental Rate Per Hour: $14.73

Electrician (Second Term: 7-12 Months)

Effective Period: 7/1/2018 - 6/30/2019
Wage Rate per Hour: $17.50
Supplemental Benefit Rate per Hour: $14.15
Overtime Supplemental Rate Per Hour: $15.31

Electrician (Third Term: 0-6 Months)

Effective Period: 7/1/2018 - 6/30/2019
Wage Rate per Hour: $18.50
Supplemental Benefit Rate per Hour: $14.66
Overtime Supplemental Rate Per Hour: $15.88

Electrician (Third Term: 7-12 Months)

Effective Period: 7/1/2018 - 6/30/2019
Wage Rate per Hour: $19.50
Supplemental Benefit Rate per Hour: $15.17
Overtime Supplemental Rate Per Hour: $16.45

Electrician (Fourth Term: 0-6 Months)

Effective Period: 7/1/2018 - 6/30/2019
Wage Rate per Hour: $20.50
Supplemental Benefit Rate per Hour: $15.68
Overtime Supplemental Rate Per Hour: $17.03

Electrician (Fourth Term: 7-12 Months)

Effective Period: 7/1/2018 - 6/30/2019
Wage Rate per Hour: $22.50
Supplemental Benefit Rate per Hour: $16.70
Overtime Supplemental Rate Per Hour: $18.18

Electrician (Fifth Term: 0-12 Months)

Effective Period: 7/1/2018 - 6/30/2019
Wage Rate per Hour: $24.50
Supplemental Benefit Rate per Hour: $20.30
Overtime Supplemental Rate Per Hour: $21.84

Electrician (Fifth Term: 13-18 Months)

Effective Period: 7/1/2018 - 6/30/2019
Wage Rate per Hour: $29.00
Supplemental Benefit Rate per Hour: $22.65
Overtime Supplemental Rate Per Hour: $24.47

Overtime Description

Overtime Wage paid at time and one half the regular rate

(Local #3)

ELEVATOR CONSTRUCTOR
(Ratio of Apprentice to Journeyperson: 1 to 1, 1 to 2)

Elevator (Constructor) - First Year

Effective Period: 7/1/2018 - 6/30/2019
Wage Rate Per Hour: 50% of Journeyperson's rate
Supplemental Rate Per Hour: $30.89

Elevator (Constructor) - Second Year

Effective Period: 7/1/2018 - 6/30/2019
Wage Rate Per Hour: 55% of Journeyperson's rate
Supplemental Rate Per Hour: $31.38

Elevator (Constructor) - Third Year

Effective Period: 7/1/2018 - 6/30/2019
Wage Rate Per Hour: 65% of Journeyperson's rate
Supplemental Rate Per Hour: $32.36

Elevator (Constructor) - Fourth Year

Effective Period: 7/1/2018 - 6/30/2019
Wage Rate Per Hour: 75% of Journeyperson's rate
Supplemental Rate Per Hour: $33.34

(Local #1)

ELEVATOR REPAIR & MAINTENANCE
(Ratio of Apprentice to Journeyperson: 1 to 1, 1 to 2)

Elevator Service/Modernization Mechanic (First Year)

Effective Period: 7/1/2018 - 6/30/2019
Wage Rate Per Hour: 50% of Journeyperson's rate
Supplemental Benefit Per Hour: $30.82

Elevator Service/Modernization Mechanic (Second Year)

Effective Period: 7/1/2018 - 6/30/2019
Wage Rate Per Hour: 55% of Journeyperson's rate
Supplemental Benefit Per Hour: $31.30

Elevator Service/Modernization Mechanic (Third Year)

Effective Period: 7/1/2018 - 6/30/2019
Wage Rate Per Hour: 65% of Journeyperson's rate
Supplemental Benefit Per Hour: $32.26

Elevator Service/Modernization Mechanic (Fourth Year)

Effective Period: 7/1/2018 - 6/30/2019
Wage Rate Per Hour: 75% of Journeyperson's rate
Supplemental Benefit Per Hour: $33.23

(Local #1)

ENGINEER
(Ratio of Apprentice to Journeyperson: 1 to 1, 1 to 5)

Engineer - First Year

Effective Period: 7/1/2018 - 6/30/2019
Wage Rate per Hour: $25.38
Supplemental Benefit Rate per Hour: $25.53

Engineer - Second Year

Effective Period: 7/1/2018 - 6/30/2019
Wage Rate per Hour: $31.72
Supplemental Benefit Rate per Hour: $25.53

Engineer - Third Year

Effective Period: 7/1/2018 - 6/30/2019
Wage Rate per Hour: $34.89
Supplemental Benefit Rate per Hour: $25.53

Engineer - Fourth Year

Effective Period: 7/1/2018 - 6/30/2019
Wage Rate per Hour: $38.06
Supplemental Benefit Rate per Hour: $25.53

(Local #15)

ENGINEER - OPERATING
(Ratio of Apprentice to Journeyperson: 1 to 1, 1 to 5)

Operating Engineer - First Year

Effective Period: 7/1/2018 - 6/30/2019
Wage Rate Per Hour 40% of Journeyperson's Rate
Supplemental Benefit Per Hour: $21.60

Operating Engineer - Second Year

Effective Period: 7/1/2018 - 6/30/2019
Wage Rate Per Hour: 50% of Journeyperson's Rate
Supplemental Benefit Per Hour: $21.60

Operating Engineer - Third Year

Effective Period: 7/1/2018 - 6/30/2019
Wage Rate Per Hour: 60% of Journeyperson's Rate
Supplemental Benefit Per Hour: $21.60

(Local #14)

FLOOR COVERER
(Ratio of Apprentice to Journeyperson: 1 to 1, 1 to 4)

Floor Coverer (First Year)

Effective Period: 7/1/2018 - 6/30/2019
Wage Rate Per Hour: 40% of Journeyperson's rate
Supplemental Rate Per Hour: $31.14

Floor Coverer (Second Year)

Effective Period: 7/1/2018 - 6/30/2019
Wage Rate Per Hour: 50% of Journeyperson's rate
Supplemental Rate Per Hour: $31.14

Floor Coverer (Third Year)

Effective Period: 7/1/2018 - 6/30/2019
Wage Rate Per Hour: 65% of Journeyperson's rate
Supplemental Rate Per Hour: $31.14

Floor Coverer (Fourth Year)

Effective Period: 7/1/2018 - 6/30/2019
Wage Rate Per Hour: 80% of Journeyperson's rate
Supplemental Rate Per Hour: $31.14

(Carpenters District Council)

GLAZIER
(Ratio of Apprentice to Journeyperson: 1 to 1, 1 to 3)

Glazier (First Year)

Effective Period: 7/1/2018 - 6/30/2019
Wage Rate Per Hour: 40% of Journeyperson's rate
Supplemental Rate Per Hour: $15.66

Glazier (Second Year)

Effective Period: 7/1/2018 - 6/30/2019
Wage Rate Per Hour: 50% of Journeyperson's rate
Supplemental Rate Per Hour: $25.76

Glazier (Third Year)

Effective Period: 7/1/2018 - 6/30/2019
Wage Rate Per Hour: 60% of Journeyperson's rate
Supplemental Rate Per Hour: $29.02

Glazier (Fourth Year)

Effective Period: 7/1/2018 - 6/30/2019
Wage Rate Per Hour: 80% of Journeyperson's rate
Supplemental Rate Per Hour: $35.07

(Local #1281)

HAZARDOUS MATERIAL HANDLER
(Ratio of Apprentice Journeyperson: 1 to 1, 1 to 3)

Handler (First 1000 Hours)

Effective Period: 7/1/2018 - 6/30/2019
Wage Rate Per Hour: 78% of Journeyperson's rate
Supplemental Benefit Rate Per Hour: $14.25

Handler (Second 1000 Hours)

Effective Period: 7/1/2018 - 6/30/2019
Wage Rate Per Hour: 80% of Journeyperson's rate
Supplemental Benefit Rate Per Hour: $14.25

Handler (Third 1000 Hours)

Effective Period: 7/1/2018 - 6/30/2019
Wage Rate Per Hour: 83% of Journeyperson's rate
Supplemental Benefit Rate Per Hour: $14.25

Handler (Fourth 1000 Hours)

Effective Period: 7/1/2018 - 6/30/2019
Wage Rate Per Hour: 89% of Journeyperson's rate
Supplemental Benefit Rate Per Hour: $14.25

(Local #78)

HEAT & FROST INSULATOR
(Ratio of Apprentice to Journeyperson: 1 to 1, 1 to 3)

Heat & Frost Insulator (First Year)

Effective Period: 7/1/2018 - 6/30/2019
Wage and Supplemental Rate Per Hour: 40% of Journeyperson's rate

Heat & Frost Insulator (Second Year)

Effective Period: 7/1/2018 - 6/30/2019
Wage and Supplemental Rate Per Hour: 60% of Journeyperson's rate

Heat & Frost Insulator (Third Year)

Effective Period: 7/1/2018 - 6/30/2019
Wage and Supplemental Rate Per Hour: 70% of Journeyperson's rate

Heat & Frost Insulator (Fourth Year)

Effective Period: 7/1/2018 - 6/30/2019
Wage and Supplemental Rate Per Hour: 80% of Journeyperson's rate

(Local #12)

HOUSE WRECKER
(TOTAL DEMOLITION)
(Ratio of Apprentice to Journeyperson: 1 to 1, 1 to 3)

House Wrecker - First Year

Effective Period: 7/1/2018 - 6/30/2019
Wage Rate per Hour: $21.17
Supplemental Benefit Rate per Hour: $18.79

House Wrecker - Second Year

Effective Period: 7/1/2018 - 6/30/2019
Wage Rate per Hour: $22.32
Supplemental Benefit Rate per Hour: $18.79

House Wrecker - Third Year

Effective Period: 7/1/2018 - 6/30/2019
Wage Rate per Hour: $23.97
Supplemental Benefit Rate per Hour: $18.79

House Wrecker - Fourth Year

Effective Period: 7/1/2018 - 6/30/2019
Wage Rate per Hour: $26.53
Supplemental Benefit Rate per Hour: $18.79

(Mason Tenders District Council)

IRON WORKER - ORNAMENTAL
(Ratio of Apprentice to Journeyperson: 1 to 1, 1 to 4)

Iron Worker (Ornamental) - 1st Ten Months

Effective Period: 7/1/2018 - 6/30/2019
Wage Rate Per Hour: 50% of Journeyperson's rate
Supplemental Rate Per Hour: $40.20

Iron Worker (Ornamental) - 11 -16 Months

Effective Period: 7/1/2018 - 6/30/2019
Wage Rate Per Hour: 55% of Journeyperson's rate
Supplemental Rate Per Hour: $41.44

Iron Worker (Ornamental) - 17 - 22 Months

Effective Period: 7/1/2018 - 6/30/2019
Wage Rate Per Hour: 60% of Journeyperson's rate
Supplemental Rate Per Hour: $42.68

Iron Worker (Ornamental) - 23 - 28 Months

Effective Period: 7/1/2018 - 6/30/2019
Wage Rate Per Hour: 70% of Journeyperson's rate
Supplemental Rate Per Hour: $45.17

Iron Worker (Ornamental) - 29 - 36 Months

Effective Period: 7/1/2018 - 6/30/2019
Wage Rate Per Hour: 80% of Journeyperson's rate
Supplemental Rate Per Hour: $47.65

(Local #580)

IRON WORKER - STRUCTURAL
(Ratio of Apprentice to Journeyperson: 1 to 1, 1 to 6)

Iron Worker (Structural) - 1st Six Months

Effective Period: 7/1/2018 - 6/30/2019
Wage Rate per Hour: $26.27
Supplemental Benefit Rate per Hour: $51.18

Iron Worker (Structural) - 7- 18 Months

Effective Period: 7/1/2018 - 6/30/2019
Wage Rate per Hour: $26.87
Supplemental Benefit Rate per Hour: $51.18

Iron Worker (Structural) - 19 - 36 months

Effective Period: 7/1/2018 - 6/30/2019
Wage Rate per Hour: $27.47
Supplemental Benefit Rate per Hour: $51.18

(Local #40 and #361)

LABORER (FOUNDATION, CONCRETE, EXCAVATING, STREET PIPE LAYER & COMMON)

(Ratio Apprentice to Journeyperson: 1 to 1, 1 to 3)

Laborer (Foundation, Concrete, Excavating, Street Pipe Layer & Common) - First 1000 hours

Effective Period: 7/1/2018 - 6/30/2019
Wage Rate Per Hour: 50% of Journeyperson's rate
Supplemental Rate Per Hour: $42.63

Laborer (Foundation, Concrete, Excavating, Street Pipe Layer & Common) - Second 1000 hours

Effective Period: 7/1/2018 - 6/30/2019
Wage Rate Per Hour: 60% of Journeyperson's rate
Supplemental Rate Per Hour: $42.63

Laborer (Foundation, Concrete, Excavating, Street Pipe Layer & Common) - Third 1000 hours

Effective Period: 7/1/2018 - 6/30/2019

Wage Rate Per Hour: 75% of Journeyperson's rate
Supplemental Rate Per Hour: $42.63

Laborer (Foundation, Concrete, Excavating, Street Pipe Layer & Common) - Fourth 1000 hours

Effective Period: 7/1/2018 - 6/30/2019
Wage Rate Per Hour: 90% of Journeyperson's rate
Supplemental Rate Per Hour: $42.63

(Local #731)

MARBLE MECHANICS
(Ratio of Apprentice to Journeyperson: 1 to 1, 1 to 4)

Cutters & Setters - First 750 Hours

Effective Period: 7/1/2018 - 6/30/2019
Wage and Supplemental Rate Per Hour: 50% of Journeyperson's rate

NO BENEFITS PAID DURING THE FIRST TWO MONTHS (PROBATIONARY PERIOD)

Cutters & Setters - Second 750 Hours

Effective Period: 7/1/2018 - 6/30/2019
Wage and Supplemental Rate Per Hour: 55% of Journeyperson's rate

Cutters & Setters - Third 750 Hours

Effective Period: 7/1/2018 - 6/30/2019
Wage and Supplemental Rate Per Hour: 65% of Journeyperson's rate

Cutters & Setters - Fourth 750 Hours

Effective Period: 7/1/2018 - 6/30/2019
Wage and Supplemental Rate Per Hour: 75% of Journeyperson's rate

Cutters & Setters - Fifth 750 Hours

Effective Period: 7/1/2018 - 6/30/2019
Wage and Supplemental Rate Per Hour: 85% of Journeyperson's rate

Cutters & Setters - Sixth 750 Hours

Effective Period: 7/1/2018 - 6/30/2019
Wage and Supplemental Rate Per Hour: 95% of Journeyperson's rate

Polishers & Finishers - First 750 Hours

Effective Period: 7/1/2018 - 6/30/2019
Wage and Supplemental Rate Per Hour: 50% of Journeyperson's rate

NO BENEFITS PAID DURING THE FIRST TWO MONTHS (PROBATIONARY PERIOD)

Polishers & Finishers - Second 750 Hours

Effective Period: 7/1/2018 - 6/30/2019
Wage and Supplemental Rate Per Hour: 60% of Journeyperson's rate

Polishers & Finishers - Third 750 Hours

Effective Period: 7/1/2018 - 6/30/2019
Wage and Supplemental Rate Per Hour: 75% of Journeyperson's rate

Polishers & Finishers - Fourth 750 Hours

Effective Period: 7/1/2018 - 6/30/2019
Wage and Supplemental Rate Per Hour: 90% of Journeyperson's rate

(Local #7)

MASON TENDER
(Ratio of Apprentice to Journeyperson: 1 to 1, 1 to 3)

Mason Tender - First Year

Effective Period: 7/1/2018 - 6/30/2019
Wage Rate per Hour: $21.39
Supplemental Benefit Rate per Hour: $19.90

Mason Tender - Second Year

Effective Period: 7/1/2018 - 6/30/2019
Wage Rate per Hour: $22.54
Supplemental Benefit Rate per Hour: $19.90

Mason Tender - Third Year

Effective Period: 7/1/2018 - 6/30/2019
Wage Rate per Hour: $24.29
Supplemental Benefit Rate per Hour: $19.95

Mason Tender - Fourth Year

Effective Period: 7/1/2018 - 6/30/2019
Wage Rate per Hour: $26.95
Supplemental Benefit Rate per Hour: $19.95

(Local #79)

METALLIC LATHER
(Ratio of Apprentice to Journeyperson: 1 to 1, 1 to 3)

Metallic Lather (First Year)

Effective Period: 7/1/2018 - 6/30/2019
Wage Rate per Hour: $26.38
Supplemental Benefit Rate per Hour: $14.96

Metallic Lather (Second Year)

Effective Period: 7/1/2018 - 6/30/2019
Wage Rate per Hour: $30.38
Supplemental Benefit Rate per Hour: $16.96

Metallic Lather (Third Year)

Effective Period: 7/1/2018 - 6/30/2019
Wage Rate per Hour: $35.38
Supplemental Benefit Rate per Hour: $18.92

Metallic Lather (Fourth Year)

Effective Period: 7/1/2018 - 6/30/2019
Wage Rate per Hour: $37.38
Supplemental Benefit Rate per Hour: $19.92

(Local #46)

MILLWRIGHT
(Ratio of Apprentice to Journeyperson: 1 to 1, 1 to 4)

Millwright (First Year)

Effective Period: 7/1/2018 - 6/30/2019
Wage Rate per Hour: $28.33
Supplemental Benefit Rate per Hour: $34.28

Millwright (Second Year)

Effective Period: 7/1/2018 - 6/30/2019
Wage Rate per Hour: $33.48
Supplemental Benefit Rate per Hour: $37.88

Millwright (Third Year)

Effective Period: 7/1/2018 - 6/30/2019
Wage Rate per Hour: $38.63
Supplemental Benefit Rate per Hour: $42.13

Millwright (Fourth Year)

Effective Period: 7/1/2018 - 6/30/2019
Wage Rate per Hour: $48.93
Supplemental Benefit Rate per Hour: $48.69

(Local #740)

PAINTER
(Ratio of Apprentice to Journeyperson: 1 to 1, 1 to 3)

Painter - Brush & Roller - First Year

Effective Period: 7/1/2018 - 6/30/2019
Wage Rate per Hour: $17.00
Supplemental Benefit Rate per Hour: $14.46

Painter - Brush & Roller - Second Year

Effective Period: 7/1/2018 - 6/30/2019
Wage Rate per Hour: $21.25
Supplemental Benefit Rate per Hour: $18.63

Painter - Brush & Roller - Third Year

Effective Period: 7/1/2018 - 6/30/2019
Wage Rate per Hour: $25.50
Supplemental Benefit Rate per Hour: $21.86

Painter - Brush & Roller - Fourth Year

Effective Period: 7/1/2018 - 6/30/2019
Wage Rate per Hour: $34.00
Supplemental Benefit Rate per Hour: $27.88

(District Council of Painters)

PAINTER - METAL POLISHER
(Ratio of Apprentice to Journeyperson: 1 to 1, 1 to 3)

Metal Polisher (First Year)

Effective Period: 7/1/2018 - 6/30/2019
Wage Rate per Hour: $13.00
Supplemental Benefit Rate per Hour: $5.13

Metal Polisher (Second Year)

Effective Period: 7/1/2018 - 6/30/2019
Wage Rate per Hour: $13.00
Supplemental Benefit Rate per Hour: $5.13

Metal Polisher (Third Year)

Effective Period: 7/1/2018 - 6/30/2019
Wage Rate per Hour: $15.75
Supplemental Benefit Rate per Hour: $5.13

(Local 8A-28)

PAINTER - STRUCTURAL STEEL
(Ratio of Apprentice to Journeyperson: 1 to 1, 1 to 3)

Painters - Structural Steel (First Year)

Effective Period: 7/1/2018 - 6/30/2019
Wage and Supplemental Rate Per Hour: 40% of Journeyperson's rate

Painters - Structural Steel (Second Year)

Effective Period: 7/1/2018 - 6/30/2019
Wage and Supplemental Rate Per Hour: 60% of Journeyperson's rate

Painters - Structural Steel (Third Year)

Effective Period: 7/1/2018 - 6/30/2019
Wage and Supplemental Rate Per Hour: 80% of Journeyperson's rate

(Local #806)

PAVER AND ROADBUILDER
(Ratio of Apprentice to Journeyperson: 1 to 1, 1 to 3)

Paver and Roadbuilder - First Year (Minimum 1000 hours)

Effective Period: 7/1/2018 - 6/30/2019
Wage Rate per Hour: $28.36
Supplemental Benefit Rate per Hour: $20.30

Paver and Roadbuilder - Second Year (Minimum 1000 hours)

Effective Period: 7/1/2018 - 6/30/2019
Wage Rate per Hour: $30.00
Supplemental Benefit Rate per Hour: $20.30

(Local #1010)

PLASTERER
(Ratio of Apprentice to Journeyperson: 1 to 1, 1 to 3)

Plasterer - First Year: 1st Six Months

Effective Period: 7/1/2018 - 7/31/2018
Wage Rate Per Hour: 40% of Journeyperson's rate
Supplemental Rate Per Hour: $13.43

Effective Period: 8/1/2018 - 6/30/2019
Wage Rate Per Hour: 40% of Journeyperson's rate
Supplemental Rate Per Hour: $13.88

Plasterer - First Year: 2nd Six Months

Effective Period: 7/1/2018 - 7/31/2018
Wage Rate Per Hour: 45% of Journeyperson's rate
Supplemental Rate Per Hour: $13.91

Effective Period: 8/1/2018 - 6/30/2019
Wage Rate Per Hour: 45% of Journeyperson's rate
Supplemental Rate Per Hour: $14.36

Plasterer - Second Year: 1st Six Months

Effective Period: 7/1/2018 - 7/31/2018
Wage Rate Per Hour: 55% of Journeyperson's rate
Supplemental Rate Per Hour: $15.88

Effective Period: 8/1/2018 - 6/30/2019
Wage Rate Per Hour: 55% of Journeyperson's rate
Supplemental Rate Per Hour: $16.44

Plasterer - Second Year: 2nd Six Months

Effective Period: 7/1/2018 - 7/31/2018
Wage Rate Per Hour: 60% of Journeyperson's rate
Supplemental Rate Per Hour: $16.96

Effective Period: 8/1/2018 - 6/30/2019
Wage Rate Per Hour: 60% of Journeyperson's rate
Supplemental Rate Per Hour: $17.53

Plasterer - Third Year: 1st Six Months

Effective Period: 7/1/2018 - 7/31/2018
Wage Rate Per Hour: 70% of Journeyperson's rate
Supplemental Rate Per Hour: $19.13

Effective Period: 8/1/2018 - 6/30/2019
Wage Rate Per Hour: 70% of Journeyperson's rate
Supplemental Rate Per Hour: $19.72

Plasterer - Third Year: 2nd Six Months

Effective Period: 7/1/2018 - 7/31/2018
Wage Rate Per Hour: 75% of Journeyperson's rate
Supplemental Rate Per Hour: $20.21

Effective Period: 8/1/2018 - 6/30/2019
Wage Rate Per Hour: 75% of Journeyperson's rate
Supplemental Rate Per Hour: $20.81

(Local #530)

PLASTERER - TENDER
(Ratio of Apprentice to Journeyperson: 1 to 1, 1 to 3)

Plasterer Tender - First Year

Effective Period: 7/1/2018 - 6/30/2019
Wage Rate per Hour: $21.39
Supplemental Benefit Rate per Hour: $19.90

Plasterer Tender - Second Year

Effective Period: 7/1/2018 - 6/30/2019
Wage Rate per Hour: $22.54
Supplemental Benefit Rate per Hour: $19.90

Plasterer Tender - Third Year

Effective Period: 7/1/2018 - 6/30/2019
Wage Rate per Hour: $24.29
Supplemental Benefit Rate per Hour: $19.95

Plasterer Tender - Fourth Year

Effective Period: 7/1/2018 - 6/30/2019
Wage Rate per Hour: $26.95
Supplemental Benefit Rate per Hour: $19.95

(Local #79)

PLUMBER
(Ratio of Apprentice to Journeyperson: 1 to 1, 1 to 3)

Plumber - First Year: 1st Six Months

Effective Period: 7/1/2018 - 6/30/2019
Wage Rate per Hour: $16.28
Supplemental Benefit Rate per Hour: $5.43

Plumber - First Year: 2nd Six Months

Effective Period: 7/1/2018 - 6/30/2019
Wage Rate per Hour: $19.28
Supplemental Benefit Rate per Hour: $6.43

Plumber - Second Year

Effective Period: 7/1/2018 - 6/30/2019
Wage Rate per Hour: $26.93
Supplemental Benefit Rate per Hour: $18.10

Plumber - Third Year

Effective Period: 7/1/2018 - 6/30/2019
Wage Rate per Hour: $29.03
Supplemental Benefit Rate per Hour: $18.10

Plumber - Fourth Year

Effective Period: 7/1/2018 - 6/30/2019
Wage Rate per Hour: $31.88
Supplemental Benefit Rate per Hour: $18.10

Plumber - Fifth Year: 1st Six Months

Effective Period: 7/1/2018 - 6/30/2019
Wage Rate per Hour: $33.28
Supplemental Benefit Rate per Hour: $18.10

Plumber - Fifth Year: 2nd Six Months

Effective Period: 7/1/2018 - 6/30/2019
Wage Rate per Hour: $45.35
Supplemental Benefit Rate per Hour: $18.10

(Plumbers Local #1)

POINTER, WATERPROOFER, CAULKER, SANDBLASTER, STEAMBLASTER
(Exterior Building Renovation)
(Ratio of Apprentice to Journeyperson: 1 to 1, 1 to 4)

Pointer, Waterproofer, Caulker, Sandblaster, Steamblaster - First Year

Effective Period: 7/1/2018 - 6/30/2019
Wage Rate per Hour: $25.89
Supplemental Benefit Rate per Hour: $13.64

Pointer, Waterproofer, Caulker, Sandblaster, Steamblaster - Second Year

Effective Period: 7/1/2018 - 6/30/2019
Wage Rate per Hour: $28.97
Supplemental Benefit Rate per Hour: $18.15

Pointer, Waterproofer, Caulker, Sandblaster, Steamblaster - Third Year

Effective Period: 7/1/2018 - 6/30/2019
Wage Rate per Hour: $34.12
Supplemental Benefit Rate per Hour: $20.90

Pointer, Waterproofer, Caulker, Sandblaster, Steamblaster - Fourth Year

Effective Period: 7/1/2018 - 6/30/2019
Wage Rate per Hour: $41.33
Supplemental Benefit Rate per Hour: $21.60

(Bricklayer District Council)

ROOFER
(Ratio of Apprentice to Journeyperson: 1 to 1, 1 to 2)

Roofer - First Year

Effective Period: 7/1/2018 - 6/30/2019
Wage Rate Per Hour: 35% of Journeyperson's Rate
Supplemental Rate Per Hour: 20% of Journeyperson's Rate

Roofer - Second Year

Effective Period: 7/1/2018 - 6/30/2019
Wage and Supplemental Rate Per Hour: 50% of Journeyperson's Rate

Roofer - Third Year

Effective Period: 7/1/2018 - 6/30/2019
Wage and Supplemental Rate Per Hour: 60% of Journeyperson's Rate

Roofer - Fourth Year

Effective Period: 7/1/2018 - 6/30/2019
Wage and Supplemental Rate Per Hour: 75% of Journeyperson's Rate

(Local #8)

SHEET METAL WORKER
(Ratio of Apprentice to Journeyperson: 1 to 1, 1 to 3)

Sheet Metal Worker (0-6 Months)

Effective Period: 7/1/2018 - 6/30/2019
Wage Rate Per Hour: 25% of Journeyperson's rate
Supplemental Rate Per Hour: $6.45

Sheet Metal Worker (7-18 Months)

Effective Period: 7/1/2018 - 6/30/2019
Wage Rate Per Hour: 35% of Journeyperson's rate
Supplemental Rate Per Hour: $18.07

Sheet Metal Worker (19-30 Months)

Effective Period: 7/1/2018 - 6/30/2019
Wage Rate Per Hour: 45% of Journeyperson's rate
Supplemental Rate Per Hour: $24.76

Sheet Metal Worker (31-36 Months)

Effective Period: 7/1/2018 - 6/30/2019
Wage Rate Per Hour: 55% of Journeyperson's rate
Supplemental Rate Per Hour: $29.17

Sheet Metal Worker (37-42 Months)

Effective Period: 7/1/2018 - 6/30/2019
Wage Rate Per Hour: 55% of Journeyperson's rate
Supplemental Rate Per Hour: $29.17

Sheet Metal Worker (43-48 Months)

Effective Period: 7/1/2018 - 6/30/2019
Wage Rate Per Hour: 70% of Journeyperson's rate
Supplemental Rate Per Hour: $35.85

Sheet Metal Worker (49-54 Months)

Effective Period: 7/1/2018 - 6/30/2019
Wage Rate Per Hour: 70% of Journeyperson's rate
Supplemental Rate Per Hour: $35.85

Sheet Metal Worker (55-60 Months)

Effective Period: 7/1/2018 - 6/30/2019
Wage Rate Per Hour: 80% of Journeyperson's rate
Supplemental Rate Per Hour: $40.30

(Local #28)

SIGN ERECTOR
(Ratio of Apprentice to Journeyperson: 1 to 1, 1 to 4)

Sign Erector - First Year: 1st Six Months

Effective Period: 7/1/2018 - 6/30/2019
Wage Rate Per Hour: 35% of Journeyperson's rate
Supplemental Rate Per Hour: $15.28

Sign Erector - First Year: 2nd Six Months

Effective Period: 7/1/2018 - 6/30/2019
Wage Rate Per Hour: 40% of Journeyperson's rate
Supplemental Rate Per Hour: $17.33

Sign Erector - Second Year: 1st Six Months

Effective Period: 7/1/2018 - 6/30/2019
Wage Rate Per Hour: 45% of Journeyperson's rate
Supplemental Rate Per Hour: $19.38

Sign Erector - Second Year: 2nd Six Months

Effective Period: 7/1/2018 - 6/30/2019
Wage Rate Per Hour: 50% of Journeyperson's rate
Supplemental Rate Per Hour: $21.45

Sign Erector - Third Year: 1st Six Months

Effective Period: 7/1/2018 - 6/30/2019
Wage Rate Per Hour: 55% of Journeyperson's rate
Supplemental Rate Per Hour: $28.98

Sign Erector - Third Year: 2nd Six Months

Effective Period: 7/1/2018 - 6/30/2019
Wage Rate Per Hour: 60% of Journeyperson's rate
Supplemental Rate Per Hour: $31.53

Sign Erector - Fourth Year: 1st Six Months

Effective Period: 7/1/2018 - 6/30/2019
Wage Rate Per Hour: 65% of Journeyperson's rate
Supplemental Rate Per Hour: $34.80

Sign Erector - Fourth Year: 2nd Six Months

Effective Period: 7/1/2018 - 6/30/2019
Wage Rate Per Hour: 70% of Journeyperson's rate
Supplemental Rate Per Hour: $37.43

Sign Erector - Fifth Year

Effective Period: 7/1/2018 - 6/30/2019
Wage Rate Per Hour: 75% of Journeyperson's rate
Supplemental Rate Per Hour: $40.03

Sign Erector - Sixth Year

Effective Period: 7/1/2018 - 6/30/2019

Wage Rate Per Hour: 80% of Journeyperson's rate
Supplemental Rate Per Hour: $42.63

(Local #137)

STEAMFITTER
(Ratio of Apprentice to Journeyperson: 1 to 1, 1 to 3)

Steamfitter - First Year

Effective Period: 7/1/2018 - 6/30/2019
Wage Rate and Supplemental Per Hour: 40% of Journeyperson's rate

Steamfitter - Second Year

Effective Period: 7/1/2018 - 6/30/2019
Wage Rate and Supplemental Rate Per Hour: 50% of Journeyperson's rate.

Steamfitter - Third Year

Effective Period: 7/1/2018 - 6/30/2019
Wage Rate and Supplemental Rate per Hour: 65% of Journeyperson's rate.

Steamfitter - Fourth Year

Effective Period: 7/1/2018 - 6/30/2019
Wage Rate and Supplemental Rate Per Hour: 80% of Journeyperson's rate.

Steamfitter - Fifth Year

Effective Period: 7/1/2018 - 6/30/2019
Wage Rate and Supplemental Rate Per Hour: 85% of Journeyperson's rate.

(Local #638)

STONE MASON - SETTER
(Ratio Apprentice of Journeyperson: 1 to 1, 1 to 2)

Stone Mason - Setters - First 750 Hours

Effective Period: 7/1/2018 - 6/30/2019
Wage and Supplemental Rate Per Hour: 50% of Journeyperson's rate

Stone Mason - Setters - Second 750 Hours

Effective Period: 7/1/2018 - 6/30/2019
Wage Rate Per Hour: 60% of Journeyperson's rate
Supplemental Rate Per Hour: 50% of Journeyperson's rate

Stone Mason - Setters - Third 750 Hours

Effective Period: 7/1/2018 - 6/30/2019
Wage Rate Per Hour: 70% of Journeyperson's rate
Supplemental Rate Per Hour: 50% of Journeyperson's rate

Stone Mason - Setters - Fourth 750 Hours

Effective Period: 7/1/2018 - 6/30/2019
Wage Rate Per Hour: 80% of Journeyperson's rate
Supplemental Rate Per Hour: 50% of Journeyperson's rate

Stone Mason - Setters - Fifth 750 Hours

Effective Period: 7/1/2018 - 6/30/2019
Wage Rate Per Hour: 90% of Journeyperson's rate
Supplemental Rate Per Hour: 50% of Journeyperson's rate

Stone Mason - Setters - Sixth 750 Hours

Effective Period: 7/1/2018 - 6/30/2019
Wage Rate Per Hour: 100% of Journeyperson's rate
Supplemental Rate Per Hour: 50% of Journeyperson's rate

(Bricklayers District Council)

TAPER
(Ratio of Apprentice to Journeyperson: 1 to 1, 1 to 4)

Drywall Taper - First Year

Effective Period: 7/1/2018 - 6/30/2019
Wage and Supplemental Rate Per Hour: 40% of Journeyperson's rate

Drywall Taper - Second Year

Effective Period: 7/1/2018 - 6/30/2019
Wage and Supplemental Rate Per Hour: 60% of Journeyperson's rate

Drywall Taper - Third Year

Effective Period: 7/1/2018 - 6/30/2019
Wage and Supplemental Rate Per Hour: 80% of Journeyperson's rate

(Local #1974)

TILE LAYER - SETTER
(Ratio of Apprentice to Journeyperson: 1 to 1, 1 to 4)

Tile Layer - Setter - First 750 Hours

Effective Period: 7/1/2018 - 6/30/2019
Wage and Supplemental Rate Per Hour: 50% of Journeyperson's rate

Tile Layer - Setter - Second 750 Hours

Effective Period: 7/1/2018 - 6/30/2019
Wage and Supplemental Rate Per Hour: 55% of Journeyperson's rate

Tile Layer - Setter - Third 750 Hours

Effective Period: 7/1/2018 - 6/30/2019
Wage and Supplemental Rate Per Hour: 65% of Journeyperson's rate

Tile Layer - Setter - Fourth 750 Hours

Effective Period: 7/1/2018 - 6/30/2019
Wage and Supplemental Rate Per Hour: 75% of Journeyperson's rate

Tile Layer - Setter - Fifth 750 Hours

Effective Period: 7/1/2018 - 6/30/2019
Wage and Supplemental Rate Per Hour: 85% of Journeyperson's rate

Tile Layer - Setter - Sixth 750 Hours

Effective Period: 7/1/2018 - 6/30/2019
Wage and Supplemental Rate Per Hour: 95% of Journeyperson's rate

(Local #7)

TIMBERPERSON
(Ratio of Apprentice to Journeyperson: 1 to 1, 1 to 6)

Timberperson - First Year

Effective Period: 7/1/2018 - 6/30/2019
Wage Rate Per Hour: 40% of Journeyperson's rate
Supplemental Rate Per Hour: $33.19

Timberperson - Second Year

Effective Period: 7/1/2018 - 6/30/2019
Wage Rate Per Hour: 50% of Journeyperson's rate
Supplemental Rate Per Hour: $33.19

Timberperson - Third Year

Effective Period: 7/1/2018 - 6/30/2019
Wage Rate Per Hour: 65% of Journeyperson's rate
Supplemental Rate Per Hour: $33.19

Timberperson - Fourth Year

Effective Period: 7/1/2018 - 6/30/2019
Wage Rate Per Hour: 80% of Journeyperson's rate
Supplemental Rate Per Hour: $33.19

(Local #1536)

THE CITY OF NEW YORK
OFFICE OF THE COMPTROLLER
1 CENTRE STREET ROOM 1120
NEW YORK, N.Y. 10007-2341

TELEPHONE: (212) 669-3622
FAX NUMBER: (212) 669-8495

Leonard A. Mancusi
SENIOR ASSISTANT COMPTROLLER

ALAN G. HEVESI
COMPTROLLER

MEMORANDUM

November 6, 2000

To *Agency Chief Contracting Officers*

From: *Leonard A. Mancusi*

Re: *Security at Construction Sites*

Prior to the enactment of Administrative Code §6-109, security guards on construction sites were not subject to prevailing wages. Security guards under the New York State labor law are covered under §230 which provides that prevailing wages are to be paid for security guards in existing buildings. §6-109 of the Administrative Code which was enacted in 1996 closed this loophole by including all security guards working pursuant to a city contract as a prevailing wage trade.

Although some construction contract boilerplate language has been amended to include §6-109, sub-contractors performing security services have advised us that they were not aware of this provision and, since traditionally, security guards were not a covered trade on construction sites, and they were not advised by a prime contractor that they would have to pay prevailing wages, they have not been doing so.

To avoid the possibility of issuing stop payments against prime contractors for the failure of their security service sub-contractors to pay

prevailing wages, we suggest that you write to all your existing security guard sub-contractors and their primes and in the future, upon approval of a security guard sub-contractor, advise the contractors of their obligation to pay prevailing wages under §6-109 of the Administrative Code.

As always, your cooperation is appreciated.

LAM:er
ACCO.SECURITY AT SITES

Department of Design and Construction

INFRASTRUCTURE DIVISION
BUREAU OF DESIGN

VOLUME 2 OF 3

_____
Contractor

_____

Dated_____, 20___

_____

APPROVED AS TO FORM
CERTIFIED AS TO LEGAL AUTHORITY

_____
Acting Corporation Counsel

_____

Dated_____, 20___

_____

Department of Design and Construction

INFRASTRUCTURE DIVISION
BUREAU OF DESIGN

VOLUME 2 OF 3

PROJECT ID: GCJA03-2B

CONSTRUCTION OF RIGHT-OF-WAY
GREEN INFRASTRUCTURE IN THE CSO TRIBUTARY AREA
JAM-003 AND JAM-003A

Together With All Work Incidental Thereto

BOROUGH OF QUEENS
CITY OF NEW YORK

PCI Industries Corp.

Contractor

WP 1/17/19

Dated June 19th, 2019

APPROVED AS TO FORM
CERTIFIED AS TO LEGAL AUTHORITY

Acting Corporation Counsel

Dated January 17, 2019

Department of Design and Construction

THE CITY OF NEW YORK
DEPARTMENT OF DESIGN AND CONSTRUCTION
DIVISION OF INFRASTRUCTURE

30-30 THOMSON AVENUE
LONG ISLAND CITY, NEW YORK 11101-3045
TELEPHONE (718) 391-1000
WEBSITE www1.nyc.gov/site/ddc/index.page

VOLUME 3 OF 3

SCHEDULE A
SPECIFICATIONS AND
REVISIONS TO STANDARD SPECIFICATIONS

FOR FURNISHING ALL LABOR AND MATERIALS NECESSARY AND REQUIRED FOR:

PROJECT ID: GCJA03-2B

CONSTRUCTION OF RIGHT-OF-WAY GREEN INFRASTRUCTURE IN THE CSO TRIBUTARY AREA JAM-003 AND JAM-003A

Together With All Work Incidental Thereto

BOROUGH OF QUEENS
CITY OF NEW YORK

FOR THE DEPARTMENT OF ENVIRONMENTAL PROTECTION
PREPARED BY

NV5

DECEMBER 17, 2018

19-039

VOLUME 3 OF 3

TABLE OF CONTENTS

SECTION	DESCRIPTION	PAGES
SPECIFICATIONS	AND STANDARDS OF NEW YORK CITY	1 OF 2 AND 2 OF 2
SCHEDULE A	GENERAL CONDITIONS TO CONSTRUCTION CONTRACT	SA-1 TO SA-14
R - PAGES	REVISIONS TO STANDARD SPECIFICATIONS	R-1 TO R-2
GI- PAGES	STANDARD GREEN INFRASTRUCTRE SPECIFICATIONS	GI-1 TO GI-140
S- PAGES	SPECIAL PROVISIONS	S-1 TO S-50
EP7 – PAGES	GAS COST SHARING STANDARD SPECIFICATIONS	EP7-1 TO EP7-29
U – PAGES	UTILITY PAGES	U-1 TO U-16

(NO TEXT ON THIS PAGE)

SPECIFICATIONS AND STANDARDS OF NEW YORK CITY

The following New York City Department of Transportation (NYCDOT) reference documents are available online at: http://www1.nyc.gov/site/ddc/resources/publications.page or for purchase between 9:00 A.M. and 3:00 P.M., Bid Window, at 55 Water St., Ground Floor, NYC, N.Y. 10041. Tel. (212) 839-9435.

1. NYCDOT Standard Highway Specifications, August 1, 2015
2. NYCDOT Standard Highway Details of Construction, July 1, 2010
3. NYCDOT Division of Street Lighting Specifications
4. NYCDOT Division of Street Lighting Standard Drawings
5. NYCDOT Standard Specifications for Traffic Signals
6. NYCDOT Standard Drawings for Traffic Signals

The following reference documents for New York City Department of Environmental Protection (NYCDEP) are available online at: http://www1.nyc.gov/site/ddc/resources/publications.page or for pick up between 8:00 A.M. and 4:00 P.M. at 30-30 Thomson Avenue, 3rd Floor, Division of Infrastructure, Long Island City, N.Y. 11101.
Contact: Mr. Nader Soliman, Tel. (718) 391-1179

1. NYCDEP Standard Sewer and Water Main Specifications, July 1, 2014
2. NYCDEP Instructions for Concrete Specifications, Jan. 92
3. NYCDEP General Specification 11-Concrete, November 1991
4. NYCDEP Sewer Design Standards, (September 2007) Revised August 2018

The following reference documents for New York City Department of Environmental Protection (NYCDEP) are available online at: http://www1.nyc.gov/site/ddc/resources/publications.page or for pick up between 8:00 A.M. and 4:00 P.M. at 30-30 Thomson Avenue, 3rd Floor, Division of Infrastructure, Long Island City, N.Y. 11101.
Contact: Mr. Robert Kuhlmann, Tel. (718) 391-2145

1. NYCDEP Water Main Standard Drawings, November 2010
2. Specifications for Trunk Main Work, July 2014
3. Standard Design and Guidelines for Green Infrastructure Practices, latest version, available only online at: http://www.nyc.gov/html/dep/html/stormwater/green_infrastructure_standards.shtml

Water main work material specifications are available at the Department of Environmental Protection, 59-17 Junction Boulevard, 3rd Floor Low-Rise Building, Flushing, N.Y. 11373-5108.
Contact: Mr. Tarlock Sahansra, P.E., Tel. (718) 595-5302
E-mail: TSAHANSRA@DEP.NYC.GOV

Standard Specifications and Drawings for New York City Fire Department Communications facilities of New York City are available online at https://www1.nyc.gov/assets/fdny/downloads/pdf/about/fdny-plant-operations-standard-drawings-specifications.pdf or for pick up from the FDNY Facilities Management Bureau, Plant Operations Engineering, 316 Sgt. Beers Avenue Cluster 1 Box 16, Fort Totten, N.Y. 11359.
Contact: Mr. Ed Durkin, Tel. (718) 281-3933

Tree Planting Standards of the City of New York Parks & Recreation are available at the following Department of Parks & Recreation website:
http://www.nycgovparks.org/pagefiles/53/Tree-Planting-Standards.pdf

SPECIFICATIONS AND STANDARDS OF PRIVATE UTILITIES

The Following reference document for Private Utility Work is available for pick up between 8:30 A.M. and 4:00 P.M. at 30-30 Thomson Avenue, First Floor Bid Procurement Room, L.I.C., N.Y. 11101.

1. CET SPECIFICATIONS AND SKETCHES dated November 2010.

SCHEDULE A

(GENERAL CONDITIONS TO CONSTRUCTION CONTRACT (INCLUDING GENERAL CONDITIONS RELATED TO ARTICLE 22 – INSURANCE)

PART I. REQUIRED INFORMATION

INFORMATION FOR BIDDERS SECTION 26 BID SECURITY The **Contractor** shall obtain a bid security in the amount indicated to the right.	Required provided the TOTAL BID PRICE set forth on the Bid Form is $1,000,000. or more. Certified Check: 2% of Bid Amount or Bond: 10% of Bid Amount
INFORMATION FOR BIDDERS SECTION 26 PERFORMANCE AND PAYMENT BONDS The **Contractor** shall obtain performance and payment bonds in the amount indicated to the right.	Required for contracts in the amount of $1,000,000 or more. Performance Security and Payment Security shall each be in an amount equal to 50% of the Contract Price.
INFORMATION FOR BIDDERS DEPARTMENT OF DESIGN AND CONSTRUCTION SAFETY REQUIREMENTS The **Contractor** shall provide the safety personnel as indicated to the right.	■ Project Safety Representative ☐ Dedicated, full-time Project Safety Manager
CONTRACT ARTICLE 14 DATE FOR SUBSTANTIAL COMPLETION The **Contractor** shall substantially complete the **Work** in the number of calendar days indicated to the right.	See Page SA-5
CONTRACT ARTICLE 15 LIQUIDATED DAMAGES If the **Contractor** fails to substantially complete the **Work** within the time fixed for substantial completion plus authorized time extensions or if the **Contractor**, in the sole determination of the **Commissioner**, has abandoned the **Work**, the **Contractor** shall pay to the **City** the amount indicated to the right.	For Each Consecutive Calendar Day Over Completion Time Specified on Each Issued Work Order: $2,500.00
CONTRACT ARTICLE 17. SUB-CONTRACTOR The **Contractor** shall not make subcontracts totaling an amount more than the percentage of the total **Contract** price indicated to the right.	Not to exceed 35 % of the **Contract** price

CONTRACT ARTICLE 21. RETAINAGE The **Commissioner** shall deduct and retain until the substantial completion of the **Work** the percent value of the **Work** indicated to the right.	10 % of the value of the **Work**
CONTRACT ARTICLE 22. (Per Directions Below)	See pages SA-6 through SA-13
CONTRACT ARTICLE 24. DEPOSIT GUARANTEE As security for the faithful performance of its obligations, the **Contractor**, upon filing its requisition for payment on **Substantial Completion**, shall deposit with the **Commissioner** a sum equal to the percentage of the **Contract** price indicated to the right.	5% of **Contract** price
CONTRACT ARTICLE 24. PERIOD OF GUARANTEE Periods of maintenance and guarantee other than the period set forth in Article 24.1 are indicated to the right.	Twelve (12) Months, including Trees
CONTRACT ARTICLE 74. STATEMENT OF WORK The **Contractor** shall furnish all labor and materials and perform all **Work** in strict accordance with the **Contract Drawings**, **Specifications,** and all **Addenda** thereto, as **shown in the column to the right.**	**Addenda**, numbered: 1
CONTRACT ARTICLE 75. COMPENSATION TO BE PAID TO CONTRACTOR The **City** shall pay and the **Contractor** shall accept in full consideration for the performance of the **Contract**, subject to additions and deductions as provided herein, the total sum **shown in the column to the right,** being the amount at which the **Contract** was awarded to the **Contractor** at a public letting thereof, based upon the **Contractor's** bid for the **Contract.**	Amount for which the **Contract** was Awarded: Nineteen Million, One Hundred Twenty-Three Thousand, Three Hundred Seventy Dollars ($ 19,123,370.00)
CONTRACT ARTICLE 79. PARTICIPATION BY MINORITY-OWNED AND WOMEN-OWNED BUSINESS ENTERPRISES IN CITY PROCUREMENT	See M/WBE Utilization Plan in the Bid Booklet

STANDARD HIGHWAY SPECIFICATIONS SECTION 6.40 LIQUIDATED DAMAGES FOR ENGINEER'S FIELD OFFICE If the Contractor fails to satisfactorily provide the field office and all equipment specified in **Section 6.40 - Engineer's Field Office**, and/or if a cited deficiency exceed seventy two (72) hours after notice from the Engineer in writing, or is permitted to recur, liquidated damages will be assessed in the amount specified herein for each subsequent calendar day or part thereof that a cited deficiency resulting in nonpayment, as described in **Section 6.40.5**, is not corrected.	$ 500.00 for each calendar day of deficiency
SPECIAL SPECIFICATIONS SECTION GI-6.70 LIQUIDATED DAMAGES FOR MAINTENANCE AND PROTECTION OF TRAFFIC	$ 250.00 for each instance of failure to comply with the Maintenance and Protection of Traffic requirements within three (3) hours after written notice from the Engineer. $ 500.00 for each and every hour of failing to open the entire width of roadway to traffic the morning following a night/weekend work operation.
SPECIAL SPECIFICATIONS SECTION GI-7.13E LIQUIDATED DAMAGES FOR MAINTENANCE OF GI SITE If the Contractor fails to comply, within three (3) consecutive hours after written notice from the Engineer, with the requirements of **Section GI-7.13E - Maintenance of GI Site**, the Contractor shall pay to the City of New York, until such notice has been complied with or rescinded, the sum specified above per calendar day, for each instance of such failure, as liquidated damages and not as a penalty, for such default.	$ 500.00 for each calendar day, for each occurrence

SECTIONS 4.16 AND 4.17 LIQUIDATED DAMAGES FOR TREES, SHRUBS, WOODY AND HERBACEIOUS PLANT MATERIAL	
Failure to replace trees, shrubs, perennials or grasses in the next appropriate planting season, as per **SECTIONS 4.16 AND 4.17 - TREES, SHRUBS, WOODY AND HERBACEIOUS PLANT MATERIAL** will result in the assessment of liquidated damages and not as a penalty for such default.	a. $ 200.00 per tree. b. $ 80.00 per shrub. c. $ 20.00 per perennial or grass.

Date for Substantial Completion (Reference: Article 14)

The Contractor shall substantially complete the Work within the Final Contract Duration determined in accordance with the terms and conditions set forth herein.

The Base Contract Duration for this project is 545 consecutive calendar days ("ccds").

The Final Contract Duration shall be the Base Contract Duration when a check mark is indicated before the word "NO", below, and shall be the Base Contract Duration adjusted by the table set forth below when a check mark is indicated before the word "YES", below.

√ YES _____ NO

When the Final Contract Duration is indicated above to be adjusted by the table below, the table may increase the Base Contract Duration depending on the date of scheduled substantial completion to avoid a scheduled substantial completion of the Work during the winter months. The date of scheduled substantial completion shall be determined by adding the Base Contract Duration to the date specified to commence work in the written Notice to Proceed. The Final Contract Duration shall then be determined as follows:

(a) Find the row that corresponds to the month of substantial completion based on the Base Contract Duration added to the date specified to commence work in the written Notice to Proceed.

(b) Find the number of days to be added to the Base Contract Duration in the table below. Add that number of days to the Base Contract Duration to obtain the Final Contract Duration in consecutive calendar days.

Month of Substantial Completion based on the Base Contract Duration	Number of Days of adjustment
January	150
February	120
March	90
April	60
May	30
June	0
July	0
August	0
September	0
October	0
November –December 15	0
December 16 – December 31	180

In addition, should Item No. 9.30, "Storm Water Pollution Prevention," exist in the Contract and the required Storm Water Pollution Prevention Plan (SWPPP) does not conform to NYSDEC's recommended Standards, an additional 60 ccd shall be added to the above Final Contract Duration.

(GENERAL CONDITIONS RELATING TO ARTICLE 22 – INSURANCE)

PART II. TYPES OF INSURANCE, MINIMUM LIMITS AND SPECIAL CONDITIONS

Note: All certificate(s) of insurance submitted pursuant to Contract Article 22.3. 3 must be accompanied by a Certification by Broker consistent with Part III below and include the following information:

- **For each insurance policy, the name and NAIC number of issuing company, number of policy, and effective dates;**
- **Policy limits consistent with the requirements listed below;**
- **Additional insureds or loss payees consistent with the requirements listed below; and**
- **The number assigned to the Contract by the City (in the "Description of Operations" field).**

Insurance indicated by a blackened box (■) or by X in a □ to left will be required under this contract

Types of Insurance (per Article 22 in its entirety, including listed paragraph)	Minimum Limits and Special Conditions
■ Commercial General Liability Art. 22.1.1	The minimum limits shall be $ 3,000,000 per occurrence and $ 6,000,000 per project aggregate applicable to this **Contract.** Additional Insureds: 1. City of New York, including its officials and employees, with coverage at least as broad as ISO Form CG 20 10 and CG 20 37, 2. All person(s) or organization(s), if any, that Article 22.1.1(b) of the **Contract** requires to be named as Additional Insured(s), with coverage at least as broad as ISO Form CG 20 26. The Additional Insured endorsement shall either specify the entity's name, if known, or the entity's title (e.g., Project Manager), 3. National Grid

■ Workers' Compensation Art. 22.1.2 ■ Disability Benefits Insurance Art. 22.1.2 ■ Employers' Liability Art. 22.1.2 ☐ Jones Act Art. 22.1.3 ☐ U.S. Longshoremen's and Harbor Workers Compensation Act Art. 22.1.3	Workers' Compensation, Employers' Liability, and Disability Benefits Insurance: Statutory per New York State law without regard to jurisdiction. **Note:** The following forms are acceptable: (1) New York State Workers' Compensation Board Form No. C-105.2, (2) State Insurance Fund Form No. U-26.3, (3) New York State Workers' Compensation Board Form No. DB-120.1 and (4) Request for WC/DB Exemption Form No. CE-200. The City will not accept an ACORD form as proof of Workers' Compensation or Disability Insurance. Jones Act and U.S. Longshoremen's and Harbor Workers' Compensation Act: Statutory per U.S. Law. ☐ Additional Requirements: (1) NYCTA "OUTSIDE CONTRACT" INSURANCE REQUIREMENTS: Workers' Compensation Insurance (including Employer's Liability Insurance) with limits of not less than $2,000,000, which limit may be met by a combination of primary and excess insurance meeting the statutory limits of New York State. (2) Two (2) certificates of such insurance shall be furnished to the Director, Risk Management, MTA Risk and Insurance Management Standards, Enforcement and Claims Unit, 2 Broadway, 21st Floor, New York, NY 10004.
☐ Builders' Risk Art. 22.1.4	☐ Required: 100% of total bid amount ☐ Required: 100 % of total bid amount for Item(s): **Contractor** the Named Insured; the **City** both an Additional Insured and one of the loss payees as its interests may appear. If the **Work** does not involve construction of a new building or gut renovation work, the **Contractor** may provide an installation floater in lieu of Builders Risk insurance. Note: Builders Risk Insurance may terminate upon **Substantial Completion** of the **Work** in its entirety.

■ Commercial Auto Liability Art. 22.1.5	$ 2,000,000 per accident combined single limit If vehicles are used for transporting hazardous materials, the **Contractor** shall provide pollution liability broadened coverage for covered vehicles (endorsement CA 99 48) as well as proof of MCS 90 Additional Insureds: (1) City of New York, including its officials and employees, and
☐Contractors Pollution Liability Art. 22.1.6	$ 5,000,000 per occurrence $ 5,000,000 aggregate Additional Insureds: 1. City of New York, including its officials and employees, and 2. _____ 3. _____
☐ Marine Protection and Indemnity Art. 22.1.7(a)	$_____ each occurrence $_____ aggregate Additional Insureds: 1. City of New York, including its officials and employees, and 2. _____ 3. _____
☐ Hull and Machinery Insurance Art. 22.1.7(b)	$_____ per occurrence $_____ aggregate Additional Insureds: 1. City of New York, including its officials and employees, and 2. _____ 3. _____

☐ Marine Pollution Liability Art. 22.1.7(c)	$ 1,000,000 per occurrence $ 1,000,000 aggregate Additional Insureds: 1. City of New York, including its officials and employees, and 2. _____ 3. _____
[OTHER] Art. 22.1.8 ☐ Railroad Protection Liability Policy (ISO-RIMA or equivalent form) approved by Permittor covering the work to be performed at the designated site and affording protection for damages arising out of bodily injury or death, physical damage to or destruction of property, including damage to the Insured's own property and conforming to the following: • Policy Endorsement CG 28 31 - Pollution Exclusion Amendment is required to be endorsed onto the policy when environmental-related work and/or exposures exist. • Indicate the Name and address of the Contractor to perform the work, the Contract # and the name of the railroad property where the work is being performed and the Agency Permit. • Evidence of Railroad Protective Liability Insurance, must be provided in the form of the Original Policy. A detailed Insurance Binder (ACORD or Manuscript Form) will be accepted pending issuance of the Original Policy, which must be provided within 30 days of the Binder Approval.	$ 2,000,000 per occurrence $ 6,000,000 annual aggregate Named Insureds: 1. New York City Transit Authority (NYCTA), the Manhattan and Bronx Surface Transit Operation Authority (MaBSTOA), the Staten Island Rapid Transit Operation Authority (SIRTOA), MTA Capital Construction Co., the Metropolitan Transportation Authority (MTA) including its subsidiaries and affiliates, and the City of New York (as Owner) and all other indemnified parties.

[OTHER] Art. 22.1.8

☐ Professional Liability

A. The Contractor's Professional Engineer shall maintain and submit evidence of Professional Liability Insurance in the minimum amount of $1,000,000 per claim. The policy or policies shall include an endorsement to cover the liability assumed by the Contractor under this Contract arising out of the negligent performance of professional services or caused by an error, omission or negligent act of the Contractor's Professional Engineer or anyone employed by the Contractor's Professional Engineer.

B. Claims-made policies will be accepted for Professional Liability Insurance. All such policies shall have an extended reporting period option or automatic coverage of not less than two (2) years. If available as an option, the Contractor's Professional Engineer shall purchase extended reporting period coverage effective on cancellation or termination of such insurance unless a new policy is secured with a retroactive date, including at least the last policy year.

[OTHER] Art. 22.1.8 ■ Engineer's Field Office **Section 6.40, Standard Highway Specifications**	Fire insurance, extended coverage and vandalism, malicious mischief and burglary, and theft insurance coverage in the amount of $40,000

[OTHER] Art. 22.1.8

☐ The Following Additional Insurance Must Be Provided:

Umbrella/Excess Liability Insurance - The Contractor shall provide Umbrella/Excess Liability Insurance in the minimum amount of $10,000,000 per Occurrence and $10,000,000 in Aggregate. The policy terms and condition should be at least as broad as the underlying policies. The underlying policies should comply with the insurance provision as outlined by the contract. Defense cost should be in addition to the limit of liability. The City of New York, including its officials and employees, should be included as additional insured as respects to the noted project.

Per **Article 22.2.5** of the **Standard Construction Contract:** The Contractor may satisfy its insurance obligations as defined in this Schedule A through primary policies or a combination of primary and excess/umbrella policies, so long as all policies provide the scope of coverage required herein.

SCHEDULE A
(GENERAL CONDITIONS TO CONSTRUCTION CONTRACT)
(GENERAL CONDITIONS RELATING TO ARTICLE 22 – INSURANCE)

PART III. CERTIFICATES OF INSURANCE

All certificates of insurance (except certificates of insurance solely evidencing Workers' Compensation Insurance, Employer's Liability Insurance, and/or Disability Benefits Insurance) must be accompanied by one of the following:

(1) the Certification by Insurance Broker or Agent on the following page setting forth the required information and signatures;

-- OR --

(2) copies of all policies as certified by an authorized representative of the issuing insurance carrier that are referenced in such certificate of insurance. If any policy is not available at the time of submission, certified binders may be submitted until such time as the policy is available, at which time a certified copy of the policy shall be submitted.

CITY OF NEW YORK

CERTIFICATION BY INSURANCE BROKER OR AGENT

The undersigned insurance broker represents to the City of New York that the attached Certificate of Insurance is accurate in all material respects.

_____
[Name of broker or agent (typewritten)]

_____
[Address of broker or agent (typewritten)]

_____
[Email address of broker or agent (typewritten)]

_____
[Phone number/Fax number of broker or agent (typewritten)]

_____
[Signature of authorized official, broker, or agent]

_____
[Name and title of authorized official, broker, or agent (typewritten)]

State of .....)
) ss.:
County of .....)

Sworn to before me this _____ day of _____, 20____

_____
NOTARY PUBLIC FOR THE STATE OF _____

SCHEDULE A

(GENERAL CONDITIONS TO CONSTRUCTION CONTRACT)

PART IV. ADDRESS OF COMMISSIONER

Wherever reference is made in Article 7 or Article 22 to documents to be sent to the **Commissioner** (e.g., notices, filings, or submissions), such documents shall be sent to the address set forth below or, in the absence of such address, to the **Commissioner's** address as provided elsewhere in this **Contract**.

DDC Director, Insurance Risk Manager

30 – 30 Thomson Avenue, 4th Floor (IDCNY Building)

Long Island City, NY 11101

(NO FURTHER TEXT ON THIS PAGE)

(NO TEXT ON THIS PAGE)

R - PAGES

REVISIONS TO STANDARD SPECIFICATIONS

NOTICE

The Specification Bulletin(s) ("SB(s)") referenced in this Section (R-Pages) may consist of revisions to the following Standard Specifications:

- New York City Department of Transportation ("NYC DOT") Standard Highway Specifications, dated 8/1/2015;
- New York City Department of Environmental Protection ("NYC DEP") Standard Sewer and Water Main Specifications, dated 7/1/2014; and
- NYC DEP Specifications for Trunk Main Work, dated 7/2014.

The SB(s) modify and supersede portions of the applicable Standard Specifications. The provisions contained in this Contract's I-Pages, S-Pages and SW-Pages may further modify the applicable Standard Specifications.

The following SB(s) are included as part of this contract:

- SB 16-001 – REVISIONS TO THE NYC DOT STANDARD HIGHWAY SPECIFICATIONS.
- SB 16-002 – REVISIONS TO THE NYC DEP STANDARD SEWER AND WATER MAIN SPECIFICATIONS.
- SB 17-001 – UV CURED-IN-PLACE-PIPE (CIPP) LINING METHOD
- *SB 17-002 – SUPERSEDED BY SB 18-001*
- SB 17-003 – ENGINEERS FIELD OFFICE
- SB 17-004 – FIRE DEPARTMENT FACILITIES
- SB 17-005 – DIGITAL PHOTOGRAPHS
- SB 17-006 – RECORDS OF SUBSURFACE STRUCTURES
- SB 17-007 – MOBILIZATION
- SB 17-008 – QUALIFICATION CARDS
- SB 17-009 – SALVAGEABLE MATERIALS
- SB 17-010 – MILLED ASPHALTIC CONCRETE AGGREGATE
- SB 17-011 – DETECTABLE WARNING UNIT COLOR

- SB 17-012 – TEMPORARY HOUSE CONNECTION MATERIAL
- SB 18-001 – RODENT AND WATERBUG PEST CONTROL
- SB 18-002 – COLOR SURFACE TREATMENT FOR PAVEMENTS
- SB 18-003 – WATER AND SEWER GENERAL PROVISIONS
- SB 18-004 – CUTTING DUCTILE IRON PIPE
- SB 18-005 – STOCKPILES
- SB 19-001 – RESTORATION OF PAVEMENT SURFACE

The SB(s) are available online at: http://www1.nyc.gov/site/ddc/resources/specification-bulletins.page or for pickup between 8:00 AM and 4:00 PM at 30-30 Thomson Avenue, 3rd Floor, Division of Infrastructure, Long Island City, NY 11101. Contacts:

- Mr. Richard Jones, (718) 391-1417
- Mr. Salman Macktoom, (718) 391-2041

(NO FURTHER TEXT THIS PAGE)

GI- PAGES

STANDARD GREEN INFRASTRUCTRE SPECIFICATIONS

NOTICE

THE PAGES CONTAINED HEREIN ARE NEW SECTION OF WORK THAT SHALL APPLY TO AND BECOME A PART OF THE CONTRACT.

(NO TEXT ON THIS PAGE)

INFRASTRUCTURE DESIGN STANDARDS

STANDARD GREEN INFRASTRUCTURE SPECIFICATIONS

January 2019

Department of Design and Construction

Environmental Protection

THE CITY OF NEW YORK
DEPARTMENT OF DESIGN AND CONSTRUCTION

(NO TEXT ON THIS PAGE)

INTRODUCTION

This publication has been prepared by the New York City Department of Design and Construction (NYCDDC) to provide a compilation of standard requirements, called specifications, based on:

NEW YORK CITY DEPARTMENT OF ENVIRONMENTAL PROTECTION GREEN INFRASTRUCTURE STANDARD DESIGNS AND GUIDELINES FOR GREEN INFRASTRUCTURE PRACTICES visit NYCDEP web site on-line at:

http://www.nyc.gov/html/dep/pdf/green_infrastructure/bioswales-standard-designs.pdf

These specifications:

- define the Contractor's responsibility in meeting each specification;
- enumerate the Department's expectations;
- define how items will be measured and paid; and,
- explain what the Contractor is expected to provide.

This publication, entitled Standard Green Infrastructure Specifications dated January 2019, is incorporated by reference into the Department's construction contracts, it is made a part of that document.

These specifications are to be used in conjunction with NYCDOT STANDARD HIGHWAY SPECIFICATIONS VOLUME I & II (August 1, 2015 or latest version) and NYCDEP STANDARD SEWER AND WATER MAIN SPECIFICATIONS (JULY 1, 2014 or latest version) and with any other special specifications wherever applicable herein this BID DOCUMENT.

(NO TEXT ON THIS PAGE)

SECTION GI-1.06 — Additional General Conditions for Green Infrastructure Works:

Additional general conditions herein are to be followed in addition to SECTION 1.06 – General Conditions of NYCDOT STANDARD HIGHWAY SPECIFICATIONS VOLUME I of II.

GI-1.06.1. START OF CONTRACT WORK. The Contractor is notified that a Notice to Proceed (NTP) date will be issued for work to commence within 21 to 30 Days of Contract Registration. In the event the Contractor fails to complete all required services set forth in the Work Order within the specified time frame. Liquidated damages must be assessed on a daily basis in the amount specified in Schedule A on Page SA-1.

GI-1.06.2 WORK TO PROCEED WITH DILIGENCE AND DISPATCH. Timely completion of the Work of this Contract is critical to the completion of the milestone established in the Schedule A. Therefore, it is agreed that all Work hereunder must be executed at such time(s) and in or on such parts of the Contract and with sufficient work force(s), materials, and equipment, so as to assure timely Substantial completion of the work as well as the swift completion of all Work hereunder.

The Contractor is required to prepare a Progress Schedule in accordance with Article 9 of the Standard Construction Contract and the Substantial Completion date will be determined in accordance with Article 14 of the Standard Construction Contract. The Date of Final Acceptance will be determined when all work is final and complete in accordance with Article 14 of the Standard Construction Contract.

GI-1.06.3. WORK FORCE. The Contractor must work with sufficient crews unless a minimum number of crews is shown in the contract special provisions. The Engineer must periodically assess the rate of progress and may order the Contractor to mobilize additional work crews to complete the work on time. If the Contractor fails to comply with such orders within seven (7) calendar days after the written notice from the Engineer, the Contractor may, under Article 48 of the Standard Construction Contract, be declared in default of this contract.

GI-1.06.4. STANDARD ITEM.
Standard NYCDOT Sections, including, but not limited to, 4.02, 4.07, 4.08, 4.09,4.11, 4.13, 4.16, 4.17 and 6.02, will be required for the construction of Green Infrastructure Practices, if shown on the Contract Drawings or Standard Drawing and must be paid under their respective items.

GI-1.06.5. MAINTENANCE SCHEDULE
The Contractor must submit to the Engineer a proposed maintenance schedule for substantially complete Green Infrastructure practices. The schedule must encompass all work described in Section GI-7.13E of these specifications. The City will not recognize any site as "substantially complete" until the maintenance schedule for that site has been submitted to and approved by the Engineer and in consultation with NYCDEP.

GI-1.06.6. PRICES TO COVER.
No direct payment will be made for costs incurred in complying with the foregoing General Conditions, except as otherwise provided. Said costs will be deemed to have been included in the prices bid for all the scheduled items of the contract.

(NO TEXT ON THIS PAGE)

Table of Contents

(A) SPECIAL SPECIFICATIONS FOR THE WORKS NOT TO BE PAID .....
SECTION GI-R-1 — FINAL RECORD DOCUMENTS FOR GI PRACTICES GI-9
SECTION GI-2.16A — PVC PIPE GI-25
SECTION 2.26 – TOPSOIL GI-28
SECTION 4.10 - PLANT ESTABLISHMENT (POST PLANTING CARE) GI-31

(B) SPECIAL SPECIFICATIONS – FOR THE WORKS TO BE PAID .....
SECTION GI-P1 — PHOTO DOCUMENTATION GI-39
SECTION GI-2.06 — L-SHAPED EDGING GI-43
SECTION GI-2.07 — CLEAN OPEN GRADED STONE GI-44
SECTION GI-2.08 — HDPE BARRIER GI-49
SECTION GI-2.08L — IMPERMEABLE LINER GI-51
SECTION GI-2.09DR — GEOTEXTILE FABRIC FOR DRAINAGE GI-53
SECTION GI-2.10 — STEEL TREE GUARDS GI-58
SECTION GI-2.10PC — STEEL TREE GUARDS (POWDER COATED) GI-61
SECTION GI-2.13A — ENGINEERED SOIL AND SAND GI-65
SECTION GI-2.16 — HIGH DENSITY POLYETHYLENE (HDPE) PIPE GI-71
SECTION GI-2.17A — GABION (WITH CLEAN OPEN GRADED STONE) GI-74
SECTION GI-2.19 — HDPE STORMWATER CHAMBER GI-76
SECTION GI-4.06 — GI CONCRETE ELEMENTS GI-78
SECTION GI-4.20 — INTERIM COVER CROP FOR GI PRACTICES GI-82
SECTION GI-5.10 — STONE COLUMN GI-84
SECTION GI-5.13A — STORMWATER INLET GI-86
SECTION GI-5.35 — SLEEVE FOR UTILITY CROSSINGS GI-88
SECTION GI-6.09 — CONCRETE HEADER GI-90
SECTION GI-6.46 — EPOXY BONDED STONE STRIP BED GI-91
SECTION GI-6.51 PAVEMENT KEY ALONG CURB (3' TO 6' WIDE) GI-93
SECTION GI-6.70 — MAINTENANCE AND PROTECTION OF TRAFFIC GI-95
SECTION GI-7.01SGF — STEEL GRATE AND FRAME GI-97
SECTION GI-7.01SPC — STEEL PLATE CURB COVER GI-100
SECTION GI-7.13E — MAINTENANCE OF GI SITE GI-102
SECTION GI-8.20 — JUTE MESH GI-105
SECTION 4.16 - TREES (REMOVAL, TRANSPLANTING, PLANTING) GI-107
SECTION 4.17 - SHRUBS AND GROUNDCOVER GI-122
SECTION 6.02 PA PNEUMATIC EXCAVATION AROUND TREES GI-130
SECTION 6.02 PB BACKFILLING AROUND TREES GI-134
SECTION 6.29 – TUBULAR MARKERS GI-138

(NO TEXT ON THIS PAGE)

(A) SPECIAL SPECIFICATIONS
(FOR THE WORKS, NOT TO BE PAID)

(NO TEXT ON THIS PAGE)

SECTION GI-R-1 — FINAL RECORD DOCUMENTS FOR GREEN INFRASTRUCTURE PRACTICES

(NOT A PAY ITEM)

GI-R-1.1 SECTION INCLUDES

R-1.2 General Requirements for Submittals
R-1.3 Definitions
R-1.4 Paper
R-1.5 Electronic
R-1.6 Formats
R-1.7 As-Built Drawings
R-1.8 Final Copy Shop Drawings
R-1.9 Bid Set Specifications
R-1.10 Conformed Drawings
R-1.11 Change Orders
R-1.12 Job Photographs
R-1.13 Key Documents
R-1.14 Additional Documents
R-1.15 Quantities
R-1.16 Records in Paper Formats
R-1.17 Records in Electronic Formats
R-1.18 Measurement and Payment

GI-R-1.2 GENERAL REQUIREMENTS FOR SUBMITTALS

(A) Except where otherwise specified, the Contractor for each Contract must submit the following Final Record Documents according to the requirements of Table #1 in GI-R-1.13, and as specified herein:
  (1) As-Built Drawings
  (2) Final Copy Shop Drawings
  (3) Approved Working Drawings
  (4) Key Documents
  (5) Job Photographs
  (6) Job Videos
  (7) Additional Documents

(B) Submittal of these documents must be a condition precedent to obtaining the final payment under Article 45 of the Standard Construction Contract.

GI-R-1.3 DEFINITIONS

(A) Archive. In this Section, to "archive" must mean to furnish as a final record document.

(B) As-Built Drawings. The “As-Built Drawings” reflect the “as constructed” final product. These drawings must use the same title blocks and sheet numbers as the original “Contract Drawings”, with the exception that an “AB” is prefixed onto the original drawing number.

(C) Final Copy Shop Drawing (FCSD). The “Final Copy Shop Drawing” must be the approved copy (FAS or FAC) of the Shop Drawing corrected to reflect any deviations made for the installed condition showing the actual construction.

(D) Bid Set Specifications (including Addenda). The “Bid Set Specifications” must be the set of original Contract Specifications Text issued by NYCDDC for the solicitation of contract bids including any “Addenda” issued during the Bid Period.

(E) Change Orders. The "Change Orders" must include registered "Change Order Forms" and the complete sets of attached text and/or drawings for all Design and Field Change Orders.

(F) Job Photographs and Videos. "Job Photographs and Videos" must be prepared by the Contractor as specified in Subsection R-1.10 and must conform to the requirements of that Subsection.

(G) Key Documents. Key Documents must include, but not be limited, to the following items:
(1) Signed portions of the Standard Construction Contract (including Bonds)
(2) Signed and submitted Bid Schedule of Prices
(3) Award Folder Contents
(4) Contract Award Letter
(5) Order to Commence Work Letter
(6) Approved Detailed Estimate Breakdown
(7) Article 43/44 Substantial Completion of the Standard Construction Contract
(8) Substantial Completion Payment
(9) Final Evaluation
(10) Final Extension of Time (if applicable)
(11) Final Payment
(12) Claim Settlements (if applicable)
(13) Certificate of Occupancy (if possible)
(14) Warranties
(15) Survey

(H) Additional Documents. These must be any "Additional Documents" that the Engineer directs to be furnished as a "Final Record Document" in accordance with the requirements of this Section.

GI-R-1.4 PAPER

All records in paper formats must be produced in conformity with Subsection R-1.14 – Records in Paper Formats.

GI-R-1.5 ELECTRONIC

All records in electronic format must be produced in conformity with Subsection R-1.15 – Records in Electronic Formats.

GI-R-1.6 FORMATS

The "Final Record Documents" must be furnished in paper and electronic formats in the quantities shown on Table 1 - Summary of Final Record Documents to Be Furnished herein.

GI-R-1.7 AS-BUILT DRAWINGS

(A) The Contractor is to create an As-Built Drawing Set by revising the Contract Drawings electronically using AutoCAD. The Contractor must independently confirm that the changes made by the Addenda to the original specifications or Contract Drawings are correctly reflected in the As-Built Drawing Set. Files submitted in AutoCAD format will be bound to include all related matter (e.g. base files, font files and shapes). Each file must be viewable and printable in its entirety without recourse to external files. When a Contractor cannot provide AutoCAD versions of the As-Builts due to limited resources, the Engineer may approve hard copy submittal.

(B) The Contractor must use the information compiled during construction to create an As-Built Drawing Set. The Contractor must document any deviations, changes, etc. from the configurations shown on the original Contract Drawings or revised drawings issued

during the course of executing the work including Change Orders, Design During Construction (DSDC) memorandums, Requests for Information (RFIs), Requests for Clarification (RFCs), etc. These deviations, changes, etc. must generally relate to topographic features, relocation of structures, or locations of underground items such as pipelines, duct banks, manholes or footings. Survey distances, coordinates and/or elevations must be included to accurately locate all such items. All deviations, changes, etc. shown must be field verified.

(C) Contractor should have the electronic files of the contract drawings. However, should the Contractor require an additional copy, the Engineer will supply the Contract Drawings AutoCAD electronic files on DVD-Rs upon written request, if such copies are available. The AutoCAD files will consist of a bound set of drawings.

(D) Drawing Size – The As-Built drawings are to be the same size as the full size Contract Drawings.

(E) Generate the new As-Built drawing number as per the following steps:

(1) The As-Built drawing number is the original contract drawing number prefixed by an "AB" for As-Built.

Example: If the drawing number for a contract drawing is 36G-02S-14, the As-Built drawing number will be "AB-36G-02S-14".

(2) If a new drawing is produced, its number can be added to the end of the series. (i.e., if 14 is the last drawing in the series, then the first new drawing becomes 15; the second new one becomes 16, etc.)

(3) If a new drawing is inserted into the middle of a series, it is to have a letter suffix starting with A (i.e., 02A, 02B, etc.)

Example: If the drawing number for a contract drawing is 36G-02S-02, the new, additional As-Built drawing will be numbered "AB-36G-02S-02A".

(F) Designation – The designation "As-Built Drawing" is to be added to the drawing. Using AutoCAD, insert the words "As-Built Drawing" above the title box in the right hand corner of the drawing. (Do not include the quotation marks in "As-Built Drawing" when marking the drawing.)

(G) Modifying the Contract Drawings – Prior to submitting an As-Built drawing made from a Contract Drawing for review and acceptance, the Contractor is to create a "clean" finished copy of the drawing by undertaking the following:

(1) Remove all signatures and certifications from the Contract Drawing

(2) Remove all previous revisions and references from the revision boxes

(3) Remove the Professional Engineers seal, Engineer's company names, and any initials from the drawing title block

(4) Modify all of the original title boxes to show the Contractor information including the name of the Contractor and the date.

(5) Remove all previous markings – notes, revision indicators, balloons, submittal stamps, etc. – from the drawing.

(H) Contractor's Information – The Contractor's name, address, contact information and date (month and year) the project is completed is to be added to the drawing. Place this information in the title block in the space previously utilized for the Engineer's name.

(I) Adding Revisions – Items/areas changed are to be enclosed within a cloud line. The revision cloud layer is to be a 0.024-inch line thickness. The reason for the change should be indicated in a call out. Any associated RFI or Field Order should be specifically referenced.

(J) The Contractor must submit copies of the As-Built Drawings for review and approval by the Engineer. These submittals must show the deviations and changes from the original design drawings by using red-line mark-ups. The Contractor must make

modifications to the submitted As-Builts as required by the Engineer. The final As-Builts must be approved by DEP.

(K) The final approved set of As-Builts must have the following statement on the cover sheet:
"These As-Built Drawings for Contract ###, as prepared by XYZ Company, have been prepared as Record Copy Drawings."
The above statement must be signed by the representative of the Contractor. The signer must be identified along with the Contractor.

GI-R-1.8 FINAL COPY SHOP DRAWINGS (FCSD)

(A) Contractor must furnish all "Final Copy Shop Drawings" in the NYC Department of Design and Construction (NYCDDC) format to the Engineer. The required NYCDEP format will be provided by the Engineer to the Contractor. The "Final Copy Shop Drawing" must be the approved copy of the Shop Drawing corrected to reflect any deviations made for the installed condition showing the actual construction.

(B) In addition to submitting the "Final Copy Shop Drawings" as a final item at the end of construction, each Contractor must prepare and submit "Final Copy Shop Drawings" for approval on a continual basis during the performance of the project when the particular item of work for a "Final Copy Shop Drawing" has been completed. The Contractor must submit the FCSD within 30 days after the completion of the work item.

(C) The drawing revision boxes must have all previous revisions and references removed from the drawings. The revision boxes must indicate "Final Copy Shop Drawing".

(D) Each drawing must bear the original submittal file number, without the revision number, which must be written in the lower right hand corner of a drawing above the title box. The file number must also have a prefix, which identifies it a FCSD. Additionally, the Contract Name must be added, if it doesn't appear in the original file number.
For example, if the file number for an approved Shop Drawing is 16221-002, the FCSD will be numbered "FCSD-NC-36G-16221-002", where NC-36G represents the specific Contract Number.

(E) Supporting Documentation: Supporting documentation must bear the correlating Final Copy Shop Drawing file number so as to identify it. All supporting documentation (e.g. catalog cuts, test results, calculations, etc.) must be submitted, together with the related FCSD so as to maintain a complete set of all documents submitted with each FCSD.

(F) Submittal for Approval. Two full size paper prints of each drawing must be submitted for approval. The drawing must be checked by the Resident Engineer against the field records and a copy must either be stamped "Approved" or returned with comments for correction and re-submittal by the Contractor. The Contractor must retain one approved set of the FCSDs for use in submitting the entire set in paper and electronic copies.

GI-R-1.9 CHANGE ORDERS

All change orders (both field and design) produced during the construction of the projects must be archived.

GI-R-1.10 JOB PHOTOGRAPHS

Job Photographs must be produced and submitted by the Contractor as specified in Section GI-P1.

GI-R-1.11 KEY DOCUMENTS

Key Documents produced during the construction of the projects must be archived. They must consist generally of the items defined hereinbefore.

GI-R-1.12 ADDITIONAL DOCUMENTS

Any additional Documents such as Soil Classification Reports, Environmental Impact Statements, Site Assessments, Geotechnical Reports, permits, RFI's, etc. must also be archived when directed by the NYCDEP. If the Contractor does not have copies of any documents, they will be provided by the Engineer in electronic or paper format, where possible.

GI-R-1.13 QUANTITIES

The quantities to be furnished for each Final Record Document must be as shown in Table 1 - Summary of Final Record Documents to Be Furnished.

Final Record Document Type	Paper	Electronic (DVD-R sets)	Mylar
As-Built Drawings	3 sets per Contract Drawings	4 sets (PDF/A & AutoCAD) per Contract Drawings	1 set per Contract Drawings
Final Copy Shop Drawings	1 set	4 sets (PDF/A & AutoCAD)	NA
Approved Working Drawings	2 sets	4 sets (PDF/A & AutoCAD)	NA
Key Documents	1 set	4 sets (PDF/A)	NA
Additional Documents	1 set	4 sets (PDF/A)	NA
Job Photographs	1 set per GI asset	3 sets (TIFF or JPEG)	NA

GI-R-1.14 RECORDS IN PAPER FORMATS

(A) General

(1) This specification establishes criteria for paper documents that will last several hundred years without significant deterioration under normal use and storage conditions in the archives of the New York City Department of Environmental Protection.

(2) This specification identifies the properties of the paper and of the printing processes, and the tests required to demonstrate these properties.

(3) The specification applies to documents printed on paper which have a records retention and disposition schedule rating in excess of 25 years. Such documents are created by the consultants and contractors to the Department of Environmental Protection.

(B) Reference Standards

This specification is intended to be used in conjunction with following standards and guidelines. When these standards and guidelines are superseded by revisions, the revisions must apply:

(1) ANSI/NISO Z39.48, Permanence of Paper for Publications and Documents in Libraries and Archives. This Standard may be obtained in electronic format from HTTP://WWW.NISO.ORG.
(2) Library of Congress - Preservation Photocopying. This publication may be obtained in electronic format from the Department of Environmental Protection.
(3) National Archives and Records Administration Technical Information Paper No. 5, Tape Pull Test. This publication may be obtained in electronic format from the Department of Environmental Protection.
(4) National Archives and Records Administration - Peel Test target. This publication may be obtained in electronic format from the Department of Environmental Protection.

(C) Definitions
(1) Small-Format Documents: documents sized 11 by 17 inches or smaller.
(2) Large-Format Documents: documents sized larger than 11 by 17 inches.

(D) Quality Assurance
(1) Paper Certification: All documents covered by this specification must be accompanied by a Certification from the manufacturer of the paper that it complies with ANSI/NISO Z39.48.
(2) Printing Test Certification: The organization that operates the printing processes and materials used to produce the documents covered by this specification must submit the following documentation as proof that the tests have been carried out:
a. An affidavit, signed by the supervisor responsible for the production area, certifying that the tests have been performed in accordance with the procedures described in the National Archives and Records Administration Technical Information Paper No. 5, Tape Pull Test.
b. All of the Peel Test Targets actually used to perform the tests.

(E) Products
(1) Paper
a. All paper used for documents covered by this specification must comply with the requirements of ANSI/NISO Z39.48, Permanence of Paper for Publications and Documents in Libraries and Archives, except as amended by this specification. The ANSI/NISO Z39.48 Standard specifies the pH, tear resistance, alkaline reserves and paper stock required.
(2) Paper Stock
a. Coated or uncoated paper may be used.
b. Uncoated paper must not be less than 24 pounds basis weight.
c. Coated paper must not be less than 28 pounds basis weight.

(F) Printing Processes
(1) Small Format Documents, With Color Images and With Black and White Images
Only electrophotographic printing must be used. When color electrophotographic printing is used, the process must be certified by the manufacturer of the printer as not soluble in water, chemically stable, and resistant to fading, for a period of not less than 50 years. All documents printed using a color electrophotographic printer must be accompanied by a certification from the manufacturer of the printer that the process is in compliance with this requirement.
(2) Large-Format Documents, With Black and White Images
Only electrophotographic printing must be used. The Department of Environmental Protection expects that most large-format documents must be printed in black and white. Only documents where color is an essential information component of the document may be printed in color, under the provisions of Paragraph C. below. An example of documents where color may be an essential information component is a topographic drawing produced from data in a Geographic Information System.

(3) Large-Format Documents, With Color Images and With Black and White Images Either electrophotographic or inkjet printing must be used. When inkjet printing is used, a formulation of ink must be used that is certified by the manufacturer of the printer as not soluble in water, chemically stable, and resistant to fading, for a period of not less than 50 years. All documents printed using an inkjet printer must be accompanied by a certification from the manufacturer of the inks that the inks are in compliance with this requirement.

(G) Testing

(1) Test Method: All printing processes and materials used to produce the documents covered by this specification must be tested periodically to ensure proper function, using the National Archives and Records Administration Technical Information Paper No. 5, Tape Pull Test, and Peel Test Target.

(2) Test Frequency: All printing processes and materials used to produce the documents covered by this specification must be tested not less than twice a day, once at the beginning of the work day, and once at the end of the work day.

(H) Inspections

The Department of Environmental Protection reserves the right to carry out inspections of the production facilities without notice.

GI-R-1.15 RECORDS IN ELECTRONIC FORMATS

(A) General

(1) This Specification describes the requirements for the electronic records for the items specified in this section.

(2) This Specification does not cover digital objects which include a time base correction code (e.g., analogue or digital video recordings, analogue or digital audio recordings, instrumentation data feeds, etc.), or geo-coded objects (produced by Geographic Information Systems-GIS).

(B) Related Specifications

(1) Section R-1.14 – Records in Paper Formats

(C) Reference Standards

(1) Adobe Reference Specification for Tagged Image File Format (TIFF), revision 6.0 (1992).

(2) ANSI/AIIM MS44 – Recommended Practice for Quality Control of Image Scanners

(3) ANSI/AIIM MS52 – Recommended Practice for the Requirements and Characteristics of Original Documents Intended for Optical Scanning

(4) ISO/19005-1 - Document management -- Electronic document file format for long-term preservation -- Part 1: Use of PDF 1.4 (PDF/A-1)

(D) Definitions

(1) Archive. In this Section, to "archive" must mean to furnish as a final record document.

(2) Metadata - Metadata is commonly defined as “data about data.” For the purposes of this specification metadata refers to the “descriptive metadata” that describes the content and form of the construction records known as “final record documents” (i.e. contract name, document date, construction phase, engineer of record, etc.) and supports the discovery (searching) and identification of the resources. See Metadata Table.

(3) Portable Document Format-Archival (PDF/A) - A standard that identifies a "profile" for electronic documents that ensures the documents can be reproduced the exact same way in years to come. A key element to this reproducibility is the requirement for PDF/A documents to be 100% self-contained. All of the information necessary for displaying the document in the same manner every time is embedded

in the file. This includes, but is not limited to, all content (text, raster images and vector graphics), fonts, and color information. A PDF/A document is not permitted to be reliant on information from external sources (e.g. font programs and hyperlinks).

(E) Source of Electronic Records

In preparing the electronic records, the Contractor must make every reasonable effort to obtain, from the originator (e.g., the manufacturer, the designer, etc.), documents in their original electronic format and incorporate these in the records. Subject to the approval of the Engineer, electronic records may be scanned from a paper version only when the Contractor cannot obtain the electronic version from the originator (e.g., the manufacturer, the designer, etc.).

(F) File Compression, File Formats, and Quality Control

(1) File compression is not permitted for any of the files in any format.

(2) File formats acceptable to NYCDEP are ISO 19005-1 Portable Document Format-Archival (PDF/A); Tagged Image File Format (TIFF), version 6.0 ("II" format); and AutoCAD. All files must be delivered to NYCDEP with file names that use the default file extension for each of the above formats.

(3) Portable Document Format-Archival (PDF/A)

a. Security Settings: records converted to PDF/A must have all security settings deactivated (e.g., encryption, master passwords, and/or permissions) prior to transfer to NYCDEP. Deactivating security settings ensures NYCDEP's ability to support long term migration and preservation of the records. Uncoated paper must not be less than 24 pounds basis weight.

b. Review of Special Features: Because of the complexities associated with certain PDF/A features, NYCDEP may review PDF/A records containing special features on a case-by-case basis when the records are scheduled. Examples of special features include but are not limited to: digital signatures; links to other documents, files or sites; embedded files (including multimedia objects); form data; comments and/or annotations.

c. Fonts: electronic records that have been converted to PDF/A from their native electronic formats must have all fonts referenced in the record embedded within the PDF/A file to guarantee the visual reproduction of all text as created. This requirement is met by having, as a minimum, subsets of all referenced fonts embedded within the PDF/A file. All fonts embedded in PDF/A records must be publicly identified as legally embeddable (i.e., font license permits embedding) in a file for unlimited, universal viewing and printing.

d. Scanning Production Requirements: records converted from scanned images also must adhere to the production requirements described in AIIM MS52-1991, Recommended Practice for the Requirements and Characteristics of Documents Intended for Optical Scanning.

(G) Tagged Image File Formats (TIFF)

(1) In the 'II' format (i.e., little-endian), byte order is always from the least significant byte to the most significant byte.

(2) The reference specifications for TIFF 6.0 can be found at http://partners.adobe.com/public/developer/tiff/index.html (as of 08/2005).

(H) Vector Drawings

(1) Each vector drawing (produced by a Computer-Assisted Design system—AutoCAD) must be delivered to NYCDEP in two different file formats: native AutoCAD format and Portable Document Format (PDF/A). The AutoCAD format will support future revisions and alterations related to operations, repairs and rehab work. The PDF/A will ensure that the drawing information can be viewed and printed by a wide spectrum of users working without the AutoCAD program or viewer. The PDF/A format

is also intended to provide a stable preservation record copy of the original drawings.
(2) Drawings will be "bound" to include all related matter, such as base files, font files, and shapes. Each file must be viewable and printable, in its entirety, without recourse to external matter.
(3) The file format for all text files, whether converted from word processing applications or scanned, is Portable Document Format-Archival (PDF/A).
(4) The quality of documents to be scanned must be governed by ANSI/AIIM MS52 "Recommended Practice for the Requirements and Characteristics of Original Documents Intended for Optical Scanning".
The sampling rates for each type of quality control (visual and printed) must be established by written agreement with NYCDEP. The production subcontractor must supply a description of the quality control inspection performed as part of the scanning process and a report on the results of the last inspection performed on the images and the date of that inspection.
(5) Documents must be scanned using equipment and scanning parameters sufficient to ensure full reproduction of all significant detail in the documents, such as (but not limited to) curved lines and fill in drawings, color and tonal gradations in photographic images, the smallest printed text, handwritten notes, and signatures. Records may be scanned in bitonal (1-bit) mode and 300 pixels per inch (ppi) or better only when the records consist exclusively of clean printed type possessing high inherent contrast (e.g., laser printed or typeset on a white background). Records must be scanned in gray scale (8-bit) and 300 pixels per inch (ppi) or better when the records consist of textual documents of poor legibility because of low inherent contrast, staining or fading (e.g., carbon copies, thermofax, or documents with handwritten annotations or other markings), or that contain halftone illustrations or photographs. Records must be scanned in color (24-bit RGB) and 300 pixels per inch (ppi) or better when the records contain color information important to interpretation or content.

(l) Digital Photographs
(1) The file format for digital photographs is Tagged Image File Format (TIF).
(2) Photographic (raster) images may be produced directly by digital cameras or indirectly by scanning silver-gelatin images (film or prints). If the digital photographic images are produced indirectly by scanning silver-gelatin images, the preferred source is the silver-gelatin film image (whether negative or reversal) rather than prints made from that film image.
(3) Digital cameras and scanners must produce records with true optical resolution. Images must not be resized or interpolated to a higher resolution from a lower resolution.
(4) Photographic images must be provided as continuous-tone (8-bit) gray scale or color (24-bit or 48-bit RGB) raster images.
(5) Digital camera files must be captured as 6 megapixel files or greater with a minimum pixel array of 3,000 pixels by 2,000 pixels. Photographic images produced at this resolution and size is comparable in quality to 35-mm film photographs.
(6) Scanned photographs must be produced as minimum 3,000 line files to approximate a 6 megapixel file according to the following image size and resolution guidelines. Photographic images conforming to these guidelines will be comparable in quality to 35-mm film photographs. Scan an 8" x 10" original (print, slide or negative) at 300 dpi to produce a file that is 2,400 x 3,000 pixels. Scan a 4" x 5" original (print, slide or negative) at 600 dpi to produce a file that is 2,400 x 3,000 pixels. Scan a 35-mm original (print, slide or negative) at 2100 dpi to produce a file that is 2,000 x 3,000 pixels.

(7) Quality control in the scanning process must follow the practices established in ANSI/AIIM MS44 "Recommended Practice for Quality Control of Image Scanning" The sampling rates for each type of quality control (visual and printed) must be established by written agreement with NYCDEP. The production contractor must supply a description of the quality control inspection performed as part of the scanning process and a report on the results of the last inspection performed on the images and the date of that inspection.

(J) File Transfer Media

The current file transfer medium is a DVD-R. Alternative file transfer media may be used, at the discretion of Engineer. The DVD-Rs used for producing the electronic archives must be:

(1) MAM-A Mitsui Gold DVD-R with White Inkjet Printable Surface,

(2) Or approved equal.

(K) Execution

(1) General

a. When creating DVD-Rs, the Contractor should organize the information in separate DVD-R's as presented below. For each Final Record Item, use as many disks as needed to accommodate the materials. The multiple disks will be further labeled to read "1 of x". So, if three (3) DVD-Rs are needed to accommodate the material for a specific Final Record Item, the DVD-Rs will be labeled Disk 1 of 3, etc.

b. Separate DVD-R's must generally be prepared for the following items:
   i. As-Built Drawings
   ii. Final Copy Shop Drawings
   iii. Bid Set Drawings (aka Design Drawings)
   iv. Conformed Drawings
   v. Bid Set – Specifications (including Addenda) – with Conformed Set of Specifications
   vi. Key Documents
   vii. Change Orders
   viii. Job Photographs
   ix. Additional Documents

c. For projects with smaller amount of Final Record Document files, the above volumes can be combined.

d. In those cases where the Contractor is not required to furnish a specific Final Record Document(s), as specified in OGI Standard Specification Section 1.19 - Final Record Documents, the transmittal letter for the set of DVD-Rs should state "Prepared by Others" for the volume(s) which are not the responsibility of the Contractor.

e. DVD-R's should be used as efficiently as possible but efforts should be made to avoid splitting a type of document onto multiple disks. Example: for the Bid Specifications, if the Information for Bidders, Standard Construction Contract, General Conditions, General Specifications and part of the Detailed Specifications fit on one DVD-R, but the Detailed Specifications could fit on a single DVD-R in entirety, include the Agreement, General Conditions and General Specifications on one DVD-R. Then add the Detailed Specifications to a second DVD-R. The first DVD-R will include empty space but adding hyperlinks can be more efficiently done and viewers can locate information more easily by keeping information together as much as possible.

f. The DVD-R label must include:
   i. The Project by number and name
   ii. Location of the site

iii. Volume number and title(s) of the volume
iv. The total number of DVD-Rs for the Volume
v. The date (month and year) of when the materials were archived
vi. The preparer of the Final Record Document (i.e. Contractor or Consultant CM)
vii. Example of a label is located at the end of this Section as guidance.

g. Files submitted in AutoCAD format must be bound to include all related matter (e.g. base files, font files and shapes) so that each file is viewable and printable in its entirety without recourse to external files.
h. PDF/A files must be 1200 dpi print quality.

(2) Metadata

a. For each type of Final Record Document listed below, a metadata table must be prepared in Excel which will furnish the specified data for each type of document. The data elements to be furnished must comprise the column headings in the Excel table. The data elements must be furnished by the NYCDEP prior to production of the Final Record Documents DVD-Rs.
b. The Metadata Excel Table must appear at the beginning of related Final Record Document type specified above and must serve as an index for those items in that Volume. Each file indexed in the Metadata table must be hyperlinked so that clicking on the file name opens that file.
c. The Metadata Excel tables may be utilized as the Final Document Log. Templates for the Metadata Excel table for each Final Record Document must be provided by the NYCDEP.
d. Folder Structure
   i. Each DVD-R must have a folder structure that correlates to the major components of the Record Document, as specified below.
   ii. The first folder for each Record Document must always be the Metadata Table.

(3) Preparation of DVD-Rs for Final Record Documents. The DVD-Rs must be prepared with the following folder structures:

a. As-Built Drawings (when required)
   The first folder must always be the Metadata Table. The other folders must contain the entire set of As-Built Drawings in PDF/A and AutoCAD formats. Numbers must be used in the names for the folders so that they appear in the correct sequence. For example, the folders for a set of contract "G" drawings would look like this:
   1 - Metadata – Contract WI-79G– As-Built Drawings
   MetadataTable-ContractWI-79G– As-Built Drawings.xls
   2 - Contract WI-79G – As-Built Drawings (AutoCAD)
   3 - Contract WI-79G – As-Built Drawings (PDF/A)"
b. In the Metadata Table and on the DVD-R, the file numbers for each drawing must be:
   "AB-Contract Number-####"
   where "AB" = As-Built Drawings
   and "Contract Number" = the specific contract number
   and "####" = original sequential sheet number of the drawings (if the title sheet does not have a sheet number, it must be '0000')
c. Similar folders must be created in the DVD-Rs for the E, P, and H contracts

(4) Bid Set - Drawings (aka Design Drawings)

a. The first folder must always be the Metadata Table. The other folders must contain the entire set of original Design Drawings in bound AutoCAD and PDF/A formats. Numbers must be used in the names for the folders so that they appear in the correct sequence. For example, the folders for a set of contract "G" drawings would look like this:

1 - Metadata – Contract WI-79G – Design Drawings
Metadata Table – ContractWI-79G– Design Drawings.xls
2 - Contract WI-79G – Design Drawings (AutoCAD)
3 - Contract WI-79G – Design Drawings (PDF/A)

b. In the Metadata Table and on the DVD-R, the file numbers for each drawing must be:

"DES-Contract Number-####"
where "DES" = Design Drawings
and "Contract Number" = the specific contract number
and "####" = the original sheet number of the drawings (if the title sheet is unnumbered, it must be '0000')

c. Similar folders must be created in the DVD-R's for the E, P, and H contracts.

(5) Conformed Drawings

a. The first folder must always be the Metadata Table. The other folders must contain the entire set of Conformed Drawings in PDF/A and AutoCAD formats. Numbers must be used in the names for the folders so that they appear in the correct sequence. For example, the folders for a set of contract "G" drawings would look like this:

1 - Metadata – Contract WI-79G – Conformed Drawings
Metadata Table - ContractWI-79G– Conformed Drawings.xls
2 - Contract WI-79G– Design Drawings (AutoCAD)
3 - Contract WI-79G– Design Drawings (PDF/A)

b. In the Metadata Table and on the DVD-R, the file numbers for each drawing must be:

"CONF-Contract Number-####"
where "CONF" = Conformed Drawings
and "Contract Number" = the specific contract number
and "####" = original sequential sheet number of the drawings (the title sheet must be '0000')

c. Similar folders must be created in the DVD-R's for the E, P, and H contracts

(6) Final Copy Shop Drawings (FCSD)

a. The first folder must always be the Metadata Table. The other folders must contain the entire set of Final Copy Shop Drawings in PDF/A and AutoCAD formats. In the PDF/A file for each FCSD, all supporting documentation must be included as part of the file. Numbers must be used in the names for the folders so that they appear in the correct sequence. For example, the folders for a set of contract "G" drawings would look like this:

1 - Metadata – Contract WI-79G– Final Copy Shop Drawings
Metadata Table - ContractWI-79G– Final Copy Shop Drawings.xls
2 - Contract WI-79G– Final Copy Shop Drawings (PDF/A)
3 - Contract WI-79G– Final Copy Shop Drawings (AutoCAD)"

b. In the Metadata Table and on the DVD-R, the file numbers for each drawing must be:

"FCSD-Contract Number-XXXXX-####"
where "FCSD" = Final Copy Shop Drawing
and "Contract Number" must be the specific contract number
and "XXXXX" = the Specification Section Number that correlates to the FCSD (i.e. 16221)
and "####" = the sequential number of the drawing submitted for that specific Section.

c. Similar folders must be created in the DVD-R's for the E, P, and H contracts

(7) Bid Set – Specifications (Including Addenda)

a. For a multi-contract project, the "G" Contractor must archive the entire set of Bid Set of Contract Specifications (including the Detailed Specifications for the "G", "E", "H", and "P" contracts) and including all Addenda. The "E", "P", and "H" Contractors are only required to archive their respective Detailed Specifications.

b. For a project with a single contract, The Contractor must conform to the requirements for a "G" contractor and the requirements for ""E", "P", and "H" Contractors will not be applicable.

c. The Specifications and Addendum must be archived in PDF/A format as follows:

i. The preferred method or archiving is to use the original PDF files distributed as part of the Bid Set. If the Contractor does not have them, the Contractor should request them from Engineer.

ii. If for some reason the original PDF files are not available, the paper copies must be scanned in as PDF files.

d. The first folder must always be the Metadata Table.

e. For the "G" Contract:

i. The other folders must contain the entire set of original Bid Specifications and Addenda. The Conformed set of Specifications should also be included. Numbers must be used in the names for the folders so that they appear in the correct sequence. For example, the folders and subfolders for a set of contract "G" Bid Specifications would look like the following:

1 - Metadata – Contract WI-79G– Bid Specifications & Addenda

Metadata Table – Contract WI-79G– Bid Specifications and Addenda.xls

2 - Contract WI-79G– Bid Specifications (PDF/A)

a. BidSpec-WI-79G-V1of3.pdf

b. BidSpec-WI-79G-V2of3.pdf

c. BidSpec-WI-79G-V3of3.pdf

3 - Contract WI-79G– Addenda (PDF/A)

a. Addend-WI-79G-1of2.pdf

b. Addend-WI-79G-2of2.pdf

4 - Contract WI-79G– Conformed Specifications (PDF/A)

a. ConformedSpec-WI-79G-V1of3.pdf

b. ConformedSpec-WI-79G-V2of3.pdf

c. ConformedSpec-WI-79G-V3of3.pdf

ii. Each subfolder (i.e. in this example the subfolders are 2a, 2b, 2c, 3a, and 3b must contain a single PDF/A file with the all the material for that category. If possible, the PDF/A file must be bookmarked in such manner that the bookmarks are linked to the major chapters of each Volume.

iii. In the Metadata Table and on the DVD-R, the file numbers for these files must be:

Bid Spec-Contract Number-V#of#" or
Addend-Contract Number-#of#"

where "Bid Spec" = Bid Specifications or
"Addend" = Addendum
and "Contract Number" = the specific contract number
and V#of# = the volume number of the Contract Specification book or
#of# = the number of the Addendum issued

f. For the "E" "P" and "H" Contracts
   i. The other folders must contain only the Detailed Specifications for that Contract. Numbers must be used in the folder names so that they appear in the correct sequence. For example, the folders and subfolders for a set of contract "E" Bid Specifications would look like this:
      1 - Metadata – Contract WI-79E – Detailed Specifications
      2 - Contract WI-79E– Detailed Specifications (PDF/A)"
   ii. In the Metadata Table and on the DVD-R, for example, the folders and subfolders for a set of contract "E" Bid Specifications would look like the following:
      1 - Metadata – Contract WI-79E– Bid Set - Detailed Specifications
      Metadata Table - ContractWI-79E– Bid Set Detailed Specifications.xls
      2 - Contract WI-79E – Bid Set -Detailed Specifications (PDF/A)
      a. BidSpec- WI-79E-001.pdf

a. Similar folders must be created in the DVD-Rs for the E, P, and H contracts

(9) Key Documents

a. The first folder must always be the Metadata Table. The other folder must contain all the Key Documents. There must be a subdirectory for each Key Document. The subdirectory must include the name or description of the Key document. Each Key Document must be a single complete PDF/A file. For example, the folders for a set of contract "G" Key Documents would look like this:
   1 - Metadata – Contract WI-79G– Key Documents
   MetadataTable-ContractWI-79G– Key Documents.xls
   2 - Contract WI-79G– Key Documents (PDF/A)
   Key Documents 1 – Signed Pages from Standard Construction Contract
   Key Doc- WI-79G-001.pdf
   Key Documents 2 – Award Folder Contents
   KeyDoc- WI-79G-002.pdf
b. In the Metadata Table and on the DVD-R, the file numbers for the Key Documents files must be:
   "KeyDoc-Contract Number-###"
   where "KeyDoc" = Key Document
   and "Contract Number" = the specific contract number
   and "###" = the sequential number of the specific Key Document starting with 01
c. Similar folders must be created in the DVD-Rs for the E, P, and H contracts

(10) Job Photographs (when required)

a. Digital photographs should be in TIFF or JPEG format.
b. The first folder must always be the Metadata Table. The other folders must be organized as shown below. For example, the folders for a set of contract "G" Job Photographs would look like this:
   1- Metadata – Contract WI-79G– Job Photographs
   MetadataTable-ContractWI-79G– Job Photographs.xls
   2- Contract WI-79G– Job Photographs – Pre-Construction (TIFF)
   3- Contract WI-79G– Job Photographs – Construction (TIFF)
   4- Contract WI-79G– Job Photographs – Post-Construction (TIFF)"
c. In the Metadata Table and on the DVD-R, the file numbers for Job Photographs files must be:
   "JobPhoto- PreCon-Contract Number-#####"
   "JobPhoto- Con-Contract Number-#####"
   "JobPhoto- PostCon-Contract Number-#####"

where "JobPhoto"" = Job Photograph
and "Contract Number" = the specific contract number
and "PreCon" = Pre-Construction
and "Con" = Construction
and "PostCon" = Post-Construction
and "#####" = the sequential file number of all photos

(11) Job Videos (when required)

a. Digital videos should be in MPEG2 format as specified in Detailed Specification 01323 - Job Photographs and Videos.

b. The first folder must always be the Metadata Table. The other folders must be organized as shown below. For example, the folders for a set of contract "G" Job Photographs would look like this:

1- Metadata – Contract WI-79G– Job Videos
MetadataTable-ContractWI-79G– Job Videos.xls
2- Contract WI-79G– Job Videos – Pre-Construction (MPEG 2)
3- Contract WI-79G– Job Videos – Construction (MPEG 2)
4- Contract WI-79G– Job Videos – Post-Construction (MPEG 2)
5- Contract WI-79G – Job Videos – Informational (MPEG 2)

c. In the Metadata Table and on the DVD-R, the file numbers for Job Photographs files must be:

"JobVideo- PreCon-Contract Number-#####"
"JobVideo- Con-Contract Number-#####"
"JobVideo- PostCon-Contract Number-#####"
"JobVideo- Informational-Contract Number-#####"

where "JobVideo"" = Job Video
and "Contract Number" = the specific contract number
and "PreCon" = Pre-Construction
and "Con" = Construction
and "PostCon" = Post-Construction
and "Informational" = Information
and "#####" = the sequential file number of the Video

(12) Additional Documents

a. The first folder must always be the Metadata Table. The other folders, must be containing each individual set of Additional Documents as a single PDF/A file. The PDF/A File must be bookmarked for the major chapters so that each bookmark is linked to the start of that chapter. For example, the folders for a set of contract "G" Additional Documents would look like this:

1 - Metadata – Contract WI-79G– Additional Documents
MetadataTable-ContractWI-79G– Additional Documnets.xls
2 - Contract WI-79G– Additional Documents (PDF/A)
Additional Document 1 – Soil Classification Reports
AddDoc-WI-79G-001.pdf
Additional Document 2 – Environmental Impact Study
AddDoc- WI-79G-002.pdf

b. In the Metadata Table and on the DVD-R, the file numbers for Additional Documents files must be:

"AddDoc-Contract Number-###"

where "AddDoc"" = Additional Document.
and "Contract Number" = the specific contract number
and "###" = the sequential number of the specific Additional Document starting with 01

GI-R-1.16 MEASUREMENT AND PAYMENT

Payment for this work must be deemed to be included in the unit price bid for all scheduled items.

SAMPLE DVD-R LABEL



SECTION GI-2.16A — PVC PIPE
(NOT A PAY ITEM)

GI-2.16A.1 INTENT

This section describes Polyvinyl Chloride (PVC) pipe, fittings, flanges, unions, couplings, as specified in these NYC Department of Environmental Protection Standard Design and Guidelines for Green Infrastructure Practices drawings, or as required for a complete installation. Furnish and install all PVC pipe and fittings in accordance with the specifications, the manufacturers' recommendations, and approved shop drawings.

GI-2.16A.2 REFERENCES

(A) PVC pipe must conform to the latest standards of the American National Standards Institute (ANSI), the American Society for Testing and Materials (ASTM), the American Water Works Association (AWWA) and the National Sanitation Foundation (NSF).

(B) PVC pipe, gasket, and fittings must conform to the following ASTM and AASHTO standards:

(1) ASTM D3034 - Standard Specification for Type PSM Poly (Vinyl Chloride) (PVC) Sewer Pipe and Fittings

(2) ASTM D1784 - Standard Specification for Rigid PVC Compounds and CPVC Compounds

(3) ASTM D2412 - Standard Test Method for Determination of External Loading Characteristics of Plastic Pipe by Parallel – Plate Loading

(4) ASTM D3212 - Standard Specification for Joints for Drain and Sewer Plastic Pipes Using Flexible Elastomeric Seals

(5) ASTM D2321 - Standard Practice for Underground Installation of Thermoplastic Pipe for Sewers and Other Gravity-Flow Applications

(6) ASTM D2152 - Standard Test Method for Adequacy of Fusion of Extruded PVC Pipe and Molded Fittings by Acetone Immersion

GI-2.16A.3 SUBMITTALS

Submit catalog data for pipe, couplings, and other appurtenances.

GI-2.16A.4 CHEMICAL AND PHYSICAL REQUIREMENTS

(A) The pipe must be as uniform as commercially practicable in color, capacity, density and other physical properties.

(B) The pipe must be manufactured from high density polyethylene resin in accordance with ASTM D3350 and PPI TR4. The pipe must conform to cell classification PE424420C (ESCR Test Condition B) for 4- through 10-inch diameters, and 435420C (ESCR Test Condition B) for 12- through 60-inch diameters, as defined and described in the latest version of ASTM D3350, except that carbon black content should not

exceed 4%. The pipe material must conform to the following cell classification requirements:

Property	Value	ASTM Test Procedure Designation
Base Resin	PVC homopolymer	D 4216
Notched Izod	0.65 ft-lb/in	D 256
Tensile Strength	5,000 psi	D 638
Tensile Modulus	400,000 psi	D 638
DTUL @ 264 psi	154° F	D 648

(C) The pipe must contain no recycled materials or compounds.

(D) PVC pipe must be marked either continuously or on intervals not to exceed five (5) feet by indirect printing as specified in ASTM D1785

(1) Name and/or trademark of the manufacturer.

(2) Nominal pipe size.

(3) Material designation code

(4) Dimension Ratio (DR).

(5) Manufacturing Standard Reference.

(6) Production Code from which time and date of manufacture can be determined.

(E) Visible defects, such as cracks, creases, crazing, non-uniformly pigmented areas or undispersed raw materials must not be acceptable and will result in rejection of the pipe by the Engineer.

(F) PVC fittings must be manufactured to the requirements of ASTM D 3212 and this Specification. Fabricated fittings must be pressure rated to match the system piping.

GI-2.16A.5 MANUFACTURERS

(A) Advanced Drainage Systems, Inc. (ADS)
4640 Trueman Blvd. Hilliard, OH 43026
http://www.ads-pipe.com

(B) Hancor, Inc.
12370 Jacksontown Rd. #172
Findlay, OH 45840
http://www.hancor.com

(C) Royal Municipal Solutions
131 Regalcrest Court
Woodbridge, ONL4L 8P3
http://www.royalbuildingproducts.com/

(D) National Pipe & Plastics, Inc.
3421 Old Vestal Road
Vestal, NY 13850
http://www.nationalpipe.com/
(E) Or Approved Equivalent

GI-2.16A.6 METHODS

(A) Utilize care when lowering unit into the trench. Handle using nylon slings and two pick points.

(B) When the unit consists of two sections, place the downstream section first. Properly lube the bell and spigot to connect and home the remaining section.

(C) Use only couplings to join standard lengths of pipe and as required to complete a straight run of pipe. Do not use couplings to join random lengths of pipe and cuttings from standard lengths.

(D) During construction, keep the lines free from foreign matter. The piping must be left thoroughly clean to the satisfaction of the Engineer.

GI-2.16A.7 MEASUREMENT AND PAYMENT

No separate payment will be made for this work, the cost of which must be deemed to be included under all scheduled items.

SECTION 2.26 – TOPSOIL

(NOT A PAY ITEM)

2.26.1. INTENT.

This section describes Topsoil.

2.26.2. GENERAL REQUIREMENTS

Topsoil may be from natural sources or may be manufactured. Natural topsoil and manufactured topsoil must meet the same requirements, except as noted below.

Topsoil must meet the following requirements:

1) Must be of uniform quality;
2) Must be from a verifiable source;
3) Must be a loam topsoil with the addition of humus only and no added sand or clay;
4) Must be free of undesirable materials and materials toxic or otherwise deleterious to plant growth, including:
    a. Natural materials: hard clods, stiff clay, clay lumps, hardpan, sods, stones, and partially disintegrated stone;
    b. Foreign materials: lime, cement, concrete, ashes, slag, tar residues, asphalt, trash, refuse, and wood;
    c. Plant materials: plant growth, seeds, viable propagules of invasive plants, woody vegetation, stumps, roots, brush;
5) Must not be delivered in a frozen or muddy condition;
6) Natural topsoil must be obtained from an area that has never been stripped, and must be removed to the lesser of 1 foot or until subsoil is encountered.

2.26.3 ANALYTICAL REQUIREMENTS

Topsoil must be tested for:

- Sieve analysis (particle size)
- pH
- Organic matter
- Salinity
- Nutrient Content

(A) SIEVE ANALYSIS (PARTICLE SIZE)

Sieve analysis and classification must be performed per ASTM D2487, and meet the following requirements:

Component	Description	Percent of total, by weight
Coarse	2" or larger	0.0%
Gravel	≥ 2.0mm	3% maximum
Sand	0.05mm to 2mm	40% to 75%
Silt	0.002mm to 0.05mm	15% - 65%
Clay	< 0.002mm	20% maximum

(B) pH

pH must be between 6.0 to 7.5, inclusive, per ASTM D4972.

For median plantings where the bed has a footing, closed bottom, or base between the subgrade and the planting, pH must be between 5.5 to 7.2, inclusive, per ASTM D4972.

(C) ORGANIC MATTER

Organic matter is to be tested per ASTM D2974, using the ignition item method on dried moisture-free samples. The organic matter must meet the following requirements:

- Where the planting bed is open to the subgrade (i.e., street trees):3% to 12%
- Where the topsoil is for seeding or sodding: 3% to 8%
- Where the planting bed has a footing, closed bottom, or base between the subgrade and the planting (i.e., planters or raised median beds): 5% to 8%

(D) SALINITY

Soil salinity must not exceed 1.5 millimohs per centimeter at 25C, per USDA circular No. 892, using the electrical conductivity method.

(E) NUTRIENT CONTENT

Nutrient contents, measured in parts per million (PPM), must meet the requirements below:

Nutrient	Requirement
Nitrogen (N)	25 PPM minimum
Phosphorus (P)	5 PPM minimum
Potassium (K)	20 PPM minimum

Topsoil test results must show recommendations for soil additives or non-toxic fertilizers to correct nutrient deficiencies, as necessary.

2.26.4 SAMPLING AND TESTING

The Contractor must submit the following to the Engineer for approval:

1) Intended source of topsoil
2) Test reports, from an accredited 3rd party laboratory. The test reports must include the results of all tests in **Section 2.26.3**, and verify conformance. Acceptable 3rd party laboratories include state Cooperative Extension Laboratories, such as those operated by Cornell and Rutgers.
3) If requested by the Engineer, a representative sample of topsoil. The sample size must be at least 2 gallons, or as directed by the Engineer.

The above required submittals must be provided no less than 21 days prior to the scheduled delivery of topsoil. No delivery of topsoil will be allowed until the submittals are approved by the Engineer.

The initial sampling and testing for approval listed above is in addition to the sampling and testing of installed materials per **Section 5.03** (1 sample per 50 CY of topsoil installed). If the testing shows deficiencies in the installed material, the contractor may propose correcting the

installed material (i.e., using additives to adjust pH) instead of replacement, if approved by the Engineer.

2.26.5 INSTALLATION

Topsoil in an unworkable condition due to excessive moisture, frost, or other conditions must not be placed until it is suitable for spreading.

If geotechnical fabrics and/or drainage layers have been specified or are present, the condition of these items must be intact and free of holes, tears, or defects.

Before placing topsoil, the subgrade must be trimmed to a smooth uniform surface at the required distance below the finished grade. All hollows, depressions and gullies must be filled with acceptable material free from stones over two (2") inches in diameter, rubbish and other material which is unsuitable in the opinion of the Engineer.

After topsoil is spread, all large stiff clods, rocks, roots, or other foreign matter must be cleared and disposed of by the Contractor as approved so that the finished surface will be acceptable for mulching, jute mesh or planting.

Topsoil must be satisfactorily compacted, as directed by the Engineer.

The Contractor must be responsible for repairing any damage caused during the removal and replacement of topsoil, which includes, but is not limited to, plant material, irrigation systems, water proofing membrane, adjacent sidewalk, curb and gutter, pavements, planters, etc.

SECTION 4.10 - PLANT ESTABLISHMENT (POST PLANTING CARE)

4.10.1. INTENT. This work consists of the care of newly planted and transplanted trees, shrubs, vines, groundcovers and other plants in accordance with the contract documents and as directed by the Engineer.

4.10.2. DESCRIPTION. The Contractor must provide plant establishment (post planting care), including repairs or replacement if necessary, for all trees, shrubs, and groundcover that have been planted or transplanted.

4.10.3. MATERIALS. Materials must comply with the requirements of Section 4.16 and Section 4.17.

4.10.4. CONSTRUCTION DETAILS.

(A) ESTABLISHMENT PERIOD.

The Contractor must water, weed and maintain mulch or jute mesh at no cost to the City until the newly planted or transplanted material is accepted. Plants will be accepted when all specified plants meet the following conditions:

1. Species has been verified and plant is in its designated location;
2. Planted or transplanted in accordance with ANSI Z60.1;
3. Planted or transplanted in accordance with Section 4.16 and/or Section 4.17;
4. Plant is living, healthy, unimpaired and in an undamaged condition;
5. Plant has successfully passed the Establishment Period, as shown in the flowchart below.

Successful completion of the Establishment Period prior to the Period of Guarantee shown in Schedule A does not relieve the Contractor of the responsibility to maintain plants until the end of the Period of Guarantee.

Successful completion of the Establishment Period shall be determined by the Engineer.

For trees, the Contractor must obtain the certificate of acceptance from NYCDPR in writing and file the certificate with the Engineer. For understory plantings, the Contractor must obtain a certificate of acceptance from the appropriate City Agency, either NYCDOT, NYCDEP or NYCDPR, as directed by the Engineer, and file the certificate with the Engineer.

Successful completion of Post Planting Care in the flowchart below requires complete compliance with Subsection 4.10.4(E) ESTABLISHMENT PERIOD TASKS (POST PLANTING CARE), below, including all required watering and approval of the watering log.

The initial inspection and second inspection in the flowchart below must meet the following requirements:

1) The inspections will be scheduled for late summer, ideally in August, before the fall planting season.
2) The initial inspection will be scheduled for the first summer following the planting – the same calendar year for spring plantings, and the following calendar year for fall plantings.
3) The second inspection will be scheduled for the summer following the initial inspection.

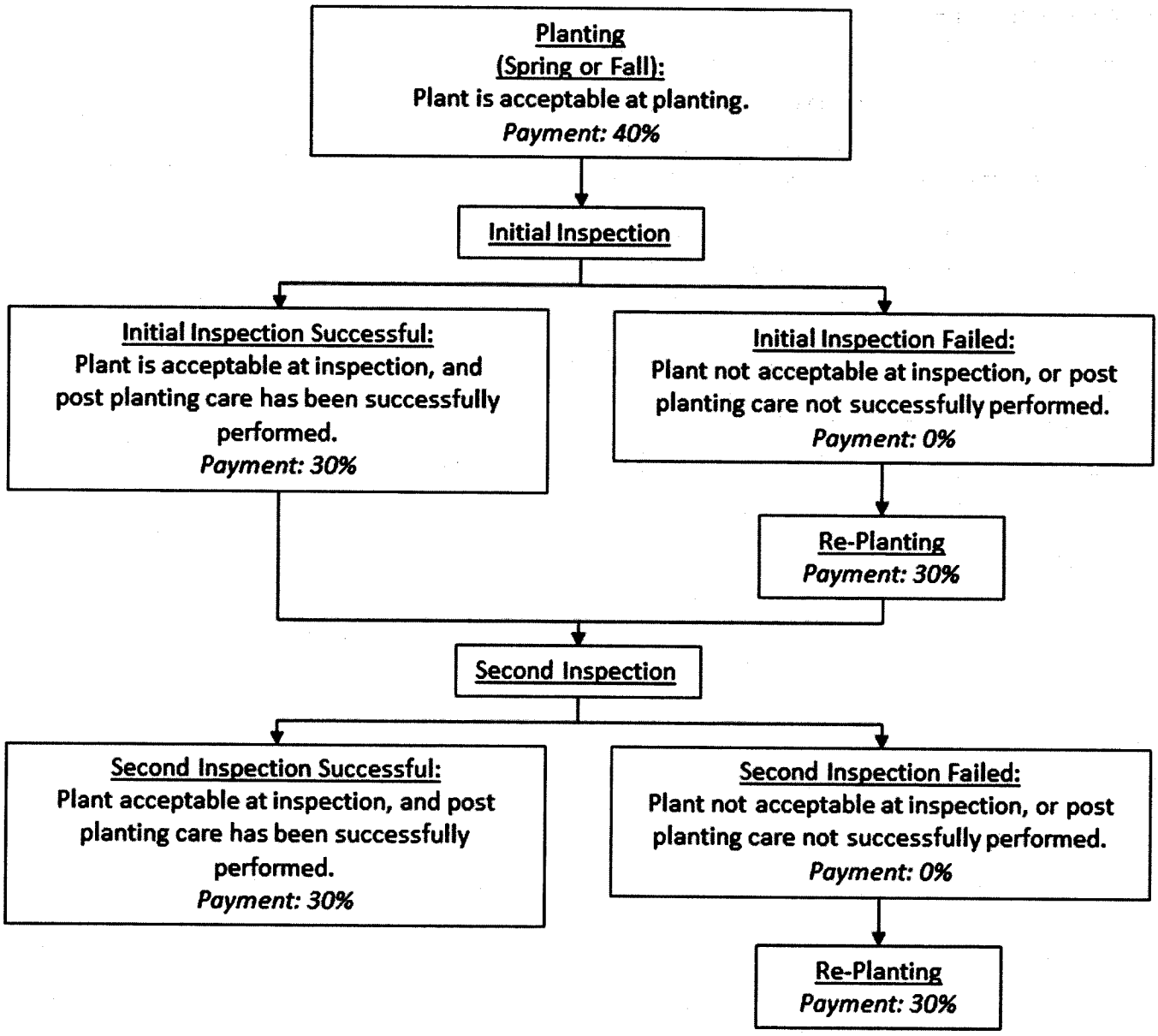

The re-planting in the flowchart below must be performed at the next applicable planting season. For plants that may be planted in the fall or spring planting season, the Contractor may request to schedule the replanting during the next spring planting season instead of the next fall planting season.

(B) REPAIRS OR REPLACEMENT.

The Contractor must remove and replace all plant material under establishment which die or, in the opinion of the Engineer, seem unhealthy, stunted or unable to flourish, within the establishment period, except as otherwise provided, and replace said plant material with new plants of the same size and species as originally installed, except when such death, unhealthiness, stunting or inability to flourish is due to vandalism or damage resulting from causes over which the Contractor has no control, as certified by the Engineer. However, the Engineer may, at their discretion, direct a substitution of species.

All hardscape elements within the planting bed or tree pit must remain on site and be replaced neatly at no additional cost to the City. Plants or trees that die within the establishment period must be replaced as many times as necessary so that there is a live plant or tree at each location at the end of the establishment period.

All dead, missing or impaired plant material must be removed within 15(fifteen) days of notification. Replacement plantings must occur within two (2) weeks or during the next species appropriate planting season, as directed by the Engineer. The Contractor is advised that the appropriate planting season may be only in the spring.

If, in the opinion of the Engineer, the weather is unsuitable for making repairs or replacements at the time of such determination, the Contractor must make the required repairs or replacements when permitted by the Engineer.

Unless otherwise permitted or directed, defective trees, as determined by the Commissioner, must be replaced with new trees by the Contractor. The furnishing and planting of trees as replacements for defective trees must comply, in all respects, with the contract requirements.

(C) COMPLETE REPAIRS PREVIOUS TO EXPIRATION OF GUARANTEE.

Just previous to the expiration of the Contract's Period of Guarantee, the entire work must be inspected, and any plants that are dead or unhealthy and unable to flourish must be immediately replaced by the Contractor in a manner acceptable to the Engineer. When required by the Engineer, such unhealthy or dead plants must be replaced in accordance with the requirements of the contract and the specifications. At the expiration of the Period of Guarantee, the Contractor must leave the planted area cultivated and weed free. This work will be in addition to the Establishment Period.

(D) CONTRACTOR TO NOTIFY ENGINEER BEFORE MAKING REPAIRS.

The Contractor must include all repair or replacement work on the weekly schedules submitted to the Engineer as required by Section 1.06.25. Additionally, the time and place of such work must be provided to the Engineer daily.

(E) ESTABLISHMENT PERIOD TASKS (POST PLANTING CARE).

Post-planting care must consist of watering, mulching, jute mesh maintenance, weeding, integrated vegetation and pest management, pruning, repair or removal of tree support systems if present, and other horticultural operations necessary for the proper growth of all plants, and for keeping the entire area within the contract limits neat in appearance as specified or directed by the Engineer. The Engineer may make interim assessments of the post planting care progress.

The contractor must prepare and submit to the Engineer a post-planting care work schedule for approval.

(1) Watering

The Contractor must be responsible for setting up a regular schedule for weekly watering between April 1st and November 15th and for notifying the Engineer of any deviation from that schedule at least 2 (two) working days in advance of the regularly scheduled watering date. If watering is to occur other than standard working hours (7 AM – 4 PM weekdays), the Contractor must coordinate with the Engineer for inspection.

The Contractor must provide water without damage to plants, mulch, jute mesh, stakes, plant saucers, sod or other areas to be watered. Each plant saucer must be carefully filled with water in a manner which does not erode the soil or the plant saucer. Watering must not cause

uprooting or exposure of plant's roots to the air. Damage resulting from watering operations must be repaired at no additional cost to the City.

Watering must be applied at the following rates:

1. Turf, Wildflowers, Sod, Planting Beds. In the absence of 1 inch of rainfall within 5 consecutive calendar days the Contractor must apply a total of 1" of water to all turf, wildflowers, sod and planting beds once a week. The Contractor must install witness sticks, installed to the desired watering depth, to assist the watering personnel in providing the required depth of water.
2. Trees and Planting Pits. Between April 1st and November 15th, in the absence of 1 inch of rainfall within 5 consecutive calendar days, the Contractor must apply water to trees and planting pits once per week, except during July and August, when water must be applied twice per week, with a minimum of 2 days between applications. Soil saucers or portable drip irrigation systems must be filled once per watering. At least 10 gallons of water per tree caliper inch must be used per tree at each watering (for example, a 3" tree requires 30 gallons per watering). The contractor must use a water meter (flow meter) to verify the volume of water applied.

Water applied to seeded or sodded areas, plants or planted areas must be free from oil, have a pH not less than 6.0 nor greater than 8.0 and must be free from impurities injurious to vegetation. Unless otherwise directed, water may be drawn from mains owned by or supplying water to the City of New York.

Where water is supplied from City hydrants, the Contractor must obtain a hydrant permit from the Department of Environmental Protection. Permits are issued for a 30-day period, and the Contractor is responsible for keeping the permits current. The Contractor must have all tools and permits necessary for using city hydrants in their possession. If conditions do not allow the use of New York City water sources, the Contractor must obtain their own source of water. No direct payment must be made for water obtained from other than city sources, but the cost thereof will be deemed included in various items of the contract.

During dry conditions as defined by the Engineer, the Contractor will add to water a wetting agent product that is meant to aerate soil and allow for more water to penetrate such as Yuccah® Wetting Agent, or DIEHARD™ Soluble Yucca Extract as manufactured by Plant Health Care, or Horticultural Alliance, Inc., or an approved equal. An anti-desiccant to help prevent loss of water through transpiration must also be used when directed by the Engineer. The anti-desiccant product, approved by the Engineer, must be mixed into water at appropriate ratios (Contractor must follow product instructions). Wetting agent, if required, must be provided at no additional cost.

Any watering bags must be removed at the end of the watering season in October and replaced at the first watering in May during the establishment period.

The Contractor must maintain a watering log, which must be submitted monthly to the Engineer for approval. The watering log must:

- Indicate the dates and times all watering was performed and the employee that performed the watering;
- Verify the depths that water was applied to turf, wildflowers, sod, and planting beds;
- Verify the volume of water applied to trees and planting pits. This must include before and after readings from the water meter used.

If the Engineer determines, from inspection of the plants or by reviewing the watering logs, that the Contractor's watering effort is insufficient, the Engineer may direct the Contractor to increase the watering efforts, at no additional cost to the City.

(2) Mulching

The contractor must apply mulch in accordance with the requirements of Section 4.16 and Section 4.17, or jute mesh if required by a special specification. Mulch (or jute mesh if required) must not cover plants or be in contact with tree root flare, tree trunks, and plant stems.

Shredded Bark Mulch (or jute mesh if required) must be applied as a ground cover to the surface of all planting beds at the time of planting, one year after planting when the tree stakes are removed, and at the start of each watering season during the establishment period.

If necessary, the Contractor must add topsoil to planting beds prior to mulching or installing jute mesh if soil levels are below the grade of the surrounding sidewalk or pavement, or if soil levels do not match the grading shown on the plans.

(3) Weeding

The Contractor must remove and dispose of weeds including roots prior to flowering and seed formation by manual, chemical or mechanical means within the period from May 15th to October 31st, and such cultivating and weeding must be repeated at least every four (4) weeks or more frequently as required elsewhere in the contract documents. Chemical weed control methods may be used if applied by a NYSDEC Certified Pesticide Applicator and approved by the Engineer. Any method of weed removal that leaves live roots in the soil will not be permitted. Under no conditions will weeds be allowed to attain more than six (6) inches of growth including weeds within planting beds where plants have died, are missing, or have been vandalized and are scheduled to be replaced. The Contractor must ensure the preservation of desirable vegetation. Desirable plants unintentionally killed or removed by the Contractor must be replaced at no cost to the City.

(4) Integrated Vegetation and Pest Management

In the event of threat of serious damage from insects or diseases the plants must be treated by preventative or remedial measures. The Contractor must control insects, fungus, and other diseases. Methods may include spraying with an approved insecticide or fungicide.

(5) Pruning

Tree Pruning must be done in accordance with the requirements of Section 4.18 and as directed by the Engineer. Pruning of all plants must comply with ANSI A300 (Part 1) standards and must be conducted a minimum of two (2) times during the establishment period to remove dead or damaged branches.

(6) Repair and/or Removal of Tree Support Systems

If tree support systems are present, the Contractor must be responsible for inspecting and adjusting or repairing the systems once every six months during the establishment period. The Contractor must also be responsible for removal of the tree support system, if present, at the end of the establishment period.

(F) TRANSFER TO MAINTENANCE PARTNER.

Where the City has identified a long-term maintenance partner (entity that will maintain the plantings after completion of the Contract) for certain planting locations, and in the Engineer's sole discretion, the Contractor may be directed to turn over maintenance activities for such

plantings to the City's identified maintenance partner prior to substantial completion of the Contract. The Engineer will be solely responsible for deciding to turn over maintenance activities, and requests from the Contractor will not be entertained. If the Engineer requests that maintenance activities will be turned over to the maintenance partner, the Engineer will provide such direction in writing and must include:

- Date for acceptance walkthrough with the maintenance partner;
- Date for turnover to the maintenance partner;
- Written confirmation from the maintenance partner for the turn over.

Where the Contractor has been directed to turn over maintenance of plantings to the City's identified maintenance partner prior to substantial completion:

- The City's maintenance partner will be responsible for completing the plant establishment tasks and maintenance.
- The Contractor will be responsible for fulfilling all NYC DPR permit requirements, and allowing the maintenance partner access, where necessary, to the plantings.

This provision will not be applicable to street trees. Nothing in this section shall relieve the Contractor of its obligation to protect the Work, the plantings, or other property in accordance with Article 7 of the Standard Construction Contract.

4.10.5. PRICE TO COVER. No separate payment will be made. The cost of furnishing all labor, materials, plant, equipment, insurance, and necessary incidentals required must be included in the unit price items bid for the various planting materials including, but not limited to Trees, Shrubs, Perennials, Grasses and Groundcovers.

(B)SPECIAL SPECIFICATIONS
(FOR THE WORKS TO BE PAID)

(NO TEXT ON THIS PAGE)

SECTION GI-P1 — PHOTO DOCUMENTATION

GI-P1.1 GENERAL REQUIREMENTS

The Contractor must engage the services of an experienced professional photographer, approved by the City, to take color job photographs. The photographer will be required to take pre-construction, construction and post-construction photographs of the work as directed by the Engineer.

(A) Pre-Construction Photographs

The photographer must visit the site prior to start of construction to take a total of five (5) photographs per Green Infrastructure Practice asset showing existing condition of the Green Infrastructure Practice site and any adjacent areas which could possibly be disturbed during construction.

(B) Construction Photographs

The photographer must visit the site before the clean open graded stone is placed and take five (5) photographs per Green Infrastructure Practice asset to show the work in progress, and any adjacent areas which were disturbed during construction.

(C) Post-Construction Photographs

The photographer must visit the site at the completion of construction to take a total of five (5) photographs showing the completed work and any adjacent areas which were disturbed during construction.

GI-P1.2 PRODUCTS

(A) Photographs

(1) For the purposes of this Section, a photograph must be defined as one (1) exposure.

(2) Three (3) color 8" x 10" (or 8-1/2" x 11") glossy prints of each photograph must be submitted to the Engineer. Digital images must be submitted along with the color glossy prints. The prints must have indelibly printed on their reverse side the information listed below. The same information must be printed on a sheet of paper in a clear sleeve to be included in the binder holding the prints, slides, and CD-Rs.

a. Green Infrastructure Practice Number.

b. Project number.

c. Project name.

d. Contract number and description.

e. Photo number.

f. Date picture was taken.

g. View and description, indicating location of camera, general description of what photograph represents and whether this is a pre-construction, construction or post-construction photograph. (A plot plan must be submitted by the Contractor indicating location and photo number of all photographs.) The Contractor must transmit one print of each photo to the Engineer for use in preparing descriptions. The photos with descriptions will be returned to the Contractor for printing description, mounting, etc.

h. Name of photographer.

i. Engineer or Engineer's Representative.

(3) The Engineer will accompany the photographer for the taking of all photographs.

(4) The Contractor must furnish hard-back binders to hold the three (3) sets of prints and the digital images. The binders, print, and digital images must meet the requirements of ISO 18902:2001 "Imaging materials -- Processed photographic films, plates and papers -- Filing enclosures and storage containers".

(5) Digital photographs must be created, indexed and transferred to the Department of Environmental Protection in accordance with the requirements of Section R-1.17, 'Records in Electronic Formats'. The Contractor must provide the Engineer with updated images on a monthly basis.

GI-P1.3 EXECUTION

(A) Use of Photographs

(1) All photographs, slides, prints and negatives, resulting from the work under this Contract, must become the property of the City upon their approval by the Engineer and may be used in whole or in part and in such manner or for such purpose as the City may desire, without any additional compensation to the Contractor or photographer.

(2) All photographs, aerials, slides, prints, negatives, reports, documents, data, or other materials produced pursuant to this Agreement ("Copyrightable Materials") must be considered "work-made-for-hire" within the meaning and purview of Section 101 of the United States Copyright Act, 17 U.S.C. '101, and the City must be the copyright owner thereof and of all aspects, elements and components thereof in which copyright protection might subsist. To the extent that the Copyrightable Materials do not qualify as "work-made-for-hire," the Contractor and the photographer hereby irrevocably transfer, assign and convey exclusive copyright ownership in and to the Copyrightable Materials to the City, free and clear of any liens, claims, or other encumbrances. Neither the Contractor nor the photographer must retain any rights pertaining to the Copyrightable Materials, including any copyright or intellectual property interests, nor must they reproduce, publish, disseminate or otherwise use any of the Copyrightable Materials without the prior written approval of the City.

(3) The Contractor and the photographer acknowledge that the City may, in its sole discretion, register copyright in the Copyrightable Materials with the U.S. Copyright Office or any other government agency authorized to grant copyright registrations. The Contractor and the photographer must cooperate in this effort, and agree to

provide any further documentation necessary to accomplish this.

The Contractor must not retain any copy of any photograph taken for the project unless the Contractor specifically requests and receives written approval from the Engineer who in consultation with NYC Department of Environmental Protection must allow the Contractor to retain specific construction photographs. The request for approval must be processed through the Resident Engineer. The Contractor must not request or procure copies for the Contractor's use of any photograph from the photographer without this written approval.

GI-P1.4 DIGITAL PHOTOGRAPHS

(A) The file format for digital photographs is Tagged Image File Format (TIFF).

(B) Photographic (raster) images may be produced directly by digital cameras If the digital photographic images are produced indirectly by scanning silver-gelatin images, the preferred source is the silver-gelatin film image (whether negative or reversal) rather than prints made from that film image.

(C) Digital cameras and scanners must produce records with true optical resolution. Images must not be resized or interpolated to a higher resolution from a lower resolution.

(D) Photographic images must be provided as color (24-bit or 48-bit RGB) raster images.

Digital camera files must be captured as 6-megapixel files or greater with a minimum pixel array of 3,000 pixels by 2,000 pixels. Photographic images produced at this resolution and size is comparable in quality to 35-mm film photographs.

GI-P1.5 PAYMENT

(A) All costs associated with this Section must be included as specified in the Measurement and Payment section of the Contract. The Contractor must produce one Set of photographs for each Green Infrastructure practice asset.

(B) A Set of photographs includes all Pre-Construction, Construction and Post-Construction Photographs as required in this section.

(C) Should more than the specified number of photographs be required, the Contractor will be paid at a negotiated price for each photograph over the specified number requested in writing by the Engineer.

(D) The Engineer reserves the right to reject any photograph that is not clear or definitive. Any photograph so rejected must be subtracted from the total exposures before computations for payment or credit under this Section.

GI-P1.6 MEASUREMENT AND PAYMENT

The quantity to be measured for payment will be the number of SETS of Photographs furnished by the Contractor, to the satisfaction of the Engineer.

The contract price bid per set must cover the cost of furnishing all labor, materials, plant,

equipment, insurance, and necessary incidentals required to completing the work including, but not limited to, the cost of the photographer, photograph binders, and digital photographs; all in accordance with the specifications and the directions of the Engineer.

Payment will be made under:

Item No.	Item	Pay Unit
GI-P1	PHOTO DOCUMENTATION	SETS

SECTION GI-2.06 — L-SHAPED EDGING

GI-2.06.1 INTENT

Under this section, the Contractor must furnish and install new landscape edging adjacent to the concrete strip in Green Infrastructure practice as specified herein in accordance with the NYC Department of Environmental Protection Standard Design and Guidelines for Green Infrastructure Practices drawings and as directed by the Engineer.

GI-2.06.2 MATERIALS

Edging must consist of L-shaped PVC or aluminum edge restraint product, a minimum of five and a half (5 ½") inches high by five and a half (5 ½") inches wide, in up to ten (10) foot lengths. The thickness of the material must be a minimum of 0.12 inches. Nine (9) inch minimum length stakes must be installed a minimum of every two (2) feet on center. The color of the edging must be black.

Edging must be Teco-Edg Specialty Edge Restraint manufactured by Oly Ola Edgings, Inc. in Villa Park, IL; GeoEdge Aluminum Green Building Edging manufactured by Permaloc Corporation in Holland, MI; or approved equivalent. Submit product cut sheets as shop drawings for Engineer's approval prior to ordering the product.

GI-2.06.3 DESCRIPTION

The edging must be installed adjacent to the concrete strip in Green Infrastructure practice where required, as shown on Contract Drawings and in accordance with the specifications and the directions of the Engineer.

GI-2.06.4 METHODS

The edging must be installed true to line and grade in accordance with the drawings and as directed by the Engineer. The "L" of the edging must face towards the curb, and the top of the "L" must be at or below the concrete curb elevation. Precast concrete strip or Stone Strip at Stormwater Greestreet Outlet must be placed on top of the edging as per the drawings and as directed by the Engineer.

GI-2.06.5 MEASUREMENT AND PAYMENT

The quantity of Landscape Edging to be measured for payment must be the number of linear feet of edging incorporated in the finished work, to the satisfaction of the Engineer.

The contract price bid per linear foot of Landscape Edging must cover the cost of all labor, materials, equipment, insurance, and incidentals necessary to furnish and place approved "L" shaped Edging at the site to complete the work including, but not limited to, furnishing and installing 9" stakes, "H" clips and caps for joining lengths of edging; all in accordance with the Contract Drawings, the specifications and the directions of the Engineer.

Payment will be made under:

Item No.	Item	Pay Unit
GI-2.06	L-SHAPED EDGING	L.F.

SECTION GI-2.07 — CLEAN OPEN GRADED STONE

GI-2.07.1 INTENT

This section describes the types of clean open graded stone also described as stone cover or open-graded stone base in the NYC Department of Environmental Protection Standard Design and Guidelines for Green Infrastructure Practices drawings.

All materials for this work must comply with the latest New York State Department of Transportation, Standard Specifications, Coarse Aggregate, Section 703-02. The stone must be washed and 3/4", 3/8", 1 1/2" and 3" to 4" in sizes.

The thicknesses and locations of the "clean open-graded stone" must be as shown on the Contract Drawing Details, the DEP Standard Designs and Guidelines for GI or as determined by field conditions and ordered by the Engineer.

GI-2.07.2 MATERIALS

Use of screened rounded gravel is prohibited.

All Clean open graded stone material acceptable under this section must be sound, hard, durable, unweathered stone freshly broken. All open graded stone must be double-washed and clean and free of all fines and debris, not contaminated with clay, and free from any organic or other deleterious material.

Table 1 – Sizes of Stone

Size	Nominal Size	US Standard Sieve Sizes (Percent Passing)												
		4 in	3½ in	3 in	2½ in	2 in	1½ in	1 in	¾ in	½ in	3/8 in	No. 4	No. 8	No. 16
A	3/8 in. to No. 8	-	-	-	-	-	-	-	-	100	85 to 100	10 to 30	0 to 10	0 to 5
B1	¾ in.	-	-	-	-	-	-	100	0 to 15	-	-	-	-	-
B2	¾ in. to 3/8 in.	-	-	-	-	-	-	100	90 to 100	20 to 55	0 to 15	0 to 5	-	-
C	1½ in.	-	-	-	-	100	0 to 15	-	-	-	-	-	-	-
D	3 in. to 4 in.	100	90 to 100	0 to 15	-	-	-	-	-	-	-	-	-	-

Clean Open Graded Stone of all types must be aggregate size per Table #1. Thickness, Widths and all dimensions must be as shown on the standard details and contract drawings or as otherwise directed by the engineer. All open graded stone must be properly compacted. The types of aggregate use for each Green Infrastructure use will be as per the following.

Table 2 - Types of default clean open graded stone choices unless otherwise specified on drawings or as directed by the Engineer:

GI Use	Course	Stone Type
Porous Concrete Panels	Screed / Leveling	A
	Reservoir	B1
Permeable Pavers	Screed / Leveling	B2
	Reservoir	C
Porous Asphalt	Screed / Leveling	C
	Reservoir/Asphalt Sub– Base	B1
Bio Swales, & Infiltration Basins	Reservoir Base	D
	Leveling	B1
Rain Gardens & Green Strips	Reservoir Base	D
	Leveling	B1
	Stone Strip Bed	B2
Bio Filter Inlet	Broken Stone Berm	C
Stone Column	n/a	D

GI-2.07.3 SUBMITTALS

(A) The Contractor, prior to the start of work, must submit to the Engineer for approval samples of the clean open graded stone that have been sampled in accordance with the requirements of ASTM D 75. The minimum size of sample must be in accordance with the requirements of ASTM D 75 – TABLE 1 Minimum size of Field Samples.

(B) Certified material test reports showing that the clean open graded stones meet the specified requirements must be submitted for each shipment and identified with specific lots prior to installing materials. Clean open graded stones used in the work must conform to the approved samples.

(C) The manufacturer must submit certified test date to cover each shipment of the material.

(D) Results of the coarse aggregate gradation analyses, with full reporting of all information in AASHTO sieve sizes, in accordance with the ASTM C 136.

(E) Results of the void-ratio analyses, with full reporting of all information, in accordance with the ASTM C 29.

GI-2.07.4 CONSTRUCTION METHODS

(A) Weather Consideration

(1) Do not place and/or compact clean open graded stone subbase in rain or snow, or on saturated or frozen subgrade.

(2) Do not place and/or screed clean open graded stone base in rain or snow, or on saturated or frozen subbase.

(B) Stockpiling and Sampling of clean open graded stone Reservoir and Leveling Course Aggregate

(1) All material must be stockpiled, unless otherwise directed. Stockpile construction requirements, sampling, testing and acceptance/rejection procedures must be as stipulated in the New York State Department of Transportation Section 703-02 – Coarse Aggregates.

(2) No material must be added to a stockpile after the stockpile has been sampled for approval. Only material from approved stockpiles must be placed on the subgrade for this section. The presence of any oversize particles in the stockpile will be cause for rejection of the entire stockpile. No material must be removed for use from any stockpile until the stockpile has been sampled, tested, and approved in writing, by the Engineer, for placement on the subgrade. It must be the duty of the Contractor to furnish suitable and approved excavating equipment for such sampling. Approval of a stockpile for placement on the subgrade must not relieve, in any degree, the full responsibility of the Contractor to furnish, in its compacted position, a subbase course of select granular materials, the final condition of which conforms to all the requirements of the specifications for this section. In the event the Contractor must have a plant or procedure resulting in subbase course material of uniform quality, at a rate satisfactory to the Engineer, and such that satisfactory samples for tests can be obtained, the requirement for stockpiling may be waived. Prior approval of the Engineer must be obtained and the work must be done in accordance with such conditions as may be imposed in the approval. Such waiver must remain in force only so long as a satisfactory material is produced.

(C) Subgrade Preparation

(1) The Subgrade Under The Clean Open Graded Reservoir Course (Sub Base) must not be compacted or permanently covered with geotextile, unless otherwise shown on the Contract Drawings or directed by the Engineer.

(2) Prepared subgrades must not be subject to construction equipment traffic.

(3) Where erosion has caused accumulation of sediment or ponding on the subgrade, remove sediment with light equipment and/or manually. Scarify the underlying soils to a minimum depth of 6 inches with a York type rake, or equivalent equipment.

(4) Restore any subgrade areas damaged by erosion, ponding, or traffic compaction to design line and grades prior to installation of storage reservoir course (layer).

(D) Installation of Reservoir Course (Sub base)

(1) The Reservoir Course Subbase will be installed per specification to the thicknesses and width shown on the contract drawings and as directed by Engineer.

(2) Place 1-1/2" (nominal) size open graded stone, over the prepared subgrade and spread and level evenly by raking to the dimensions shown on the contract drawing details. Do not disturb prepared subgrade or shift, wrinkle or fold the geotextile fabric and/or impermeable liner when and where place as shown on the Contract Drawings.

(3) The open graded stone reservoir course material must be spread in equal thickness layers. The spreading of any layer of this material must be done with spreader equipment approved by the Engineer, and to such thickness that the maximum depth of the layer, after compaction, will be 6 inches. Spreading from piles dumped on the roadway will not be permitted. No segregation of large or fine particles will be allowed, but the material, as spread, must be well graded, with no pockets of fine material. Water must be added in such amounts as the Engineer may consider necessary to obtain satisfactory compaction.

(4) Compact layers with an approved vibrating plate compactors or impact rammers until there is no visible movement, weaving or deflection in the surface of the clean open graded stone reservoir course. All the equipment must be approved by Engineer with regards to adjacent structures.

(5) The surface tolerance of the compacted clean open graded stone reservoir course must be + 3/4 in. under a 10-ft straightedge.

(6) The Contractor must assume full responsibility for any contamination and/or degradation of any part of this base during construction and must, at the Contractor's own expense, remove any and all portions of this base which do not conform to the requirements of these specifications and replace these portions with specified material.

(E) Installation of Open Graded Stone Base

(1) The Open Graded Stone Base will be installed per specification to the thicknesses and width shown on the contract drawings and as directed by Engineer.

(2) The Open Graded Stone Base must be placed in equal thickness layers. Prior to backfilling with Open Graded Stone Base the subgrade of the Green Infrastructure asset must be scarified to ensure no compaction. The placing of any layer of this material must be done so by gravity with no additional compaction to ensure the required void-ratio is maintained. No segregation of large or fine particles will be allowed, but the material, as placed, must be well graded, with no pockets of fine material.

(3) The Contractor must assume full responsibility for any contamination and/or degradation of any part of this base during construction and must, at the Contractor's own expense, remove any and all portions of this base which do not conform to the requirements of these specifications and replace these portions with specified material.

(F) Installation of Leveling Course (Screed Base Course)

Installation of all screed leveling courses with material specified above will be installed to the thicknesses and widths shown on contract drawings and Standard DEP GI Details.

Before installation of leveling course verify that the open graded stone base, as shown on the Contract Drawings, has been properly placed within the trench and compacted as approved and accepted by the Engineer.

In no case must a leveling course be less than three (3") inches thick for Precast Porous Panels and six (6") inches thick for pavers used in the roadway.

The cost of all leveling courses must be paid per the unit price herein.

GI-2.07.5 MEASUREMENTS

The quantity of CLEAN OPEN GRADED STONE to be measured for payment must be the number of CUBIC YARDS (CY) of open graded stone incorporated in the finished work, measured in place in cubic yards. The thickness of the leveling course must NOT be included in this measurement.

GI-2.07.6 PRICE TO COVER

The contract price bid per cubic yard of CLEAN OPEN GRADED STONE must cover the cost of all labor, materials, equipment, insurance, and necessary incidentals required to complete the work, including, but not limited to, excavating, furnishing, and laying open graded stone, subgrade preparation, compaction and furnishing and applying water; all in accordance with the Contract Drawings, the specifications, and the directions of the Engineer.

Payment for furnishing and installing GEOTEXTILE FABRIC FOR DRAINAGE will be made under Section. GI-2.09DR. Payment for furnishing and installing all open graded stone will be made under Item No. GI-2.07A through GI-2.07D.

Payment will be made under:

Item No.	Item	Pay Unit
GI-2.07A	3/8" CLEAN OPEN GRADED STONE (Type A)	C.Y.
GI-2.07B1	3/4" CLEAN OPEN GRADED STONE (Type B1)	C.Y.
GI-2.07B2	¾"- ½" CLEAN OPEN GRADED STONE (Type B2)	C.Y.
GI-2.07C	1-1/2" CLEAN OPEN GRADED STONE (Type C)	C.Y.
GI-2.07D	3"-4" CLEAN OPEN GRADED STONE (Type D)	C.Y.

SECTION GI-2.08 — HDPE BARRIER

GI-2.08.1 INTENT

This section describes the HDPE BARRIER. The purpose of the High Density Polyethylene (HDPE) Barrier is to provide an impermeable layer which does not allow water to pass through it. The HDPE barrier must be furnished and installed as specified herein in accordance with the NYC Department of Environmental Protection Standard Design and Guidelines for Green Infrastructure Practices drawings and as directed by the Engineer.

GI-2.08.2 MATERIALS

The HDPE barrier must consist of High Density Polyethylene (HDPE) Geomembrane sheets not less than 80 mil thickness, meeting or exceeding Geosynthetic Research Institute (GRI) Test Method GM13.

GI-2.08.3 SUBMITTALS

(A) The Contractor, prior to the start of work, must submit to the Engineer for approval samples of the geomembrane in accordance with the requirements of Section 1.06.31 of the NYC Department of Transportation Standard Highway Specifications, and methods of splicing permitted at utility crossings when directed by the Engineer.

(B) Certified material test reports showing that the geomembrane meet the specified requirements must be submitted for each shipment and identified with specific lots prior to installing materials. Material test reports must meet the requirements of ASTM and GRI test method GRI GM 13.

(C) The manufacturer must submit certified test date to cover each shipment of the material.

GI-2.08.4 CHEMICAL AND PHYSICAL REQUIREMENTS

(A) HDPE geomembrane sheets supplied for the project must meet or exceed all required physical characteristics as defined below:

(1) HDPE Geomembrane - High quality, high density polyethylene (HDPE) geomembrane specially formulated with virgin formulated polyethylene.

(2) Thickness - Thickness must not be less than (minimum average) 80 mil, measured in accordance with ASTM D5199.

(3) Density - The Density must not be less than 59 lb./ft3, measured in accordance with ASTM D1505.

(4) Tear resistance - Tear resistance must not be less than 40 lb., measured in accordance with ASTM D1004.

(5) Puncture Resistance - Puncture Resistance must not be less than 100 lb., measured in accordance with ASTM D4833.

(6) The HDPE Barrier must be strong enough to resist both rot and insects.

GI-2.08.5 METHODS

(A) Delivery - Deliver materials to site in manufacturer's original, unopened packaging, with labels clearly identifying product name and manufacturer.

(B) Storage - Store materials in clean, dry area in accordance with manufacturer's instructions.

(C) Handling - Protect materials during handling and installation to prevent damage.

(D) Prior to the installation of the HDPE Barrier, the Contractor must excavate the Green Infrastructure practice area to the satisfaction of the Engineer.

(E) Install HDPE Barrier as indicated on the NYC Department of Environmental Protection Standard Design and Guidelines for Green Infrastructure Practices drawings.

(F) The HDPE Barrier must be placed in one piece directly on the vertical face of the excavation. No splicing will be permitted, except at utility crossings.

(G) No equipment, materials or machinery must be placed on or be transported over exposed HDPE Barrier.

(H) HDPE Barrier must be placed as shown on the plans and as directed by the Engineer. Care must be taken in the placement of backfill under other items so as to prevent dislocation of the HDPE Barrier. If the HDPE Barrier is ruptured during installation, the rupture must be covered with a patch of new HDPE Barrier that will overlap the undamaged area by at least twelve (12") inches in all directions and to be sealed with watertight sealant. No additional payment will be made for the repair.

GI-2.08.6 MEASUREMENT

The quantity of HDPE Barrier to be measured for payment must be the number of square feet of geomembrane installed at the site to the satisfaction of the Engineer. Measurement must be made to the nearest square foot installed at each green infrastructure practice.

GI-2.08.7 PRICE TO COVER

The contract price for HDPE Barrier must be a unit price bid per square foot and must cover the cost of all labor, material, equipment, insurance, and incidentals necessary to furnish, handle, store, and install HDPE Barrier sheets, including, but not limited to excavation, sheeting and bracing, cutting holes in the sheets for utilities, furnishing and installing stainless steel anchor bars and fastenings at the top of the sheet and caulking bead along the top seam of the HDPE membrane and the concrete curb or header; all in accordance with the Contract Drawings, the specifications and the directions of the Engineer.

Payment will be made under:

Item No.	Item	Pay Unit
GI-2.08	HDPE BARRIER	S.F.

SECTION GI-2.08L — IMPERMEABLE LINER

GI-2.08L.1 INTENT

This section describes the IMPERMEABLE LINER also described as IMPERMEABLE MEMBRANE in the NYC Department of Environmental Protection Standard Design and Guidelines for Green Infrastructure Practices drawings. The purpose of the Impermeable Liner is to be utilized as a barrier in between the leveling course and the GI concrete element for Hydraulically Connected Right-of-Way Greenstrips and Right-of-Way Infiltration Basin green infrastructure practices. The Impermeable Liner must be furnished and installed as specified herein in accordance with the NYC Department of Environmental Protection Standard Design and Guidelines for Green Infrastructure Practices drawings and as directed by the Engineer.

GI-2.08L.2 MATERIALS

(A) The Impermeable Liner must be made of Polyvinyl Chloride (PVC) geomembrane of 10 mil thickness, meeting or exceeding the requirements of ASTM D7176 Standard Specification for PVC geomembranes used in buried applications.

(B) Each geomembrane liner roll must be wrapped with a material that will protect the liner, including the ends of the roll, from damage due to shipment, water, sunlight, and contaminants. The protective wrapping must be maintained during periods of shipment and storage in accordance to ASTM D4873 and ASTM D7865.

(C) During storage, geomembrane liner rolls must be elevated off the ground and adequately covered to protect them from the following: site construction damage, precipitation, extended ultraviolet radiation including sunlight, chemicals that are strong acids or strong bases, and any environmental condition that may damage the physical property values of the liner.

(D) If the geomembrane is damaged, the GEOSYNTHETICS CONTRACTOR must make all repairs and replacements in a timely manner, so as to prevent delays in the progress of the work

(E) The finished liner must be free of pinholes, blisters, and contaminants.

(F) Adhesive at field seams must be Environmental Protection, Inc. Bodied Solvent Adhesive HH-66 Vinyl Cement or engineer approved equal.

GI-2.08L.3 SUBMITTALS

(A) The Contractor, prior to the start of work, must submit to the Engineer for approval samples of the impermeable liner in accordance with the requirements of Section 1.06.31 of the NYC Department of Transportation Standard Highway Specifications, and methods of splicing permitted at utility crossings.

(B) Certified material test reports showing that the geomembrane meet the specified requirements must be submitted for each shipment and identified with specific lots prior to installing materials. Material test reports must meet the requirements of ASTM and GRI test method GRI GM 13.

(C) The data submitted must include, where applicable, manufacturer's descriptive literature and installation instructions.

GI-2.08L.4 METHODS

(A) Delivery - Deliver materials to site in manufacturer's original, unopened packaging, with labels clearly identifying product name and manufacturer.

(B) Storage - Store materials in clean, dry area in accordance with manufacturer's instructions.

(C) Handling - Protect materials during handling and installation to prevent damage.

(D) Contractor must verify that there are no sharp objects that may rupture the impermeable liner prior to installation. The impermeable liner must be installed in between the leveling course and open-graded stone base.

(E) The impermeable liner will be sized, cut and installed in accordance with the approved shop drawings and specifications. The impermeable liner will cover the entire footprint of which concrete is intended to be poured.

(F) The impermeable liner will cover the inner walls of the concrete header as well as the back side of the curb. The contractor is to ensure that cast-in-place concrete does not penetrate or bypass the impermeable liner.

(G) Excess liner trim will be cut flushed to the cast-in-place concrete surface.

GI-2.08L.5 MEASUREMENT

The quantity of Impermeable Liner to be measured for payment must be the number of square feet of liner installed at the site to the satisfaction of the Engineer. Measurement must be made to the nearest square foot installed at each green infrastructure practice.

GI-2.08L.6 PRICE TO COVER

The contract price for IMPERMEABLE LINER must be a unit price bid per SQUARE FOOT and must cover the cost of all labor, material, equipment, insurance, and incidentals necessary to furnish, handle, store, and install Impermeable Liner sheets, including, but not limited to, sheeting and bracing, cutting holes in the sheets for utilities, furnishing and installing stainless steel anchor bars and fastenings at the top of the sheet and caulking bead along the top seam of the impermeable liner and the concrete element; all in accordance with the Contract Drawings, the specifications and the directions of the Engineer.

Payment will be made under:

Item No.	Item	Pay Unit
GI-2.08L	IMPERMEABLE LINER	S.F.

SECTION GI-2.09DR — GEOTEXTILE FABRIC FOR DRAINAGE

GI-2.09DR.1 INTENT

This section describes geotextile fabric. The Contractor must furnish and install geotextile - drainage fabric as specified herein in accordance with the NYC Department of Environmental Protection Standard Design and Guidelines for Green Infrastructure Practices drawings and as directed by the Engineer.

GI-2.09DR.2 SUBMITTALS

(A) All submittals must be submitted prior to purchase and must be made in accordance with the requirements of the NYC Department of Transportation Standard Highway Specifications, General Conditions, Subsection 1.06.31.

(B) Samples: The Contractor must furnish two (2) labeled samples of the geotextiles intended for use in the work for approval and the Engineer's use. The label must include the manufacturer's product name, the type of fabric, and the weight of grade of the material. Geotextiles used in the work must conform to the approved samples.

(C) Certified laboratory test results meeting or exceeding the below criteria must be supplied with the submittal information.

GI-2.09DR.3 MATERIALS

(A) Chemical and Physical Requirements

(1) Drainage application is defined as a soil to geotextile system that allows for long-term, adequate liquid flow normal to the geotextile with limited soil loss across the plane of the geotextile.

(2) Minimum Average Roll Value (MARV): Property value calculated as typical minus two standard deviations. Statistically, it yields a 97.7 percent degree of confidence that any sample taken during quality assurance testing will exceed value reported. Typical Roll Value is represented by (TRV).

(3) Fibers used in the manufacture of drainage geotextiles, and super high-tenacity polypropylene yarns with a weave pattern to maximize strength, water flow, soil interaction and soil retention. The yarns used must consist of long-chain, synthetic polymers, composed of at least 95 percent by weight polyolefins, polyesters, or polyamides. They must be formed into a stable network such that the filaments or yarns retain their dimensional stability relative to each other, including selvages. The geotextile must have no tears or defects which adversely alter its physical properties.

Geotextiles used in drainage applications must conform to the following properties for Woven Geotextile Drainage:

Property	ASTM Test	Requirements
Structure		Woven
Flow Rate (Min. @ MARV)	ASTM D4491	2852 L/min/sm (70 gal/min/sf)
Tensile Strength @ 2% (Min.)	ASTM D4595	8.8 kN/m (600 LBS/ft)
Tensile @ 5% Strength (Min.)	ASTM D4595	23.6 kN/m (1620 LBS/ft)
Interaction Coefficient (Min.)	ASTM D6706	0.89
Permittivity (Min.)	ASTM D4491	0.9 /sec
Apparent Opening Size (Max.)	ASTM D4751	0.425 mm (0.0167 inch) Std. No. 40

Geotextiles used in drainage applications must conform to the following properties for Non-Woven Geotextile Drainage:

Property	ASTM Test	Requirements
Structure		Non-Woven
Elongation	ASTM D4595	> 50%
Grab Strength (Min.)	ASTM D4632	700N (157 LBS)
Tear Strength (Min.)	ASTM D4533	250N (56 LBS)
Puncture Strength (Min.)	ASTM D4833	250N (56 LBS)
Permittivity (Min.)	ASTM D4491	0.21 / sec.
Apparent Opening Size (Max.)	ASTM D4751	0.25 mm (0.0098 inch) Std. No. 60 sieve

(B) Brand

Geotextiles must be as manufactured by Terrafix, Inc., Toronto, ON; by Carthage Mills, Cincinnati, OH; by Mirafi, Inc., Charlotte, NC; or approved equivalent.

GI-2.09DR.4 CONSTRUCTION METHODS

(A) Each geotextile roll must be wrapped with an overlaying material that will protect the geotextile, including the ends of the roll, from damage due to shipment, water, sunlight, and contaminants. The protective wrapping must be maintained during periods of shipment and storage. During storage, geotextile rolls must be elevated off the ground

and adequately covered to protect them from the following: site construction damage, precipitation, extended ultraviolet radiation including sunlight, chemicals that are strong acids or strong bases, and any environmental condition that may damage the physical property values of the geotextile.

(B) PERMEABLE PAVEMENTS: Excavation must be made to dimensions sufficient to accommodate placement of the woven geotextile, clean open graded stone reservoir course material, geo-grid and pavement (leveling course with porous panels or permeable pavers). The overcut underlying soil must be removed from the excavation and the bottom must be compacted as required. The extra depth will be filled with clean open graded stone materials as required after installation of woven geotextile. No additional payment will be made for extra clean open graded stone used to compensate for overcut subbase. If applicable, Temporary Support should be provided for trench walls to prevent it collapse. The contractor must protect the pavement section at the saw cut line along the road side.

(C) PERMEABLE PAVEMENTS: Prior to installation of woven geotextile, the ground must be prepared by removing stumps and other organic material, along with any large boulders and sharp objects which may tear or damage the fabric. Install woven geotextile at elevations and alignments as indicated on the drawings or as directed by the Engineer. The drainage woven geotextile must be placed loosely with no wrinkles or folds. Overlap woven geotextile edges a minimum of 12 inches in the direction of drainage flow. Care will be taken to place the woven geotextile in intimate contact with the soil so that no void spaces occur between the woven geotextile and trench or ground. If the woven geotextile is damaged during installation, the rupture must be removed and the damaged area must be covered with a patch of new fabric which will overlap the undamaged fabric with twelve (12") inches in all directions. The Contractor must make such repair work as directed by Engineer at no extra cost to the City.

(D) GABION [WITH CLEAN OPEN GRADED STONE]: The non-woven geotextile fabric must be placed on the side where the gabion abuts both the existing soil under the roadway and the engineered soil and sand and open graded stone base; and on the top side of the gabion; the bottom of the gabion must have no non-woven geotextile drainage fabric. Prior to placement of the non-woven geotextile fabric, the area must be free of stumps and other organic material, along with any large boulders or sharp objects which may tear or damage the fabric. The drainage non-woven geotextile must be placed loosely with no wrinkles or folds. Overlap non-woven geotextile edges a minimum of 12 inches in the direction of drainage flow. If the non-woven geotextile is damaged during installation, the rupture must be removed and the damaged area must be covered with a patch of new fabric which will overlap the undamaged fabric with twelve (12") inches in all directions. The Contractor must make such repair work as directed by Engineer at no extra cost to the City.

(E) OPEN GRADED STONE BASE: The non-woven geotextile fabric must be placed on the sides of the open graded stone base, where it abuts either existing soil under the roadway or sidewalk and at the top of the open graded stone base where it abuts the engineered soil and sand. Prior to placement of the non-woven geotextile fabric, the area must be free of stumps and other organic material, along with any large boulders or sharp objects which may tear or damage the fabric. The drainage non-woven geotextile must be placed loosely with no wrinkles or folds. Overlap non-woven geotextile edges a minimum of 12 inches in the direction of drainage flow. Care will be taken to place the

non-woven geotextile in intimate contact with the soil so that no void spaces occur between the non-woven geotextile and trench or ground. If the non-woven geotextile is damaged during installation, the rupture must be removed and the damaged area must be covered with a patch of new fabric which will overlap the undamaged fabric with twelve (12") inches in all directions. The Contractor must make such repair work as directed by Engineer at no extra cost to the City.

Overlaying material must be placed within the same work shift whether the fabric is subject to damage from sunlight or not.

(F) STONE COLUMNS: The non-woven geotextile fabric must be placed on sides of the perforated PVC pipe where it abuts the select granular fill that is placed in the annular space during stone column installation. Prior to placement of the non-woven geotextile fabric, the area must be free of stumps and other organic material, along with any large boulders or sharp objects which may tear or damage the fabric. The drainage non-woven geotextile must be wrapped around the perforated PVC pipe prior to placing the non-woven geotextile wrapped perforated PVC pipe into the augured fourteen (14) inch diameter casing installed in the ground. Overlap non-woven geotextile edges a minimum of 12 inches in the direction of drainage flow. If the non-woven geotextile is damaged during installation, the rupture must be removed and the damaged area must be covered with a patch of new fabric which will overlap the undamaged fabric with twelve (12") inches in all directions. The Contractor must make such repair work as directed by Engineer at no extra cost to the City

(G) HDPE Piping: The non-woven geotextile fabric must be placed on sides of the perforated/slotted HDPE pipe where it abuts the engineered soil and sand. Prior to placement of the non-woven geotextile fabric, the area must be free of stumps and other organic material, along with any large boulders or sharp objects which may tear or damage the fabric. The drainage non-woven geotextile must be wrapped around the perforated/slotted HDPE pipe prior to placing the non-woven geotextile wrapped perforated/slotted HDPE pipe into the trench. Overlap non-woven geotextile edges a minimum of 12 inches in the direction of drainage flow. If the non-woven geotextile is damaged during installation, the rupture must be removed and the damaged area must be covered with a patch of new fabric which will overlap the undamaged fabric with twelve (12") inches in all directions. The Contractor must make such repair work as directed by Engineer at no extra cost to the City

GI-2.09DR.5 MANUFACTURER

(A) terrafix® Geosynthetics Inc. (Nonwoven only)
455 Horner Avenue
Toronto, ON
M8W 4W9
E-mail: info@terrafixgeo.com
Phone: (416) 674-0363
http://terrafixgeo.com/contact/

(B) Carthage Mills
4243 Hunt Road
Cincinnati, OH 45242

Phone: (513) 794-1600
https://carthagemills.com/

(C) TenCate Geosynthetics Americas (Mirafi)
365 South Holland Drive
Pendergrass, Georgia 30567
Tel: +1 706-693-2226
Email: spec@tencategeo.com
https://www.tencategeo.us/

GI-2.09DR.6 MEASUREMENT

The quantity of GEOTEXTILE FABRIC to be measured for payment must be the number of SQUARE YARDS actually installed at the site, in its final position, to the satisfaction of the Engineer. No quantity will be included for material used for repair of tears or for material used to provide the overlaps.

GI-2.09DR.7 PRICE TO COVER

The unit price bid per SQUARE YARD for GEOTEXTILE FABRIC must cover the cost of furnishing all labor, material, equipment, insurance, submittals, and incidental expenses required to complete the work; all in accordance with the Contract Drawings, the specifications and directions of the Engineer.

Payment for the following will be made under other contract items: Clean Open Graded Stone Base (GI-2.07A to GI-2.07D), Gabion with Clean Open Graded Stone (GI 2.17A) and Engineered Soil and Sand (GI-2.13A). Payment for furnishing and installing GEOTEXTILE FABRIC for STONE COLUMNS and HDPE PIPE will be made under item Stone Column (GI-5.10) and under items High Density Polyethylene (HDPE) Pipe (GI-2.16S, GI-2.16P, GI-2.16SA, GI-2.16FPA and GI-2.16HPA) respectively.

Payment will be made under:

Item No.	Item	Pay Unit
GI-2.09DR-NW	NON-WOVEN GEOTEXTILE FABRIC FOR DRAINAGE	S.Y.
GI-2.09DR-W	WOVEN GEOTEXTILE FABRIC FOR DRAINAGE	S.Y.

SECTION GI-2.10 — STEEL TREE GUARDS

GI-2.10.1. INTENT

This section describes steel tree guards. The Contractor must furnish and install Steel Tree Guards in accordance with the NYC Department of Environmental Protection Standard Design and Guidelines for Green Infrastructure Practices drawings and as directed by the Engineer.

GI-2.10.2. MATERIALS

Steel tree guards must conform to Specifications C1015 of the American Iron and Steel Institute (AISI) and must be of solid steel and not hollow in section.

Concrete must Type B-32 comply with the requirements of Sections 3.05 and 4.06 in the NYC Department of Transportation Standard Highway Specifications.

GI-2.10.3. SUBMITTALS

(A) The Contractor must submit for the approval of the Engineer finished samples of parts of the steel tree guards. The workmanship and finish of the final product must be equal to the approved samples. Also, the Contractor must submit detailed shop drawings of steel tree guards for the approval of the Engineer.

(B) Paint Substitution: A written request for paint substitution must be submitted to the Engineer for approval. Contractor must submit this request, along with manufacturer's data sheets for approval, a minimum of two weeks prior to the intended date of paint application. All paint substitutes must be approved in writing prior to use.

GI-2.10.4. CHEMICAL AND PHYSICAL REQUIREMENTS

Steel Tree Guards must be constructed of bars, posts, and rails of the sizes shown on the plans. All material must conform to Specifications C1015 of the AISI

GI-2.10.5. MATERIALS

All material for the steel tree guards must conform to Specifications C1015 of the AISI.

GI-2.10.6. CONSTRUCTION METHODS

(A) Steel Tree Guards must be fabricated in strict accordance with the plans and approved shop drawings. Posts, pickets, bars, and rails must be formed into panels of the shapes shown on the Contract Drawings. Joints must be completely welded with welds of proper size and shape. All welds must be ground smooth to a neat finish. Connections must be provided as indicated on the plans. Welding must conform to current industry requirements for this type of application.

(B) Steel spike must be concrete encased as shown on the plans or as per Standard Design and Guidelines for Green Infrastructure Practices

(C) Posts and pickets must, in all cases, be truly vertical as shown on the plans. Rails and bars must be parallel to grade as shown on the Contract Drawings. Panels must be curved as required by the work. Dimensions of individual steel tree guards may vary as required by existing site conditions, in accordance with the directions of the Engineer.

(D) Steel tree guards must receive three (3) shop applied coats of paint. A field applied touch-up coat must be applied at the discretion of the Engineer. Immediately prior to painting, all surfaces of framework must be thoroughly cleaned free of debris. All surfaces that are rust free must be treated in accordance with SP-1, Solvent Cleaning. Treatment must be performed with a solvent such as mineral spirits, xylol, or turpentine to remove all dirt, grease, and foreign matter. Surfaces that show evidence of scale and rust must be cleaned in accordance with SP-2, Hand Tool Cleaning, a method generally confined to wire brushes, sandpaper, hand scrapers, or hand impact tools or SP-3, Power Tool Cleaning, a method generally confined to power wire brushes, impact tools, power sanders, and grinders in order to achieve a sound substrate. After the steel tree guards have been cleaned and prepared, they must be painted as follows:

(1) First Coat (Shop Applied): Sherwin Williams # E41N1 Metal Primer, Brown, or approved equivalent. Primer is an alkyd oil, flat finish coating having a dry film thickness of 3 to 4 mils. Paint requires twenty-four (24) hours drying time before recoating. Performance must meet or exceed the standards of Federal Specification TT-P-86H.

(2) Second Coat (Shop Applied): Sherwin Williams High Solids Alkyd Metal Primer, B50 Series, Reddish Brown, or approved equivalent. Primer is an alkyd, low luster coating having a dry film thickness of 3-5 mils. Paint requires four (4) hours drying time before recoating (with alkyds)

(3) Third Coat (Shop Applied): Sherwin Williams Silicone Alkyd Low VOC B56Z Black, or approved equivalent. Topcoat is a silicon alkyd, high gloss coating having a dry film thickness of 2 -4 mils. Paint requires sixteen (16) hours drying time @ 45° F; eight (8) hours @ 77°F. (tack free)

Alternative paint manufacturers must be Devoe and Reynolds, Co.; Pratt and Lambert, Inc.; Pittsburgh Plate Glass Company; Sapolin; or an approved equivalent. All paints used must be compatible and the product of the same manufacturer.

(E) All paints must be applied when ambient air temperature is forty-five (45) degrees F. and rising and when surfaces to be painted are moisture free. No painting will be allowed below the minimum ambient air temperature. In addition, no painting will be allowed below the temperature at which moisture will condense on surfaces. Refer to the Dew Point Chart found at the end of section GI-2.10PC.6 to find the minimum allowed moisture free temperature.

(F) The steel tree guards must be erected in soil only, inside the tree pits. The posts must be set in place and properly supported to hold them to line and grade. The lowest portion of the steel band at the bottom of all side rails set 1" above the finished grade of the sidewalk. Any guards not set plumb and true to line and grade must be removed and replaced at the Contractor's expense.

GI-2.10.7. MEASUREMENT

The quantity of each type of STEEL TREE PIT GUARD to be measured for payment must be the number of LINEAR FEET of tree pit guards erected, complete, in place to the satisfaction of the Engineer, measured along the top rail.

GI-2.10.8. PRICES TO COVER

The unit price bid per LINEAR FOOT of each type of STEEL TREE PIT GUARD must cover the cost of all labor, material, equipment, insurance, and incidentals required to excavate, fabricate, furnish, install, and erect tree pit guards including, but not limited to, welding and painting, furnishing, placing and trimming the 6" diameter tube forms, and furnishing and placing concrete for encasement of the steel tree pit guard spikes; all in accordance with the Contract Drawings, the specifications and as directed by the Engineer.

Payment will be made under:

Item No.	Item	Pay Unit
GI-2.10A	STEEL TREE PIT GUARD - TYPE 'A'	L.F.
GI-2.10B	STEEL TREE PIT GUARD - TYPE 'B'	L.F.
GI-2.10C	STEEL TREE PIT GUARD - TYPE 'C'	L.F.
GI-2.10D	STEEL TREE PIT GUARD - TYPE 'D'	L.F.

SECTION GI-2.10PC — STEEL TREE GUARDS (POWDER COATED)

GI-2.10PC.1. INTENT

This section describes steel tree guards (powder coated). The Contractor must furnish and install Steel Tree Guards (Powder Coated) in accordance with the NYC Department of Environmental Protection Standard Design and Guidelines for Green Infrastructure Practices drawings and as directed by the Engineer.

GI-2.10PC.2. MATERIALS

Steel tree guards (powder coated) must conform to Specifications C1015 of the American Iron and Steel Institute (AISI) and must be of solid steel and not hollow in section.
Concrete must Class B-32, Type I/IA and comply with the requirements of Sections 3.05 and 4.06 in the NYC Department of Transportation Standard Highway Specifications.

GI-2.10PC.3. SUBMITTALS

(A) The Contractor must submit for the approval of the Engineer finished samples of parts of the steel tree guards (powder coated). The workmanship and finish of the final product must be equal to the approved samples. Also, the Contractor must submit detailed shop drawings of steel tree guards (powder coated) for the approval of the Engineer.

(B) All surfaces of the steel tree pit guard bars, posts, and rails must be powder coated with an electrostatically sprayed, lead-free, TGIC (triglycidyl isocynanurate) polyester powder coating applied to a minimum of 3 to 4 mils by electrostatic spray process and bake finished per the manufacturer's directions. Powder coating must be applied to the thermal zinc or iron phosphate coated metal in such a manner that the coating will not peel off. The manufacturer must perform all processes required to achieve a smooth material bond. Insure surfaces to be coated are clean and dry and free of grease, dust, rust, etc. All surfaces must first receive phosphating and chromatizing treatments to improve the adhesion of the surface coating.

Colors must be "black" unless otherwise shown on the drawings. Material surfaces must be protected during shipment so as to arrive mar and scratch free in the field.

GI-2.10PC.4. CHEMICAL AND PHYSICAL REQUIREMENTS

Steel Tree Guards (Powder Coated) must be constructed of bars, posts, and rails of the sizes shown on the NYC Department of Environmental Protection Standard Designs and Guidelines for Green Infrastructure Practices drawings. All material must conform to Specifications C1015 of the AISI

The TGIC polyester powder coating must be similar to Secural by Spraylat, Tiger Dry lac Series 49 as manufactured by Tiger Drylac U.S.A., Reading, PA, or approved equal and must comply with ASTM standards as follows:

PHYSICAL PROPERTIES	TEST METHODS	ACCEPTANCE CRITERIA
Adhesion cross hatching	D-3359B	5B (0% area removed)
Flexibility conical mandrel	D-522	Pass 3/8" mandrel
Pencil hardness	D-3363	Pencil hardness 2H minimum
Impact resistance	D-2794	140 inch pounds minimum
Overbake resistance- Adhesion	D-2454	5B
Overbake resistance- Hardness	D-2454	Pencil hardness 2H minimum
Overbake resistance- Direct Impact	D-2454	140 inch pounds minimum
Humidity resistance-250 hours	D-4585	No visible change to surface
Weatherability	D-822	No visible change to surface

GI-2.10PC.5. MATERIALS

All material for the steel tree guards (powder coated) must conform to Specifications C1015 of the AISI.

GI-2.10PC.6. CONSTRUCTION METHODS

(A) Steel Tree Guards (Powder Coated) must be fabricated in strict accordance with the NYC Department of Environmental Protection Standard Designs and Guidelines for Green Infrastructure Practices drawings and approved shop drawings. Posts, pickets, bars, and rails must be formed into panels of the shapes shown on the Contract Drawings. Joints must be completely welded with welds of proper size and shape. All welds must be ground smooth to a neat finish. Connections must be provided as indicated on the plans. Welding must conform to current industry requirements for this type of application.

(B) Steel spike must be concrete encased as shown on the plans or as per Standard Design and Guidelines for Green Infrastructure Practices

(C) Posts and pickets must, in all cases, be truly vertical as shown on the plans. Rails and bars must be parallel to grade as shown on the Contract Drawings. Panels must be curved as required by the work. Dimensions of individual steel tree guards (powder coated) may vary as required by existing site conditions, in accordance with the directions of the Engineer.

(D) The powder coating must be applied without voids, tears or cuts that reveal the substrate and must thoroughly adhere to the metal without peeling when scratched with a pick device or knife blade point. All visible nuts, washers, and ends of all bolts must be painted with touch-up paint as described below.

Touch-up and Repair: For minor damage caused by installation or transportation, touch-up finish in conformance with manufacturer's recommendations. Provide touch-up such that repair is not visible from a distance of six (6') feet.

Laboratory Test for TGIC-Polyester Powder coat: At the discretion of the Engineer, a sample TGICPolyester powder coated metal bar may be laboratory tested for bonding of the powder coating to the metal. Test must be the Cross Hatch test per ASTM D3359, method B. Failure to satisfactorily pass this test must be a basis for rejection

(E) The steel tree guards (powder coated) must be erected in soil only, inside the tree pits. The posts must be set in place and properly supported to hold them to line and grade. The lowest portion of the steel band at the bottom of all side rails set 1" above the finished grade of the sidewalk. Any guards not set plumb and true to line and grade must be removed and replaced at the Contractor's expense.

DEW POINT CALCULATION CHART

Dew Point: The temperature at which moisture will condense on a surface. No coatings should be applied unless the surface temperature is a **minimum of 5ºF** above this point.

Example: If the air temperature is 70ºF and the relative humidity is 65%, the dew point is 57ºF. No coating should be applied unless surface temperature is 62ºF minimum.

Ambient Air Temperature (Fahrenheit)

Relative Humidity	20°F	30°F	40°F	50°F	60°F	70°F	80°F	90°F	100°F	110°F	120°F
90%	18	28	37	47	57	67	77	87	97	107	117
85%	17	26	36	45	55	65	84	84	95	104	113
80%	16	25	34	44	54	63	82	82	93	102	110
75%	15	24	33	42	52	62	80	80	91	100	108
70%	13	22	31	40	50	60	78	78	88	96	105
65%	12	20	29	38	47	57	76	76	85	93	103
60%	11	19	27	36	45	55	73	73	83	92	101
55%	9	17	25	34	43	53	70	70	80	89	98
50%	6	15	23	31	40	50	67	67	77	86	94
45%	4	13	21	29	37	47	64	64	73	82	91
40%	1	11	18	26	35	43	61	61	69	78	87
35%	-2	8	16	23	31	40	57	57	65	74	83
30%	-6	4	13	20	28	36	52	52	61	69	77

Surface temperature at which condensation occurs

GI-2.10PC.7. MEASUREMENT

The quantity of each type of STEEL TREE GUARD (POWDER COATED) to be measured for payment must be the number of LINEAR FEET of tree pit guards erected, complete, in place to the satisfaction of the Engineer, measured along the top rail.

GI-2.10PC.8. PRICES TO COVER

The unit price bid per LINEAR FOOT of each type of STEEL TREE GUARD (POWDER COATED) must cover the cost of all labor, material, equipment, insurance, and incidentals required to fabricate, furnish and erect tree pit guards including, but not limited to, welding and painting, furnishing, placing and trimming the 6" diameter tube forms, excavating, and furnishing and placing concrete for encasement of the steel tree pit guard spikes; all in accordance with the Contract Drawings, the specifications and as directed by the Engineer.

Payment will be made under:

Item No.	Item	Pay Unit
GI-2.10PC-A	STEEL TREE PIT GUARD - POWDER COATED – TYPE 'A'	L.F.
GI-2.10PC-B	STEEL TREE PIT GUARD - POWDER COATED – TYPE 'B'	L.F.
GI-2.10PC-C	STEEL TREE PIT GUARD - POWDER COATED – TYPE 'C'	L.F.
GI-2.10PC-D	STEEL TREE PIT GUARD - POWDER COATED – TYPE 'D'	L.F.

SECTION GI-2.13A — ENGINEERED SOIL AND SAND

GI-2.13A.1 INTENT

This section describes Engineered Soil and Sand. The Contractor must furnish, amend (if required), place and prepare the Engineered Soil and Sand for seeding and/or plant material as specified herein in accordance with the NYC Department of Environmental Protection Standard Design and Guidelines for Green Infrastructure Practices drawings and as directed by the Engineer.

GI-2.13A.2 MATERIALS

Engineered Soil and Sand must conform to the following standards:

(A) Recommended Soil Testing Procedures for The Northeastern United States, 3rd Edition, Northeast Regional Publication, Agricultural Experiment Station, University of Delaware. Bulletin #493, Revised July 2011 or latest.

(B) USDA Soil Survey Laboratory Methods Manual, Soil Survey Investigations Report No. 42 Version 5.0, Issued 2014.

GI-2.13A.3 SUBMITTALS

(A) Prior to the procurement of Engineered Soil and Sand, the following information and samples for each source must be submitted to the Engineer for review and approval:

(1) Proposed material source and vendor.

(2) A sample of the proposed material, in presence of the Engineer, indicating the method of sampling and location of the sample.

(3) The Contractor must submit to the Engineer the name and location of the borrow (source) or stockpile site(s) and the estimated quantity of material available. The Contractor must provide a notarized letter from the owner(s) of the proposed borrow site and/or stockpile site(s) indicating ownership of the proposed site(s) and a commitment to supply a specified minimum quantity of material for the project. Additionally, the supplier must provide a certificate of clean fill and/or source materials for topsoil, signed by a NYS licensed PE/RLA or RA. To avoid delays in planting and seeding, the Contractor must immediately begin to secure and test Engineered Soil and Sand at least one month in advance of the material actually being needed on site. This will allow sufficient time to blend the specified soil mix and make all the necessary adjustments in the mixing process.

(4) Loss-on-ignition and results of the organic content analyses conducted in accordance with the referenced standard, *Recommended Soil Testing Procedures for The Northeastern United States, 3rd Edition, Northeast Regional Publication, Agricultural Experiment Station, University of Delaware. Bulletin #493, Revised July 2011* or latest.

(5) Results of the USCS soil texture gradation (gravel, sand, silt and clay) analyses and sand sieve analyses, with full reporting of all information in AASHTO sieve sizes, in accordance with the *AASHTO T 27 Sieve Analysis of Fine and Coarse Aggregates and ASTM D2487 Standard Practice for Classification of Soils for Engineering Purposes (Unified Soil Classification System)*

(6) Results of the pH tests conducted in accordance with the following referenced standard, *USDA Soil Survey Laboratory Methods Manual, Soil Survey Investigations Report No. 42 Version 5.0 Issued 2014.*

(7) Results of the soluble salts test conducted in accordance with the above referenced standard, *Recommended Soil Testing Procedures for The Northeastern United States, 3rd Edition, Northeast Regional Publication, Agricultural Experiment Station, University of Delaware. Bulletin #493, Revised July 2011* or latest.

(8) Results of the Nutrient analyses test conducted in accordance with the above referenced standard, *Recommended Soil Testing Procedures for The Northeastern United States, 3rd Edition, Northeast Regional Publication, Agricultural Experiment Station, University of Delaware. Bulletin #493, Revised July 2011* or latest.

(9) Results of the Inorganic nitrogen and total Kjeldahl nitrogen tests conducted in accordance with the above referenced standard, *USDA Soil Survey Laboratory Methods Manual, Soil Survey Investigations Report No. 42 Version 5.0, Issued 2014.*

(10) Results of the acid-producing (iron sulfide) test conducted in accordance with the methodologies utilized by the *USDA Soil Survey Laboratory Methods Manual, Soil Survey Investigations Report No. 42 Version 5.0, Issued 2014.*

NOTE: Due to the agricultural nature of some of the Quality Control testing the Contractor is notified that both Rutgers University and Cornell University can perform nearly all agricultural testing required, one exception may be the acid-producing test. Turnaround times for results may vary from standard soils testing. However, all agricultural testing procedures must be performed in accordance with the above referenced standards and the *USDA Soil Survey Laboratory Methods Manual (No. 42, 2014) AASHTO T 27 Sieve Analysis of Fine and Coarse Aggregates and the Recommended Soil Testing Procedures for The Northeastern United States, 3rd Edition, Northeast Regional Publication, Agricultural Experiment Station, University of Delaware. Bulletin #493, Revised July 2011* or latest. If another lab is proposed, the Contractor can submit written certification from the proposed lab certifying that the lab will utilize the same methodologies for soil testing as outlined in these specifications. Approval of the laboratory for Contractor's Quality Control testing will be by the Engineer.

(B) As delivery of Engineered Soil and Sand to the site progresses, additional testing must be conducted by the Contractor on the Engineered Soil and Sand brought to the site. Frequency of testing is one for every 50 CY delivered. Results of tests must be submitted to Engineer for review and approval, as noted in Section GI-2.13A.3. A

(C) The Contractor must submit to Engineer the materials and procedures for amending soil, if appropriate. Amendment of soil is only permitted to meet the nutrient and organic requirements of the specifications. Nutrient modifications are only permitted through the use of the approved contract specified non-toxic organic fertilizer and the organic amendment permitted is leaf compost, no other organic amendment is permitted.

(D) The Contractor must submit quantity records on a weekly basis to Engineer.

(E) Material failing the frequency testing must not be incorporated into the work and must be removed from the site at the Contractor expense.

GI-2.13A.4 CHEMICAL AND PHYSICAL REQUIREMENTS

(A) Engineered Soil and Sand is an integral part of the Green Infrastructure System; as such, certification of its material properties is subject to the testing protocols of the Contractor's Quality Control (QC) plan and quality assurance testing by New York City Department of Design and Construction's Quality Assurance and Construction Safety (QACS) Bureau. The QC requirements relative to Engineered Soil and Sand are detailed below. **The Contractor must strictly comply with all requirements of its QC plan**. Sufficient lead time is required to develop an appropriate plan for mixing methodologies and ratios that will provide reliable results to meet the parameters listed below.

(B) Engineered Soil and Sand must be predominately sand (80-85% sand) as classified by the Unified Soil Classification System (USCS). Based on test results, a determination will be made to ensure that the sand fraction analysis results are capable of supporting proposed vegetation. Engineered Soil and Sand must be free of refuse, hard clods, woody vegetation, stiff clay, construction debris (of any kind), boulders, stones larger than 1-1/2 inches, chemicals, or other deleterious material toxic to any vegetation used on the project.

(C) Engineered Soil and Sand must have a minimum organic content of 3.0 percent and a maximum of 6.0 percent. If the source soil requires amendment to meet the Engineered Soil and Sand organic content requirement, leaf compost will be the only approved admixture. No soil mixing must be permitted during or after Engineered Soil and Sand placement. Engineered Soil and Sand must be tested for compliance with Contract specifications and submitted for approval prior to delivery to the site.

(D) The organic content of soils must be determined by a laboratory using the loss on ignition method as described in the *Recommended Soil Testing Procedures for The Northeastern United States, 3rd Edition, Northeast Regional Publication, Agricultural Experiment Station, University of Delaware. Bulletin #493, Revised July 2011* or latest.

(E) The gradation of Engineered Soil and Sand must be determined by a laboratory using the methods of the *ASTM D2487 Standard Practice for Classification of Soils for Engineering Purposes (Unified Soil Classification System).* The gradation of the Engineered Soil and Sand as determined by USCS classifications must be within the following ranges:

Ranges:
- 0-8% gravel
- 80-85% sand *of which:*
  - 0-5% coarse sand
  - 55-75% medium sand
  - 20-40% fine sand
- 5-10% silt
- 3-8% clay

(F) The pH value of Engineered Soil and Sand must be 5-7.0 as determined by an approved laboratory using soil pH (Water (1:1. V:V)) procedures as described in the *USDA Soil Survey Laboratory Methods Manual, Soil Survey Investigations Report No. 42 Version 5.0, Issued 2014.* Amendment of soil to lower pH to meet Contract requirements is not permitted.

(G) The soluble salt value of the Engineered Soil and Sand must be (0-.4mmhos cm-1) as determined by an approved laboratory using the soluble salt (1:2(V:V)) procedures as described in the *Recommended Soil Testing Procedures for The Northeastern United States, 3rd Edition, Northeast Regional Publication, Agricultural Experiment Station, University of Delaware, Bulletin #493, Revised July 2011* or latest.

(H) The value for Kjeldahl Nitrogen must be as outlined below as determined by an approved laboratory using the *USDA Soil Survey Laboratory Methods Manual, Soil Survey Investigations Report No. 42 Version 5.0, Issued 2014.*

Kjeldahl N Acceptable range is 0.06% to 0.25% (with nitrate (NO-3) form of nitrogen not to exceed 20 ppm).

(I) The value for Macro (P, K) Nutrients must be determined by an approved laboratory using the procedures as described in the *Recommended Soil Testing Procedures for The Northeastern United States, 3rd Edition, Northeast Regional Publication, Agricultural Experiment Station, University of Delaware, Bulletin #493, Revised July 2011* or latest. Ideal values for macro nutrients must fall within the ranges indicated below:

P	80 lbs/acre to 100 lbs/acre
K	100 lbs/acre to 300 lbs/acre

The value for Micro Nutrients (Mg, Ca, Mn, Zn, Cu and B) must be determined by an approved laboratory using the procedures as described in the *Recommended Soil Testing Procedures for The Northeastern United States, 3rd Edition, Northeast Regional Publication, Agricultural Experiment Station, University of Delaware, Bulletin #493, Revised July 2011* or latest. Micro Nutrient values and the determination of their compliance with accepted industry standards must fall on the discretion of the Engineer. Test reports for Micro Nutrients must be approved in writing by the Engineer prior to delivery of any soil to the work site.

(J) An acid-producing soil test is required to determine the potential for decreases in soil pH after oxidation. The pH value of the solution must be greater than 4.5 as determined by the *USDA Soil Survey Laboratory Methods Manual, Soil Survey Investigations Report No. 42 Version 5.0, Issued 2014.*

(K) The Engineered Soil and Sand mix must not contain any traces of hydrocarbons, petroleum products, chemically prohibited substances or any other elements considered to be toxic to any vegetation used on the Project. It must not smell of petroleum or give off other unnatural or toxic odors. The Engineer must check for discoloration and evidence of unacceptable contents. Regardless of prior acceptance of sample material should the Engineered Soil and Sand delivered to the site seem suspicious in any way; the Engineer must reject the material and the Contractor must immediately remove the material off the project site at no additional cost to the City.

The NYSDEC Guidance Values are known as "Recommended Soil Cleanup Objectives" or "Appendix A" (Revised 1/24/94), and consist of Table 1 for V.O.C.'s, Table 2 for Semi-V.O.C.'s, Table 3 for Organic Pesticides/Herbicides and P.C.B.'s, and Table 4 for Heavy Metal. Final values must be determined by either a health-based level, or a concentration necessary to protect groundwater quality, whichever is lower. If the Engineered Soil and Sand has already been placed in-situ, the Contractor must be responsible for:

(1) Removal and legal disposal of unacceptable fill;

(2) Replacement with acceptable fill; and,

(3) All other expenses, as well as potential fines that may be incurred.

(L) SAND must consist of sand, free of organic material, loam, debris, frozen soil or other deleterious material which may be compressible. The sand must be of uniform quality, friable, free from hard clods, stiff clay, hard pan, partially disintegrated stone, stones, lime, cement, ashes, slag, concrete, tar residues, tarred paper, gasoline, motor oil, or other petroleum hydrocarbons, boards, brush, weeds, stalks, roots, sods, chips, sticks or any other undesirable material. Invasive, nonnative seed must not be allowed in the clean sand material.

Clean sand should conform to the following gradation requirements:
U.S. Standard Sieve Size No. 8, with Percent Passing by Weight: 100%

GI-2.13A.5 CONSTRUCTION METHODS

(A) Prior to procurement and starting delivery of Engineered Soil and Sand, all approvals for those items required in Section GI-2.13A.3 entitled "SUBMITTALS" must have been given in writing to and accepted by the Engineer.

(B) Prior to the placement of Engineered Soil and Sand, the preparation of the subgrade must be accepted by the Engineer. Engineered Soil and Sand must be evenly placed to the thickness and configuration as directed by the Engineer or as shown on the plans. Engineered Soil and Sand must not be placed when the subgrade or Engineered Soil and Sand is frozen, excessively wet, extremely dry, or in a condition otherwise detrimental to the proposed seeding, planting or soil structure.

(C) Engineered Soil and Sand must be placed by gravity with no additional compaction and no use of mechanical equipment. After Engineered Soil and Sand placement and initial grading, the Green Infrastructure will be fully saturated, allowed to drain down and then fully saturated again. Then more Engineered Soil and Sand will be placed as necessary to bring to final grade. After final grading, no heavy equipment, pickup trucks, or other construction vehicles will be permitted to travel on these completed areas. The Contractor must, through hand grading with rakes and shovels, grade all areas around fences, pipes and other structures in preparation for seeding or planting.

(D) The Contractor must, as part of the Engineered Soil and Sand spreading operation, mechanically rake and clean all undesirable materials from the Engineered Soil and Sand prior to planting operations. The Contractor must dispose of all undesirable materials from the Engineered Soil and Sand.

(E) The Contractor must pay all costs, fees, etc. to rectify any deficiencies in placement of the Engineered Soil and Sand layer, to the acceptance of the Engineer.

GI-2.13A.6 MEASUREMENT

The quantity of Engineered Soil and Sand to be measured for payment under this item must be the number of cubic yards of Engineered Soil and Sand actually incorporated in the finished work, measured in trucks used for delivery at the proposed site(s), in accordance with the plans and specifications, and to the satisfaction of the Engineer.

GI-2.13A.7 PRICE TO COVER

Payment per cubic yard of Engineered Soil and Sand must cover the cost of all labor, materials, plant, equipment, insurance, and incidentals required to furnish and incorporate the Engineered Soil and Sand in full compliance with the requirements of the specifications and must include, but not limited to, testing of materials and furnishing such samples for testing as may be required, all in accordance with the plans, the specifications, and directions of the Engineer.

Payment will be made under:

Item No.	Item	Pay Unit
GI-2.13A	ENGINEERED SOIL AND SAND	C.Y.

SECTION GI-2.16 — HIGH DENSITY POLYETHYLENE (HDPE) PIPE

GI-2.16.1 INTENT

This section describes High Density Polyethylene (HDPE) pipe, fittings, flanges, unions, couplings, as specified in the NYC Department of Environmental Protection Standard Design and Guidelines for Green Infrastructure Practices drawings, or as required for a complete installation. Furnish and install all HDPE pipe and fittings in accordance with the specifications, the manufacturers' recommendations, and as directed by the Engineer.

GI-2.16.2 REFERENCES

(A) HDPE pipe must conform to the latest standards of the American National Standards Institute (ANSI), the American Society for Testing and Materials (ASTM), the American Water Works Association (AWWA) and the National Sanitation Foundation (NSF).

(B) HDPE pipe and fittings must conform to the following ASTM and AASHTO standards:

(1) ASTM D3212 - Standard Specification for Joints for Drain and Sewer Plastic Pipes Using Flexible Elastomeric Seals

(2) ASTM D3350 - Standard Specification for Polyethylene Plastics Pipe and Fittings Materials

(3) AASHTO M 252 - Standard Specification for Corrugated Polyethylene Drainage Pipe

(4) ASTM D1248 - Standard Specification for Polyethylene Plastics Extrusion Materials for Wire and Cable

(5) ASTM D7001 - Standard Specification for Geocomposites for Pavement Edge Drains and other High-Flow Applications

(6) ASTM D2321 - Standard Practice for Underground Installation of Thermoplastic Pipe for Sewers and Other Gravity-Flow Applications

GI-2.16.3 SUBMITTALS

Submit catalog data for pipe, couplings, and other appurtenances.

GI-2.16.4 CHEMICAL AND PHYSICAL REQUIREMENTS

(A) The pipe must be as uniform as commercially practicable in color, capacity, density, and other physical properties.

(B) The pipe must be manufactured from high density polyethylene resin in accordance with ASTM D3350 and PPI TR4. The pipe must conform to cell classification PE424420C for PE42 under ASTM D 3350. The pipe material must conform to the following cell classification requirements:

Property	Value	ASTM Test Procedure Designation
Density	0.955 gm/cm^3	D 1505
Melt Flow Index	1.0	D 1238
Flexural Modulus	80,000 psi	D 790
Tensile Strength @ Yield	3,200 psi	D 638
ESCR	Max Failure = 50%	D1693
Hydraulic Design Basis	Not Pressure Rated	D 2837
UV Stabilizer	C, Black with 2-3% carbon black	D 3350

(C) The pipe must contain no recycled materials or compounds.

(D) HDPE pipe must be marked either continuously or on intervals not to exceed five (5) feet by indirect printing with the following information:

(1) Name and/or trademark of the manufacturer.

(2) Nominal pipe size.

(3) Dimension Ratio (DR).

(4) The letters PE followed by the polyethylene grade per ASTM D 1248, followed by the Hydrostatic Design Basis.

(5) Manufacturing Standard Reference.

(6) Production Code from which time and date of manufacture can be determined.

(E) Visible defects, such as cracks, creases, crazing, non-uniformly pigmented areas or undispersed raw materials must not be acceptable and will result in rejection of the pipe by the Engineer.

(F) HDPE fittings must be manufactured to the requirements of ASTM D 3212 and this Specification. Fabricated fittings must be pressure rated to match the system piping.

GI-2.16.5 MANUFACTURERS

(A) Advanced Drainage Systems, Inc. (ADS)
4640 Trueman Blvd. Hilliard, OH 43026
1-800-821-6710
http://www.ads-pipe.com

(B) Hancor, Inc.
12370 Jacksontown Rd. #172
Findlay, OH 45840
1-888-367-7473
http://www.hancor.com

(C) LANE Enterprises, Inc.
3905 Hartzdale Drive, Suite 514
Camp Hill, PA 17011
717-761-8175
www.lane-enterprises.com

(D) Or Approved Equivalent.

GI-2.16.6 CONSTRUCTION METHODS

(A) Utilize care when lowering unit into the trench. Handle using nylon slings and two pick points.

(B) When the unit consists of two sections, place the downstream section first. Properly lube the bell and spigot to connect and home the remaining section.

(C) All connections to stormwater manholes, stormwater inlets, junctions, and/or inlets should be grouted and water/soil tight.

(D) Only use couplings to join standard lengths of pipe and as required to complete a straight run of pipe. Do not use couplings to join random lengths of pipe and cuttings from standard lengths.

(E) Use reducing fittings for all changes in pipe size. Do not use bushings.

(F) During construction, keep the lines free from foreign matter. The piping must be left thoroughly clean to the satisfaction of the Engineer.

GI-2.16.7 MEASUREMENT

The quantities to be measured for payment under these Items must be the number of linear feet (installed length) of each type HDPE PIPE actually placed in their final position, to the satisfaction of the Engineer, measured horizontally or vertically along the centerline of pipe and fittings as installed.

GI-2.16.8 PRICES TO COVER

The price bid for each type of HDPE PIPE must be a unit price per linear foot and must cover the cost of all labor, materials, equipment, insurance, and incidentals necessary to complete the work of furnishing and installing HDPE Pipe of all types (solid, including single wall & dual wall, and perforated, also referenced to as slotted, etc.), including, but not limited to, excavating, furnishing and installing fittings, flanges, unions, couplings, end caps, sand, and cleanouts including covers, and excavation, connecting and joining pipe to other pipes or drainage structures; and furnishing and wrapping geotextile fabric for drainage around perforated/slotted HDPE pipe; all in accordance with the Contract Drawings, the specifications and directions of the Engineer.

Payment will be made under:

Item No.	Item	Pay Unit
GI-2.16S	SOLID HDPE PIPE (6" DIA.)	L.F.
GI-2.16P	PERFORATED HDPE PIPE (6" DIA.)	L.F.
GI-2.16FPA	FULL PERFORATED HDPE PIPE (8" DIA.)	L.F.
GI-2.16HPA	HALF-PERFORATED HDPE PIPE (8" DIA.)	L.F.
GI-2.16SA	SOLID HDPE PIPE (8" DIA.)	L.F.

SECTION GI-2.17A — GABION (WITH CLEAN OPEN GRADED STONE)

GI-2.17A.1 INTENT

This section describes gabions (with clean open graded stone) also described as stone gabions in the NYC Department of Environmental Protection Standard Design and Guidelines for Green Infrastructure Practices drawings. Gabions (with clean open graded stone) must be installed where required, as specified herein in accordance with the Standard Design and Guidelines for Green Infrastructure Practices drawings and as directed by the Engineer.

GI-2.17A.2 MATERIALS

(A) A gabion is a wire mesh container filled with stone at the project site to form a stable stone basket. The gabion must have the shape and dimensions as shown on the Contract Drawings and as directed by the Engineer. Wire mesh must conform to ASTM A975 standards for PVC coated gabions and openings must be of the necessary size to contain the clean open graded stone.

(B) The wire mesh must be non-raveling mesh made of twisting continuous pairs of wires to form hexagonal shaped openings which are interconnected to adjacent wires. The wire mesh must be of sufficient strength to hold the open graded stone in place, and rigid enough to hold the shape as shown on the contract drawings. The wire must be coated with PVC and must be free from any cracks or breaks after the fabrication of the mesh. Fasteners used to assemble and interconnect the individual units must be made of stainless steel.

(C) The clean open graded stones for the gabion must meet the specifications of GI-2.07 3" – 4" Clean Open Graded Stone.

GI-2.17A.3 CONSTRUCTION METHODS

(A) Gabions must be filled with clean open graded stone on site and installed as per the NYC Department of Environmental Protection Standard Design and Guidelines for Green Infrastructure Practices drawings, Contract Drawings, and as directed by the Engineer.

(B) Gabions must be supplied, as specified in the contract drawings, in various lengths and heights. All gabions furnished by a manufacturer must be uniform width. Dimensions for height, lengths and widths are subject to a tolerance limit of +/- 5% of manufacturer's stated sizes.

(C) Gabions must be fabricated in such a manner that the front, back, sides, ends, lid and diaphragms can be assembled at the construction site into a rectangular basket of the specified sizes. Gabions must be of single-unit construction. The base, lid, ends, front and back must be either woven into a single unit or one edge of these members connected to the base section of the gabion in such a manner that strength and flexibility at the point of connection is at least equal to that of the mesh.

(D) The gabion must be furnished with the necessary diaphragms secured in proper position on the base in such a manner that no additional tying at this juncture will be necessary. All perimeter edges of the mesh forming the gabion must be securely

selvedge so that the joints formed by tying the selvedges have at least the same strength as the body of the mesh.

GI-2.17A.4 MEASUREMENT

The quantity to be measured for payment must be the cubic yards of Gabions actually installed at the site filled with clean open graded stone, to the satisfaction of the Engineer.

GI-2.17A.5 PRICE TO COVER

The contract price bid must be a unit price per CUBIC YARD of GABION (WITH CLEAN OPEN GRADED STONE) and must cover the cost of all labor, materials, equipment, insurance, and incidentals necessary to complete the work including, but not limited to, furnishing and placing stones within the gabion cage, and tying the gabion lid in place; all in accordance with the Contract Drawings, the specifications and the directions of the Engineer.

Payment for furnishing and wrapping GEOTEXTILE FABRIC FOR DRAINAGE around gabions will be made separately under item GI-2.09DR-NW, unless otherwise specified.

Payment will be made under:

Item No.	Item	Pay Unit
GI-2.17A	GABION (WITH CLEAN OPEN GRADED STONE)	C.Y.

SECTION GI-2.19 — HDPE STORMWATER CHAMBER

GI-2.19.1. INTENT

This section describes an STORMWATER CHAMBER. The purpose of the STORMWATER CHAMBER is to provide increased storm runoff detention capacity in a Right of Way Green Infrastructure practice.

The Contractor must furnish and install the stormwater chamber in accordance with the NYC Department of Environmental Protection Standard Design and Guidelines for Green Infrastructure Practices drawings, specifications, and directions of the Engineer.

GI-2.19.2. MATERIAL

The stormwater chamber will be manufactured with an open bottom and side walls, must be a corrugated product that is joined using an interlocking overlapping rib method. Connections must be fully shouldered overlapping ribs, having no separate couplings. Chambers will be arched in shape and manufactured with an open bottom. If approved by the manufacturer, the units may be trimmed to custom length. The stormwater chamber should conform to the dimensions as shown in the Contract Drawings and the NYC Department of Environmental Protection Standard Design and Guidelines for Green Infrastructure Practices drawings with placement on bedding and backfill as shown. The minimum acceptable storage volume with the stormwater chamber must be 2 cubic feet per linear foot.

For an HDPE stormwater chamber, it must be manufactured of high molecular weight high density polyethylene in an ISO-9001certified manufacturing facility and meet ASTM D 3350 Cell Class 324420C

GI-2.19.3. SUBMITTALS

The Contractor, prior to the start of work, must submit to the Engineer for approval catalog samples and cut sheets of the proposed material including certification that materials meet specified requirements and proposed dimensions of the Contract Drawings and NYC Department of Environmental Protection Standard Design and Guidelines for Green Infrastructure Practices drawings.

GI-2.19.4. CONSTRUCTION METHODS

(A) Delivery - Deliver materials to site in manufacturer's original, unopened packaging, with labels clearly identifying product name and manufacturer.

(B) Storage - Store materials in clean, dry area in accordance with manufacturer's instructions.

(C) Handling - Protect materials during handling and installation to prevent damage.

(D) Prior to the installation of the stormwater chamber, the Contractor must excavate the Green Infrastructure practice area as directed by the Engineer.

(E) Install stone base, stormwater chamber, and backfill as indicated on the NYC Department of Environmental Protection Standard Design and Guidelines for Green Infrastructure Practices drawings.

GI-2.19.5. MANUFACTURERS

(A) CULTEC Inc.
P.O. Box 280
878 Federal Rd.
Brookfield, CT 06804
203-775-4416
www.cultech.com

(B) Stormtech
StormTech LLC
20 Beaver Road, Suite 104
Wethersfield, CT 06109
PH: 860-529-8188
www.stormtech.com

(C) Infiltrator Water Technologies, LLC
4 Business Park Road
P.O. Box 768
Old Saybrook, CT 06475
www.infiltratorwater.com

(D) Or approved equivalent

GI-2.19.6. MEASUREMENT.

The quantity to be measured for payment must be the number of linear feet of the STORMWATER CHAMBER installed to the satisfaction of the Engineer, measured along the centerline of the chamber from end to end.

GI-2.19.7. PRICE TO COVER.

The contract price bid for the STORMWATER CHAMBER must be a unit price per linear foot and must cover the cost of all labor, material, equipment, insurance, and incidentals necessary to excavate, furnish, handle, store, and install a stormwater chamber within a Green Infrastructure practice, including, but not limited to, end caps, cutting holes in the sheets for utilities; all in accordance with the Contract Drawings, the specifications, manufacturers installation instructions, and the directions of the Engineer.

Clean open graded stone (GI-2.07D) where called for on the Contract Drawings, will be paid under their respective items, unless otherwise specified.

Payment will be made under:

Item No.	Item	Pay Unit
GI-2.19	HDPE STORMWATER CHAMBER	L.F.

SECTION GI-4.06 — GI CONCRETE ELEMENTS

GI-4.06.1 INTENT

This section describes the concrete elements associated with Green Infrastructure practice. The Contractor must install concrete as shown on the NYC Department of Environmental Protection Standard Design and Guidelines for Green Infrastructure Practices drawings. The GI Concrete Elements may be either Precast or Poured In Place.

GI-4.06.2 KIND

(A) Concrete elements must comply with the requirements of NYC Department of Transportation Standard Highway Specifications, Subsections 4.05.3, 4.05.4. and 4.05.5, and Section 4.14.

(B) Unless otherwise specified grout must be Cement Grout composed of neat cement and water and must comply with the requirements of Section 3.06 of the NYC Department of Transportation Standard Highway Specifications.

GI-4.06.3 PHYSICAL REQUIREMENTS

(A) The minimum acceptable average compressive strength of three samples is 5000 psi, with no individual less than 4500 psi. The maximum acceptable average freeze/thaw loss of five- block samples, subjected to 42 freeze/thaw cycles in a 3% NaCl solution, must not exceed 1.0%, with no individual sample exceeding 1.5%.

(B) Batching, mixing and placing of concrete must conform to ASTM C94 "Specification for Ready-Mix Concrete" and ACI 304 "Guide for Measuring, Mixing, Transporting and Placing Concrete". All materials must be pre-weighed prior to mixing. Concrete must obtain a minimum compressive strength of 5,000 psi at 28 days of age. Concrete must contain 6% entrained air by volume (plus or minus 1%).

(C) Fabrication and placement must conform to ACI-318 "Building Code Requirements for Structural Concrete and Commentary".

GI-4.06.4 METHODS

(A) All concrete elements must be furnished and installed as per the NYC Department of Environmental Protection Standard Design and Guidelines for Green Infrastructure Practices drawings. It must be designed and constructed to fit as shown in the plans, so that no gaps or hazards exist once the concrete is installed.

(B) All equipment and methods of construction must comply with the requirements of the NYC Department of Standard Highway Specifications, Subsections 4.05.4. and 4.05.5, and Section 4.14 with the following modifications and additions:

(1) For installations in existing pavement, the Contractor must be required to first full-depth saw cut and remove the pavement to the dimensions of the concrete elements shown on the Contract Drawings and directed by the Engineer. The Contractor must then backfill the excavated area to insure that the concrete element will be placed to its proper elevation with foundation material which must comply with the requirements of Subsection 4.05.2.(A) of the NYC Department of Transportation Standard Highway Specifications.

The earth subgrade, immediately before foundation material is placed on it, must be compacted to a minimum of 95 percent of Standard Proctor Maximum Density, smooth, parallel to and at the required depth below the finished concrete element surface and be dampened with water sufficient only to be absorbed by the subgrade. The subgrade must not be in a muddy or frozen condition and unsuitable material must be removed and replaced with acceptable material thoroughly compacted.

The foundation material must be placed on the prepared subgrade, in a manner to minimize segregation, using equipment and procedures approved by the Engineer. Uncontrolled spreading from piles dumped on the grade resulting in segregation will not be permitted. Foundation material must then be wetted to the optimum moisture content, based on a laboratory Proctor density test, and thoroughly compacted using an approved plate compactor. Compaction of foundation material must range between 90% and 95% of the Standard Proctor Maximum Density, as directed by the Engineer, depending upon material used. Unsatisfactory subgrade material must be removed and replaced with acceptable material thoroughly compacted to a minimum of 95% of Standard Proctor Maximum Density. The top surface of the foundation material must be parallel to the finished grade and at a distance below the grade equal to the specified thickness of concrete.

(2) Following the placing and spreading of concrete, it must be struck-off and finished to conform to the cross-sections shown on the Contract Drawings. The final finish must be made by brooming after the water sheen has disappeared as per the requirements for Bus Stop Pavements, Section 4.05.5.(K)(2) of the NYC Department of Transportation's Standard Highway Specifications.

(3) Contractor must furnish and install a welded wire fabric as per the NYC Department of Environmental Protection's Standard Design and Guidelines for Green Infrastructure Practices. The welded steel wire fabric must be laid in sheets which are straight and true to form and must be securely held in position by approved methods so that they will be in their prescribed position after the concrete has been placed.

(4) Where shown on the Contract Drawings, or where the Contractor opts to precast concrete elements, the precast concrete must be constructed in accordance with the following requirements:

Fabrication

a. Precast concrete elements must be fabricated to conform to the shapes and sizes shown on the Contract Drawings.

b. The Contractor must provide the Engineer with shop drawings and detailed construction procedures for the concrete element. Shop drawings must show the form dimensions and location and type of reinforcement in the precast concrete elements. The drawings must be delivered to the Engineer for approval ten (10) working days before fabrication is to begin. No work must begin until the drawings are approved.

c. The tolerance on placement of welded steel wire fabric in the concrete element must be $\pm$ 1 inch. The chairs, spacers or other devices used to maintain the welded steel wire fabric in position must have rust resistant tips. The cost of any welded steel wire fabric required to transport the precast concrete elements must be deemed included in the cost of these items.

d. Concrete must be consolidated in the forms by internal vibrators. Exposed surfaces must be free from objectionable imperfections, such as honeycomb and air voids as determined by the Engineer. If air voids collect at the interface of the concrete and forms, the forms must be tapped on the outside with rubber mallets or similar devices to displace the entrapped air.

Curing

a. The precast concrete elements may be cured as per the requirements for cast in place concrete.

b. If the concrete elements are steam cured, the elements must be cured in an enclosure free from outside drafts, and cured in a moist atmosphere. The temperature must be maintained at a temperature between 125 degrees and 160 degrees F. by the injection of steam for a period of not less than 12 hours. Steam curing must not begin in less than 2 hours from the time that the last concrete was placed. Care must be taken by the Contractor to prevent localized "hot spots" caused by the steam lines. A continuous temperature time recorder is required for each enclosure. The temperature of the curing atmosphere for any method must not be increased or decreased at a greater rate than 40 degrees F. per hour.

Repair

a. Where approved by the Engineer, occasional imperfections in manufacture or those caused by mishandling may be repaired. The repairs must be properly finished and cured. The color of the repaired area must match as closely as possible with the rest of the element color. Repairs may be made with a mixture of sand and cement, and must be made to the satisfaction of the Engineer.

Basis of Acceptance

The precast concrete element must be accepted at the job site based on all of the following:

(1) The manufacturer's name must appear on the N.Y.S. Department of Transportation's Approved List of "Precast Concrete Manufacturers Approved for QC/QA Production" for either Product Group 1, 2, or 4.

(2) A manufacturer's certification.

(3) An acceptable product evaluation made by the Engineer.

(C) Dimensions must be as required in the contract documents. Dimensions must not vary by more than 1/4 inch from those specified. Concrete elements must be sound and free from cracks or other defects that would interfere with their proper placement or performance.

(D) Prior to installation, the subgrade must be compacted and carefully graded such that the concrete element will be seated flush on the subgrade, at the proper elevation and slope as shown on the Contract Drawings.

GI-4.06.5 SUBMITTALS

A. Manufacturer must have experience in design and fabrication of similar products and with facilities for fabricating the concrete elements with the quality specified herein and without delay to the specified schedule.

B. If Precast is chosen, the Contractor must furnish: Shop drawings, in accordance with the requirements of Subsection 1.06.13. of the NYC Department of Transportation Standard Highway Specifications. Engineering layout drawings will be provided for approval and to assist field installation. The drawings will include dimensions, identification and location of each trench part in the trench layout along with a bill of material.

GI-4.06.6 PRICE TO COVER

The contract price bid per concrete elements must cover the cost of all labor, materials, equipment, insurance, and incidentals necessary to complete the work including, but not limited to, excavation and sawcutting of existing pavement, concrete, welded steel wire fabric, grout, backfilling, and restoration of any disturbed adjacent pavement, as may be required, to satisfactorily complete the work; preparation and submission of shop drawings and concrete mix design criteria; supports, forms, joint filler, and joint sealer; leveling course material; foundation materials in accordance with Subsection 4.13.4 (B) of the NYC Department of Transportation Standard Highway Specifications; curing; damping of the subgrade; to furnish samples for testing; and to maintain the reinforced concrete elements in good condition as specified in Section 5.05 of the NYC Department of Transportation Standard Highway Specifications; all in accordance with the Contract Drawings, the specifications and the directions of the Engineer.

Payment will be made under:

Item No.	Item	Pay Unit
GI-4.06 A	REINFORCED CONCRETE APRON	S.F.
GI-4.06 SP	CONCRETE SEDIMENT PAD	L.F.
GI-4.06 CC-A	CONCRETE CHAMBER (TRENCH) AT INLET	EACH
GI-4.06 CC-B	CONCRETE CHAMBER (TRENCH) AT OUTLET	EACH
GI-4.06 CO	CONCRETE WALKWAY AND FOOTER FOR HYDRAULICALLY CONNECTED GREEN INFRASTRUCTURE PRACTICES	L.F.
GI-4.06 CU	REINFORCED CONCRETE CULVERT AND COVER	L.F.
GI-4.06 CG	REINFORCED CONCRETE GUTTER	L.F.
GI-4.06 CS	CONCRETE STRIP	L.F.
GI-4.06 CT	5 INCH THICK CONCRETE TOP	S.F

SECTION GI-4.20 — INTERIM COVER CROP FOR GI PRACTICES

GI-4.20.1. INTENT

This section describes the work of planting an interim cover crop.

GI-4.20.2. DESCRIPTION

This item must be applied as temporary seeding [via an interim cover crop] for newly constructed Green Infrastructure Practices after the construction of the Green Infrastructure Practice is complete with periodic reseeding as necessary until plant installation at the next appropriate planting season.

Temporary seeding serves to reduce erosion, hold newly graded soil in place, prevent accumulation of litter, prevent weed growth, stabilize and enhance the engineered soil, and/or present a finished look to the local community.

GI-4.20.3. MATERIALS

Seed mixture must be designed to tolerate a wide range of conditions and is to be used in conjunction with erosion control jute matting. For spring to early summer plantings, the mix must contain by weight 15 lbs per acre of Italian Rye-Grass (species: Lolium multiflorum), 30 lbs per acre of Annual Oats (Avena sativa) and 5 lbs per acre Partridge Pea (Chamaecrista fasiculata). For summer plantings, May 20 to August 15, the mix must contain 50 lbs per acre of Buckwheat (Fagopyrum esculentum) and 20 lbs per acre Italian Rye-Grass (Lolium multiflorum). For fall planting the mix must contain 50 lbs per acre Italian Rye-Grass (Lolium multiflorum). Seed mixes must contain Pure Live Seed (PLS) as manufactured by Greenbelt Native Plant Center, Staten Island, NY, Ernst Conservation Seeds, Meadville, PA or approved equivalent. Seed mix and time of seeding must be approved by the Engineer prior to installation.

GI-4.20.4. METHODS

Before any seeding of the interim crop cover is placed, all areas must be thoroughly loosened and graded to true lines, free from all unsightly variations, bumps, ridges or depressions. The surface of the Green Infrastructure Practice where the item will be placed must be cleared on any materials or debris which might interfere with the formation of a finely pulverized seed bed. The area must graded to the satisfaction of the Engineer.

Contractor must consult with the Engineer regarding the suitability of the season before placing the temporary seeding. Seeding must be done in moderately dry to moist (not wet) soil. The rate of seeding must be ten (10) pounds per thousand (1,000) square feet.

Temporary seeding must be made within 24 hours of placement of engineered soil & sand, or topsoil if applicable, is complete. If not, the soil must be scarified prior to seeding.

Any area that fails to establish vegetative cover adequate to prevent rill erosion must be reseeded as soon as such areas are identified.

Engineer to determine if cover crop should be removed as needed when installing permanent plantings.

GI-4.20.5. MEASUREMENT

The quantity to be measured for payment hereunder must be the number of square yards of area initially seeded to the satisfaction of the Engineer. Measurement will be made on a one-time basis and no additional measurement will be made for any area reseeded as directed.

GI-4.20.6. PRICE TO COVER

The contract price must be a unit price per square yard of area initially seeded and must cover the cost of furnishing all labor, materials, plant, equipment, insurance, removal for permanent planting, and incidentals necessary to complete the work in accordance with the Contract Drawings, the specifications and the directions of the Engineer. Work must be paid in increments, 50% at successful installation as described in GI-4.20.4; final 50% must be paid at time of permanent planting installation.

Payment will be made under:

Item No.	Item	Pay Unit
GI-4.20	INTERIM COVER CROP	S.Y.

SECTION GI-5.10 — STONE COLUMN

GI-5.10.1 DESCRIPTION

Furnish and install stone columns as specified herein in accordance with the NYC Department of Environmental Protection Standard Design and Guidelines for Green Infrastructure Practices drawings and as directed by the Engineer.

GI-5.10.2 MATERIALS

(A) Open-graded stone must comply with GI-2.07 – Clean Open Graded Stone.

(B) Pipe and fittings must comply with GI-2.16A – PVC Pipe.

(C) Geotextile fabric must comply with GI-2.09 DR – Geotextile Fabric For Drainage.

(D) Select granular fill material must comply with Section 6.67 of the NYC Department of Transportation Standard Highway Specifications

GI-5.10.3 CONSTRUCTION METHODS

(A) The Contractor must auger a fourteen (14") inch diameter casing a minimum of five (5') vertical feet into the permeable soil layer. The final depth of the stone column must be determined by the Engineer but must be no deeper than twenty (20') feet.

(B) The stone column must consist of:

(1) Twelve (12) inch inside diameter perforated or slotted PVC pipe

a. The pipe length must be determined by the Engineer.

(2) If needed, coupling to connect two segments of the perforated or slotted PVC pipe

(3) Twelve (12) inch round Column Cap must be manufactured with perforations or slotted grate.

a. The top of the Stone Column Cap must be below the interface of the Engineered Soil and Sand and the Stone Base.

ASTM D5208-14 "Standard Practice for Fluorescent Ultraviolet (UV) Exposure of Photodegradable Plastics"

ASTM D4329 "Standard Practice for Fluorescent Ultraviolet (UV) Lamp Apparatus Exposure of Plastics"

(C) Wrap geotextile fabric around the perforated or slotted PVC pipe

(D) Pull casing and use select granular fill to fill the annular space between the stone column pipe and the hole.

(E) Fully saturate stone column and surrounding fill. Once the fill is saturated, additional granular fill should be used to bring to grade. Saturate again and repeat as necessary.

(F) Fill the perforated or slotted PVC pipe with open-graded stone type D (item GI-2.07D) and seal with a perforated cap

(G) Space the stone columns in accordance with the Contract Drawings and as directed by the Engineer.

(H) Only install a third, middle stone column within the Green Infrastructure practice where the planting bed will contain no tree and in accordance with the Contract Drawings.

(I) During construction, keep the column free from foreign matter. The piping must be left thoroughly clean to the satisfaction of the Engineer.

GI-5.10.4 MEASUREMENTS AND PAYMENT

The quantities to be measured for payment under these Items must be the number of Vertical Feet of stone column installed to the satisfaction of the Engineer.

The price bid must be a unit price per Vertical Feet of stone column installed as shown on the Contract Drawings and must cover the cost of all labor, materials, equipment, insurance, and incidentals necessary to complete the work, including, but not limited to, auguring a fourteen (14") inch diameter temporary casing and its removal, furnishing and installing twelve (12") inch PVC diameter perforated pipe, PVC coupling(s), perforated cap, geotextile fabric for drainage and fastening collar, select granular fill, and clean open graded stone; all in accordance with the Contract Drawings, the specifications and directions of the Engineer.

Payment will be made under:

Item No.	Item	Pay Unit
GI-5.10	STONE COLUMN	V.F.

SECTION GI-5.13A — STORMWATER INLET

GI-5.13A.1. DESCRIPTION

Stormwater Inlets must be constructed of the sizes and shapes shown complete with frames, gratings, covers, hoods, hooks, and all other hardware as shown or required. The Contractor must furnish and install the stormwater inlet in accordance with the NYC Department of Environmental Protection Standard Design and Guidelines for Green Infrastructure Practices drawings, specifications, and directions of the Engineer.

GI-5.13A.2. MATERIALS AND CONSTRUCTION METHODS

The Contractor is notified that the materials and construction methods necessary and required to construct complete stormwater inlets must be in accordance with the requirements for Catch Basins under Subsections 51.41.2 and 51.41.3 of the NYC Department of Environmental Protection (DEP), Standard Sewer and Water Main Specifications, and in accordance with STANDARD DESIGN AND GUIDELINES FOR GREEN INFRASTRUCTURE PRACTICES Standard Details that are made part of this Contract, unless otherwise amended herein.

GI-5.13A.3. PRECAST REINFORCED CONCRETE STORMWATER INLET

The Contractor is advised that in lieu of poured-in-place stormwater inlets the substitution of Precast Reinforced Concrete Stormwater Inlets that comply with the Standards for Green Infastructure drawings will be permitted as Stormwater Inlets. The Precast Reinforced Concrete Stormwater Inlets must be constructed in accordance with the applicable requirements for Catch Basins under Subsection 51.41.4 of the NYCDEP Standard Sewer and Water Main Specifications, and in accordance with the NYC Department of Environmental Protection STANDARD DESIGN AND GUIDELINES FOR GREEN INFRASTRUCTURE PRACTICES drawings that are made part of the Contract, unless otherwise amended herein.

GI-5.13A.4. MEASUREMENT

The quantities of stormwater inlets to be measured for payment must be the number of stormwater inlets, incorporated in the work, complete, to the satisfaction of the Engineer, as shown, specified or required.

GI-5.13A.5. PRICE TO COVER

The contract price for "STORMWATER INLET" must be the unit price bid per each stormwater inlet and must cover the cost of all labor, materials, plant, equipment, samples, tests, insurance, and incidentals required and necessary to construct the stormwater inlets of the sizes and dimensions, and at the locations and to the elevations shown, including the earth excavation of all materials of whatever nature encountered (See Section 40.03 - Earth Excavation of the NYC Department of Environmental Protection Standard Sewer Specifications); reinforcement; all sheeting and bracing; pumping; fluming; bridging; backfilling; cleaning up; and furnishing and installing all other items necessary to complete this work and do all work incidental thereto, all in accordance with the Contract Drawings, specifications and standards, and as directed by the Engineer. Included in the price

hereunder must be the cost for all labor and materials required to install frames, gratings, covers, hoods, hooks and all other hardware; in accordance with the Contract Drawings, specifications and standards, and as directed by the Engineer.

Where precast reinforced concrete stormwater inlets are used in lieu of poured-in-place stormwater inlets, the cost for furnishing, delivery and installation of the precast reinforced concrete stormwater inlets, complete with reinforcement; frames; gratings; covers; hoods; hooks and other hardware; additional excavation and sheeting, as required; select granular fill; hand excavation; and all work incidental thereto all in accordance with the Contract Drawings, specifications and standards, must be deemed included in the contract price bid for "STORMWATER INLET". No additional or separate payments will be made for any work associated with the installation of precast reinforced concrete stormwater inlets.

Payment will be made under:

Item No.	Item	Pay Unit
GI-5.13A	STORMWATER INLET	EACH

SECTION GI-5.35 — SLEEVE FOR UTILITY CROSSINGS

GI-5.35.1 DESCRIPTION

The Contractor must furnish and install HDPE (High-Density Polyethylene) split sleeve pipes to protect utilities crossing Green Infrastructure practices. Each split sleeve pipe must have a wire (not wire mesh) reinforced concrete collars on each side of the Green Infrastructure practice, as shown on the NYC Department of Environmental Protection STANDARD DESIGN AND GUIDELINES FOR GREEN INFRASTRUCTURE PRACTICES drawings.

Sleeve lengths must range from five (5') feet to eight (8') feet depending on the width of the Green Infrastructure practice or at any given location it must be two (2') feet greater than the width of the Green Infrastructure practice. This section describes the full-depth saw cutting of both sidewalk and roadway pavements for the opening of pavements under other contract items.

GI-5.35.2 MATERIALS

(A) HDPE SPLIT SLEEVE PIPE must be of the diameter and length required as shown on the Contract Drawings or as directed by the Engineer. HDPE SPLIT SLEEVE PIPE must comply with the requirements of Section GI-2.16.

(B) SEALING GASKET must be as recommended by the manufacturer of the sleeve.

(C) CONCRETE must be Type B-32 comply with the requirements of Sections 3.05 and 4.06 in the NYCDOT Standard Highway Specifications.

(D) WIRE REINFORCEMENT must comply with the requirements of Sections 4.14 in NYC Department of Transportation Standard Highway Specifications. Size and spacing must vary in accordance with the cross-sectional area of the utility and as directed by the Engineer.

(E) MORTAR, if required for end capping, must comply with the requirements of Section 3.07 in the NYC Department of Transportation Standard Highway Specifications, Type 1, Mortar, except that the proportions must be one (1) part of cement to one and one-half (1-1/2) parts of sand and that the ingredients may be mixed by hand.

(F) WATERTIGHT EXPANDING FOAM SEALANT encasing the utilities in the split sleeve pipe must be meet the requirements of ASTM C1620.

(G) PVC PIPES for the concrete piers supporting the concrete strip must be of the diameter and length required as shown on the NYC Department of Environmental Protection Standard Design and Guidelines for Green Infrastructure Practices drawings or as directed by the Engineer. PVC PIPE must comply with the requirements of Section GI-2.16 A.

GI-5.35.3 METHODS

(A) Duct spacers must be used to hold utilities in position to maintain a two (2") separation between the concrete utility duct and the HDPE sleeves when encasing utilities within the split sleeve pipe.

(B) The space between the utility and the sleeve must be filled with watertight expanding foam sealant as directed by the Engineer.

(C) PVC pipe must be used to form the concrete piers per the NYC Department of Environmental Protection STANDARD DESIGN AND GUIDELINES FOR GREEN INFRASTRUCTURE PRACTICES drawings.

(D) Immediately after the Engineer has inspected and approved the encasement, the HDPE Split Sleeve pipe must be backfilled as per the appropriate items.

(E) Concreting must comply with the requirements of Sections 3.05 and 4.06 of NYC Department of Transportation Standard Highway Specifications.

GI-5.35.4 DAMAGE TO UTILITY CROSSINGS

Any damage cause to the utility crossings during the construction or any cause whatsoever, whether in or out of the trench, must be made good at the sole expense of the Contractor.

GI-5.35.5 MEASUREMENTS

The quantities to be measured for payment under these Items must be the number of linear feet (laying length) of **SLEEVE FOR UTILITY CROSSINGS** actually laid in their final position, to the satisfaction of the Engineer, measured horizontally along the centerline of the HDPE Split Sleeve pipe.

GI-5.35.6 PRICE TO COVER

The price bid for each type of **SLEEVE FOR UTILITY CROSSINGS** must be a unit price per linear foot and must cover the cost of all labor, materials, equipment, insurance, and incidentals necessary to complete the work of furnishing and installing HDPE Sleeve of whatever diameter is required and must include, but not be limited to, furnishing and installing sealing gasket, fittings, end caps, sealant, mortar, formwork, PVC pipe, supports, and connecting and joining pipe to other pipes or drainage structures; furnishing and placing concrete collars at each side of the Green Infrastructure practice; all in accordance with the Contract Drawings, the specifications and directions of the Engineer.

No additional payment will be made for excavation and backfilling.

Payment will be made under:

Item No.	Item	Pay Unit
GI-5.35	SLEEVE FOR UTILITY CROSSINGS	L.F.

SECTION GI-6.09 — CONCRETE HEADER

GI-6.09I.1 INTENT

This section describes construction of Concrete Headers.

GI-6.09.2 DESCRIPTION

T (Trapezoid) - shaped Concrete Headers must be:

- Six (6") inches wide at the top, fifteen (15") or nineteen (19") inches deep, and nine (9") wide at the base
- Laid on a foundation three (3") inches thick
- Constructed to the lines and grades as shown on the NYC Department of Environmental Protection Standard Design and Guidelines for Green Infrastructure

GI-6.09.3 MATERIALS AND METHODS

All materials and methods must comply with the requirements of Sections 6.09.3 and 6.09.4, as appropriate, in the NYC Department of Transportation Standard Highway Specifications.

GI-6.09.4 MEASUREMENT

The quantity to be measured for payment must be the number of linear feet of concrete header constructed, complete, in place, measured along the center line of the header.

GI-6.09.5 PRICE TO COVER

The contract price per linear foot of concrete header must cover the cost of furnishing all labor, materials, plant, equipment, insurance, and incidentals required to construct concrete header, complete, in place, and must include, but not be limited to, excavation, curing, furnishing samples for testing as may be required and maintaining the concrete header in good condition as required in Section 5.05 of the NYC Department of Transportation Standard Highway Specifications, all in full compliance with the Contract Drawings, the specifications and directions of the Engineer.

Payment will be made under:

Item No.	Item	Pay Unit
GI-6.09-T1	CONCRETE HEADER, TRAPEZOID-SHAPE (6" WIDE AT TOP X 15" DEEP X 9" WIDE AT BASE)	L.F.
GI-6.09-T2	CONCRETE HEADER, TRAPEZOID-SHAPE (6" WIDE AT TOP X 19" DEEP X 9" WIDE AT BASE)	L.F.

SECTION GI-6.46 — EPOXY BONDED STONE STRIP BED

GI-6.46.1. INTENT

This section describes the epoxy bonded stone strip bed. The Contractor must install a stone strip bed of the size and depth as shown on the NYC Department of Environmental Protection Standard Design and Guidelines for Green Infrastructure Practices drawings and apply an epoxy bonding agent to the stone strip beds located on top of gabions in Stormwater Greenstreets, and/or where indicated on the Contract Drawings, specifications, and as directed by the Engineer.

GI-6.46.2. MATERIALS

A) The laid stone must conform to GI-2.07C 1-1/2" CLEAN OPEN GRADED STONE, contained herein

B) Epoxy Bonding agent must be a clear, non-toxic, UV-stable bonding. Minimum properties of approved epoxy systems include:

1. Ultimate tensile strength - 4,000psi
2. Compressive strength – 18,800psi
3. Flexural Strength – 11,000psi
4. Bond strength – 1,500psi

GI-6.46.3. METHODS

Stone Strip Beds must be placed as per Contract Drawings. Epoxy Bonding Agent must be then applied to the Stone Strip Beds located on top of gabions in Stormwater Greenstreets in place and/or where indicated on the Contract Drawings.

Epoxy bonding agent is to be sprayed on clean and dry stone surfaces to sufficiently bond top layer of the Clean Open Graded Stone but at a rate no less than recommended by the manufacturer. Do not install if rain is expected within 12 hours. Do not cover area with plastic. Install when outdoor temperature is 50 degrees or above and will not drop below 50 degrees F for at least 12 hours. Allow 24 hours to cure. If the temperature is around 50 degrees F then it may take up to 48 hours to cure.

GI-6.46.4. SUBMITTALS

Prior to the procurement of epoxy bonding agent, the following information and samples are required for review and approval for each source:

1. Product Data: Submit product data provided by manufacturer.
2. Submit a copy of the MSDS for Epoxy Bonding Agent.

GI-6.46.5. EPOXY BONDING AGENT SUPPLIERS

1. Pond Armor
   P.O. Box 6558
   Santa Maria, CA 93456
   phone: 800-716-1545 · fax: 805-922-4580
   email: info@pondarmor.com
   www.pondarmor.com

2. Epoxy Bonding Agent #17
A Division of Epoxy Systems, Inc.
20774 W. Pennsylvania Ave.
Dunnellon, Florida 34431
email: info@epoxy.com
www.epoxy.com

3. Or approved equivalent.

GI-6.46.6. RELATED SECTIONS

Section GI-2.06 – L-Shaped Edging, contained herein.

GI-6.46.7. MEAUREMENTS

The quantity of EPOXY BONDED STONE STRIP BED to be measured for payment must be the number of cubic yards of Clean Open Graded Stone incorporated in the finished work, measured in place, to the satisfaction of the Engineer.

GI-6.46.8. PRICE TO COVER

The contract price bid per cubic yard of EPOXY BONDED STONE STRIP BED must cover the cost of all labor, materials, equipment, insurance, and incidentals necessary to furnish and place an approved strip stone bed at the site to complete the work and must include, but not be limited to, furnishing and applying an epoxy bonding agent along the stone strip bed within the limits shown on the NYC Department of Environmental Protection Standard Design and Guidelines for Green Infrastructure Practices drawings; all in accordance with the Contract Drawings, the specifications and the directions of the Engineer.

Payment will be made under:

Item No.	Item	Pay Unit
GI-6.46	EPOXY BONDED STONE STRIP BED	C.Y.

SECTION GI-6.51 PAVEMENT KEY ALONG CURB (3' TO 6' WIDE)

GI-6.51.1 INTENT

This section describes the work of installing pavement keys to grind (mill) and remove a portion of the existing asphaltic wearing course and granular base to remove depressed or damaged roadway, to facilitate storm water run off (without ponding), to facilitate installation of new pavement and must dispose of all asphaltic millings and other material; all in accordance with the specifications, the Contract Drawings, and the directions of the Engineer.

GI-6.51.2 DESCRIPTION

The construction of pavement keys must consist of sawcutting, grinding (milling), and removing a portion of the existing wearing course and granular base to the required depth and width, generally next to curb or areas of poor pavement; all in accordance with the Contract Drawings, the specifications and the directions of the Engineer.

GI-6.51.3 METHODS

All methods must comply with the requirements of Section 6.75 of the NYC Department of Transportation Standard Highway Specifications.

No debris will be allowed to accumulate at the site.

All grinding (milling) must be done in conjunction with the installation of new or reset curb, precast porous concrete gutter, and aprons.

GI-6.51.4 USES

Pavement Key along the curb line (various widths) must be used in the following locations:

(A) At all locations requiring gutter adjustments (3' to 6' wide) both inside and outside the green infrastructure practice's curb limits as directed. To lower roadway or reshape roadway to eliminate ponding.

(B) To remove asphaltic bumps or depression or badly crazed areas in the roadway to provide positive surface flow into the green infrastructure practice's inlet area.

(C) Grinding (milling) must be to the required depth to facilitate an average of 2" resurfacing after the work is completed.

(D) At locations to be excavated under other contract items.

GI-6.51.5 MEASUREMENT

The quantity to be measured for payment, under Item GI-6.51, must be the number of cubic yards of grinding existing asphaltic concrete wearing course actually cut out to provide a pavement key along the curb as directed by the Engineer.

Measurement must be a vehicle measurement based on the number of cubic yards of millings

removed from the site to the satisfaction of the Engineer, measured in trucks at the place of loading. Only water level loads that have been raked by the Contractor to a flat exposed surface will be accepted and no allowance will be made for any crown or peak of the load.

GI-6.51.6 PRICE TO COVER

The contract price per cubic yard of Item GI-6.51, must cover the cost of furnishing all labor, plant, equipment, insurance, and necessary incidentals required and completing the work, including saw cutting at beginning and end of grinding limits, cutout of existing asphaltic material at street hardware and at saw cut joints, loading all grindings and excavated material into dump trucks, and removing and disposing of said material away from the site, all in accordance with the Contract Drawings, the specifications and the directions of the Engineer.

Payment will be made under:

Item No.	Item	Pay Unit
GI-6.51	PAVEMENT KEY ALONG CURB LINE (3' TO 6' WIDE)	C.Y.

SECTION GI-6.70 — MAINTENANCE AND PROTECTION OF TRAFFIC

GI-6.70.1 DESCRIPTION

Under this section, the Contractor must be required to complete the work of maintaining and protecting all pedestrian and vehicular traffic within the vicinity of each Green Infrastructure Practice, as defined herein, and noted in the Special Provisions (S – Pages) of the Project to be constructed under the contract. This must include, but not be limited to, furnishing, placing, relocating and removing, when directed, all necessary temporary warning and regulatory signs and temporary traffic control devices to re-route and protect traffic - all in accordance with an approved Maintenance and Protection of Traffic (MPT) Plan, the Contract Drawings, the specifications and directions of the Engineer.

Prior to performing any work in the Contract, if there are no MPT plans provided in the contract documents or the Contractor is proposing a change to the contract MPT plan, the Contractor must prepare and submit an MPT Plan for the work required under the contract. The MPT Plan must be prepared by a New York State Licensed Professional Engineer who is a qualified and experienced in Traffic Engineering and Work Site Safety. The MPT Plan must include all necessary and required legal precautions for the protection of traffic and for the safety of the public, and must be subject to approval by the New York City Department of Transportation Office of Construction Mitigation and Coordination (OCMC) and the Engineer.

The provisions of this section are supplementary to and do not abrogate the General Conditions (Section 1.06) of the NYC Department of Transportation Standard Highway Specifications, the General Notes on the Contract Drawings relating to maintenance and protection of traffic following this Section or the OCMC Traffic Stipulations. Furthermore, any conditions pertaining to the maintenance and protection of traffic during the life of the contract which are addressed in the General Conditions and in the General Notes on the Contract Drawings, whether or not addressed under this Section, must be deemed as having been addressed under this Section.

GI-6.70.2 MATERIALS AND METHODS

All materials and methods must comply with Section 6.70 of the NYC Department of Transportation Standard Highway Specifications.

GI-6.70.3 NONCONFORMANCE

If the Contractor fails to maintain and protect traffic adequately and safely for a period of three (3) hours at a Green Infrastructure practice under construction, the Engineer may correct the adverse conditions by any means the Engineer deems appropriate, and must deduct the cost of the corrective work from any monies due to the Contractor.

However, where major nonconformance with the requirements of this specification is noted by the Engineer, and prompt Contractor compliance is deemed not to be obtainable, all contract work may be stopped by direct order of the Engineer, regardless of whether corrections are made by the Engineer as stated in the paragraph above.

Furthermore, in addition to the remedies specified above, in the event the Contractor fails to comply, within three (3) consecutive hours after written notice from the Engineer, with the requirements of the contract and the specifications in the matter of providing facilities and services for the maintenance and protection of traffic, the Contractor must pay to the City of New York, until such notice has been complied with or rescinded, the sum specified in Schedule

A per calendar day, for each instance of such failure, as liquidated damages and not as a penalty, for such default.

Any money due the City of New York under this provision must be deducted from the amounts due or to become due to the Contractor for work performed under the contract.

GI-6.70.4 MEASUREMENT

The quantity to be measured for payment must be the number of Green Infrastructure practices constructed under this contract for which the Contractor has provided adequate Maintenance and Protection of Traffic. Measurement must be made on a one-time basis for each Green Infrastructure practice and no additional measurement or payment will be made for any removals, reinstallations or resetting of materials and equipment as may be required at the same Green Infrastructure practice's location. Where there are two (2) or more Green Infrastructure practices in the same block, each must be counted as a separate Green Infrastructure practice.

GI-6.70.5 PRICE TO COVER

The price bid for Maintenance and Protection of Traffic must be a unit price for EACH Green Infrastructure practice which must cover the cost of all labor, materials, plant, equipment, insurance, and incidentals required to maintain and protect pedestrian and vehicular traffic, including, but not limited to, furnishing, installing, relocating and maintaining lighted barricades, plastic barrels with flashers, temporary timber curbs, construction signs, flashing arrow boards, variable message signs, safety orange construction fencing, chain link fence, temporary pedestrian steel barricades, warning devices, cones, flags, lights, temporary ribbon, temporary pavement markings, etc., unless otherwise provided for under other scheduled contract bid items; providing and maintaining roadway plates; constructing and maintaining temporary ramps; and all incidentals necessary for completing the work at each Green Infrastructure practice; all in accordance with the Contract Drawings, approved MPT Plans, the specifications, and the directions of the Engineer. However, no additional payment will be made no matter how many times an MPT set up is removed, reinstalled or changed after the initial MPT set up at each Green Infrastructure practice.

Payment for Maintenance and Protection of Traffic at each Green Infrastructure practice will be made as follows:

> Fifty (50%) percent of the unit price bid for each Green Infrastructure practice will be paid when the initial MPT set up is satisfactorily installed at the Green Infrastructure practice's location and the remaining fifty (50%) percent of the unit price bid will be paid for that location upon either completion of installed of the Steel Tree Pit Guard or after the final temporary fencing is removed after planting, as applicable.

Providing and placing of Asphaltic Concrete Mixture and/or Binder Mixture for temporary ramps and for temporary pavement and trench restorations will be paid for under the appropriate scheduled contract items.

Payment will be made under:

Item No.	Item	Pay Unit
GI-6.70	MAINTENANCE AND PROTECTION OF TRAFFIC	EACH

SECTION GI-7.01SGF — STEEL GRATE AND FRAME

GI-7.01SGF.1 INTENT

This section describes the installation of steel gratings, frames, and accessories for use with Right-of-Way Green Infrastructure Practices, or as directed by Engineer.

GI-7.01SGF.2 DESCRIPTION

Under this section, the Contractor must install steel frames and gratings all in accordance with the Contract Drawings, the specifications, and the directions of the Engineer.

GI-7.01SGF.3 MATERIALS

Steel Grates and Frames must comply with the following requirements:

(A) Material to be Grade A36 Carbon Steel which is hot-dip galvanized per ASTM A123.

(B) Bearing bars must be 1" x 3/16" with edge of plate flush and true, spaced 11/16" on center as to provide 1/2" space between bars.

(C) Cross bars and bearing to be 1" x 3/16" plate cross section, spaced 4" on center.

(D) Bearing bars and cross bars must comply with ASTM A-123 Hot-Dip Galvanized Steel Products.

(E) Top surface of grate must be a slip resistant surface in accordance to US Dept. of Justice Americans with Disabilities Act – 2010 Design Standards Section 302.

(F) Grating supports must be of 2" x 2" x 1/4" angles with galvanized steel grating fasteners as per ASTM A-153 Hot-Dip Galvanized Steel Hardware.

(G) Overall dimensions, details, and direction of bearing bars, must be in accordance with the Contract Drawings.

(H) Fasteners used to secure the close mesh grating to the support angles shall be 316 Stainless Steel.

GI-7.01SGF.4 MANUFACTURERS

(A) Ohio Gratings, Inc.
5299 Southway St. SW
Canton, Ohio 44706
www.ohiogratings.com

(B) Amico

3245 Fayette Avenue
Birmingham, Alabama 35208
www.amicoglobal.com

(C) Grating Pacific, Inc.
3651 Sausalito Street
Los Alamitos, California 90720
http://www.gratingpacific.com

(D) Other manufacturers of equivalent products may be submitted to the Engineer for approval.

GI-7.01SGF.5 CONSTRUCTION METHODS

General

All work must be done in accordance with the directions of the Engineer.

The Contractor must take field measurements prior to preparation of final shop drawings and fabrication where required to ensure proper fitting of the work.

Furnishing and Installing Steel Grate and Frame

Prior to grating installation, the Contractor must inspect supports for correct alignment and conditions for proper attachment and support of the gratings. Any inconsistencies between contract drawings and supporting structure deemed detrimental to grating placement must be reported in writing to the Engineer or owner's agent prior to placement.

The Contractor must install grating in accordance with shop drawings and standard installation clearances as recommended by ANSI/NAAMM MBG-531-09 Metal Bar Grating Manual. The Contractor must use approved attachment system and fasteners to secure grating to supporting members as shown on plans.

GI-7.01SGF.6 SUBMITTALS

The Contractor must submit the manufacturer's catalog pages including load tables, anchor details and standard installation details. The Contractor must submit for approval shop drawings for fabrication and erection of all gratings, based on construction drawings of current issue. Include plans, elevations, and details of sections and connections as required. Show type and location of all fasteners. The Contractor must submit samples of Grating and Anchorage system for approval.

GI-7.01SGF.7 MEASUREMENT

The quantities to be measured for payment under each item must be the number of square feet of steel grating satisfactorily installed measured within the frame perimeter.

GI-7.01SGF.8 PRICE TO COVER

The contract price bid must be a unit price per square foot and must cover the cost of all labor, material, equipment, insurance, and incidentals necessary to install frames and grates, all in accordance with the Contract Drawings, the specifications, and the directions of the Engineer.

Payment will be made under:

Item No.	Item	Pay Unit
GI-7.01SGF	STEEL GRATE AND FRAME	S.F.

SECTION GI-7.01SPC — STEEL PLATE CURB COVER

GI-7.01SPC.1 INTENT

This section describes the steel plate curb cover for use at curb cut Inlets with various Right-of-Way Green Infrastructure Practices, or as directed by Engineer.

GI-7.01SPC.2 DESCRIPTION

Under this section, the Contractor must furnish and install steel plate curb cover in accordance with the Contract Drawings, the specifications, and the directions of the Engineer.

GI-7.01SPC.3 MATERIALS

Steel Plate Curb Cover must comply with the following requirements:

(A) Steel plate curb cover must be capable of supporting HS-20 loading and fabricated of ASTM A36 steel with a slip resistant surface finish in accordance with the US Dept. of Justice ADA Act – 2010 Design Standards Section 302.

(B) The steel plate must have a cross section thickness of 1.25 inches, a width of 6 inches and a length sufficient to extend 4 inches beyond each side of the inlet curb opening of the GI Practice..

(C) Anchor rods are to be shop-welded to the steel plate curb cover as indicated in the Contract drawings. Anchor rods must be 0.5-inch diameter L-shaped (5-inch by 2-inch) ASTM A-36 steel rods with a roughen surface.

(D) Overall dimensions and details, must be in accordance with the Contract Drawings.

GI-7.01SPC.4 CONSTRUCTION METHODS

General

All work must be done in accordance with the directions of the Engineer.

The Contractor must obtain field measurements prior to preparation of final shop drawings and fabrication to ensure proper fitting of the work.

Furnishing and Installing Steel Plate Curb Cover

The contractor must install steel plate curb cover into concrete curb formwork and must provide necessary supports to set the final elevation in accordance to the Contract Drawings. The top of steel plate curb cover must be flush with top of curb and adjoining sidewalk.

The contractor must carefully pour concrete into the formwork and work around the anchor rods in a sufficient manner to ensure adequate contact between the concrete and anchor rod surface.

GI-7.01SPC.5 SUBMITTALS

The Contractor must submit the manufacturer's catalog pages including load tables, anchor details and standard installation details. The Contractor must submit for approval shop drawings for fabrication and erection of all covers, based on construction drawings of current issue. Include plans, elevations, and details of sections and connections as necessary. Show type and location of all fasteners. The Contractor must submit samples of steel plate curb cover materials and shop drawings for approval.

The manufacturer(s) must have experience in the production of steel plate and shop welding with the quality specified herein and without delay to the specified schedule.

GI-7.01SPC.6 MEASUREMENT

The quantities to be measured for payment under each item must be the square foot of steel plate curb cover satisfactorily installed as measured within the curb.

GI-7.01SPC.7 PRICE TO COVER

The contract price bid must be a unit price per square foot and must cover the cost of all labor, material, equipment, insurance, and incidentals necessary to install steel plate curb cover, all in accordance with the Contract Drawings, the specifications, and the directions of the Engineer.

Payment will be made under:

Item No.	Item	Pay Unit
GI-7.01SPC	STEEL PLATE CURB COVER	S.F.

SECTION GI-7.13E — MAINTENANCE OF GI SITE

GI-7.13E.1 DESCRIPTION

This section describes the maintenance, protection and cleanup of the construction site and each installed Green Infrastructure practice, including but not limited to ROW Bioswales, Raingardens, Infiltration Basins, Greenstrips, Permeable or Porous Pavements or Stormwater Greenstreets. The Contractor is placed on notice that the Contractor must be required to provide a safe and clean site throughout all phases of the work and during all of the Contractor's operations at each Green Infrastructure practice. Furthermore, for the purposes of the contract, monitoring by the City of the Contractor's site maintenance, site protection and site cleanup is considered a project objective necessary to eliminate and/or mitigate public disruption and inconvenience, and to ensure public health and safety.

The Contractor must therefore, at all times, conduct this weekly operation in a manner which promotes a clean site and insures the convenience, safety and health of general users consisting of, but not limited to, the motorist, the pedestrian and the abutting property owners/tenants, as well as those of the Contractor's own employees. During active construction, site shall be cleaned and secured daily including all construction waste, litter, and materials. During the establishment period, weekly inspection for site cleanliness and the removal of litter shall be required.

The provisions of this section are supplementary to and do not abrogate the General Conditions (Section 1.06) of the NYC Department of Transportation Standard Highway Specifications or the General Notes on the Contract Drawings relating to the protection and cleanup of the site, and the delivery and storage of materials at the site of each Green Infrastructure practice facility. Furthermore, any conditions pertaining to the maintenance, protection and cleanup of the construction site during the life of the contract, including the Guarantee Period which are addressed in the General Conditions and in the General Notes on the Contract Drawings, whether or not addressed under this Section, must be deemed as having been addressed under this Section.

GI-7.13E.2 METHODS

All methods must comply with the requirements of Subsection 7.13.2 of the NYC Department of Transportation Standard Highway Specifications.

In addition, erosion repair, and soil and stone replacement must take place as needed following significant rainfall events. Visually inspect the Site for erosion and soil and stone settling, including areas around inlet and outlet structures, embankments, side slopes, and check dams. Symptoms of erosion can include erosive gullies or areas of bare soil. Remove any litter directly covering and immediately upstream or downstream of inlets and outlets so that the drainage path is clear. The top of the mulch (if any) should be at least two (2) inches below the lowest point of the inlet/outlet to minimize blockage.

For permeable pavements, the contractor must be responsible for cleaning and maintenance of the permeable materials both during and after construction until substantial completion and turn over to the city. The contractor must keep construction soil from clogging permeable materials and perform regular maintenance to keep the permeable technologies free from clogging.

GI-7.13E.3 STORAGE OF MATERIALS AND EQUIPMENT

All storage of materials and equipment must comply with the requirements of Subsection GI-7.13.3 of the NYC Department of Transportation Standard Highway Specifications.

GI-7.13E.4 NONCONFORMANCE

If the Contractor fails to maintain and protect the site of a Green Infrastructure practice under construction adequately and safely for a period of three (3) or more consecutive hours, the Engineer may correct the adverse conditions by any means the Engineer deems appropriate, including, but not limited to, "outside services," and must deduct the cost of the corrective work from any monies due to the Contractor.

However, where major nonconformance with the requirements of this specification is noted by the Engineer, and prompt Contractor compliance is deemed not to be obtainable, all contract work may be stopped by direct order of the Engineer, regardless of whether corrections are made by the Engineer as stated in the paragraph above.

Furthermore, in addition to the remedies specified above, in the event the Contractor fails to comply, within three (3) consecutive hours after written notice from the Engineer, with the requirements of the contract and the specifications in the matter of providing facilities and services for the maintenance, protection and cleanup of the construction site, the Contractor must pay to the City of New York, until such notice has been complied with or rescinded, the sum shown per calendar day in Schedule A, for each instance of such failure, as liquidated damages and not as a penalty, for such default.

Any money due the City of New York under this provision must be deducted from the amounts due or to become due to the Contractor for work performed under the contract.

GI-7.13E.5 MEASUREMENT

The quantity to be measured for payment must be the number of Green Infrastructure practices constructed under this contract for which the Contractor has provided adequate Maintenance of Site. Measurement must be made on a one-time basis for each Green Infrastructure practice and no additional measurement or payment will be made for maintaining the site at the same Green Infrastructure practice's location. Where there are two (2) or more Green Infrastructure practices in the same block each will be counted as a separate Green Infrastructure practice.

GI-7.13E.6 PRICE TO COVER

The price bid for Maintenance of GI Site must be a unit price for EACH Green Infrastructure practice which must cover the cost of furnishing all labor, materials, plant, equipment, insurance, and incidentals required to maintain, protect and clean up the site at each Green Infrastructure practice, all in accordance with the Contract Drawings, these specifications, and the directions of the Engineer.

Payment under each location will be made in proportion to the percentage of the Green Infrastructure practice actually completed.

The Contractor will be paid the unit price for the Maintenance of GI Site practice in the following percentage increments:

1) 15% - Completed Construction of the GI practice [including planting material]
2) 15% - Successful Initial Inspection, or Re-Planting
3) 70% - Successful Guarantee Period Inspection

The Contractor will only be paid for the work completed; if the Contractor does not successfully complete the maintenance of GI site, no payment will be made for the percentage increments not completed. Completion of the maintenance of GI site includes completion of all necessary tasks until the end of the Guarantee Period.

Payment will be made under:

Item No.	Item	Pay Unit
GI-7.13E	MAINTENANCE OF GI SITE	EACH

SECTION GI-8.20 — JUTE MESH

GI-8.20.1 INTENT

This section describes Jute Mesh. The Contractor must furnish and place Jute Mesh as specified herein in accordance with the NYC Department of Environmental Protection Standard Design and Guidelines for Green Infrastructure Practices drawings and as directed by the Engineer.

GI-8.20.2 SUBMITTALS

The Contractor must furnish two (2) labeled samples of the Jute Mesh intended for use in the work for approval and the Engineer's use. The label must include the manufacturer's product name and the type of material. The Engineer reserves the right to reject on or after delivery any materials which do not, in the Engineer's opinion, meet these specifications.

GI-8.20.3 MATERIALS

(A) Material Description:

(1) Jute mesh must be a uniform, open, plain weave cloth of undyed and unbleached single jute yarn. Jute mesh must be furnished in rolled strips.

(2) Wood Pegs: Must be wedge shaped, approximately one inch by two inches by six inches (1" x 2" x 6").

(B) The width of the mesh must be approximately forty-five (45) inches or as specified or approved. Mesh must be woven as follows:

(1) Approximately 60 warp ends per yard of width;

(2) Approximately 40 weft ends per linear yard.

(3) Maximum opening of approximately 3/4 " x 3/4 ".

(4) Weight of Mesh must be a minimum of 11 ounces per square yard (plus or minus 5%).

(5) This yarn must be of a loosely twisted construction having an average twist of not less than 1.6 turns per inch and must not vary in thickness by more than one-half its normal diameter.

(C) Smolder Resistance: The mesh must be treated so as to be smolder resistant, meeting the following conditions:

(1) The cloth must be made resistant to smoldering and/or after-glow by treatment with non-leaching and non-toxic chemicals. The chemicals must be non-toxic to vegetation and the germination of seed. The chemicals used for this purpose must resist leaching based on the equivalent of two inches of rain. The cloth itself must bear some identification mark to differentiate it from untreated jute cloth.

(2) "Test Method" – When a lighted cigarette is placed on the upper or treated surface of the cloth, neither flame nor after-glow will proceed in any direction more than twelve inches (12") from the original position of the cigarette after it has burned out completely.

GI-8.20.4 METHODS

Jute mesh must be applied as a ground cover to the surface of all ROW Green Infrastructure Practices before the planting is installed, interim cover crop is placed, or at the direction of the Engineer. Jute mesh must be applied smoothly and must follow the grade of the ROW Green Infrastructure Practice. Jute mesh must be cut and must not be placed within two (2") inches of tree and shrub stems. Plants must not be covered.

Jute mesh must be placed on topsoil and seeded areas as shown on the plans or where directed by the Engineer within areas without stretching so that it lays loosely on the soil and in contact with the soil at all points. The upper end of each roll of jute mesh must be turned and buried to a depth of six (6") inches, with the soil.

Jute mesh must follow the slope and must have a minimum lap of six (6") inches.

Jute mesh must be held tightly to the soil by wood pegs driven firmly into the ground. Wood pegs must be spaced not more than three (3') feet apart, along the sides of the jute mesh and not more than one (1') foot apart at roll ends or as determined by the Engineer.

MAINTENANCE: The Contractor must maintain the areas of jute mesh installation until final acceptance of the contract. Maintenance must consist of providing protection of jute mesh and the repair of areas damaged by equipment, erosion, fire, or other causes, to re-establish the grade and conditions of the area as specified.

GI-8.20.5 MEASUREMENT

The quantity of JUTE MESH to be paid for under this item must be the number of SQUARE YARDS actually installed at the site to the satisfaction of the Engineer.

GI-8.20.6 PRICE TO COVER

The price bid must be a unit price per SQUARE YARD of JUTE MESH and must include the cost of all labor, materials, equipment, insurance, and incidentals necessary to complete the work; all in accordance with the Contract Drawings, the specifications and the directions of the Engineer.

Payment will be made under:

Item No.	Item	Pay Unit
GI-8.20	JUTE MESH	S.Y.

SECTION 4.16 - TREES (REMOVAL, TRANSPLANTING, PLANTING)

4.16.1. INTENT. This section describes the removal, transplanting and planting of trees.

4.16.2. DESCRIPTION. The Contractor must comply with all Federal, State, and Local regulations for plant pest and disease control. NYS Department of Agriculture and NYS Department of Enviromental Conservation require contractors operating in pest infested or disease infected areas to thoroughly clean all equipment units before moving equipment to non-infested or infected areas.

The Contractor and/or subcontractors who will perform tree work of any kind within a quarantine or protective zone is required to abide by all existing and any new or revisions to legislation and orders regarding quarantines and protective zones while working on this contract. Tree work includes, but is not limited to planting, transplanting, pruning, fertilizing, and removing trees; removing stumps; clearing and grubbing of trees or roots; and the transportation and disposal of plant material and vegetative debris.

The Contractor and/or subcontractors must be certified by the New York State Department of Agriculture & Markets to perform work within the Asian Longhorned Beetle Quarantine Zone. The Contractor must review and abide by the description of the quarantine and compliance agreements as presented in the publication entitled Part 139 of the New York State, Department of Agriculture & Markets law. Full information can be obtained from Federal and State Pest Control personnel. Quarantine areas, for the purpose of this contract must be defined as all five Boroughs of the New York City.

Due to current Federal and New York State laws and regulations concerning Asian Longhorned Beetle management, the following host species may not be planted in the quarantine zone. Host species are as follows: Acer-Maple, Aesculus-Horsechestnut/Buckeye, Salix-Willow, Betula-Birch, Populus-Poplar, Ulmus-Elm, Albiza-Mimosa/Silk Tree, Celtis-Hackberry, Fraxinus-Ash, Platanus-London Planetree, Sycamore, Sorbus-Mountain Ash.

The Contractor must comply with all Federal, State, and City laws pursuant to the handling and disposal of woody organic material that is host material for the Asian Longhorned Beetle. All wood that is host material for the Asian Longhorned Beetle must be chipped, ground, or shredded inside the quarantine zone to a size of less than one (1") inch in at least two dimensions before it is permitted to leave the quarantine zone. Please refer to Part 139 of the New York State Department of Agriculture and Markets law and contact State personnel for further details.

In addition, Nurseries located within the quarantine zone must comply with State and Federal Law and all Contractors and/or Subcontractors must be certified by the New York State Department of Agriculture and Markets to perform work within the Quarantine Zone.

(A) REMOVAL

Removal of trees, for disposal away from the site, must consist of topping, felling, removing and disposing of the entire tree, including the stump and root system, to a minimum depth of three (3') feet below the existing adjacent grade, unless otherwise required.

Removal of tree stumps, for disposal away from the site, must consist of removing and disposing of designated existing stumps over six (6") inches in diameter. Stumps must be defined as the lower end of a tree or plant remaining in the ground after most of the stem or trunk has been cut off by others prior to the start of work. All stumps six (6") inches in diameter and under must be removed in accordance with the requirements of **Section 6.01**.

Removal of trees and tree stumps must include all necessary excavation of materials of whatever nature encountered; backfilling of excavations with acceptable material; and disposing of trees and stumps away from the site, as herein specified or as directed by the Engineer.

(B) TRANSPLANTING (up to four (4") inch caliper)

Transplanting must consist of the removal of existing trees; re-planting at new locations; establishing trees at new locations as provided in Section 4.10; storing on the site for later replanting; or delivering removed trees to such locations, away from the site, as the Engineer must direct.

Transplanting must include all necessary digging, bailing, burlapping, platforming, hauling, handling and heeling-in; and, when necessary or directed, re-digging, re-balling, re-burlapping, re-hauling and re-handling of trees designated to be transplanted and establishing said trees as provided in Section 4.10.

(C) PLANTING

Planting must consist of furnishing, when required; delivering; hauling; handling and planting; and establishing of new trees at locations shown on the Contract Drawings or directed by the Engineer.

Planting must include, but not be limited to, all labor, materials, plant and equipment required for excavation of all materials of whatever nature encountered; furnishing topsoil; placing topsoil in new tree pits; constructing tree wells; staking, spraying, pruning, protecting and establishing all trees; and furnishing and installing all other incidentals required for the proper performance of the work; all, in accordance with the Contract Drawings, the specifications and the directions of the Engineer.

The Contractor must obtain and submit to the Engineer the required NYCDPR permit for trees planted in the Right-Of-Way.

All references to tree pits will also include green infrastructure practices, where applicable.

4.16.3. GENERAL.

(A) REMOVAL

A permit must be obtained from the Department of Parks and Recreation (NYCDPR) prior to the removal of any tree.

Trees which are wholly or partly within roadway areas must be removed. Trees wholly within sidewalk areas must only be removed when permitted by NYCDPR. Trees on abutting properties must be removed when shown on the Contract Drawings or when directed by the Engineer.

Tree stumps must be removed when directed.

(B) LANDSCAPE CONTRACTOR

All work must be done by competent Landscape Contractors acceptable to the Engineer.

(C) PLANTING OPERATIONS

1. Tree planting must commence at the first available planting season but no later than at 50% of contract duration period milestone and all newly planted trees must be protected from adjacent construction as required for existing trees in accordance with the requirements of Section 4.22. Trees must be transplanted and/or planted only while dormant in the season as the Engineer may direct. Container-grown

trees, other than street trees, may be planted at other times, with prior written approval of the Engineer in consultation with the client agency. Tree planting operations must be done in accordance with the following specifications. Spring planting must commence no earlier than March 1st and finish no later than May 15th. Fall planting must proceed from October 1st through December 15th, unless otherwise directed by the Engineer and permitted by NYCDPR. Some species, such as the B&B evergreens, should not be planted later than November 1st. The Contractor should be aware of any tree species in use that have fall planting hazards, and schedule planting accordingly.

2. Upon the Engineer's determination that it is impracticable or impossible to plant all required new trees or transplant all required existing trees or any smaller number of them within a planting season which falls within the contract time, Substantial Completion may be issued, provided the Contractor deposits with the Commissioner a sum of money equal to eighty (80) percent of the contract price bid for each tree not then planted or transplanted, to cover the cost of furnishing or removing the tree; its planting or transplanting, as specified; and establishment per Section 4.10. Proof of the deposit must be submitted to the Engineer.

3. The Contractor, however, will be required to excavate the tree pits to size and furnish and place topsoil in accordance with the requirements of the specifications. Such tree pits, in areas subject to pedestrian traffic and where directed by the Engineer, must have the topsoil overlaid with a two (2") inch thickness of binder to be paid for under Item No. 4.02 CA or 4.02 CB (as provided in the Bid Schedule). Tree pits should not be dug until the tree is on site, to ensure proper hole depth.

4.16.4. MATERIALS.

(A) TREES

1. Plant Schedule

Type and size of trees to be planted must be as specified in the Bid Schedule or as shown on the Contract Drawings.

NOTE: All trees, except as otherwise permitted by the Engineer due to non-availability in certain species, must have single straight trunks with leader intact, and symmetrical, well-branched tops.

Trees having limb cuts over three-quarters (3/4) of an inch on nursery-grown trees or over one and one-half (1-1/2") inches on collected trees which have not completely calloused over will not be accepted.

Heavy fibrous root system is essential. Heavy crown shearing will not be accepted, and no shearing is preferred.

2. Names

Plant names must agree with the nomenclature of "Standardized Plant Names" as adopted by the American Joint Committee on Horticultural Nomenclature 1942 edition: size and grading standards must conform to those of the American Association of Nurserymen *American Standards for Nursery Stock*, current edition, at the time of bid, unless otherwise specified. No substitutions shall be permitted except by written permission of the Engineer. The Contractor must provide the Engineer with written confirmation of availability by the supplying nursery or the request for similarly confirmed substitutes two months before intended planting season. All tree cultivars, patented or otherwise, must be certified by the supplying nursery. All nurseries must be required to have a registration certificate from the New York State Department of Agriculture & Markets, Division of Plant Industry, certifying that plant material

is free from injurious insect and plant diseases. A similar certificate must be required from other states where plant material is obtained.

3. Quality

All trees must be typical of their species or variety. They must have normal well-developed branches and a vigorous fibrous root system. They must be sound, healthy, vigorous trees, free from defects, disfiguring knots, sunscald injuries, abrasions of the bark, plant diseases, insect eggs, borers and all forms of infestations. Containerized material must be free from girdling roots. Trees must not have damaged or missing leaders, multiple leaders, Y-crotches, or indications of topping or heading back. All trees including replacement trees must be inspected and tagged at the nursery prior to digging and planting. All trees must be nursery grown and must have been growing under the same climatic conditions as those occurring in New York City for at least two (2) years prior to date of the contract. Trees held in storage must be rejected if they show signs of growth during storage. All trees must be limbed up to a minimum of five feet (5') from the ground. The Contractor is responsible for ensuring that trees have been grown at the proper depth. Evergreens should be container-grown when possible.

4. Dimensioning

A tree must be dimensioned as it stands in the nursery, and must be calipered at a point six (6") inches above the ground for trees six (6") inches or less in diameter. The stock furnished must be a fair average of the minimum and maximum sizes specified.

5. Preparation for Shipping

Care must be exercised in digging and precautions customary in good trade practice must be taken in preparing trees for shipment and transplanting. Workmanship that fails to meet the highest standards will be rejected and the Contractor must replace the damaged or rejected stock with acceptable material at no additional cost to The City. Trees must be dug to retain as many fibrous roots as possible and immediately before moving, unless otherwise specified. Balled and burlapped trees must have a solid ball of earth securely held in place with biodegradable burlap and stout rope or wire baskets. No manufactured balls will be accepted. If the specified tree size is unavailable, oversize trees may be substituted at no extra cost to the City. The root flare must not be covered with soil when the tree is balled and burlapped.

Ball diameters must be not less than the following:

Tree Caliper	Minimum Root Ball Diameter
from 2-1/2" to under 3"	30"
from 3" to under 3-1/2"	36"
from 3-1/2" to under 4"	42"
from 4" to under 4-1/2"	46"
from 4-1/2" to under 5"	52"
from 5" to under 6"	60"

6. Shipments and Certification

All plants must be packed, transported and handled with utmost care and in such manner as to insure adequate protection against desiccation, climatic, seasonal and other injuries. When transported in closed vehicles, plants must receive adequate ventilation to prevent sweating.

When transported in open vehicles, plants must be protected by tarpaulins or other suitable cover material. Unloading must be carefully done to prevent injury to plants. Balled and burlapped trees must be set on the ground and balls covered with mulch if not immediately planted. Until planted, all materials must be properly maintained and kept adequately watered. Each shipment must be certified by the State and Federal Authorities to be free from disease and infestation. Any inspection certificates required by law to this effect must accompany each shipping invoice or order of stock and on arrival, the certificate must be filed with the Engineer. Plants from areas infested with London Plant Disease or Canker must be accompanied by a certificate stating that the trees are free from these infestations.

Trees pre-tagged at the nursery by NYC DPR will be preferred for street trees.

7. Inspection

Inspection of plants may be made before digging if the Engineer directs but no shipment of plant materials must be planted by the Contractor until such material has been inspected by the Engineer at the site of the work. All rejected material must be immediately removed from the site and replaced with acceptable material at no additional cost. Final inspection will be made as described in Section 4.10.

(B) TOPSOIL

Topsoil must comply with the requirements of Section 2.26. All references in this Section to topsoil will include a different planting medium, such as engineered soil or sand, where applicable.

(C) MULCH

Mulch must be a natural forest product of at least 98% bark containing less than 2% wood or other debris. It must be of White or Red Fir and/or Pine bark of a uniform grade with no additives or any other treatment. Size of bark must be from 5/8" to 1-1/4". The pH factor should range from 5.8 to 6.2. Shredded bark may also be used. Samples must be submitted to and approved by the Engineer prior to use.

Shredded bark mulch must be applied to the surface of tree pit areas, as shown on the Contract Drawings and as directed by the Engineer. Mulch must be applied to a uniform depth of three (3) to four (4) inches over the tree pit, and must be so distributed as to create a smooth level cover over the exposed soil. If jute mesh is specified in the Contract Drawings or Standard Drawings, it will be used in place of mulch.

(D) WATER

If conditions do not allow the use of New York City water sources, the Contractor must obtain its own source of water.

(E) MYCORRHIZAL FUNGI INOCULANT

Mycorrhizal fungi inoculant must be applied by means of a three ounce (3 oz.) premeasured dry formulation packet, such as Mycor Tree Saver Transplant®, as manufactured by Plant Health Care, Inc., Pittsburgh, PA; Rhizanova Tree Transplant, as manufactured by Becker Underwood, Inc., Ames, IA; DIEHARD®, as manufactured by Horticultural Alliance and distributed through Atlantic Irrigation, White Plains, NY; or, an approved equivalent. Packets must contain, as a minimum: one thousand (1,000) live spores of Vesicular-Arbuscular fungi, including: *Entrephosphora columbiana*, *Glomus clarum*, *Glomus etunicatum*, and *Glomus sp.;* seventeen million five hundred thousand (17,500,000) live spores of Ectomycorrhizal fungi, including: *Pisolithus tinctorius*; biostimulants including *Yucca schidigera* extract; soluble sea

kelp extract derived from *Ascophylum nodosum*; humic acids; and acrylamide copolymer gel as a water absorbent medium.

Inoculant must be added after the trees have been placed in their hole. Three (3) packets for each 2-1/2" to 3" caliper tree and four (4) packets for each 3-1/2" to 4" caliper tree must be added to the top six to eight inches (6 to 8") of backfill soil added to each pit and thoroughly mixed to distribute the inoculant. The opened packets must be given to the Engineer at the end of each day. Mycorrhizal inoculant is a dated material and must be used before it expires.

The material must be applied according to the following chart:

Size of rootball or container	Ounces per plant
30" B&B	9
36" B&B	12
42" B&B	12

(F) WATER RETENTION ADDITIVE

Water retention additives must be a granular polyacrylamide polymer of a potassium base and not a sodium base that slowly releases water into the root zone such as Terra Sorb®, as manufactured by Plant Health Care, Inc., Pittsburgh, PA; Soil Moist™ as manufactured by JRM Chemical, Inc., Cleveland, OH; or, an approved equivalent. The water retention additive must be applied at the time of planting during a dry planting season as defined by the Department of Parks and Recreation. Each tree must receive three (3) ounces or an amount specified by the product instructions. When planting shrubs, perennials or annuals, apply as per product instructions.

(G) BURLAP

Burlap must be a natural bio-degradable fabric. No nylon or other synthetic burlap will be permitted.

(H) CORD OR ROPE

Cord or rope must be natural, bio-degradable sisal twine. Nylon or other synthetic rope will not be permitted.

4.16.5. METHODS.

(A) TREE REMOVAL

1. All tree removals must be completed by a tree company approved by NYCDPR, and said company must obtain the necessary permits from NYCDPR before undertaking any removal work.

2. Trees to be removed but not designated to be transplanted, must be completely removed, including the root systems, to a depth of not less than three (3') feet below the existing adjacent grade. After removal, the Contractor must dispose of said trees, away from the site. The disposal of trees by burning in open fires will not be permitted.

3. The topping of a tree without the immediate removal of its trunk will not be permitted. Once the Contractor initiates removal of a tree, the operation must continue without interruption to a height no greater than six (6") inches above existing grade. The remaining tree stump and root system may be removed during another operation subject to approval of the Engineer; however, the cost of removal and disposal of the remaining tree stump and root system must be deem included in the price bid for tree removal.

(B) STUMP REMOVAL

1. Tree stumps designated to be removed and their roots must be completely excavated to a minimum depth of three (3) feet below the existing grade. A portable stump cutter may be required in some locations. It may be necessary to remove concrete, asphalt, pavers, and/or other types of material surrounding the base of the stump. All excess debris, including chips from tree stumps, must be removed and disposed of by the Contractor, away from the site prior to backfilling and the area must be restored by completion of the workday, to the satisfaction of the Engineer. The disposal of tree stumps by burning in open fires will not be permitted.

2. All voids and excavations left after the removal of the stump and roots must be backfilled to grade with clean earth fill. Fill must be placed and compacted to a minimum of 95 percent of Standard Proctor Maximum Density by acceptable methods to the satisfaction of the Engineer. Where paving blocks exist, they are to be reset to the existing grade as directed.

3. Maximum safety and care must be used by Contractor during stump removal. The Contractor must carefully protect against damage all existing trees, plants, curbs, sidewalks and utilities and other features to remain. The Contractor is responsible for locating and protecting underground utilities from damage during stump removal procedures. During stump grinding operations, plywood must be used to protect adjacent vehicles, real property, and pedestrians. If, when removing stumps, existing sidewalks or curbs are disturbed, the Contractor must restore and/or reset these sidewalks and curbs, at no additional cost to the City. Restoration work must be done to match the existing, to the satisfaction of the Engineer. All damaged trees, curbs, sidewalks, real property, vehicles and utilities must be addressed within three (3) days.

(C) TRANSPLANTING

1. The Contractor will transplant trees, establish, and replace all trees as specified, in accordance with the plans, the specifications, and directions of the Engineer. All transplanting must be completed by a tree company approved by NYCDPR, and said company must obtain the necessary permits from NYCDPR before undertaking any removal work

2. The Contractor will be liable for any damages to property by transplanting operations and all areas disturbed must be restored to their original condition, to the satisfaction of the Engineer.

3. Preparation of Plants: All precautions customary in good trade practice will be taken in preparing plants for moving, and workmanship that fails to meet the highest standards will be rejected. All plants must be dug immediately before moving unless otherwise directed. All plants must be dug to retain as many fibrous roots as possible. Plants must be balled and burlapped having a solid ball of earth of minimum specified size according to the American Association of Nurserymen Standards (November 1996) securely held in place by burlap and sisal twine. Root balls require Drum Lacing and must be laced with three (3) ply sisal. All root balls must be inspected by the Engineer before moving. Loose, broken, and wire caged balls will be rejected. All rejected material must be immediately removed from the site and replaced with acceptable material at no additional cost.

4. Time of Transplanting: Unless otherwise approved by the Engineer, transplanting will be in the following timeframes:

Season	Tree Transplanting
Spring	March 1 to May 15
Fall	October 1 to December 15

5. Excavation of Planting Pits: Sizes of planting pits must be determined by the Engineer, in consultation with the Contractor's Tree Consultant.

6 Planting: No transplanting shall be done except in the presence of the Engineer.

7. Replacement: The Contractor must replace in accordance with the contract plans and specifications any transplanted trees that are dead or, in the opinion of the Engineer in consultation with the Tree Consultant, are in an unhealthy or unsightly condition, and/or have lost their natural shape due to dead branches, excessive pruning, inadequate or improper maintenance, or other causes.

8. Care must be exercised in digging and preparing trees for transplanting. Each tree must be dug with sufficient roots and must have a solid ball of earth securely held in place by burlap and stout rope and must be platformed. No manufactured balls will be accepted. Each tree must be dug with a ball of earth not less in diameter than that specified for new trees. The root ball must be moist before digging, and at a minimum be watered by the Contractor no later than the day before digging.

9. Trees to be stored on the site for later replanting must be prepared as in the preceding paragraph, hauled to a location to be designated by the Engineer and heeled-in at such location to the satisfaction of the Engineer until replanting may be progressed. At the time of replanting, heeled-in trees must be dug up and hauled to the replanting or delivery location. When required by the Engineer, heeled-in trees must be re-balled, re-burlapped or re-platformed before hauling to the replanting location or delivery point.

10. The Contractor must haul and deliver designated trees, prepared for transplanting or replanting as above, to such locations on or away from the site at the direction of the Engineer.

11. Trees designated to be transplanted, damaged due to the Contractor's operations, must be replaced with new trees, by the Contractor, to the satisfaction of the Engineer at no additional cost to The City.

12. Hauling and unloading of trees to be transplanted, must be carefully done to prevent injury. All trees transplanted, or to be transplanted, must be protected by the Contractor and such trees as are injured or removed before the acceptance of the work must be replaced with new trees at the expense of the Contractor.

13. At the time of transplanting and as described in Section 4.10, the soil around each tree must be thoroughly saturated with water during the establishment period. Trees that are not watered the day of transplanting to the satisfaction of the Engineer will be rejected. Precipitation is not an acceptable substitute for watering on the day of transplanting.

14. The Contractor must perform all services described in Section 4.10 to establish the trees during the Establishment Period.

15. The work of planting trees designated to be transplanted and trees furnished as replacements for injured trees must be as specified in (D), below.

(D) PLANTING

All tree planting must be completed by a tree company approved by NYCDPR, and said company must obtain the necessary permits from NYCDPR before undertaking any removal work

1. Excavation for Tree Pits

The Contractor must excavate all materials of whatever nature encountered (except excavation of boulders in open cut and ledge rock) for all tree pits to a minimum depth of twenty-four (24") inches, but not more than the depth of the root ball, so that the hole depth matches the actual depth from the bottom of the root ball and the top of the root flare.

For street trees, the pits must be made as large as possible as determined by the Engineer, in accordance with the New York City Department of Transportation's Standard Details of Construction Standard Drawing No. H-1046, unless otherwise shown on the Contract Drawings, and the items provided in the Bid Schedule. For trees to be planted in open areas, the excavated pit must be three (3) time the diameter of the rootball. All pits must have vertical sides unless otherwise directed. The Contractor must scar the surface of the excavated pit walls to avoid the smooth glaze created by machinery.

No plant pits must be dug until the proposed locations have been staked on the ground by the Contractor and approved by the Engineer; no plant pits shall be backfilled until approved by the Engineer. Subsoil from planting excavation must be removed from the site and disposed of as directed by the Engineer. The area is to be made safe and secure at the end of the work day.

2. Backfilling for Tree Pits

Backfill for tree pits must consist of topsoil.

3. Barricades

During excavation and planting operations, all pits, trees, and planting materials must be protected carefully with strong, well-constructed temporary barricades, where required, to the satisfaction of the Engineer. Any material which for any cause is damaged during operations must be replaced by the Contractor at no cost to The City, with the same size, type and quality approved by the Engineer.

4. Planting

No planting shall be done except in the presence of the Engineer or the Engineer's authorized representative. All trees must stand, after settlement, at the same levels at which they have grown, i.e., at the base of the trunk flare. Care must be exercised in setting the trees plumb. Ropes, stones, etc., must be removed from the holes before backfilling; and all topsoil for backfilling must be loose and friable and not frozen.

All girdling roots must be removed. Circling roots must be separated and spread out to not impede future growth. Place balled and burlapped material in the prepared planting pit by lifting, and carry it by the rootball so that the ball will not be loosened. Set the tree straight and in the center of the pit with the most desirable side facing toward the predominant view. The Contractor's attention is called to the different widths of curbs and that a uniform distance

must be maintained from the center of the tree to the outside of the curb, or as directed by the Engineer, in consultation with the Contractor's Tree Consultant. All trees must set, after settlement, at the level of the base of the trunk and the beginning of the roots known as the "trunk flare." If the top of the rootball is not consistent with this area, soil will be added or removed to make it so, and the depth of the planting site adjusted accordingly. Care must be exercised in setting the trees plumb.

Cut and remove rope or wire from the top two-thirds (2/3) of the rootball. Remove as much woven product and twine as possible Remaining lateral wires must be cut to prevent future root interference. Wire must not be galvanized or aluminum wire.

At least two-thirds (2/3) of the burlap must be removed from the tree pit and the remaining burlap pulled back and adjusted to prevent the formation of air pockets. Where directed by the Engineer, in consultation with the Contractor's Tree Consultant, the burlap must be entirely removed. All ropes, stones, etc. must be removed from the planting site before backfilling. Backfilling mixture must be loose and friable, and not frozen. Soil must be firmed at six (6) to eight (8") inch intervals and thoroughly settled with water.

5. Tree Wrap

No tree trunks shall be wrapped. The Contractor shall be required to remove all nursery tags and protective wrapping prior to planting to allow inspection by the Engineer.

6. Staking of Trees

All staking of trees must be done during planting operations and stakes must be maintained completion of the establishment period described in Section 4.10. Trees must stand plumb after staking. Stakes must be removed by the Contractor after completion of the establishment period and prior to the final acceptance of the work.

All trees must be supported by two (2) stakes. Stakes for street trees must be parallel to the curb. Stakes must be eight (8') feet long of white cedar with bark attached and must show no sign of cracking or decay. They must have a maximum allowable deflection of ten (10%) percent. If the stakes are not long enough to produce secure supports, the Contractor must, when so directed by the Engineer, furnish and install longer stakes for the purpose, at no additional cost to the City. Stakes must have a diameter at the middle of not less than two (2") inches nor more than two and three-quarter (2-3/4") inches and a diameter of not less than one and three-quarter (1-3/4") inches at the tip nor more than three (3") inches at the butt.

Stakes must be driven about thirty (30") inches into the ground and fastened securely to the trees with a suitable length of three-quarter (3/4") inches wide, flat, woven polypropylene material such as Arbortie™ as manufactured by DeepRoot®, San Francisco, CA; Arborbrace Tree-tie Webbing as manufactured by Arborbrace Staking Systems, Inc., Miami, Fl. 33156, tel. (305) 992-4104; TreeTie™ as manufactured by Nelco, 22 Riverside Dr., Pembroke, MA. 02359, tel. (800) 491-2812; or, an approved equivalent that is knotted or nailed to the stakes with one (1") inch galvanized roofing nails as directed by the Engineer. No wire or hose is to be used to stake trees.

All stakes must be driven about one (1') foot away from the trunk face, taking care to stay clear the root ball.

7. Pruning

Only dead, crossing, broken or badly bruised branches must be removed by pruning with a clean cut. All pruning must be done with sharp tools. At the time of planting, pruning cuts must be made at the base of the branch at such a point and angle that neither the branch collar nor the bark of the stem is damaged, and that no branch stub extends from the collar.

Crowns of young trees must not be cut back to compensate root loss. No leaders must be cut. All pruning must be done in the presence of and at the direction of the Tree Consultant.

8. Watering

At the time of planting, the soil around each tree must be thoroughly saturated with at least twenty (20) gallons of water. Soil must be firmed at six (6) to eight (8") inch intervals and thoroughly settled with water. During the establishment period, watering must conform to the specifications provided under Section 4.10. Water must be free from oil, have a pH not less than 6.0 nor greater than 8.9 and must be free from impurities injurious to vegetation. Unless otherwise directed, water may be drawn from mains owned by or supplying water to the City of New York.

Water must not be applied in a manner which damages plants, plant saucers, stakes or adjacent areas. Each plant saucer must be carefully filled with water in a manner which does not erode the soil or the plant saucer. Watering must not cause uprooting or exposure of plant's roots to the air.

9. Concrete Sidewalk

When required for the construction of new tree pits, the Contractor must carefully saw cut existing sidewalk so as not to destroy any sidewalk beyond the limits of the tree pit. Any sidewalk disturbed beyond the limits of the tree pit must be restored by the Contractor at the Contractor's own cost and expense; the restoration to be in accordance with the standard specification for concrete sidewalk.

4.16.6. ESTABLISHMENT. The Contractor must establish planted or transplanted trees as provided under Section 4.10.

4.16.7. REPLACEMENT. The Contractor must replace trees as required by Section 4.10.

4.16.8. MEASUREMENT.

(A) TREE REMOVAL

1. The quantity to be measured for payment shall be the number of trees, four (4") inches or more in diameter, removed and disposed of as shown on the Contract Drawings, as specified and as directed by the Engineer.
2. No payment will be made hereunder for trees removed and disposed of under other Sections or other provisions of this Section when the contract prices bid for the work to be done thereunder includes the cost of removing and disposing of such trees.
3. No direct payment will be made for the removal of trees less than four (4") inches in diameter but the cost thereof will be deemed to be included in all the scheduled contract prices.
4. The removal of existing stumps, including root systems, is provided for elsewhere and no payment will be made hereunder for such removal and disposal.
5. Measurement of the diameter of trees must be made four and one-half (4-1/2') feet above the adjacent ground.

6. A tree having a single root system and more than one trunk at a height four and one-half (4–1/2') feet above the adjacent ground must be considered a multiple-trunk tree. The caliper of a multiple-trunk tree, to be measured for payment, must be the square root of the summation of the squares of the calipers of the several trunks, except that trunks of less than three (3") inch caliper will not be considered or included.

(B) STUMP REMOVAL

The quantity of stump removal to be measured for payment will be the number of stump units of tree stumps over six (6") inches in diameter calculated in accordance with the payment schedule specified under **Subsection 4.16.9**, and the directions of the Engineer.

Measurement of the diameter of each tree stump must be made two (2') feet above the adjacent ground or at the top of the tree stump, whichever is lower.

Tree stumps of trees removed under other contract items must not be measured for payment under this item.

(C) TRANSPLANTING

The quantity to be measured for payment hereunder will be the number of existing trees transplanted and established in accordance with the Contract Drawings, the specifications and the directions of the Engineer.

(D) PLANTING

The quantity to be measured for payment hereunder will be the number of new trees, of each size, furnished, planted and established in accordance with the Contract Drawings, the specifications and the directions of the Engineer.

4.16.9. PAYMENT SCHEDULE FOR STUMP REMOVAL. The Contractor will be paid at the following rates for the different size groups of stumps removed based on the unit bid price for removing a stump over six (6") inches to twelve (12") inches in diameter (base Unit).

STUMP DIAMETER	STUMP UNITS	PAYMENT PER STUMP REMOVED
Over 6" to 12"	1.0 (base Unit)	100% of Unit Bid Price
Over 12" to 18"	1.25	125% of Unit Bid Price
Over 18" to 24"	1.5	150% of Unit Bid Price
Over 24" to 30"	2.0	200% of Unit Bid Price
Over 30" to 36"	2.25	225% of Unit Bid Price
Over 36" to 42"	2.5	250% of Unit Bid Price
Over 42"	3.5	350% of Unit Bid Price

For example, removal of one (1) 16" diameter stump would receive payment for 1.25 stump units, removal of one (1) 36" diameter stump would receive payment for 2.25 stump units and one (1) 26" diameter stump would receive payment for 2.0 stump units for a total of 5.50 stump units.

4.16.10. PRICES TO COVER.

(A) TREE REMOVAL (UNIT PRICE)

The contract price shall be a unit price per existing tree, of the size specified, removed; and must cover the cost of all labor, materials, equipment, insurance, and incidentals required to complete the work including the necessary excavation of all materials of whatever nature encountered; backfilling of excavations with acceptable material; and the disposal of removed

trees; all, together with necessary incidentals, in accordance with the Contract Drawings, the specifications and the directions of the Engineer.

Additional trees to be removed and disposed of from abutting properties at the direction of the Engineer, when such removal and disposal is not shown on the Contract Drawings, will be measured and paid for in accordance with Provisions 4.16.8.(A).

(B) STUMP REMOVAL

The contract price per each stump unit must cover the cost of all labor, materials, equipment, insurance, and incidentals necessary to remove stumps, including, but not limited to, disposal of any generated material and required fees for disposal, borrowed fill, restoration of walks and curbs disturbed by this operation, maintenance and repair of utilities and all other incidentals necessary to complete the work in accordance with the specifications to the satisfaction of the Engineer.

The stump diameter must be measured in the presence of the Engineer.

Stumps 6" diameter and under must be removed in accordance with the requirements of **Section 6.01**, "**Clearing and Grubbing**".

(C) TRANSPLANTING

The contract price for transplanting will be a unit price per tree and will cover the cost of all labor, material, plant, equipment, insurance, and incidentals necessary to complete the work of transplanting existing trees, including their establishment, as shown on the Contract Drawings, as specified and as directed by the Engineer.

The cost of furnishing and incorporating topsoil in tree pits, and spreading mulch over tree pits is also included in the unit price bid for each transplanting item.

The Contractor will be paid the unit price for transplanting in the following percentage increments as described in Section 4.10:

1) 40% - Initial Planting
2) 30% - Initial Inspection Successful, or Re-Planting
3) 30% - Second Inspection Successful, or Re-Planting

The Contractor will only be paid for the work completed; if the Contractor does not successfully complete the establishment period, no payment will be made for the percentage increments not completed. Completion of the establishment period includes completion of all establishment period tasks (post planting care items).

(D) PLANTING

The contract price for planting will be a unit price per tree and will cover the cost of all labor, materials, plant, equipment, inspections, insurance, and incidentals necessary to complete the work of planting new trees, including their establishment, as shown on the Contract Drawings, as specified and as directed by the Engineer.

The cost of furnishing and incorporating topsoil in tree pits, and spreading mulch over tree pits is also included in the unit price bid for each planting item.

The Contractor will be paid the unit price for planting in the following percentage increments as described in Section 4.10:

4) 40% - Initial Planting
5) 30% - Initial Inspection Successful, or Re-Planting
6) 30% - Second Inspection Successful, or Re-Planting

The Contractor will only be paid for the work completed; if the Contractor does not successfully complete the establishment period, no payment will be made for the percentage increments not completed. Completion of the establishment period includes completion of all establishment period tasks (post planting care items).

Payment will be made under:

Item No.	Item	Pay Unit
4.16 AA	TREES REMOVED (4" TO UNDER 12" CALIPER)	EACH
4.16 AB	TREES REMOVED (12" TO UNDER 18" CALIPER)	EACH
4.16 AC	TREES REMOVED (18" TO UNDER 24" CALIPER)	EACH
4.16 AD	TREES REMOVED (24" CALIPER AND OVER)	EACH
4.16 ADE	TREES REMOVED (24" TO UNDER 48" CALIPER)	EACH
4.16 AE	TREES REMOVED (48" CALIPER AND OVER)	EACH
4.16 BA	TREES PLANTED, 2-1/2" TO 3" CALIPER, ALL TYPES	EACH
4.16 CA	TREES PLANTED, 3" TO 3-1/2" CALIPER, ALL TYPES	EACH
4.16 DA	TREES PLANTED 3-1/2" TO 4" CALIPER, ALL TYPES	EACH
4.16 AAT	TREES TRANSPLANTED, UP TO 4" CALIPER, ALL TYPES	EACH
4.16 BA405	TREES PLANTED, 2-1/2" TO 3" CALIPER, ALL TYPES, IN 4' X 5' TREE PITS	EACH
4.16 BA505	TREES PLANTED, 2-1/2" TO 3" CALIPER, ALL TYPES, IN 5' X 5' TREE PITS	EACH
4.16 BA510	TREES PLANTED, 2-1/2" TO 3" CALIPER, ALL TYPES, IN 10' X 5' TREE PITS	EACH
4.16 CA405	TREES PLANTED, 3" TO 3-1/2" CALIPER, ALL TYPES, IN 4' X 5' TREE PITS	EACH
4.16 CA505	TREES PLANTED, 3" TO 3-1/2" CALIPER, ALL TYPES, IN 5' X 5' TREE PITS	EACH
4.16 CA510	TREES PLANTED, 3" TO 3-1/2" CALIPER, ALL TYPES, IN 5' X 10' TREE PITS	EACH
4.16 DA405	TREES PLANTED, 3-1/2" TO 4" CALIPER, ALL TYPES, IN 4' X 5' TREE PITS	EACH
4.16 DA505	TREES PLANTED, 3-1/2" TO 4" CALIPER, ALL TYPES, IN 5' X 5' TREE PITS	EACH
4.16 DA510	TREES PLANTED, 3-1/2" TO 4" CALIPER, ALL TYPES, IN 5' X 10' TREE PITS	EACH
4.16 EA405	TREES PLANTED, 4" TO 4-1/2" CALIPER, ALL TYPES, IN 4' X 5' TREE PITS	EACH
4.16 EA505	TREES PLANTED, 4" TO 4-1/2" CALIPER, ALL TYPES, IN 5' X 5' TREE PITS	EACH
4.16 EA510	TREES PLANTED, 4" TO 4-1/2" CALIPER, ALL TYPES, IN 5' X 10' TREE PITS	EACH
4.16 CAT405	TREES TRANSPLANTED, 3" TO 3-1/2" CALIPER, ALL TYPES, IN 4' X 5' TREE PITS	EACH
4.16 CAT505	TREES TRANSPLANTED, 3" TO 3-1/2" CALIPER, ALL TYPES, IN 5' X 5' TREE PITS	EACH
4.16 CAT510	TREES TRANSPLANTED, 3" TO 3-1/2" CALIPER, ALL TYPES, IN 5' X 10' TREE PITS	EACH
4.16 DAT405	TREES TRANSPLANTED, 3-1/2" TO 4" CALIPER, ALL TYPES, IN 4' X 5' TREE PITS	EACH

4.16 DAT505	TREES TRANSPLANTED, 3-1/2" TO 4" CALIPER, ALL TYPES IN 5' X 5' TREE PITS	EACH
4.16 DAT510	TREES TRANSPLANTED, 3-1/2" TO 4" CALIPER, ALL TYPES IN 5' X 10' TREE PITS	EACH
4.16 *xxxxxx*	TREES PLANTED, (*Size and type of tree and tree pit size as specified in Bid Pages*)	EACH
4.16 *xxxxxx*	TREES TRANSPLANTED, (*Size and type of tree and tree pit size as specified in Bid Pages*)	EACH
4.16 STUMP	STUMP REMOVAL	UNIT

Note: *xxxxxx* denotes serialized pay item.

SECTION 4.17 - SHRUBS AND GROUNDCOVER

4.17.1. INTENT. This section describes the planting of shrubs and groundcovers.

4.17.2. DESCRIPTION. The Contractor and/or subcontractors must be certified by the New York State Department of Agriculture & Markets to perform work within the Asian Longhorned Beetle Quarantine Zone. The Contractor must review and abide by the description of the quarantine and compliance agreements as presented in the publication entitled Part 139 of the New York State, Department of Agriculture & Markets law. Full information can be obtained from Federal and State Pest Control personnel. Quarantine areas, for the purpose of this contract shall be defined as all five Boroughs of the New York City.

Due to current Federal and New York State laws and regulations concerning Asian Longhorned Beetle management, the following host species may not be planted in the quarantine zone. Host species are as follows: Acer-Maple, Aesculus-Horsechestnut/Buckeye, Salix-Willow, Betula-Birch, Populus-Poplar, Ulmus-Elm, Albiza-Mimosa/Silk Tree, Celtis-Hackberry, Fraxinus-Ash, Platanus-London Planetree, Sycamore, Sorbus-Montain Ash.

The Contractor must comply with all Federal, State, and City laws pursuant to the handling and disposal of woody organic material that is host material for the Asian Longhorned Beetle. All wood that is host material for the Asian Longhorned Beetle must be chipped, ground, or shredded inside the quarantine zone to a size of less than one (1") inch in at least two dimensions before it is permitted to leave the quarantine zone. Please refer to Part 139 of the New York State Department of Agriculture and Markets law and contact State personnel for further details.

In addition, Nurseries located within the quarantine zone must comply with State and Federal Law and all Contractors and/or Subcontractors must be Certified by the New York State Department of Agriculture and Markets to perform work within the Quarantine Zone.

Planting shall consist of the furnishing, delivering, hauling, handling and planting, and establishing of new shrubs and groundcover at locations shown on the Contract Drawings or directed by the Engineer.

Planting must include all labor, materials, plant and equipment required for all excavation of all materials of whatever nature encountered (except excavation of boulders in open cut and ledge rock); furnishing soil amendments and topsoil; incorporating soil amendments into topsoil; placing topsoil and incorporated soil amendments in new shrub and groundcover beds; fertilizing; spraying, pruning, protecting and establishing all plants; and furnishing and installing all other incidentals required for the proper performance of the work; all, in accordance with the Contract Drawings, the specifications and the direction of the Engineer.

4.17.3. GENERAL. Requirements for Landscape Contractor and Planting Operations must comply with the requirements of **Subsection 4.16.3.**

4.17.4. MATERIALS.

(A) PLANT MATERIAL

Type and size of plants must be as specified in the Bid Schedule or as shown on the Contract Drawings.

Requirements for Plant Names, Quality, Dimensioning, Preparation for Shipping, Shipments, Certification and Inspection must comply with **Subsection 4.16.4.** The word "SHRUB" as used herein must include all groundcover, vines and other planting materials required, except for plant material listed under Item Nos. starting with "4.16" and Item Nos. 4.19 and 4.20.

All plants must be typical of their species or variety and nursery-grown, unless otherwise stated. They must have normal, well-developed branches and vigorous fibrous root systems. They must be sound, healthy, vigorous plants free from defects, disfiguring knots, sun scald injuries, dead or broken branches, abrasions of the bark, plant diseases, insect eggs, borers, and all forms of infestation. All plant material must be delivered in pots, pans, or other containers, or balled and burlapped. Containerized material must be free from girdling roots. Bare root plant material, as well as any other plant material not meeting the above requirements, delivered to the site will be rejected. All rejected material must be removed from the site and replaced with acceptable material at no additional cost to the City.

All shrubs must have been grown under similar climatic conditions as the project site two (2) years prior to the date of the project. Plants held in storage will be rejected if they show signs of growth during storage. Collected plants must be taken from a soil favorable to good root development. All collected materials must be clean sound stock, free for decaying stumps.

Herbaceous plants, vines, and groundcover must be vigorous healthy plants, a minimum two (2) years old, from cuttings, seed, or division, with well-developed root systems and crowns, as specified in the Plant Schedule. Bulbs, corms, tubers and rhizomes must be firm, non-desiccated, and certified free of disease and viral infection, of the sizes, grades, and varieties indicated in the Plant Schedule.

PLUGS shall be delivered, stored and protected from drying winds and direct sunlight. Store plugs in shaded locations and maintain moist packing soil until planting. Plugs shall be thoroughly rooted through the container. Acceptable sizes are: LP50 - plant palette generally contains forb and grass species with taproots or deep fibrous root systems, 5.00" deep by 2.00" square and come 50 to a standard nursery liner; LP32 - plant palette generally contains species with lateral root systems with fibrous and shallowly rooted species, 4.00" deep by 2.22" square and come 32 per to a standard nursery liner.

There shall be no substitution of plant types by the Contractor without prior written approval by the Engineer.

(B) TOPSOIL

Topsoil must comply with the requirements of **Section 2.26**. All references in this Section to topsoil will include a different planting medium, such as engineered soil or sand, where applicable.

(C) COMPOST

Compost must contain organic matter, or material of generally humus nature capable of sustaining the growth of vegetation, with no admixture of refuse or material toxic to plant growth. The Compost must be free of pathogens and stones, lumps, or similar objects larger than two (2") inches in greatest diameter, as well as roots, brush, and weeds.

Composts that have been derived from organic waste such as food and agriculture residues, animal manures, and sewage sludge that meet the above requirements, and are approved by the New York State DEC, are acceptable compost sources. Compost must have an approximate N-P-K analysis of at least 1-1-0 as delivered, with a pH between 5.5 and 8.5 and a solids content of at least fifty (50%) percent. Compost must have a minimum of fifty (50%) percent organic material.

Compost must be "Nature's Choice Compost" by Nature's Choice Corp., Union, NJ, or an approved equivalent. For areas that are <u>not</u> community gardens, Contractor may also substitute an organic biosolid humus such as "Landscapers' Advantage™" Class A compost

(30 cubic yard minimum), manufactured by J.P. Mascaro & Son, Harleyville, PA; or "AllGro Compost", as manufactured by AllGro, Inc., Hapton, NH; or an approved equivalent.

(D) FERTILIZER

Commercial fertilizer must be a complete fertilizer, part of the elements of which are derived from non-toxic organic sources with low persistence, and must contain the following percentages by weight: nitrogen 5%; phosphoric acid 10%; potash 5%. It must be uniform in composition, dry, free flowing and must be delivered to the site in unopened original containers, all bearing the manufacturer's guaranteed analysis.

Where indicated on the Contract Drawings or where directed by the Engineer, sludge compost must be incorporated in the soil instead of, or in addition to, commercial fertilizer. The amount of sludge compost must be as indicated on the Contract Drawings or directed by the Engineer.

(E) LIME

Lime must be ground dolomitic limestone not less than 85% total carbonated, ground so that 50% passes 100 mesh sieve and 90% passes 20 mesh sieve. Amount of lime must be determined by the soil test and the plant requirements.

(F) BONE MEAL

Bone meal must be firmly ground and have a minimum analysis of 2% nitrogen and 20% phosphoric acid.

(G) HERBICIDE

Herbicide must be equivalent to Balam, as manufactured by Elanco Products Corp., a division of Eli Lilly and Co., Indianapolis, Indiana 46206. Product is a selective preemergence herbicide for the control of crabgrass and other annual weed grasses. Product must be used in planting beds. Product must never be used on new lawns or topsoil designated for seeded areas.

(H) MYCORRHIZAL FUNGI INOCULANT

Mycorrhizal fungi inoculant must be applied by means of a three ounce (3 oz.) premeasured dry formulation packet, such as Mycor Tree Saver Transplant®, as manufactured by Plant Health Care, Inc., Pittsburgh, PA; Rhizanova Tree Transplant, as manufactured by Becker Underwood, Inc., Ames, IA; DIEHARD®, as manufactured by Horticultural Alliance and distributed through Atlantic Irrigation, White Plains, NY; or, an approved equivalent. Packets must contain, as a minimum: one thousand (1000) live spores of Vesicular-Arbuscular fungi, including: *Entrephosphora columbiana*, *Glomus clarum*, *Glomus etunicatum*, and *Glomus sp.;* seventeen million five hundred thousand (17,500,000) live spores of Ectomycorrhizal fungi, including: *Pisolithus tinctorius*; biostimulants including *Yucca schidigera* extract; soluble sea kelp extract derived from *Ascophylum nodosum*; humic acids; and acrylamide copolymer gel as a water absorbent medium.

Mycorrhizal inoculant should be used for planting trees, woody shrubs and woody groundcovers only; it is not needed for herbaceous material. Mycorrhizal fungi inoculant must be added to the top six (6) to eight (8") inches of backfill soil in each planting pit and thoroughly mixed to distribute the inoculant. The opened packets must be given to the Engineer at the end of each day. Mycorrhizal inoculant is a dated material and must be used before it expires.

The material must be applied per the following chart:

Size of rootball or container	Ounces per plant
1 gallon	1

2 gal.	2
3 gal.	3
5 gal.	3
7 gal.	3
10 gal.	3
15 gal.	3
20" B&B	6
24" B&B	9
30" B&B	9
36" B&B	12
42" B&B	12

(I) WATER RETENTION ADDITIVE

Water Retention Additives must comply with the requirements of **Subsection 4.16.4.(F).**

(J) MULCH

Shredded bark mulch must be a natural forest product of at least 98% bark containing less than 2% wood or other debris. It must be of White or Red Fir and/or Pine bark of a uniform grade with no additives or any other treatment. Size of bark must be from 5/8" to 1-1/4". The pH factor should range from 5.8 to 6.2. Shredded bark may also be used. Samples must be submitted to and approved by the Engineer prior to use.

Shredded bark mulch must be applied to the surface of the beds, as shown on the Contract Drawings or as directed by the Engineer. Mulch must be applied to a uniform depth of three (3) to four (4) inches over shrub bed areas and two (2) to three (3) inches over groundcover beds, and must be so distributed as to create a smooth level cover over the exposed soil. Where jute mesh is specified on the Contract Drawings or Standard Drawings, it will be used in place of mulch. Plants must not be covered.

4.17.5. METHODS. Planting methods must comply with **Subsection 4.16.5.(D) PLANTING** with the following exceptions:

(A) TIME OF PLANTING

Unless otherwise directed or approved by the Engineer, Planting must be performed in the following timeframes:

Plant Type	Deciduous Material	Evergreen Material	Plugs
Spring Planting	March 1 to May 1	April 1 to May 15	April 1 to June 1
Fall Planting	October 15 to December 15	September 1 to October 15	September 1 to October 15

(B) EXCAVATION AND PLANTING

No planting shall be done except in the presence of the Engineer. All material must be inspected by the Engineer as it is removed from the truck, prior to placing in an approved storage area or the designated planting site. All rejected material must be removed from the

site and replaced with acceptable material at no additional cost to the City.

Bare root material must be adequately protected from drying out. It must be removed from its plastic bag and planted immediately after inspection. The bundles of heeled-in plants must be set upright on the ground, covered with mulch, and kept adequately moist until the time of installation. Until the time of planting, all plant material must be stored in an approved location, securely fenced and maintained, to the satisfaction of the Engineer, at no additional cost to the City. All plants not planted immediately must be watered as necessary to maintain optimal health until planting.

For containerized material, girdling roots must be removed. Circling roots must be separated and spread out to not impede future growth. All shrubs must be planted in the planting beds previously prepared or, where free standing, in individual pits. Individual shrub pits must be 18" deep and at least one foot wider than the ball of earth or spread of roots. All pits must be circular in outline and dug with vertical sides. The Contractor must scar the surface of the excavated pit walls to avoid a smooth glaze.

Place balled and burlapped material in the prepared planting pit by lifting, and carry it by the rootball. Set shrub straight and in the center of the pit, with the most desirable side facing toward the predominant view. All material must be set, after settlement, at the same level at which they have grown in the nursery, i.e., at the base of the crown. Care must be exercised in setting the plants plumb. All ropes, stones, etc. must be removed from the pit before backfilling. Soil for backfill must be loose and friable and not frozen or compacted. Cut and remove rope or wire from the top two-thirds (2/3) of the rootball and cut off the burlap back to the edge of the ball. Remove as much woven product and twine as possible. All plastic or synthetic fabric must be removed from the ball at the time of planting. Remaining lateral wire must be cut to prevent future root interference. Wire must not be galvanized or aluminum wire. Balled and burlapped plants must be handled so that the ball will not be loosened. After the soil has been thoroughly firmed under and around the ball, the burlap must be cut away from the upper half of the ball, and the remaining burlap must be entirely removed. Soil must be firmed at six (6) to eight (8") inch intervals and thoroughly settled with water.

Plants with exposed roots must be placed in the proper position in the center of the pit after the soil in the bottom of the pit has been firmed. Roots must be arranged in their natural position and existing soil worked in among them, firmed at intervals, and mycorrhizal inoculant and water retention additive worked into the top eight (8") inches of backfill soil in the correct proportions. The plants must then be thoroughly settled in with water. Care must be taken to avoid bruising or breaking the roots when tamping the soil. All large and fleshy roots that are bruised or broken must be pruned, making a clean cut before planting.

Evergreen groundcovers must be planted in 12 inch deep topsoil planting bed consisting of three parts by volume of topsoil thoroughly mixed with one part compost. Fertilizer must be incorporated with the soil before setting out plants, at the rate of one (1) pound of fertilizer to twenty (20) square feet of area. Entire area must be graded so that surface contour is not altered from the overall surface drainage pattern. Apply mulch and herbicide as herein specified.

Vines, Herbaceous, and Groundcover plants must be carefully removed from containers or flats immediately prior to planting and set to the same depths as they were grown in the nursery bed or container, to the correct spacing indicated on the plans. Roots must be arranged to their natural position and topsoil worked in among them, taking care to avoid bruising or damaging the roots, and fertilizer tablets added to the top four (4") inches of backfill soil in the correct proportion for the respective pot size. No later than one hour after planting, all plants must be thoroughly settled in with water.

Annual flowering plants must be carefully removed from the flats or cell-packs to avoid damaging roots or stems and planted in prepared planting beds, at the same depth they were growing in the containers. Soil must be thoroughly firmed around each crown, and plants thoroughly firmed around each crown, and plants thoroughly watered in no longer than one hour after planting.

Bulbs must be planted in the locations indicated on the plans and to the depth and spacing indicated on the Plant Schedule. Spring Flowering Bulbs, Corms, Tubers, and Rhizomes must be planted in late September or October, no more than six (6) weeks before frost. Summer and Fall Flowering Bulbs, Corms, Tubers, Rhizomes and Plugs must be planted in spring, after the last frost, or as directed by the Engineer. Prior to planting, bulbs must be stored in a cool, dry, well-ventilated location for no longer than two (2) weeks before planting.

PLUGS must be planted in soil thoroughly soaked to a depth of 4 inches. They must be planted level with the existing soil grade. Be certain that soil is placed around the plugs and firmed into place. Do not fill around plugs with mulch. Remove plugs by pushing up through bottom liner. Do not pull plant by vegetative material. After planting, water immediately to reduce air pockets and maximize contact between LP roots and soil nutrients

All of the above must be planted according to best horticulture practice.

(C) BACKFILLING

Backfill for shrub beds must consist of topsoil as specified in **Section 2.26**. Commercial fertilizer must be added at the rate of six ounces for each shrub under four (4') feet in height and eight ounces for each shrub four (4') feet in height or over.

(D) FINISHING SURFACE AFTER BACKFILLING

The Contractor must cultivate and rake over finished planting areas and must leave the site in an orderly condition. On level ground or slight slopes, a shallow basin a little larger than the diameter of the plant pit must be left around each plant, as shown on the plans, or as directed by the Engineer. On steep slopes, the soil on the lower side of the plant must be graded in such a manner that it will catch and hold water, as shown on the plans, or as directed by the Engineer. Upon completion of planting, all debris and waste material resulting from the planting operation must be removed from the project area, and the affected area raked and cleaned as necessary. Green Infrastructure practices must be graded as shown on the plans.

All work done in preparing shallow basins or grading of plant pits on steep slopes and regarding and reseeding of plant saucers must be deemed included in the unit price bid per plant. All berms raised for shallow basins in level or gently sloping grass areas must be removed at the end of the establishment period, as well as tree stakes and irrigation bags, if present. This topsoil must be cast evenly over the surrounding grass areas and grass seed sown over the removed berms.

4.17.6. SECURITY. Where indicated on the drawings, various types of shrubs must be secured against theft by the provision and installation of steel anchoring cables, clips, bolts, rubber or plastic cable sheaths, and various anchoring devices, as detailed on the Contract Drawings. No separate payment will be made for this work when it is indicated on the Contract Drawings, the cost of which must be deemed included in the unit price bid for the various shrub planting items.

4.17.7. ESTABLISHMENT. Establishment must comply with the requirements of **Subsection 4.10.**

4.17.8. REPLACEMENT. Replacement must comply with the requirements of **Subsection 4.10.**

4.17.9. MEASUREMENT. The quantity to be measured for payment hereunder must be the number of plants of each species and size, furnished, planted and established in accordance with the Contract Drawings, specifications and directions of the Engineer.

4.17.10. PRICES TO COVER. The contract price for planting must be a unit price per plant of each species and size and must cover the cost of all labor, material, plant, equipment, inspection, insurance, and necessary incidentals required to complete the work of planting new plant materials, including their establishment, as shown on the Contract Drawings, as specified and as directed by the Engineer.

The cost of furnishing and incorporating topsoil, fertilizer and mulch are also included in the unit price bid for each planting item.

The Contractor will be paid the unit price for planting in the following percentage increments as described in Section 4.10:

1) 40% - Initial Planting
2) 30% - Initial Inspection Successful, or Re-Planting
3) 30% - Second Inspection Successful, or Re-Planting

The Contractor will only be paid for the work completed; if the Contractor does not successfully complete the establishment period, no payment will be made for the percentage increments not completed. Completion of the establishment period includes completion of all establishment period tasks (post planting care items).

Payment will be made under:

Item No.	Item	Pay Unit
4.17 AA	SHRUBS PLANTED, 15"-18" HIGH, ALL TYPES	EACH
4.17 AB	SHRUBS PLANTED, 30" TO 36" HIGH, ALL TYPES	EACH
4.17 AC	SHRUBS PLANTED, 18" TO 24" HIGH, ALL TYPES	EACH
4.17 ACA	SHRUBS PLANTED, 24" TO 30" HIGH, ALL TYPES	EACH
4.17 AD	SHRUBS PLANTED, 36" TO 48" HIGH, ALL TYPES	EACH
4.17 AE	SHRUBS PLANTED, 48" TO 60" HIGH, ALL TYPES	EACH
4.17 AF	SHRUBS PLANTED, 60" TO 72" HIGH, ALL TYPES	EACH
4.17 APS	PERENNIAL OR SHRUB PLANTED, 1 GALLON, ALL TYPES	EACH
4.17 C1G	GRASSES PLANTED, 1 GALLON, ALL TYPES	EACH
4.17 C1Q	GRASSES PLANTED, 1 QUART, ALL TYPES	EACH
4.17 CPL	PLUGS, GRASSES	EACH
4.17 D1G	SHRUBS PLANTED, DECIDUOUS. 1 GALLON. ALL TYPES	EACH
4.17 D3036	SHRUBS PLANTED, DECIDUOUS. 30" TO 36" HEIGHT, B&B. ALL TYPES	EACH
4.17 D34	SHRUBS PLANTED, DECIDUOUS, 3' TO 4' HEIGHT, B&B. ALL TYPES	EACH
4.17 D3G	SHRUBS PLANTED, DECIDUOUS.3 GALLON. ALL TYPES	EACH
4.17 D5G	SHRUBS PLANTED, DECIDUOUS. 5 GALLON. ALL TYPES	EACH
4.17 D78	SHRUBS PLANTED, DECIDUOUS. 7' TO 8' HEIGHT, B&B. ALL TYPES	EACH
4.17 EG3G	SHRUBS PLANTED, EVERGREEN. 3 GALLON. ALL TYPES.	EACH
4.17 EG5G	SHRUBS PLANTED, EVERGREEN. 5 GALLON. ALL TYPES.	EACH

4.17 FAT	FERN. ALL TYPES.	EACH
4.17 FB	FLOWERING BULB. PLANTED. ALL TYPES	EACH
4.17 MAS	SHRUBS PLANTED. ALL TYPES	EACH
4.17 OG10G	ORNAMENTAL GRASS PLANTED, 10 GALLON	EACH
4.17 OG1G	ORNAMENTAL GRASS PLANTED, 1 GALLON	EACH
4.17 OG1QT	ORNAMENTAL GRASS PLANTED, 1 QT	EACH
4.17 OG2G	ORNAMENTAL GRASS PLANTED, 2 GALLON	EACH
4.17 OG2QT	ORNAMENTAL GRASS PLANTED, 2 QT	EACH
4.17 OGG3G	ORNAMENTAL GRASS PLANTED, 3 GALLON	EACH
4.17 OG5G	ORNAMENTAL GRASS PLANTED, 5 GALLON	EACH
4.17 P1QT	PERENNIALS 1 QT	EACH
4.17 P2QT	PERENNIALS 2 QT	EACH
4.17 PB	GROUND COVER PLANTED. PERENNIAL BULBS. ALL TYPES	EACH
4.17 PG1G	PERENNIALS OR GROUNDCOVERS. PLANTED. 1 GALLON. ALL TYPES	EACH
4.17 PG2G	PERENNIALS OR GROUNDCOVERS. PLANTED. 2 GALLON. ALL TYPES	EACH
4.17 PG3G	PERENNIALS OR GROUNDCOVERS. PLANTED. 3 GALLON. ALL TYPES	EACH
4.17 PG5G	PERENNIALS OR GROUNDCOVERS. PLANTED. 5 GALLON. ALL TYPES	EACH
4.17 PG7G	PERENNIALS OR GROUNDCOVERS. PLANTED. 7 GALLON. ALL TYPES	EACH
4.17 *xxxxxx*	SHRUBS PLANTED, (*Size and type as specified in Bid Pages*)	EACH
4.17 *xxxxxx*	GROUNDCOVER PLANTED, (*Size and type as specified in Bid Pages*)	EACH
4.17 *xxxxxx*	PERENNIALS PLANTED, (*Size and type as specified in Bid Pages*)	EACH

Note: *xxxxxx* denotes serialized pay item.

SECTION 6.02 PA PNEUMATIC EXCAVATION AROUND TREES

6.02PA.1. INTENT.

This Section describes the excavation of trenches to be performed pneumatically around existing trees to remain.

6.02PA.2. DESCRIPTION.

The Contractor must perform pneumatic excavation work at locations where trees existing within the work area are required to remain. This work requires the Contractor to protect tree roots during excavation and implement, as needed, a temporary excavation support system. Work covered under this section must be performed at the locations indicated on the Contract Drawings, in accordance with the specification, and as directed by the Engineer, in consultation with and under the supervision of a Tree Consultant in accordance with Section 4.21 of the NYCDOT standard highway specifications.

6.02PA.3. SUBMITTALS.

Follow the procedures in the NYC Department of Transportation's Standard Highway Specifications, General Conditions, **Section 1.06.31**.

(A) Qualifications: Submit letter documenting prior experience of Contractor performing pneumatic excavation.

(B) Shop drawings: Where required, the Contractor must submit design shop drawings for any temporary excavation support system to be used during the pneumatic excavation work. The shop drawings must be prepared, signed, and sealed by a Professional Engineer currently licensed in the State of New York. The shop drawings must be submitted to the Engineer at least two (2) weeks before commencement of excavation. Excavation work may not commence until the shop drawings are approved by the Engineer.

6.02PA.4. QUALITY CONTROL

(A) OPERATOR QUALIFICATIONS: The Contractor or Subcontractor performing this excavation work must having at least one year of documented experience operating the pneumatic excavation tool in conjunction with related equipment as described herein.

(B) TREE CONSULTANT: Unless otherwise directed by the Engineer, all pneumatic excavation work must be performed under the direction of the Engineer, in consultation with the Tree Consultant (Item 4.21), also referred to as the Contractor's Certified Arborist.

(C) PRE-PNEUMATIC EXCAVATION MEETING: Prior to the start of such excavation, the Contractor and its approved Operator for pneumatic excavation must attend a meeting arranged by the Engineer, with the Tree Consultant (Item 4.21) and other parties as appropriate, to review the requirements of this item including the schedule of operations, the mandatory presence of the Tree Consultant, safety measures, reporting, etc. The Contractor is required to submit a schedule of his anticipated pneumatic excavations at this meeting.

6.02PA.5. MATERIALS

Materials must meet the following requirements, as modified by any supplemental landscape specifications or special notes included in the contract documents. Where indicated, reference must be to the latest revision/edition of Standard Specifications of the New York State Department of Transportation (NYSDOTSS):

(A) PNEUMATIC EXCAVATING TOOL. Excavation must be performed through the use of a pneumatic excavation tool with the following requirements:

(1) The high air velocity excavation tool must be specifically designed to fracture, pulverize, and displace porous and semi-porous soils without harming or causing damage to tree roots, existing subsurface utilities or other non-porous objects.

(2) The Contractor must submit catalog cuts from the manufacturer verifying that the Pneumatic excavation tool meets the following criteria:

Rated Operating Pressure: 6.2 – 7.0 bar

Air Stream Velocity at Cutting Head: 2,200 – 2,500 km/hr

Air Displacement: 4,000 – 5,000 L/min

(B) AIR COMPRESSOR. The air compressor may be either a portable or truck-mounted unit and must be adequately sized as required to power the pneumatic excavation tool in accordance with the manufacturer's recommendations for the pneumatic excavating tool.

(C) VACUUM TRUCK. A vacuum truck should be used to collect excavated spoil directly from the trench or pit.

(D) CONTAINMENT STRUCTURE. To prevent the spread of excavated soil onto adjacent roadways and areas beyond the designated work zone limits, the Contractor must provide a mobile structure or barrier to contain the material dislodged by the pneumatic excavation tool from the trench or pit. Timber or corrugated metal shields, tents supported on tubular frames or other structures as approved by the Engineer may be used.

(E) ROOT PROTECTION. The following are required for root protection:

Item	NYSDOTSS Articles
Quilted Covers	711-02
Burlap	711-06

6.02PA.6. METHODS.

The work must be performed where shown on the Contract Drawings and as directed by the Engineer.

(A) RESPONSIBILITIES OF THE CONTRACTOR: Prior to bidding, the Contractor must examine the site and available information, and formulate methods of construction that will not result in any damage to existing trees during excavation. In any event, the Contractor will be held liable for irreparable and/or irreversible damage to any trees harmed due to the Contractor's methods and must replace those trees as directed by the Department of Parks and Recreation, at no additional cost to the City.

(B) WORK SITE SAFETY: In addition to the Department of Design and Construction's Safety Requirements policy and responsibilities, the pneumatic excavation must be performed in accordance with the manufacturer's operating instructions. The Contractor must be responsible to provide adequate equipment and perform pneumatic excavation techniques properly to preclude movement of any air-borne soils onto adjacent roadways or other areas beyond the designated work zone limits. Failure to contain and/or collect the excavated soil will result in the immediate termination of pneumatic excavation until soil containment and/or collection procedures are determined adequate by the Engineer. The Contractor must keep the public at a safe distance from the work zone at all times by means approved by the Engineer.

(C) DUST CONTROL: The work area must be watered thoroughly at least twenty-four (24) hours in advance of, but no more than forty-eight (48) hours, prior to the start of any pneumatic excavation in order to reduce the incidence of airborne dust resulting from the pneumatic excavation operation.

(D) EXCAVATION – GENERAL: All excavation using the pneumatic excavation tool must be performed in accordance with the manufacturer's recommendations in order to remove soil without causing damage to the roots of trees, buried structures, and/or utilities either in or adjacent to the excavation. The Contractor must excavate within limits designated for pneumatic excavation shown on the Contract Drawings or as directed by the Engineer, in consultation with the Tree Consultant (Item 4.21), using the pneumatic excavating tool. When working near utilities, the Contractor must be responsible to locate underground facilities as required under 16 NYCRR Part 753 and **Section 1.06.28** of the NYC Department of Transportation's Standard Highway Specifications.

(E) EXCAVATION – TEMPORARY EXCAVATION SUPPORT SYSTEM: Approved sheeting and bracing must be used where necessary to support the sides of the excavation, in order to: prevent damage to subsurface structures and adjacent buildings; safeguard persons and property; minimize inconvenience to traffic and the public; protect the structure to be installed; support the adjacent tree(s); and, provide suitable and safe working conditions. Except as otherwise provided, deviations from the above will be permitted only where, in the judgment of the Engineer, such exception will not result in any of the hazards described above.

In cases where sheeting and bracing will not adequately protect adjacent structures from damage and settlement, the Contractor will be required to use such measures as are necessary to safely support and maintain adjacent and abutting property and structures, support the tree without causing damage to the tree, and to maintain the work safe to life, limb, and property.

All sheeting and bracing systems that the Contractor elects to use or that are ordered to use by the Engineer must comply with the requirements of **Section 40.05, "SHEETING AND BRACING**," of the NYCDEP, Standard Sewer and Water Main Specifications, and must receive the approvals stated therein.

Unless otherwise specified in the Contract Drawings or these Specifications or specifically permitted in writing by the Engineer, the Contractor must be required to withdraw and remove all sheeting and bracing simultaneously with the backfilling of the excavation.

(F) ROOT PROTECTION: The Contractor must place wet burlap or cotton mats upon both the fibrous and structural roots immediately after they have been exposed by the pneumatic excavating tool. The burlap or cotton covering may be removed to perform inspection or construction operations, but the Contractor must be required to keep the burlap or cotton towels wet and the roots moist until backfilling is complete.

The Engineer must be immediately informed of any damaged tree roots. No tree roots may be pruned except as specifically authorized by the Tree Consultant (Item 4.21). In case the concentration of roots obstructs the placement of utilities, footings or other structures, limited pruning may be necessary as directed by the Tree Consultant (Item 4.21). Tree roots in excess of one (1) inch in diameter, measured at the edge of the excavation, must be cut cleanly at the edge of excavation using a sharp cutting tool. All root pruning must be performed under the direction of the Tree Consultant (Item 4.21).

(G) TREE CONDITION REPORT: The Contractor must supply the Tree Consultant (Item 4.21) with information as needed for the Tree Consultant to prepare periodic reports to the Engineer summarizing the number, type and condition of trees adjacent to each area of pneumatic excavation. These reports must also indicate the duration of open excavation and identify any root damage and mitigation actions taken.

(H) BACKFILLING: Refer to Section 6.02 PB "Backfilling Around Trees", herein, for the requirements and procedures for backfilling excavated areas.

6.02PA.7. MEASUREMENT.

The quantity to be measured for payment hereunder must be the number of cubic yards of soil and fill material removed by pneumatic excavation, completed, as described herein and to the satisfaction of the Engineer. The volume to be obtained by vehicle measurement.

In determining the vehicle measurement, only water level loads that have been raked by the Contractor to a flat exposed surface will be accepted by the Engineer and no allowance will be made for any crown or peak of the load.

6.02PA.8. PRICE TO COVER.

The contract price bid for "PNEUMATIC EXCAVATION AROUND TREES" must be a unit price per cubic yard of material excavated as described herein, at the locations and to the limits indicated on the Contract Drawings or directed by the Engineer, in consultation with the Tree Consultant (Item 4.21). The unit price bid must include the cost of all labor, materials, plant, equipment, professional engineering design services, insurance, and all other work incidental thereto needed to perform the excavation work; all in accordance with the Contract Drawings, the specifications and the directions of the Engineer. Disposal of excess and unsuitable (excluding contaminated) materials must also be deemed included in the unit price bid for this Item 6.02 PA "PNEUMATIC EXCAVATION AROUND TREES."

No separate payment will be made for replacement trees required by NYCDPR that the Contractor must acquire and plant as a result of damage to trees caused by the Contractor's excavation methods.

Payment will be made under:

Item No.	Item	Pay Unit
6.02 PA	PNEUMATIC EXCAVATION AROUND TREES	C.Y.

SECTION 6.02 PB BACKFILLING AROUND TREES

6.02PB.1. INTENT.

This Section describes the materials and methods for backfilling pneumatically excavated areas around existing trees to remain.

6.02PB.2. DESCRIPTION.

The Contractor must be required to backfill pneumatically excavated areas around existing trees to remain. This work requires the Contractor to protect existing tree roots and minimize grade changes around trees. Work covered under this section must be performed at the locations indicated on the Contract Drawings, in accordance with the contract documents, and as directed by the Engineer, in consultation with and under the supervision of a Tree Consultant (Item 4.21). in accordance with Section 4.21 of the NYCDOT standard highway specifications.

6.02PB.3. SUBMITTALS.

All submittals must be as per the NYC Department of Transportation's Standard Highway Specifications, General Conditions, **Section 1.06.31**.

(A) Proposed Samples and Test Results: The Contractor must submit two (2) one pound (1 lb.) bags of compost to the Engineer, with the testing report attached, for approval prior to delivering material to the site.

(B) The Contractor, at the direction and discretion of the Engineer, must furnish a certified report of an approved analytical chemist showing the mechanical and chemical analysis of representative samples of the compost they propose to use. All samples are to be taken by the Contractor and delivered to the Laboratory. The price bid must include laboratory and inspection charges.

(C) No compost must be delivered to the site until the Engineer has approved the samples, but such approval shall not constitute final acceptance. The Engineer reserves the right to reject, on or after delivery, any material which does not, in the Engineer's opinion, meet these specifications. When compost is stored on the job, it must be done as directed by the Engineer.

(D) The Contractor must provide certification for the mycorrhizal fungi product.

6.02PB.4. QUALITY CONTROL

(A) TREE CONSULTANT: Unless otherwise directed by the Engineer, all backfilling must be performed under the direction of the Engineer, in consultation with the Tree Consultant (Item 4.21), also referred to as the Certified Arborist.

All work limits to be determined in the field by the Tree Consultant.

(D) PRE-BACKFIILLING MEETING: Prior to the start of backfilling, the Contractor and its approved Operator for backfilling must attend a meeting arranged by the Engineer, with the Tree Consultant (Item 4.21) and other parties as appropriate, to review the

required composition of backfill material, the necessity of maintaining the existing grade, the mandatory presence of the Tree Consultant, safety measures, etc.

No staging or storage of equipment or materials must occur within the tree protection zone of the project.

6.02PB.4. RESPONSIBILITIES OF THE CONTRACTOR.

Prior to bidding, the Contractor must examine the site and formulate methods and equipment that will not result in any damage to existing trees during backfilling operations. In any event, the Contractor will be held liable for irreparable and/or irreversible damage to any trees harmed due to the Contractor's methods and must replace those trees as directed by the Department of Parks and Recreation, at no additional cost to the City.

6.02PB.5. MATERIALS.

Backfill material must be composed of 5% compost, mycorrhizal funghi, and 95% excavated soil (from Item No. 6.02PA - Pneumatic Excavation Around Trees). Mix to be determined by volume, not weight. Materials must meet the following requirements, as modified by any supplemental landscape specifications or special notes included in the contract drawings. Materials must be thoroughly mixed before spreading, to the satisfaction of the Engineer.

(A) COMPOST. Compost must contain organic matter, or material of generally humus nature capable of sustaining the growth of vegetation, with no admixture of refuse or material toxic to plant growth. The Compost must be free of pathogens, stones, lumps, or similar objects larger than two inches in greatest diameter, as well as roots, brush and weeds.

Composts that have been derived from organic wastes such as food and agriculture residues, animal manures, composted leaves that meet the above requirements, and are approved by the New York State DEC, are acceptable compost sources. Compost must have an approximate N-P-K analysis of at least 1-1-0 as delivered, with a pH between 5.5 and 8.0 and a solids content of at least fifty percent (50%). Compost must have a minimum of twenty-five (25%) to a maximum of fifty percent (50%) organic material.

Compost must be furnished by the following manufacturers or approved equivalent:

- Long Island Compost, Islip, NY; or
- "Nature's Choice Compost" by Nature's Choice Corp., Union, NJ; or
- Agresoil compost by Agresource, Inc. Amesbury, MA; or an approved equivalent.
- Compost available from NYC Department of Sanitation may be acceptable for purposes of this specification. See www.nyc.gov/sanitation or www.nyccompost.org for pick-up sites.

Organic biosolids are not acceptable under this specification.

No compost shall be delivered in a frozen or muddy condition.

(B) MYCORRHIZAL FUNGHI INCOULANT. Fungi must be high quality mycorrhizal product from an approved source. Mycorrhizal fungi inoculants must be applied by means of a three ounce (3 oz.) premeasured dry formulation packet, such as Mycor Tree Saver Transplant®, as manufactured by Plant Health Care, Inc., Pittsburgh, PA;

Rhizanova Tree Transplant, as manufactured by Becker Underwood, Inc., Ames, IA; DIEHARD®, as manufactured by Horticultural Alliance and distributed through Atlantic Irrigation, White Plains, NY; or, an approved equivalent. Packets must contain, as a minimum: one thousand (1000) live spores of Vesicular-Arbuscular fungi, including: *Entrephosphora Columbiana, Glomus clarum, Glomus etunicatum,* and *Glomus sp.;* seventeen million five hundred thousand (17,500,000) live spores of Ectomycorrhizal fungi, including: *Pisolithus tinctorius;* biostimulants including *Yucca schidigera* extract; soluble sea kelp derived from *Ascophylum nodosum;* humic acids; and acrylamide copolymer gel as a water absorbent medium.

Mycorrhizal innoculant should be used for planting trees, woody shrubs, and woody groundcovers only; it not needed for herbaceous material. Mycorrhizal fungi inoculants must be added to the top six (6) to eight (8") inches of backfill soil in each planting pit and thoroughly mixed to distribute the inoculants. The opened packets must be given to the Engineer at the end of the day. Mycorrhizal inoculants is a dated material and must be used before it expires.

The material must be applied according to the following chart:

Size of rootball	Ounces per tree
20"	6
30"	9
36"	12
42"	12

(C) EXCAVATED SOIL. Excavated soil should be stored on site in a mobile structure or protected by barriers and tents.

If recapture of excavated soil is less than 95% for the backfill of excavated volumes, the difference must be made up with additional topsoil. Topsoil must conform to Clay Loam constituent per Section 4.15 UPM. If recapture of excavated soil is more than 95% for the backfill of excavated volume, the excess soil must be removed from the site or reused as directed by the Engineer.

6.02PB.6. BACKFILL PROCEDURES.

(A) WORK SITE SAFETY: The Contractor must be responsible to provide adequate equipment and perform backfilling operations properly to preclude movement of any air-borne soils onto adjacent roadways or other areas beyond the designated work zone limits. Failure to contain and/or collect the soil will result in the immediate termination of backfilling operations until soil containment and/or collection procedures are determined adequate by the Engineer. The Contractor must keep the public at a safe distance from the work zone at all times by means approved by the Engineer.

(B) DUST CONTROL: The work area must be watered thoroughly at least twenty-four (24) hours in advance of, but no more than forty-eight (48) hours, prior to the start of any backfilling in order to reduce the incidence of airborne dust.

(C) BACKFILLING – GENERAL: The Contractor must backfill within limits designated shown on the Contract Plans or as directed by the Engineer, in consultation with and under direct supervision of the Tree Consultant (Item 4.21).

No backfill material must be handled when, in the opinion of the Tree Consultant, is too wet. Place and spread approved backfill in dry weather on dry unfrozen grade. Ensure that all lumps are broken up and surface is smooth.

(D) ROOT PROTECTION: Roots should be protected by wet burlap or cotton mats upon exposure from excavation. The burlap or cotton covering may be removed to perform inspection or construction operations, but the Contractor must be required to keep the burlap or cotton towels wet and the roots moist until backfilling is complete.

The Engineer must be immediately informed of any damaged tree roots. No tree roots may be pruned except as specifically authorized by the Tree Consultant (Item 4.21). In case the concentration of roots obstructs the placement of utilities, footings or other structures, limited pruning may be necessary as directed by the Tree Consultant (Item 4.21). Tree roots in excess of one (1) inch in diameter, measured at the edge of the excavation, must be cut cleanly at the edge of excavation using a sharp cutting tool. All root pruning must be performed under the direction of the Tree Consultant (Item 4.21).

(E) TREE CONDITION REPORT: The Contractor must supply the Tree Consultant (Item 4.21) with information as needed to prepare periodic reports to the Engineer summarizing the number, type, and condition of trees impacted by backfilling operation. These reports must also indicate the duration of open excavation and identify any root damage and mitigation actions taken.

6.02PB.7. MEASUREMENT.

The quantity to be measured for payment hereunder must be the number of cubic yards of soil and fill material added by backfilling, completed, as described herein and to the satisfaction of the Engineer. The volume to be obtained by vehicle measurement.

In determining the vehicle measurement, only water level loads that have been raked by the Contractor to a flat exposed surface will be accepted by the Engineer and no allowance will be made for any crown or peak of the load.

6.02PB.8. PRICE TO COVER.

The contract price for "BACKFILLING AROUND TREES" shall be the unit price bid per cubic yard of material added as described herein, at the locations and to the limits indicated on the Contract Drawings or directed by the Engineer, in consultation with the Tree Consultant (Item 4.21). The unit price bid must include the cost of all labor, materials, equipment, professional engineering design services, insurance, and all other work incidental thereto needed to perform the backfilling work; all in accordance with the Contract Drawings, the specifications and the directions of the Engineer. Disposal of excess and unsuitable (excluding contaminated) materials must also be deemed included in the unit price bid for Item 6.02 PB "BACKFILLING AROUND TREES."

No separate payment will be made for replacement trees required by NYCDPR that the Contractor must acquire and plant as a result of damage to trees caused by the Contractor's excavation methods.

Payment will be made under:

Item No.	Item	Pay Unit
6.02 PB	BACKFILLING AROUND TREES	C.Y.

SECTION 6.29 – TUBULAR MARKERS

6.29.1. INTENT. This section describes the work of furnishing, installing, maintaining, and removing tubular markers.

6.29.2. DESCRIPTION.

(A) PERMANENT TUBULAR MARKERS.

Under this section, the Contractor must furnish and install permanent tubular markers as indicated on the contract drawings and as directed by the Engineer.

(B) TEMPORARY TUBULAR MARKERS.

Under this section, the Contractor must furnish, install, maintain, relocate, and remove, when directed, temporary tubular markers as indicated on the contract drawings and as directed by the Engineer.

6.29.3. MATERIALS. Tubular markers must conform to the specifications set forth in the National Manual on Uniform Traffic Control Devices for Streets and Highways (National MUTCD) plus the New York State Supplemental (NYS Supplement) and shall be NCHRP 350 approved as a Category 1 device. Tubular markers must have a minimum height of 36" (900-mm) and a minimum outside diameter of 2" (50-mm). Tubular Markers must be circular or elliptical in cross section and must have a maximum weight of 13-lb (6-kg), not including a mounting base.

Tubular marker colors must be as follows:

- Temporary tubular markers, tubular markers at bollards, and all other tubular markers: Orange
- Tubular markers at Green Infrastructure practices: Black
- Or as directed by the Engineer

Tubular markers must have two horizontal circumferential stripes of white reflective sheeting a minimum of 3" (75-mm) wide. The top edge of the upper band shall be a maximum of 2" (50-mm) from the top of the marker. The space stripes between shall not exceed 6" (150-mm).

Reflective sheeting must conform to NYSDOT Standard Highway Specification Section 730-05 Reflective Sheeting ASTM D4956 Type I or Type III. The sheeting must be bonded to the post with a precoated, pressure-sensitive adhesive or a tack-free, heat activated adhesive. Mechanical fasteners to bond reflective sheeting to the post will not be allowed.

For free-standing temporary tubular markers, the base and/or any nonflexible portion of the marker shall not be more than 2" (50-mm) in height.

For tubular markers fastened to pavement, the bonding system used must be a fast-setting chemical compound, mastic-type material, or mechanical fastener capable of fixing the tubular marker to either concrete or asphalt pavement. The bonding system must not present a hazard to traffic if the tubular marker or base unit becomes unfixed from the pavement.

Acceptance of materials will be based on the manufacturer's name and type of tubular marker appearing on the most current New York State Department of Transportation's Approved List titled "Tubular Markers."

6.29.4. METHODS. The Contractor must install tubular markers in accordance with the contract documents or as directed by the Engineer. The Contractor must attach the tubular markers to the pavement in a manner that prevents them from being moved or dislodged by traffic. Tubular markers must be installed on pavement that has been cleaned to remove pavement markings, oil, dirt, or other debris or substances that may interfere with a proper bond. Attachment to the pavement must be by mechanical fastener or by adhesive, in accordance with the manufacturer's recommendations. Bonding agents must be of sufficient amount or size to ensure proper bonding of the base to the pavement.

All temporary tubular markers must be maintained upright, at proper spacing, in proper alignment and orientation, kept clean, and replaced as required during the various stages of construction.

Temporary tubular markers removed or damaged by the Contractor's operations or by traffic must be replaced immediately, so that positive separation is maintained between opposing lanes of traffic at all times. Damaged reflective sheeting on interim tubular markers must be replaced before nightfall as necessary to maintain adequate visibility of the markers. In cases where only isolated individual markers are lost or damaged, and adequate visibility is maintained by the remaining markers, replacement will not be required until more than one (1) consecutive markers have been damaged or lost.

At the completion of the work or when directed by the Engineer, the temporary tubular markers must be removed and disposed of away from the work site.

6.29.5. MEASUREMENT.

(A) PERMANENT TUBULAR MARKERS.

The quantity to be measured for payment will be the actual number of Permanent Tubular Markers placed in the work, to the satisfaction of the Engineer.

(B) TEMPORARY TUBULAR MARKERS.

The quantity to be measured for payment will be the actual number of Temporary Tubular Markers placed in the work, to the satisfaction of the Engineer.

Payment will be made only for the initial installation of temporary tubular markers at any location. Whenever temporary tubular markers are moved to a new location, as required by the contract drawings or directed by the Engineer, payment will be made in the same manner as if it were an initial installation. However, only tubular markers that are in satisfactory conditions may be relocated to a new location. Minor movement of the temporary tubular markers from one side of the roadway to the other side, or rearrangement within a work area will not be considered as a movement to a new location and will not entitle the Contractor to additional payment.

No payment will be made for movements of Temporary Tubular Markers made for the Contractor's convenience; for movement of Temporary Tubular Markers at a given location at the end of a work period and subsequent replacement at the same location at the beginning of the next work period; for movement of Temporary Tubular Markers at a given location during a work period and subsequent replacement at the same location during the same work period; or for the interchanging of Temporary Tubular Markers between initial installations.

6.29.6. PRICE TO COVER.

(A) PERMANENT TUBULAR MARKERS.

The contract price bid per each for Item No. 6.29 PTM – PERMANENT TUBULAR MARKERS, will cover the cost of furnishing all labor, materials, equipment, insurance, and necessary incidentals required to complete the work of furnishing and installing permanent tubular markers, all in accordance with the contract drawings, the specifications and the directions of the Engineer. No additional payment will be made for replacing damaged markers.

(B) TEMPORARY TUBULAR MARKERS.

The contract price bid per each for Item No. 6.29 TTM - TEMPORARY TUBULAR MARKERS, will cover the cost of furnishing all labor, materials, equipment, insurance, and necessary incidentals required to complete the work of furnishing, installing, maintaining, relocating, and removing temporary tubular markers, all in accordance with the contract drawings, the specifications and the directions of the Engineer. No additional payment will be made for replacing damaged markers.

Payment will be made under:

Item No.	Item Description	Pay Unit
6.29 PTM	PERMANENT TUBULAR MARKERS	EACH
6.29 TTM	TEMPORARY TUBULAR MARKERS	EACH

S - PAGES

SPECIAL PROVISIONS

NOTICE

THE PAGES CONTAINED HEREIN (S-PAGES) ARE SPECIAL PROVISIONS THAT SHALL APPLY TO AND BECOME A PART OF THE CONTRACT.

(NO TEXT ON THIS PAGE)

TABLE OF CONTENTS

ARTICLE	DESCRIPTION	PAGE NO.
A.	CONTRACT DRAWINGS	S-1
B.	DEFINITION	S-1
C.	MINIMUM QUALIFICATIONS OF CONTRACTOR/ SUBCONTRACTOR	S-1
D.	START OF CONTRACT WORK	S-2
E.	WORK TO PROCEED WITH DILIGENCE AND DISPATCH	S-2
F.	WORK FORCE	S-2
G.	LINES AND GRADES	S-2
H.	SPECIFIC TRAFFIC STIPULATIONS	S-3
I.	HOLIDAY CONSTRUCTION EMBARGO	S-4
J.	CURB WORK	S-5
K.	NEW CURB AND SIDEWALK AT EXISTING TREES	S-5
L.	EXISTING OBSTRUCTIONS	S-5
M.	CITY-OWNED STREET HARDWARE ADJUSTMENTS IN ROADWAY AREAS	S-5
N.	CITY-OWNED STREET HARDWARE ADJUSTMENTS IN SIDEWALK AREAS	S-5
O.	PRIVATE UTILITY HARDWARE ADJUSTMENTS	S-6
P.	DISPOSAL OF EXCESS EXCAVATED MATERIAL BY THE CONTRACTOR AT A SITE DESIGNATED BY THE CONTRACTOR	S-6
Q.	SURVEY MONUMENTS	S-6
R.	CORRECTIVE MILLING	S-6
S.	RESTORATION OF ADJACENT AREAS	S-6
T.	CLEANING OF DRAINAGE STRUCTURES	S-6
U.	FUEL COST	S-7
V.	USE OF CITY WATER	S-7
W.	ITEM NO. "6.52" AND WORDS "FLAGGER", "FLAGGERS" AND "FLAGPERSON"	S-7
X.	DPR CONSTRUCTION PERMIT	S-7
Y.	TIMES IS OF THE ESSENCE	S-7

Z.	LOCATIONS OF WORK	S-7
AA.	COMPACTION TESTING OF SIDEWALK FOUNDATION MATERIAL	S-8
AB.	BENEFICIAL OCCUPANCY	S-8
AC.	PRICES TO INCLUDE	S-8
	MAINTENANCE AND PROTECTION OF TRAFFIC	S-9
	OCMC TRAFFIC STIPULATIONS	S-15
	OCMC TRAFFIC STIPULATIONS – AMENDMENT #1	S-18
	CITYWIDE SITING CRITERIA FOR GREEN INFRASTRUCTURE – REQUIRED CLEARANCE TO STREET FEATURES	S-23
	DOT SITING CRITERIA FOR CITYWIDE DEP GREEN INFRASTRUCTURE PROGRAM - SIZE LIMITATIONS	S-27
	NYCDOT GREEN INFRASTRUCTURE DESIGN GUIDELINES	S-45
	INTERPRETIVE MEMORANDUM # 2	S-46
	SKETCH FOR PAVEMENT KEY INSTALLATION	S-49

SPECIAL PROVISIONS

A. CONTRACT DRAWINGS. In addition to the details shown on the Contract Drawings the Contractors attention shall include, but are not limited to, the following:

NEW YORK CITY DEPARTMENT OF ENVIRONMENTAL PROTECTION BUREAU OF ENGINEERING DESIGN AND CONSTRUCTION - GREEN INFRASTRUCTURE STANDARD DESIGNS AND GUIDELINES FOR GREEN INFRASTRUCTURE PRACTICES

Available on-line at:

http://www.nyc.gov/html/dep/pdf/green_infrastructure/bioswales-standard-designs.pdf

B. DEFINITION. The Right-of-Way (R.O.W) Green Infrastructure practices as defined for this contract shall consist of: R.O.W. Bioswales (ROWB) , R.O.W. Rain Gardens (ROWRG), R.O.W. Greenstrips (ROWGS), R.O.W. Infiltration Basins (ROWIB) and R.O.W. Stormwater Greenstreets (ROWSGS), each of which shall be installed where and when directed.

Green Infrastructure practices are rainwater management systems installed in the existing right of way to capture and manage stormwater via a curb inlet that allows stormwater to flow in and a curb outlet to allow excess stormwater to flow back out along the gutter. The R.O.W. Green Infrastructure practices are situated within the sidewalk and have variable lengths parallel to the curb line and variable widths perpendicular to the curb line. The Contractor is referred to NYC Department of Environmental Protection Bureau of Engineering Design and Construction - Green Infrastructure's latest *Standard Designs and Guidelines for Green Infrastructure Practices* , the specifications and contract drawings for more detail.

A Stormwater Greenstreet (SGS) is a rainwater management system installed in the existing right of way to capture and manage stormwater via curb inlet(s) that allow stormwater to flow in and a curb outlet to allow excess stormwater to flow back out along the gutter. SGSs have variable lengths parallel to the curb line and variable widths perpendicular to the curb line. They are situated within the roadway adjacent to the curb and in the sidewalk. The Contractor is referred to NYC Department of Environmental Protection Bureau of Engineering Design and Construction - Green Infrastructure's latest *Standard Designs and Guidelines for Green Infrastructure Practices*, the specifications and contract drawings for more detail.

C. MINIMUM QUALIFICATIONS OF CONTRACTOR/SUBCONTRACTOR. The Contractor and/or its proposed subcontractor shall have performed at least one (1) contract in seven (7) years that involved the construction of Green Infrastructure practices such as bioswales, greenstrips, infiltration basins, greenstreets, and rain gardens.

To support the Contractor's contention that it, or its proposed subcontractor are qualified to perform the work involving the installation of Green Infrastructure practices, the Contractor must provide the following information in a Statement of Qualifications with their bid:

Provide specific details on projects (i.e. location, size, cost, client, etc.). Provide client contact person's name and telephone number. Describe any problems encountered during construction and corrective action taken to remedy the problem. Describe any violations issued by NYSDEC or any other regulatory agency. How were the violations resolved? Provide chronological photos recording the progress from preconstruction through completion. Include any required sign-offs from client.

D. START OF CONTRACT WORK. The Contractor is notified that a Notice To Proceed (NTP) date will be issued for work to commence within 21 to 30 Days of Contract Registration. The Contractor must complete the work in the contract duration as set forth in Schedule A. To minimize neighborhood impact and maintain safety, the contractor shall immediately backfill all sites after excavation and secure filled but not planted sites with adequate pedestrian safety protection. In the event the Contractor fails to complete all required services set forth within the specified time frame, liquidated damages shall be assessed daily in the amount specified in Schedule A on Page SA-1.

E. WORK TO PROCEED WITH DILIGENCE AND DISPATCH. Timely completion of the Work of this Contract is critical to the completion of the milestone established in the Schedule A. Therefore, it is agreed that all Work hereunder shall be executed at such time(s) and in or on such parts of the Contract and with sufficient work force(s), materials, and equipment, so as to assure timely Substantial completion of the work as well as the swift completion of all Work hereunder.

The Contractor is required to prepare a Progress Schedule in accordance with Article 9 of the Standard Construction Contract and the Substantial Completion date will be determined in accordance with Article 14 of the Standard Construction Contract. The Date of Final Acceptance will be determined when all work is final and complete in accordance with Article 14 of the Standard Construction Contract.

F. WORK FORCE. The contractor must provide a minimum of three work crews that are ready to mobilize for the duration of the contract. The Engineer shall periodically assess the rate of progress and may order the Contractor to mobilize additional work crews to complete the work on time. If the Contractor fails to comply with such orders within seven (7) calendar days after the written notice from the Engineer, the Contractor may, under Article 48 of the Standard Construction Contract, be declared in default of this contract.

G. LINES AND GRADES. The Contractor shall furnish lines and grades in accordance with Section 1.06.27 of the Standard Highway Specifications. The Contractor shall check with the Topographic Section of the Borough President's Office as to the reliability and accuracy of the data to be used for lines and grades.

Where new curbs and sidewalks are designated to be constructed in locations where they do not currently exist, the Contractor shall be required to establish lines and grades and stake out and

layout the work for installing the new sidewalks and malls, as per Section 6.41 of the Standard Highway Specifications.

In addition, at the completion of the work the Contractor shall survey the entire area of new construction, including the adjoining side streets, to provide the Engineer with as-built locations and elevations at the top and bottom of the curbs, at the end of construction, at all street hardware, and breaks in grades.

Unless indicated otherwise, elevations indicated or specified refer to the North America Vertical Datum of 1988 (NAVD 88) for vertical data.

Unless indicated otherwise, coordinates indicated or specified refer to the North American Datum (NAD 83) StatePlane New York, Long Island FIPS 3104 Feet for horizontal data.

In addition, the Contactor shall be required to do the following:

a) The Contractor shall retain the services of a New York State Licensed Land Surveyor for the purposes of establishing the location of R.O.W. Bioswales, R.O.W. Rain Gardens, R.O.W. Greenstrips, R.O.W. Infiltration Basins and R.O.W. Stormwater Greenstreets before construction and establishing the final constructed location (As-Built) coordinates as referenced in Section 1.19.

b) Lines and grades. All work shall be constructed according to the lines and grades shown on the Contract Drawings and as approved by the Engineer.

c) The Engineer will establish a base line and bench mark.

d) The Contractor shall establish all other lines, elevations and grades required for the work and be solely responsible for the accuracy thereof.

e) The Contractor shall install a Survey Nail at the upstream corner of every Green Infrastructure Practice constructed. The Survey Nail shall be placed in the center of the curb, lined up with the edge of the header. The Survey Nail shall be used to establish the final coordinates of the Green Infrastructure Practice (Northing and Easting).

f) The Engineer shall be notified prior to the establishment of any line, elevation or grade.

g) Safeguarding marks. The Contractor shall safeguard all points, stakes, grade marks, monuments, and bench marks made or established on the work, re-establish same if disturbed and bear the entire expense of rectifying work improperly installed due to not maintaining, not protecting or removing without authorization such established points, stakes, marks, and monuments.

H. SPECIFIC TRAFFIC STIPULATIONS. The Contractor shall perform the work in strict accordance with the requirements of Section GI-6.70 of the contract specifications, the Maintenance and Protection of Traffic contract drawings, the Office of Construction Management

Coordination (OCMC) traffic stipulations attached to the end of these Special Provisions, and the directions of the Engineer. In case of a conflict, the Engineer's directions shall govern.

Any maintenance and protection of traffic devices (e.g. planking with hand rails, metal ramps, wooden steps, roadway plates, traffic cones, temporary pavement markings, flags, etc.) not provided in the bid schedule but deemed necessary to comply with the requirements of Section GI-6.70 of the contract specifications, shall be deemed to be included in the unit prices bid for all of the scheduled contract items.

I. HOLIDAY CONSTRUCTION EMBARGO. A special Holiday Construction Embargo shall be in effect on the Friday of the week preceding Thanksgiving Day week from 6:00 AM to 11:59 PM and again from the Monday of Thanksgiving Day week from 6:00 AM through January 2, at 11:59 PM. Roadway and sidewalk construction activities will be restricted during the embargo period on the streets listed below[1].

Any permits issued prior to the date of this notice, for work during this embargo period on the streets listed below which do not already have the permit stipulation "410" are hereby suspended for the period noted above. All permittees must comply with this embargo unless a special waiver is granted by OCMC. Waiver requests must be filed at least thirteen days before Thanksgiving Day, in the Permit Office by filing a "Request for Roadway/Sidewalk Permits During Embargo Periods" and submitting supporting documentation. Waiver requests should only be submitted for critical reasons for a specific project. If a waiver is granted, the applicant will be notified so they can apply for the approved permits. Waivers **are not** required for ongoing Building Construction Activity Permits which already include the "410" permit stipulation. Waiver request forms may be obtained at any Permit Office or on the Department of Transportation's website at: http://www.nyc.gov/html/dot/downloads/pdf/holidayembapp.pdf

Prior to this embargo period all necessary measures must be taken so that all roadways and sidewalks are in proper condition to allow for the expeditious and safe movement of vehicular, bicycle and pedestrian traffic. Tool carts, cable reels, containers, and material stored on roadways must be removed during the embargo period.

The opening of utility access covers is prohibited on any of the streets noted below between the hours of 6:00 AM and midnight unless the utility or Contractor files for an Emergency Authorization Number as required by section 2-07 of the Department of Transportation's Highway Rules. The planned opening of utility access covers may occur during the hours of 12:01 AM and 5:59 AM where no authorization number is required.

Temporary restoration of the streets and sidewalks and removal thereof, if required for the Holiday Embargo period, will be paid for under the appropriate scheduled items.

---

1 **Please note that this embargo only applies to NYCDOT construction permits.** List of street and maps of the affected locations are available by borough on the Department of Transportation's website at: http://www.nyc.gov/html/dot/html/motorist/trafalrt.shtml

No extension of time due to the shutdown period will be granted to the Contractor for completion of the work.

J. CURB WORK. Where steel faced concrete curb is required to be installed, the curb adjacent to the concrete aprons shall be depressed and transitional as required and shall be paid for under Item 4.09 BD, Depressed Steel Faced Concrete Curb.

K. NEW CURB AND SIDEWALK AT EXISTING TREES. At locations where the Contractor is working adjacent to existing trees designated to remain where the tree roots may interfere with standard installation of curb or sidewalk, the Contractor shall utilize Items 6.02 PA and 6.02 PB, as advised by the NYCDPR approved Tree Consultant and as directed by the Engineer, in order to mitigate construction trauma to trees. Existing tree pit size may be enlarged, where and as ordered by the Engineer, in order not to damage tree roots.

L. EXISTING OBSTRUCTIONS. The Contractor shall excavate existing abandoned lamppost base, traffic post base etc., down to the bottom of the Green Infrastructure practice within the work area. Payment for this work will be made under Item 4.11 AS of Standard Highway Specifications. The Contractor shall coordinate and obtain the required permits from the owning agency.

The Contractor shall relocate existing drive-rail posts and the attached signs, such as street name signs, traffic signs, etc., where indicated or directed, to a nearby area just beyond the limits of the Green Infrastructure practice as directed by the Engineer. Payment for this work will be made under the appropriately scheduled contract items. The Engineer will notify the responsible City Agency or private entity having jurisdiction over these signs.

M. CITY-OWNED STREET HARDWARE ADJUSTMENTS IN ROADWAY AREAS. Where adjustment of street hardware, such as catch basin gratings, manholes, and valve boxes, is required in the roadway to facilitate Green Infrastructure practice work as shown on the Contract Drawings, the adjustment will be paid for under Item 6.36 DR.

N. CITY-OWNED STREET HARDWARE ADJUSTMENTS IN SIDEWALK AREAS. Where adjustment of street hardware, such as manholes, valve boxes, box covers, monuments, etc., is required in the sidewalk to facilitate Green Infrastructure practice work, payment is deemed included in the prices bid for all scheduled contract items where the vertical movement is less than or equal to 6" down, or where the vertical movement is less than or equal to 12" upward. However, where the vertical movement of street hardware is more than 6" downward or more than 12" upward, then the adjustment work will be paid for under Item 6.36 DR.

Vertical adjustment of each installation and resetting the castings shall consist of: removing the existing frame and cover, and granite slab where applicable; modifying the existing installation as required; replacing the frame and/or cover if damaged, as determined by the Engineer, with a new frame and/or cover furnished under Item 6.22 F; resetting granite slab where applicable; and, setting the frame and cover to the new sidewalk elevation and slope.

Materials used shall comply with the Department's Sewer Standards for drainage installations, and the appropriate Department having jurisdiction over other installations.

Resetting castings shall be done with brick and mortar according to the standards of the Department of Environmental Protection or the appropriate Department having jurisdiction over the installation. Work shall be done in a workmanlike manner, and any damage resulting from the Contractor's operations, to the existing installation which is to remain, shall be satisfactorily corrected, as directed by the Engineer, at the Contractor's own expense and at no additional cost to the City. Removed and damaged sidewalk shall be replaced in kind.

O. PRIVATE UTILITY HARDWARE ADJUSTMENTS will be performed by the owning utility company or its agent, at its expense. The Contractor shall notify the utility company at least seventy-two (72) hours prior to start of work at each location where its hardware requires adjustment.

P. DISPOSAL OF EXCESS EXCAVATED MATERIAL BY THE CONTRACTOR AT A SITE DESIGNATED BY THE CONTRACTOR. Excess material excavated by the Contractor becomes the Contractor's property and is to be properly disposed of at the Contractor's expense.

Q. SURVEY MONUMENTS. When working in the vicinity of survey monument the Contractor shall hand excavate under Item 8.02 AB-S at City Survey Monuments, for a distance of five (5) feet around each monument, as directed by the Engineer.

R. CORRECTIVE MILLING. Where directed by the Engineer and prior to construction of sidewalks, the Contractor shall install a pavement key, under Item GI-6.51, at Green Infrastructure practice locations and other locations as directed. Unless otherwise directed, the milling area shall generally be 3' to 6' wide adjacent to the new curb and 2"± deep. The purpose of milling is to remove uneven wearing course, facilitate surface storm water run-off, and prepare for resurfacing after completion of the concrete work.

Resurfacing, under Item 4.02 AF-R, over the milled area shall be approximately 2"± deep. Where ponding remains after resurfacing, no payment will be made for any work at that location unless the ponding condition is corrected in a manner satisfactory to the Engineer.

S. RESTORATION OF ADJACENT AREAS. The Contractor shall be required to remove all form work. In planting strip areas, the Contractor shall be required to restore areas damaged as a result of its operations, to the satisfaction of the Engineer, with sod. The Contractor shall also, as directed by the Engineer, make safe adjacent areas to his work, such as: restoring missing or damaged pavement markings that were removed or damaged as a result of the Contractor's operations (as per requirements of Section 6.44 in the Standard Highway Specifications); resetting granite blocks in tree pits; and, applying asphaltic concrete mixture (under Item 4.02 CB) where badly broken sidewalk or curb may create a dangerous condition just outside the area of operation, where and when directed by the Engineer.

All restoration work shall be done to the satisfaction of the Engineer.

T. CLEANING OF DRAINAGE STRUCTURES. The Contractor shall be required to keep all existing drainage structures within the work area clean and operable at all times. Should the Contractor let debris enter any drainage structure as a result of its operations, it shall be required

to immediately clean that drainage structure at its own expense. All other drainage structures requiring cleaning shall be referred to the Department of Environmental Protection.

U. FUEL COST. The Contractor is notified that fuel cost per gallon used in the formula under Sub-Article 26.2.8 of the Standard Construction Contract for Extra Work will be derived from the fuel price index for the United States East Coast published weekly by the United States Energy Information Administration ("USEIA"), and available on its website at http://www.eia.gov/petroleum/gasdiesel/. The USEIA-published cost per gallon for the applicable fuel on the East Coast for the week in which the first day of each calendar quarter during the contract term occurs (i.e., January 1st, April 1st, July 1st and September 1st) will be used in the reimbursement formula for all Extra Work invoiced that was performed during that calendar quarter. Should the USEIA stop publishing this fuel price index, the fuel cost per gallon will be determined by reference to a substitute index to be agreed upon by the Contractor and the City.

V. USE OF CITY WATER. The Contractor is notified that use of city water under this project the Contractor shall be required to obtain all necessary permits from the Department of Environmental Protection, at no cost to the Contractor in accordance with the NYC Department of Environmental Protection, Standard Sewer and Water Main Specifications, dated July 1, 2014, Section 12.04 "TEMPORARY USE OF CITY WATER ON CONSTRUCTION PROJECTS".

W. ITEM NO. "6.52" AND THE WORD "FLAGPERSON". The Contractor is notified that in the Contract Drawings, Sketches, the OCMC Traffic Stipulations, and Section GI-6.70 of the I-Pages (Book 3 of 3) the term flagperson shall mean Item No. "6.52 CG" and the words "Crossing Guard", respectively.

X. DPR CONSTRUCTION PERMITS are required for all work on parkland or on sidewalks adjacent to parks or other areas maintained by DPR. Work shall not commence without obtaining the necessary permit.

Y. TIME IS OF THE ESSENCE. This contract is critical to meeting the required percentage of impervious surface managed milestone for 2020, which is the subject of a State consent decree to which both the New York City Department of Environmental Protection and the New York State Department of Environmental Conservation are parties. It is understood and specifically agreed by the Contractor, that time is of the essence in the performance of the Work under this Contract. The Contractor expressly agrees that they shall commence, proceed with, and finish construction under this Contract so that Substantial Completion is achieved in all respects within the specified time for completion and any and all remaining Work hereunder is completed promptly thereafter. The Contractor's attention is directed particularly to Schedule A and to the Detailed Specifications.

Z. LOCATIONS OF WORK. Work under this contract shall be performed at various locations in the right-of-way within the Borough generally a neighborhood or multiple neighborhoods.

The Contractor is advised that no minimum quantity of Green Infrastructure practices or other items under this contract are guaranteed.

The Contractor is hereby notified that the locations selected for this contract may be along heavily traveled pedestrian routes.

NOTE: THE DEPARTMENT OF DESIGN AND CONSTRUCTION RESERVES THE RIGHT TO EITHER:

a) Delete any locations if funding is insufficient to complete all this work.

b) Delete any location where any one of the following are required: relocation of lamppost, traffic signals, hydrant, or catch basin; a vault structure interferes with construction of ramp; Transit Authority structure interferes with construction; or, a distinctive sidewalk has to be installed.

c) Delete any item of work where directed by the Engineer.

The Contractor's attention is called to the fact that the Engineer's Estimate is approximate only and no claim shall be made against the City for loss of anticipated profits for items of work not performed or locations deleted from the contract.

Guaranteed Minimum: In the event the Contractor is not directed to perform any services hereunder, the City agrees to pay, and the Contractor agrees to accept, a minimum fee of $2,000. The Contractor further agrees that under such circumstances, it has no action for damages or for loss of profits against the City. In addition, if no services are ordered, the City agrees to reimburse the Contractor the actual and reasonable cost of required performance and payment bonds, with no mark up for overhead and profit. In its request for reimbursement, the Contractor shall provide a copy of the cancelled check for the required bonds, as well as any other documentation required by the Commissioner.

AA. COMPACTION TESTING OF SIDEWALK FOUNDATION MATERIAL. The Contractor is required to spot test to verify that their method of compacting the sidewalk foundation material, achieves the required density.

The test shall be conducted by a properly calibrated Nuclear testing device. The operator shall be a technician certified in its operation, as approved by the Engineer. Three spot tests will be required at each Green Infrastructure practice, unless a test result indicates that the minimum compaction was not achieved, in which case additional testing may be required by the Engineer.

A copy of all nuclear density monitoring results including date, time, location by distance and offset, from building line or curb line, and the theoretical maximum density reading and any pertinent remarks is to be delivered to the Engineer the same day.

AB. BENEFICIAL OCCUPANCY. The Contractor is to take notice that the City intends to use Article 16 as work on the construction of the various GI practices is completed to the satisfaction of both the Engineer and DEP.

AC. PRICES TO INCLUDE. No direct payment will be made for costs incurred in complying with the foregoing Special Provisions, unless otherwise provided. Said costs will be deemed to have been included in the prices bid for all the scheduled contract items.

MPT-GI.1

CITY OF NEW YORK
DEPARTMENT OF DESIGN AND CONSTRUCTION

MPT-GI.1

MAINTENANCE AND PROTECTION OF TRAFFIC

FOR CONSTRUCTION OF GREEN INFRASTRUCTURE IN THE R.O.W.

MPT NOTES - APPLICABLE TO ALL STAGES

GENERAL NOTES

9. THE WORK AREA IS NOT LIMITED TO ONE LOCATION. THE CONTRACTOR IS EXPECTED TO WORK AT MULTIPLE LOCATIONS USING MULTIPLE CREWS, AT ANY TIME, AS APPROVED BY THE ENGINEER.

1. THE CONTRACTOR SHALL NOTIFY THE DEPARTMENT OF TRANSPORTATION'S OFFICE OF CONSTRUCTION MITIGATION AND CONTROL (TELEPHONE NO. 1-212-839-6921) AND THE DIVISION OF TRAFFIC & PLANNING (TELEPHONE NO. 1-718-433-3310) AT LEAST 20 DAYS BEFORE THE START OF CONSTRUCTION TO SCHEDULE A PRE-CONSTRUCTION MEETING.

2. PRIOR TO ANY WORK PERMITS BEING ISSUED, A PRE-CONSTRUCTION MEETING WILL BE HELD TWENTY (20) DAYS IN ADVANCE BY CONSTRUCTION DIVISION. AT THAT TIME, THE CONTRACTOR SHALL PROVIDE A CONSTRUCTION SCHEDULE TO THE ENGINEER. ARRANGEMENTS FOR THE MEETING WILL BE COORDINATED BY THE DCMC-STREETS.

3. CONSTRUCTION SEQUENCE: UNLESS OTHERWISE DIRECTED OR APPROVED BY THE ENGINEER, THE CONSTRUCTION SHALL BE COMPLETED IN THE FOLLOWING SEQUENCE:

   CONSTRUCTION OF SIDEWALKS

   CONSTRUCTION OF NEW CURBS

   CONSTRUCTION OF NEW SIDEWALKS

   CONSTRUCTION OF ROADWAY PAVEMENT

   THE CONTRACTOR WILL BE PERMITTED TO MODIFY, ADJUST AND/OR COMBINE STAGES SUBJECT TO THE APPROVAL OF THE ENGINEER.

4. SUBSEQUENT STAGES MUST COMMENCE WITHIN SEVEN (7) CALENDAR DAYS OF THE COMPLETION OF THE PREVIOUS STAGE WITHIN EACH BLOCK, UNLESS OTHERWISE APPROVED BY THE CITY.

5. AFTER A SATISFACTORY START OF THE WORK AT ONE LOCATION, AS APPROVED BY THE ENGINEER, THE CONTRACTOR MAY BE PERMITTED TO ESTABLISH MULTIPLE WORK AREAS AS AND WHERE APPROVED BY THE ENGINEER.

6. PEDESTRIANS SHALL BE PROTECTED FROM ALL EXCAVATION AREAS, THROUGH THE USE OF AN APPROVED BARRIER, FENCING OR OTHER TEMPORARY DEVICE, AND IN A MANNER APPROVED BY THE ENGINEER.

7. TO PERMIT ADEQUATE VISIBILITY AT INTERSECTION AREAS ALL BARRICADES SHALL BE PLACED SO AS NOT TO HINDER PEDESTRIAN OR VEHICULAR SIGHT LINES. SIMILARLY, NO SHEETING SHALL EXTEND HIGHER THAN 24" ABOVE PAVEMENT LEVEL WITHIN 50 FEET OF AN INTERSECTION.

8. EXCAVATIONS SHALL BE COMPLETELY ENCLOSED WITH TIMBER CURBS, LIGHTED BARRICADES AND TEMPORARY FENCE UNLESS OTHERWISE SHOWN HEREIN OR DIRECTED BY THE ENGINEER. ALL BOUNDARIES BETWEEN CONSTRUCTION WORK AREAS AND PEDESTRIAN ROUTES ALONG SIDEWALKS SHALL BE CLEARLY AND CONTINUOUSLY DELINEATED WITH PEDESTRIAN STEEL BARRICADES AS SHOWN ON THE MAINTENANCE AND PROTECTION PLANS AND AS APPROVED OR DIRECTED BY THE ENGINEER.

9. PEDESTRIAN CROSSINGS OVER EXCAVATIONS, WHEN REQUIRED, SHALL BE CONSTRUCTED WITH STEEL PLATES LINED WITH TEMPORARY FENCE ATTACHED ON BOTH SIDES. (NO DIRECT PAYMENT).

10. MAINTENANCE OF PEDESTRIAN ACCESS TO ALL ABUTTING PROPERTIES, ENTRANCES, AND EXITS FROM DWELLINGS, EMERGENCY EXITS AND PEDESTRIAN USAGE OF CROSSWALK AND SIDEWALK AREAS BOTH NEW AND EXISTING SHALL BE CONTINUOUS AT ALL TIMES.

11. CONTRACTOR SHALL PROVIDE ACCESS FOR EMERGENCY TRAFFIC AT ALL TIMES UPON DEMAND. THE CONTRACTOR SHALL BE REQUIRED TO MOVE AND RESTORE BARRICADES AS ORDERED BY THE ENGINEER FOR EMERGENCY ACCESS AT NO DIRECT PAYMENT.

12. THE CONTRACTOR SHALL SUPPLY, INSTALL, RELOCATE AND MAINTAIN SIGNS AND OTHER APPROVED DEVICES FOR WARNING, CONTROLLING, ROUTING, DIRECTING AND DETOURING TRAFFIC AS INDICATED AND AS DIRECTED BY THE ENGINEER AND IN ACCORDANCE WITH "MANUAL ON UNIFORM TRAFFIC CONTROL DEVICES". THE EXACT LOCATION, SIZE, WORDING AND DETAILS OF THE SIGN, PLANTS AND MOUNTINGS, AND OTHER DEVICES SHALL BE SUBJECT TO APPROVAL BY THE ENGINEER.

13. ALL SIGNS AND BARRICADES SHALL CONFORM TO STANDARDS SPECIFIED IN THE NATIONAL "MANUAL OF UNIFORM TRAFFIC CONTROL DEVICES" (EXCEPT WHERE OTHERWISE REQUIRED HEREIN) WHERE APPLICABLE AND APPROVED BY THE ENGINEER.

14. ALL ADVANCE WARNING SIGNS SHALL BE INSTALLED BETWEEN 150 AND 200 FEET BEFORE THE CONSTRUCTION. ALL "END ROAD WORK" SIGNS SHALL BE INSTALLED 200 FEET AFTER THE CONSTRUCTION. TWO (2) 24"X24" ORANGE FLEXIBLE PLASTIC FLAGS SHALL BE ATTACHED TO THE TWO SIDE CORNERS OF EACH DIAMOND SHAPED ADVANCE WARNING SIGN.

15. ALL IDENTIFICATION MARKINGS ON BARRELS MUST NOT FACE TRAFFIC AND MUST BE BELOW THE BOTTOM REFLECTORIZED BAND.

16. THE CONTRACTOR IS REQUIRED TO INSTALL TEMPORARY PAVEMENT MARKINGS AFTER THE EXISTING MARKINGS ARE REMOVED. THIS OPERATION SHALL BE DONE ON THE SAME DAY. WHEN THE TEMPORARY MARKINGS ARE NO LONGER NECESSARY, THEY MUST BE OBLITERATED BY SCARIFICATION, UNTIL THEY ARE NO LONGER VISIBLE.

17. NOTWITHSTANDING PROVISIONS HEREIN CONTAINED, IT REMAINS THE CONTRACTOR'S RESPONSIBILITY TO IMPLEMENT MINOR ADDITIONAL MEASURES THAT ARE NECESSARY TO PROVIDE FOR AND MAINTAIN THE SAFETY OF VEHICULAR TRAFFIC AND PEDESTRIANS DURING CONSTRUCTION. THE PROVISION AND USE OF SUPPLIES SUCH AS TRAFFIC CONES, HIGH VISIBILITY RIBBONS, AND FLAGS WHERE NECESSARY OR DIRECTED BY THE ENGINEER, SHALL BE CONSIDERED AS MINOR AND INCIDENTAL ITEMS. PAYMENT TO BE INCLUDED IN THE PRICE BID FOR ALL SCHEDULED ITEMS.

18. IT IS THE CONTRACTOR'S RESPONSIBILITY TO COOPERATE WITH OTHER CONTRACTORS WHO HAVE AN ON-GOING STREET IMPROVEMENT CONSTRUCTION IN THE AREA AND/OR WITHIN THE PROJECT LIMITS AND SHALL DO ACCORDINGLY ARRANGE HIS OWN SCHEDULE OF CONSTRUCTION IN SUCH A TIME PHASE AS NOT TO OBSTRUCT OR INTERFERE WITH THE WORK/ABILITY OF EITHER MAINTENANCE OF TRAFFIC PLAN.

19. NO DEVIATION OR DEPARTURE FROM THESE STIPULATIONS WILL BE PERMITTED WITHOUT THE PRIOR WRITTEN APPROVAL FROM THE DCMC-STREETS. REQUEST FOR SUCH MODIFICATIONS SHALL BE SUBMITTED TO THE OFFICE OF CONSTRUCTION MITIGATION AND COORDINATION-STREETS N.Y.C.D.O.T., A MINIMUM OF TWENTY (20) DAYS IN ADVANCE FOR CONSIDERATION.

20. THE CONTRACTOR SHALL PROVIDE STORAGE AREAS OFF THE JOB SITE AS REQUIRED. (NO SEPARATE PAYMENT). SEE MAINTENANCE OF TRAFFIC CONSTRUCTION SIGNS, LEGEND, ETC., FOR MAINTENANCE OF TRAFFIC DEVICES REQUIRED AT THESE STORAGE AREAS.

21. AS THE WORK PROGRESSES, TEMPORARY TRAFFIC CONTROL DEVICES SHALL BE RELOCATED AND THE CONTRACTOR SHALL REMOVE OR COVER ALL UNUSED SIGNS OR SIGNS NOT APPLICABLE FOR CURRENT OPERATIONS.

22. FOR ADDITIONAL INFORMATION SEE: SPECIAL PROVISIONS OF THE SPECIFICATIONS, GENERAL NOTES, HIGHWAY NOTES, AND UTILITY NOTES, CONTAINED IN THE CONTRACT DRAWINGS.

23. THE CONTRACTOR IS REQUIRED TO MAINTAIN EXISTING BICYCLE FACILITIES WITH A SMOOTH RIDING SURFACE AND FREE OF DEBRIS OR OTHER IMPEDIMENTS, AT ALL TIMES. IF THIS IS NOT POSSIBLE A TEMPORARY BICYCLE DETOUR PLAN SHALL BE PREPARED BY THE CONTRACTOR AND SUBMITTED TO D.O.T. / O.C.M.C. FOR APPROVAL.

24. FOR ANY CHANGES IN PARKING REGULATIONS DURING THE CONSTRUCTION, IT IS THE CONTRACTOR'S RESPONSIBILITY TO INSTALL, MAINTAIN AND RELOCATE THE EXISTING SIGNS, IN ACCORDANCE WITH N.Y.C. - D.O.T. STIPULATIONS OF ADVANCED NOTICE.

25. THE CONTRACTOR SHALL NOTIFY NYCDOT 48 HOURS PRIOR TO THE START OF WORK TO HAVE A PARKING METERS AND /OR MINI-METERS REMOVED. CONTRACTOR SHALL CONTACT MR. JOHN PREMUS, ADMINISTRATIVE TRANSPORTATION COORDINATOR, NYC DEPARTMENT OF TRANSPORTATION, DIVISION OF TRAFFIC OPERATIONS, 58-50 57TH ROAD, 2ND FLOOR, MASPETH, NY 11378, PH# 718.894.1839, FAX# 718.894.8387, EMAIL: JPREMUS@DOT.NYC.GOV . THE FOLLOWING INFORMATION MUST BE GIVEN TO NYCDOT: [1] PARKING/MINI-METER NUMBERS; [2] LOCATION OF METERS AND [3] DATE WHEN METERS CAN BE RE-INSTALLED.

MPT-GI.2

CITY OF NEW YORK
DEPARTMENT OF DESIGN AND CONSTRUCTION

MPT-GI.2

MAINTENANCE AND PROTECTION OF TRAFFIC
FOR CONSTRUCTION OF GREEN INFRASTRUCTURE IN THE R.O.W.
MPT NOTES

CONSTRUCTION OF RIGHT-OF-WAY BIOSWALES

1. THE CONTRACTOR WILL BE PERMITTED TO OCCUPY ONE LANE OF THE ROADWAY IMMEDIATELY ADJACENT TO THE CURB TO EXCAVATE AND CONSTRUCT NEW BIOSWALES AS APPROVED AND DIRECTED BY THE ENGINEER.
2. THE CONTRACTOR SHALL INITIALIZE THE CONSTRUCTION OF NEW BIOSWALES IN A WORK AREA OF 45 FEET MAX, UNLESS DIRECTED AND APPROVED BY AN ENGINEER, AFTER A SATISFACTORY START OF THE WORK, AND AS APPROVED AND DIRECTED BY THE ENGINEER. THE CONTRACTOR WILL BE PERMITTED TO EXTEND THE WORK AREA TO THE MAXIMUM LENGTH OF 120 FEET FOR STREET SEGMENTS CONTAINING MULTIPLE BIOSWALES.
3. PLACE PLASTIC BARRELS TO DELINEATE THE WORK AREA WIDTH AND PEDESTRIAN STEEL BARRICADES FOR THE PROTECTION OF PEDESTRIANS AS SHOWN IN TYPICAL PLANS AND AS DIRECTED BY THE ENGINEER.
4. THE CONTRACTOR SHALL CLOSE THE SIDEWALK AND DIVERT PEDESTRIANS AROUND THE WORK AREA AS INDICATED ON THE PLANS OR AS DIRECTED BY THE ENGINEER.
5. MAINTENANCE OF PEDESTRIAN ACCESS TO ALL ABUTTING PROPERTIES, ENTRANCES AND EXITS FROM DWELLINGS, EMERGENCY EXIT AREAS SHALL BE CONTINUOUS AT ALL TIMES.
6. UPON COMPLETION OF EACH DAYS WORK THE CONTRACTOR SHALL RELOCATE THE BARRELS AND BARRICADES ADJACENT TO THE CURB. THERE SHALL BE NO DIRECT PAYMENT FOR THE DAILY RELOCATION OF BARREL AND BARRICADES HEREUNDER.
7. CONTRACTOR SHALL PROVIDE LOCAL PEDESTRIAN ACCESS AT ALL TIMES FOR NORMAL BUILDING ACTIVITY.
8. WORKING SIMULTANEOUSLY ON BOTH SIDES OF THE STREET WILL NOT BE PERMITTED.
9. CONTRACTOR SHALL MAINTAIN MPT AROUND BACKFILLED ROWS UNTIL INSTALL OF STEEL TREE PIT GUARD.
10. INLET AND OUTLETSHALL BE SAND BAGGED UNTIL COMPLETION OF ALL BACKFILLING AND JUTE MESH INSTALLATION AT BIOSWALES HAVE BEEN

CONSTRUCTION OF NEW CURBS

1. THE CONTRACTOR WILL BE PERMITTED TO OCCUPY ONE LANE OF THE ROADWAY IMMEDIATELY ADJACENT TO THE CURB LINE TO REMOVE EXISTING CURB AND CONSTRUCT NEW CURB AS APPROVED AND DIRECTED BY THE ENGINEER.
2. THE CONTRACTOR SHALL INITIALIZE THE CONSTRUCTION OF NEW CURBS IN A WORK AREA OF 200 FEET ONLY, AFTER A SATISFACTORY START OF THE WORK AS APPROVED AND DIRECTED BY THE ENGINEER. THE CONTRACTOR WILL BE PERMITTED TO EXTEND THE WORK AREA TO THE MAXIMUM LENGTH OF 600 FEET.
3. PLACE PLASTIC BARRELS TO DELINEATE THE WORK AREA WIDTH AND PEDESTRIAN STEEL BARRICADES FOR THE PROTECTION OF PEDESTRIANS AS SHOWN IN TYPICAL PLANS AND AS DIRECTED BY THE ENGINEER.
4. PLACE CONSTRUCTION SIGNS AS SHOWN IN TYPICAL PLANS AND AS REQUIRED BY THE ENGINEER.
5. MAINTENANCE OF PEDESTRIAN ACCESS TO ALL ABUTTING PROPERTIES, ENTRANCES AND EXITS FROM DWELLINGS, EMERGENCY EXIT AREAS SHALL BE CONTINUOUS AT ALL TIMES.
6. UPON COMPLETION OF CURB WORK AT EACH LOCATION THE CONTRACTOR SHALL BACKFILL AROUND CURB AND PLACE 4" ASPHALTIC CONCRETE MIXTURE TO RESTORE STREET. RESTORE SIDEWALK WITH 2" ASPHALTIC CONCRETE MIXTURE AT CORNERS ONLY WHERE DIRECTED BY THE ENGINEER. MAINTAIN PEDESTRIAN TRAFFIC AT CROSSWALK AREAS.
7. UPON COMPLETION OF EACH DAYS WORK THE CONTRACTOR SHALL RELOCATE THE BARRELS AND BARRICADES ADJACENT TO THE CURB. THERE SHALL BE NO DIRECT PAYMENT FOR THE DAILY RELOCATION OF BARREL AND BARRICADES HEREUNDER.
8. WORKING SIMULTANEOUSLY ON BOTH SIDES OF THE STREET WILL NOT BE PERMITTED.

CONSTRUCTION OF NEW SIDEWALKS

1. SIDEWALK CONSTRUCTION SHALL PROCEED IMMEDIATELY UPON COMPLETION OF CURB AS DIRECTED BY THE ENGINEER.
2. THE CONTRACTOR SHALL PROVIDE AND INSTALL BARRICADES, LIGHTS AND WARNING SIGNS TO DELINEATE THE WORK AREAS AS SHOWN ON PLAN.
3. THE CONTRACTOR WILL BE PERMITTED TO OCCUPY ONE LANE OF THE ROADWAY IMMEDIATELY ADJACENT TO THE CURB TO REMOVE EXISTING SIDEWALK AND CONSTRUCT NEW SIDEWALK AS APPROVED AND DIRECTED BY THE ENGINEER.
4. THE CONTRACTOR SHALL CLOSE THE SIDEWALK AND DIVERT PEDESTRIANS AROUND THE WORK AREA AS INDICATED ON THE PLANS OR AS DIRECTED BY THE ENGINEER.
5. THE CONTRACTOR SHALL FURNISH, INSTALL AND REMOVE TEMPORARY PEDESTRIAN PASSAGEWAYS, AND PROVIDE TEMPORARY PEDESTRIAN BRIDGES IN ACCORDANCE WITH TYPICAL PLAN TO FACILITATE THE FLOW OF PEDESTRIAN TRAFFIC AND ACCESS TO PRIVATE PROPERTY AS AND WHERE DIRECTED BY THE ENGINEER.
6. THE CONTRACTOR SHALL LIMIT THE EXTENT OF EXISTING SIDEWALK REMOVED EACH DAY TO THE SAME AREA OF CONCRETE SIDEWALK THAT WILL BE REPLACED THE FOLLOWING DAY. NO UNPROTECTED EXCAVATION SHALL REMAIN AT THE END OF EACH DAY'S WORK.
7. PROVIDE SMOOTH TRANSITION WITH ASPHALTIC CONCRETE MIXTURE BETWEEN SIDEWALK COMPLETED AND WORK YET TO BE STARTED.
8. CONTRACTOR SHALL PROVIDE LOCAL PEDESTRIAN ACCESS AT ALL TIMES FOR NORMAL BUILDING ACTIVITY.
9. AFTER COMPLETING THE WORK IN THE SIDEWALK AREA THE CONTRACTOR SHALL REMOVE ALL BARRICADES, LIGHTS, TEMPORARY SIGNS AND OTHER WARNING DEVICES AND ALL SURPLUS CONSTRUCTION MATERIAL, AND SHALL REOPEN THE SIDEWALK TO PEDESTRIAN TRAFFIC AS DIRECTED BY ENGINEER.

CONSTRUCTION OF ROADWAY PAVEMENT

1. MAINTAIN AT LEAST ONE PEDESTRIAN CROSSWALK AT EACH CORNER. PEDESTRIAN TRAFFIC SHALL BE DETOURED AROUND WORK ZONE.
2. MAINTENANCE OF PEDESTRIAN ACCESS TO ALL ABUTTING PROPERTIES, ENTRANCES AND EXITS FROM DWELLINGS, AND PEDESTRIAN USAGE OF THE SIDEWALK AREAS, SHALL BE CONTINUOUS AT ALL TIMES.
3. AFTER THE COMPLETION OF NEW PAVEMENT BASE AND CURING, RAMP AROUND MANHOLE HEADS WITH TEMPORARY ASPHALTIC MIXTURE, REMOVE BARRICADES, BARRELS AND OTHER TEMPORARY DEVICES AND OPEN THE ROADWAY FOR TRAFFIC, AS DIRECTED BY THE ENGINEER.
4. AFTER COMPLETION OF PAVEMENT IN THE WORK AREA, THE CONTRACTOR SHALL REMOVE BARRICADES, BARRELS, FENCING AND CONSTRUCTION SIGNS, OPEN FULL ROADWAY TO TRAFFIC AS DIRECTED BY THE ENGINEER.

MPT–GI.3

CITY OF NEW YORK
DEPARTMENT OF DESIGN AND CONSTRUCTION

MPT–GI.3

MAINTENANCE AND PROTECTION OF TRAFFIC

FOR CONSTRUCTION OF GREEN INFRASTRUCTURE IN THE R.O.W.
LEGEND AND NOTES

TEMPORARY TRAFFIC SIGNS TABLE

NAME	SIGN	MUTCD CODE	COLOR CODE	SIZE	DESCRIPTION
(A)		W20-1	A	36"X36"	ROAD WORK AHEAD
(B)		W20-2	A	36"X36"	DETOUR AHEAD
(C1)		M4-8	A	30"X24"	DETOUR (WITH ARROW)
(C2)		M4-8L	A	30"X24"	DETOUR (WITH LEFT ARROW)
(C3)		M4-8R	A	30"X24"	DETOUR (WITH RIGHT ARROW)
(DL)		W1-4L	A	30"X30"	LARGE ARROW KEEP LEFT
(DR)		W1-4R	A	30"X30"	LARGE ARROW KEEP RIGHT
(E)	ROAD CLOSED	R11-2	B	48"X30"	ROAD CLOSED
(F)		R11-3a	B	60"X30"	ROAD CLOSED (EXCEPT LOCAL & EMERGENCY TRAFFIC)
(GL)		W1-6L	A	48"X24"	ONE WAY (ARROW POINTING LEFT)
(GR)		W1-6R	A	48"X24"	ONE WAY (ARROW POINTING RIGHT)
(K)		R9-11	B	24"X12"	SIDEWALK CLOSED, CROSS HERE (WITH ARROW)
(L)		R9-10	B	24"X12"	SIDEWALK CLOSED, USE OTHER SIDE (WITH ARROW)
(M)		R3-2	B	24"X24"	NO LEFT TURN
(N)		R3-1	B	24"X24"	NO RIGHT TURN
(O)					END ROAD WORK
(P)		W6-3	A	30"X30"	TWO WAY TRAFFIC

TEMPORARY TRAFFIC SIGNS TABLE

NAME	SIGN	MUTCD CODE	COLOR CODE	SIZE	DESCRIPTION
(Q)		W4-2L W4-2R	A A	36"X36" 36"X36"	LANE REDUCTION TRANSITION SIGN
(R)	NO TURNS	R3-3	B	24"X24"	NO TURNS
(S)		W20-3	A	36"X36"	ROAD CLOSED AHEAD
(T)		M6-4	B	21"X15"	DOUBLE ARROW
(V)		M6-1	B	21"X15"	ARROW (LEFT OR RIGHT)
(W)	ONLY ONLY	R3-5	B	30"X36"	RIGHT (LEFT) TURN ONLY
(X)	SIDEWALK CLOSED	R9-9	B	24"X12"	SIDEWALK CLOSED, USE WALKWAY
(Y)		W20-5	A	36"X36"	LANE CLOSED AHEAD
(Z)		W20-7a	A	36"X36"	FLAGGER

COLOR CODE LEGEND

CODE	DESCRIPTION
A	BLACK LEGEND AND BORDER ON AN ORANGE BACKGROUND
B	BLACK LEGEND AND BORDER ON A WHITE BACKGROUND
C	WHITE LEGEND AND BORDER ON A GREEN BACKGROUND
D	WHITE LEGEND AND BORDER ON A RED BACKROUND
E	RED LEGEND AND BORDER ON A WHITE BACKGROUND
F	BLACK LEGEND AND BORDER ON A FLUORESCENT YELLOW GREEN BACKGROUND

NOTES:

1. ALL SIGNS AS PER LATEST EDITION OF THE NATIONAL "MANUAL ON UNIFORM TRAFFIC CONTROL DEVICES".
2. DIMENSIONS ARE SHOWN IN INCHES AND ARE SHOWN AS WIDTH x HEIGHT. THESE TABLES ARE FOR REFERENCE PURPOSES ONLY. FOR ADDITIONAL SIGNAGE NOT SHOWN ON THESE TABLES (REFER TO THE MUTCD).
4. ALL SIGNS TO BE REFLECTORIZED.
5. LETTERS ON SIGNS TO BE 6" HIGH.
6. SIGN LOCATION TO BE DETERMINED BY THE ENGINEER.
7. MOUNTING OF SIGNS TO BE AS DIRECTED AND APPROVED BY THE ENGINEER.

LEGEND

	CONSTRUCTION WORK AREA
	ONE WAY TRAFFIC (EXISTING)
	TWO-WAY TRAFFIC (EXISTING)
	TIMBER CURB (W/ ORANGE FENCING)
	PEDESTRIAN STEEL BARRICADE
	PLASTIC BARRELS
(A)	TEMPORARY SIGN WITH TEXT
R.O.W.	RIGHT OF WAY
ROWB	RIGHT-OF-WAY BIOSWALES

MPT-GI.4

CITY OF NEW YORK
DEPARTMENT OF DESIGN AND CONSTRUCTION

MPT-GI.4

MAINTENANCE AND PROTECTION OF TRAFFIC

FOR CONSTRUCTION OF GREEN INFRASTRUCTURE IN THE R.O.W.
DETAILS

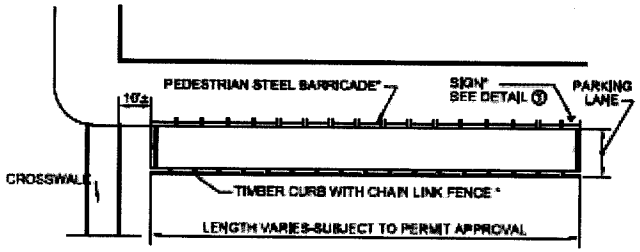

PLAN
N.T.S.

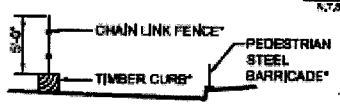

ALTERNATE Ⓐ
SECTION
N.T.S.



ALTERNATE Ⓑ
SECTION
N.T.S.

TEMPORARY STORAGE AREA
PROJECT NAME
CONTRACTOR'S NAME
FIELD OFFICE ADDRESS
TELEPHONE NOS.

DETAIL ①
INFORMATION SIGN

NOTES

- NO DIRECT PAYMENTS FOR MAINTENANCE OF TRAFFIC CONTROL DEVICES.
- PROVIDE TAPER AT APPROACH END TO CHANNELIZE TRAFFIC PER NYSDOT MUTCD.
- TIMBER CURB WITH CHAIN LINK FENCE TO BE USED FOR LONG TERM STORAGE. FOR SHORT TERM STORAGE USE PLASTIC BARRELS WITH ORANGE FENCING.

TEMPORARY STORAGE AREA

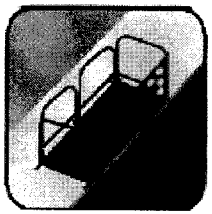

AFTER SOIL INSTALLATION, MULCH SHOULD BE PLACED ON THE ENGINEERED SOIL. PEDESTRIAN BARRICADES AND PROTECTIVE FENCING SHOULD BE INSTALLED UNTIL THE SITE IS FULLY PLANTED AND TREE GUARDS ARE INSTALLED.

TEMPORARY PROTECTION OF ROWB

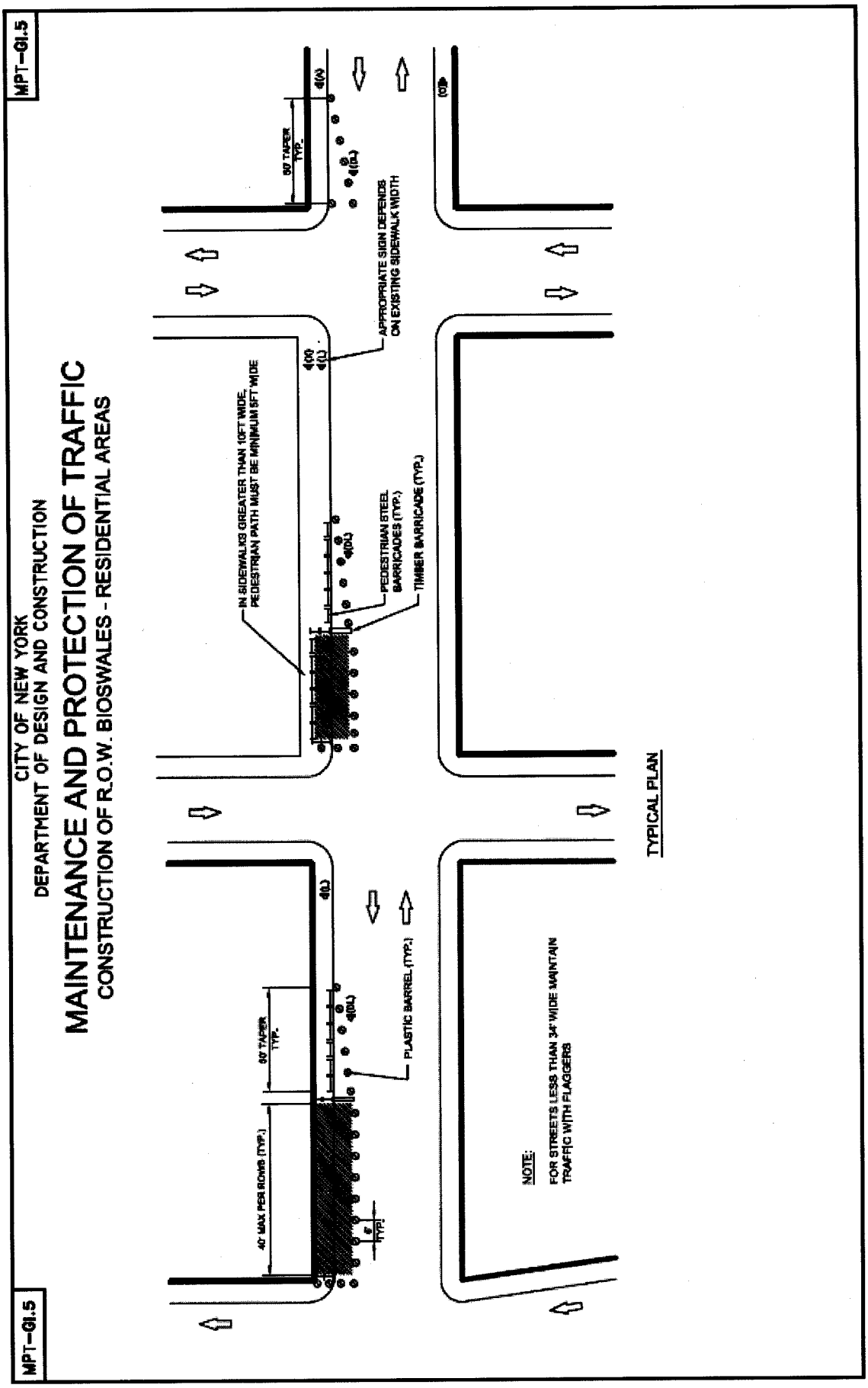
MPT-GI.5
CITY OF NEW YORK
DEPARTMENT OF DESIGN AND CONSTRUCTION
MAINTENANCE AND PROTECTION OF TRAFFIC
CONSTRUCTION OF R.O.W. BIOSWALES - RESIDENTIAL AREAS
MPT-GI.5
IN SIDEWALKS GREATER THAN 10FT WIDE, PEDESTRIAN PATH MUST BE MINIMUM 5FT WIDE
APPROPRIATE SIGN DEPENDS ON EXISTING SIDEWALK WIDTH
PEDESTRIAN STEEL BARRICADES (TYP.)
TIMBER BARRICADE (TYP.)
PLASTIC BARREL (TYP.)
40' MAX PER ROWS (TYP.)
50' TAPER TYP.
TYPICAL PLAN
NOTE:
FOR STREETS LESS THAN 34' WIDE MAINTAIN TRAFFIC WITH FLAGGERS

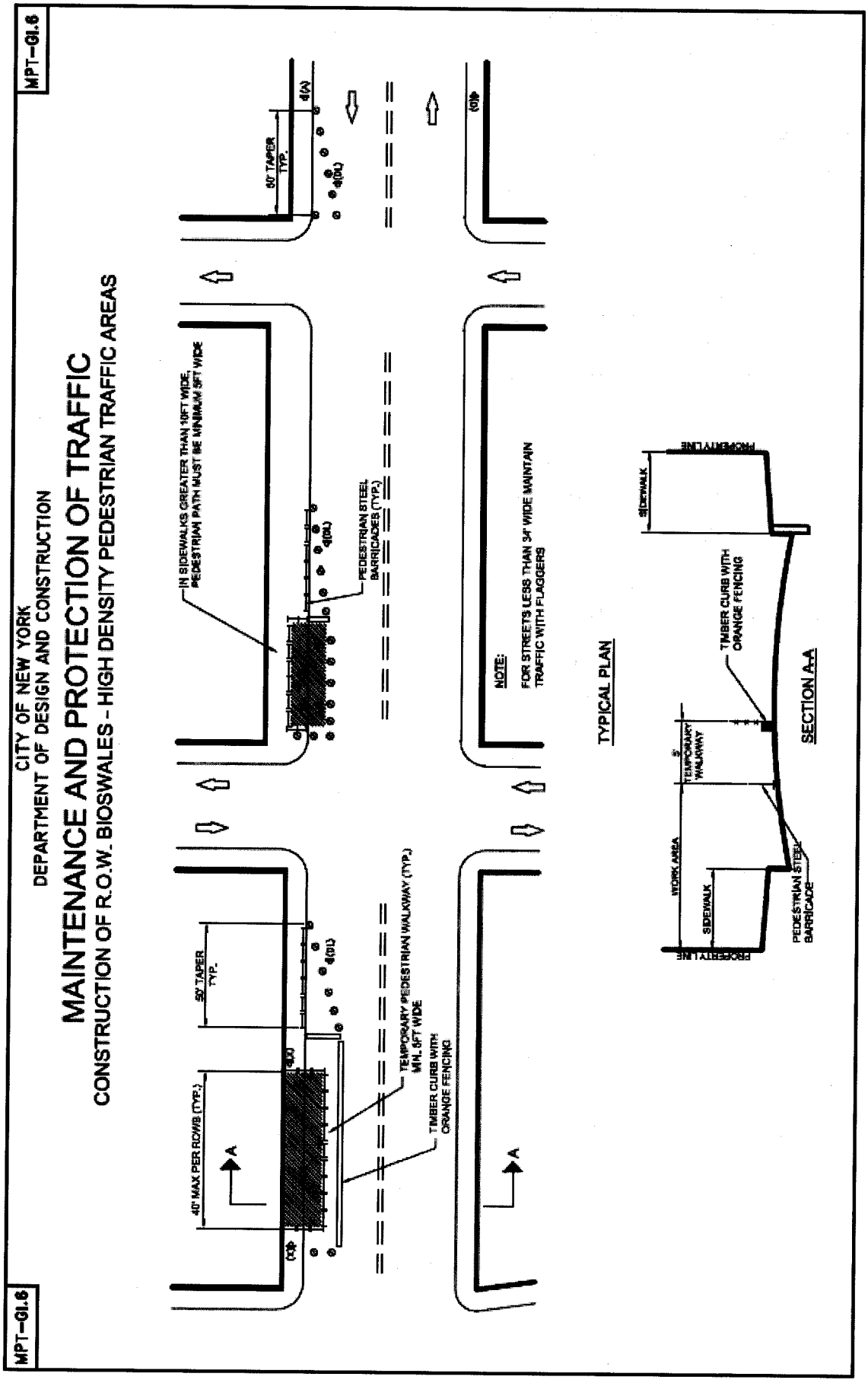
MPT-GI.6
CITY OF NEW YORK
DEPARTMENT OF DESIGN AND CONSTRUCTION
MAINTENANCE AND PROTECTION OF TRAFFIC
CONSTRUCTION OF R.O.W. BIOSWALES - HIGH DENSITY PEDESTRIAN TRAFFIC AREAS
MPT-GI.6
40' MAX PER ROWB (TYP.)
50' TAPER TYP.
TEMPORARY PEDESTRIAN WALKWAY (TYP.) MIN. 6FT WIDE
TIMBER CURB WITH ORANGE FENCING
IN SIDEWALKS GREATER THAN 10FT WIDE, PEDESTRIAN PATH MUST BE MINIMUM 6FT WIDE
PEDESTRIAN STEEL BARRICADES (TYP.)
50' TAPER TYP.
NOTE:
FOR STREETS LESS THAN 34' WIDE MAINTAIN TRAFFIC WITH FLAGGERS
TYPICAL PLAN
SIDEWALK
TEMPORARY WALKWAY
TIMBER CURB WITH ORANGE FENCING
WORK AREA
SIDEWALK
PEDESTRIAN STEEL BARRICADE
SECTION A-A

NEW YORK CITY DOT Department of Transportation

JANETTE SADIK-KHAN, Commissioner

OCMC TRAFFIC STIPULATIONS

November 21, 2013

OCMC FILE NO: CEC-13-533
CONTRACT NO: ALL BIOSWALE CONTRACTS, CITYWIDE
PROJECT: BIOSWALE INSTALLATION, CITYWIDE
LOCATION(S): VARIOUS, CITYWIDE

PERMISSION IS HEREBY GRANTED TO ENTER UPON AND RESTRICT THE FLOW OF TRAFFIC AT THE ABOVE LOCATION AND ITS LOCAL ADJACENT STREETS FOR THE PURPOSE OF CARRYING OUT THE ABOVE NOTED PROJECT, SUBJECT TO THE STIPULATIONS, AS NOTED BELOW:

A. **SPECIAL STIPULATIONS**

1. **EMBARGOES** – A CONSTRUCTION EMBARGO WILL APPLY TO THOSE LOCATIONS BELOW WHICH FALL WITHIN THE **HOLIDAY EMBARGO** OR ANY OTHER SPECIAL EVENT EMBARGOES AS PUBLISHED BY THE BUREAU OF PERMIT MANAGEMENT AND CONSTRUCTION CONTROL.
2. **BIKE LANES** – IF WORK IS IN OR AFFECTING A BIKE LANE, THE CONTRACTOR MUST POST ADVANCE WARNING SIGNS 350 FEET AND 200 FEET PRIOR TO THE WORK ZONE STATING **"CONSTRUCTION IN BIKE LANE AHEAD PROCEED WITH CAUTION"**, AND ALSO POST A SIGN AT THE WORK ZONE STATING **"CONSTRUCTION IN BIKE LANE PROCEED WITH CAUTION"**. SUCH SIGNS SHALL BE ORANGE, 3' X 3', DIAMOND-SHAPED WITH 4" BLACK LETTERING. SIGNS SHALL BE POSTED IN ACCORDANCE WITH THE FEDERAL MANUAL ON UNIFORM TRAFFIC CONTROL DEVICES (MUTCD).
3. **BIKE SHARE STATIONS:** THE PERMITTEE SHALL NOT REMOVE, RELOCATE, DAMAGE OR DISRUPT THE OPERATION OF EXISTING BIKE SHARE STATIONS WITHOUT FIRST CONTACTING NYC BIKE SHARE AT 855-245-3311 FOR THEIR REQUIREMENTS PRIOR TO COMMENCING WORK.
4. **BUS STOPS** – THE CONTRACTOR SHALL PROVIDE WRITTEN NOTICE TO NYC DOT OCMC AND NEW YORK CITY TRANSIT (NYCT) A MINIMUM OF FIVE (5) WEEKS IN ADVANCE FOR LANE/STREET CLOSURES THAT AFFECT BUS ROUTES/BUS STOPS.
5. **STREET LIGHTS / TRAFFIC SIGNALS:** THE PERMITTEE SHALL NOT REMOVE OR RELOCATE EXISTING STREET LIGHTS OR TRAFFIC SIGNALS WITHOUT FIRST OBTAINING APPROVAL FROM NYCDOT STREET LIGHTING / TRAFFIC SIGNALS UNIT.
6. **TRAFFIC CAMERAS, DETECTION/COMMUNICATION EQUIPMENT:** IF AT ANY TIME DURING THE APPROVED WORK, THE PERMITTEE ENCOUNTERS TRAFFIC SURVEILLANCE CAMERAS, DETECTION EQUIPMENT OR ANY TYPE OF COMMUNICATION EQUIPMENT (WIRELESS OR HARD-WIRED) ON ANY NYC DOT FACILITY, THAT IS NOT INCLUDED ON THE DESIGN/BUILD DRAWINGS, THE PERMITTEE SHALL IMMEDIATELY NOTIFY NYC DOT TRAFFIC MANAGEMENT BY PHONE AT 718-433-3390 OR 718-433-3340 AND VIA EMAIL AT TMC@DOT.NYC.GOV AND AWAIT DIRECTION PRIOR TO CONTINUING WORK.
7. **METERS** – THE PERMITTEE SHALL NOT REMOVE OR RELOCATE PARKING METERS WITHOUT FIRST OBTAINING APPROVAL FROM NYCDOT PARKING METER DIVISION AT 718 – 894 – 8651.
8. **TEST PITS** – THE BELOW TRAFFIC STIPULATIONS DO NOT APPLY TO TEST PIT WORK RELATED TO THIS CONTRACT. WORK HOURS AND OTHER REQUIREMENTS FOR TEST PIT OPERATIONS MAY DIFFER FROM THE STIPULATIONS IDENTIFIED BELOW. THE PERMITTEE SHALL BE REQUIRED TO OBTAIN SEPARATE PERMITS RELATED TO TEST PITS.
9. **ACCESS TO ABUTTING PROPERTIES** – THE PERMITTEE SHALL COORDINATE ALL ACTIVITIES WITH ABUTTING PROPERTY OWNERS TO ENSURE ACCESS IS PROVIDED TO/FROM ENTRANCES/DRIVEWAYS AT ALL TIMES.
10. **AUTHORIZED PARKING** – PRIOR TO PERFORMING WORK WHICH IMPACTS AUTHORIZED PARKING, THE PERMITTEE SHALL SUBMIT IN WRITING, AND COPY OCMC-STREETS, A REQUEST TO OCCUPY SPACE CURRENTLY USED BY AUTHORIZED VEHICLES. APPROVAL MUST BE RECEIVED FROM AUTHORIZED PARKING PRIOR TO OCCUPYING THESE AREAS.
11. **NOTIFICATION** – THE PERMITTEE MUST AT LEAST TWO (2) WORKING DAYS BEFORE THE START OF CONSTRUCTION NOTIFY THE NYC FIRE DEPARTMENT, NYC POLICE DEPARTMENT, NYCEMS, LOCAL COMMUNITY BOARD, BOROUGH PRESIDENT'S OFFICE-CHIEF ENGINEER, NYCDOT OCMC OFFICE, AND ALL ABUTTING PROPERTY OWNERS.
12. **STIPULATION CHANGES** – IF ANY OF THESE REQUIREMENTS, INCLUDING THE REQUIREMENTS LISTED BELOW, CANNOT BE MET, A REQUEST FOR MODIFICATIONS SHALL BE SUBMITTED IN WRITING TO OCMC-STREETS BY THE ENGINEER-IN-CHARGE FOR THE AGENCY PERFORMING THE WORK TO DETERMINE THE APPROPRIATE MAINTENANCE AND PROTECTION OF TRAFFIC.

NYC Department of Transportation
Bureau of Permit Management and Construction Control
55 Water Street - 7th Floor, New York, NY 10041
T: 212.839.9621 F: 212.839.8970
www.nyc.gov/dot

OCMC FILE NO: BNEC-13-533
CONTRACT NO: ALL BIOSWALE CONTRACTS, CITYWIDE
PROJECT: VARIOUS, CITYWIDE

B. MAINTENANCE AND PROTECTION OF TRAFFIC

DEFINITION: For the purposes of this traffic stipulation sheet, the term "Critical Roadways" shall pertain to those roadways listed in the NYCDOT Highway Rules, where work restrictions apply during specific hours of the day.

NON-CRITICAL ROADWAYS

ROADWAYS UP TO 44 FEET IN WIDTH:

- Working hours shall be as follows: 7:00 AM to 6:00 PM, Monday to Friday (9:00 AM to 2:00 PM, Monday to Friday if working within a school zone) and 8:00 AM to 4:00 PM Saturday.
- Should "No Standing" rush hour regulations apply adjacent to/or opposite the construction zone, work is restricted during the hours specified on the posted regulation. *OCMC-Streets should be contacted in writing by the engineer-in-charge only if they are requesting a waiver and consideration to work during the restricted hours.*
- A school variance (VAR001) is granted to work during school hours as stipulated by OCMC-Streets. The contractor must notify the school principal in writing 48 hours prior to beginning any work.
- During work hours, the contractor shall fully close the sidewalk and post signs meeting NYCDOT specifications for directing pedestrians to the opposite sidewalk.
- During working hours, the contractor shall maintain one 11-foot lane for traffic on one-way streets, and two 11-foot lanes for traffic, (one 11-foot lane in each direction) on two-way streets.
- After working hours, the contractor shall maintain either a minimum 5-foot clear sidewalk or a 5-foot protected pedestrian walkway in the roadway adjacent the work zone for pedestrians. Occupancy of no stopping zones, no standing anytime zones and authorized parking is prohibited. If a pedestrian walkway in the roadway is used, it shall be ramped at entry for handicapped access. All crosswalks must be opened to pedestrians.
- The contractor shall not work on opposite sidewalks/curbs simultaneously.

ROADWAYS 45 FEET OR GREATER IN WIDTH:

- Working hours shall be as follows: 7:00 AM to 6:00 PM, Monday to Friday (9:00 AM to 2:00 PM, Monday to Friday if working within a school zone) and 8:00 AM to 4:00 PM Saturday.
- Should "No Standing" rush hour regulations apply adjacent to/or opposite the construction zone, work is restricted during the hours specified on the posted regulation. *OCMC-Streets should be contacted in writing by the engineer-in-charge only if they are requesting a waiver and consideration to work during the restricted hours.*
- A school variance (VAR001) is granted to work during school hours as stipulated by OCMC-Streets. The contractor must notify the school principal in writing 48 hours prior to beginning any work.
- The contractor shall maintain shall maintain either a minimum 5-foot clear sidewalk or a 5-foot protected pedestrian walkway in the roadway adjacent the work zone for pedestrians. The pedestrian walkway shall be ramped at entry for handicapped access. Occupancy of no stopping zones, no standing anytime zones and authorized parking is prohibited.
- During working hours, the contractor shall occupy 11-feet of the roadway adjacent to the curb, including the pedestrian walkway, while maintaining one 11-foot lane for traffic on one way streets and two 11-foot lanes for traffic (one 11-foot lane in each direction) on two-way streets.
- After working hours, the contractor may occupy 8-feet adjacent to curb, including the pedestrian walkway, and all crosswalks must be opened to pedestrians. Occupancy of no stopping zones, no standing anytime zones and authorized parking is prohibited.
- The contractor shall not work on opposite sidewalks/curbs simultaneously.

CRITICAL ROADWAYS

NOTE: on some critical roadways with high pedestrian/vehicular volumes (e.g. Times Square, Downtown Brooklyn, Queensboro Plaza) OCMC-Streets reserves the right to determine the appropriate maintenance and protection of traffic in consultation with the engineer-in-charge for the agency performing the work. In these locations, the stipulations identified in CEC-13-533 may not be used.

- Working hours shall be as follows: 9:00 AM to 4:00 PM, Monday to Friday (9:00 AM to 2:00 PM, Monday to Friday if working within a school zone) and 8:00 AM to 4:00 PM Saturday.
- Should "No Standing" rush hour regulations apply adjacent to/or opposite the construction zone, work is restricted during the hours specified on the posted regulation. *OCMC-Streets should be contacted in writing by the engineer-in-charge only if they are requesting a waiver and consideration to work during the restricted hours.*
- The contractor shall maintain shall maintain either a minimum 5-foot clear sidewalk or a 5-foot protected pedestrian walkway in the roadway adjacent the work zone for pedestrians. The pedestrian walkway shall be ramped at entry for handicapped access. Occupancy of no stopping zones, no standing anytime zones and authorized parking is prohibited.
- During working hours, the contractor shall occupy 11-feet of the roadway adjacent to the curb, including the pedestrian walkway, while maintaining one 11-foot lane for traffic on one way streets and two 11-foot lanes for traffic (one 11-foot lane in each direction) on two-way streets.

OCMC FILE NO: BNEC-13-533
CONTRACT NO: ALL BIOSWALE CONTRACTS, CITYWIDE
PROJECT: VARIOUS, CITYWIDE

- After working hours, the contractor may occupy 8-feet adjacent to curb, including the pedestrian walkway, and all crosswalks must be opened to pedestrians. Occupancy of no stopping zones, no standing anytime zones and authorized parking is prohibited.
- The contractor shall not work on opposite sidewalks/curbs simultaneously.

C. GENERAL NOTES

1. **THIS IS NOT A PERMIT.** THIS STIPULATION SHEET MUST BE SUBMITTED WITH ALL REQUESTS FOR PERMITS PERTAINING TO THE ABOVE CONTRACT AND PRESENT AT THE WORK SITE ALONG WITH ALL ACTIVE CONSTRUCTION PERMITS WHEN THE APPROVED WORK IS BEING PERFORMED.
2. ALL RELOCATION WORK BY THE UTILITIES SUCH AS; CON EDISON, TELEPHONE, GAS AND CABLE COMPANIES SHALL PRECEDE THE CONTRACTORS' START OF WORK ON ALL AFFECTED ROADWAYS IN THE IMPACTED CONTRACT AREA.
3. THE CONTRACTOR IS ADVISED THAT OTHER CONTRACTORS MAY BE WORKING IN THE GENERAL AREA DURING THE TERM OF THIS STIPULATION. IN WHICH EVENT, THE CONTRACTOR MAY REQUIRE MODIFICATIONS BY THE OCMC-STREETS.
4. THE PERMITTEE IS NOT AUTHORIZED TO ENTER, OCCUPY OR USE ANY PUBLICLY-OWNED OR PRIVATELY OWNED, NON-PAVED, LANDSCAPE OR NON-LANDSCAPED LOCATION WITHOUT SPECIFIC WRITTEN PERMISSION. WHEN THE LOCATION IS WITHIN THE RIGHT-OF-WAY OF A LIMITED-ACCESS ARTERIAL HIGHWAY, **WRITTEN** APPROVAL FROM THE NYCDOT OCMC-HIGHWAYS IS REQUIRED. WHEN THE LOCATION IS WITHIN THE RIGHT-OF-WAY OF A PUBLIC STREET OR PUBLIC PARK, **WRITTEN** APPROVAL FROM THE NEW YORK CITY DEPARTMENT OF TRANSPORTATION OR NEW YORK CITY DEPARTMENT OF PARKS AND RECREATION IS REQUIRED. WHEN THE LOCATION IS WITHIN THE RIGHT-OF-WAY OF ANY OTHER JURISDICTION SUCH AS PRIVATE PROPERTY, STATE, FEDERAL ETC., IT IS THE PERMITTEE'S RESPONSIBILITY TO DETERMINE THE PROPERTY OWNER AND OBTAIN THE WRITTEN APPROVAL.
5. THE PERMITTEE SHALL ADHERE TO THE NYCDOT BUREAU OF BRIDGES' SPECIAL PROVISIONS FOR LANDSCAPE PROTECTION, MAINTENANCE AND RESTORATION, ITEMS 1.18.15 THROUGH 1.18.19, WHENEVER AND WHEREVER ANY OF THE PERMITTEE'S ACTIVITIES OCCUR WITHIN A LIMITED ACCESS ARTERIAL HIGHWAY RIGHT - OF - WAY.
6. NO DEVIATION OR DEPARTURE FROM THESE STIPULATIONS WILL BE PERMITTED WITHOUT THE PRIOR WRITTEN APPROVAL FROM THE OCMC-STREETS. REQUEST FOR SUCH MODIFICATIONS SHALL BE SUBMITTED TO THE OFFICE OF THE OCMC-STREETS, NEW YORK CITY DEPARTMENT OF TRANSPORTATION, A MINIMUM OF TWENTY (20) DAYS IN ADVANCE FOR CONSIDERATION.
7. FOR THIS PROJECT THE CONTRACTOR SHALL FURNISH, INSTALL AND MAINTAIN ALL NECESSARY ADVANCE WARNING AND DETOUR SIGNS, TEMPORARY CONTROL DEVICES, BARRICADES, LIGHTS AND FLASHING ARROW BOARDS IN ACCORDANCE WITH THE "MANUAL ON UNIFORM TRAFFIC CONTROL DEVICES," THE TYPICAL SCHEMES INCLUDED IN THIS SPECIFICATION; AND AS ORDERED BY THE ENGINEER-IN-CHARGE AND THE OCMC-STREETS.
8. THE CONTRACTOR SHALL BE RESPONSIBLE FOR IDENTIFYING HIS CONSTRUCTION SIGNAGE. THE IDENTIFICATION SHALL INCLUDE THE CONTRACTOR'S NAME, SPONSORING AGENCY NAME AND THE CONTRACT NUMBER. THE IDENTIFICATION SHALL BE PLACED ON THE BACK OF THE SIGN. THE LETTERING SHALL BE THREE (3) INCHES HIGH.
9. THE OCMC-STREETS RESERVES THE RIGHT TO VOID OR MODIFY THESE STIPULATIONS SHOULD CONSTRUCTION FAIL TO COMMENCE WITHIN TWO (2) YEARS OF THE SIGNED DATE OF THESE STIPULATIONS.
10. THE CONTRACTOR MUST COMPLY WITH ALL CONSTRUCTION EMBARGOS ISSUED BY THE NYCDOT INCLUDING THE HOLIDAY EMBARGO.

JOSEPH P. MOTO
EXECUTIVE DIRECTOR
OCMC-STREETS

JPN/mda

NEW YORK CITY DOT

Department of Transportation

POLLY TROTTENBERG, Commissioner

OCMC TRAFFIC STIPULATIONS - AMENDMENT # 1

SEPTEMBER 12, 2014

OCMC FILE NO: CEC-13-533
CONTRACT NO: ALL BIOSWALE CONTRACTS, CITYWIDE
PROJECT: BIOSWALE INSTALLATION, CITYWIDE

LOCATION(S): VARIOUS, CITYWIDE

STIPULATIONS ORIGINALLY DATED **November 21, 2013** GRANTING PERMISSION TO ENTER UPON AND RESTRICT THE FLOW OF TRAFFIC AT THE ABOVE LOCATION AND ITS LOCAL ADJACENT STREETS FOR THE PURPOSE OF CARRYING OUT THE ABOVE NOTED PROJECT, IS HEREBY AMENDED AS FOLLOWS:

A. SPECIAL STIPULATIONS

1. **EMBARGOES** – A CONSTRUCTION EMBARGO WILL APPLY TO THOSE LOCATIONS BELOW WHICH FALL WITHIN THE **HOLIDAY EMBARGO** OR ANY OTHER SPECIAL EVENT EMBARGOES AS PUBLISHED BY THE BUREAU OF PERMIT MANAGEMENT AND CONSTRUCTION CONTROL.
2. **BIKE LANES** – IF WORK IS IN OR AFFECTING A BIKE LANE, THE PERMITTEE MUST POST ADVANCE WARNING SIGNS 350 FEET AND 200 FEET PRIOR TO THE WORK ZONE STATING **"CONSTRUCTION IN BIKE LANE AHEAD PROCEED WITH CAUTION"**, AND ALSO POST A SIGN AT THE WORK ZONE STATING **"CONSTRUCTION IN BIKE LANE PROCEED WITH CAUTION"**. SUCH SIGNS SHALL BE ORANGE, 3' X 3', DIAMOND-SHAPED WITH 4" BLACK LETTERING. SIGNS SHALL BE POSTED IN ACCORDANCE WITH THE FEDERAL MANUAL ON UNIFORM TRAFFIC CONTROL DEVICES (MUTCD).
3. **BIKE SHARE STATIONS:** THE PERMITTEE SHALL NOT REMOVE, RELOCATE, DAMAGE OR DISRUPT THE OPERATION OF EXISTING BIKE SHARE STATIONS WITHOUT FIRST CONTACTING NYC BIKE SHARE AT 855-245-3311 FOR THEIR REQUIREMENTS PRIOR TO COMMENCING WORK.
4. **BUS STOPS** – THE PERMITTEE SHALL PROVIDE WRITTEN NOTICE TO NYC DOT OCMC AND NEW YORK CITY TRANSIT (NYCT) A MINIMUM OF FIVE (5) WEEKS IN ADVANCE FOR LANE/STREET CLOSURES THAT AFFECT BUS ROUTES/BUS STOPS.
5. **STREET LIGHTS / TRAFFIC SIGNALS:** THE PERMITTEE SHALL NOT REMOVE OR RELOCATE EXISTING STREET LIGHTS OR TRAFFIC SIGNALS WITHOUT FIRST OBTAINING APPROVAL FROM NYCDOT STREET LIGHTING / TRAFFIC SIGNALS UNIT.
6. **TRAFFIC CAMERAS, DETECTION/COMMUNICATION EQUIPMENT:** IF AT ANY TIME DURING THE APPROVED WORK, THE PERMITTEE ENCOUNTERS TRAFFIC SURVEILLANCE CAMERAS, DETECTION EQUIPMENT OR ANY TYPE OF COMMUNICATION EQUIPMENT (WIRELESS OR HARD-WIRED) ON ANY NYC DOT FACILITY, THAT IS NOT INCLUDED ON THE DESIGN/BUILD DRAWINGS, THE PERMITTEE SHALL IMMEDIATELY NOTIFY NYC DOT TRAFFIC MANAGEMENT BY PHONE AT 718-433-3390 OR 718-433-3340 AND VIA EMAIL AT TMC@DOT.NYC.GOV AND AWAIT DIRECTION PRIOR TO CONTINUING WORK.
7. **METERS** – THE PERMITTEE SHALL NOT REMOVE OR RELOCATE PARKING METERS WITHOUT FIRST OBTAINING APPROVAL FROM NYCDOT PARKING METER DIVISION AT 718 – 894 – 8651.
8. **ACCESS TO ABUTTING PROPERTIES** – THE PERMITTEE SHALL COORDINATE ALL ACTIVITIES WITH ABUTTING PROPERTY OWNERS TO ENSURE ACCESS IS PROVIDED TO/FROM ENTRANCES/DRIVEWAYS AT ALL TIMES.
9. **AUTHORIZED PARKING** – PRIOR TO PERFORMING WORK WHICH IMPACTS AUTHORIZED PARKING, THE PERMITTEE SHALL SUBMIT IN WRITING, AND COPY OCMC-STREETS, A REQUEST TO OCCUPY SPACE CURRENTLY USED BY AUTHORIZED VEHICLES. APPROVAL MUST BE RECEIVED FROM AUTHORIZED PARKING PRIOR TO OCCUPYING THESE AREAS.
10. **NOTIFICATION** – THE PERMITTEE MUST AT LEAST TWO (2) WORKING DAYS BEFORE THE START OF CONSTRUCTION NOTIFY THE NYC FIRE DEPARTMENT, NYC POLICE DEPARTMENT, NYCEMS, LOCAL COMMUNITY BOARD, BOROUGH PRESIDENT'S OFFICE-CHIEF ENGINEER, NYCDOT OCMC OFFICE, AND ALL ABUTTING PROPERTY OWNERS.
11. **STIPULATION CHANGES** – IF ANY OF THESE REQUIREMENTS, INCLUDING THE REQUIREMENTS LISTED BELOW, CANNOT BE MET, A REQUEST FOR MODIFICATIONS SHALL BE SUBMITTED IN WRITING TO OCMC-STREETS BY THE ENGINEER-IN-CHARGE FOR THE

NYC Department of Transportation
Bureau of Permit Management and Construction Control
55 Water Street - 7th Floor, New York, NY 10041
T: 212.839.9621 F: 212.839.8970
www.nyc.gov/dot

B. MAINTENANCE AND PROTECTION OF TRAFFIC

DEFINITION: For the purposes of this traffic stipulation sheet, the term "Critical Roadways" shall pertain to those roadways listed in the NYCDOT Highway Rules, where work restrictions apply during specific hours of the day.

NON-CRITICAL ROADWAYS

ROADWAYS UP TO 44 FEET IN WIDTH:

- Working hours shall be as follows: 7:00 AM to 6:00 PM, Monday to Friday (9:00 AM to 2:00 PM, Monday to Friday if working within a school zone) and 8@0 AM to 4:00 PM Saturday
- Should "No Standing" rush hour regulations apply adjacent to/or opposite the construction zone, work is restricted during the hours specified on the posted regulation. *OCMC should be contacted only if the Resident Engineer is requesting a waiver and consideration to work during the restricted hours.*
- A school variance (VAR001) is granted to work during school hours as stipulated by OCMC-Streets. The contractor must notify the school principal in writing 48 hours prior to beginning any work.
- During work hours, the contractor shall fully close the sidewalk and post signs meeting NYCDOT specifications for directing pedestrians to the opposite sidewalk.
- During working hours, the contractor shall maintain 1-11 foot lane for traffic on one-way streets, and 2-11 foot lanes for traffic, 1-11 foot lanes in each direction, on two-way streets.
- After working hours, the contractor shall maintain either a minimum 5-foot clear sidewalk or a 5-foot protected pedestrian walkway in the roadway adjacent to the work zone for pedestrians. Occupancy of no stopping zones, no standing anytime zones and authorized parking is prohibited. If a pedestrian walkway in the roadway is used, it shall be ramped at entry for handicapped access. All crosswalks must be opened to pedestrians.
- The contractor shall not work on opposite sidewalks/curbs simultaneously.

ROADWAYS 45 FEET OR GREATER IN WIDTH:

- Working hours shall be as follows: 7:00 AM to 6:00 PM, Monday to Friday (9:00 AM to 2:00 PM, Monday to Friday if working within a school zone) and 8@0 AM to 4:00 PM Saturday
- Should "No Standing" rush hour regulations apply adjacent to/or opposite the construction zone, work is restricted during the hours specified on the posted regulation. *OCMC should be contacted only if the Resident Engineer is requesting a waiver and consideration to work during the restricted hours.*
- A school variance (VAR001) is granted to work during school hours as stipulated by OCMC-Streets. The contractor must notify the school principal in writing 48 hours prior to beginning any work.
- The contractor shall maintain either a minimum 5-foot clear sidewalk or a 5-foot protected pedestrian walkway in the roadway adjacent to the work zone for pedestrians. The pedestrian walkway shall be ramped at entry for handicapped access. Occupancy of no stopping zones, no standing anytime zones and authorized parking is prohibited. All crosswalks must be opened to pedestrians.
- During working hours, the contractor shall occupy 11 feet of the roadway adjacent to the curb, including the pedestrian walkway, while maintaining one 11-foot lane for traffic on one-way streets and two 11-foot lanes for traffic (one 11-foot lane in each direction) on two-way streets.
- After working hours, the contractor may occupy 8 feet adjacent to the curb, including the pedestrian walkway, and all crosswalks must be opened to pedestrians. Occupancy of no stopping zones, no standing anytime zones and authorized parking is prohibited.
- The contractor shall not work on opposite sidewalks/curbs simultaneously.

B. MAINTENANCE AND PROTECTION OF TRAFFIC (CONTINUED)

CRITICAL ROADWAYS

NOTE: On some critical roadways with high pedestrian/vehicular volumes (e.g. Times Square, Downtown Brooklyn, Queensboro Plaza) OCMC-Streets reserves the right to determine the appropriate maintenance and protection of traffic in consultation with the engineer-in-charge for the agency performing the work. In these locations, the stipulations identified in CEC-13-533 may not be used.

- Working hours shall be as follows: 9:00 AM to 4:00 PM, Monday to Friday (9:00 AM to 2:00 PM, Monday to Friday if working within a school zone) and 8@0 AM to 4:00 PM Saturday
- Should "No Standing" rush hour regulations apply adjacent to/or opposite the construction zone, work is restricted during the hours specified on the posted regulation. *OCMC should be contacted only if the Resident Engineer is requesting a waiver and consideration to work during the restricted hours.*
- A school variance (VAR001) is granted to work during school hours as stipulated by OCMC-Streets. The contractor must notify the school principal in writing 48 hours prior to beginning any work.
- The contractor shall maintain either a minimum 5-foot clear sidewalk or a 5-foot protected pedestrian walkway in the roadway adjacent to the work zone for pedestrians. The pedestrian walkway shall be ramped at entry for handicapped access. Occupancy of no stopping zones, no standing anytime zones and authorized parking is prohibited.
- During working hours, the contractor shall occupy 11 feet of the roadway adjacent to the curb, including the pedestrian walkway, while maintaining one 11-foot lane for traffic on one-way streets and two 11-foot lanes for traffic (one 11-foot lane in each direction) on two-way streets.
- After working hours, the contractor may occupy 8 feet adjacent to the curb, including the pedestrian walkway, and all crosswalks must be opened to pedestrians. Occupancy of no stopping zones, no standing anytime zones and authorized parking is prohibited.
- The contractor shall not work on opposite sidewalks/curbs simultaneously.

C. GENERAL NOTES

1. **THIS IS NOT A PERMIT.** THIS STIPULATION SHEET MUST BE SUBMITTED WITH ALL REQUESTS FOR PERMITS PERTAINING TO THE ABOVE CONTRACT AND PRESENT AT THE WORK SITE ALONG WITH ALL ACTIVE CONSTRUCTION PERMITS WHEN THE APPROVED WORK IS BEING PERFORMED.
2. **ALL OTHER STIPULATIONS UNDER ORIGINAL NYCDOT STIPULATIONS SHEET CEC-13-533 DATED 11/21/13 WHICH HAVE NOT BEEN CHANGED BY THIS AMENDMENT REMAIN IN EFFECT.**
3. ALL RELOCATION WORK BY THE UTILITIES SUCH AS; CON EDISON, TELEPHONE, GAS AND CABLE COMPANIES SHALL PRECEDE THE CONTRACTORS' START OF WORK ON ALL AFFECTED ROADWAYS IN THE IMPACTED CONTRACT AREA.
4. THE CONTRACTOR IS ADVISED THAT OTHER CONTRACTORS MAY BE WORKING IN THE GENERAL AREA DURING THE TERM OF THIS STIPULATION. IN WHICH EVENT, THE CONTRACTOR MAY REQUIRE MODIFICATIONS BY THE OCMC-STREETS.
5. THE PERMITTEE IS NOT AUTHORIZED TO ENTER, OCCUPY OR USE ANY PUBLICLY-OWNED OR PRIVATELY OWNED, NON-PAVED, LANDSCAPE OR NON-LANDSCAPED LOCATION WITHOUT SPECIFIC WRITTEN PERMISSION. WHEN THE LOCATION IS WITHIN THE RIGHT-OF-WAY OF A LIMITED-ACCESS ARTERIAL HIGHWAY, WRITTEN APPROVAL FROM THE NYCDOT OCMC-HIGHWAYS IS REQUIRED. WHEN THE LOCATION IS WITHIN THE RIGHT-OF-WAY OF A PUBLIC STREET OR PUBLIC PARK, WRITTEN APPROVAL FROM THE NEW YORK CITY DEPARTMENT OF TRANSPORTATION OR NEW YORK CITY DEPARTMENT OF PARKS AND RECREATION IS REQUIRED. WHEN THE LOCATION IS WITHIN THE RIGHT-OF-WAY OF ANY OTHER JURISDICTION SUCH AS PRIVATE PROPERTY, STATE, FEDERAL ETC., IT IS THE PERMITTEE'S RESPONSIBILITY TO DETERMINE THE PROPERTY OWNER AND OBTAIN THE WRITTEN APPROVAL.
6. THE PERMITTEE SHALL ADHERE TO THE NYCDOT BUREAU OF BRIDGES' SPECIAL PROVISIONS FOR LANDSCAPE PROTECTION, MAINTENANCE AND RESTORATION, ITEMS 1.18.15 THROUGH 1.18.19, WHENEVER AND WHEREVER ANY OF THE PERMITTEE'S ACTIVITIES OCCUR WITHIN A LIMITED ACCESS ARTERIAL HIGHWAY RIGHT - OF - WAY.
7. NO DEVIATION OR DEPARTURE FROM THESE STIPULATIONS WILL BE PERMITTED WITHOUT THE PRIOR WRITTEN APPROVAL FROM THE OCMC-STREETS. REQUEST FOR SUCH MODIFICATIONS SHALL BE SUBMITTED TO THE OFFICE OF THE OCMC-STREETS, NEW YORK CITY DEPARTMENT OF TRANSPORTATION, A MINIMUM OF TWENTY (20) DAYS IN ADVANCE FOR CONSIDERATION.

C. GENERAL NOTES (CONTINUED)

8. FOR THIS PROJECT THE CONTRACTOR SHALL FURNISH, INSTALL AND MAINTAIN ALL NECESSARY ADVANCE WARNING AND DETOUR SIGNS, TEMPORARY CONTROL DEVICES, BARRICADES, LIGHTS AND FLASHING ARROW BOARDS IN ACCORDANCE WITH THE "MANUAL ON UNIFORM TRAFFIC CONTROL DEVICES," THE TYPICAL SCHEMES INCLUDED IN THIS SPECIFICATION; AND AS ORDERED BY THE ENGINEER-IN-CHARGE AND THE OCMC-STREETS.
9. THE CONTRACTOR SHALL BE RESPONSIBLE FOR IDENTIFYING HIS CONSTRUCTION SIGNAGE. THE IDENTIFICATION SHALL INCLUDE THE CONTRACTOR'S NAME, SPONSORING AGENCY NAME AND THE CONTRACT NUMBER. THE IDENTIFICATION SHALL BE PLACED ON THE BACK OF THE SIGN. THE LETTERING SHALL BE THREE (3) INCHES HIGH.
10. THE OCMC-STREETS RESERVES THE RIGHT TO VOID OR MODIFY THESE STIPULATIONS SHOULD CONSTRUCTION FAIL TO COMMENCE WITHIN TWO (2) YEARS OF THE SIGNED DATE OF THESE STIPULATIONS.
11. THE CONTRACTOR MUST COMPLY WITH ALL CONSTRUCTION EMBARGOS ISSUED BY THE NYCDOT INCLUDING THE HOLIDAY EMBARGO.

JOSEPH F. NOTO
EXECUTIVE DIRECTOR
OCMC-STREETS

DUANE C. BARRA
PROJECT MANAGER
OCMC-STREETS

(NO TEXT ON THIS PAGE)

Citywide Siting Criteria for Green Infrastructure - Required Clearance to Street Features

Features	ROWB/ROWGS	SGS	Infiltration Basin (Concrete)	Infiltration Basin (Grass)
Bus stops	• 100' back from posted bus stop sign • 20' ahead of posted sign • Do not install GI aprons in concrete bus pads	• 100' back from posted bus stop sign • 20' ahead of posted sign • Do not install GI aprons in concrete bus pads	Do not install GI aprons in concrete bus pads	Do not install GI aprons in concrete bus pads
Truck loading zones	Do not site	Do not site	OK	OK
MTA facilities	25'	25'	25'	25'
Schools	• 25' from center of main entrance (50 feet total clear space required in front of entrance) • Do not site in school bus loading areas	25' from center of main entrance (50 feet total clear space required in front of entrance)	N/A	N/A
Building lines	7'	7'	7'	7'
Projections into pedestrian clear path	Diagonal clearance at 45° of 7'	Diagonal clearance at 45° of 7'	N/A	N/A
Building vaults	7'	7'	7'	7'
Crosswalks (marked and unmarked)	5'	5'	5'	5'
Driveways/legal curb cuts	5'	5'	5'	5'
Doorways	• Do not site in front of door • Precast concrete walkway can be in front of door	Provide pedestrian path in front of door	N/A	N/A
Gates	• Do not site in front of gate • Provide 5' clearance from gate swing • For small residential gates in low-density neighborhoods, provide 3' clearance from gate swing	N/A	N/A	N/A
Street lights	5'	Check with street light unit if light in sidewalk behind SGS	3'	3'
Utility poles and guy wires	5'	Check with utility if utility pole/guy wire in sidewalk behind SGS	3'	3'
Tree pits	5'	• Tree pit can be on sidewalk behind SGS • If tree pit is not directly behind SGS, then provide 5' between tree pit and edge of SGS	N/A	N/A
CityBench	5' (may be relocated with DOT unit approval)	N/A	Do not site under street furnishings	Do not site under street furnishings
Muni-Meter	• Only bioswales set back several feet from the curb in Muni-Meter parking areas are permitted • 5' clearance required between meters and set-back bioswales • Meters may be relocated with DOT unit approval	N/A	• 4' clearance require between meters and infiltration Basins • Meters may be relocated with DOT unit approval	• 4' clearance require between meters and infiltration Basins • Meters may be relocated with DOT unit approval
Fire hydrant	3'6" from edge of hydrant or bollards	15'	3'-6"	3'-6"
Catch Basins	4' 6"	4' 6"	4' 6"	4' 6"

Features	ROWB/ROWGS	SGS	Infiltration Basin (Concrete)	Infiltration Basin (Grass)
Valves (Gas, Water, Oil Fill)	1' 6"	1' 6"	1' 6"	1' 6"
Coal Chute	N/A	N/A	N/A	N/A
FDNY SGS Rules	N/A	In no instance may a ROWSGS reduce an unobstructed roadway width to no less than 18'	N/A	N/A
Phone Booths	5'	5'	3'	3'
Manholes	5'	5'	5'	5'
Monitoring Wells	50'	50'	50'	50'
GI Spacing	• 5 ft. between hydraulically connected sites • 10 ft. between non-hydraulically connected sites	N/A	10 ft. between all Infiltration Basins	10 ft. between all Infiltration Basins
Existing Grass Strip	Match existing width of grass strip while ensuring that minimun required clear walking space is maintained	N/A	N/A	Match existing width of grass strip
Bike Racks	5'	N/A	2'	2'
DEP Water/Sewer Main	3'-6"	3'-6"	3'-6"	3'-6"
Existing Tree to Proposed Tree	N/A	N/A	N/A	N/A
Edge of GI to center of adjacent Existing Tree	minimum 10' and avoid driplines	N/A	minimum 10' and avoid driplines	minimum 10' and avoid driplines
Signs*	5'	5'	2'	2'
Corner of Street Intersection	N/A	N/A	N/A	N/A
Stop bars (at stop sign controlled intersections)	5' from the edge of stop bar closest to the intersection	5' from the edge of stop bar closest to the intersection	2' from the edge of stop bar closest to the intersection	2' from the edge of stop bar closest to the intersection
Newsracks and other miscellaneous street furnishings	5'	5'	2'	2'
Mailboxes (consult the local USPS post office for permission to move or disturb during construction)	5'	5'	2'	2'

*Signs: On walkthroughs, consultants may consider moving ONLY All double-arrow regulations, speed limit, and Bike Lane signage. Propose a new location based on guidance in the Green Infrastructure Siting Walkthroughs document.

DOT Siting Criteria For Citywide DEP Green Infrastructure Program - Size Limitations					
		Maximum Length			
Zoning	**Remaining Sidewalk Pedestrian Clearance After Proposed GI**	**ROWB/ROWGS** *(5' pedestrian path is required between consecutive ROWBs, 10' in commerical areas)*	**SGS** *(For SGS sizes larger than below, 5' pedestrian path is required every 20')*	**Infiltration Basin (Concrete)**	**Infiltration Basin (Grass)** *(Match existing grass strip width)*
Low density residential (R1 - R5)	**5'0" - 5'11" (and next to vertical element 3' or taller)**	**13'**	**25'**	**N/A**	**N/A**
	5'0" - 5'11" (not next to vertical element 3' or taller)	**20'**	**25'**	**N/A**	**N/A**
	6'0" or greater	**20'**	**30'**	**N/A**	**N/A**
• High density residential (R6-R10) • Manufacturing • Commerical (no frontage)	**5'0" - 5'11"**	**10'**	**25'**	**N/A**	**N/A**
	6'0" - 7'11"	**13'**	**25'**	**N/A**	**N/A**
	8'0" or greater	**20'**	**30'**	**N/A**	**N/A**
Commercial (with frontage) *Spacing between two ROWBS/ ROWGS should be at least 10'*	**6'0" - 7'11"**	**10'**	**25'**	**N/A**	**N/A**
	8'0" or greater	**13'**	**25'**	**N/A**	**N/A**

NYC Parks Siting Criteria for ROW Trees	
Feature	**Minimum Distance to Proposed Tree (Center of Trunk)**
Existing Tree	**20-30'** (trunk to trunk) depending on tree species and local conditions
Driveways, Legal Curb Cuts	7'
Street Lights, Utility Poles	25' but this may vary with tree species
Signs	**Traffic Signals** = 40' **Stop/Yield/Do Not Enter Signs** = 30' **Other Street Signs** = 6'
Electrical Transmission & Distribution Wires	For siting trees under these types of wires only, limit selection to approved underwire species.
Corner of Street Intersection	Distance may vary depending on street visibility, clearance, one way street status, and site conditions (minimum of 20').

NYC Parks Siting Criteria for GI Practice in proximity to Existing Trees
Existing Trees* GI shall be sited at least 10' from the center and outside of the minimum critical root zone (CRZ) of adjacent trees under NYC Parks jurisdiction. GI sited within the maximum CRZ shall require special care excavation and the oversight of a consulting arborist during all construction work. *The DBH of existing trees and the distance to the edge of the proposed GI must be noted in the Priority Walkthrough Spreadsheet.
***minimum CRZ** = 1 ft. radius per inch of diameter at breast height ***maximum CRZ** = 1.5 ft. radius per inch of diameter at breast height
Tree Transplant Requirements GI shall not be placed in sites that would require the transplant or removal of NYC Parks street trees. If Parks has mistakenly planted a street tree at a DEP GI designated site, Parks will review on a case by case basis to determine which of the following two solutions is appropriate. 1. A NYC Parks contractor will remove and transplant the tree into a tree pit at an alternate location off site. 2. The DEP contractor will transplant the tree into the ROWGI on site.

NEW YORK CITY
DEPARTMENT OF TRANSPORTATION

GREEN INFRASTRUCTURE DESIGN GUIDELINES

NEW YORK CITY DOT

FEBRUARY 28, 2018

DRAWING INDEX

SHEET	TITLE	PAGE
I-1	TITLE PAGE	1
I-2	DRAWING INDEX	2
G-1	GENERAL NOTES	3
G-2	AutoTURN NOTES (1 OF 2)	4
G-3	AutoTURN NOTES (2 OF 2)	5
R-1	ROWB DESIGN (1 OF 3)	6
R-2	ROWB DESIGN (2 OF 3)	7
R-3	ROWB DESIGN (3 OF 3)	8
SGS-1	SGS DESIGN	9
SGS-1A	FULL NECKDOWN	10
SGS-2A	PARTIAL NECKDOWN	11
SGS-3A	SGS NEAR INTERSECTIONS (APPROACHING)	12
SGS-3B	SGS NEAR INTERSECTIONS (PASSING)	13
SGS-4A	MID-BLOCK SGS	14
SGS-5A	SGS AT T-INTERSECTIONS	15
D-1	REFERENCE DOCUMENTS	16
D-2	NO STANDING ANYTIME SIGN	17
D-3	FDNY FIRE TRUCK SPECIFICATIONS	18

GENERAL NOTES

Document Purpose
While this document provides guidance on the design of green infrastructure (GI), including right-of-way bioswales (ROWBs) and stormwater greenstreets (SGSs), all final design determinations are at the discretion of New York City Department of Transportation (NYC DOT).

Auto-turn Requirements
Auto-turn is required to be shown on drawings and submitted in AutoCAD format for all proposed SGS sites at intersections, and mid-block SGS that have driveways located nearby. See G-3 for additional auto-turn requirements and standards.

Curbs
When constructing new curbs for ROWBs, consultant shall design to replace existing conditions. When designing new curbs for SGS installations, steel-faced curbs shall be used.

FDNY
For all streets that are currently 34' or wider and where proposed SGS will decrease the width of the roadway to less than 34', DEP shall coordinate review of the design proposal with FDNY.

Green Infrastructure Siting Guidelines
This document is intended to provide information in conjunction with the siting guidelines. All GI should adhere to the NYCDOT Siting Guidelines when determining potential locations for ROWBs and SGS.

Object Markers
Per MUTCD, object markers should be installed at an angle of 45 degrees to the curb toward to driver's sight line.

Pedestrian Facilities
In any location where SGS may be proposed (including medians or unusual geometric conditions), provide continuous paths for pedestrians. Pedestrian desire lines must be maintained when modifying curb lines.

Pedestrian ramps should be provided for access to all marked and unmarked crosswalks, including at SGS corner neckdowns, concrete triangles and medians. All pedestrian ramps shall show the required tactile warning strips.

All pedestrian ramps in proposed SGS locations shall be designed by the consultant engineer to meet ADA compliance. See DWG D-1 for information on design details.

Note that pedestrian ramps shown in this document are only diagrammatic graphical representations.

Plant Heights
All SGSs will be evaluated on a case by case basis in regard to plant height in the installation. Please see drawings R-3 and R-4 for detail on plant height limits. Note that in all locations the consultant shall consider the possibility for pedestrians/children to dart out from the sidewalk into the roadway (i.e. schools, playgrounds, parks, candy stores, etc.) and utilize the 2'-0" planting height where necessary.

Stormwater Greenstreet Neckdown Design Priority
The preferred SGS neckdown design is SGS-1A, a full concrete neckdown. When the location of the catch basin is at the apex and does not permit SGS-1A, the consultant shall use the design of SGS-2A, a partial concrete neckdown. If the location of the catch basin does not permit a full or partial concrete neckdown, the consultant shall design according to SGS-3A or SGS-3B, depending on the direction of traffic next to the SGS. When circumstances necessitate that the SGS is located mid-block, or the SGS is located so that there is at least 18' between the SGS and the intersection, the consulstant shall design according to SGS-4A.

Traffic Signs & Signals / Parking Regulations / Existing Street Furnishings
DOT Borough Engineering is to review all traffic issues in the right-of-way. Trees shall not block traffic-related signs and any relocation or adjustment to existing/new signs may only be made with the concurrence of the DOT Borough Engineer.

DOT Borough Engineer will review the contract furniture location spreadsheet, submitted as needed during 60% and 100% reviews, and determine which signs require DOT input for relocation. Signs that do not require review by borough engineers shall follow the relocation process found in the NYC DOT Green Infrastructure Street Furniture Relocation Review/Construction Procedure.

AutoTURN NOTES

Reference
Consultants may reference AASHTO Green Book, Chapter 2-Design Controls and Criteria.

Existing Conditions
All plans shall show all existing roadway markings accurately from curb to curb, including crosswalks, stop bars, center lines, travel lane lines, parking lane lines, bike lanes and markings, word messages (i.e. "STOP"), turning arrows, etc. Plans should also show traffic direction with hollow arrows.

Design Vehicles
The design vehicle shall be governed by the use of the roadway. The consultant shall provide specific AutoCAD layers for each type of vehicle used in analysis, utilizing a turning speed no less than 6 MPH.

For turns on standard streets: SU-30
For turns that are part of a MTA bus route: City-BUS Template
For turns on local truck routes: WB-40
For turns between two mapped through truck routes: WB-50, or WB-62 when appropriate.

In some cases (in industrial areas, around highway exists / entrances, etc.) the use of WB-62 may be necessary.

For simulating a fire truck, the consultant shall refer to DWG # D-3 for vehicle dimensions and turning radius information. A fire truck may be shown encroaching on the adjacent lane for turns. At the discretion of NYC DOT Highway Design, a fire truck may have more leeway on two-way and multi-lane streets with regard to encroachments.

Parking
Parking regulations shall be shown on drawings. For one-way streets regulations should be provided for both sides of the street.

Consultant shall show 8' parking guideline (both sides of the street for one-way) or existing parking lane lines. For 60 and 90 degree angled parking areas, consultant shall show all existing and required markings.

Assessment of Street Parking Impacts
The AutoTURN analysis submitted with the design shall clearly indicate impacts to street parking and include a written description with the number of parking spaces lost . The auto-turn drawings shall include the proposed curb line geometry and the dimension of the newly proposed "No standing anytime" (N.S.A) zone (which replaces former parking zone).

CONSULTANTS SHALL REFER TO NYC DOT AutoTURN TEMPLATE FILE - SEE EXAMPLE ON DWG #G-3

AutoTURN NOTES (CONTINUED)

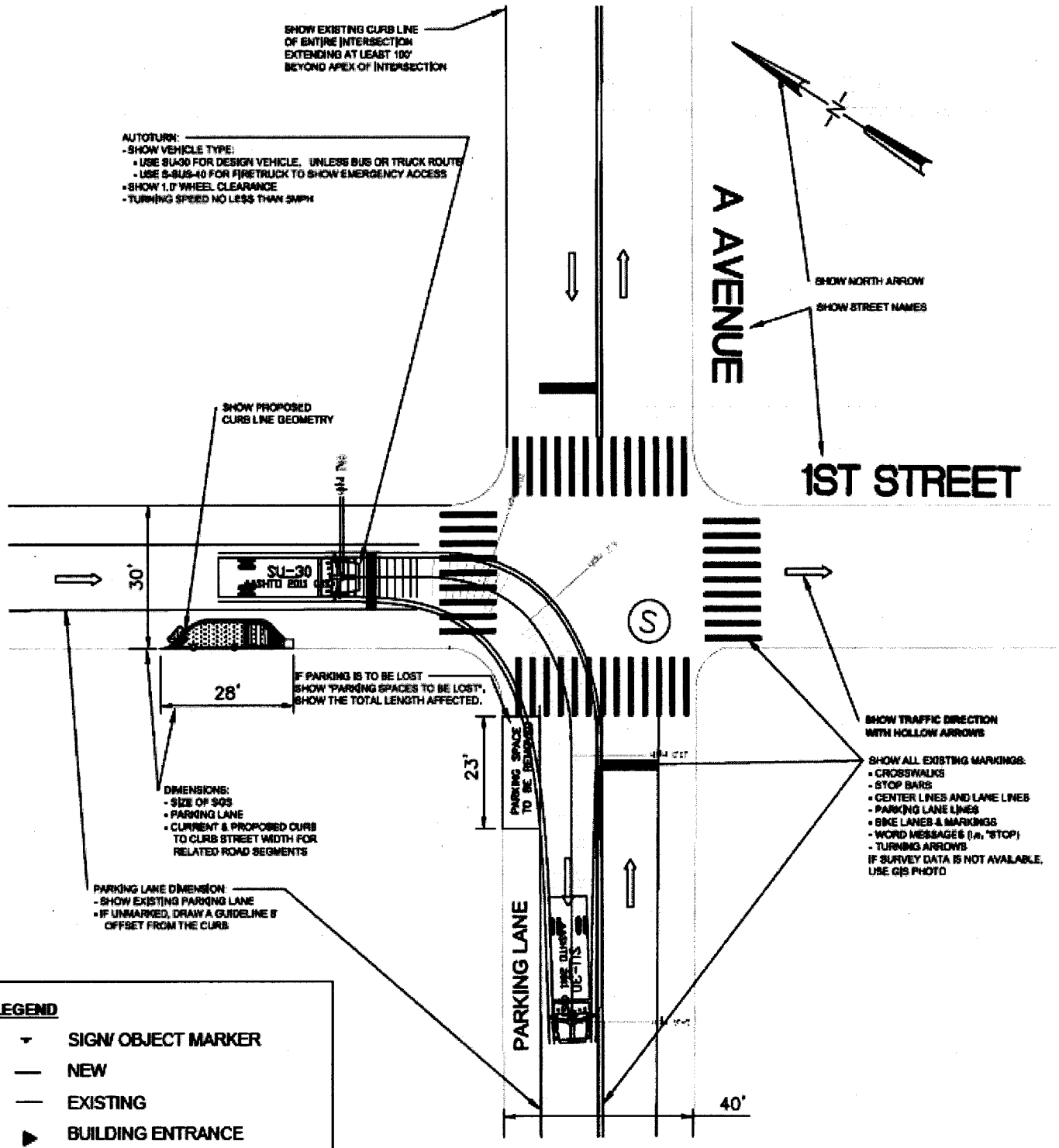

DWG #	DWG TITLE	SCALE	DATE	PAGE
G-3	AutoTURN NOTES (2 OF 2)	1"=30'	2/28/18	5 OF 18

NEW YORK CITY DOT

GREEN INFRASTRUCTURE DESIGN GUIDELINES

FENCES & OTHER PROJECTIONS INTO SIDEWALK

NOTES
When fences, cellar doors, or other obstructions project into the sidewalk, the consultant shall ensure that:

1) The clear path minimum, based on land use/context, is met and

2) The diagonal clearance is 7'

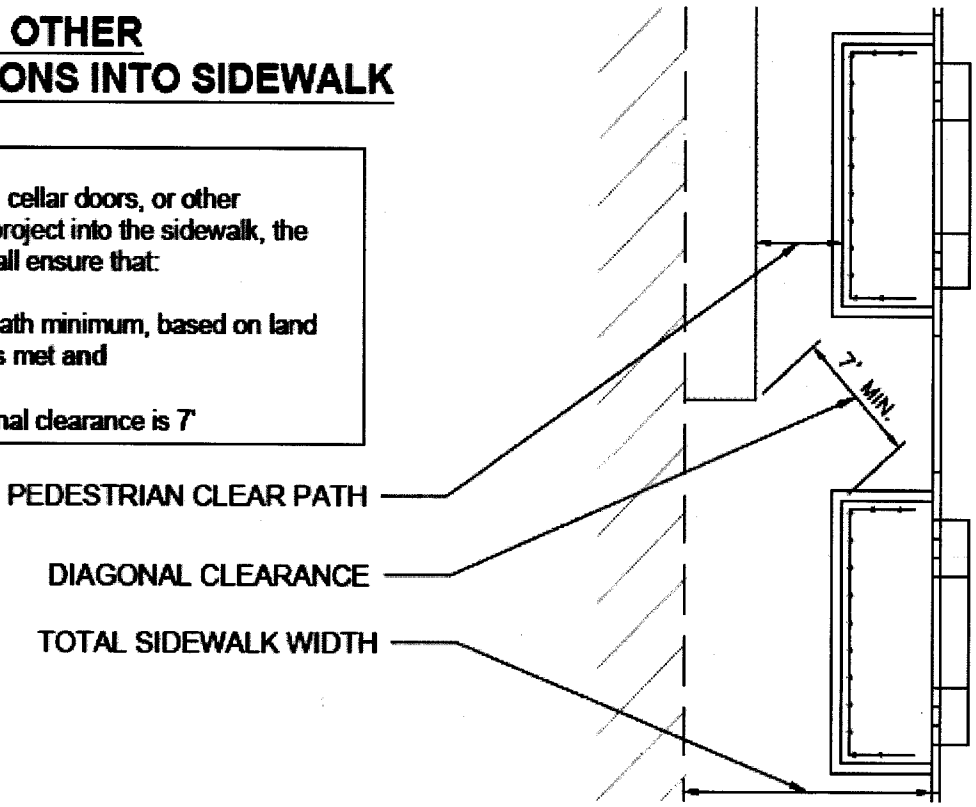

DOOR/GATE SWING

NOTES
DOOR/GATE SWING: Maintain 5' clear radius from the outside edge of any open door that swings open into sidewalk, in addition to all other clear path requirements.

DOOR WIDTH: **When door/gate is greater than 5' wide:** Entire width of door/gate must remain clear to street

When door/gate is less than 5' wide: Minimum 5' path must be provided. 5' path should include width of door/gate, and path may line up with either side of door, as shown in diagram.

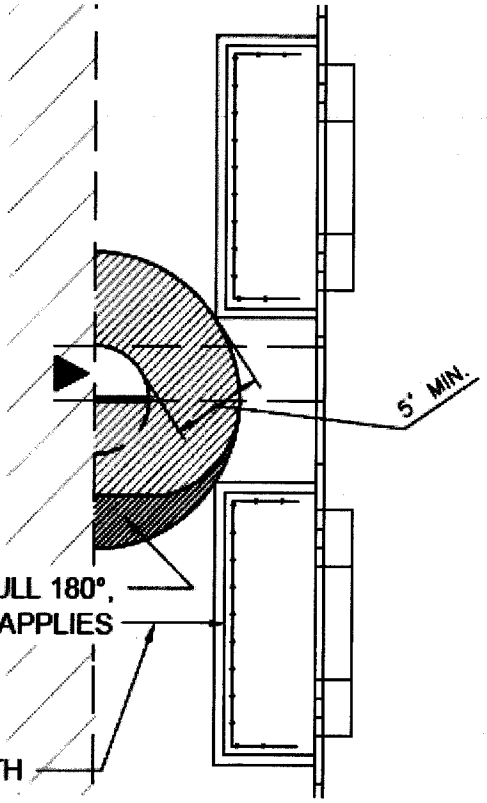

LEGEND
- SIGN/ OBJECT MARKER
- NEW
- EXISTING
- BUILDING ENTRANCE
- TRAFFIC FLOW

DWG #	DWG TITLE	SCALE	DATE	PAGE
R-1	ROWB DESIGN (1 OF 3)	1"=10'	2/28/18	6 OF 18

NEW YORK CITY DOT

GREEN INFRASTRUCTURE DESIGN GUIDELINES

CROSSWALKS (MARKED & UNNMARKED)

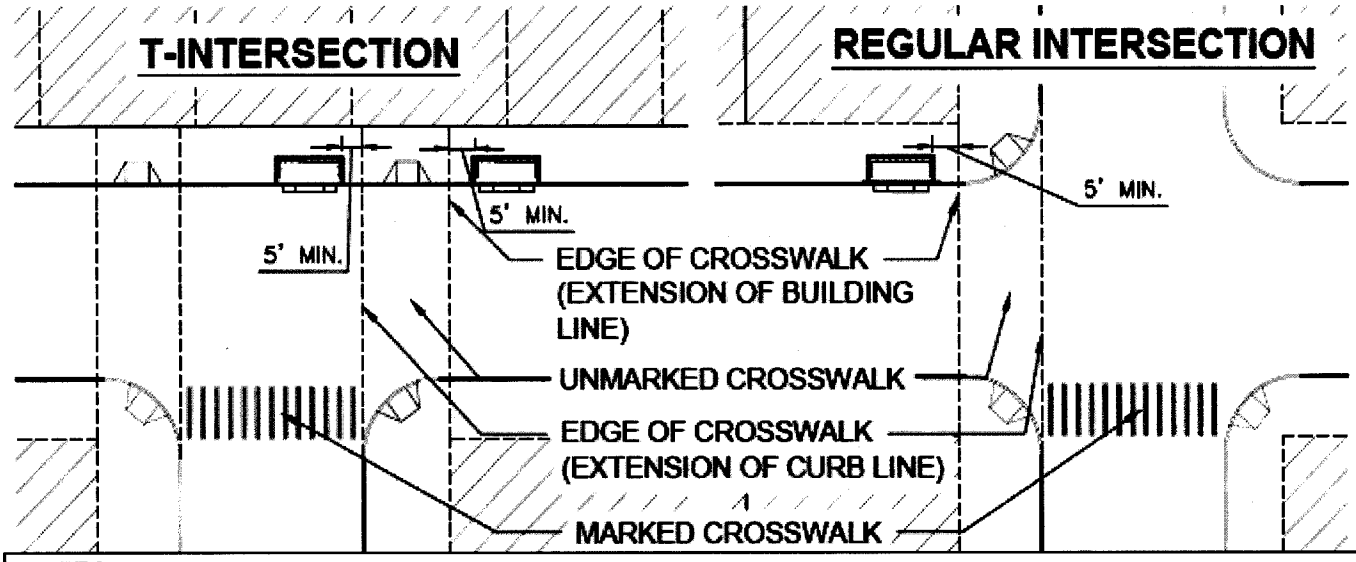

NOTES

ROWBs and SGSs shall always be a minimum 5' from an unmarked or marked crosswalk (regardless of pedestrian ramps). When striping that indicates the crosswalk is not present, the unmarked crosswalk is defined by the extension of the building line and the edge of the curbline.

This is important to note at the top of t-intersections, as shown in the diagram.

BUS STOPS

NOTES

ROWBs and SGSs may not be sited within 100' from the posted bus stop sign towards the back of the bus.

ROWBs and SGSs can, however, be preliminarily sited as close as 20' ahead of the posted bus stop sign at the discretion of DOT Bus Stop Management.

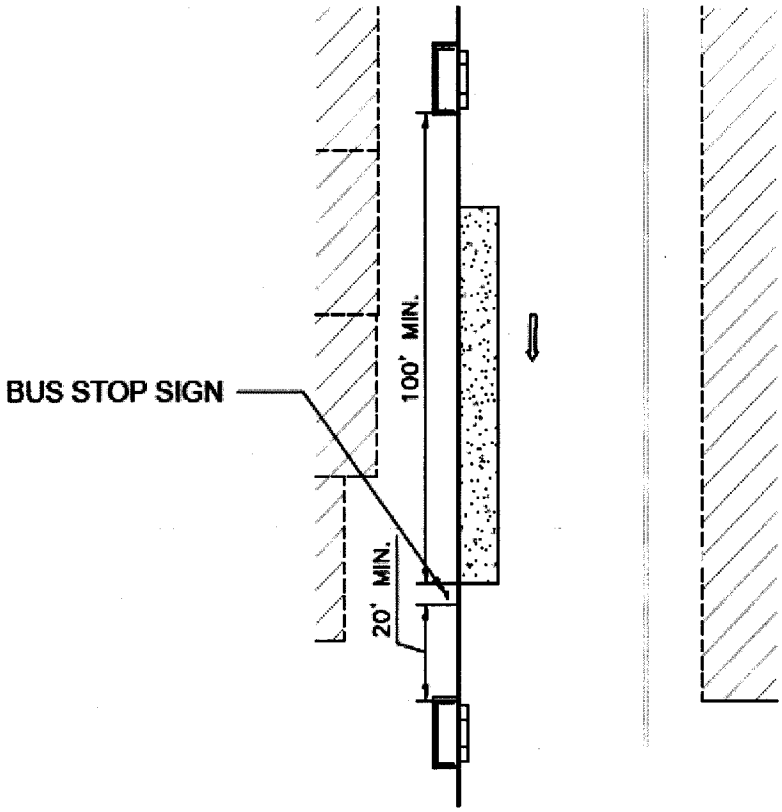

LEGEND

- SIGN/ OBJECT MARKER
- NEW
- EXISTING
- BUILDING ENTRANCE
- TRAFFIC FLOW

DWG #	DWG TITLE	SCALE	DATE	PAGE
R-2	ROWB DESIGN (2 OF 3)	1"=40'	2/28/18	7 OF 18

NEW YORK CITY DOT

GREEN INFRASTRUCTURE DESIGN GUIDELINES

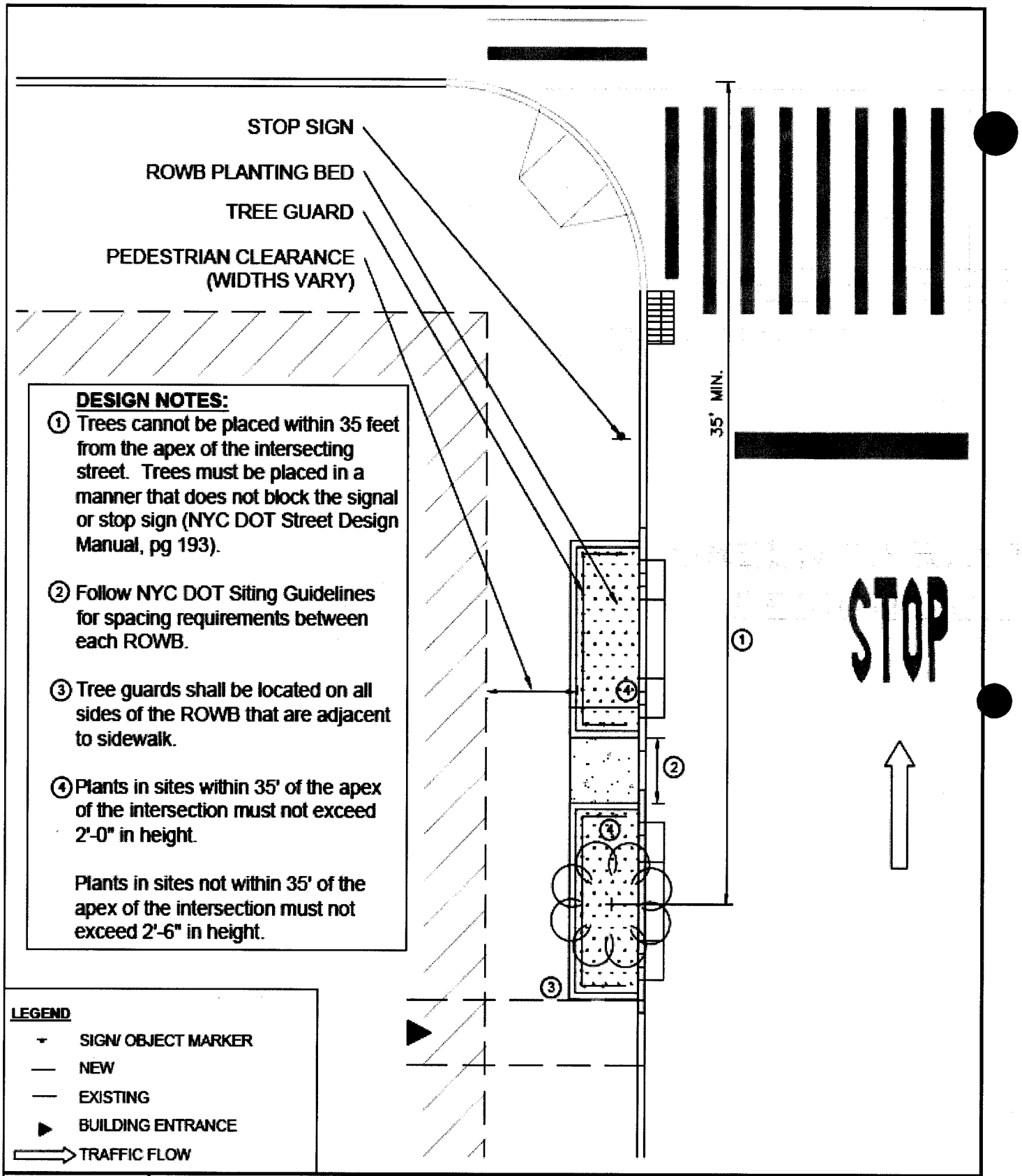

DESIGN NOTES:

① Trees cannot be placed within 35 feet from the apex of the intersecting street. Trees must be placed in a manner that does not block the signal or stop sign (NYC DOT Street Design Manual, pg 193).

② Follow NYC DOT Siting Guidelines for spacing requirements between each ROWB.

③ Tree guards shall be located on all sides of the ROWB that are adjacent to sidewalk.

④ Plants in sites within 35' of the apex of the intersection must not exceed 2'-0" in height.

Plants in sites not within 35' of the apex of the intersection must not exceed 2'-6" in height.

LEGEND

- SIGN/ OBJECT MARKER
- NEW
- EXISTING
- BUILDING ENTRANCE
- TRAFFIC FLOW

DWG #	DWG TITLE	SCALE	DATE	PAGE
R-3	ROWB DESIGN (3 OF 3)	1"=10'	2/28/18	8 OF 18

NEW YORK CITY DOT

GREEN INFRASTRUCTURE DESIGN GUIDELINES

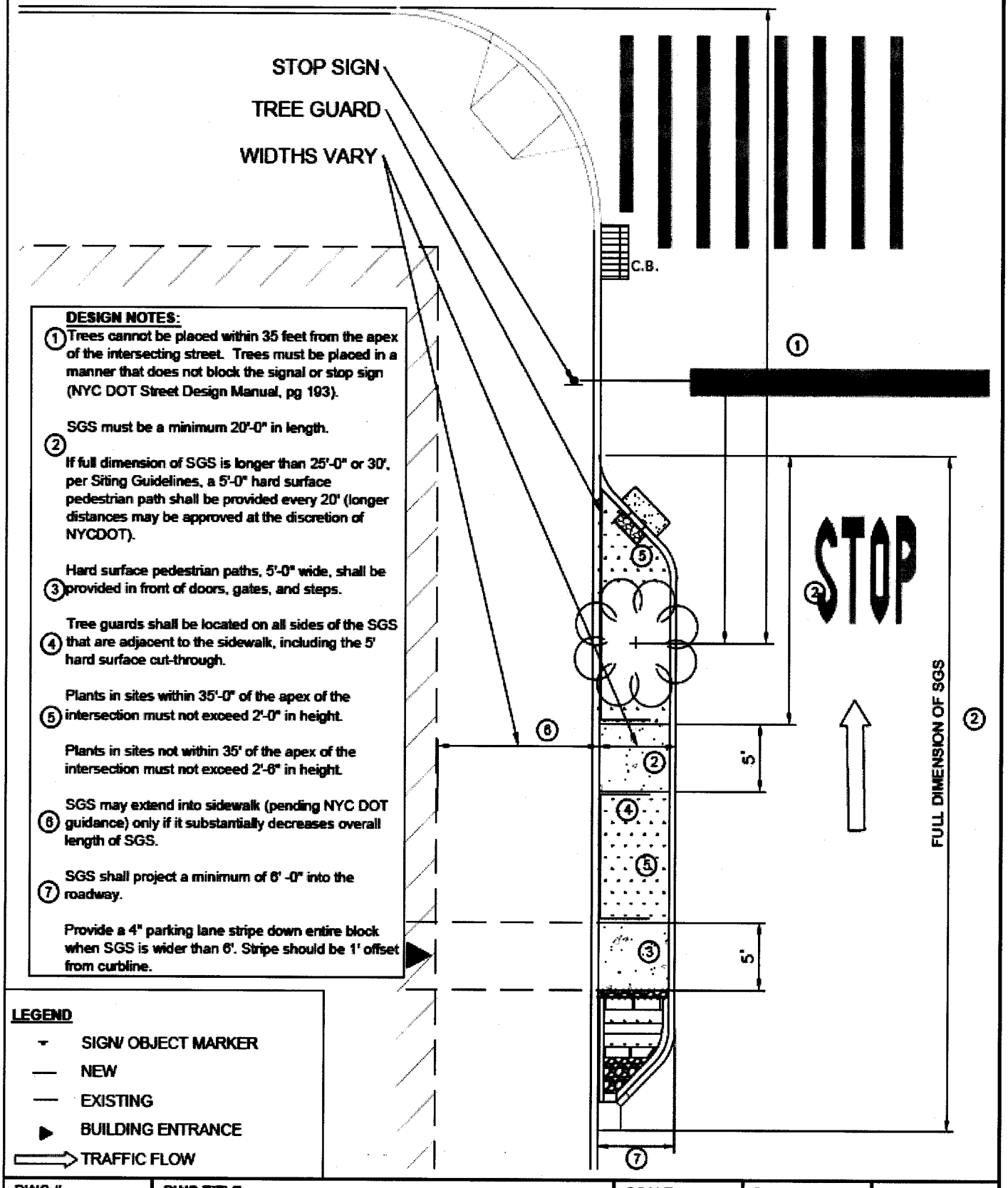

DESIGN NOTES:

1. Trees cannot be placed within 35 feet from the apex of the intersecting street. Trees must be placed in a manner that does not block the signal or stop sign (NYC DOT Street Design Manual, pg 193).
2. SGS must be a minimum 20'-0" in length.
   If full dimension of SGS is longer than 25'-0" or 30', per Siting Guidelines, a 5'-0" hard surface pedestrian path shall be provided every 20' (longer distances may be approved at the discretion of NYCDOT).
3. Hard surface pedestrian paths, 5'-0" wide, shall be provided in front of doors, gates, and steps.
4. Tree guards shall be located on all sides of the SGS that are adjacent to the sidewalk, including the 5' hard surface cut-through.
5. Plants in sites within 35'-0" of the apex of the intersection must not exceed 2'-0" in height.
   Plants in sites not within 35' of the apex of the intersection must not exceed 2'-6" in height.
6. SGS may extend into sidewalk (pending NYC DOT guidance) only if it substantially decreases overall length of SGS.
7. SGS shall project a minimum of 6' -0" into the roadway.

Provide a 4" parking lane stripe down entire block when SGS is wider than 6'. Stripe should be 1' offset from curbline.

LEGEND

- SIGN/ OBJECT MARKER
- NEW
- EXISTING
- BUILDING ENTRANCE
- TRAFFIC FLOW

DWG #	DWG TITLE	SCALE	DATE	PAGE
SGS-1	SGS DESIGN	1"=10'	2/28/18	9 OF 18

NEW YORK CITY DOT

GREEN INFRASTRUCTURE DESIGN GUIDELINES

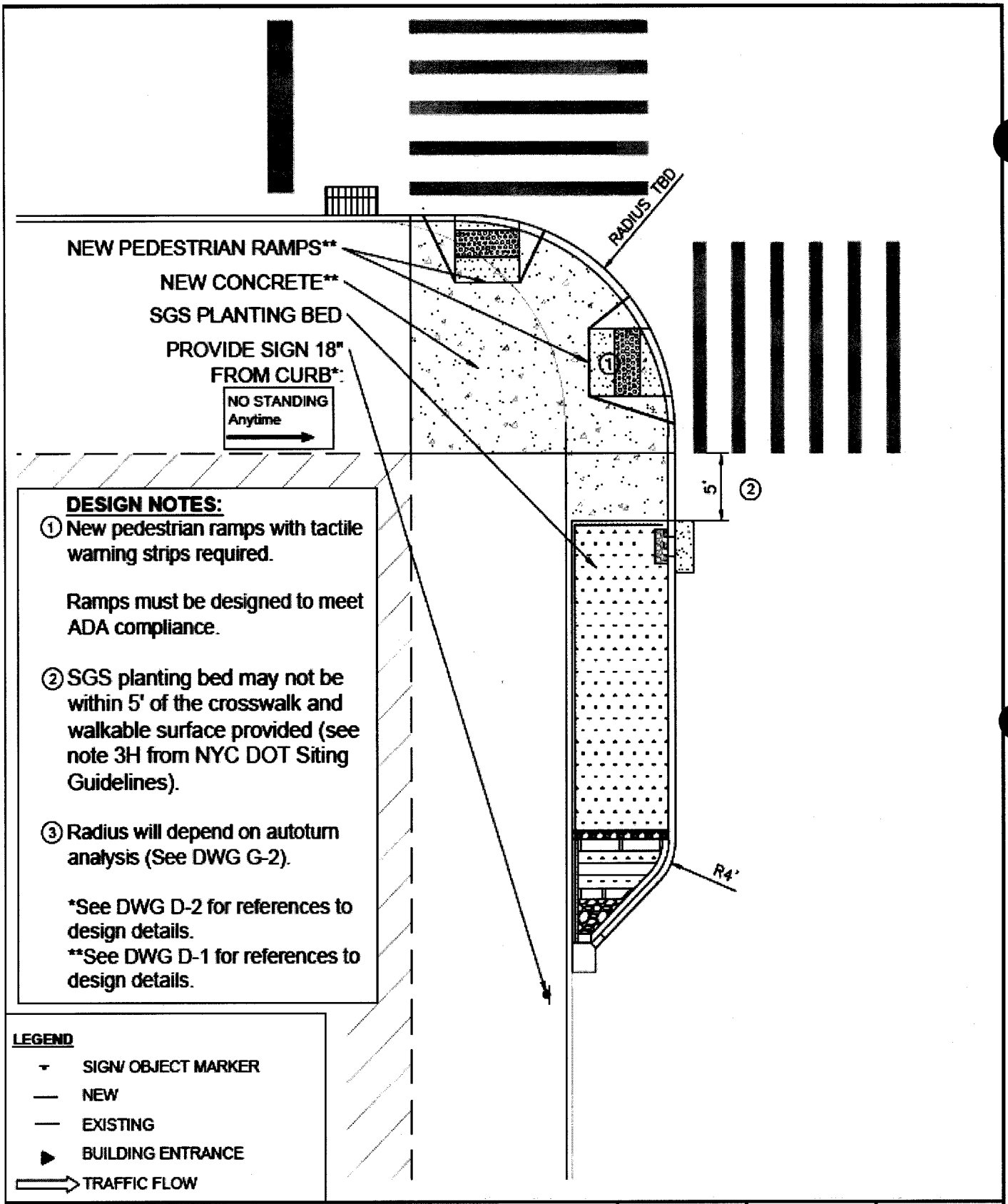

DESIGN NOTES:

① New pedestrian ramps with tactile warning strips required.

Ramps must be designed to meet ADA compliance.

② SGS planting bed may not be within 5' of the crosswalk and walkable surface provided (see note 3H from NYC DOT Siting Guidelines).

③ Radius will depend on autoturn analysis (See DWG G-2).

*See DWG D-2 for references to design details.
**See DWG D-1 for references to design details.

LEGEND

- SIGN/ OBJECT MARKER
- NEW
- EXISTING
- BUILDING ENTRANCE
- TRAFFIC FLOW

DWG #	DWG TITLE	SCALE	DATE	PAGE
SGS-1A	FULL NECKDOWN	1"=10'	2/28/18	10 OF 18

NEW YORK CITY DOT

GREEN INFRASTRUCTURE DESIGN GUIDELINES

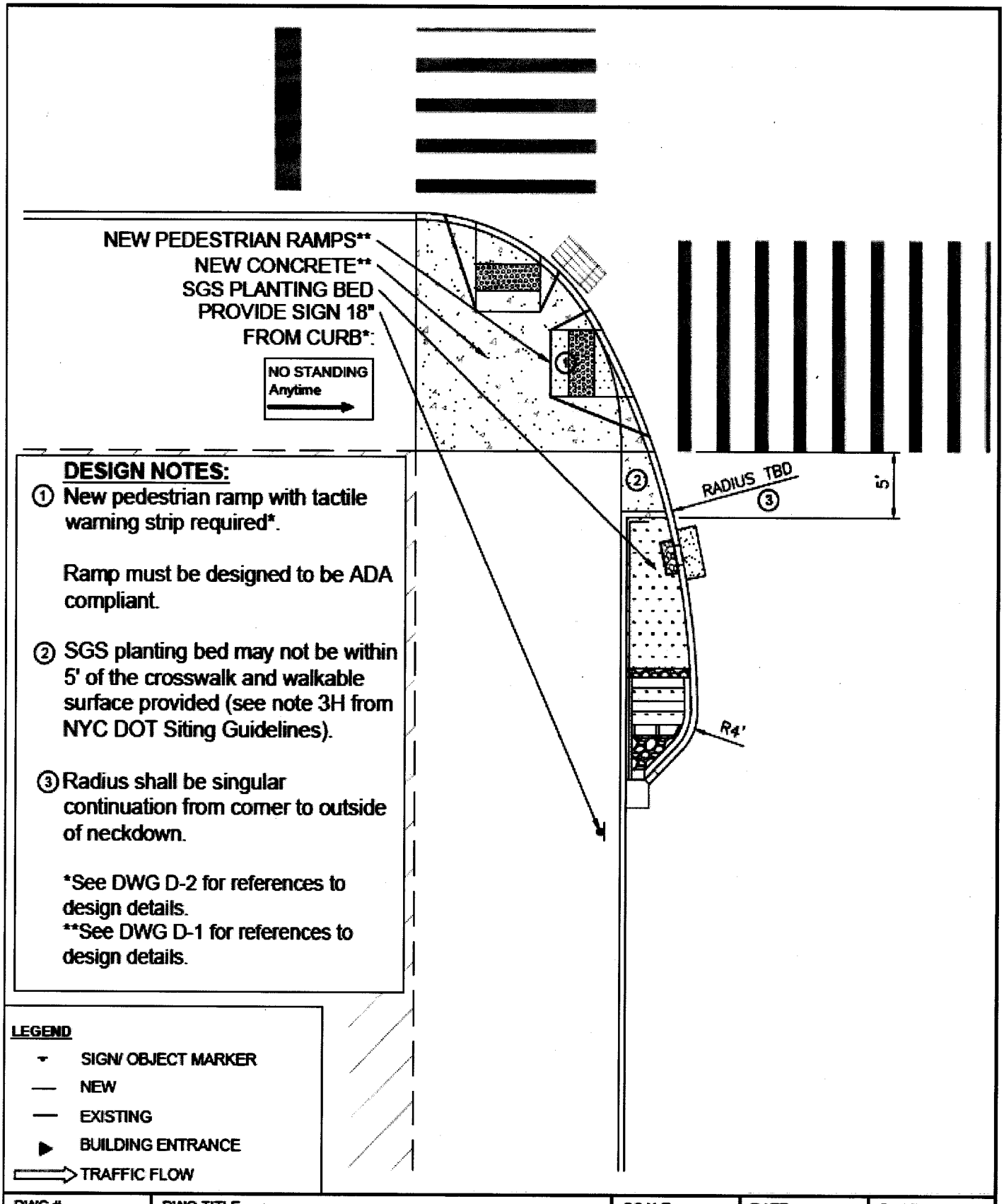

DESIGN NOTES:

① New pedestrian ramp with tactile warning strip required*.

Ramp must be designed to be ADA compliant.

② SGS planting bed may not be within 5' of the crosswalk and walkable surface provided (see note 3H from NYC DOT Siting Guidelines).

③ Radius shall be singular continuation from corner to outside of neckdown.

*See DWG D-2 for references to design details.
**See DWG D-1 for references to design details.

LEGEND

- SIGN/ OBJECT MARKER
- NEW
- EXISTING
- BUILDING ENTRANCE
- TRAFFIC FLOW

DWG #	DWG TITLE	SCALE	DATE	PAGE
SGS-2A	PARTIAL NECKDOWN	1"=10'	2/28/18	11 OF 18

NEW YORK CITY DOT

GREEN INFRASTRUCTURE DESIGN GUIDELINES

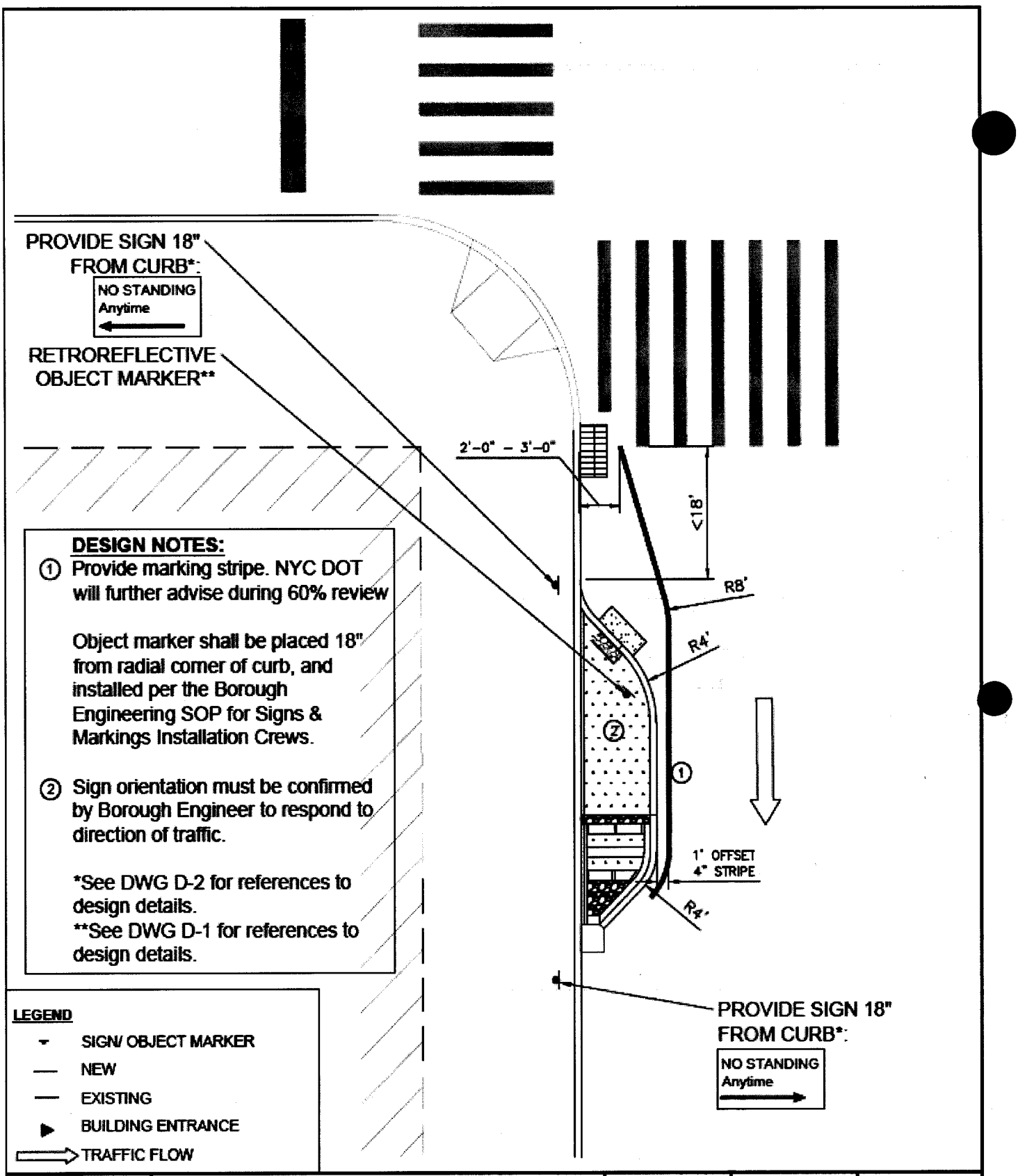

DESIGN NOTES:

① Provide marking stripe. NYC DOT will further advise during 60% review

Object marker shall be placed 18" from radial corner of curb, and installed per the Borough Engineering SOP for Signs & Markings Installation Crews.

② Sign orientation must be confirmed by Borough Engineer to respond to direction of traffic.

*See DWG D-2 for references to design details.
**See DWG D-1 for references to design details.

LEGEND

- SIGN/ OBJECT MARKER
- NEW
- EXISTING
- BUILDING ENTRANCE
- TRAFFIC FLOW

DWG #	DWG TITLE	SCALE	DATE	PAGE
SGS-3A	SGS NEAR INTERSECTIONS (APPROACHING)	1"=10'	2/28/18	12 OF 18

NEW YORK CITY DOT

GREEN INFRASTRUCTURE DESIGN GUIDELINES

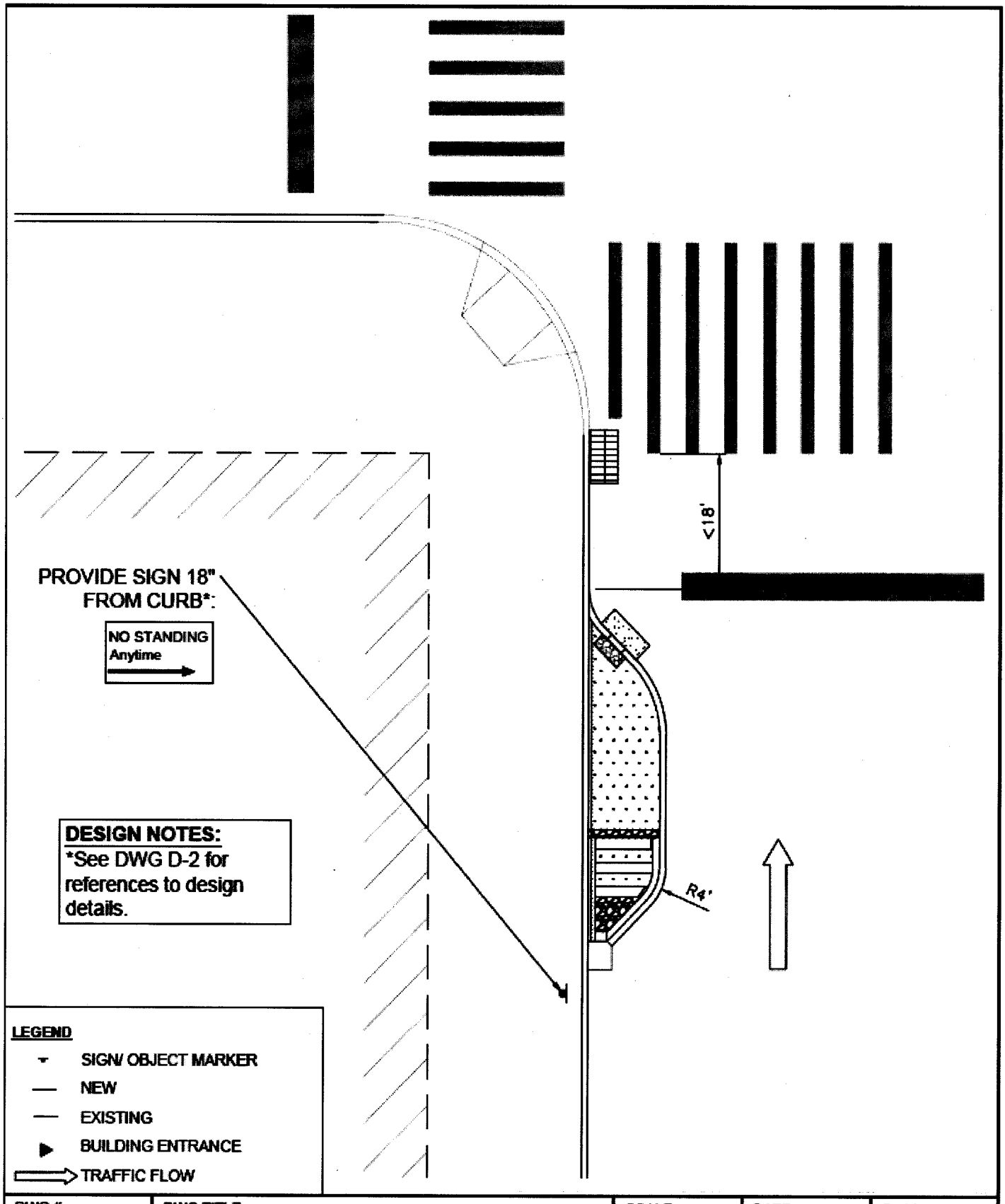

DWG #	DWG TITLE	SCALE	DATE	PAGE
SGS-3B	SGS NEAR INTERSECTIONS (PASSING)	1"=10'	2/28/18	13 OF 18

NEW YORK CITY DOT

GREEN INFRASTRUCTURE DESIGN GUIDELINES

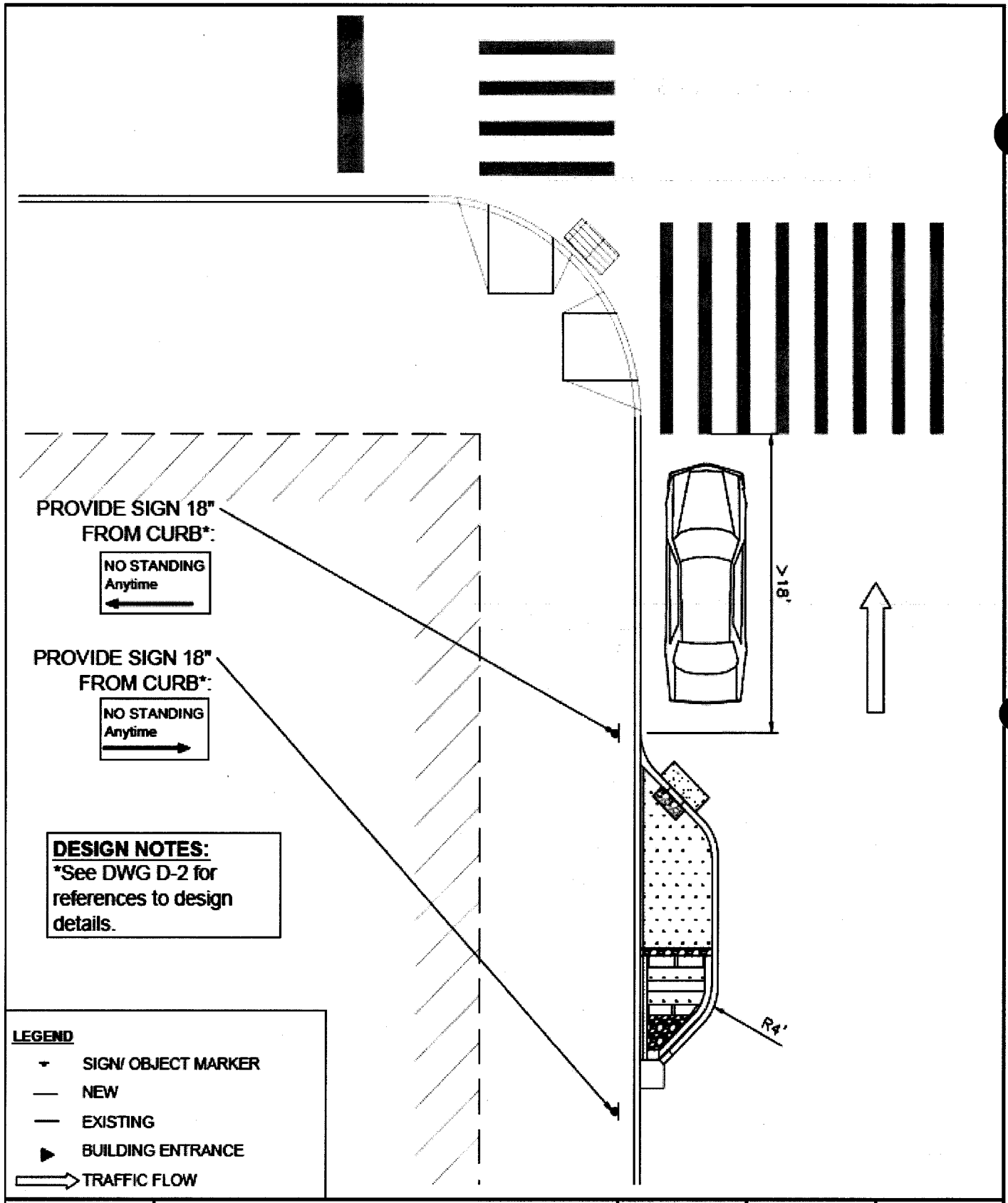

DWG #	DWG TITLE	SCALE	DATE	PAGE
SGS-4A	MIDBLOCK SGS	1"=10'	2/28/18	14 OF 18

NEW YORK CITY DOT

GREEN INFRASTRUCTURE DESIGN GUIDELINES

T-INTERSECTION DESIGN

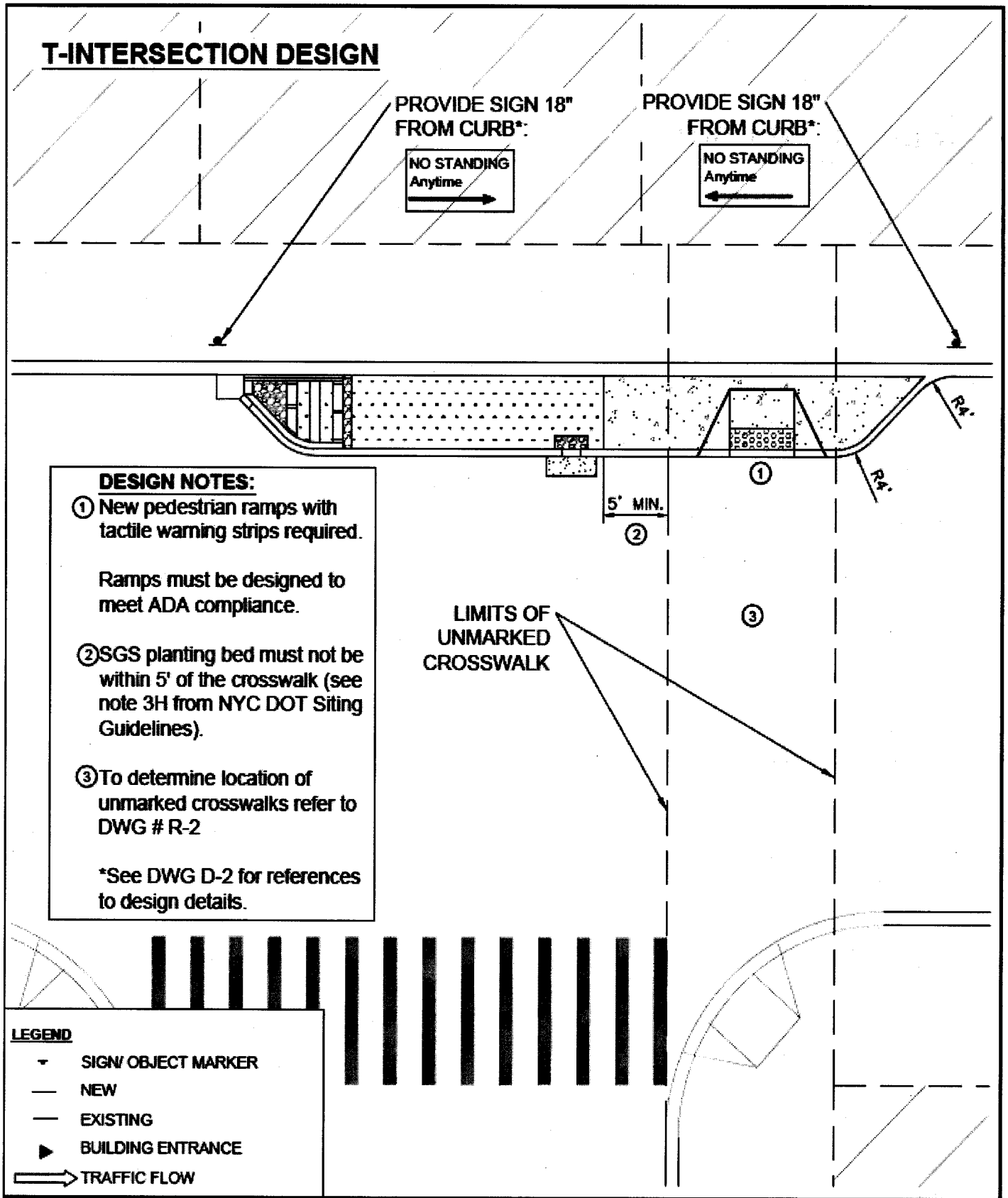

DESIGN NOTES:

① New pedestrian ramps with tactile warning strips required.

Ramps must be designed to meet ADA compliance.

②SGS planting bed must not be within 5' of the crosswalk (see note 3H from NYC DOT Siting Guidelines).

③To determine location of unmarked crosswalks refer to DWG # R-2

*See DWG D-2 for references to design details.

LEGEND

- SIGN/ OBJECT MARKER
- NEW
- EXISTING
- BUILDING ENTRANCE
- TRAFFIC FLOW

DWG #	DWG TITLE	SCALE	DATE	PAGE
SGS-5A	SGS AT T-INTERSECTIONS	1"=10'	2/28/18	15 OF 18

NEW YORK CITY DOT

GREEN INFRASTRUCTURE DESIGN GUIDELINES

REFERENCE DOCUMENTS

For further detail and standards please refer to the following documents:

Curbs (granite): NYCDOT Infrastructure Design Standards, Standard Details of Construction (July, 2010), pg H-1056

Curbs (historical granite): NYCDOT Infrastructure Design Standards, Standard Details of Construction (July, 2010), pg H-1056A

Curbs (concrete): NYCDOT Infrastructure Design Standards, Standard Details of Construction (July, 2010), pg H-1044

Curbs (steel-faced): NYCDOT Infrastructure Design Standards, Standard Details of Construction (July, 2010), pg H-1010

Pedestrian ramps: NYCDOT Infrastructure Design Standards, Standard Details of Construction (July, 2010), pg H-1011

Reflective object marker: see 2009 Manual on Uniform Traffic Control Devices (MUTCD) for more information on materials

Sidewalk (concrete): NYCDOT Infrastructure Design Standards, Standard Details of Construction (July, 2010), pg H-1045

Sign installation: Borough Engineer SOP for Signs & Markings Installation Crews

Sign - No Standing Anytime: See DWG AD-2 of this document

NEW YORK CITY DEPARTMENT OF TRANSPORTATION SIGN MANUFACTURING ORDER

CHIEF DIVISION OF DESIGN AND CONSTRUCTION
FROM: CHIEF DIVISION OF HIGHWAY DESIGN

DATE: 5/13/2014

DESIGNATION NO. **PS-1G** LOCATION: _____
(SUPERSEDES SP-1044B & SP-1044BA, SP-10B & SP-10BA, SP-216B & SP-216BA, SP-270B & SP-270BA)
(REVISED)

SIZE COLOR

BACKGROUND: **18" X 12" RED**
BORDER: - - - - -
MARGIN: 3/8" WHITE

SINGLE FACE: DOUBLE FACE: **Y**
REFLECTORIZED: **N**

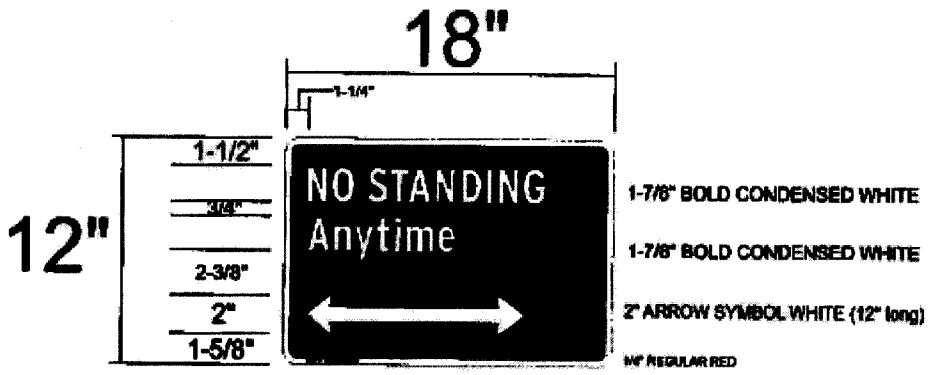



PS-1GA

FIRST USED FOR ORDER NO: _____ QUANTITY: _____
TYPE OF MOUNTING: _____
REQUESTED BY: D/C SCHALLER APPROVED: R. RUSSO
CHECKED BY: Ed Cavanagh DIRECTOR OF HIGHWAY SIGN DESIGN

DWG #	DWG TITLE	SCALE	DATE	PAGE
D-2	NO STANDING ANYTIME SIGN	–	6/19/15	17 OF 18

NEW YORK CITY DOT

GREEN INFRASTRUCTURE DESIGN GUIDELINES

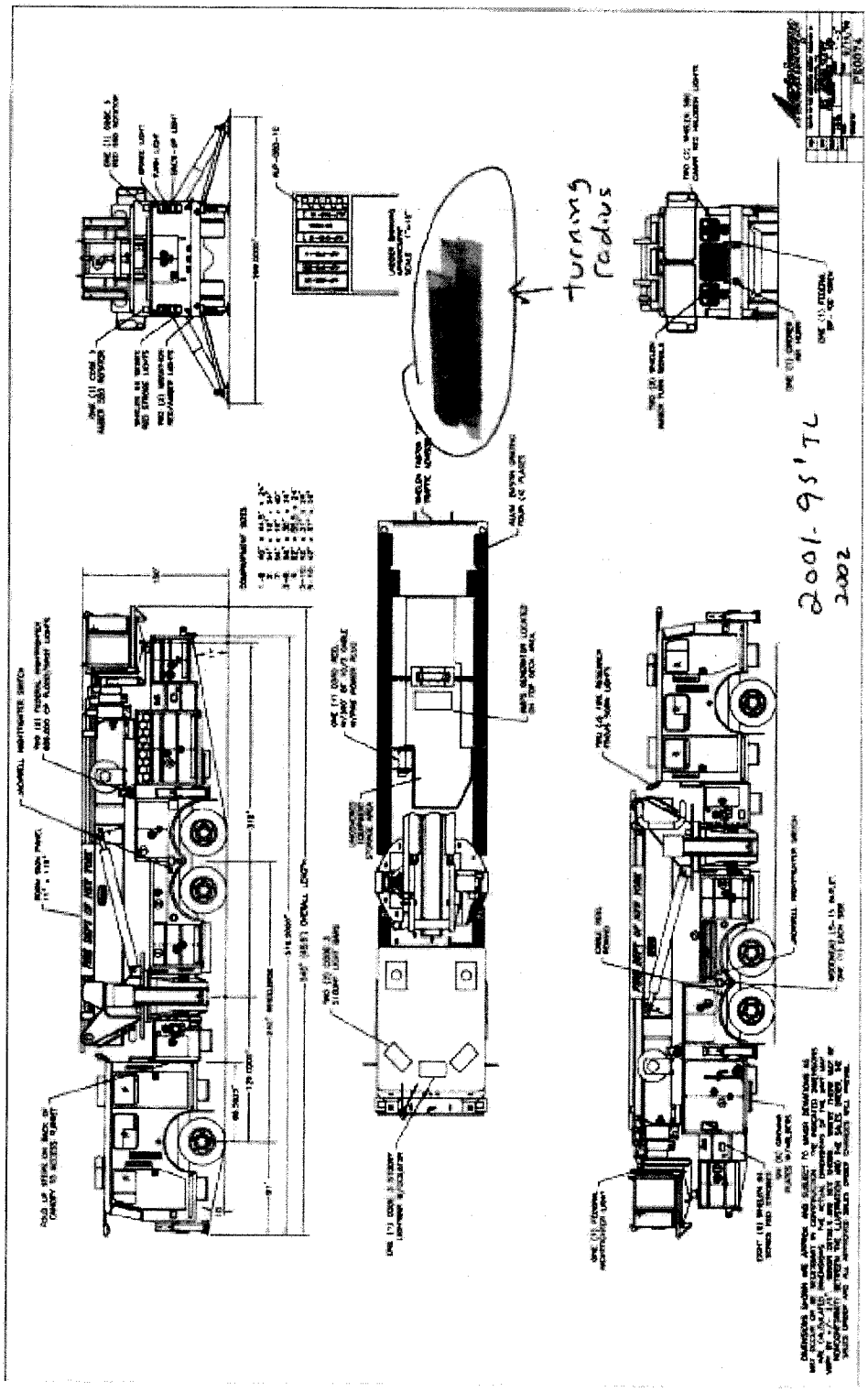

DWG #	DWG TITLE	SCALE	DATE	PAGE
D-3	FDNY FIRE TRUCK SPECIFICATIONS	–	7/7/15	18 OF 18

NEW YORK CITY DOT

GREEN INFRASTRUCTURE DESIGN GUIDELINES

THE CITY OF NEW YORK DEPARTMENT OF SANITATION

Interpretive Memorandum # 2

The Contractor is notified that the following Department of Sanitation (DOS) Interpretive Memorandum # 2 does not guarantee that a temporary stockpile location will be approved for this project. In addition, the Department of Design and Construction (DDC) reserves the right to rescind approval for any temporary stockpile location at any time. No payment will be made to the Contractor if either a temporary stockpile location is not approved for this project, or DDC rescinds an approval for any reason.

THE CITY OF NEW YORK Department of Sanitation

S. ELIZABETH SEARLE
Assistant Commissioner
for Legal Affairs

Bureau of Legal Affairs
44 Beaver Street
New York, NY 10004
Telephone (212) 837-8110
FAX (212) 837-8243

Department of Sanitation Rules and Regulations Governing Non-Putrescible Solid Waste Transfer Stations

INTERPRETIVE MEMORANDUM # 2
February 14, 1995

Subject: Temporary Storage and Processing of Construction and Demolition Debris by New York City Agency Contractors

Contractors performing construction work for New York City agencies may be required to excavate dirt, concrete, rock, gravel and similar materials ("construction materials") from a contract site or to remove from a contract site construction materials resulting from construction, demolition, alteration, repair or renovation of structures, streets or buildings. On street construction projects, construction materials required to be excavated or removed may also include asphalt. The purpose of this Interpretive Memorandum is to (a) define the circumstances under which the Department of Sanitation (the "Department") will not deem its Rules and Regulations Governing Non-Putrescible Solid Waste Transfer Stations (the "Rules") to apply to the temporary storage, processing and/or stockpiling (collectively, "stockpiling") of such construction materials and (b) the procedure for ensuring such exemption. It is the responsibility of the contracting agency to oversee its contractors' compliance with the Rules and with this Interpretive Memorandum.

1. When No Transfer Station Permit is Required

Where a City contractor has:

(a) set aside an area of a contract site for stockpiling construction materials excavated from and/or intended for that site; or

(b) received written approval from the contracting agency for an off-site stockpiling location,

the Department will not deem such stockpiling location a transfer station and will not require the contractor to obtain a transfer station permit so long as:

(c) no construction materials or debris from off the contract site are received at the designated location for subsequent transfer to another location (other than the contract site); and

(d) the temporary stockpiling location is clearly described as such in the contract or clearly approved by the construction agency and designated as such in writing to the Department by the agency; and

(e) the construction agency represents in writing to the Department that such agency will monitor the temporary stockpiling location and ensure its clean-up and restoration pursuant to the procedures set out in this memorandum.



Help Reduce
New York's Waste.

printed on recycled paper

Example: Street Construction Projects

As part of a contract for street construction, the contractor may be working at one end of a street and using an area at the other end of the street for the temporary stockpiling of construction materials. Both ends of the street are part of the construction contract site. In addition, the contractor may have leased an off-site location for temporary stockpiling of materials, which, following processing, will be reincorporated into the contract site, with some portion of the remainder designated for delivery to a Department disposal facility. Neither location will be regulated by the Department as a transfer station so long as the procedures set out in this memorandum are followed.

2. Procedure for Exception.

Upon a City construction agency's approval of any location to be designated as a temporary processing, storage or stockpiling area, that agency must determine that (a) its contract with the contractor provides for clean-up and restoration of such area by, for example, the contractor's posting of a restoration bond and/or by contractual set-off and (b) the agency has adequate procedures for monitoring the designated area to ensure that it does not violate the provisions set forth in this memorandum and that such location is cleaned up and restored at the completion of the contract work.

The City construction agency must submit an official letter to the Department acknowledging compliance with both (a) and (b) immediately above and representing that the agency will ensure the contractor's compliance. The letter to be submitted must be in substantially the following form, addressed to the Director, Bureau of Waste Disposal, Department of Sanitation, 125 Worth Street, Room 726, New York, NY 10013:

"The New York City Department of _____ (the "Agency") has awarded a construction contract to _____(Contractor)_____ _____ (the "Contractor") for work to be performed at _____(Contract Site)_____.

a. This Agency has approved the following locations to be used by the Contractor for the temporary storage, processing and/or stockpiling of construction materials (the "Stockpiling Locations") excavated from the construction site or intended for the construction site:

_____

_____

_____

_____

b. The terms of the contract require the Contractor to clean up and restore the Stockpiling Locations, whether on or off the contract site, at or before the completion of the contract work.

c. This Agency assumes responsibility for the monitoring of Stockpiling Locations to ensure that only materials received from and/or intended for the construction site are stockpiled at such locations and we will enforce clean-up and restoration of such Locations at the end of their use for temporary stockpiling or at the termination of the contract, whichever occurs earlier, through restoration

bonding requirements and/or contractual set-off provisions such that the costs of clean-up and restoration will not become a charge to the Department or the City. "

3. When a Transfer Station Permit is Required

A transfer station permit will be required under any circumstances other than those outlined above. Except in the specifically defined circumstances set forth in this memorandum, any operator of a location or facility which receives, processes, stores or stockpiles construction and demolition debris or fill material for purposes of transfer to another location, including to a New York City Department of Sanitation facility, and whether or not under contract to the Department for the delivery of such materials, will be fully subject to the Department's transfer station rules and liable for enforcement for violations.

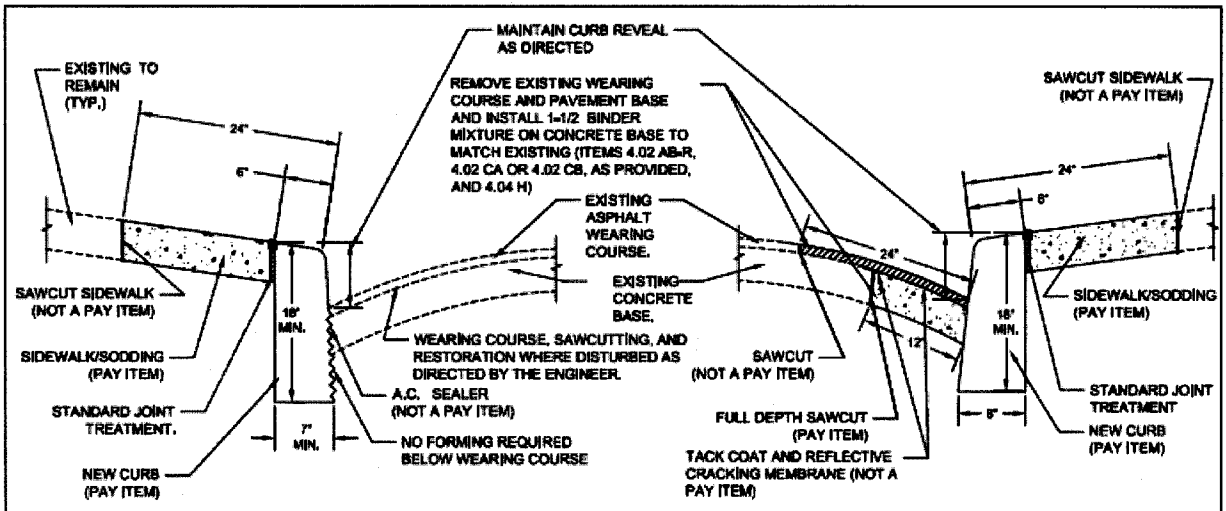

CURB INSTALLATION DETAIL

CASE I
(20' MAX. LENGTH)

WHERE THERE ARE NO SIDEWALK AND PAVEMENT PAY ITEMS INCLUDED IN THE CONTRACT, THE COSTS FOR RESTORATION OF THE DISTURBED SIDEWALK AND PAVEMENT ARE INCLUDED IN THE UNIT PRICE FOR THE NEW CURB.

CASE II

WHERE SIDEWALK AND PAVEMENT PAY ITEMS ARE INCLUDED IN THE CONTRACT, THE COSTS FOR RESTORATION OF DISTURBED SIDEWALK AND PAVEMENT AS WELL AS CURB INSTALLATION ARE PAID UNDER THE APPROPRIATE ITEMS INCLUDED IN THE CONTRACT.

NOTE:

A. ROADWAY AREA RESTORATION:

1. Full depth sawcutting, removal, disposal of existing wearing course, and restoration as indicated shall be paid under the appropriate scheduled items. no separate payment will be made for the partial depth sawcutting of wearing course, cost included under other items.
2. At dirt shoulders, the curb trench shall be backfilled, compacted and topped with 4" binder mixture whre directed, the cost of which shall be paid under Binder Mixture or Asphaltic Concrete Mixture, as provided.
3. At Belgian Block pavement covered with asphaltic location, one course of the blocks may be removed and restored with Binder Mixture. At Belgian Block surface pavement locations, the blocks shall be reset, unless otherwise directed by the Engineer. The cost of this work is included in the price bid for the curb item.

B. SIDEWALK AREA RESTORATION:

1. The sawcutting, removal, disposal of existing sidewalk and restoration with new sidewalk shall be paid for under the appropriate sidewalk item, as per specifications.
2. At grass sidewalk areas, the curb shall be backfilled, compacted as necessary, and topped with 6" of topsoil and sodded, the cost of which is included in the price bid for the sodding item.

N.Y.C. Dept. of Transportation

CURB INSTALLATION DETAIL

09/21/2016

(NO TEXT ON THIS PAGE)

EP7 - PAGES

GAS COST SHARING (EP-7) STANDARD SPECIFICATIONS

NOTICE

THE PAGES CONTAINED IN THIS SECTION (EP7-PAGES) REPRESENT THE GAS COST SHARING WORK THAT SHALL APPLY TO AND BECOME A PART OF THE CONTRACT.

(NO TEXT ON THIS PAGE)

TABLE OF CONTENT

I - NOTICE TO ALL BIDDERS; GAS COST SHARING WORK

II - GENERAL PROVISIONS; GAS COST SHARING WORK

1. General
2. Gas Interferences And Accommodations
   2a. Water Main Accommodations
   2b. Sewer Accommodations
3. Quantity Overruns, EP-7 Funded Bid Items
4. Changes And Extra Work
5. Excavation
6. Backfilling And Street Restoration
7. Non-Responsive Bids
8. Minimum Clearances
9. Work By Facility Operator
10. Materials Furnished By Facility Operator
11. Liability And Insurance
12. Width And Depth Of Excavation
13. Depth And Crossing Angles Of Gas Facilities
14. Maintenance Of Traffic For Gas Work
15. Relocated Gas And Temporary Systems Installation
16. Role Of Company Inspector
17. Coordination With Gas Company

III - TECHNICAL SECTION

SECTION 6.01 - Trench Crossings; Support And Protection Of Gas Facilities And Services.
SECTION 6.02 - Extra Excavation For The Installation Of Catch Basin Sewer Drain Pipes With Gas Interferences.
SECTION 6.02.1 - Extra Excavation For The Installation Of Catch Basin Sewer Drain Pipes With Upstream Inverts Greater Than Six (6) Feet.
SECTION 6.03 - Removal Of Abandoned Gas Facilities. All Sizes.
SECTION 6.03.1 - Removal Of Abandoned Gas Facilities With Possible Coal Tar Wrap. All Sizes. (For National Grid Work Only)
SECTION 6.03.1a - Removal Of Abandoned Gas Facilities With Possible Coal Tar Wrap. All Sizes. (For Con Edison Work Only)
SECTION 6.04 - Adjust Hardware To Grade Using Spacer Rings/Adaptors. (Street Repaving.)
SECTION 6.05 - Adjust Hardware To Grade By Resetting. (Road Reconstruction.)
SECTION 6.06 - Special Care Excavation And Backfilling.
SECTION 6.07 - Test Pits For Gas Facilities.
SECTION 6.08 - "NO TEXT"

SECTION 6.09 - Trench Excavation and Backfill for New Gas Mains and Services (For National Grid Work Only)
SECTION 6.09a - Trench Excavation and Backfill for New Gas Mains and Services (For Con Edison Work Only)

IV - STANDARD SKETCHES; GAS COST SHARING WORK

NO. 1 - Support Requirements For Gas Mains And Services Crossing Excavation Greater Than 4'-0" Wide At Any Angle
NO. 1A - Support Requirements For Gas Mains Over 16" Diameter Up To And Including 48" Diameter Crossing Excavation At Any Angle
NO. 2 - Typical Methods Of Measurement For Gas Crossings
NO. 3 - Utility Crossings During Catch Basin Chute Connection Pipe Installation
NO. 4 - Utility Crossings During Catch Basin Chute Connection Pipe Installation (Extra Depth)
NO. 5 - Gas Main Encroachment On And/Or Parallel To Excavation Of Unsheeted Trench

V - PRELIMINARY GAS WORK TO BE PERFORMED BY FACILITY OPERATOR

VI - LISTING OF APPROXIMATE LOCATIONS OF EP-7 BID ITEMS QUANTITIES

I - NOTICE TO ALL BIDDERS; GAS COST SHARING WORK

All prospective bidders are hereby advised that, pursuant to the "Gas Facility Cost Allocation Act", ("the Act"), the City of New York has entered into an agreement ("the Agreement") with the gas companies (Con Edison or National Grid (formerly KeySpan Energy Delivery)) operating in their respective areas of the City to "share" the cost of facility relocation and/or support and protection of facilities disturbed by proposed water and/or sewer and related City work specified in this contract. Therefore, bid items, specifications and estimated quantities for the incremental costs of support and protection of certain gas facilities have been included in this contract. The low bid for this contract shall be determined by examining each bid for all work to be performed under this contract including any work of support and protection of gas facilities to be performed. The Contractor shall not seek additional compensation from gas companies except as specifically set forth in its contract.

II - GENERAL PROVISIONS; GAS COST SHARING WORK

1. General:

The Contractor shall perform City work with interferences from existing live and abandoned gas facilities. This shall be defined as utility work. Therefore, this contract includes bid items, specifications and estimated quantities designed to fully compensate him/her for the incremental costs of supporting, protecting, providing accommodations and, avoiding disturbing gas facilities located in the streets shown on the contract drawings. In the event that any other provisions of this contract related to gas facilities (or private utilities) conflict with these provisions, these provisions shall supersede and govern all work related to gas facilities owned by the companies operating in the project area. All utility work, as defined in these specifications, including changes and additions thereto shall be paid solely by the City except when specified otherwise in this contract. Contractor hereby agrees that the facility operator shall not be liable to pay him/her for any work performed including extra utility work. Contractor agrees that its bid prices include all compensation for loss of productivity and efficiency, idle time, delays (including any delays occasioned by negotiation of a contract change), change in operations, mobilization, demobilization, remobilization, added cost or expense, lost of profit, other damages or impact costs that may be suffered by or because of utility work, or the presence of gas facilities in the proximity of City work and that it will not seek additional compensation for these items. All disputes shall be resolved as specified in the contract.

Pursuant to the Act, Agreement, and the New York City Administrative Code, the gas company(ies) has been directed by the Commissioner and is required to perform all maintenance, repairs, replacement, shifting, alteration, relocation, and/or removal work that are not part of this contract. By having bid on this contract, the Contractor understands and agrees that the Commissioner has preasserted any right the City has to require, including the issuance of any directives or so called "order outs" under the New York City Administrative Code, any or all gas companies to maintain, repair, replace, protect, support, shift, alter, relocate, and/or remove all gas facilities that are about to be disturbed by the City contract work. The issuance of additional such directives during the performance of the contract work, where necessary in the sole judgment of the Commissioner, shall be initiated by such Commissioner as set forth in the relevant sections of the Act and Agreement. Contractor further agrees to insert such requirements as set forth herein above into any contracts with its approved subcontractors so that its subcontractors also understand and agree to such contract requirements.

2. Gas Interferences And Accommodations:

During the performance of sewer and water main work funded by the New York City Department of Environmental Protection (NYCDEP), as instructed by the Engineer, the use of any applicable contract bid item is allowed in order to resolve and accommodate all gas facilities interferences with such City work, including the removal of contaminated soil in associated trench excavation. This is in addition to the specified EP-7 bid items in the contract. Payment for such accommodation shall be funded by EP-7 bid item "UTL-GCS-2WS - GAS INTERFERENCES AND ACCOMMODATIONS" (F.S. Fixed Sum). The value of such accommodation shall be computed by multiplying the appropriate unit prices bid to the quantity of work performed, as determined by the Engineer, and applying the total amount thus to be paid

to EP-7 bid item "UTL-GCS-2WS - GAS INTERFERENCES AND ACCOMMODATIONS". When EP-7 bid item "UTL-GCS-2WS - GAS INTERFERENCES AND ACCOMMODATIONS" does not exist, such additional accommodation work shall be at no cost to the City but shall be a matter of adjustment between gas facility operator and Contractor. Private facilities, other than gas, that become in interference due to gas interferences accommodations shall also be accommodated, if so directed by the Resident Engineer, at no additional cost to the City and, provided that its owner agrees to be responsible for all additional costs to Contractor, otherwise, such facility shall be ordered by the City to be maintained, shifted, relocated or replaced by its owner at his/her expenses.

2a. Water Main Accommodations:

When water main construction is to be performed in this contract, Contractor shall be required, if warranted by field conditions, and at locations designated by the Resident or Borough Engineer, to change the vertical or horizontal alignment of water mains including but not limited to all additional labor, material, work method accommodations, furnishing, delivering and laying offset fittings and pipes, etc., necessary in order to complete water main installation and, avoid gas interferences in the project area, including street intersections. Typical work method accommodations shall include, but not be limited to, pier and plate, installation of filter fabric and select fill, etc. Such work shall be performed as directed by the Engineer and in accordance with contract specifications and latest edition of water mains standards and specifications.

2b.Sewer Accommodations:

When sewer construction is to be performed in this contract, Contractor shall be required, if warranted by field conditions, and at locations designated by the Resident or Borough Engineer, to change the horizontal alignment of sewer facilities (if possible) including but not limited to all additional labor, material, work method accommodations, furnishing, delivering and construction of additional manholes or modification of manholes/catch basins, extending chute connections, house connections, using alternate materials and methods, poured-in-place structures, etc., necessary in order to complete sewer installation and, avoid gas interferences in the project area, including street intersections. The term sewer facility shall include, but not be limited to, all sewer pipe and appurtenances, manholes, catch basins, catch basin chutes, etc. Such work shall be performed as directed by the Engineer and in accordance with contract specifications and latest edition of sewer standards and specifications.

3. Quantity Overruns, EP-7 Funded Bid Items:

(THIS SUBSECTION IS NOT APPLICABLE FOR THIS CONTRACT)

~~No quantity overrun, in excess of one hundred twenty five (125) percent, shall be permitted for EP-7 funded bid items (gas) included in this contract, except when Resident Engineer determines that such overruns are caused by field modifications to planned City work, or approved construction methods, or contract scope changes. Overruns not paid by City shall be negotiated and paid to Contractor by gas facility operator who then shall be entitled to reimbursement by NYCDEP under established cost sharing procedures.~~

4. Changes And Extra Work:

This section is not applicable to work defined under "Emergency Reconstruction Contracts" or so-called "Where and When Contracts" since these projects, by definition, inherently encounter unanticipated gas facilities and cannot be pre-engineered. In all other cases, any contract changes proposed for City work shall also cover and include all associated changes to support and protection of gas facilities affected by such changes to City work. In all other cases where the Contractor finds that City work cannot be performed as planned and specified and/or, as approved because of a need to support, protect and/or alleviate interferences from gas facilities that were not listed and/or shown, or incorrectly shown in contract plans and specifications, he shall immediately notify the Resident Engineer and the facility operators' representative of his findings. Resident Engineer shall promptly examine such claims and determine

whether or not such work is covered by contract bid items and /or specifications (contract bid items and specifications shall include city contract items as well as EP-7 items). The Resident Engineer shall also examine the claim to determine if the application of EP-7 bid item "UTL-GCS-2WS - GAS INTERFERENCES AND ACCOMMODATIONS" is appropriate to resolve the claim. If upon examination, the Engineer determines that such field conditions were unanticipated (not shown and/or listed, or incorrectly shown in contract documents) and are not covered by bid items and contract specifications, he shall then direct the Contractor and the affected facility operator to negotiate the cost of supporting and protecting, and/or alleviating the impact on City work caused by such unanticipated gas facilities with each other with the understanding that the performance of City work shall continue during negotiations. If a cost agreement is reached, the Contractor and facility operator shall adjust such costs between themselves at no additional costs to the City contract. If the Contractor and affected facility operator do not reach an agreement concerning the price to be paid for the extra work within five (5) business days of the Engineer's directive to engage into such negotiations and, after considering: public safety and inconvenience, requirements of laws and regulations applicable to private utilities, integrity of all utility systems, including but not limited to sewer and water, gas, electric, telephone and, cable TV facilities, sound engineering practices, cost (long and short term) to all affected parties, and potential City work delays, then the Resident Engineer, depending on nature and severity of interferences with City work, shall either, direct the facility operator to relocate or replace its facilities at its own discretion and cost, reimbursable by NYCDEP under established gas cost sharing procedures or, direct the Contractor to perform the utility work on actual time, material and equipment costs basis pursuant to relevant contract requirements and amendments. Contract bid prices for any applicable items of work involved shall be applied, or converted to an allowance for time and material charges. Changes shall be for affected portions of utility work and, shall be processed with EP-7 funds.

5. Excavation:

All excavators shall notify the NYC/LI One Call Center at 1-800-272-4480 at least two (2) working days, not including the day of the call, but not more than ten (10) working days in advance of the start of any excavation work. The gas company(ies) will mark out its facilities within the project limits and provide Construction Inspector(s) during all excavation work in close proximity (within twelve (12) inches) to gas facilities. The Contractor shall exercise extreme caution when excavating in the vicinity of any gas facilities. Hand excavation shall be performed within twelve (12) inches of gas facilities. The Contractor prior to excavating underneath these facilities shall adequately support all gas facilities. Standard support details for gas facilities have been included in the specifications. Any damage to gas facilities shall be reported immediately to the gas company(ies). The Contractor shall be responsible for all cost associated with repairs made necessary by damages caused by his operations.

6. Backfilling And Street Restoration:

Backfilling operations and street restorations shall be in accordance with contract requirements.

7. Non-Responsive Bids:

Every gas (EP-7) bid item has a suggested "Not less than" value per unit indicated on contract bid sheet. Bids resulting in cost of less than suggested for EP-7 items are hereby prohibited and if submitted shall be considered NON-RESPONSIVE.

8. Minimum Clearances:

Clearance requirements for City work shall govern and supersede any clearance requirement of gas facility operator. Therefore, a minimum of twelve (12) inches clearance between private utilities and City water mains, sewers or related structures to be installed in this contract shall be maintained. When this clearance is not attainable, the Resident Engineer may allow a minimum of four (4) inches clearance. With less than twelve (12) inches clearance a neoprene/polyethylene shield (to be provided by facility operator) shall be installed as part of all work item specifications. However, if Resident Engineer determines that City work cannot be performed within allowable clearance and no reasonable City accommodation (no-cost change to City work) is possible, the City shall direct the facility operator to remove, relocate, shift,

or alter their facility(ies) pursuant to the New York City Administrative Code.

9. Work By Facility Operator:

The facility operator may find it necessary to perform the following types of work during performance of City work: accommodating a contractor's request for gas facilities modifications (in order to facilitate City contractor's proposed construction method) or, remedial and emergency work on gas facilities proper with their own resources and materials if an approved method of construction for City work causes unanticipated disturbances to gas facilities or, replacing defective gas facilities when they are exposed by the Contractor and their actual conditions are observable by the facility operator. Also included in the above category of defective gas facilities are: the presence of environmental contaminants attributable to the gas facility in or around gas facilities. If such work is deemed required by the facility operator or if facility operator is directed by the City to address such deficiencies at any time during the course of construction, the Contractor shall modify the construction schedule at no cost to the City and allow the facility operator five (5) business days to perform such work without interferences. Additional costs to the facility operator (in cases of accommodations) or, Contractor (in cases of defective gas facilities) due to such gas work, if any, shall be the responsibility of the parties involved and not of the City. Such costs shall be a matter of adjustment between the Contractor and the facility operator.

10. Materials Furnished By Facility Operator:

It shall be the Contractor's responsibility to inspect material to be installed by him immediately upon delivery and advise the facility operator through its authorized representative, of all damaged materials. The Contractor at no additional costs to the City or the facility operator shall replace any material that is damaged or lost after the Contractor's inspection.

11. Liability And Insurance:

Notwithstanding the provisions of this contract, the existing division of liabilities to third parties shall remain the same as between the City and the company. Therefore, it is specifically agreed by the City, company and Contractor (by bidding on this contract) that for the purpose of any liabilities to third parties, that the City contractor performing work directly and physically relating to gas company facilities in this project, shall be deemed an agent of the company and not an agent of the City, the New York City Municipal Water Finance Authority, or the New York City Water Board. Contractor shall include the company as an additional insured on all insurance policies maintained to comply with the City's insurance requirements.

12. Width And Depth Of Excavation:

Contractor shall not be authorized to deliberately change trench or excavation widths and/or depth specified without Engineer's approval. Enlargement of any side of excavation up to eighteen (18) inches beyond pay limits (or inside face of sheeting) requested by the Contractor for the installation of certain types of sheeting may be granted. However, such enlargements or those greater than allowable shall not be approved when, in the sole judgment of the City, field conditions allow the water mains and sewer work to be performed within the limits specified and, the sole purpose of such enlargement request is to impact adjacent utilities (public or private) whose support and protection are part of this contract. Any approval shall be given at no additional cost to the City contract, including EP-7 funding, and all costs associated with unauthorized enlargements shall be the sole responsibility of the Contractor.

13. Depth And Crossing Angles Of Gas Facilities:

Where gas facilities are shown (or specified as) crossing proposed alignment of sewers, water mains, catch basins and chute connections or any other proposed excavations at specific angles (as measured off plans or sketches or specified in contract), it shall be understood that actual field measurements may deviate (plus or minus) forty-five (45) degrees from those shown or specified. The cover, or depth from street surface to top of facilities, shall be as shown or specified in contract documents, no deviation is to be assumed. Where gas facilities are not shown on contract documents, but their support and protection are otherwise included in this contract then, all references to facilities crossing at "various angles and

depth" in the gas sections shall mean that such facilities are crossing sewer, water, catch basin and, catch basin chute, and other excavations at a ninety (90) degree angle to the proposed sheeting line or side of excavation (for unsheeted trenches) with an allowable deviation of forty-five (45) degrees in any direction, except for catch basin chute excavation where the allowable deviation shall be sixty (60) degrees. Where the cover is not noted or specified, the bottom face of such facilities shall be assumed to be crossing catch basin chutes at a depth of three (3) foot eight (8) inches or less from the street surface. Paragraph No. 2 above shall apply in cases of distribution water main construction. Appropriate bid items and specifications are provided for cases where angle and depth are greater than stated above. This section also applies to work defined in "Emergency Reconstruction Contracts" or so-called "Where and When Contracts". These contracts are not pre-engineered and consequently have no drawings, sketches or determined locations and so, gas facilities encountered will be crossing existing and proposed sewer, water, catch basin/catch basin chutes and all appurtenances at various angles and depths.

14. Maintenance Of Traffic For Gas Work:

All work pertaining to gas bid items and specifications shall be performed within the contract maintenance of traffic plan as specified in the contract document. The bid price for the Maintenance and Protection of Traffic shall cover all work pertaining to gas items. The City shall make compensation for additional maintenance and protection of traffic items in connection with gas item of work only when such additional work is deemed reasonable and necessary by the Resident Engineer and is approved by him prior to its performance.

15. Relocated Gas And Temporary Systems Installation:

In cases where the Contractor is allowed to select the location for temporary construction such as, installation of dewatering headers, wells, well points, etc., he shall not disturb any gas facilities shown on sketches provided in this section. The only exception shall be, if the affected gas company agrees to such relocation and provided that the cost of such relocation is a matter of adjustment between the company and Contractor, and at no cost to the City.

16. Role Of Company Inspector:

In any case in which the City elects to perform some or all support and protection work with its own employees, personnel or contractors, the facility operator shall provide onsite inspectors to approve and certify such support and protection work (exclusive of City accommodations) performed by the City's own employees, personnel, and contractors. Facility operator's inspectors are not authorized to direct City contractor during the performance of contract work. They shall act through the City Resident Engineer and provide him/her required approvals and certifications, prior to preparing partial payments of EP-7 items, in a format and frequency to be prescribed by the appropriate City Head of Construction.

17. Coordination With Gas Company:

The Contractor shall be required to notify the gas company(ies), in writing, at least two (2) weeks prior to the start of final paving in order to allow companies to complete any unfinished gas work located within the area to be paved. Every effort shall be made to maintain gas service with minimum inconvenience to the public.

III - TECHNICAL SECTION

SECTION 6.01 - Trench Crossings; Support And Protection Of Gas Facilities And Services.

1. Description:

Under this section, the Contractor shall provide all labor, materials, equipment, and incidentals required to support and/or protect the integrity of gas mains, services and appurtenances of any sizes, configurations, and operating pressures crossing trench excavations above subgrade for planned construction of sewers and water mains facilities. A gas service shall be defined as a gas pipe of three (3) inches in diameter or less branching from the main to a customer pick up point or property valve box. A gas main may be any size pipe that is part of a distribution or transmission network other than services described above. Crossings shall be defined as gas facilities spanning the width of excavation (one side to the other side). These crossings may be at various angles and depth as shown on "Gas Cost Sharing Work Standard Sketches Nos. 1 and 1A", and as specified in "General Provisions; Gas Cost Sharing Work Paragraph No. 13" and, at the locations shown or listed in contract documents. The gas company operating in the area, (facility operator), owns these facilities. The work shall be performed in accordance with contract specifications, plans, and at the directions of the Resident Engineer in consultation with the authorized representatives of the facility operator.

2. Method Of Construction:

A. Protection: In general, the gas facilities shall be protected as required by New York State Industrial Code 753. In particular, the Contractor shall use hand excavation methods (pick and shovel or hand held power tools) directly below the pavement base to expose the gas facilities (marked out by facility operators) and to ascertain the clearances and cover of the facilities with respect to the proposed excavation. Upon exposing the affected facilities sufficiently, at the discretion of the Resident Engineer, to ascertain the foregoing, Contractor shall be permitted to proceed with a combination of hand and machine excavation, as appropriate, outside a zone of protection whose limit shall be defined as a perimeter located twelve (12) inches from the outside face of each gas facility crossings (See "Gas Cost Sharing Work Standard Sketch No. 2"). If the facilities are in direct interference with City work, meaning that "Minimum Clearances" described in "General Provisions; Gas Cost Sharing Work Paragraph No. 8" cannot be maintained, and excavation has to be temporarily or permanently abandoned then this particular location shall become a test pit and dealt with as specified in Section 6.07, and "General Provisions; Gas Cost Sharing Work Paragraphs Nos. 2 and 8".

B. Support: Gas mains or services crossing excavations equal or less than four (4) feet wide are generally self supporting, unless field conditions as determined by the Resident Engineer require otherwise. The support requirements for gas mains and services crossing excavations greater than four (4) feet wide shall be as shown on the attached "Gas Cost Sharing Work Standard Sketch No. 1" and Contractor shall use sheeting methods that permit the maintenance of gas facilities in their existing locations and configurations. Alternate methods equivalent to those shown on the sketch or accommodations by the facility operator proposed by the Contractor in order to facilitate the execution of the specified work shall be allowable, provided that prior approval is obtained by the Contractor from the Engineer and the facility operator. The support and protection of gas facilities crossings shown on plans, drawings, listings or otherwise identified in this contract shall not be circumvented with the issuance of so called "order outs".

3. Method Of Measurement:

The Contractor shall be paid for supporting and/or protecting gas facilities crossing trench excavations under the appropriate bid items covered by this section. The Contractor shall be directly responsible to the facility operator for the total cost of using any alternate method requiring the use of resources owned by the facility operator. Regardless of the method used, the City shall pay the bid price for the appropriate support and/or protect item of work. The average rate charged by the facility operator for alternate support and protection work such as, disconnecting and reconnecting gas services is listed in attached "Schedule GCS-A".

4. Payment Restrictions:

These items shall not be paid for: gas services crossing unsheeted water main trench excavation; abandoned gas main/services identified by facility operator; gas mains/services crossing trench

excavations for fire hydrant branch connections pipes, catch basins and/or chutes (sewer drain pipe), house sewer and/or water services; gas facilities encroaching any face of excavation for sewer and/or water construction, all of which are covered under other contract sections. Also this item shall not be paid for new gas mains and services crossing water trenches when trenching for such new facilities has been performed by the Contractor in common with trench excavation for City work (overlapping trench limits). The cost of supporting and protecting such gas facilities crossings shall be deemed included in the cost of trench excavation for the new gas facilities. This payment restriction shall apply even if such common trench gas excavation is not part of the contract. The prices bid for items covered by this section represent full compensation to Contractor to completely perform the work described. No other bid items shall be combined with these items in order to pay for gas main and/or services crossing excavations specified herein.

5. Method Of Payment:

Each (Ea.) gas facility crossing trench excavation as described in these specifications shall be counted for payment.

6. Price To Cover:

The cost of timber/steel supports installed for gas facilities shall be included in the bid price. The bid price for each crossing shall also cover all additional supervision, labor, material (except those provided by the facility operator), equipment and insurance necessary to completely maintain the gas facilities without disruption of service to the customers and in accordance with contract plans, specifications and facility operator standards. The price shall also include: changes of method of operations; sheeting modifications where necessary to accommodate the gas facilities crossings; installation and removal of water pipe under gas facilities (so called "snaking"); extra care during excavation (including hand excavation under existing single and multiple gas facilities); extra backfilling and compaction around, over and under gas facilities; installation and removal of sheeting around gas facilities; associated maintenance and protection of traffic; barricades; and traffic plates that may be required to temporarily close and/or complete the work.

SECTION 6.02 - Extra Excavation For The Installation Of Catch Basin Sewer Drain Pipes With Gas Interferences.

1. Description:

Under this item, the Contractor shall provide all labor, materials, equipment, insurance, and incidentals for the extra excavation associated with the installation of catch basin sewer drain pipes (chute) under gas facilities of various sizes crossing the trench excavation at various angles and depth at the locations shown in the contract documents and also, for the support and protection of these facilities during associated excavation and backfill operations. The gas company operating in the area, (facility operator), owns these facilities.

2. Method Of Measurement:

The bid price shall be per location (Each) where extra excavation is required when catch basin sewer drain pipes are installed at an upstream invert depth lower than four (4) feet (up to a maximum of six (6) feet) from the proposed pavement grade because the bottom faces of interfering gas mains and appurtenances are located at a depth greater than three (3) foot eight (8) inches from proposed pavement surface (See "Gas Cost Sharing Work Standard Sketch No. 4").

3. Method Of Construction:

Incremental cost responsibility for chute excavation is determined by the first private facility encountered starting from catch basin structure proper and that prevents the installation of the chute connection at an upstream cover less than or equal to three (3) feet or any other minimum cover required to avoid City

facilities (e.g. water, sewer, etc.) as directed by the Resident Engineer.

4. Payment Restrictions:

This item shall not apply and related bid item shall not be paid in cases where:

A. Upstream invert chute is more than six (6) feet deep because of gas facilities.

B. Chute cannot be installed above existing gas facilities because of interferences with other private facilities that are not otherwise covered under this contract, regardless of upstream invert depth.

The above cases shall be at no cost to the City, but shall be a matter of adjustment between the Contractor and the facility operator(s).

5. Price To Cover:

The bid price shall cover the additional cost of all additional supervision, labor, materials, equipment and insurance, to complete the installation of catch basins and associated sewer connections in accordance with the contract plans and specifications. The price shall include: excavation by hand around and under single and multiple gas facilities; locating, supporting and protecting gas facilities; backfilling and all other items necessary to perform all work incidental thereto including: installation and removal of drain pipe under gas facilities ("snaking"); widening of trenches to facilitate the above work; subsequent additional backfill and pavement restoration; modifying precast catch basin window to accommodate connection; changing sheeting method and configuration to accommodate gas facility crossings; maintenance and protection of traffic; barricades; and installation of traffic plates that may be required to temporarily close and/or complete the work. The price shall not include removal of ledge rock and/or excavation of boulders in open cut.

SECTION 6.02.1 - Extra Excavation For The Installation Of Catch Basin Sewer Drain Pipes With Upstream Inverts Greater Than Six (6) Feet.

1. Description:

Under this item, the Contractor shall provide all labor, materials, equipment, insurance and incidentals for the extra excavation of catch basin chutes where the upstream invert is greater than six (6) feet under gas facilities of various sizes crossing the trench excavation at various angles and depth at the locations shown in the contract documents or as determined by field conditions and also, for the support and protection of these facilities during the associated excavation, sheeting and backfilling operations.

2. Method Of Measurement:

The bid price shall be per location (Each) where extra excavation and sheeting is required when the catch basin chute installed at an upstream invert depth lower than six (6) feet from the proposed pavement grade because the bottom faces of the interfering gas mains and appurtenances are located at a greater depth than three foot eight inches from the proposed pavement surface only.

3. Method Of Construction:

Incremental cost responsibility for chute excavation is determined by the first private facility encountered during such excavation when initiated from catch basin structure and that prevents the installation of the chute at an upstream cover less than or equal to three (3) feet or any other cover required to avoid City facilities as directed by the Resident Engineer.

4. Payment Restriction:

This item shall not apply and related bid item shall not be paid in cases where:

Upstream invert chute is less than or equal to six (6) feet deep because of gas facilities. Section 6.02 shall be paid.

5. Price To Cover:

The bid price shall cover the additional cost of all supervision, labor, materials, equipment and insurance to complete the installation of catch basin and associated sewer connections in accordance with the contract plans and specifications. The price shall include: excavation by hand around and under single and multiple gas facilities; locating, supporting and protecting gas facilities incidental thereto; widening of trenches to facilitate the above work; subsequent additional backfilling and pavement restoration; modifying pre-cast basin window to accommodate connection; the installation of catch basin with deeper sumps as specified; additional sheeting and changes in sheeting method and configuration to accommodate gas facility crossings; maintenance and protection of traffic; barricades; and installation of traffic plates that may be required to temporarily close and/or complete the work.

SECTION 6.03 - Removal Of Abandoned Gas Facilities. All Sizes.

1. Description:

Under this section the Contractor shall provide all labor, materials, equipment, insurance and, incidentals required for the removal of abandoned gas mains, services, or appurtenances thereof, located within the street shown on the contract plans, owned by gas company operating in the project area (facility operator), used or to be used for or in connection with or to facilitate the conveying, transportation, distribution or furnishing of gas (natural or manufactured or mixture of both) for light, heat, or power, but does not include property used solely for or in connection with business of selling, distributing or furnishing of gas in enclosed containers. Such removal shall include only abandoned gas facilities that interfere with (i.e. cause additional work) City work.

2. Determination Of Operating Status Of Gas Facilities:

The Contractor shall notify facility operator, as required by New York State Industrial Code 753. Gas facilities shall not be removed without the approval of the facility operator whose authorized representative shall certify in writing (specific facility or area wide facilities certification) and in a timely manner acceptable to the Resident Engineer that abandoned facilities are free of combustible gas and any other environmental contaminants prior to removal. The Resident Engineer shall rely on facility operator's certification. The facility operator may request the excavation of test pits (See Section 6.07) for this determination ahead of City work and, Contractor shall provide safe access, facilitate and permit facility operator to enter test pit excavations for the purpose of testing gas facilities to be removed by the Contractor. However, facility operator may prefer to make this test during performance of City work, in order to issue the above certification. This shall be permitted provided that it is agreed that additional costs, if any resulting from this choice shall be a matter of adjustment between the Contractor and facility operator only, and at no cost to the City.

3. Restrictions:

The facility operator shall be solely responsible for its contaminated gas facilities, surrounding contaminated soil and their disposal and abatement procedures, unless contract bid items are applicable and provided for such work. In such cases, the quantity removed shall be charged to EP-7 bid item "UTL- GCS-2WS - GAS INTERFERENCES AND ACCOMMODATIONS" at the City bid prices.

4. Method Of Measurement:

Abandoned gas pipeline removal shall be measured for payment per linear foot of pipe and appurtenances removed.

5. Price To Cover:

The price shall cover all additional cost of supervision, labor, materials, equipment, and insurance necessary to complete this work in accordance with the contract plans and specifications, including excavation by hand around and under other City and facility operator owned properties and, where necessary, support and protection of such properties. The price shall also cover breaking, cutting, and/or burning of abandoned gas pipes and their disposal from the site; sealing open ends remaining in the excavation with concrete or caps (caps to be provided by the facility operator) and backfilling of the area where the pipeline has been removed with clean backfill. The price shall also include any required dump charges. This item does not include any type of extra excavation, backfilling, compaction, pavement removal and restoration associated with abandoned gas facilities removal, all of which are covered under Section 6.06.

SECTION 6.03.1 - Removal Of Abandoned Gas Facilities With Possible Coal Tar Wrap. All Sizes. (For National Grid Work Only)

1. Description:

Under this section the Contractor shall provide all labor, materials, equipment, insurance and, incidentals required for the removal of abandoned gas mains, services or appurtenances thereof, located within the street shown on the contract plans, owned by the gas company operating in the project area (facility operator), used or to be used for or in connection with or to facilitate the conveying, transportation, distribution or furnishing of gas (natural or manufactured or mixture of both) for light, heat, or power, but does not include property used solely for or in connection with business of selling, distributing or furnishing of gas in enclosed containers. Such removal shall include only abandoned gas facilities that interfere with (i.e. cause additional work) City work. These gas facilities may be coated with Coal Tar Wrap and so, may require special handling and disposal methods as specified in National Grid Standard Operating Procedure 12-2, Coal Tar Wrap Handling and 12NYCRR56.

2. Determination Of Operating Status Of Gas Facilities:

The Contractor shall notify facility operator, as required by New York State Industrial Code 753. Gas facilities shall not be removed without the approval of the facility operator whose authorized representative shall certify in writing (specific facility or area wide facilities certification) and in a timely manner acceptable to the Resident Engineer that abandoned facilities are free of combustible gas and any other environmental contaminants prior to removal. The Resident Engineer shall rely on the facility operator's certification. The facility operator may request the excavation of test pits (See Section 6.07) for this determination ahead of City work and, the Contractor shall provide safe access, facilitate and permit facility operator to enter test pit excavations for the purpose of testing gas facilities to be removed by the Contractor. However, the facility operator may prefer to make this test during performance of City work, in order to issue the above certification. This shall be permitted provided that it is agreed that additional costs, if any, resulting from this choice shall be a matter of adjustment between the Contractor and the facility operator only, and at no cost to the City contract. Should such investigation result in the determination that the abandoned gas facilities do not contain Coal Tar Wrap then the removal of said facilities shall be covered under separate item (See Section 6.03).

3. Requirements:

The City Contractor shall excavate abandoned gas facility sufficiently, either in its entirety, or at locations determined by Contractor to allow the removal of Coal Tar Wrap (if present on the abandoned gas facility) and to facilitate the safe extraction of manageable lengths of abandoned pipe without damage to adjacent facilities, utilities or City structures either parallel to or crossing above or below abandoned gas facility. The Contractor is to allow access to the designated cutting points within the Contractor's trench by authorized National Grid personnel who will remove the Coal Tar Wrap as per National Grid procedures. This work by National Grid personnel shall be performed in a timely fashion and shall not unduly impede

the Contractor's progress and/or productivity. Upon completion of the coating removal, the Contractor shall be allowed to cut, burn or grind the gas facility and remove the section of abandoned pipe. The Contractor at a site designated by the Contractor shall stockpile the removed pipe. The facility operator will be responsible to provide trucking and disposal services with its own personnel and shall remove the stockpiled pipes during off hours or during such time as agreed to by the Contractor. Since the pipe removed will remain the property of the facility operator and is to be disposed of by the facility operator, the facility operator shall be responsible for any required notifications, filings, dump charges and incidentals associated with the disposal of abandoned gas facilities found to contain Coal Tar Wrap.

4. Method Of Measurement:

Abandoned gas pipeline removal shall be measured for payment per linear foot of pipe and appurtenances removed.

5. Price To Cover:

The price shall cover all additional cost of supervision, labor, materials, equipment and insurance necessary to complete this work in accordance with the contract plans and specifications, including excavation by hand around and under other City and facility operator owned properties and, where necessary, the support and protection of such properties. The cost shall also include hand excavation in the area(s) of proposed abandoned pipe cut(s), cutting and/or burning of abandoned gas pipes and stockpile of removed sections of abandoned pipe and associated maintenance and protection of traffic, blocking and temporary fencing if required. The unit price shall also cover sealing open ends remaining in the excavation with concrete or end caps (end caps to be provided by the facility operator) and backfilling of the area where the abandoned pipeline has been removed with clean backfill material. This item does not include any type of extra excavation, backfilling, compaction, pavement removal and/or restoration (temporary and permanent) associated with abandoned pipe removal ("lost trench"), all of which are covered under separate Section 6.06. The price shall also include allowance for any loss of productivity by the Contractor due to required facility operator work to remove pipe coating and prepare pipe for cutting as well as any change in Contractor's excavation method, additional trucking and/or stockpiling costs.

SECTION 6.03.1a - Removal Of Abandoned Gas Facilities With Possible Coal Tar Wrap. All Sizes. (For Con Edison Work Only)

1. Description:

Under this section the Contractor shall provide all labor, material, equipment, insurance and, incidentals required to prepare abandoned gas mains, services and appurtenances thereof located within the street shown on contract plans, owned by the gas company operating in the project area (facility operator), for removal due to interference with proposed City work. These abandoned gas facilities were, at one time, used for or in connection with or to facilitate the conveying, transportation, distribution or furnishing of gas (natural, manufactured or a combination of both) for light, heat, or power, but does not include property used solely for or in connection with business of selling, distribution or furnishing of gas in enclosed containers. Such preparation for removal shall include only abandoned gas facilities that interfere with (i.e. cause additional work) City work. These gas facilities may be coated with Coal Tar Wrap which may contain asbestos or PCB's and so, may require special handling and disposal methods as specified in Con Edison - ASBESTOS MANAGEMENT MANUAL, CHAPTER 6 - ASBESTOS WORK PROCEDURES, SECTION 06.04 - COAL TAR WRAP REMOVAL. For under 25' (feet) in length and an approved NYC-DEP variance for over 25' (feet).

2. Determination Of Operating Status Of Gas Facilities:

The Contractor shall notify facility operator, as required by New York State Industrial Code 753. Gas Facilities shall not be removed without the approval of the facility operator whose authorized representative shall certify in writing (specific facility or area wide facilities certification) and in a timely

manner acceptable to the Resident Engineer that abandoned facilities are free of combustible gas and any other environmental contaminants prior to removal. The Resident Engineer shall rely on the facility operator's certification. The facility operator may request the excavation of test pits (See Section 6.07) for this determination ahead of City work and Contractor shall provide safe access, facilitate and permit facility operator to enter test pit excavations for the purpose of testing gas facilities. However, the facility operator may prefer to make this test during performance of City work in order to issue the above certification. This shall be permitted provided that it is agreed that additional costs, if any, resulting from this choice shall be a matter of adjustment between the Contractor and the facility operator only, and at no cost the City contract. Should such investigation result in the determination that the abandoned gas facilities do not contain Coal Tar Warp then the removal of said facilities shall be covered under separate item (See Section 6.03).

3. Requirements:

The Contractor shall excavate abandoned gas facility sufficiently, either in it's entirety, or at locations determined by Contractor to allow the removal of Coal Tar Wrap (if present on the abandoned gas facility) and to facilitate the safe extraction of manageable lengths of abandoned pipe without damage to adjacent facilities, utilities or city structures either parallel to or crossing above or below abandoned gas facility. The Contractor is to allow access to the designated cutting points within the Contractors trench by authorized Con Edison personnel who will remove the Coal Tar Wrap as per Con Edison and/or NYC-DEP approved procedures. This access shall conform to all applicable codes, rules & regulations. This work by Con Edison personnel shall be performed in a timely fashion and shall not unduly impede the Contractors progress and/or productivity. Upon completion of the coating removal, the Contractor shall be allowed to cut, burn or grind the gas facility and remove the section of abandoned pipe. Contractor shall designate a specific site to stockpile those removed pipes. The facility operator will be responsible to provide trucking and disposal services with its own personnel and shall remove the stockpiled pipes during off hours or during such time as agreed to by the Contractor. Since the pipe removed will remain the property of the facility operator and is to be disposed of by the facility operator, the facility operator shall be responsible for any required notifications, filings, dump charges and incidentals associated with the disposal of abandoned gas facilities found to contain Coal Tar Wrap.

4. Method Of Measurement:

Abandoned gas facility removal shall be measured for payment per linear foot of pipe and appurtenances removed.

5. Price To Cover:

The price shall cover all additional cost of supervision, labor, materials, equipment and insurance necessary to complete this work in accordance with the plans and specifications, including, but not limited to, excavation by hand around and under other City and facility operator owned properties and, where necessary, the support and protection of such properties. The cost shall also include hand excavation in the area(s) of proposed abandoned pipe cut(s), cutting and/or burning of abandoned gas pipes and stockpile of removed sections of abandoned pipe and associated maintenance of traffic, blocking and temporary fencing if required. The unit price shall also cover sealing open ends remaining in the excavation with concrete or end caps (end caps to be supplied by facility operator) and backfilling of the area where the abandoned pipeline has been removed with clean backfill material. This item does not include any type of extra excavation, backfilling, compaction, pavement removal and/or restoration (temporary and permanent) associated with abandoned pipe removal ("lost trench"), all of which are covered under separate Section 6.06. The price shall also include allowance for any loss of productivity by the Contractor due to required facility operator work to remove pipe coating and prepare pipe for cutting as well as any change in Contractor excavation method, additional trucking and/or stockpiling costs.

SECTION 6.04 - Adjust Hardware To Grade Using Spacer Rings/Adaptors. (Street Repaving.)

1. Description:

Under this section, the Contractor shall provide all labor, supervision, materials, equipment, insurance and incidentals required to adjust to final grade gas street surface hardware located within the contract area boundaries shown on the plans. The gas company operating in the area, (facility operator), owns these facilities. The work shall be performed in accordance with the contract plans, specifications and at the directions of the Resident Engineer in concurrence with authorized representative of the facility operator.

2. Materials:

The facility operator shall furnish and deliver all prefabricated hardware parts required. These include adaptors for the grade adjustment proper and new street hardware if existing ones are found to be defective, all in accordance with the facility operator standards and City rules and regulations. The Contractor shall notify the facility operator of the installation schedule at least three (3) business days before materials are required on the site. Should the facility operator fail to deliver the necessary material according to any schedule mutually agreed upon by the Contractor and facility operator, the City shall not be responsible for any delays attributable thereto, nor for the failure of delivery of such materials. On project where material storage is not permitted on site, the facility operator shall deliver the required material to the Contractor's yard and it shall be the Contractor's responsibility to transport the material to the work site when needed for installation. It shall also be the Contractor's responsibility to inspect the materials to be installed by him immediately upon delivery and advise the facility operator through its authorized representative, of all damaged materials. The Contractor at no additional expense to the City or the facility operator shall replace any material that is damaged or lost after the Contractor's inspection.

3. Method Of Measurement:

The Contractor shall be paid for each six (6) inch round box and/or nine (9) inch square box adjusted to grade regardless of adjustment height requirements.

4. Price To Cover:

The unit price bid for this item shall include all additional labor, supervision, insurance, equipment and, material (except those to be provided by the facility operator), required to adjust each box to grade as required in the contract plans and specifications. The bid price shall also include the removal of existing frames and covers from existing facilities to be salvaged and returned to the facility operator and, all material transportation from the Contractor's material storage yard to the work site. In addition the bid price shall include "chipping" around existing box using appropriate means and methods where grinding is required.

SECTION 6.05 - Adjust Hardware To Grade By Resetting. (Road Reconstruction.)

1. Description:

Under this item, the Contractor shall provide all labor, supervision, materials, equipment, insurance and incidentals required to adjust to the proposed grade gas street surface hardware located within the contract area boundaries shown on the plans. The gas company operating in the area, (facility operator), owns these facilities. The work shall consist of either building up or lowering or resetting the casting by removing the existing frame and cover building up or decreasing the existing installation, replacing the frame and/or cover if damaged or worn out, as determined by the Resident Engineer, with a new frame and/or cover furnished by the owner, and setting the frame and cover to new elevation. The work shall be performed in accordance with the contract plans, specifications and at the directions of the Resident Engineer.

2. Materials:

The facility operator shall furnish and deliver all new hardware parts required. The Contractor shall furnish

materials such as mortar, bricks and concrete in compliance with contract requirements. At locations where high-early strength concrete is required under this contract to be placed adjacent to gas facilities, then the requirement for concrete shall be high-early strength complying with the current New York State Department of Transportation, Standard Specifications for Class F concrete. Existing castings may be replaced as required and deemed necessary by the Engineer and by City rules and regulations. The Contractor shall install the new castings of various sizes furnished by the facility operator. The Contractor shall notify the facility operator of the installation schedule at least three (3) business days before materials are required on the site and, shall provide off-loading services to the facility operator. Should the facility operator fail to deliver the necessary material according to any schedule mutually agreed upon by the Contractor and facility operator, the City shall not be responsible for any delays attributable thereto, nor for the failure of delivery of such materials. Such delays shall be a matter of adjustment between the Contractor and the facility operator. On project where material storage is not permitted on site, the facility operator shall deliver the required material to the Contractor's yard and it shall be the Contractor's responsibility to transport the material to the work site when needed for installation. It shall also be the Contractor's responsibility to inspect the materials to be installed by him, immediately upon delivery and advise the facility operator through its authorized representative, of all damaged materials. The Contractor at no additional expense to the City or the facility operator shall replace any material that is damaged or lost after the Contractor's inspection.

3. Methods Of Construction:

The Contractor shall remove and reinstall existing castings or install new castings to the proposed grade. Setting and resetting the castings shall be done with mortar and brick according to the standards of the facility operator. Work shall be performed in a workmanlike manner. Castings that are deemed unacceptable for resetting shall remain the property of the facility operator and he shall be responsible for their removal and proper disposal from site. No traffic shall be allowed on adjusted street hardware until permitted by the Engineer.

4. Method Of Measurement:

The Contractor shall be paid for each gas hardware adjusted to grade regardless of size or adjustment height requirements (up or down).

5. Price To Cover:

The unit price bid for this item shall include all additional labor, supervision, insurance, equipment and, material (except those to be provided by the facility operator), required to adjust each gas hardware to grade as required in the contract plans and specifications. The bid price shall also include the removal of existing frames and covers from existing facilities; building up the existing installations with bricks and mortar, or lowering the existing installation by removing bricks and mortar; replacing damaged frames and/or covers with new frames and/or covers furnished by the facility operator; setting the frames and covers to the new elevations; protect existing installations; repair minor structural damages to existing installations prior to resetting frames; unloading of furnished castings at the Contractor's yard and transporting castings from the Contractor's yard to the job site as required; completing the work in accordance with the contract plans, specifications and, at the directions of the Engineer. In addition the bid price shall include "chipping" around existing gas facilities using appropriate means and methods where grinding is required.

SECTION 6.06 - Special Care Excavation And Backfilling.

1. Description:

Under this section, the Contractor shall provide all labor, materials, equipment, insurance and incidentals required to support and protect the integrity of live gas facilities including mains, services, related structures and appurtenances during excavations. The gas company operating in the area, (facility operator), owns these facilities. The work shall be performed in accordance with the contract plans, specifications and

at the directions of the Resident Engineer in consultation with authorized representatives of the facility operator.

2. Applicability Of Section:

This section shall apply to live gas facilities of various sizes located within two (2) feet of any face of unsheeted excavation, (unsheeted excavation refers to any excavation performed for city work and includes excavations performed that are to be subsequently sheeted using approved methods) and paralleling or, encroaching any face of excavation. Also, for crossings greater than forty-five (45) degrees and/or located at a cover depth greater than five (5) feet from existing street surface. Parallel facilities are not exposed at any time during excavation (See "Gas Cost Sharing Work Standard Sketch No. 5"). Encroaching facilities are partially exposed inside the limit of excavation (See "Gas Cost Sharing Work Standard Sketch No. 5"). This section shall also apply to gas facilities crossing catch basins excavation, and catch basins sewer connections (chutes) trench excavation only when extra depth (covered in other section), is not required for chutes installations because of such utilities interferences (See "Gas Cost Sharing Work Standard Sketch No. 3"). This section shall also apply to gas services (if shown or otherwise listed in contract documents) crossing unsheeted excavations for water mains, gas facilities crossing fire hydrant branch connections, house sewer and/or water service connections excavations. This section shall also apply for so called "loss trench", as described further, and for additional excavation (pavement and/or soil), backfilling, compaction, roadway base and pavement restoration due to abandoned gas facilities, only if removed by Contractor. If operating status of gas facilities cannot be determined prior to excavation then such facilities shall be considered live and this section shall fully apply. The excavation around fully exposed live gas facilities along and within limits of excavation (not crossings) shall be covered by this section also (not shown on "Gas Cost Sharing Work Standard Sketch No. 5"), however the support requirement, if any is required, of such facilities is beyond the scope of these specifications and therefore shall be the responsibility of facility operator to determine and prescribe, at no cost to the City contract, but shall be a matter of adjustment between the Contractor and facility operator.

3. Payment Restriction:

No special care excavation shall be paid for abandoned gas facilities paralleling and/or encroaching excavation and therefore are not in direct interference with City work. Except as allowed in this section, the bid item specified under this section shall not be used in combination with items covered under other sections for work done due to a particular gas facility. This item shall not be paid for new gas facilities when trenching for such new facilities has been performed by the Contractor of record in common with trench excavation for City Work (overlapping trench limits). The cost of excavating with care as defined in this section shall be deemed included in the cost of trench excavation for the new gas facilities. This restriction shall apply even if such gas common trench excavation is not part of the contract. If facilities are in direct interference with City work, meaning that "Minimum Clearances" described in "General Provisions; Gas Cost Sharing Work Paragraph No. 8" cannot be maintained and excavation has to be temporarily or permanently abandoned then this particular location shall become a test pit and dealt with as specified in Section 6.07 and "General Provisions; Gas Cost Sharing Work Paragraphs Nos. 2 and 8".

4. Method Of Construction:

All excavation in the vicinity of gas facilities shall be as required by NYS Industrial Code 753. Where these facilities are paralleling and located two (2) feet or less from the limits of the proposed excavation, the Contractor shall use hand excavation methods (pick and shovel or hand held power tools) to ascertain the clearances of these facilities with respect to the proposed excavation. Once the location of these facilities with respect to the proposed excavation is verified to the satisfaction of the Resident Engineer, the Contractor shall then proceed with a combination of hand and machine excavation as required preserving the integrity of the facilities. The installation of timber supports or underpinning, when soil foundation cannot fully support partially exposed pipes, may be required to prevent pipe movement as directed by the Resident Engineer.

5. Method Of Payment:

The unit price for this work item shall be based on cubic yard (CY) of average excavation with care and, is to be considered as an incremental cost for performing City work with gas facilities interferences.

6. Method Of Measurement:

A. For Paralleling Facilities: Volume calculated as: Depth as measured from existing street surface to the bottom of unsheeted trench excavation allowable by OSHA regulations, multiplied by, the width measured as one (1) foot from the face of excavation toward the center of excavation, multiplied by the length of parallel facility, divided by twenty-seven (27) cubic feet per cubic yard (See "Gas Cost Sharing Work Standard Sketch No. 5"). The gas facility is no longer considered to be in interference once sheeting has been installed, therefore no further compensation for paralleling facilities as described above will be made.

B. For Encroaching Facilities: Volume calculated as: Depth of trench as allowable by OSHA, maximum up to five (5) feet multiplied by, the width of partially exposed pipe plus one (1) foot, multiplied by the length of facility encroachment, divided by twenty-seven (27) cubic feet per cubic yard (See "Gas Cost Sharing Work Standard Sketch No. 5").

C. Fully Exposed Gas Facilities: (Not shown on "Gas Cost Sharing Work Standard Sketch No. 5") along and inside trench and/or crossing trench at an angle greater than forty-five (45) degrees and/or a cover depth greater than five (5) feet from the existing street surface. The volume shall be measured as the depth of trench excavation multiplied by the distance measured along the sheeting line between two (2) points of intersections of the gas facilities and the sides of trench excavation, multiplied by the width of trench excavation.

D. For Additional Excavation And Restoration Due To So Called "Loss Trench", When The Integrity Of Pavement And Soil Above And Around Existing Live Gas Facilities Cannot Be Maintained Due To Its Lack Of Cohesiveness: Volume shall be calculated as: Depth of unsheeted trench excavation multiplied by width measured as distance of facility from closest edge of unsheeted excavation plus, width of facility proper plus, one (1) foot or a maximum width of three (3) feet multiplied by length of facility fully exposed divided by, twenty-seven (27) cubic feet per cubic yard (not shown on "Gas Cost Sharing Work Standard Sketch No. 5").

E. For Facilities Crossing Excavation For Catch Basins, Or Chutes Installations (When NYCDEP Funded) Or Fire Hydrant Branch Connections, Or Unsheeted Water Main Trench, Or House Sewer And/Or Water Services: Volume calculated as: Depth as measured from existing street surface to the bottom of the trench excavation multiplied by, the width taken as the outside diameter of pipe or the width of structure plus one (1) foot on either side (two (2) feet), multiplied by, the length of exposed facility crossing the trench, divided by twenty-seven (27) cubic feet per cubic yard (not shown on "Gas Cost Sharing Work Standard Sketch No. 5").

Overlapping volume dimensions measured as described above may occur when multiple facilities are paralleling excavations, encroaching excavations or crossing catch basins and catch basin chute installations. In such cases, all such facilities shall be counted as one limited by the extreme pipes, faces (See "Gas Cost Sharing Work Standard Sketch No. 2"). The volume shall then be calculated as described above.

7. Price To Cover:

The bid price shall also cover all additional supervision, labor, material, equipment and insurance necessary to excavate while protecting and maintaining (excluding supports for fully exposed live gas) gas facilities without disruption of service to the public and in accordance with contract specifications. The price shall also include, changes of sheeting method and excavation width configuration where necessary to accommodate gas facilities in their existing locations; difficulties during the installation of catch basins, chute connections, hydrant branch, and house sewer and water connections under or over gas facilities; loss of productivity due to slower rate of excavation (special care) during excavation, including the use of such methods as: hand excavation around existing single and multiple facilities, extra excavation and

backfilling due to lost trench because of existing and adjacent gas facilities, compaction, removal of sheeting from the facilities, extra roadway base restoration and temporary pavement, associated maintenance and protection of traffic, barricades, and traffic plates that may be required to temporarily close and/or complete the work.

SECTION 6.07 - Test Pits For Gas Facilities.

1. Description:

Under this section, the Contractor shall furnish all labor, materials, insurance, equipment and appliances necessary to excavate, sheet and, maintain test pits at locations approved by the Resident Engineer in consultation with the facility operator. Test pits shall be dug in order to ascertain exact locations, cover and invert elevations, clearances, alignment and operating status (live or dead) of existing gas facilities. The Contractor shall inspect jointly with the Resident Engineer and facility operator, gas facilities and other structures uncovered, take all relevant measurements and elevations as directed by the Resident Engineer. Tests to determine operating status of gas facilities shall be performed by facility operator. The pits shall be covered with steel plates during daytime nonworking hours, and uncovered, as required, until the inspection work is completed. Testing of gas facilities may require a maximum of four (4) hours. Then, the pits shall be backfilled with clean fill, and resurfaced with temporary pavement. All traffic shall be maintained and all safety measures as stipulated shall be complied with.

2. Methods Of Construction:

A. Excavation: Existing pavement to be removed shall be neatly cut along lines of removal with a saw or other approved equipment which leaves a neat straight joint line along the juncture with subsequently replaced pavement. Excavation in the vicinity of utilities and other structures shall be performed using hand tools. Use of hand operated pneumatic and electric jackhammers will be permitted only for breaking pavement and removal of masonry, concrete and boulders, or as otherwise directed by the Resident Engineer. The Contractor shall properly dispose of all materials excavated from test pits away from site. Test pits shall be excavated at locations shown on the contract drawings or as directed by the Resident Engineer. Additional test pits may be required and shall be excavated where required, as ordered by the Resident Engineer. All test pits shall be excavated to a depth and size necessary to locate the existing facilities. Sheeting shall be used when depth of excavation exceeds five (5) feet. The sheeting required shall be furnished and installed in full compliance with the State of New York and Federal Safety Codes requirements and as specified in contract, whichever is more stringent. Care shall be taken that no existing gas facilities or other structures are broken or damaged. All broken or damaged facilities shall be reported immediately to facility operator who shall decide whether such facilities shall be repaired or replaced by company forces or by City contractor and in conformance with "General Provisions; Gas Cost Sharing Work Paragraph No. 9". Contractor shall excavate all material encountered, including large masses of concrete, cemented masonry and boulders, as directed by the Resident Engineer. Any type of excavation protection used, shall satisfy the following:

(a) Industrial Code Rule 753.
(b) Prevent injury to workers and the public, and avoid damage to existing water, sewer, and gas pipes or other structures, and to pavements and their foundations, through caving or sliding of the banks of the excavation.

Should it become necessary, as determined by the Resident Engineer, to enlarge any test pit in any dimension after sheeting has been placed, the Contractor shall remove portions of the sheeting, as necessary, enlarge the test pits as directed, and replace the sheeting without additional compensation for this work other than for the additional volume of material excavated.

B. Maintenance Of Test Pits: Excavated test pits shall be maintained free of debris and kept dry by the Contractor in order to permit the inspection and measurements and to determine the locations of facilities. In order to accomplish this, Contractor shall, upon completion of excavation and placement

of sheeting (if depth greater than five (5) feet), furnish and install adequate steel plates and posting over the excavated pits and shall temporarily remove all equipment debris and workers, and relocate barricades in order to open the full width of street to traffic during nonworking hours. The Contractor shall then, at no additional cost, relocate such barricades, barrels, cones and other warning devices and remove steel plates, as and when directed by the Resident Engineer to facilitate the inspection of exposed facilities. When work is being performed and the pits are not covered with steel plates, the Contractor shall provide complete and safe access to the test pits as may be required, and he shall provide construction barricades and maintain traffic at all times as shown or as directed by the Resident Engineer. Upon completion of test pit inspection by the Resident Engineer, the pit shall be backfilled by the Contractor as specified in contract, except that backfill material shall conform to contract specifications for such purpose.

C. Pavement And Sidewalk Restoration: After backfilling is completed, the Contractor shall construct a temporary pavement consisting of a minimum of four (4) inches thick asphaltic concrete mixture in roadway areas or a two (2) inches thick asphaltic concrete mixture in sidewalk areas in order to maintain existing pedestrian and vehicular traffic. This temporary pavement shall be maintained until permanent pavement and sidewalk replacement is constructed as specified in contract.

3. Measurements:

The quantity to be measured for payment shall be the number of cubic yards of material removed from within the limits of the pit dimensions as directed by the Resident Engineer. The volume occupied by existing pipes or other structures remaining within the maximum payment lines will not be deducted from the total volume measured except, where the cross sectional area of these facilities exceeds four (4) square feet. As determined by the Resident Engineer, the quantity measured for payment may be proportionate to a fair and reasonable estimate of gas responsibility in the total volume excavated.

4. Price To Cover:

The contract price bid per cubic yard for test pits shall cover all additional costs of labor, material, insurance, equipment, appliances and incidentals required to excavate test pits, including removal and disposal of excavated materials, sheeting, steel plating, backfill, compaction and temporary pavement and sidewalk restoration all in accordance with the specifications and as directed by the Resident Engineer. The price shall also include the cost of providing safe access to the excavation by facility operator for the performance of certain test to determine operating status of gas facilities prior to City work. The price shall also include support and protection of all gas facilities crossing excavation, paralleling and/or encroaching any face of excavation.

SECTION 6.08 - "NO TEXT"

SECTION 6.09 - Trench Excavation and Backfill for New Gas Mains and Services (For National Grid Work Only)

1. Description:

Under this section, the contractor shall furnish all labor, materials, equipment, insurance, permits and incidentals required to break/remove roadway and sidewalk pavement, excavate, backfill and restore gas trenches. The trench to be excavated shall be determined by the size of the gas facility to be installed. The work shall be performed in accordance with applicable specifications, and/or at the direction of the Resident Engineer in consultation with the facility operator.

2. Materials:

All materials used to excavate and prepare trenches shall be supplied by the Contractor and be approved

by the facility operator in consultation with the Resident Engineer.

3. Method of Construction:

Excavation – The Contractor shall saw cut and/or break and remove existing roadway which may include but is not limited to, asphalt, concrete and cobblestone, utilizing approved equipment that leaves a neat straight joint line along the juncture with subsequently replaced pavement. Prior to starting the trenching operation, the contractor shall excavate the appropriate gas main tie-in pits at the extremities of the gas main sections to be replaced. Test pits shall be excavated to determine exact location of all tie-in pits and at appropriate intervals along proposed trench excavation to verify lane and clearances as shown on the contract plans. The tie-in pits shall be adequately protected by the contractor using wood fencing or steel traffic plates until such time when the facility operator has completed the tie-in work. The Contractor shall be permitted to excavate utilizing a combination of machine and hand excavation, as field conditions warrant, and as directed by the facility operator. The trench shall be adjusted so as to provide for a nominal cover on the new gas facilities or as required based on field conditions, applicable specifications, or as directed by the facility operator in consultation with the Resident Engineer. The width of the trench shall be as directed by the facility operator in consultation of the Resident Engineer. The bottom of the trench shall be graded smooth with a minimum cushion of 3 inches of clean sand and in conformance with applicable specification and be compacted, to minimize initial settlement and to avoid "point" support of new gas facilities. All stones projecting into the trench bottom shall be removed, and the voids backfilled before the new gas facilities are installed. Where streets are not to final grade, the cover shall be measured from the final grade, or the existing grade, whichever provides the deeper trench. Excavation in the vicinity of utilities and other structures shall be performed using hand tools. The contractor shall properly dispose of all materials excavated away from site. Size and location of excavation shall be as directed by the facility operator in consultation with the Resident Engineer. Trenches shall be excavated to a depth and size necessary to facilitate the installation of the new gas facility and in conformance with the applicable specification. All existing facilities that are encountered during trench excavating shall be protected in a manner suitable to the facility operator in consultation with the Resident Engineer. Tight sheeting shall be used, as required, based on field conditions and/or when the depth of excavation is equal to or greater than five feet. Skeleton type sheeting will not be permitted. The sheeting required shall be furnished and installed in full compliance with the State of New York and Federal Safety Code requirements and in compliance with applicable specifications and/or as directed by the facility operator in consultation with the Resident Engineer. Care shall be taken that no existing gas facilities or other structures are broken or damaged. Contractor shall excavate all material encountered necessary to facilitate the installation of the new gas facilities, and as directed by the facility operator. Care should be taken to avoid damage to existing utility facilities and structures, and to pavements and their foundations, and to avoid caving or sliding banks within the excavation.

Maintenance of Trench Excavation - Excavated trenches shall be maintained free of debris and kept dry by the contractor. In order to accomplish this, contractor shall, upon completion of excavation and placement of sheeting (as required and/or if depth is equal to or greater than five feet), furnish and install adequate steel plates, as directed by the facility operator in consultation with the Resident Engineer, and posting over the excavated trenches and shall temporarily remove all equipment debris and workers, and relocate barricades in order to open the full width of street to traffic during non-working hours, as required based on DOT requirements. National Grid forces will perform all live gas main connections, dead gas main cut-outs, and/or service work associated with disconnecting and reconnecting from old to new gas main The Contractor shall then, at no additional cost, relocate such barricades barrels, cones and other warning devices and remove steel plates, as and when directed by the facility operator in consultation with the Resident Engineer to facilitate the installation of the new gas facilities. When work is being performed and the excavations are not covered with steel plates, the Contractor shall provide complete and safe access to the trench as may be required, and shall provide construction barricades and maintain traffic at all times as shown or as directed by the facility operator in consultation with the Resident Engineer. The contractor has the responsibility to maintain and set to grade all National Grid hardware during backfill and pavement restoration. Upon completion of installation of the new gas facility, the trench excavation shall be backfilled by the contractor in accordance with Contract requirements and all backfill material shall conform to contract specifications for such purpose.

Pavement and Sidewalk Restoration - After backfilling is completed, the contractor shall install temporary pavement consisting of six inches (6") thick asphaltic concrete mixture in roadway areas or a two inches (2") thick asphaltic concrete mixture in sidewalk areas in order to maintain existing pedestrian and vehicular traffic. This temporary pavement shall be maintained until permanent replacement as specified in contract. Permanent pavement restoration shall be as required by the appropriate contract specifications and as directed by the Resident Engineer.

4. Method of Measurement:

The quantity to be measured for payment shall be the number of cubic yards (C.Y.) of trench actually excavated, including roadway pavement, base and/or sidewalk concrete removed within the limits of the trench as directed by the Resident Engineer in consultation with the facility operator. The volume occupied by existing pipes or other structures will be deducted from the total volume measured as shown on contract drawing(s) Title: EP-7 SECT. 6.09 GAS SPECIALTY CONTRACTOR WORK, or as encountered based on existing field conditions.

5. Price to Cover:

The unit price bid per cubic yard for excavation shall include the cost of all supervision, labor, material, equipment, insurance and incidentals necessary to complete excavation trenches, including backfill, compaction testing and restoration of trenches and tie-ins pits as specified or shown on the contract, plans. The bid price shall also include the cost of coordinating the sewer and water main work to be performed by the contractor with the gas installation work to be performed by others. The price shall also include, associated maintenance of traffic, and traffic plates and openings and closings of plates as may be required in order to provide access to the facility operator during the new gas facility installation, and installing, removing and maintaining tight sheeting that may be required, cut, break and remove various thickness of surface and base pavement, excavate by hand, furnish, place and compact, in compliance with DOT requirements, clean sand backfill following installation of the gas facility. Any required removing, trucking, storing, and disposing of material shall be deemed included in the unit price. The price shall also include the cost of providing temporary pavement restoration. Permanent pavement restoration shall be deemed included in this item, as required and as directed by the Resident Engineer.

SECTION 6.09a Trench Excavation and Backfill for New Gas Mains and Services (For Con Edison Work Only)

1. Description:

Under this section, the contractor shall furnish all labor, materials, equipment, insurance, permits and incidentals required to break/remove roadway and sidewalk pavement, excavate, backfill and restore gas trenches. The trench to be excavated shall be determined by the size of the gas facility to be installed. The work shall be performed in accordance with applicable specifications, and/or at the direction of the Resident Engineer in consultation with the facility operator.

2. Materials:

All materials used to excavate and prepare trenches shall be supplied by the Contractor and be approved by the facility operator in consultation with the Resident Engineer. Clean sand backfill material shall be used and shall conform to Con Edison specification EO-1181-rev.6, General Specification for Backfilling of Trench and Small Openings.

3. Method of Construction:

Excavation – The Contractor shall saw cut and/or break and remove existing roadway which may include but is not limited to, asphalt, concrete and cobblestone, utilizing approved equipment that leaves a neat straight joint line along the juncture with subsequently replaced pavement. Prior to starting the trenching operation, the contractor shall excavate the appropriate gas main tie-in pits at the extremities of the gas main sections to be replaced. Test pits shall be excavated to determine exact location of all tie-in pits and

at appropriate intervals along proposed trench excavation to verify lane and clearances as shown on the contract plans. The tie-in pits shall be adequately protected by the contractor using wood fencing or steel traffic plates until such time when the facility operator has completed the tie-in work. The Contractor shall be permitted to excavate utilizing a combination of machine and hand excavation, as field conditions warrant, and as directed by the facility operator. The trench shall be adjusted so as to provide for a nominal cover on the new gas facilities or as required based on field conditions, applicable specifications, or as directed by the facility operator in consultation with the Resident Engineer. The width of the trench shall be as directed by the facility operator in consultation of the Resident Engineer. The width and depth of the trench shall conform to Con Edison Gas Operations drawing 309495 rev. 4, Trench Excavation for Gas Mains Up to 350 PSIG, or as directed by the facility operator in consultation of the Resident Engineer. The bottom of the trench shall be graded smooth with a minimum cushion of 3 inches of clean sand and in conformance with applicable specification and be compacted, to minimize initial settlement and to avoid "point" support of new gas facilities. All stones projecting into the trench bottom shall be removed, and the voids backfilled before the new gas facilities are installed. Where streets are not to final grade, the cover shall be measured from the final grade, or the existing grade, whichever provides the deeper trench. Excavation in the vicinity of utilities and other structures shall be performed using hand tools. The contractor shall properly dispose of all materials excavated away from site. Size and location of excavation shall be as directed by the facility operator in consultation with the Resident Engineer. Trenches shall be excavated to a depth and size necessary to facilitate the installation of the new gas facility and in conformance with the applicable specification. All existing facilities that are encountered during trench excavating shall be protected in a manner suitable to the facility operator in consultation with the Resident Engineer. Tight sheeting shall be used, as required, based on field conditions and/or when the depth of excavation is equal to or greater than five feet. Skeleton type sheeting will not be permitted. The sheeting required shall be furnished and installed in full compliance with the State of New York and Federal Safety Code requirements and in compliance with applicable specifications and/or as directed by the facility operator in consultation with the Resident Engineer. Care shall be taken that no existing gas facilities or other structures are broken or damaged. Contractor shall excavate all material encountered necessary to facilitate the installation of the new gas facilities, and as directed by the facility operator. Care should be taken to avoid damage to existing utility facilities and structures, and to pavements and their foundations, and to avoid caving or sliding banks within the excavation.

Maintenance of Trench Excavation - Excavated trenches shall be maintained free of debris and kept dry by the contractor. In order to accomplish this, contractor shall, upon completion of excavation and placement of sheeting (as required and/or if depth is equal to or greater than five feet), furnish and install adequate steel plates, as directed by the facility operator in consultation with the Resident Engineer, and posting over the excavated trenches and shall temporarily remove all equipment debris and workers, and relocate barricades in order to open the full width of street to traffic during non-working hours, as required based on DOT requirements. Con Edison forces will perform all live gas main connections, dead gas main cut-outs, and/or service work associated with disconnecting and reconnecting from old to new gas main The Contractor shall then, at no additional cost, relocate such barricades barrels, cones and other warning devices and remove steel plates, as and when directed by the facility operator in consultation with the Resident Engineer to facilitate the installation of the new gas facilities. When work is being performed and the excavations are not covered with steel plates, the Contractor shall provide complete and safe access to the trench as may be required, and shall provide construction barricades and maintain traffic at all times as shown or as directed by the facility operator in consultation with the Resident Engineer. The contractor has the responsibility to maintain and set to grade all Con Edison hardware during backfill and pavement restoration. Upon completion of installation of the new gas facility, the trench excavation shall be backfilled by the contractor in accordance with Contract requirements and all backfill material shall conform to contract specifications for such purpose.

Pavement and Sidewalk Restoration - After backfilling is completed, the contractor shall install temporary pavement consisting of six inches (6") thick asphaltic concrete mixture in roadway areas or a two inches (2") thick asphaltic concrete mixture in sidewalk areas in order to maintain existing pedestrian and vehicular traffic. This temporary pavement shall be maintained until permanent replacement as specified in contract. Permanent pavement restoration shall be as required by the appropriate contract specifications and as directed by the Resident Engineer.

4. Method of Measurement:

The quantity to be measured for payment shall be the number of cubic yards (C.Y.) of trench actually excavated, including roadway pavement, base and/or sidewalk concrete removed within the limits of the trench as directed by the Resident Engineer in consultation with the facility operator. The volume occupied by existing pipes or other structures will be deducted from the total volume measured as shown on contract drawing(s) Title: EP-7 SECT. 6.09 GAS SPECIALTY CONTRACTOR WORK, or as encountered based on existing field conditions.

5. Price to Cover:

The unit price bid per cubic yard for excavation shall include the cost of all supervision, labor, material, equipment, insurance and incidentals necessary to complete excavation trenches, including backfill, compaction testing and restoration of trenches and tie-ins pits as specified or shown on the contract, plans. The bid price shall also include the cost of coordinating the sewer and water main work to be performed by the contractor with the gas installation work to be performed by others. The price shall also include, associated maintenance of traffic, and traffic plates and openings and closings of plates as may be required in order to provide access to the facility operator during the new gas facility installation, and installing, removing and maintaining tight sheeting that may be required, cut, break and remove various thickness of surface and base pavement, excavate by hand, furnish, place and compact, in compliance with DOT requirements, clean sand backfill following installation of the gas facility. Any required removing, trucking, storing, and disposing of material shall be deemed included in the unit price. The price shall also include the cost of providing temporary pavement restoration. Permanent pavement restoration shall be deemed included in this item, as required and as directed by the Resident Engineer.

GAS COST SHARING STANDARD SPECIFICATIONS
SCHEDULE GCS-A

Average rate charged by utility companies to Disconnect and Reconnect Gas Services:

1. National Grid - $586.90 per Service/and Visit
2. Con Edison - $524.00 per Service/and Visit

IV - STANDARD SKETCHES; GAS COST SHARING WORK

Hereinafter attached are the following Standard Sketches for Gas Cost Sharing Work:

Sketch No. 1 - Support Requirements For Gas Mains And Services Crossing Excavation Greater Than 4' - 0" Wide At Any Angle

Sketch No. 1A - Support Requirements For Gas Mains Over 16" Diameter Up To And Including 48" Diameter Crossing Excavation At Any Angle

Sketch No. 2 - Typical Methods Of Measurement For Gas Crossings

Sketch No. 3 - Utility Crossings During Catch Basin Chute Connection Pipe Installation

Sketch No. 4 - Utility Crossings During Catch Basin Chute Connection Pipe Installation (Extra Depth)

Sketch No. 5 - Gas Main Encroachment On And/Or Parallel To Excavation Of Unsheeted Trench

GAS COST SHARING WORK (SKETCH NO. 1)

SUPPORT REQUIREMENTS FOR GAS MAINS AND SERVICES CROSSING EXCAVATION GREATER THAN 4'-0" WIDE AT ANY ANGLE

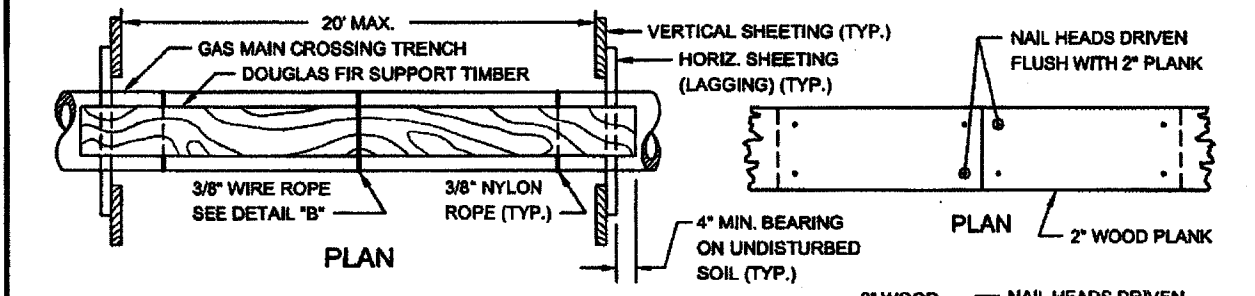

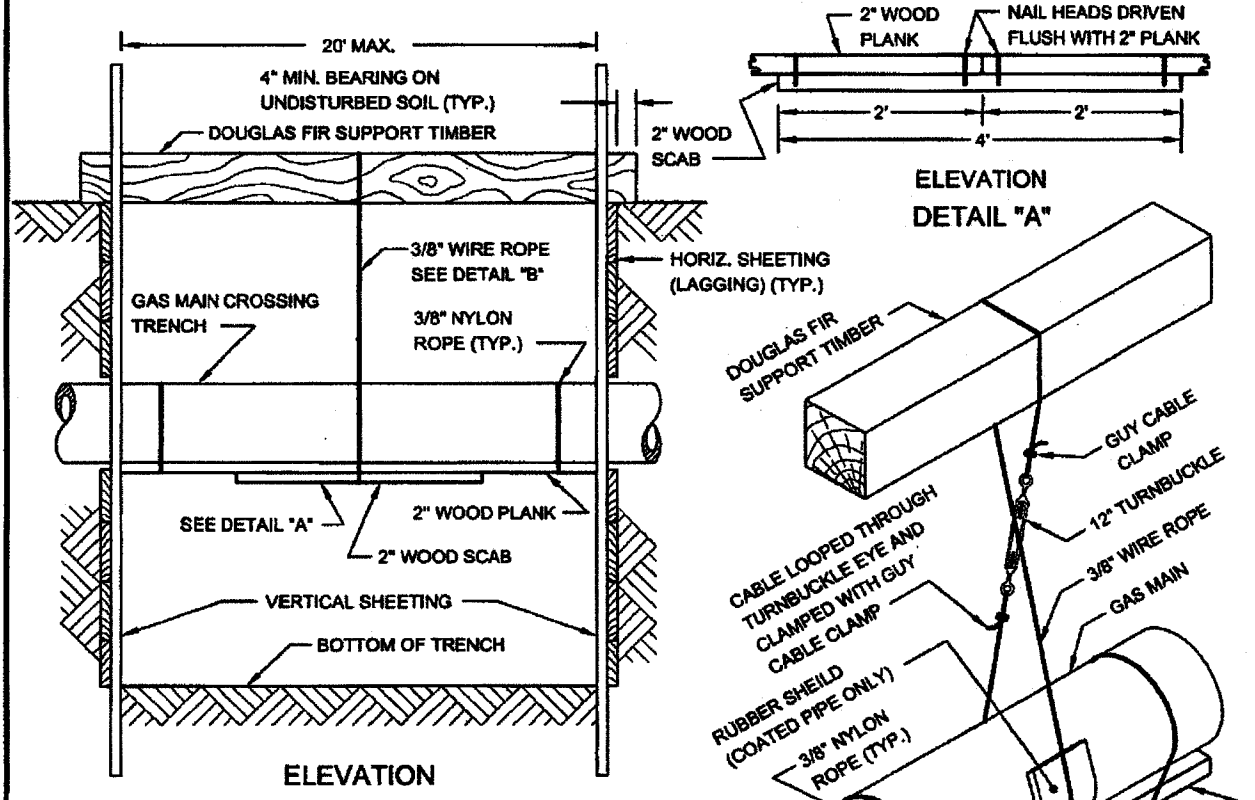

CABLE SUPPORT		TIMBER SUPPORT	
MAIN TYPE	SPACING	MAIN SIZE	TIMBER SIZE
CAST IRON	4' O.C. MAX.	UP TO 6"	6" X 6"
STEEL	10' O.C. MAX.	8" TO 10"	8" X 8"
PLASTIC	10' O.C. MAX.	12" TO 16"	10" X 10"

REVISED OCT. 2004 - J. ADRIEN
REVISED JUNE 1998 - J. HONG / W. PATALANOP. MOY

GAS COST SHARING WORK (SKETCH NO. 1A)

SUPPORT REQUIREMENTS FOR GAS MAINS OVER 16" DIAMETER UP TO AND INCLUDING 48" DIAMETER CROSSING EXCAVATION AT ANY ANGLE

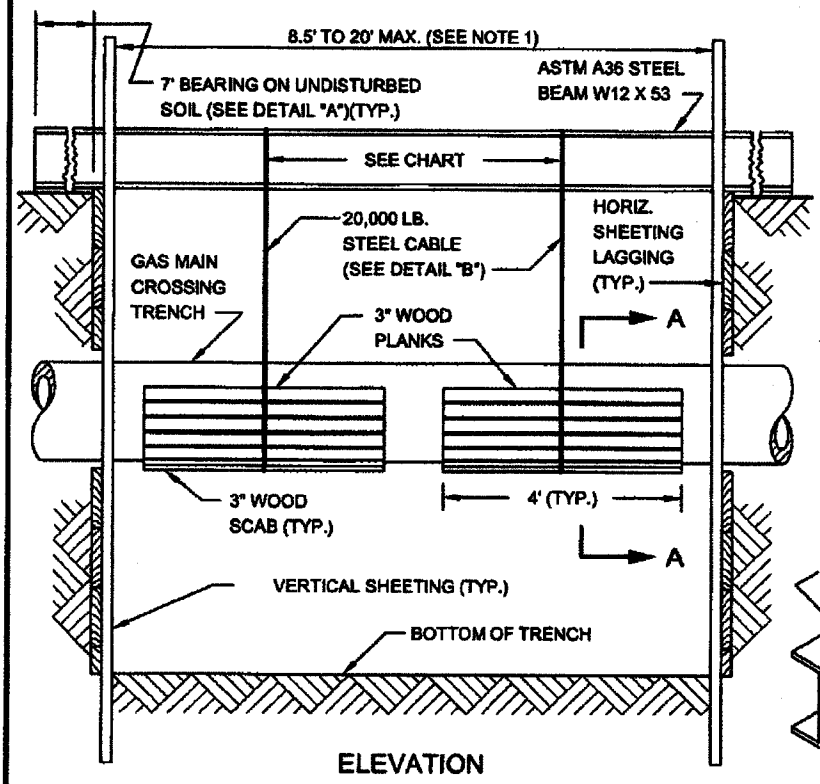

ELEVATION

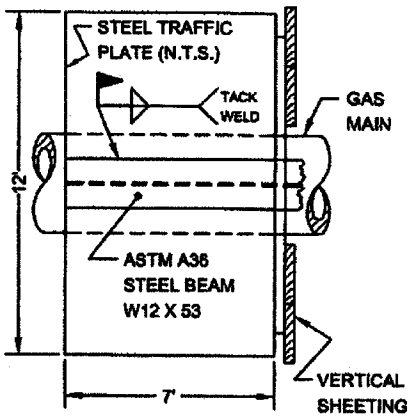

DETAIL "A"

CABLE SUPPORT	
MAIN TYPE	SPACING
CAST IRON	4' O.C. MAX.
STEEL	10' O.C. MAX.

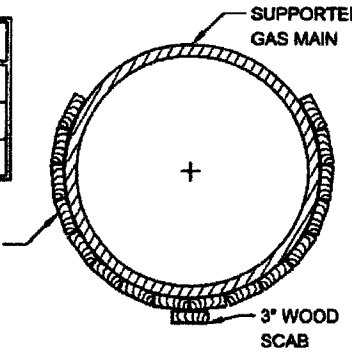

SECTION A-A

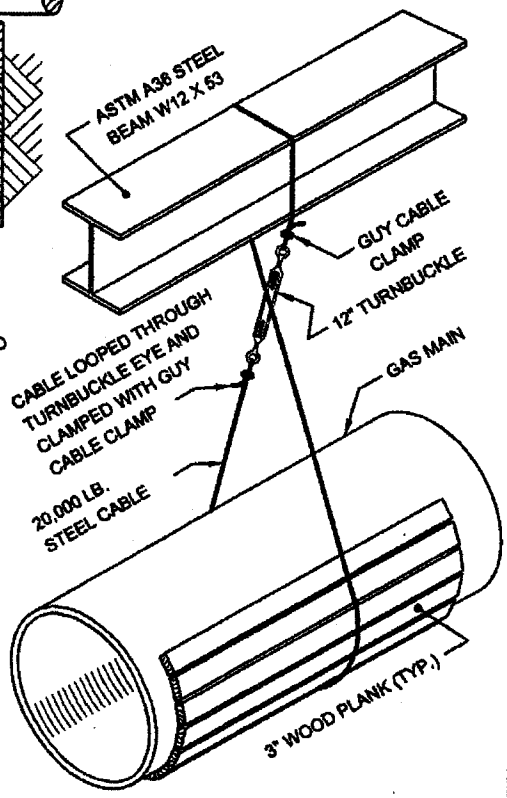

DETAIL "B"

NOTES:

(1) NO SUPPORT IS REQUIRED FOR GAS MAINS OVER 16" DIA. UP TO AND INCLUDING 48" DIA. CROSSING TRENCHES LESS THAN 8.5' WIDE.

(2) UNDERMINE A MAXIMUM OF 8.5 L.F. OF CAST IRON GAS MAIN AT A TIME.

(3) SET STEEL CABLE OVER 3" WOOD PROTECTIVE PLANKS AND PLACE AN ADDITIONAL 3" SCAB ON THE BOTTOM OF THE GAS MAIN.

(4) ADJUST STEEL CABLE UNTIL DEAD WEIGHT OF THE UNDERMINED GAS MAIN HAS BEEN TAKEN UP BY THE OVERHEAD STEEL BEAM SUPPORT.

(5) ALL SUPPORTS AND STEEL CABLES CAN BE REMOVED ONLY AFTER THE REQUIRED BACKFILL (AROUND AND BELOW GAS MAIN) HAS BEEN COMPACTED IN ACCORDANCE WITH NEW YORK CITY STANDARDS AND AT THE DIRECTIONS OF THE ENGINEER.

REVISED OCT. 2004 - L. ADRIEN
REVISED JUNE 1998 - J. WONG / W. PATALANOP, MOY

GAS COST SHARING WORK (SKETCH NO. 2)

TYPICAL METHODS OF MEASUREMENT FOR GAS CROSSINGS

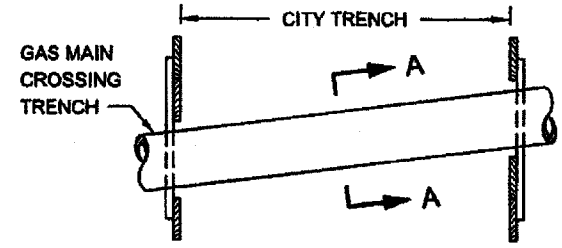

SINGLE FACILITY CROSSING

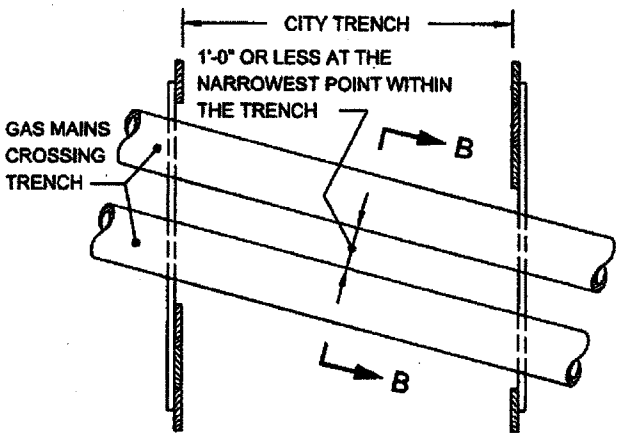

MULTIPLE FACILITIES
(GAS MAINS AT SAME ELEVATION)

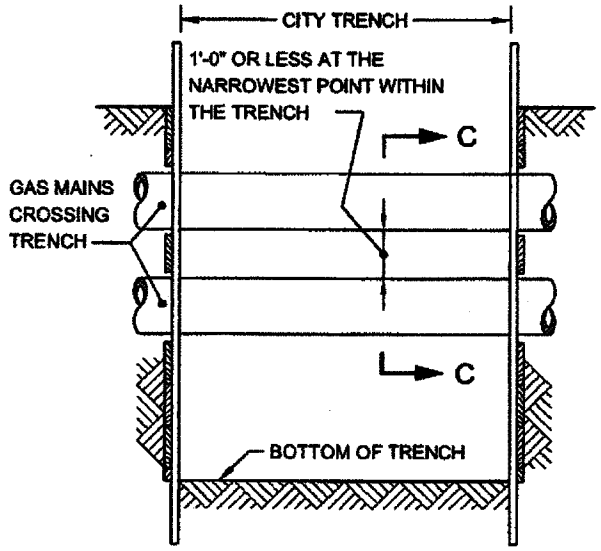

MULTIPLE FACILITIES
(ONE CROSSING AT DIFFERENT ELEVATIONS)

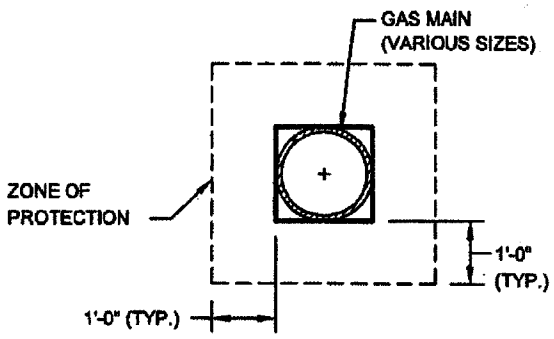

SECTION A-A

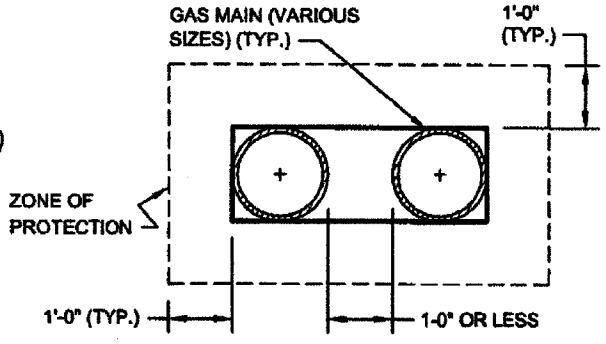

SECTION B-B

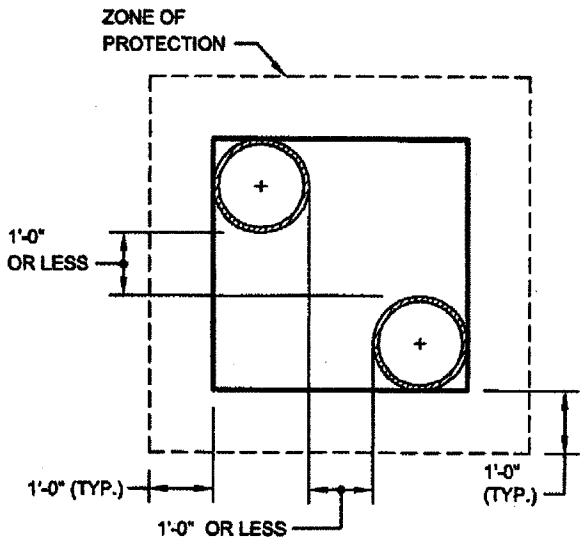

SECTION C-C

NOTE:

GAS MAINS MAY OR MAY NOT BE PARALLEL TO EACH OTHER.

REVISED SEPT. 2004 - L. ADRIEN
REVISED SEPT. 2004 - J. WONGIW. PATALANOIP. MOY

GAS COST SHARING WORK (SKETCH NO. 3)

UTILITY CROSSINGS DURING CATCH BASIN CHUTE CONNECTION PIPE INSTALLATION

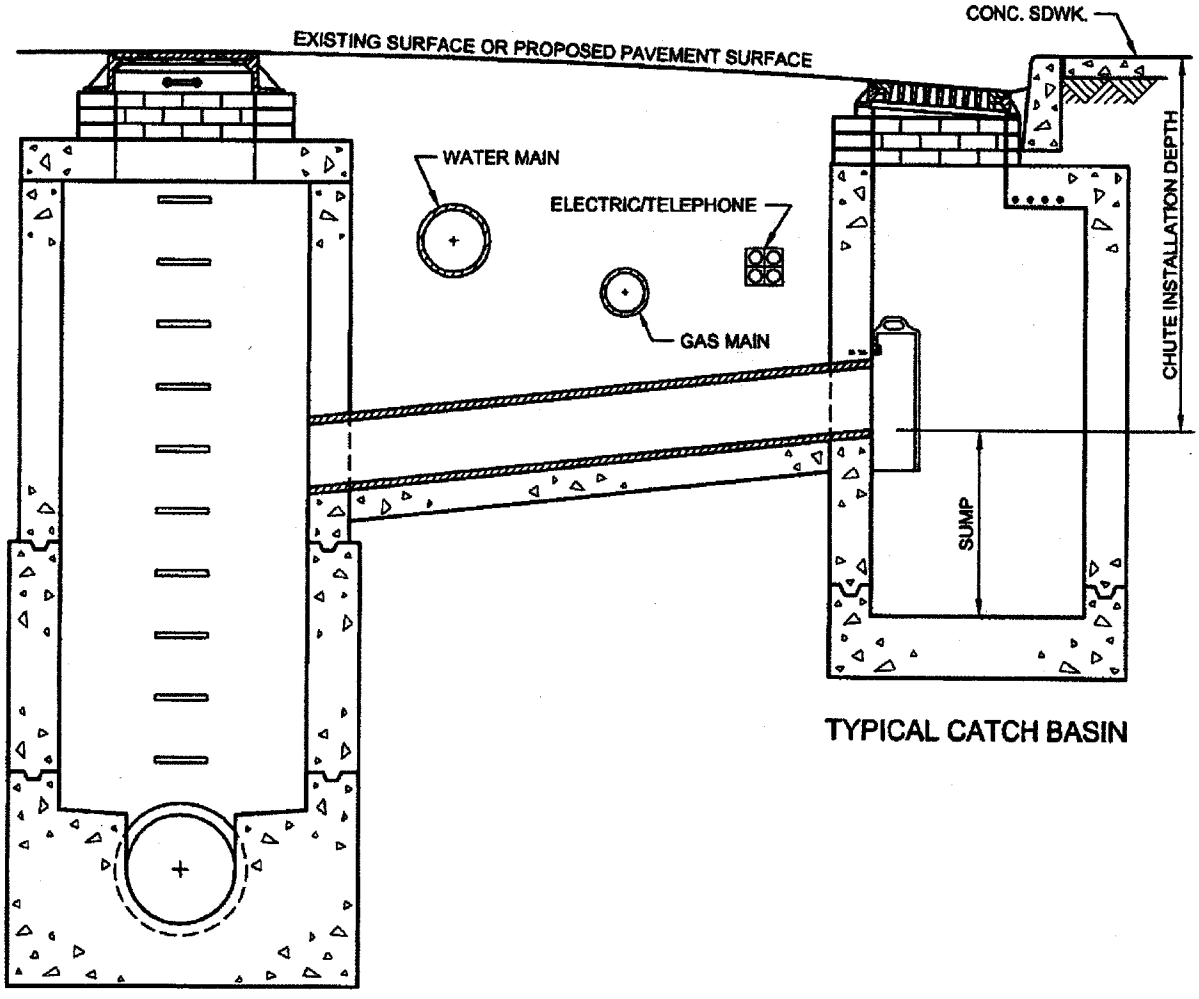

TYPICAL CATCH BASIN

TYPICAL SEWER MANHOLE

REVISED OCT. 2004 - I. ADRIEN
REVISED OCT. 1998 - J. WONG/W. PATALANO/P. MOY

GAS COST SHARING WORK (SKETCH NO. 4)

UTILITY CROSSINGS DURING CATCH BASIN CHUTE CONNECTION PIPE INSTALLATION (EXTRA DEPTH)

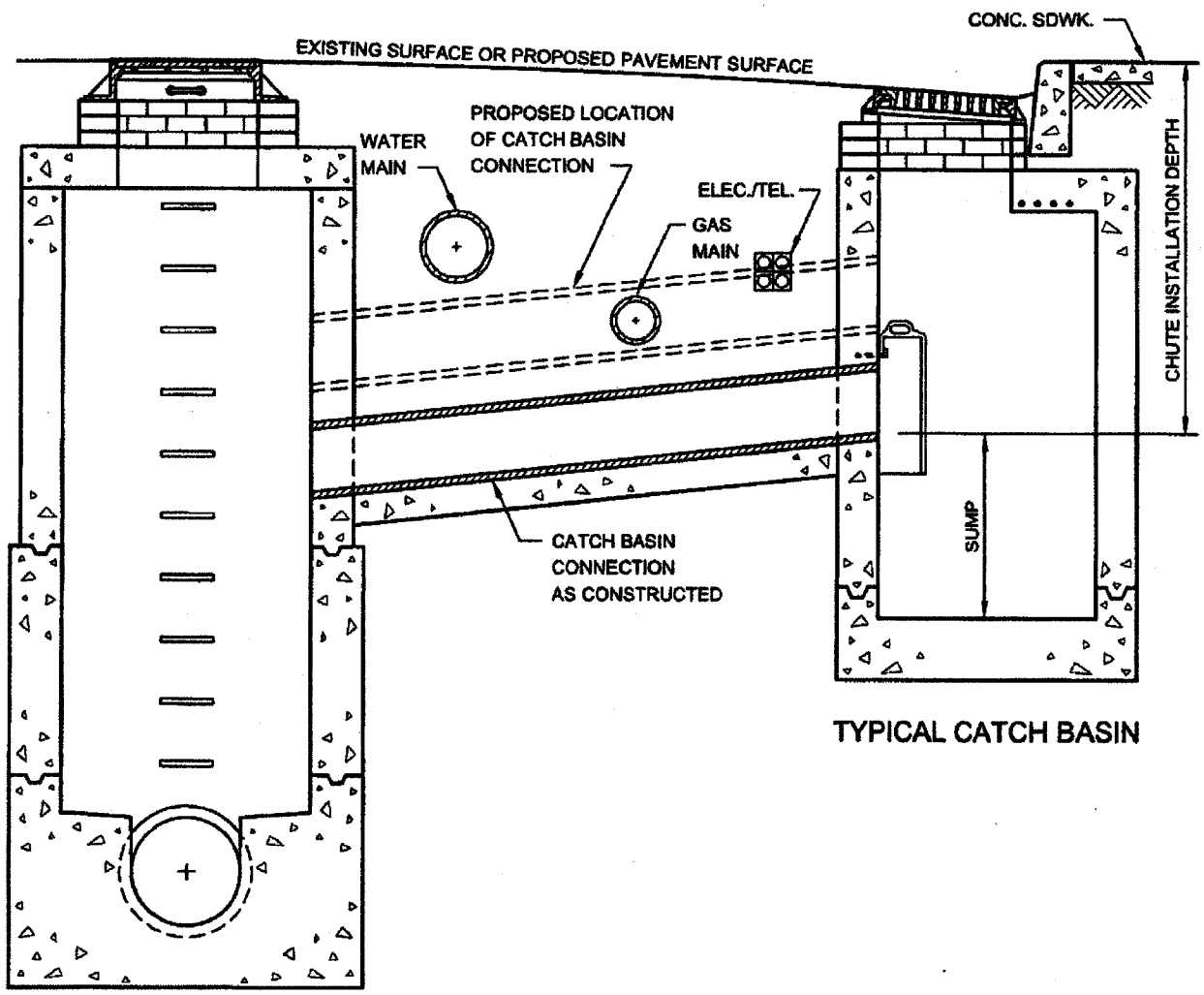

TYPICAL CATCH BASIN

TYPICAL SEWER MANHOLE

REVISED OCT. 2004 - L. ADRIEN
REVISED OCT. 1998 - J. WONG/W. PATALANO/P. MOY

GAS COST SHARING WORK (SKETCH NO. 5)

GAS MAIN ENCROACHMENT ON AND/OR PARALLEL TO EXCAVATION OF UNSHEETED TRENCH

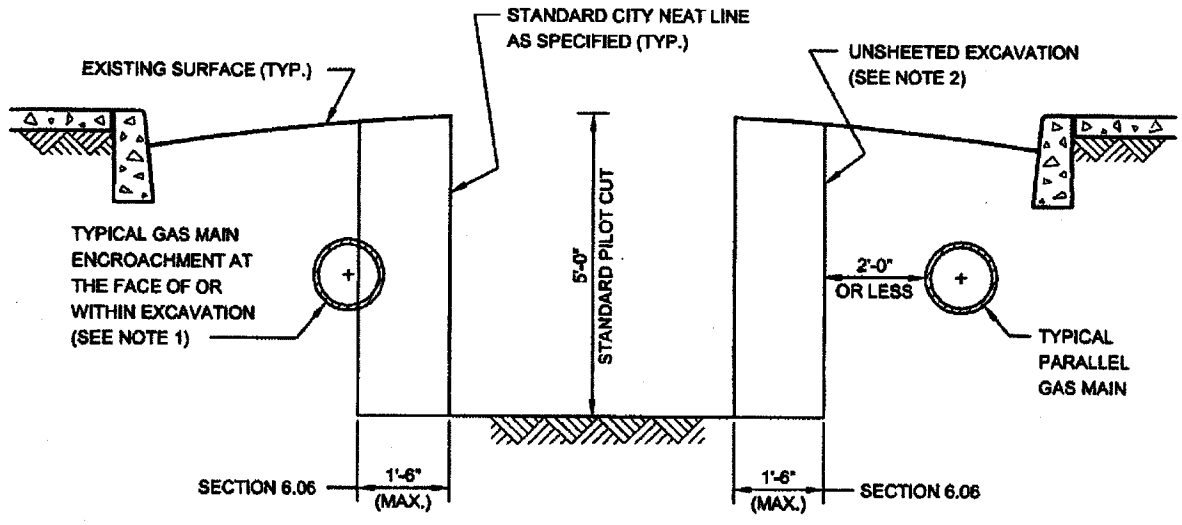

NOTES:

(1) GAS MAIN LOCATED AS SHOWN MAY HAVE TO BE REMOVED BY THE FACILITY OPERATOR PRIOR TO THE START OF CITY EXCAVATION, OTHERWISE, THE CONTRACTOR WILL BE PAID UNDER SECTION 6.06 FOR THE SAID WORK. IF GAS MAIN IS ABANDONED THEN SECTION 6.03 SHALL APPLY.

(2) EIGHTEEN (18) INCHES FROM STANDARD NEAT LINE IS THE MAXIMUM ALLOWABLE WIDTH OF AREA THAT MAY BE DISTURBED OR EXCAVATED DURING INSTALLATION OF CERTAIN TYPES OF SHEETING SYSTEMS THAT MEET THE REQUIREMENTS OF THE STANDARD SPECIFICATIONS OF THE DEPARTMENT OF DESIGN AND CONSTRUCTION OF THE CITY OF NEW YORK.

REVISED OCT. 2004 - L. ADRIEN
REVISED OCT. 1998 - J. WONG/W. PATALANOP. MOY

V - PRELIMINARY GAS WORK TO BE PERFORMED BY FACILITY OPERATOR

APPLICABLE TO ALL GAS DRAWINGS:

- ALL RELOCATION WORK SHOWN IN THIS SECTION IS TO BE PERFORMED BY FACILITY OPERATOR.
- ALL SUPPORT AND PROTECTION WORK IS TO BE PERFORMED BY CITY CONTRACTOR.
- IF ADDITIONAL INFORMATION IS NEEDED REGARDING THE FACILITY OPERATOR RELOCATION WORK, THE CONTRACTOR IS ADVISED TO CONTACT THE GAS COMPANY REPRESENTATIVE:

MR. NEVILLE JACOBS
NATIONAL GRID
287 MASPETH AVENUE
BROOKLYN, NY 11211
TEL.: 718-963-5612

(NO TEXT IN THIS AREA, TURN PAGE)

VI - LISTING OF APPROXIMATE LOCATIONS OF EP-7 BID ITEMS QUANTITIES

(NO TEXT IN THIS AREA, TURN PAGE)

SCOPE OF WORK
SUPPORT AND PROTECTION
FOR CONTRACT NUMBER GCJA03-2B

The City of New York Department of Design and Construction is planning to install sewers and/or water mains and all appurtenances in various locations in The City of New York along with all work incidental thereto.

6.03 - Removal Of Abandoned Gas Facilities. All Sizes (L.F.)

2,100 in Various Locations As Required

6.03.1 - Removal Of Abandoned Gas Facilities With Possible Coal Tar Wrap. All Sizes. (For National Grid Work Only) (L.F.)

800 in Various Locations As Required

6.04 - Adjust Hardware To Grade Using Spacer Rings / Adaptor (Street Repaving) (Ea.)

240 in Various Locations As Required

6.05 - Adjust Hardware To Grade By Resetting (Road Reconstruction) (Ea.)

250 in Various Locations As Required

6.06 - Special Care Excavation & Backfilling (C.Y.)

4,500 CY In Various Locations As Required, Including But Not Limited To All Gas Services Crossing Unsheeted Water Main Trenches.

6.07 - Test Pits For Gas Facilities (C.Y.)

300 CY in Various Locations As Required.

END OF EP-7 PAGES

THE EP-7 PAGES CONSIST OF FORTY (40) PAGES, INCLUDING THIS PAGE.

U - PAGES

SECTION U (VERSION 2.0)

NOTICE

THE PAGES CONTAINED IN THIS SECTION U VERSION 2.0 (U-PAGES) REPRESENT ADDITIONAL CONTRACT REQUIREMENTS APPLYING TO WORK PERFORMED IN THE PRESENCE OF PRIVATELY OWNED UTILITY FACILITITIES.

(NO TEXT ON THIS PAGE)

SECTION U (VERSION 2.0)

DATED: August 03, 2018

1. The Contractor shall be responsible for compliance with all the provisions of the following Sections and Schedules, which are hereby made a part of the original contract documents:

   A. "SECTION U: Additional Contract Requirements Applying to Work Performed in the Presence of Privately Owned Utility Facilities" (Pages U-3 through U-13)

   B. Schedule U-1 (Page U-15)

   C. Schedule U-2 listing scope of utility interferences is no longer included in City contract. Such information will be part of Interference Agreement between Utility Operator and the Contractor.

   D. Schedule U-3 Page U-16 (as per the Private Utilities reference document for SECTION U called "CET SPECIFICATIONS AND SKETCHES", dated November 2010).

2. Each facility operator shall provide inspectors at the work site to inspect methods of interference work, verify quantities and items of Utility Work, and coordinate all phases of the facility operator operations.

3. In addition, the following statements are made to provide clarification of various paragraphs under Section U:

   A. Section U, Paragraph 3, requires the Contractor to immediately commence negotiations with each Company for an Interference Agreement under which the Company will compensate the Contractor for any Interference Work which the Company does not elect to perform with its own forces or by specialty contractors retained by the Company. Thus the Contractor is on notice that its work under the Contract may be affected by Interference Work performed by (a) the Contractor pursuant to a separate Interference Agreement with the Company, (b) the Company, or (c) partly by each.

B. The City has no contract with any of the Companies for work on or adjacent to the site of work under this Contract, and the Companies are not "Other Contractors" as defined for the purposes of this Contract. The Contractor is reminded, however, that pursuant to Section U, Paragraph 3, the City will not compensate the Contractor for any direct and/or indirect costs related to Interference Work, regardless of whether such Interference Work is covered by an Interference Agreement between the Contractor and the Company or is performed by the Company using its own forces or by specialty contractors retained by the Company.

C. Section U, Paragraph 13, provides that the provisions of Section U are material provisions of the Contract and that the Contractor's failure to comply with the procedures set forth in Section U are sufficient for the Commissioner to declare the Contractor in default pursuant to Article 48 of the Contract.

Pursuant to this Section, the Contractor is informed that the Performance Bond required of the Contractor pursuant to the Contract is not deemed to guarantee performance of any of the Interference Work.

Section U: Additional Contract Requirements Applicable to Work Performed in the Presence of Privately Owned Utility Facilities

The Contractor is hereby notified that pursuant to the law and franchise agreements issued by the City, certain private utility and public service companies named in Schedule U-1 ("the Companies") own and/or operate surface and/or subsurface facilities within the limits of this contract. The existence of these facilities impacts the productivity of the City work called for in the contract. In order to improve coordination of the City construction with the private utility facilities owned and/or operated by the Companies named in Schedule U-1, Article 1.06.30 of the Standard Highway Specifications of the New York City Department of Transportation, Dated August 1, 2015; and/or Articles 10.15 through 10.18 of the Standard Sewer and Water Main Specifications of the New York City Department of Environmental Protection, Dated July 1, 2014; as applicable, are amended and will be implemented as follows:

1. ***Means and methods for City work***:

   a) The Contractor is hereby notified that the utility interferences may impact the performance of, and/or interferes with, City work. The Contractor will be required to perform such utility work as directed by the Resident Engineer in order to clear all utility interferences from the project site as required for satisfactory completion of City work within specified contract schedule.

   b) In areas serviced by overhead lines on poles carrying electric, telecommunication and cable system, the Contractor understands and by bidding for this contract agrees that he/she will be required to perform the public work in the presence of energized electrical overhead lines and appurtenances located in areas adjacent and/or within the project area. As a consequence he/she will select means and method of construction appropriate to maintain the safety clearances required or as permitted by electric operators in order to avoid damaging the insulation or shielding of these lines and also to prevent knocking them down.

2. Field inspection prior to construction:

Prior to the start of any contract work in areas serviced by overhead electric lines, and after the award to the apparent low bidder for this contract, the Contractor must request a field walk of the project area along with the operator of the overhead electrical facilities and the DDC Engineer-In-Charge. At that time the facility operator will confirm the type and condition of the overhead electrical lines and the sufficiency of their insulating properties with respect to the means and methods proposed by the Contractor. The Contractor must be prepared to describe in enough details his/her proposed means and methods of construction operations in order to anticipate the likelihood that electric lines insulation would be cut or otherwise compromised. Also such details will allow the facility operator to anticipate the need for added insulation and/or shielding of non-insulated lines.

3. Compensation for interference work:

Compensation for Interference Work is a matter of adjustment between the Contractor and each private utility company located within the limits of the project area and whose utility facilities are affected by City contract work. In particular, the City will not compensate the Contractor for any direct and/or indirect costs related to Interference Work, including, but not limited to, delay, lost profit, increased overhead, or any other impact costs. Upon receipt of a Notice of Award from the City, the Contractor shall immediately commence negotiations with each of the Companies concerning the manner in which and the price for which the Contractor, through its own forces or by others hired by it, will perform and be paid by the Company for all necessary Interference Work as defined above, and at known locations of City contract work, that the Company(ies) choose(s) not to perform with its(their) own forces or by specialty contractors hired by it (them) (as per "Interference Agreement"). Specialty contractors' work is limited to (i) insulation installation and removal, (ii) live gas and steam work, (iii) cleanup and disposal of hazardous materials, (iv) splicing live electrical and telecommunications facilities, and (v) work not traditionally performed by general construction contractors.

4. Interference Agreement:

a) Although the parties may negotiate an Interference Agreement in any format or manner they deem fit, the Contractor is hereby advised that the Companies have indicated to the City that they will agree to compensate the Contractor on a unit price basis for Types of Interferences encountered on this Contract in accordance to the Private Utilities reference document for SECTION U called "CET SPECIFICATIONS AND SKETCHES", dated November 2010, copy of which is available on demand.

b) The Contractor shall notify the City upon concluding an Interference Agreement with each of the Companies.

5. City contract work to continue without Interference Agreement :

If, prior to the start of construction, as directed by the City's Order to work / Notice To Proceed (OTW/ NTP) date any of the Companies and the Contractor have not concluded an Interference Agreement as described above, then the City shall issue a written "48 Hours' notice to Public Corporation" as prescribed by the City of New York Administrative Code, commonly referred to as "Order-Outs" and City construction will proceed as ordered and the Contractor will be directed by the Resident Engineer (RE) to perform the City work on Time, Material and Equipment basis (T&M) as specified in standard City contract agreement Article 26.2. T&M records will include identification of types of utility facilities interfering with City work, utility facility owners, specifying the nature and quantity of any materials, plant and equipment furnished or used in connection with the performance of such work and crew size, such as: name and number of each worker employed on such work. T&M records will also indicate the hours of active time, standby time and idle time. The Company (ies) and the Contractor will maintain separate records of the actual quantity and cost of labor, materials, and equipment expended, and will provide copies of this information to the other party on a daily basis for reconciliation. These T&M records along with cost evaluations will be submitted daily to the Resident Engineer for review and approval. The total cost of City work will be based on quantity of work performed multiplied by unit price contract bid items. The total interference cost will be calculated as the difference between the total T&M cost and total cost for City work.

The Resident Engineer will conduct a monthly reconciliation session of the daily T&M records with the affected Company (ies) and the Contractor. If the Contractor and affected utility companies cannot reconcile their T&M records, by the last day of each month, then the Resident Engineer will submit the approved City's T&M records along with total cost evaluations to the DDC Director of Construction who will review these records and recommend approval and validity certification by the DDC Construction Assistant Commissioner.

a) Copies of the DDC approved and certified T&M records will then be transmitted by the DDC to the Contractor and the utility companies. These certified records may be used by the Contractor for compensation claims against the responsible private facility owners, or may be used by any party as supporting documentation in dispute regarding compensation for performing Interference Work. The Contractor will be required to perform City work while invoices are submitted by the Contractor to the Utility companies for payment within 30 days, or while compensation disputes between the Contractor and affected company (ies) are submitted to Binding Arbitration process described in Paragraph 9.

b) All issues related to utility work and/or delays due to compensation disputes or claims against utility companies are not allowable as justification for granting contract time extensions or delay claims against the City. The City may assess liquidated damages specified in the contract for net overall delays suffered by City contract work as a result of utility issues, disputes and claims.

c) The standard City contract dispute resolution process specified in Article 27 "Presentation of disputes to Commissioner", of the standard City contract agreement is not applicable to any disputes related to utility work and/or compensation for such work or claim against utility companies. Utility work issues, disputes and claims may only be submitted to Binding Arbitration process described in Paragraph 9.

d) The Contractor will notify the Resident Engineer when utility work that require the intervention of company utility specialty crews causes excessive contractor's labor and equipment standby or idleness and, thereby jeopardizing the City project

schedule. The Resident Engineer will submit the facts to the DDC Director of Construction who will recommend to the DDC Deputy Commissioner regarding the issuance of a "48 Hours' notice to Public Corporation" to the concerned utility company as authorized by the New York City Administrative Code Section 19-143 and/or Section 24-521 as applicable.

e) Utility delays caused by utility and/or by unavailability of utility specialty crews cannot be discounted for earning any contractual bonus when such bonus clause is included in a contract. However, if such specified bonus is not earned or is disallowed by the City or if the City assesses specified liquidated damages as a result of such excessive delays, the Contractor may seek damages from the responsible utility company (ies).

6. Extra utility work with Interference Agreement:

If during construction the Contractor encounters utility facilities interferences or utility scope of work that it believes is not covered by the Interference Agreement as described above, then the Contractor shall immediately notify the Company in writing, with a copy to the City, describing the nature and location of the extra work in question. The Company then has five (5) business days to investigate the conditions and then:

a) Advise the Contractor and the City in writing that no interference with its facilities exists at the location in question, and hence that the Contractor may proceed with City work without providing for any impact from Company facilities;

b) Advise the Contractor and the City in writing that the Interference Agreement negotiated pursuant to Paragraph 4, provides for the scope of work encountered.

c) Advise the Contractor and the City in writing that it intends to perform the necessary utility Work with company forces or with its own contractor including, but not limited to, relocating its facility out of the way of the proposed City work. In this case, the Company shall provide a written schedule for the performance of the utility work it proposes to perform, which shall be subject to approval by the City based on its impact to the Contractor's currently approved progress schedule. Upon approval of the Company's schedule by the City, the Contractor

shall provide access to the worksite to the Company and/or any contractors hired by it to perform this utility work. If necessary, the City may grant a contract time extension for delays caused by the performance of such utility work by the company.

d) Reasonably specify in writing the scope of work to be performed by the Contractor on behalf of the Company that is not covered under the Interference Agreement negotiated pursuant to Paragraph 5, including, but not limited to, relocating, supporting, and/or protecting the Company's facilities, and/or shifting the City facility if approved by the Resident Engineer, and/or otherwise changing its operations to work in the presence of the Company's facilities. Should the Company elect this option, it must adequately define and provide an initial price offer for the work required to be performed.

7. Means and Methods for utility work:

Upon receipt of the Company's determination pursuant to Paragraphs 6.b, or 6.d, above, the Contractor shall determine reasonable means and methods of performing the work defined by the Company. These means and methods are subject to approval of the Company, which shall not be unreasonably withheld. If, however, the Company objects to the Contractor's proposed means and methods then it shall define an alternate method of construction. Upon receipt of the Company's approval or its proposed alternate method of construction, the Contractor shall commence performance of the work defined by the Company as soon as possible, and shall perform the work in a good, workmanlike, and efficient manner, using the means and methods approved by the Company, in order to permit the City work to proceed in the most expeditious manner possible, but without imposing unreasonable and/or unnecessary costs on the Company. It is expressly understood by all parties that the City's rights pursuant to Article 4 of the Contract apply to Utility Work performed pursuant to this Section.

8. Disputed utility work covered by an interference agreement:

The City Work will continue as described in Paragraph 5 above. In the event of any dispute between the Company (ies) and the Contractor regarding any issue related to the

performance of, or payment for, utility work, including, but not limited to, any indirect or impact costs incurred by the Contractor due to the Utility Work and/or to the existence of facilities owned or operated by the Company (ies) on the line of the work. The Company (ies) and the Contractor hereby agree to submit to each other a "Final Offer," in writing, by certified mail. Each party shall then have three business days to consider each other's Final Offer. In the event that neither party accepts the other's Final Offer within those three days, the Company (ies) and the Contractor agree to immediately submit the dispute to binding arbitration as described in Paragraph 9. During the pendency of any arbitration, the Company (ies) and the Contractor shall maintain separate records of the actual quantity and cost of labor, materials, and equipment expended, and to provide copies of this information to the other party on a daily basis for reconciliation. Any and all disagreement with the records maintained and provided by the other, must be documented in writing to all parties. However, these records are solely for the benefit of presentation to the arbitrator, whose decision may not necessarily be based on these records and in any event is final. Both parties should be aware that the City will not confirm or deny the accuracy of any records that is not certified by DDC.. While the arbitration is pending, the Company shall pay the Contractor on a monthly basis, based on the price offered by the Company to the Contractor for the performance of the work.

9. Arbitration of utility work:

The arbitration of the issues described above shall be conducted pursuant to the Construction Industry Arbitration Rules of the American Arbitration Association (hereinafter "the Rules" and "AAA") in effect on the date the arbitration is initiated except as set forth herein. The arbitration award shall be final and binding upon the parties to the arbitration and judgment upon the award may be entered in a court having jurisdiction.

(a) Once an arbitrator(s) has been appointed by the AAA, the arbitration shall be scheduled as promptly as possible given the arbitrator(s) and the parties' schedules.

(b) No later than seven days prior to the first arbitration hearing, Company and the Contractor shall submit to the arbitrator(s), and to each other, a summary of each party's respective position and such other information as is deemed appropriate, along with a copy of each party's Final Offer as specified in Paragraph 8.

(c) The arbitration shall be conducted and concluded in two days.

(d) On the morning of the first day of the arbitration, the Contractor and/or representatives shall have 3 ½ hours to make a presentation of its claim to the arbitrator. During its presentation, the Contractor shall not be permitted to produce any documents or cost records which have not already been provided to the Company. The Contractor shall be permitted to produce any analysis or description of its claim which has been prepared for the purpose of its presentation.

(e) Company and/or its representatives shall have two hours to ask the Contractor questions about its claim and its presentation. Thereafter the arbitrator(s) shall have two hours to ask the Contractor questions about its claim and its presentation.

(f) On the morning of the second day of the arbitration, Company and/or its representatives shall have 3 ½ hours to make a presentation of its claim to the arbitrator. During its presentation, the Company shall not be permitted to produce any documents or cost records which have not already been provided to the Contractor. The Company shall be permitted to produce any analysis or description of its claim which has been prepared for the purpose of its presentation.

(g) The Contractor and/or its representatives shall have two hours to ask Company questions about its claim and its presentation. Thereafter the arbitrator(s) shall have two hours to ask Company questions about its claim and its presentation.

(h) Subject to the above time limitations, the arbitrator(s) may conduct the arbitration in such manner as the arbitrator(s) deems reasonable.

(i) The arbitrator(s) shall then have one week to select in writing, as the arbitrator ('s) award, that party's Final Offer which appears to be more reasonable, based on the presentations at the arbitration hearings.

(j) The arbitrator shall have no discretion to grant an award other than one of the two Final Offers submitted by the parties.

(k) Any award for work that has already been performed shall be paid on the 7th day after receipt of the arbitrator's decision, or on the 30th day after completion of the work, whichever is later. Payment for work not yet completed at the time of the arbitrator's decision shall be paid within 30 days of completion of work. Interest shall accrue from the date payment is due at the rate of 9% per annum. Either party may

cause judgment to be entered in accordance with the arbitrator(s) decision in a court in the State of New York, County of New York.

(l) The arbitrator's fees and any other costs of the arbitration shall be initially shared equally by Company and the Contractor. The non-prevailing party shall then pay all arbitrator's fees and costs of the arbitration and shall reimburse the prevailing party for its share of such fees and costs theretofore paid.

(m) The parties may, at any time, settle any matter submitted to arbitration.

10. Order-out waiver:

The Contractor and all subcontractors hired by it, if an Interference Agreement is executed as specified between the concerned parties, agree to waive any rights they may have, if any, under law, contract or otherwise to compel the City to assert any right the City may have, including the issuance of any directives required under the New York City Administrative Code, Section 19-143 and Section 24-521, to require any or all of the Companies to maintain, repair, replace, protect, support, shift, alter, relocate, and/or remove utility facilities in connection with the work to be performed under this contract. However, nothing in this Section shall preclude the City from exercising its rights under the Law to issue such a directive to the Company.

11. Cost of insurance:

Each of the named Companies, at their option and if an Interference Agreement is executed as specified between the concerned parties, may be named as an additional insured on all insurance policies required to be maintained under this contract. In the event that a Company opts to be so named as an additional insured, the actual incremental cost, if any, to the Contractor of providing such insurance coverage shall be borne by that Company. The Contractor shall provide a written statement from its insurance provider documenting the actual cost of this added coverage to the Company. Under no circumstances shall the cost of insurance coverage on behalf of any Company be borne by the City. Nothing in this paragraph shall be interpreted to imply the City's acceptance of any additional responsibility or liability for any matter related to the performance of Utility Work. In particular, the Company and the Contractor bear joint and full responsibility to ensure that any Utility Work performed by the Contractor is in compliance with all applicable government and Company regulations.

12. Cost of utility interference work:

The Companies, by virtue of a prior agreement with the City, have agreed to perform their obligations described in this section. It is expressly understood that the cost of Utility Work or any delays cost caused by such utility work shall not be a charge against the City, but shall be a matter for adjustment between the Contractor and the Company or Companies concerned. The City and the Contractor agree that the Companies are third party beneficiaries of this Section of the contract, if an Interference Agreement is executed between the Contractor and utility company (ies). The provisions of this Section shall govern in all cases where Company property interferes with or is about to be disturbed by the City work, notwithstanding any other provision of the Contract, except for Natural Gas transmission/distribution facilities covered subject to the Gas Facility Cost Allocation Act (GFCAA) and covered separately in this contract.

13. Default declaration:

The Contractor agrees that the provisions of this Section are material provisions of the contract, and that the Contractor's failure to comply with the procedures set forth above are sufficient for the Commissioner to declare the Contractor in default pursuant to Article 48 of the Contract.

14. NYS Labor Law:

The Contractor is hereby advised that New York State Labor Law and/or, Davis-Bacon Act if federally funded, applies to public work. The work described in this Section U of the contract performed by utility company (ies) with their own forces or vendors hired by such company (ies) is not public work.

15. Facility operators:

The insurance requirements in Paragraph 11 of this Section U apply to: (i) additional Companies, if any, who were not named in Schedule "A" but which have executed an Interference Agreement with the Contractor for utility work; and (ii) additional coverage, if any, paid for by Utility Companies whose utility facilities are located within the project limits, that they may require for the utility work pursuant to an Interference Agreement between the Contractor and such utility company (ies).

[End]

"STANDARD UTILITY LETTER OF AGREEMENT"

(Name)
Deputy Commissioner, Infrastructure Division
Department of Design and Construction
30-30 Thomson Avenue
Long Island City, NY 11101

RE: City Work Performed in the Presence of Private Utility Facilities
Project No: _____

Dear (Name):

This letter is to certify that _____, has requested the inclusion of the attached "Section U: Additional contract requirements applying to work performed in the presence of privately owned utility." The company agrees to abide by the terms of this Section U at the company's own expenses due to their facilities interferences with the Public work.

Sincerely,

_____
By: Authorized Company Representative

_____
Title

NOTARY PUBLIC

CERTIFIED AS TO FORM
AND LEGAL AUTHORITY:

By:_____

SCHEDULE U-1

LISTING OF COMPANIES NAMED FOR THIS CONTRACT

COMPANY NAME	CONTACT NAME	CONTACT TELEPHONE
CON EDISON	O'NEIN WRIGHT	212-460-3878
CROWN CASTLE	WILLIAM POWELL	724-416-2954
CHARTER SPECTRUM	JOHN PIAZZA	718-888-4261

SCHEDULE U-3

(NO TEXT IN THIS SECTION)

CITY OF NEW YORK
DEPARTMENT OF DESIGN AND CONSTRUCTION
DIVISION OF INFRASTRUCTURE

ADDENDA CONTROL SHEET

BID OPENING DATE: **APRIL 01, 2019**

PROJECT NO.: **GCJA03-2B**

DESCRIPTION: **CONSTRUCTION OF RIGHT-OF-WAY GREEN INFRASTRUCTURE IN THE CSO TRIBUTARY AREA JAM-003 AND JAM-003A**

Addendum		Addendum Contains:				
No.	Date	Revised Bid Date/Time	Revised Bid Schedule	Questions & Responses	Additional Ammendments	Drawings (number)
1	03/12/2019	☐	☐	☐	☒	☐ (0)
		☐	☐	☐	☐	☐ (0)
		☐	☐	☐	☐	☐ (0)
		☐	☐	☐	☐	☐ (0)
		☐	☐	☐	☐	☐ (0)
		☐	☐	☐	☐	☐ (0)
		☐	☐	☐	☐	☐ (0)
		☐	☐	☐	☐	☐ (0)
		☐	☐	☐	☐	☐ (0)
		☐	☐	☐	☐	☐ (0)
		☐	☐	☐	☐	☐ (0)

The Table above is a guide. Refer to the referenced Addendum for specific information.

ATTACH TO CONTRACT DOCUMENTS
THE CITY OF NEW YORK
DEPARTMENT OF DESIGN AND CONSTRUCTION
INFRASTRUCTURE DIVISION
BUREAU OF DESIGN

PROJECT ID: GCJA03-2B
CONSTRUCTION OF RIGHT-OF-WAY
GREEN INFRASTRUCTURE IN THE CSO TRIBUTARY AREA
JAM-003 AND JAM-003A

Together With All Work Incidental Thereto
BOROUGH OF QUEENS
CITY OF NEW YORK
ADDENDUM NO. 1

DATED: March 12, 2019

THIS ADDENDUM IS HEREBY MADE A PART OF THE CONTRACT DOCUMENTS

1. **Refer** to the BID BOOKLET, VOLUME 1 OF 3; NOTICE TO BIDDERS;
   Delete NOTICE TO BIDDERS in their entirety;
   Substitute the attached revised NOTICE TO BIDDERS.

2. **Refer** to the BID BOOKLET, VOLUME 1 OF 3; LIST OF CONTRACT DRAWINGS (page A-2 through A7);
   Delete LIST OF CONTRACT DRAWINGS (page A-1 through A7) in their entirety;
   Substitute the attached revised LIST OF CONTRACT DRAWINGS (page A-2 through A13).

3. **Refer** to the BID BOOKLET, VOLUME 1 OF 3; LIST OF STANDARD DRAWINGS (page A-8 through A12);
   Delete LIST OF STANDARD DRAWINGS (page A-8 through A12) in their entirety;
   Substitute the attached revised LIST OF STANDARD DRAWINGS (page A-14 through A18).

4. **Refer** to the BID BOOKLET, VOLUME 2 OF 3, DDC SAFETY REQUIREMENTS FOR CONSTRUCTION CONTRACTS, (page 15 through 24);
   Delete DDC Safety Requirements in its entirety;
   Substitute the attached revised SAFETY REQUIREMENTS FOR CONSTRUCTION CONTRACTS (page 1 through 10).

5. **Refer** to the BID BOOKLET, VOLUME 3 OF 3, SCHEDULE A (page SA-5);
   Delete (page SA-5) in its entirety;
   Substitute the attached revised (page SA-5R).

6. **Refer** to the BID BOOKLET, VOLUME 3 OF 3, R-PAGES;
   Delete R-PAGES in its entirety;
   Substitute the attached revised R-PAGES.
   CHANGES MADE: Added SB 19-001

7. **Refer** to the BID BOOKLET, VOLUME 3 OF 3, GI-Pages (page GI-122 through GI-129);
   Delete (page GI-122 through GI-129) in their entirety;
   Substitute the attached revised (page GI-122R through GI-129R).

8. **Refer** to the BID BOOKLET, VOLUME 3 OF 3, S-Pages (page S-1);
   Delete (page S-1) in their entirety;
   Substitute the attached revised (page S-1R).

END OF ADDENDUM NO. 1

By signing in the space provided below, the bidder acknowledges receipt of this Addendum consisting of TWO (2) page, and FOURTY (40) pages of attachments.

THIS ADDENDUM MUST BE SIGNED BY ALL BIDDERS AND ATTACHED TO THEIR BID

for/ _____
MOHSEN ZARGARELAHI, P.E.
Associate Commissioner

PCI Industries Corp.
Name of Bidder

By: _____
Richard Persico, President & Chief Officer

Department of Design and Construction

INFRASTRUCTURE DIVISION
BUREAU OF DESIGN

VOLUME 3 OF 3

PROJECT ID: GCJA03-2B

CONSTRUCTION OF RIGHT-OF-WAY
GREEN INFRASTRUCTURE IN THE CSO TRIBUTARY AREA
JAM-003 AND JAM-003A

Together With All Work Incidental Thereto

BOROUGH OF QUEENS
CITY OF NEW YORK

_____

Contractor

_____

Dated_____, **20**___

_____