CITY OF NEW YORK
DEPARTMENT OF DESIGN AND CONSTRUCTION
DIVISION OF INFRASTRUCTURE
VOLUME 1 – BID BOOKLET

TABLE OF CONTENTS

Introduction 2

Bid Submission Requirements 3

Notices to Bidders 4

- Pre Bid Questions (PBQs) 4
- NYC Contract Financing Loan Fund 4

M/WBE Notice to Prospective Contractors 5

Affirmation 13

Bid Schedule 15

Pre-Award Process 17

Project References 19

- A. Contracts completed by the bidder 19
- B. Contracts currently under construction by the bidder 20
- C. Pending contracts not yet started by the bidder 21

Introduction

This Bid Booklet is intended to provide general information necessary for bidding on a DDC public works project and is part of the Contract Documents, as per Article 1.1 of the Standard Construction Contract.

As this contract is solicited via the PASSPort system, the bidder will be required to complete all of the PASSPort forms and questionnaires. These forms and questionnaires, along with the bidder's responses, will become part of the Bid Booklet.

Additional information on the PASSPort system can be found at the following website:
https://www1.nyc.gov/site/mocs/systems/passport-user-materials.page

Bid Submission Requirements

THE FOLLOWING MUST BE COMPLETED AND SUBMITTED FOR THE BID TO BE CONSIDERED RESPONSIVE:

1. Completed electronic bid submission in PASSPort;
    a. All required fields in PASSPort must be completed.
2. Bid security, if required.
    a. If Bid security is in a form of a bid bond, bidders must include it with their electronic PASSPort submission.
    b. If Bid security is in a form of a certified check, bidders must hand deliver the certified check.

BIDDERS ARE ADVISED THAT PAPER BID SUBMISSIONS WILL BE DEEMED NON-RESPONSIVE. BIDDERS MUST SUBMIT THEIR BIDS ELECTRONICALLY IN PASSPORT AND PROVIDE THE BID SECURITY FOR THE BID TO BE CONSIDERED RESPONSIVE.

THE FOLLOWING MAY RESULT IN THE BID BEING FOUND NON-RESPONSIVE:

1. Failure to upload required files or documents as part of a mandatory PASSPort Questionnaire response.
2. Uploading an incorrect file as part of a mandatory PASSPort Questionnaire response.

Notices to Bidders

Pre Bid Questions (PBQs)

Please be advised that PBQs must be submitted to the Agency Contact Person via PASSPort (in the RFx Discussions with buyer section) within the timeframe indicated in the PASSPort procurement.

NYC Contract Financing Loan Fund

If your business is working as a prime or subcontractor on a project with a City agency or City-funded entity, you may be eligible for a Contract Financing Loan from a participating lender coordinated with the NYC Department of Small Business Services (SBS). Loan repayment terms align with the contract payment schedule.

For more information: Call 311 or visit https://www1.nyc.gov/nycbusiness/article/contract-financing-loan-fund

M/WBE Notice to Prospective Contractors

PARTICIPATION BY MINORITY-OWNED AND WOMEN-OWNED BUSINESS ENTERPRISES IN CITY PROCUREMENT (9/2020 version)

ARTICLE I. M/WBE PROGRAM

Section 6-129 of the Administrative Code of the City of New York ("Section 6-129") establishes the program for participation in City procurement ("M/WBE Program") by minority-owned business enterprises ("MBEs") and women-owned business enterprises ("WBEs"), certified in accordance with Section 1304 of the New York City Charter. As stated in Section 6-129, the intent of the program is to address the impact of discrimination on the City's procurement process, and to promote the public interest in avoiding fraud and favoritism in the procurement process, increasing competition for City business, and lowering contract costs. The contract provisions contained herein are pursuant to Section 6-129, and the rules of the Department of Small Business Services ("DSBS") promulgated thereunder.

If this Contract is subject to the M/WBE Program established by Section 6-129, the specific requirements of MBE and/or WBE participation for this Contract are set forth in Schedule B of the Contract (entitled the "M/WBE Utilization Plan") and are detailed below. Contracts solicited through the Procurement and Sourcing Solutions Portal (PASSPort) will contain a Schedule B in the format outlined in the Schedule B – M/WBE Utilization Plan & PASSPort rider. The provisions of this notice will apply to contracts subject to the M/WBE Program established by Section 6-129 regardless of solicitation source.

The Contractor must comply with all applicable MBE and WBE requirements for this Contract.

All provisions of Section 6-129 are hereby incorporated in the Contract by reference and all terms used herein that are not defined herein shall have the meanings given such terms in Section 6-129.

References to MBEs or WBEs shall also include such businesses certified pursuant to the executive law where credit is required by section 311 of the New York City Charter or other provision of law.

Article I, Part A, below, sets forth provisions related to the participation goals for construction, standard and professional services contracts.

Article I, Part B, below, sets forth miscellaneous provisions related to the M/WBE Program.

PART A

PARTICIPATION GOALS FOR CONSTRUCTION, STANDARD

AND PROFESSIONAL SERVICES CONTRACTS OR TASK ORDERS

1. The **MBE and/or WBE Participation Goals** established for this Contract or Task Orders issued pursuant to this Contract, ("**Participation Goals**"), as applicable, are set forth on Schedule B, Part 1 to this Contract (see Page 1, Line 1 Total Participation Goals) or will be set forth on Schedule B, Part 1 to Task Orders issued pursuant to this Contract, as applicable.

The **Participation Goals** represent a percentage of the total dollar value of the Contract or Task Order, as applicable, that may be achieved by awarding subcontracts to firms certified with DSBS as MBEs and/or WBEs, and/or by crediting the participation of prime contractors and/or qualified joint ventures as provided in Section 3 below, unless the goals have been waived or modified by Agency in accordance with Section 6-129 and Part A, Sections 10 and 11 below, respectively.

2. If **Participation Goals** have been established for this Contract or Task Orders issued pursuant to this Contract, Contractor agrees or shall agree as a material term of the Contract that Contractor shall be subject to the **Participation Goals**, unless the goals are waived or modified by Agency in accordance with Section 6-129 and Part A, Sections 10 and 11 below, respectively.

3. If **Participation Goals** have been established for this Contract or Task Order issued pursuant to this Contract, a Contractor that is an MBE and/or WBE shall be permitted to count its own participation toward fulfillment of the relevant **Participation Goal**, provided that in accordance with Section 6-129 the value of Contractor's participation shall be determined by subtracting from the total value of the Contract or Task Order, as applicable, any amounts that the Contractor pays to direct subcontractors (as defined in Section 6-129(c)(13)), and provided further that a Contractor that is certified as both an MBE and a WBE may count its own participation either toward the goal for MBEs or the goal for WBEs, but not both.

A Contractor that is a qualified joint venture (as defined in Section 6-129(c)(30)) shall be permitted to count a percentage of its own participation toward fulfillment of the relevant **Participation Goal**. In accordance with Section 6-129, the value of Contractor's participation shall be determined by subtracting from the total value of the Contract or Task Order, as applicable, any amounts that Contractor pays to direct subcontractors, and then multiplying the remainder by the percentage to be applied to total profit to determine the amount to which an MBE or WBE is entitled pursuant to the joint venture agreement, provided that where a participant in a joint venture is certified as both an MBE and a WBE, such amount shall be counted either toward the goal for MBEs or the goal for WBEs, but not both.

4. A. If **Participation Goals** have been established for this Contract, a prospective contractor shall be required to submit with its bid or proposal, as applicable, a completed Schedule B, M/WBE Utilization Plan, Part 2 (see Pages1-2) indicating: (a) whether the contractor is an MBE or WBE, or qualified joint venture; (b) the percentage of work it intends to award to direct subcontractors; (c) in cases where the contractor intends to award direct subcontracts, a description of the type and dollar value of work designated for participation by MBEs and/or WBEs, and the time frames in which such work is scheduled to begin and end; as well as the name, addresses, and telephone numbers of the M/WBE subcontractors if required by the solicitation; and (d) the prospective contractor's required certification and affirmations. In the event that this M/WBE Utilization Plan indicates that the bidder or proposer, as applicable, does not intend to meet the **Participation Goals**, the bid or proposal, as applicable, shall be deemed non-responsive, unless Agency has granted the bidder or proposer, as applicable, a pre-award waiver of the **Participation Goals** in accordance with Section 6-129 and Part A, Section 10 below.

B. (i) If this Contract is for a master services agreement or other requirements type contract that will result in the issuance of Task Orders that will be individually registered ("Master Services Agreement") and is subject to M/WBE **Participation Goals**, a prospective contractor shall be required to submit with its bid or proposal, as applicable, a completed Schedule B, M/WBE Participation Requirements for Master Services Agreements That Will Require Individually Registered Task Orders, Part 2 (page 2) indicating the prospective contractor's certification and required affirmations to make all reasonable good faith efforts to meet participation goals established on each individual Task Order issued pursuant to this Contract, or if a partial waiver is obtained or such goals are modified by the Agency, to meet the modified **Participation Goals** by soliciting and obtaining the participation of certified MBE and/or WBE firms. In the event that the Schedule B indicates that the bidder or proposer, as applicable, does not intend to meet the **Participation Goals** that may be established on Task Orders issued pursuant to this Contract, the bid or proposal, as applicable, shall be deemed non-responsive.

(ii) **Participation Goals** on a Master Services Agreement will be established for individual Task Orders issued after the Master Services Agreement is awarded. If **Participation Goals** have been established on a Task Order, a contractor shall be required to submit a Schedule B – M/WBE Utilization Plan For Independently Registered Task Orders That Are Issued Pursuant to Master Services Agreements, Part 2 (see Pages 1-2) indicating: (a) whether the contractor is an MBE or WBE, or qualified joint venture; (b) the percentage of work it intends to award to direct subcontractors; (c) in cases where the contractor intends to award direct subcontracts, a description of the type and dollar value of work designated for participation by MBEs and/or WBEs, and the time frames in which such work is scheduled to begin and end; as well as the name, addresses, and telephone numbers of the M/WBE subcontractors if required by the solicitation; and (d) the prospective contractor's required certification and affirmations. The contractor must engage in good faith efforts to meet the **Participation Goals** as established for the Task Order unless Agency has granted the contractor a pre-award waiver of the **Participation Goals** in accordance with Section 6-129 and Part A, Section 10 below.

C. THE BIDDER/PROPOSER MUST COMPLETE THE SCHEDULE B INCLUDED HEREIN (SCHEDULE B, PART 2). A SCHEDULE B SUBMITTED BY THE BIDDER/PROPOSER WHICH DOES NOT INCLUDE THE VENDOR CERTIFICATION AND REQUIRED AFFIRMATIONS WILL BE DEEMED TO BE NON-RESPONSIVE, UNLESS A FULL WAIVER OF THE PARTICIPATION GOALS IS GRANTED (SCHEDULE B, PART 3). IN THE EVENT THAT THE CITY DETERMINES THAT THE BIDDER/PROPOSER HAS SUBMITTED A SCHEDULE B WHERE THE VENDOR CERTIFICATION AND REQUIRED AFFIRMATIONS ARE COMPLETED BUT OTHER ASPECTS OF THE SCHEDULE B ARE NOT COMPLETE, OR CONTAIN A COPY OR COMPUTATION ERROR THAT IS AT ODDS WITH THE VENDOR CERTIFICATION AND AFFIRMATIONS, THE BIDDER/PROPOSER WILL BE NOTIFIED BY THE AGENCY AND WILL BE GIVEN FOUR (4) CALENDAR DAYS FROM RECEIPT OF NOTIFICATION TO CURE THE SPECIFIED DEFICIENCIES AND RETURN A COMPLETED SCHEDULE B TO THE AGENCY. FAILURE TO DO SO WILL RESULT IN A DETERMINATION THAT THE BID/PROPOSAL IS NON-RESPONSIVE. RECEIPT OF NOTIFICATION IS DEFINED AS THE DATE NOTICE IS E-MAILED OR FAXED (IF THE BIDDER/PROPOSER HAS PROVIDED AN E-MAIL ADDRESS OR FAX NUMBER), OR NO LATER THAN FIVE (5) CALENDAR DAYS FROM THE DATE OF MAILING OR UPON DELIVERY, IF DELIVERED.

5. Where an **M/WBE** Utilization Plan has been submitted, the Contractor shall, within 30 days of issuance by Agency of a notice to proceed, submit a list of proposed persons or entities to which it intends to award subcontracts within the subsequent 12 months. In the case of multi-year contracts, such list shall also be submitted every year thereafter. The Agency may also require the Contractor to report periodically about the contracts awarded by its direct subcontractors to indirect subcontractors (as defined in Section 6-129(c)(22)). **PLEASE NOTE: If this Contract is a public works project subject to GML §101(5) (i.e., a contract valued at or below $3M for projects in New York City) or if the Contract is subject to a project labor agreement in accordance with Labor Law §222, and the bidder is required to identify at the time of bid submission its intended subcontractors for the Wicks trades (plumbing and gas fitting; steam heating, hot water heating, ventilating and air conditioning (HVAC); and electric wiring), the Contractor must identify all those to which it intends to award construction subcontracts for any portion of the Wicks trade work at the time of bid submission, regardless of what point in the life of the contract such subcontracts will occur. In identifying intended subcontractors in the bid submission, bidders may satisfy any Participation Goals established for this Contract by proposing one or more subcontractors that are MBEs and/or WBEs for any portion of the Wicks trade work.** In the event that the Contractor's selection of a subcontractor is disapproved, the Contractor shall have a reasonable time to propose alternate subcontractors.

6. MBE and WBE firms must be certified by DSBS in order for the Contractor to credit such firms' participation toward the attainment of the **Participation Goals**. Such certification must occur prior to the firms' commencement of work. A list of city-certified MBE and WBE firms may be obtained from the DSBS

website at www.nyc.gov/buycertified, by emailing DSBS at buyer@sbs.nyc.gov, by calling (212) 513-6451, or by visiting or writing DSBS at One Liberty Plaza, New York, New York, 10006, 11th floor. Eligible firms that have not yet been certified may contact DSBS in order to seek certification by visiting www.nyc.gov/getcertified, emailing MWBE@sbs.nyc.gov, or calling the DSBS certification helpline at (212) 513-6311. A firm that is certified as both an MBE and a WBE may be counted either toward the goal for MBEs or the goal for WBEs, but not both. No credit shall be given for participation by a graduate MBE or graduate WBE, as defined in Section 6-129(c)(20).

7. Where an **M/WBE** Utilization Plan has been submitted, the Contractor shall, with each voucher for payment, and/or periodically as Agency may require, submit statements, certified under penalty of perjury, which shall include, but not be limited to,: the total amount the Contractor paid to its direct subcontractors, and, where applicable pursuant to Section 6-129(j), the total amount direct subcontractors paid to indirect subcontractors; the names, addresses and contact numbers of each MBE or WBE hired as a subcontractor by the Contractor, and, where applicable, hired by any of the Contractor's direct subcontractors; and the dates and amounts paid to each MBE or WBE. The Contractor shall also submit, along with its voucher for final payment: the total amount it paid to subcontractors, and, where applicable pursuant to Section 6-129(j), the total amount its direct subcontractors paid directly to their indirect subcontractors; and a final list, certified under penalty of perjury, which shall include the name, address and contact information of each subcontractor that is an MBE or WBE, the work performed by, and the dates and amounts paid to each.

8. If payments made to, or work performed by, MBEs or WBEs are less than the amount specified in the Contractor's **M/WBE** Utilization Plan, Agency shall take appropriate action, in accordance with Section 6-129 and Article II below, unless the Contractor has obtained a modification of its **M/WBE** Utilization Plan in accordance with Section 6-129 and Part A, Section 11 below.

9. Where an **M/WBE** Utilization Plan has been submitted, and the Contractor requests a change order the value of which exceeds the greater of 10 percent of the Contract or Task Order, as applicable, or $500,000, Agency shall review the scope of work for the Contract or Task Order, as applicable, and the scale and types of work involved in the change order, and determine whether the **Participation Goals** should be modified.

10. Pre-award waiver of **the Participation Goals**.

(a) A bidder or proposer, or contractor with respect to a Task Order, may seek a pre-award full or partial waiver of the Participation Goals in accordance with Section 6-129, which requests that Agency change one or more **Participation Goals** on the grounds that the **Participation Goals** are unreasonable in light of the availability of certified firms to perform the services required, or by demonstrating that it has legitimate business reasons for proposing a lower level of subcontracting in its M/WBE Utilization Plan.

(b) To apply for a full or partial waiver of the **Participation Goals**, a bidder, proposer, or contractor, as applicable, must complete Part 3 of Schedule B **and submit such request no later than seven (7) calendar days prior to the date and time the bids, proposals, or Task Orders are due, in writing to the Agency by email at MWBEModification@ddc.nyc.gov**. **Full or partial waiver requests that are received later than seven (7) calendar days prior to the date and time the bids, proposals, or Task Orders are due may be rejected as untimely**. Bidders, proposers, or contractors, as applicable, who have submitted timely requests will receive an Agency response by no later than two (2) calendar days prior to the due date for bids, proposals, or Task Orders; provided, however, that if that date would fall on a weekend or holiday, an Agency response will be provided by close-of-business on the business day before such weekend or holiday date.

(c) If the Agency determines that the **Participation Goals** are unreasonable in light of the availability of certified firms to perform the services required, it shall revise the solicitation and extend the deadline for bids and proposals, or revise the Task Order, as applicable.

(d) Agency may grant a full or partial waiver of the **Participation Goals** to a bidder, proposer or contractor, as applicable, who demonstrates—before submission of the bid, proposal or Task Order, as applicable—that it has legitimate business reasons for proposing the level of

subcontracting in its **M/WBE** Utilization Plan. In making its determination, Agency shall consider factors that shall include, but not be limited to, whether the bidder, proposer or contractor, as applicable, has the capacity and the bona fide intention to perform the Contract without any subcontracting, or to perform the Contract without awarding the amount of subcontracts represented by the **Participation Goals**. In making such determination, Agency may consider whether the **M/WBE** Utilization Plan is consistent with past subcontracting practices of the bidder, proposer or contractor, as applicable, whether the bidder, proposer or contractor, as applicable, has made efforts to form a joint venture with a certified firm, and whether the bidder, proposer, or contractor, as applicable, has made good faith efforts to identify other portions of the Contract that it intends to subcontract.

11. Modification of **M/WBE** Utilization Plan. (a) A Contractor may request a modification of its **M/WBE** Utilization Plan after award of this Contract. **PLEASE NOTE: If this Contract is a public works project subject to GML §101(5) (i.e., a contract valued at or below $3M for projects in New York City) or if the Contract is subject to a project labor agreement in accordance with Labor Law §222, and the bidder is required to identify at the time of bid submission its intended subcontractors for the Wicks trades (plumbing and gas fitting; steam heating, hot water heating, ventilating and air conditioning (HVAC); and electric wiring), the Contractor may request a Modification of its M/WBE Utilization Plan as part of its bid submission.** The Agency may grant a request for Modification of a Contractor's **M/WBE** Utilization Plan if it determines that the Contractor has established, with appropriate documentary and other evidence, that it made reasonable, good faith efforts to meet the **Participation Goals**. In making such determination, Agency shall consider evidence of the following efforts, as applicable, along with any other relevant factors:

(i) The Contractor advertised opportunities to participate in the Contract, where appropriate, in general circulation media, trade and professional association publications and small business media, and publications of minority and women's business organizations;

(ii) The Contractor provided notice of specific opportunities to participate in the Contract, in a timely manner, to minority and women's business organizations;

(iii) The Contractor sent written notices, by certified mail or facsimile, in a timely manner, to advise MBEs or WBEs that their interest in the Contract was solicited;

(iv) The Contractor made efforts to identify portions of the work that could be substituted for portions originally designated for participation by MBEs and/or WBEs in the **M/WBE** Utilization Plan, and for which the Contractor claims an inability to retain MBEs or WBEs;

(v) The Contractor held meetings with MBEs and/or WBEs prior to the date their bids or proposals were due, for the purpose of explaining in detail the scope and requirements of the work for which their bids or proposals were solicited;

(vi) The Contractor made efforts to negotiate with MBEs and/or WBEs as relevant to perform specific subcontracts, or act as suppliers or service providers;

(vii) Timely written requests for assistance made by the Contractor to Agency's M/WBE liaison officer and to DSBS;

(viii) Description of how recommendations made by DSBS and Agency were acted upon and an explanation of why action upon such recommendations did not lead to the desired level of participation of MBEs and/or WBEs.

Agency's M/WBE officer shall provide written notice to the Contractor of the determination.

(b) The Agency may modify the **Participation Goals** when the scope of the work has been changed by the Agency in a manner that affects the scale and types of work that the Contractor indicated in its **M/WBE Utilization Plan** would be awarded to subcontractors.

12. If the Contractor was required to identify in its bid or proposal the MBEs and/or WBEs they intended to use in connection with the performance of the Contract or Task Order, substitutions to the identified firms may only be made with the approval of the Agency, which shall only be given when the Contractor has proposed to use a firm that would satisfy the **Participation Goals** to the same extent as the firm previously identified, unless the Agency determines that the Contractor has established, with appropriate documentary and other evidence, that it made reasonable, good faith efforts. In making such determination, the Agency shall require evidence of the efforts listed in Section 11(a) above, as applicable, along with any other relevant factors.

13. If this Contract is for an indefinite quantity of construction, standard or professional services or is a requirements type contract and the Contractor has submitted an **M/WBE** Utilization Plan and has committed to subcontract work to MBEs and/or WBEs in order to meet the **Participation Goals**, the Contractor will not be deemed in violation of the M/WBE Program requirements for this Contract with regard to any work which was intended to be subcontracted to an MBE and/or WBE to the extent that the Agency has determined that such work is not needed.

14. If **Participation Goals** have been established for this Contract or a Task Order issued pursuant to this Contract, at least once annually during the term of the Contract or Task Order, as applicable, Agency shall review the Contractor's progress toward attainment of its **M/WBE** Utilization Plan, including but not limited to, by reviewing the percentage of work the Contractor has actually awarded to MBE and/or WBE subcontractors and the payments the Contractor made to such subcontractors.

15. If **Participation Goals** have been established for this Contract or a Task Order issued pursuant to this Contract, Agency shall evaluate and assess the Contractor's performance in meeting those goals, and such evaluation and assessment shall become part of the Contractor's overall contract performance evaluation.

PART B

MISCELLANEOUS

1. The Contractor shall take notice that, if this solicitation requires the establishment of a **M/WBE** Utilization Plan, the resulting contract may be audited by DSBS to determine compliance with Section 6-129. See §6-129(e)(10). Furthermore, such resulting contract may also be examined by the City's Comptroller to assess compliance with the **M/WBE** Utilization Plan.

2. Pursuant to DSBS rules, construction contracts that include a requirement for a **M/WBE** Utilization Plan shall not be subject to the law governing Locally Based Enterprises set forth in Section 6-108.1 of the Administrative Code of the City of New York.

3. DSBS is available to assist contractors and potential contractors in determining the availability of MBEs and/or WBEs to participate as subcontractors, and in identifying opportunities that are appropriate for participation by MBEs and/or WBEs in contracts.

4. Prospective contractors are encouraged to enter into qualified joint venture agreements with MBEs and/or WBEs as defined by Section 6-129(c)(30).

5. By submitting a bid or proposal the Contractor hereby acknowledges its understanding of the M/WBE Program requirements set forth herein and the pertinent provisions of Section 6-129, and any rules promulgated thereunder, and if awarded this Contract, the Contractor hereby agrees to comply with the M/WBE Program requirements of this Contract and pertinent provisions of Section 6-129, and any rules promulgated thereunder, all of which shall be deemed to be material terms of this Contract. The Contractor hereby agrees to make all reasonable, good faith efforts to solicit and obtain the participation of MBEs and/or WBEs to meet the required **Participation Goals**.

ARTICLE II. ENFORCEMENT

1. If Agency determines that a bidder or proposer, as applicable, has, in relation to this procurement, violated Section 6-129 or the DSBS rules promulgated pursuant to Section 6-129, Agency may disqualify such bidder or proposer, as applicable, from competing for this Contract and the Agency may revoke such bidder's or proposer's prequalification status, if applicable.

2. Whenever Agency believes that the Contractor or a subcontractor is not in compliance with Section 6-129 or the DSBS rules promulgated pursuant to Section 6-129, or any provision of this Contract that implements Section 6-129, including, but not limited to any **M/WBE** Utilization Plan, Agency shall send a written notice to the Contractor describing the alleged noncompliance and offering the Contractor an opportunity to be heard. Agency shall then conduct an investigation to determine whether such Contractor or subcontractor is in compliance.

3. In the event that the Contractor has been found to have violated Section 6-129, the DSBS rules promulgated pursuant to Section 6-129, or any provision of this Contract that implements Section 6-129, including, but not limited to, any **M/WBE** Utilization Plan, Agency may determine that one of the following actions should be taken:

(a) entering into an agreement with the Contractor allowing the Contractor to cure the violation;

(b) revoking the Contractor's pre-qualification to bid or make proposals for future contracts;

(c) making a finding that the Contractor is in default of the Contract;

(d) terminating the Contract;

(e) declaring the Contractor to be in breach of Contract;

(f) withholding payment or reimbursement;

(g) determining not to renew the Contract;

(h) assessing actual and consequential damages;

(i) assessing liquidated damages or reducing fees, provided that liquidated damages may be based on amounts representing costs of delays in carrying out the purposes of the M/WBE Program, or in meeting the purposes of the Contract, the costs of meeting utilization goals through additional

procurements, the administrative costs of investigation and enforcement, or other factors set forth in the Contract;

(j) exercising rights under the Contract to procure goods, services or construction from another contractor and charge the cost of such contract to the Contractor that has been found to be in noncompliance; or

(k) taking any other appropriate remedy.

4. If an **M/WBE** Utilization Plan has been submitted, and pursuant to this Article II, Section 3, the Contractor has been found to have failed to fulfill its **Participation Goals** contained in its **M/WBE** Utilization Plan or the **Participation Goals** as modified by Agency pursuant to Article I, Part A, Section 11, Agency may assess liquidated damages in the amount of ten percent (10%) of the difference between the dollar amount of work required to be awarded to MBE and/or WBE firms to meet the **Participation Goals** and the dollar amount the Contractor actually awarded and paid, and/or credited, to MBE and/or WBE firms. In view of the difficulty of accurately ascertaining the loss which the City will suffer by reason of Contractor's failure to meet the **Participation Goals**, the foregoing amount is hereby fixed and agreed as the liquidated damages that the City will suffer by reason of such failure, and not as a penalty. Agency may deduct and retain out of any monies which may become due under this Contract the amount of any such liquidated damages; and in case the amount which may become due under this Contract shall be less than the amount of liquidated damages suffered by the City, the Contractor shall be liable to pay the difference.

5. Whenever Agency has reason to believe that an MBE and/or WBE is not qualified for certification, or is participating in a contract in a manner that does not serve a commercially useful function (as defined in Section 6-129(c)(8)), or has violated any provision of Section 6-129, Agency shall notify the Commissioner of DSBS who shall determine whether the certification of such business enterprise should be revoked.

6. Statements made in any instrument submitted to Agency pursuant to Section 6-129 shall be submitted under penalty of perjury and any false or misleading statement or omission shall be grounds for the application of any applicable criminal and/or civil penalties for perjury. The making of a false or fraudulent statement by an MBE and/or WBE in any instrument submitted pursuant to Section 6-129 shall, in addition, be grounds for revocation of its certification.

7. The Contractor's record in implementing its **M/WBE** Utilization Plan shall be a factor in the evaluation of its performance. Whenever Agency determines that a Contractor's compliance with an **M/WBE** Utilization Plan has been unsatisfactory, Agency shall, after consultation with the City Chief Procurement Officer, file an advice of caution form for inclusion in PASSPort as caution data.

Affirmation

The Bidder affirms and declares:

1. The said bidder is of lawful age and the only one interested in this bid; and no person, firm or corporation other than hereinbefore named has any interest in this bid, or in the Contract proposed to be taken.

2. By submission of this bid, each bidder and each person signing on behalf of any bidder certifies, and in the case of a joint bid each party thereto certifies as to its own organization, under penalty of perjury, that to the best of its knowledge and belief: (1) the prices in this bid have been arrived at independently without collusion, consultation, communication or agreement, for the purpose of restricting competition, as to any matter relating to such prices with any other bidder or with any competitor; (2) unless otherwise required by law, the prices quoted in this bid have not been knowingly disclosed by the bidder and will not knowingly be disclosed by the bidder prior to opening, directly or indirectly, to any other bidder or to any competitor; and (3) no attempt has been made or will be made by the bidder to induce any other person, partnership or corporation to submit or not to submit a bid for the purpose of restricting competition.

3. No councilman or other officer or employee or person whose salary is payable in whole or in part from the City Treasury is directly or indirectly interested in this bid, or in the supplies, materials, equipment, work or labor to which it relates, or in any of the profits thereof.

4. The bidder is not in arrears to the City of New York upon debt or contract or taxes, and is not a defaulter, as surety or otherwise, upon any obligation of the City of New York, and has not been declared not responsible, or disqualified, by any agency of the City of New York or State of New York, nor is there any proceeding pending relating to the responsibility or qualification of the bidder to receive public contracts except as set forth on the Affirmation included as disclosed in PASSPort.

5. The bidder hereby affirms that is has paid all applicable City income, excise and other taxes for all it has conducted business activities in New York City.

6. The bidder, as an individual, or as a member, partner, director or officer of the bidder, if the same be a firm, partnership or corporation, executes this document expressly warranting and representing that should this bid be accepted by the City and the Contract awarded to him, he and his subcontractors engaged in the performance:

   (1) will comply with the provisions of Section 6-108 of the Administrative Code of the City of New York and the non-discrimination provisions of Section 220a of the New York State Labor Law, as more expressly and in detail set forth in the Agreement; (2) will comply with Section 6-109 of the Administrative Code of the City of New York in relation to minimum wages and other stipulations as more expressly and in detail set forth in the Agreement; (3) have complied with the provisions of the aforesaid laws since their respective effective dates, and (4) will post notices to be furnished by the City, setting forth the requirements of the aforesaid laws in prominent and conspicuous places in each and every plant, factory, building and structure where employees engaged in the performance of the Contract can readily view it, and will continue to keep such notices posted until the supplies, materials and equipment, or work labor and services required to be furnished or rendered by the Contractor have been finally accepted by the City. In the event of any breach or violation of the foregoing, the Contractor may be subject to damages, liquidated or otherwise, cancellation of the Contract and suspension as a

bidder for a period of three years. (The words, "the bidder", "he", "his", and "him" where used shall mean the individual bidder, firm, partnership or corporation executing this bid).

7. Compliance Report

   The bidder, as an individual, or as a member, partner, director, or officer of the bidder, if the same be a firm, partnership, or corporation, (1) represents that his attention has been specifically drawn to Executive Order No. 50, dated April 25, 1980, on Equal Employment Compliance of the contract, and (2) warrants that he will comply with the provisions of Executive Order No. 50. The Employment Report must be submitted as part of the bid.

8. The bidder, as an individual, or as a member, partner, director, or officer of the bidder, if the same be a firm, partnership, or corporation, executes this document expressly warranting that he will comply with: (1) the provision of the contract on providing records, Chapter 8.

9. By submission of this bid, the bidder certifies that it now has and will continue to have the financial capability to fully perform the work required for this contract. Any award of this contract will be made in reliance upon such certification. Upon request therefor, the bidder will submit written verification of such financial capability in a form that is acceptable to the department.

10. In accordance with Section 165 of the State Finance Law, the bidder agrees that tropical hardwoods, as defined in Section 165 of the State Finance Law, shall not be utilized in the performance of this Contract, except as the same are permitted by the foregoing provision of law.

11. The bidder has visited and examined the site of the work and has carefully examined the Contract in the form approved by the Corporation Counsel, and will execute the Contract and perform all its items, covenants and conditions, and will provide, furnish and deliver all the work, materials, supplies, tools and appliances for all labor and materials necessary or required for the hereinafter named work, all in strict conformity with the Contract, for the prices set forth in the Bid Schedule.

12. M/WBE UTILIZATION PLAN: By signing its bid, the bidder agrees to the M/WBE Vendor Certification and Required Affirmations set forth below, unless a full waiver of the Participation Goals is granted.

    I hereby:

    1) acknowledge my understanding of the M/WBE participation requirements as set forth in this Contract and the pertinent provisions of Section 6-129 of the Administrative Code of the City of New York and the rules promulgated thereunder;

    2) affirm that the information supplied in support of the M/WBE Utilization Plan is true and correct;

    3) agree, if awarded this Contract, to comply with the M/WBE participation requirements of this Contract, the pertinent provisions of Section 6-129, and the rules promulgated thereunder, all of which shall be deemed to be material terms of this Contract;

    4) agree and affirm that it is a material term of this Contract that the Vendor will award the total dollar value of the M/WBE Participation Goals to certified MBEs and/or WBEs, unless a full waiver is obtained or such goals are modified by the Agency; and

    agree and affirm, if awarded this Contract, to make all reasonable, good faith efforts to meet the M/WBE Participation Goals, or If a partial waiver is obtained or such goals are modified by the Agency, to meet the modified Participation Goals by soliciting and obtaining the participation of certified MBE and/or WBE firms.

Bid Schedule

The Questionnaire in the PASSPort system contains the Bid Schedule. Items listed in the Bid Schedule shall comply with the requirements of the corresponding sections of the specifications detailed in the table below. All references to the Standard Specifications, Details, Standards and Drawings shall be to the version in effect at the time of bid.

NOTES:

- "XXX" in the table below signifies any possible combination of characters and spaces.
- The table below may contain item formats which are not included in the Bid Schedule.
  Please refer to the Bid Schedule to determine which specifications apply.

Item Number Format	Applicable Specifications
4.XXX 6.XXX 7.XXX 8.XXX *(Except 8.01 XXX; see below)* 9.XXX HW-XXX	NYC Department of Transportation ("DOT") Standard Highway Specifications, as amended in the R-Pages, located in Volume 3 of 3 herein; ***AND*** NYC DOT Standard Details of Construction; ***OR,*** ***if the item is not contained within the Standard Specifications***, then see the applicable New Sections in the I-Pages, located in Volume 3 of 3 herein.
1.XXX 50.XXX through 55.XXX 60.XXX through 66.XXX 70.XXX through 79.XXX *(Except 79.11XXX; see below)* DSS XXX DSW XXX	NYC Department of Environmental Protection ("DEP") Standard Sewer and Water Main Specifications, as amended in the R-Pages and SW-Pages, located in Volume 3 of 3 herein; ***AND*** NYC DEP Specifications for Trunk Main Work; ***AND*** NYC DEP Sewer Design Standards; ***AND*** NYC DEP Water Main Standard Drawings; ***OR,*** ***if the item is not contained within the Standard Specifications,*** then see the Amendments to the Standard Sewer and Water Main Specifications in the SW-Pages, located in Volume 3 of 3 herein.
GI-XXX PM-XXX ROW XXX	New Sections in the I-Pages, located in Volume 3 of 3 herein ***AND*** NYC DEP Standards for Green Infrastructure.

Item Number Format	Applicable Specifications
UTL-XXX	Gas Cost Sharing Standard Specifications in the EP7-Pages, located in Volume 3 of 3 herein.
83X.XXX MX.XXX MP XXX NYC-XXX NYCT-XXX NYPD-XXX P XXX PK-XXX	New Sections in the I-Pages, located in Volume 3 of 3 herein.
BMP-XXX	Specifications for Construction of Best Management Practice (BMP) and Mitigation Area in the BMP-Pages, located in Volume 3 of 3 herein.
E XXX ME XXX	Specifications for the Specialty Electrical Works in the EL-Pages, located in Volume 3 of 3 herein.
SL-XXX	NYC DOT Division of Street Lighting Specifications ***AND*** NYC Division of Street Lighting Standard Drawings.
T-XXX	NYC DOT Specifications for Traffic Signals and Intelligent Transportation Systems ***AND*** NYC DOT Traffic Signal Standard Drawings.
JB XXX	Joint Bid Specifications in the JB-Pages, located in Volume 3 of 3 herein.
8.01 XXX	Specifications for Handling, Transportation and Disposal of Nonhazardous and Potentially Hazardous Contaminated Materials in the HAZ-Pages, located in Volume 3 of 3 herein.
67.XXX	Specifications for Abatement of Coal Tar Wrap Asbestos Containing Materials in the ASB-Pages, located in Volume 3 of 3 herein.
79.11XXX	Specifications for Abatement of Transit Authority Duct Insulation Asbestos Containing Materials in the ASB-Pages, located in Volume 3 of 3 herein.

Pre-Award Process

The bidder is advised that as part of the pre-award review of its bid, it may be required to submit the information described in Sections (A) through (D) below. If required, the bidder must submit such information within five (5) business days following receipt of notification from DDC that it is among the low bidders. Such notification from DDC will be by email and will specify the types of information which must be submitted directly to DDC.

In the event the bidder fails to submit the required information within the specified time frame, its bid may be rejected as nonresponsive.

****

(A) **Project Reference Form**: If required, the bidder must complete and submit the Project Reference Form set forth in this Bid Booklet. The Project Reference Form consists of 3 parts: (1) Contracts Completed by the Bidder, (2) Contracts Currently Under Construction by the Bidder, and (3) Pending Contracts Not Yet Started by the Bidder.

(B) **Copy of License**: If required, the bidder must submit a copy of the license under which the bidder will be performing the work. Such license must clearly show the following: (1) Name of the Licensee, (2) License Number, and (3) Expiration date of the License. A copy of the license will be required from bidders for the following contracts: Plumbing Work, Electrical Work and Asbestos Abatement.

(C) **Financial Information**: If required, the bidder must submit the financial information described below:

(1) Audited Financial Statements: Financial statements (Balance Sheet and Income Statement) of the entity submitting the bid, as audited by an independent auditor licensed to practice as a certified public accountant (CPA). Audited financial statements for the three most recent fiscal years must be submitted. Each such financial statement must include the auditor's standard report.

If the bidder does not have audited financial statements, it must submit an affidavit attesting to the fact that the bidder does not have such statements. In addition, the bidder must submit the following documentation covering the three most recent fiscal years: signed federal tax returns, unaudited financial statements, and a "certified review letter" from a certified public accountant (CPA) verifying the unaudited financial statements.

Unless the most recent audited or unaudited financial statement was issued within ninety (90) days, the bidder must submit interim financial information that includes data on financial position and results of operation (income data) for the current fiscal year. Such information may be summarized on a monthly or quarterly basis or at other intervals.

(2) Schedule of Aged Accounts Receivable, including portion due within ninety (90) days.

(D) **Project Specific Information**: If required, the bidder must submit the project specific information described below:

(1) Statement indicating the number of years of experience the bidder has had and in what type of construction.

(2) Resumes of all key personnel to be involved in the project, including the proposed project superintendent.

(3) List of significant pieces of equipment expected to be used for the contract, and whether such equipment is owned or leased.

(4) Description of work expected to be subcontracted, and to what firms, if known.

(5) List of key material suppliers.

(6) Preliminary bar chart time schedule

(7) Contractor's expected means of financing the project. This should be based on the assumption that the contractor is required to finance 2X average monthly billings throughout the contract period.

(8) Any other issues the contractor sees as impacting his ability to complete the project according to the contract.

In addition to the information described in Sections (A) through (D) above, the bidder shall submit such additional information as the Commissioner may require, including without limitation, an explanation or justification for specific unit price items.

The bidder is further advised that it may be required to attend a pre-award meeting with DDC representatives. If such a meeting is convened, the bidder will be advised as to any additional material to be provided.

JRCRUZ

Completed Projects

CONTRACT NO. SE-734 CONSTRUCTION OF SANITARY AND STORM SEWERS AND APPURTENANCES IN RICHARD AVE. BOROUGH OF STATEN ISLAND, NY	INSTALL SANITARY & STORM SEWERS AND WATER MAIN STREET LIGHTING AND TRAFFIC WORK	$12,799,997.00	Jul-17	N.Y.C DEPT. OF DESIGN & CONSTRUCTION 30-30 THOMSON AVENUE LONG ISLAND CITY, NY 11101	SAME AS OWNER SAM RIAD 917-939-7339
CONTRACT NO. CS-JA-BBS BERGEN BASIN SEWER RECONSTRUCTION BOROUGH OF QUEENS, NY	600 LF OF MICROTUNNELING 1 JACKING SHAFT 2 RECEIVING SHAFTS RELOCATION OF WATER MAINS AND FINAL RESTORATION	$20,256,909.00	Jan-17	N.Y.C. DEPT. OF ENVIRONMENTLA PROTECTION 59-17 JUNCTION BOULEVARD FLUSHING, NY 11373	SAME AS OWNER NEIL O'CONOR 718-848-2807
CONTRACT NO. HWCSCH3F SAFE RUTES TO SCHOOL PHASE III, 3 SCHOOLS BOROUGH OF STATEN ISLAND, NY	SAFE ROUTES TO SCHOOL PHASE III INCLUDING CURBS & SITEWALKS RECONSTRUCTION, PAVEMENT MARKINGS, SEWERS, WATERMAINS, STREET LIGHTING	$2,136,042.48	Jun-16	N.Y.C DEPT. OF DESIGN & CONSTRUCTION 30-30 THOMSON AVENUE LONG ISLAND CITY, NY 11101	SAME AS OWNER Joseph Piwowarski 718-391-1296
HD153C EDGEMERE URBAN RENEWAL AREA PHASE C1 BEACH 43RD STREET FAR ROCKAWAY, NY	CONSTRUCTION OF SANITARY AND STORM SEWERS AND WATER MAINS	$24,350,628.00	May-16	N.Y.C DEPT. OF DESIGN & CONSTRUCTION 30-30 THOMSON AVENUE LONG ISLAND CITY, NY 11101	SAME AS OWNER Mehraban Ahouraie 718-391-1953
CONTRACT NO. HD153C2 RECONSTRUCTION OF EDGEMERE URBAN RENEWAL AREA. PASE C2 QUEENS, NY	INSTALL SANITARY SEWERS AND WATER MAIN STREET LIGHTING AND TRAFFIC WORK	$37,798,798.00	May-17	N.Y.C DEPT. OF DESIGN & CONSTRUCTION 30-30 THOMSON AVENUE LONG ISLAND CITY, NY 11101	SAME AS OWNER Mehraban Ahouraie 718-391-1953
CONTRACT NO. 19720006 NEW STAPLETON WATERFRONT PHASE II PROJECT	ROADWAY RECONSTRUCTION OPEN SPACE, UNDERGROUND UTILITIES, PATHWAY LANDSCAPING AND ELECTRICAL WORK	$12,179,902.00	Dec-17	N.Y.C EDC 110 WILLIAM STREET NEW YORK, NY 100038	Kristofer Segler 718-447-1121
CONTRACT NO. MIBBNC001 CONSTRUCTION OF COMBINED SEWERS AND APPURTENANCES IN KISWICK AVE., BOROUGH OF STATEN ISLAND, NY	CONSTRUCTION OF COMBINED SEWERS, INSTALLATION OF WATER MAINS, BMP WORK, FINAL RESTORATION WORK	$22,228,507.00	Feb-18	N.Y.C DEPT. OF DESIGN & CONSTRUCTION 30-30 THOMSON AVENUE LONG ISLAND CITY, NY 11101	David Peterson 347-723-1439

CONTRACT NO. SER002311 CONSTRUCTION OF SANITARY AND STORM SEWERS I IN BERTRAM AVENUE BOROUGH OF STATEN ISLAND, NY	CONSTRUCTION OF COMBINED SEWERS, INSTALLATION OF WATER MAINS, SIDEWALKS MICROTUNNEL PIPE FINAL RESTORATION WORK	$18,321,123.00	Jan-18	N.Y.C DEPT. OF DESIGN & CONSTRUCTION 30-30 THOMSON AVENUE LONG ISLAND CITY, NY 11101	Mohammad Sadiq, P.E. 718-391-1463
CONTRACT NO. 27360016 HUNTER'S POINT SOUTH PHASE 2 PROJECT QUEENS WEST, NY	INSTALLATION OF STORM AND SANITARY SEWERS, PRIVATE UTILITY WORK, NEW PAVEMENT, SIDEWALKS, CURBS, LANSDSCPING, STREET LIGHTS, ETC.	$23,589,935.30	Jan-18	NYS EDC (Owner) LIRO PROGRAM AND CONSTRUCTION MANAGEMENT, PE, P.C. (Prime) 3 AERIAL WAY, SYOSSET, NY 11791	James Eckhoff 516-938-5476
CONTRACT NO. HWQ213C RECONSTRUCTION OF MAIN STREET WITH WIDENED SIDEWALKS IN DOWNTOWN FLUSHING BOROUGH OF QUEENS, NY	CONSTRUCTION OF COMBINED SEWERS, INSTALLATION OF WATER MAINS, SIDEWALKS AND FINAL RESTORATION WORK	$7,800,915.00	Jan-18	N.Y.C DEPT. OF DESIGN & CONSTRUCTION 30-30 THOMSON AVENUE LONG ISLAND CITY, NY 11101	Mohammad Sadiq, P.E. 718-391-1463
CONTRACT NO. 195456 HARDSCAPE AND GUTTER RECONSTRUCTION COLLEGE OF STATEN ISLAND	GUTTER RECONSTRUCTION, ARCHITECTURAL CAST IN PLACE CONCRETE, AND PRECAST CONCRETE, CLAY ROOF TILES ROOF SPECIALTIES, CONCRETE PAVEMENT LANDSCAPE, UTILITY DRAINAGE AND PIPING	$6,200,000.00	Apr-18	DASNY 515 BROADWAY ALBANY, NY 12207	Jack Kemp 518-257-3000
CONTRACT NO. 0146 MIDLAND PERMANENT WATER INTAKE SYSTEM BOROUGH OF MIDLAND	CONSTRUCTION OF WATER INTAKE SYSTEM PUMP STATION CONTROL BUILDING WITH HVAC, PLUMBING, ELECTRICAL, PERMANENT 24" CONNECTION AT EXISTING WATER MAIN TREATMENT PLANT VIA MICROTUNNEL	$5,088,540.00	Jul-18	MUNICIPAL AUTHORITY OF THE BOROUGH OF MIDLAND 946 RAILROAD AVENUE MIDLAND, PA 15059	Daniel A. Sell, P.E. 724-847-1996
CONTRACT NO. SEQ200492 CONSTRUCTION OF COMBINED SEWERS AND APPURTENANCES IN 41st AVENUE BOROUGH OF QUEENS, NY	CONSTRUCTION OF COMBINED SEWERS, INSTALLATION OF WATER MAINS, AND FINAL RESTORATION WORK	$6,593,834.21	Jun-19	N.Y.C DEPT. OF DESIGN & CONSTRUCTION 30-30 THOMSON AVENUE LONG ISLAND CITY, NY 11101	Lambert Monah 718-391-2469
CONTRACT NO. W912DS17C0007 GOETHALS BRIDGE REPLACEMENT MITIGATION OLD PLACE CREEK STATEN ISLAND, NY	GOETHALS BRIDGE REPLACEMENT PROJECT WETLANDS MITIGATION	$10,221.014.00	Jan-19	DEPARTMENT OF THE ARMY U.S. ARMY CORPS OF ENGINEERS NEW YORK DISTRICT JACOB K. JAVITS FEDERAL BUILDING 26 FEDERAL PLAZA NEW YORK, NY 10278-0090	Alex Heinzel 917-790-8087
CONTRACT NO. HWP15RSC INSTALLATION OF SIMPLE AND COMPLEX PEDESTIRAN RAMPS STATEN ISLAND	INSTALLATION OF SIMPLE AND COMPLEX PEDESTRIAN RAMPS INCLUDING CURB & SIDEWALK RECONSTRUCTION, STREET LIGHTING, AND TRAFFIC SIGNAL WORK	$2,205,691.00	Mar-19	N.Y.C DEPT. OF DESIGN & CONSTRUCTION 30-30 THOMSON AVENUE LONG ISLAND CITY, NY 11101	FRANCO MESITI 718-391-1044

CONTRACT NO. MED642 INSTALLATION OF WATER MAINS & APPURTENANCES FOR NEW BLDG CONSTRUCTION MANHATTAN, NY	INSTALLATION OF WATER MAINS & APPURTENANCES FOR NEW BLDG CONSTRUCTION & FOR IMPROVEMENTS TO THE CITY'S MAIN DISTRIBUTION SYSTEM & FIRE PROTECTION IN VARIOUS LOCATIONS	$3,995,599.00	Mar-19	N.Y.C DEPT. OF DESIGN & CONSTRUCTION 30-30 THOMSON AVENUE LONG ISLAND CITY, NY 11101	Hardik Shah 212-564-9603
CONTRACT NO. HWPR17R REHABILITATION OF PEDESTRIAN RAMPS STATEN ISLAND, NY	REHABILITATION OF PEDESTRIAN RAMPS IN DESIGNATED AREAS	$5,698,825.00	Mar-19	N.Y.C DEPT. OF DESIGN & CONSTRUCTION 30-30 THOMSON AVENUE LONG ISLAND CITY, NY 11101	SAMEH RIAD 917-939-7339
CONTRACT NO. HWS16CW2 INSTALLATION OF SIDEWALKS, ADJACENT CURBS & PEDESTRIAN RAMPS BRONX, MANHATTAN & STATEN ISLAND	INSTALLATION OF SIDEWALKS, ADJACENT CURBS & PEDESTRIAN RAMPS IN VARIOUS LOCATIONS	$4,110,895.00	Apr-19	N.Y.C DEPT. OF DESIGN & CONSTRUCTION 30-30 THOMSON AVENUE LONG ISLAND CITY, NY 11101	SAMEH RIAD 917-939-7339
GCHP24-02 HUTCHINSON RIVER CSO TRIBUTARY ARE HP-024 AND HP-023 BRONX, NY	POROUS PAVEMENT RESTORATION	$2,978,869.20	Aug-19	N.Y.C DEPT. OF DESIGN & CONSTRUCTION 30-30 THOMSON AVENUE LONG ISLAND CITY, NY 11101	Srinini Keshava 917-393-7330
HED-573 Waldo Avenue Staten Island, NY	Replacement of water mains, including combined sewers, pavement restoration, curbs and sidewalks	$12,428,170.00	Nov-19	NYCDDC 3030 Thomson Avenue, LIC, NY 11101	Adam Alweiss 718-391-1357
CONTRACT NO. SE798 CONSTRUCTION OF COMBINED SEWERS AND APPURTENANCES IN ARMSTRONG AVE., BOROUGH OF STATEN ISLAND, NY	CONSTRUCTION OF COMBINED SEWERS, INSTALLATION OF WATER MAINS, BMP WORK, FINAL RESTORATION WORK	$38,363,359.00	Oct-20	N.Y.C DEPT. OF DESIGN & CONSTRUCTION 30-30 THOMSON AVENUE LONG ISLAND CITY, NY 11101	Mayur Patel, P.E. 718-966-2540
CONTRACT NO. R135-113MA RECONSTRUCTION OF PATHS, SITE FURNISHINGS & LANDSCAPE AT CRESCENT BEACH PARK STATEN ISLAND, NY	RECONSTRUCTION OF PATHS, SITE FURNISHINGS & LANDSCAPE AT CRESCENT BEACH PARK	$1,850,000.00	Oct-20	CITY OF NEW YORK PARKS & RECREATION OLMSTEAD CENTER FM-CP FLUSHING, NY 11368	Francisco Collomer 347-947-0906
HWPLZ011K ZION PLAZA BROOKLYN, NY	RECONSTRUCTION OF ZION PLAZA, INCLUDING CURBS, SIDEWALKS STREET LIGHTING, TRAFFIC SIGNAL AND BIOSWALE WORK	$3,854,458.00	Apr-20	NYC Dept. of Design & Construction 3030 Thomson Avenue LIC, NY 11101	Robert Yueh, P.E. 718-391-1937
LT-234.194 LINCOLN TUNNEL - FLOOD PROTECTION FOR VENTILIATION BUILDINGS AND EMERGENCY GENERATORS	STOP LOG SYSTEM ASSEMBLY; CONCRETE DRILLED SHAFT; CONCRETE BEAMS, FLOOD WALLS, SCREEN WALLS; DRAINAGE BASIN; UTILITY PIPE RELOCATION; LEAD PAINT REMOVAL & CONTAMINATED SOIL DISPOSAL	$2,278,900.00	Jan-20	PANYNJ 4 WORLD TRADE CENTER 150 GREENWICH STREET NY, NY 10007	Michael Murray, PE 201-595-4884

SEK20068 9TH STREET BRIDGE BROOKLYN, NY	CONSTRUCTION OF STORM AND COMBINED SEWERS AND APPURTENANCES INCLUDING ROAD RESTORATION	$22,802,911.25	Feb-20	NYC DEPT. OF DESIGN AND CONSTRUCTION 3030 THOMSON AVENUE LIC, NY 11101	Steve Kelczewski (917) 970-2549
RICHMOND UNIVERSITY MEDICAL CENTER 355 BARD AVENUE STATEN ISLAND, NY	CONSTRUCTION OF PARKING LOT	$2,457,000.00	Nov-20	RICHMOND UNIVERSITY MEDICAL CENTER 355 BARD AVENUE STATEN ISLAND, NY	Joe Earl (732) 507-8499
Reconstruction of DUMBO Area (Subcontractor to Halcyon Construction Corp.) Brooklyn, NY HWKKP005	Install CFA Piles for support of sewer	$4,539,400.00	Dec-20	Halcyon Construction Corp. (Prime) 65 Marble Avenue, Pleasantville, NY 10570 (914) 741-1112 NYCDDC (Owner) 3030 Thomson, LIC, NY 11101 Lafayette Cisco	Tectonic Engineering Mina Marcos, RE 718-362-6105 516-852-8595
Construction of Storm & Sanitary Sewers in Acacia Avenue Staten Island, NY SER200245	New storm and sanitary sewers on timber and CFA piles, installation of new water main, curbs, sidewalks, roadway restoration, construction of multiple outfalls and BMP (Best Management Practice) to reduce flooding to the neighborhood	$24,898,894.54	May-21	NYCDDC Timothy Lattanzio, PE 3030 Thomson Avenue, LIC, NY 11101 LattanzTi@ddc.nyc.gov 646-369-0448	JWP Engineering (RE) John Pusz, PE (retired) 732-947-1265 YOR Engineering (OE) Yogesh Ravanan, PE
Harlem Station - Park Avenue & 125th Street Manhattan, NY 54970003	Reconstruction of Harlem Station, new drainage work, curb, sidewalk, electrical & traffic signals, specialty aggregate concrete	$4,751,590.96	May-21	NYCEDC Yvi McEvilly One Liberty Plaza, New York, NY ymcevilly@edc.nyc 212-312-3968	NYCEDC Yvi McEvilly One Liberty Plaza, New York, NY ymcevilly@edc.nyc 212-312-3968
Construction of Storm & Sanitary Sewers in Glen Street Staten Island, NY SER200226	New storm and sanitary sewers, installation of new water mains, curbs, and sidewalks, roadway restoration, construction of an outfall sewer and BMP to manage storm water to reduce flooding in the neighborhood	$27,893,428.42	Jun-21	NYCDDC Monzer Shahin 3030 Thomson Avenue, LIC, NY 11101 ShahinM@ddc.nyc.gov 917-337-6031	Hardesty & Hanover Wessam Fahmy, PE ser200226@gmail.com 917-684-4177
Reconstruction of Sidwalks Staten Island, NY RG-418M	Reconstruction of sidewalks damaged by adjacent City-owned trees	$2,900,000.00	Jul-21	NYC Parks Henry Torres Henry.Torres@parks.nyc.gov 718-760-4128	NYC Parks Timothy Simmons Timothy.Simmons@parks.nyc.gov 347-986-6462
Green Infrastructure Project 2018 Contract 2 Union City, NJ	Construction of bioretention systems for storm water recovery	$230,000.00	Nov-21	North Hudson Sewerage Authority 1600 Adams Street, Hoboken, NJ 07030	Mott MacDonald Kevin Wynn, PE kevin.wynn@mottmac.com 973-912-2537
Contract #D005768 General Construction Marsha P. Johnson / East River State Park	Sitewide rehabilitation & improvements	$7,207,654.00	Nov-21	NYS Office of Parks, Recreation & Historic Preservation 163 West 125th Street, New York, NY 10027	Patricia Kirshner 212-866-3100

Pier 42 NYEDC Contract No. 73720001 Contract No. 2 - Sewer Improvements	Removals within the footprint of the Park; sewer improvements including: removals, smapling, testing, trucking and disposal of soils; sewers improvements, drainage installation and erosion and sediment control	$4,400,000.00	Dec-21	LiRo Engineers, Inc. Daniel Bradley bradleyd@liro.com 516-938-5476 3 Aerial Way, Syosset, NY 11791	LiRo Engineers, Inc. Daniel Bradley bradleyd@liro.com 516-938-5476 3 Aerial Way, Syosset, NY 11791
2020 Water Main Replacements Bethpage Water District Massapequa Water District South Farmingdale Water Idstrict	Water main installation, hydrant replacements, water service improvements, and site restoration	$5,891,100.00	Dec-21	Massapequa Water District 84 Grand Avenue Massapequa, NY	D&B Engineers and Architects Kurt Dirr kdirr@db-eng.com 516-364-9890 330 Crossways Park Drive, Woodbury, NY
Pratt Industries Paper Mill Staten Island, NY	Install steep pipe piles for support of wastewater treatment plant	$799,318.75	Jan-22	Pratt Industries Paper Mill Muneer Ahmad 4435 Victory Blvd., Staten Island, NY mahmad@prattindustries.com 718-702-7877	Kar Engineering Mike Rowe micro@kar.org 908-642-4533
Microtunneling at MM116 Garden State Parkway (Subcontractor to Earle)	Completed a roughly 430 lf microtunnel under the Garden State Parkway with 66" diameter Permalok steel casing	$775,750.00	Jan-22	Earle (Prime) 1800 NJ-34, Wall, NJ 07719 732-308-1113 NJTA (Owner) 1 Turnpike Plaza, Woodbridge, NJ, 07095	N/A
City of Long Beach Drainage Improvements Project	Installation of various sized storm sewer pipes and manholes to improve drainage; site restoration at West Park Avenue, National Blvd., and East Pine Street	$6,101,563.00		City of Long Beach One Westchester Street Long Beach, NY 11561 Joseph Febrizio febrizio@longbeachny.gov	City of Long Beach One Westchester Street Long Beach, NY 11561
Bioswales Contract 1 (Queens) 53320022-01	Installation of right-of-way green infrastructure including NYCHA stormwater detention systems	$27,056,117.00	Feb-22	The LiRo Group James Eckhoff, PE eckhoffj@liro.com 516-698-4988 87-12 101st Avenue, Ozone Park, NY 11416	The LiRo Group Jon Grubman, RLA, ASLA grubmanj@liro.com 516-382-2837 87-12 101st Avenue, Ozone Park, NY 11416
Bioswales Contract 2 (Queens) 53320022-02	Installation of right-of-way green infrastructure including NYCHA stormwater detention systems	$27,439,817.13	Mar-22	The LiRo Group James Eckhoff, PE eckhoffj@liro.com 516-698-4988 87-12 101st Avenue, Ozone Park, NY 11416	The LiRo Group Jon Grubman, RLA, ASLA grubmanj@liro.com 516-382-2837 87-12 101st Avenue, Ozone Park, NY 11416
Milling - Staten Island (Days) HW2CR19E	Task order based Contract to mill roadways in Staten Island	$20,615,097.50	Apr-22	NYCDOT Navanjot Ahluwalia nahuwalia@dot.nyc.gov 646-951-4318 55 Water Street, NY, NY 10041	N/A
Westchester Avenue Bridge Repairs D264280 The Bronx	Rehabilitation of NYSDOT bridge at Westchester Avenue over Sheridan Blvd.	$3,323,201.25	Apr-22	NYSDOT Md Sumsurzaha, PE md.sumsurzaha@dot.ny.gov 347-607-6800	N/A
Bowery Bay Bioswale Project GCBB26-01 Queens	Installation of right-of-way green infrastructure	$5,942,887.08	Jan-21	NYCDDC Luis Frias friasl@ddc.nyc.gov 646-235-6352 3030 Thomson Avenue, LIC, NY 11101	N/A

Sawmill River Parkway D264415	Rehabilitation of the catch basins along Saw Mill River Parkway	$995,575.00	Sep-21	NYSDOT Dina Colavito dina.colavito@dot.ny.gov 914-722-6512	N/A
Monhagen Brook Culvert Project: Grant Street Culvert Replacement	Removal of two existing culverts, relocation/ replacement of existing utilities, removal of catch basins, and restoration	$1,069,076.00	May-22	City of Middletown 16 James Street Middletown, NY 10940	Jacob Tawil, P.E. 845-343-3169
Governor's Office of Storm Recovery Fresh Creek Coastal Protection General Construciton Project No. 3354709999	Construction of tide gate chambers and reconstruction of collapsed outfall	$6,700,000.00	Jul-22	DASNY 515 Broadway, Albany, NY 12207 Robert Thelian rthelilan@dasny.org	DACK Consulting Nasim Nourozi nnourozi@dackconsulting.com 914-686-7102
Hunts Point Interstate Access Improvement Project (NYSDOT Contract No. D900051)	Sewer and water main installation (Bruckner Avenue)	$5,000,000.00	Dec-22	El Sol / DeFoe JV 429 Bruckner Blvd, 2nd Floor Bronx, NY 10455	N/A
HWS2020XM The Bronx & Manhattan	Installation of sidewalks, adjacent curbs and pedestrian ramps	$2,979,763.00	Mar-23	NYCDDC Arvind Patel patela@ddc.nyc.gov - 917-417-6797 patelk7@ddc.nyc.gov - 917-642-3713 3030 Thomson Avenue, LIC, NY 11101	N/A
RG-619M Staten Island	Planting of new and replacement street trees in Community Boards 1-3	$2,100,000.00	Apr-23	NYC Parks Nicholas Zito nicholas.zito@parks.nyc.gov 631-873-7942 Olmstead Center, Flushing, NY 11368	N/A
072201707FMRD Riker's Island	Restoration and rehabilitation of asphalt paving withing DOC facilities	$2,000,000.00	May-23	City of New York Deparment of Correction Captain Jason Reed jason.reed@doc.nyc.gov 646-799-6167 75-20 Astoria Blvd., East Elmhurst, NY 11370	NA
Q020-418M Queens	Reconstruction of the Highland Park Stone Bridge Overlook area	$2,975,656.00	Jun-23	NYC Parks Eric Mattes eric.mattes@parks.nyc.gov Olmstead Center, Flushing, NY 11368	N/A
HWK614D Brooklyn	Reconstruction of Bergen Avenue including water main, sewer, street lighting, and traffic work	$53,300,000.00	Jun-23	NYCDDC Marie Brandao brandaom@ddc.nyc.gov 3030 Thomson Avenue, LIC, NY 11101	Tectonic Engineers Magdalena Jakubowski jakubowskimagdalena@gmail.com
20-531 Playland Park Site Work	The rehabilitation of site paving, drainage, site lighting, underground utilities, and land-scaping throughout the park, the Fountain Plaza, and the Playland Pool Parking Lot	$11,123,948.00	Feb-24	County of Westchester 148 Martine Avenue White Plains, NY 10601	Savin Engineers 3 Campus Drive Pleasantville, NY 10570

207th Street Microtunnel (MTA/NYCTA Contract No. C-34869)	Sewer line relocation 207th Street Yard Manhattan (subcontractor to CAC Industries)	$5,100,000.00	Feb-24	CAC Industries 54-08 Vernon Blvd. LIC, NY 11101 718-729-3600	N/A
D264286	Traffic signal, sidewalk, etc. improvements at 7 locations in Fishkill, Greenburgh, Hyde Park, Kingston, and Scarsdale	$4,662,204.00	Feb-24	NYSDOT Jason Hilton Jason.Hilton@dot.ny.gov 845-476-4970	Michael Baker Engineering, Inc. 225 W 34th Street New York, NY 10122 Christopher Fowlds, PE 646-682-5505
Q345-119M	Reconstruction of Redfern Playground and the reconstruction of the adjacent NYCHA Redfern Houses open space Queens, NY	$5,765,358.00	Feb-24	NYC Parks Rohan Mendes Rohan.Mendes@parks.nyc.ogv 718-760-6759 Olmstead Center, Flushing, NY 11368	N/A
C547A (NYCDEP Contract No. C547A)	Perform all permanent and temporary buried water and sewer piping work including the 73rd Street sewer (subcontractor to Walsh Construction)	$2,458,233.00	Mar-24	Walsh Contruction Co. II, LLC Jaspreet Singh jsingh@walshgroup.com 201-744-0512 150 Clove Road - 11th Fl, Little Falls, NJ 07424	NYCDEP Bureau of Engineering Design & Constr 96-05 Horace Harding Expressway - 5th Fl Coroan, NY 11368
C5340 Gansevoort Peninsula General Construction Phase II	Installation of asphalt paving, pavers, line striping, concrete and masonry, water features, site furnishings, landscaping, railing, fencing, irrigation, signage, Bloomfield St. reconfiguration	$13,895,750.00	Mar-24	Hudson River Park Trust Tom Adams tadams@hrpt.ny.gov 917-661-8758 353 West St., New York, NY 10014	N/A
HWS2019M	Installation of sidewalks, adjacent curbs, and pedestrian ramps Manhattan	$1,796,990.00	Mar-24	NYC DDC Kiran Patel PatelK7@ddc.nyc.gov 917-642-3713 3030 Thomson Avenue, LIC, NY 11101	N/A
73720003-6611-04 Contract No. 4	Pier 42 - Comfort Station Install conduits for new electric services, water service, sewer pipes	$2,999,000.00	Mar-24	NYCEDC One Liberty Plaza, New York, NY 10006	LiRo Engineers, Inc. Daniel Bradley bradleyd@liro.com 917-299-5601 3 Aerial Way, Syosset, NY 11791
EC-SER22	Reconstruction of existing sewers Staten Island	$10,283,000.00	Apr-24	NYC DEP Korab Strikcani kstrikcani@dep.nyc.gov 646-946-8772 59-17 Junction Blvd., 17th Fl., Flulshing, NY 11373	N/A
Demarest Kill Dam Rehabilitation	Removal and replacement of the spillway, leveling and filling the dam crest, vegetation removal, installation of steel sheet pile wall w/ tie backs, removal of existing masonry wall, installation of CIP concrete wall, box culvert, stilling basin	$5,000,000.00	Apr-24	County of Rockland Kent Rigg RiggK@co.rockland.ny.us 845-638-5832 11 New Hempstead Road, New City, NY	Dewberry Engineers 600 Parsippany Road - Suite 301 Parsippany, NJ 07054 973-739-9400
22-006A	Citywide Paving & Street Improvements	$3,260,950.00	May-24	City of New Rochelle James Moran, PE jmoran@newrochelleny.com 914-654-2131 515 North Avenue New Rochelle, NY 10801	City of New Rochelle 515 North Avenue New Rochelle, NY 10801

RG-519M	Planting of new and replacement Park trees in Staten Island	$2,975,656.00	Aug-24	NYC Parks Hugh Reed, Senior Forester Hugh.Reed@parks.nyc.gov 718-760-6937 Olmstead Center, Flushing, NY 11368	N/A

CURRENT CONTRACTS

Description	Contract No.	Agency	Contract Amount	Status	Billed to Date	Work on Hand
Roma & Hett Avenues - Staten Island	HWR669C	DDC	$ 64,319,120.00	97%	$ 62,389,546.40	$ 1,929,573.60
Fresh Kills Landfill	82719SW0008	DSNY	$ 4,265,530.00	10%	$ 426,553.00	$ 3,838,977.00
Broad Channel Streets & Bulkheads - Queens	HWQ1882B	DDC	$ 55,939,587.00	85%	$ 47,548,648.95	$ 8,390,938.05
Hamilton Avenue - Brooklyn	HWK1048D	DDC	$ 27,851,244.00	52%	$ 14,482,646.88	$ 13,368,597.12
Governors Island Utilities Rehabilitation	L120	LiRo / GIT	$ 22,400,000.00	94%	$ 21,056,000.00	$ 1,344,000.00
Sewers in 73rd Place (sub to Walsh)	C547A	DEP	$ 2,458,233.00	20%	$ 491,646.60	$ 1,966,586.40
4th Avenue - Brooklyn	HWK1669A	DDC	$ 43,750,000.00	40%	$ 17,500,000.00	$ 26,250,000.00
Willoughby Square	73720003-2013	LiRo / EDC	$ 10,900,000.00	95%	$ 10,355,000.00	$ 545,000.00
East Side Coastal Resiliency Montgomery to E 15th (sub to IPC)	SANDRESM1	DDC	$ 7,800,000.00	13%	$ 1,014,000.00	$ 6,786,000.00
Pier #42, Upland Park	72730003-6601	LiRo / NYCEDC	$8,395,250	90%	$ 7,555,725.00	$ 839,525.00
Milling Contract "C"	HWSCR21C	NYCDOT	$ 29,769,653.00	50%	$ 14,884,826.50	$ 14,884,826.50
Milling Contract "E"	HWSCR21E	NYCDOT	$ 29,258,523.00	47%	$ 13,751,505.81	$ 15,507,017.19
Enhanced Waste Stations - The Bronx / Brooklyn / Manhattan	219842	NYCHA	$ 15,000,000.00	50%	$ 7,500,000.00	$ 7,500,000.00
Water Main Repair	141840	NYCHA	$ 1,125,000.00	40%	$ 450,000.00	$ 675,000.00
Water Main Repair	141839	NYCHA	$ 1,250,000.00	40%	$ 500,000.00	$ 750,000.00
GI DEP Project	GI-CONS-1	DEP	$ 17,348,066.00	42%	$ 7,286,187.72	$ 10,061,878.28
On-call Emergency Work	RQ-PV	DDC	$ 36,000,000.00	1%	$ 360,000.00	$ 35,640,000.00
College of Staten Island	3450309999	DASNY	$ 3,793,620.00	92%	$ 3,490,130.40	$ 303,489.60
132nd Street Wetlands / Extension	64350005	Gilbane / EDC	$ 25,200,000.00	70%	$ 17,640,000.00	$ 7,560,000.00
Kelly Park Playground Reconstruction - Brooklyn	B051-120M	NYC Parks	$ 10,000,000.00	75%	$ 7,500,000.00	$ 2,500,000.00
Paving - Staten Island	RG-120M	NYC Parks	$ 7,500,000.00	50%	$ 3,750,000.00	$ 3,750,000.00
Equipment Rental	392339	MTA	$ 8,092,861.00	9%	$ 728,357.49	$ 7,364,503.51
Reconstruction of Existing Sewers - Brooklyn	EC-SEKS23	DDC	$ 10,884,314.00	95%	$ 10,340,098.30	$ 544,215.70
Henry Hudson Parkway Retaining Wall	D264916	NYSDOT	$ 6,792,886.00	60%	$ 4,075,731.60	$ 2,717,154.40
Debris Removal Demand Response	D264880	NYSDOT	$ 19,887,000.00	3%	$ 596,610.00	$ 19,290,390.00
Pavement Repairs NE Thruway I-95	D214909	NYS Thruway	$ 7,897,125.00	65%	$ 5,133,131.25	$ 2,763,993.75
Reconstruction of Existing Sewers - The Bronx	EC-SEX23	DDC	$ 7,249,433.00	80%	$ 5,799,546.40	$ 1,449,886.60
Reconstruction of Existing Sewers - Staten Island	EC-SER23	DDC	$ 12,200,000.00	95%	$ 11,590,000.00	$ 610,000.00
Parks Trees - Staten Island	RG-619MR	NYC Parks	$ 2,400,000.00	99%	$ 2,376,000.00	$ 24,000.00
Sidewalks - Bronx & Manhattan	HWS2021XM	DDC	$ 2,502,679.00	50%	$ 1,251,339.50	$ 1,251,339.50
Construction ROW Green Infrastructure	GKCI05-21	DDC	$ 23,617,451.00	69%	$ 16,296,041.19	$ 7,321,409.81
New Stapleton Waterfront North	59530002-01	LiRo / EDC	$ 14,585,330.00	13%	$ 1,896,092.90	$ 12,689,237.10
CSO Constr. Of Parallel Interceptor HP13	CSO-BXR-HP-009	NYC DEP	$ 44,825,000.00	5%	$ 2,241,250.00	$ 42,583,750.00
CSO Control A9.1		City of Utica	$ 3,750,000.00	95%	$ 3,562,500.00	$ 187,500.00
Duck Pond Interceptor Phase 2		Montana/East Windsor / 11	$ 1,100,000.00	20%	$ 220,000.00	$ 880,000.00
Emergency Sewer, Staten Island	EC-SER24	DDC	$ 6,817,073.00	10%	$ 681,707.30	$ 6,135,365.70
Tree Planting, Bronx	XG-423M	NYC Parks	$ 3,376,475.00	45%	$ 1,519,413.75	$ 1,857,061.25
Tree Planting, Bronx	XG-323M	NYC Parks	$ 2,965,687.00	45%	$ 1,334,559.15	$ 1,631,127.85
JFK Rehab of Airport Roadway	JFK-174.027	PANYNJ	$ 3,896,448.00	90%	$ 3,506,803.20	$ 389,644.80
Millings Contract C	HW2CR23C	NYCDOT	$ 15,968,896.00	8%	$ 1,277,511.68	$ 14,691,384.32
Pavement Repairs Rockland County	D214962	NYS Thruway	$ 18,366,748.00	5%	$ 918,337.40	$ 17,448,410.60
			$ 641,499,232.00		$ 335,277,448.37	$ 306,221,783.63

JRCRUZ

Pending Contracts

PROJECT NAME, LOCATION DESCRIPTION	CONTRACT TYPE/ DETAILS	CONTRACT AMOUNT	START DATE	OWNER REFERENCE/ TELEPHONE #	ENGINEER REFERENCE/ TELEPHONE #
BG-822M	Brooklyn Pavement Reconstruction	$9,940,000.00	Awaiting NTP	NYC Parks Olmstead Center Flushing Meadow-Corona Park Flushing , NY 11368	NYC Parks Olmstead Center Flushing Meadow-Corona Park Flushing , NY 11368
464034	Green Infrastructure construction at various NYCHA developments - Brooklyn	$9,848,583.00	Awating award	NYCHA 23-02 49th Avenue Long Island City, NY 11101	NYCHA 23-02 49th Avenue Long Island City, NY 11101
464036	Green Infrastructure construction at various NYCHA developments - Brooklyn	$10,480,880.00	Awaiting award	NYCHA 23-02 49th Avenue Long Island City, NY 11101	NYCHA 23-02 49th Avenue Long Island City, NY 11101
LSLRPBX1	Lead Service Line Replacement	$6,888,345.00	Awaiting NTP	NYC DEP 96-05 Horace Harding Expressway Flushing, NY 11373	NYC DEP 96-05 Horace Harding Expressway Flushing, NY 11373
CNYG-2423M	Bronx & Manhattan tree-damaged sidewalk reconstruction	$3,877,945.00	Aug 12 ,2024	NYC Parks Olmstead Center Flushing Meadow-Corona Park Flushing , NY 11368	NYC Parks Olmstead Center Flushing Meadow-Corona Park Flushing , NY 11368
HWS2023M	Installation of sidewalks, adjacent curbs, and pedestrian ramps - Manhattan	$4,577,339.00	Awaiting NTP	NYC DDC 3030 Thomson Avenue LIC, NY 11101	NYC DDC 3030 Thomson Avenue LIC, NY 11101
HWCSHC4D	Safe Routes to Schools The Bronx	$22,955,815.00	Awaiting award	NYC DDC 3030 Thomson Avenue LIC, NY 11101	NYC DDC 3030 Thomson Avenue LIC, NY 11101

MG-122M	Manhattan East Side Coastal Resiliency Sidewalk Bioswales Construction	$3,819,856.00	Awaiting NTP	NYC Parks Olmstead Center Flushing Meadow-Corona Park Flushing , NY 11368	NYC Parks Olmstead Center Flushing Meadow-Corona Park Flushing , NY 11368
HWPRMKT	Installation ofNon-Standard Pedestrian Ramps (including curbs and sidewalks reconstruction, pavement markings, street lighting, and traffic signal work)	$12,609,309.00	Awaiting NTP	NYC DDC 3030 Thomson Avenue LIC, NY 11101	NYC DDC 3030 Thomson Avenue LIC, NY 11101
Fort Wadsworth	Design-Build Rehabilitation of Water, Wastewater, and Stormwater Utility Systems at Fort Wadsworth, Gateway National Recreation Area Staten Island, NY	$21,500,000.00	Awaiting NTP	National Park Service 12795 W. Alameda Parkway Denver, CO 80225	National Park Service 12795 W. Alameda Parkway Denver, CO 80225
Q007-120M	Michaelis-Bayswater Park Reconstruction Beach Channel Drives, Bay 32nd Street, & Norton Avenue - Queens, NY	$27,878,175.00	Awaiting award	NYC Parks Olmstead Center Flushing Meadow-Corona Park Flushing , NY 11368	NYC Parks Olmstead Center Flushing Meadow-Corona Park Flushing , NY 11368

QUALIFICATION FORM

Name of Contractor: JRCRUZ CORP.

Name of Project: EC-SER22

Location of Project: STATEN ISLAND

Owner or Owner's representative (Architect or Engineer) who is familiar with the work performed:

Name: Korab Strickani (KStrikcani@dep.nyc.gov)

Title: Resident Engineer Phone Number: 646-946-8772

Brief description of the Project completed or the Project in progress:

RECONSTRUCTION OF EXISTING SEWERS

Was the Project performed as a prime, a subcontractor or a sub-subcontractor: Prime

Amount of Contract, Subcontract or Sub-subcontract: $6,183,740.77

Start Date and Completion Date: 6/3/22 - 6/2/23

****

Name of Contractor: JRCRUZ CORP.

Name of Project: EC-SEKS23

Location of Project: Brooklyn

Owner or Owner's representative (Architect or Engineer) who is familiar with the work performed:

Name: Iftakher Ahmed (iahmed2@dep.nyc.gov)

Title: RE Phone Number: 929-398-9512

Brief description of the Project completed or the Project in progress:

Reconstruction of existing sewers

Was the Project performed as a prime, a subcontractor or a sub-subcontractor: Prime

Amount of Contract, Subcontract or Sub-subcontract: $10,893,890

Start Date and Completion Date: 1/10/23 - 1/9/24

QUALIFICATION FORM

Name of Contractor: JRCRUZ CORP.

Name of Project: EC-SER23

Location of Project: Staten Island

Owner or Owner's representative (Architect or Engineer) who is familiar with the work performed:

Name: Korab Strikcani (kstrikcani@dep.nyc.gov)

Title: RE Phone Number: 646-946-8772

Brief description of the Project completed or the Project in progress: _____

Reconstruction of existing sewers

Was the Project performed as a prime, a subcontractor or a sub-subcontractor: Prime

Amount of Contract, Subcontract or Sub-subcontract: $12,206,260

Start Date and Completion Date: 6/3/23 - 6/2/24

****

Name of Contractor: _____

Name of Project: _____

Location of Project: _____

Owner or Owner's representative (Architect or Engineer) who is familiar with the work performed:

Name: _____

Title: _____ Phone Number: _____

Brief description of the Project completed or the Project in progress: _____

_____

Was the Project performed as a prime, a subcontractor or a sub-subcontractor: _____

Amount of Contract, Subcontract or Sub-subcontract: _____

Start Date and Completion Date: _____

FORM OF BID BOND

KNOW ALL MEN BY THESE PRESENTS. That we, _____
JRCRUZ CORP. _____

_____

hereinafter referred to as the "Principal", and _____
Liberty Mutual Insurance Company _____

_____

hereinafter referred to as the "Surety" are held and firmly bound to THE CITY OF NEW YORK, hereinafter referred to as the "CITY", or to its successors and assigns in the penal sum of _____
Ten Percent of Bid Amount

_____

($ 10% _____), Dollars lawful money of the United States, for the payment of which said sum of money well and truly to be made, we, and each of us, bind ourselves, our heirs, executors, administrators, successors and assigns, jointly and severally, firmly by these presents.

Whereas, the Principal is about to submit (or has submitted) to the City the accompanying proposal, hereby made a part hereof, to enter into a contract in writing for _____

PROJECT ID: EC-SER25 RECONSTRUCTION OF EXISTING SEWERS,
STATEN ISLAND

_____

NOW, THEREFORE, the conditions of this obligation are such that if the Principal shall not withdraw said Proposal without the consent of the City for a period of forty-five (45) days after the opening of bids and in the event of acceptance of the Principal's Proposal by the City, if the Principal shall:

(a) Within ten (10) days after notification by the City, execute in quadruplicate and deliver to the City all the executed counterparts of the Contract in the form set forth in the Contract Documents, in accordance with the proposal as accepted, and

(b) Furnish a performance bond and separate payment bond, as may be required by the City, for the faithful performance and proper fulfillment of such Contract, which bonds shall be satisfactory in all respects to the City and shall be executed by good and sufficient sureties, and

(c) In all respects perform the agreement created by the acceptance of said Proposal as provided in the Information for Bidders, bound herewith and made a part hereof, or if the City shall reject the aforesaid Proposal, then this obligation shall be null and void; otherwise to remain in full force and effect.

In the event that the Proposal of the Principal shall be accepted and the Contract be awarded to the Principal the Surety hereunder agrees subject only to the payment by the Principal of the premium therefore, if requested by the City, to write the aforementioned performance and payment bonds in the form set forth in the Contract Documents.

It is expressly understood and agreed that the liability of the Surety for any and all claims hereunder shall in no event exceed the penal amount of this obligation as herein stated.

There shall be no liability under this bond if, in the event of the acceptance of the Principal's Proposal by the City, either a performance bond or payment bond, or both, shall not be required by the City on or before the 30th day after the date on which the City signs the Contract.

The surety, for the value received, hereby stipulates and agrees that the obligations of the Surety and its bond shall in no way be impaired or affected by any postponements of the date upon which the City will receive or open bids, or by any extensions of the time within which the City may accept the Principal's Proposal, or by any waiver by the City of any of the requirements of the Information for Bidders, and the Surety hereby waives notice of any such postponements, extensions, or waivers.

IN WITNESS WHEREOF, the Principal and the Surety have hereunto set their hands and seals and such of them as are corporations have caused their corporate seals to be hereto affixed and these presents to be signed by their proper officers the 27th day of November, 2024.

(Seal)

JRCRUZ CORP. (L.S.)
Principal

By: _____
Peter Lauro, President

(Seal)

Liberty Mutual Insurance Company
Surety

By: _____
Lisa Nosal, Atty-in-fact

ACKNOWLEDGMENT OF PRINCIPAL, IF A CORPORATION

State of New Jersey County of Monmouth ss:
On this 27th day of November, 2024, before me personally came Peter Lauro to me known, who, being by me duly sworn, did depose and say that he/she/they resides at
5 Cypress Way, Colts Neck, NJ 07722
that he/she/they is the President of
JRCRUZ CORP.
the corporation described in and which executed the foregoing instrument; that he/she/they knows the seal of said corporation; that one of the seals affixed to said instrument is such seal; that it was so affixed by order of the directors of said corporation, and that he/she/they signed his name thereto by like order.

Cynthia Anne Strodel
Notary Public
State of New Jersey
Commission No. 2303118
My commission expires 07/21/2026

_____ Notary Public

ACKNOWLEDGMENT OF PRINCIPAL, IF A PARTNERSHIP

State of _____ County of _____ ss:
On this _____ day of _____, _____, before me personally appeared _____ to me known and known to me to be one of the members of the firm of _____ described in and who executed the foregoing instrument, and he/she/they acknowledged to me that he/she/they executed the same as and for the act and deed of said firm.

_____

Notary Public

ACKNOWLEDGMENT OF PRINCIPAL, IF AN INDIVIDUAL

State of _____ County of _____ ss:
On this _____ day of _____, _____, before me personally appeared _____ to me known and known to me to be the person described in and who executed the foregoing instrument and acknowledged that he/she/they executed the same.

_____

Notary Public

AFFIX ACKNOWLEDGMENTS AND JUSTIFICATION OF SURETIES

ACKNOWLEDGEMENT OF SURETY

State of New Jersey]
|-ss
County of Essex]

On November 27, 2024, before me personally came Lisa Nosal to me known, who, being by me duly sworn, did depose and say that she is an attorney-in-fact of Liberty Mutual Insurance Company the corporation described in and which executed the within instrument; that she knows the corporate seal of said corporation, and that the seal affixed to the within instrument is such corporate seal, and that she signed the said instrument and affixed the said seal as Attorney-in-Fact by authority of the Board of Directors of said corporation and by authority of this office under the Standing Resolutions thereof.

My Commission expires:

ADRIANA GIAMMICHELE
NOTARY PUBLIC
STATE OF NEW JERSEY
ID # 50216740
MY COMMISSION EXPIRES DECEMBER 08, 2028

Notary Public

This Power of Attorney limits the acts of those named herein, and they have no authority to bind the Company except in the manner and to the extent herein stated.

Liberty Mutual Insurance Company
The Ohio Casualty Insurance Company
West American Insurance Company

Certificate No: **8211045 - 973841**

POWER OF ATTORNEY

KNOWN ALL PERSONS BY THESE PRESENTS: That The Ohio Casualty Insurance Company is a corporation duly organized under the laws of the State of New Hampshire, that Liberty Mutual Insurance Company is a corporation duly organized under the laws of the State of Massachusetts, and West American Insurance Company is a corporation duly organized under the laws of the State of Indiana (herein collectively called the "Companies"), pursuant to and by authority herein set forth, does hereby name, constitute and appoint, Adriana Giammichele, Joseph W. Mallory, Lisa Nosal, Louis A. Vlahakes, Pamela J. Boyle, Robert E. Culnen

all of the city of Totowa state of NJ each individually if there be more than one named, its true and lawful attorney-in-fact to make, execute, seal, acknowledge and deliver, for and on its behalf as surety and as its act and deed, any and all undertakings, bonds, recognizances and other surety obligations, in pursuance of these presents and shall be as binding upon the Companies as if they have been duly signed by the president and attested by the secretary of the Companies in their own proper persons.

IN WITNESS WHEREOF, this Power of Attorney has been subscribed by an authorized officer or official of the Companies and the corporate seals of the Companies have been affixed thereto this 4th day of December, 2023.

Liberty Mutual Insurance Company
The Ohio Casualty Insurance Company
West American Insurance Company

By: David M. Carey, Assistant Secretary

Not valid for mortgage, note, loan, letter of credit, currency rate, interest rate or residual value guarantees.

For bond and/or Power of Attorney (POA) verification inquiries, please call 610-832-8240 or email HOSUR@libertymutual.com.

State of PENNSYLVANIA
County of MONTGOMERY ss

On this 4th day of December, 2023 before me personally appeared David M. Carey, who acknowledged himself to be the Assistant Secretary of Liberty Mutual Insurance Company, The Ohio Casualty Company, and West American Insurance Company, and that he, as such, being authorized so to do, execute the foregoing instrument for the purposes therein contained by signing on behalf of the corporations by himself as a duly authorized officer.

IN WITNESS WHEREOF, I have hereunto subscribed my name and affixed my notarial seal at Plymouth Meeting, Pennsylvania, on the day and year first above written.

Commonwealth of Pennsylvania - Notary Seal
Teresa Pastella, Notary Public
Montgomery County
My commission expires March 28, 2025
Commission number 1126044
Member, Pennsylvania Association of Notaries

By: Teresa Pastella, Notary Public

This Power of Attorney is made and executed pursuant to and by authority of the following By-laws and Authorizations of The Ohio Casualty Insurance Company, Liberty Mutual Insurance Company, and West American Insurance Company which resolutions are now in full force and effect reading as follows:

ARTICLE IV – OFFICERS: Section 12. Power of Attorney.
Any officer or other official of the Corporation authorized for that purpose in writing by the Chairman or the President, and subject to such limitation as the Chairman or the President may prescribe, shall appoint such attorneys-in-fact, as may be necessary to act in behalf of the Corporation to make, execute, seal, acknowledge and deliver as surety any and all undertakings, bonds, recognizances and other surety obligations. Such attorneys-in-fact, subject to the limitations set forth in their respective powers of attorney, shall have full power to bind the Corporation by their signature and execution of any such instruments and to attach thereto the seal of the Corporation. When so executed, such instruments shall be as binding as if signed by the President and attested to by the Secretary. Any power or authority granted to any representative or attorney-in-fact under the provisions of this article may be revoked at any time by the Board, the Chairman, the President or by the officer or officers granting such power or authority.

ARTICLE XIII – Execution of Contracts: Section 5. Surety Bonds and Undertakings.
Any officer of the Company authorized for that purpose in writing by the chairman or the president, and subject to such limitations as the chairman or the president may prescribe, shall appoint such attorneys-in-fact, as may be necessary to act in behalf of the Company to make, execute, seal, acknowledge and deliver as surety any and all undertakings, bonds, recognizances and other surety obligations. Such attorneys-in-fact subject to the limitations set forth in their respective powers of attorney, shall have full power to bind the Company by their signature and execution of any such instruments and to attach thereto the seal of the Company. When so executed such instruments shall be as binding as if signed by the president and attested by the secretary.

Certificate of Designation – The President of the Company, acting pursuant to the Bylaws of the Company, authorizes David M. Carey, Assistant Secretary to appoint such attorneys-in-fact as may be necessary to act on behalf of the Company to make, execute, seal, acknowledge and deliver as surety any and all undertakings, bonds, recognizances and other surety obligations.

Authorization – By unanimous consent of the Company's Board of Directors, the Company consents that facsimile or mechanically reproduced signature of any assistant secretary of the Company, wherever appearing upon a certified copy of any power of attorney issued by the Company in connection with surety bonds, shall be valid and binding upon the Company with the same force and effect as though manually affixed.

I, Renee C. Llewellyn, the undersigned, Assistant Secretary, The Ohio Casualty Insurance Company, Liberty Mutual Insurance Company, and West American Insurance Company do hereby certify that the original power of attorney of which the foregoing is a full, true and correct copy of the Power of Attorney executed by said Companies, is in full force and effect and has not been revoked.

IN TESTIMONY WHEREOF, I have hereunto set my hand and affixed the seals of said Companies this 27th day of November, 2024.

By: Renee C. Llewellyn, Assistant Secretary

Liberty Mutual. SURETY

LIBERTY MUTUAL INSURANCE COMPANY

FINANCIAL STATEMENT – DECEMBER 31, 2023

Assets

Cash and Bank Deposits	$1,850,245,073.00
*Bonds – U.S Government	$3,859,565,383.00
*Other Bonds	$21,048,805,773.00
*Stocks	$19,937,271,802.00
Real Estate	$122,228,711.00
Agents' Balances or Uncollected Premiums	$8,208,660,427.00
Accrued Interest and Rents	$186,906,667.00
Other Admitted Assets	$15,677,869,683.63
Total Admitted Assets	**$70,891,553,519.63**

Liabilities

Unearned Premiums	$10,298,963,305.00
Reserve for Claims and Claims Expense	$28,848,537,243.00
Funds Held Under Reinsurance Treaties	$360,714,151.00
Reserve for Dividends to Policyholders	$1,310,198.00
Additional Statutory Reserve	$296,126,000.00
Reserve for Commissions, Taxes and Other Liabilities	$7,622,413,466.63
Total	**$47,428,064,363.63**
Special Surplus Funds	$209,508,757.00
Capital Stock	$10,000,075.00
Paid in Surplus	$13,834,867,488.00
Unassigned Surplus	$9,409,112,836.00
Surplus to Policyholders	$23,463,489,156.00
Total Liabilities and Surplus	**$70,891,553,519.63**

* Bonds are stated at amortized or investment value; Stocks at Association Market Values.
The foregoing financial information is taken from Liberty Mutual Insurance Company's financial statement filed with the Massachusetts Department of Insurance.

I, TIM MIKOLAJEWSKI, Assistant Secretary of Liberty Mutual Insurance Company, do hereby certify that the foregoing is a true, and correct statement of the Assets and Liabilities of said Corporation, as of December 31, 2023, to the best of my knowledge and belief.

IN WITNESS WHEREOF, I have hereunto set my hand and affixed the seal of said Corporation at Seattle, Washington, this 8th day of March, 2024.

LIBERTY MUTUAL INSURANCE COMPANY INCORPORATED 1912 MASSACHUSETTS

Timothy A. Mikolajewski

Timothy A. Mikolajewski, Assistant Secretary

LIBERTY MUTUAL INSURANCE COMPANY INCORPORATED 1912 MASSACHUSETTS

LMS-1262/LMIC

Code	Label	Engineer's Estimate	Bid Multiplier	Total
i2_1	Multiplier Items in Bid Schedule	7580192	0.8475	6424212.72

Field type
Required Item

Department of Design and Construction

□□□ □□□□ □□ □□□□ □□R□

D□□□R□M□□□ □□D□S□□□ □□D □□□S□R□□□□□□

D□□□S□□□ □□□□□R□S□R□□□□R□

30-30 THOMSON AVENUE
LONG ISLAND CITY, NY, 11101
TEL: 718.391.1000
WEB: www.nyc.gov/ddc

TO BE FILLED IN BY THE BIDDER:

BIDDER'S NAME:

_____

_____

BID SECURITY (CIRCLE ONE):

BID BOND / CERTIFIED CHECK

NUMBER OF ADDENDUMS RECEIVED AND ATTACHED TO BID:

_____ ADDENDUMS

DDC CLIENT AGENCY:

□□□ **D□□□R□M□□□ □□**
□□□R□□M□□□□□ □R□□□□□□□□

PREPARED BY:

□□□□□S□ D□S□□□

DATE PREPARED:

□□□□□□□□□□

□□ □□M□ □ □ □ □

FOR FURNISHING ALL LABOR AND MATERIALS NECESSARY AND REQUIRED FOR:

□R□ □□□□ □D□□□□S□R□□

□□□RM□□□□□ □□R □□DD□RS
□□□□R□□□
□□R□□RM□□□□ □□D □□□M□□□ □□□DS
□R□□□□□□□ □ □□□ S□□□D□□□

R□□□□S□R□□□□□□ □□ □□S□□□ S□□ □RS□
S□□□□□ □S□□□D

TOGETHER WITH ALL WORK INCIDENTAL THERETO

□□R□□□□ □□S□□□□□ □S□□□D
□□□□ □□ □□□ □□R□

CITY OF NEW YORK

DEPARTMENT OF DESIGN AND CONSTRUCTION

INFORMATION FOR BIDDERS

December 2021

THIS PAGE INTENTIONALLY LEFT BLANK

CITY OF NEW YORK
DEPARTMENT OF DESIGN AND CONSTRUCTION

INFORMATION FOR BIDDERS

TABLE OF CONTENTS

1.	Description and Location of Work	1
2.	Time and Place for Receipt of Bids	1
3.	Definitions	1
4.	Invitation For Bids and Contract Documents	1
5.	Pre-Bid Conference	1
6.	Agency Contact	1
7.	Bidder's Oath	1
8.	Examination and Viewing of Site, Consideration of Other Sources of Information and Changed Conditions	2
9.	Examination of Proposed Contract	2
10.	Form of Bid	2
11.	Irrevocability of Bid	3
12.	Acknowledgment of Amendments	3
13.	Bid Samples and Descriptive Literature	3
14.	Proprietary Information/Trade Secrets	3
15.	Pre-Opening Modification or Withdrawal of Bids	3
16.	Bid Evaluation and Award	3
17.	Late Bids, Late Withdrawals and Late Modifications	3
18.	Withdrawal of Bids.	3
19.	Mistake in Bids	4
20.	Low Tie Bids	4
21.	Rejection of Bids	5
22.	Right to Appeal Determinations of Non-Responsiveness or Non-Responsibility and Right to Protest Solicitations and Award	5
23.	Affirmative Action and Equal Employment Opportunity	5
25.	Complaints About the Bid Process	6
26.	Bid, Performance and Payment Security	6
27.	Failure to Execute Contract	7
28.	Bidder Responsibilities and Qualifications	7
29.	Employment Report	7
30.	Labor Law Requirements	8
31.	Insurance	8
32.	Lump Sum Contracts	8
33.	Unit Price Contracts	8

34. Excise Tax 9
35. Licenses and Permits 9
36. Multiple Prime Contractors 9
37. Locally Based Enterprise Requirements (LBE) 9
38. Bid Submission Requirements 11
39. Comptroller's Certificate 11
40. Procurement Policy Board Rules 11
41. DDC Safety Requirements 11

1. Description and Location of Work

The description and location of the work for which bids are requested are specified in the PASSPort RFx field "Description".

2. Time and Place for Receipt of Bids

Sealed bids shall be received on or before the date and hour specified in the PASSPort RFx, at which time they will be publicly opened and read aloud in the presence of the Commissioner or the Commissioner's or her representative, and any bidders who may desire to be present.

3. Definitions

The definitions set forth in the Procurement Policy Board Rules shall apply to this Invitation For Bids.

4. Invitation For Bids and Contract Documents

(A) Except for titles, sub-titles, headings, running headlines, tables of contents and indices (all of which are printed herein merely for convenience) the following, except for such portions thereof as may be specifically excluded, shall be deemed to be part of the Contract and the Invitation for Bids.

(1) All provisions required by law to be inserted in this Contract, whether actually inserted or not

(2) The Contract Drawings and Specifications

(3) The General Conditions, the General Requirements and the Special Conditions, if any

(4) The Contract

(5) The Information for Bidders; Request for Proposals; Notice of Solicitation and Proposal For Bids; Bid or Proposal, and the Bid Booklet

(6) The Budget Director's Certificate; all Addenda issued prior to the receipt of the bids; the Notice of Award; Performance and Payment Bonds, if required; and the Notice to Proceed with the Work.

(B) For particulars as to this procurement, including quantity and quality of the purchase, extent of the work or labor to be performed, delivery and performance schedule, and any other special instructions, prospective bidders are referred to the Invitation For Bids Documents. A copy of such documents can be obtained in the PASSPort RFx.

5. Pre-Bid Conference

A pre-bid conference shall be held as set forth in the PASSPort RFx. Nothing stated at the pre-bid conference shall change the terms or conditions of the Invitation For Bids Documents, unless a change is made by written amendment as provided in Section 9 below. Failure to attend a mandatory pre-bid conference shall constitute grounds for the rejection of the bid.

6. Agency Contact

Any questions or correspondence relating to this bid solicitation shall be addressed to the Agency Contact person specified in the PASSPort RFx.

7. Bidder's Oath

(A) The bid shall be properly signed by an authorized representative of the bidder and the bid shall be verified by the written oath of the authorized representative who signed the bid, that the several matters stated and information furnished therein are in all aspects true.

(B) A materially false statement willfully or fraudulently made in connection with the bid or any of the forms completed and submitted with the bid may result in the termination of any Contract between the City and the Bidder. As a result, the Bidder may be barred from participating in future City contracts as well as be subject to possible criminal prosecution.

8. Examination and Viewing of Site, Consideration of Other Sources of Information and Changed Conditions

(A) Pre-Bidding (Investigation) Viewing of Site - Bidders must carefully view and examine the site of the proposed work, as well as its adjacent area, and seek other usual sources of information, for they will be conclusively presumed to have full knowledge of any and all conditions on, about or above the site relating to or affecting in any way the performance of the work to be done under the Contract which were or should have been indicated to a reasonably prudent bidder. To arrange a date for visiting the work site, bidders are to contact the Agency Contact person specified in The PASSPort RFx.

(B) Should the contractor encounter during the progress of the work subsurface conditions at the site materially differing from any shown on the Contract Drawings or indicated in the Specifications or such subsurface conditions as could not reasonably have been anticipated by the contractor and were not anticipated by the City, which conditions will materially affect the cost of the work to be done under the Contract, the attention of the Commissioner must be called immediately to such conditions before they are disturbed. The Commissioner shall thereupon promptly investigate the conditions. If the Commissioner finds that they do so materially differ, or that they could not reasonably have been anticipated by the contractor and were not anticipated by the City, the Contract may be modified with the Commissioner's written approval.

9. Examination of Proposed Contract

(A) Request for Interpretation or Correction: Prospective bidders must examine the Contract Documents carefully and before bidding must request the Commissioner in writing for an interpretation or correction of every patent ambiguity, inconsistency or error therein which should have been discovered by a reasonably prudent bidder. Such interpretation or correction, as well as any additional contract provisions the Commissioner may decide to include, will be issued in writing by the Commissioner as an addendum to the Contract, which will be transmitted to each person recorded as having received a copy of the Contract Documents from the Department. Transmission of such addendum will be by mail, e-mail, facsimile or hand delivery. Such addendum will also be posted at the place where the Contract Documents are available for the inspection of prospective bidders. Upon transmission as provided for herein, such addendum shall become a part of the Contract Documents, and binding on all bidders, whether or not actual notice of such addendum is shown.

(B) Only Commissioner's Interpretation or Correction Binding: Only the written interpretation or correction so given by the Commissioner shall be binding, and prospective bidders are warned that no other officer, agent or employee of the City is authorized to give information concerning, or to explain or interpret, the Contract.

(C) Documents given to a subcontractor for the purpose of soliciting the subcontractor's bid shall include either a copy of the bid cover sheet or a separate information sheet setting forth the project name, the Contract number (if available), the contracting agency and the Project's location.

10. Form of Bid

Each bid must be submitted upon the prescribed form and must contain: a) the name, residence and place of business of the person or persons making the same; b) the names of all persons interested therein, and if no other person is so interested, such fact must be distinctly stated; c) a statement to the effect that it is made without any connection with any other person making a bid for the same purpose and that it is in all respects fair and without collusion or fraud; d) a statement that no Council member or other officer or employee or person whose salary is payable in whole or part from the City Treasury is directly or indirectly interested therein or in the supplies, materials or equipment and work or labor to which it relates, or in any portion of the profits thereof; e) a statement that the bidder is not in arrears to the City or to any agency upon a debt or contract or taxes, and is not a defaulter as surety or otherwise upon any obligation to the City to any agency thereof, except as set forth in the bid.

THE BID SHALL BE TYPEWRITTEN OR WRITTEN LEGIBLY IN INK. THE BID SHALL BE SIGNED IN INK. ERASURES OR ALTERATIONS SHALL BE INITIALED BY THE SIGNER IN INK. FAILURE TO CONFORM TO THE REQUIREMENTS OF THIS SECTION 10 SHALL RESULT IN THE REJECTION OF THE BID.

11. Irrevocability of Bid

The prices set forth in the bid cannot be revoked and shall be effective until the award of the Contract, unless the bid is withdrawn as provided for in Sections 15 and 18 below.

12. Acknowledgment of Amendments

The receipt of any amendment to the Contract Documents shall be acknowledged by the bidder in its bid submission.

13. Bid Samples and Descriptive Literature

Bid samples and descriptive literature shall not be submitted by the bidder, unless expressly requested elsewhere in the Contract or Contract Documents. Any unsolicited bid samples or descriptive literature which are submitted shall not be examined or tested and shall not be deemed to vary any of the provisions of this Contract.

14. Proprietary Information/Trade Secrets

(A) The bidder shall identify those portions of the bid which it deems to be confidential, proprietary information or trade secrets, and provide justification why such materials shall not be disclosed by the City. All such materials shall be clearly indicated by stamping the pages on which such information appears, at the top and bottom thereof with the word "Confidential". Such materials stamped "Confidential" must be easily separable from the non-confidential sections of the bid.

(B) All such materials so indicated shall be reviewed by the Agency and any decision not to honor a request for confidentiality shall be communicated in writing to the bidder. For those bids which are unsuccessful, all such confidential materials shall be returned to the bidder. Prices, makes and model or catalog numbers of the items offered, deliveries, and terms of payment shall be publicly available after bid opening, regardless of any designation of confidentiality made by the bidder.

15. Pre-Opening Modification or Withdrawal of Bids

Bids may be modified or withdrawn by written notice received in the office designated in the PASSPort RFx, before the time and date set for the bid opening. If a bid is withdrawn in accordance with this Section, the bid security, if any, shall be returned to the bidder.

16. Bid Evaluation and Award

In accordance with the New York City Charter, the Procurement Policy Board Rules and the terms and conditions of this Invitation For Bids, this Contract shall be awarded, if at all, to the responsible bidder whose bid meets the requirements and evaluation criteria set forth in the Invitation For Bids, and whose bid price is either the most favorable bid price or, if the Invitation For Bids so states, the most favorable evaluated bid price. A bid may not be evaluated for any requirement or criterion that is not disclosed in the Invitation For Bids.

Restriction: No negotiations with any bidder shall be allowed to take place except under the circumstances and in the manner set forth in Section 21. Nothing in this Section shall be deemed to permit a contract award to a bidder submitting a higher quality item than that designated in the Invitation For Bids, if that bid is not also the most favorable bid.

17. Late Bids, Late Withdrawals and Late Modifications

Any bid received at the place designated in the solicitation after the time and date set for receipt of bids is late and shall not be considered. Any request for withdrawal or modification received at the place designated in the solicitation after the time and date set for receipt of bids is late and shall not be considered. The exception to this provision is that a late modification of a successful bid that makes the bid terms more favorable to the City shall be considered at any time it is received.

18. Withdrawal of Bids.

Except as provided for in Section 15, above, a bidder may not withdraw its bid before the expiration of forty-five (45) days after the date of the opening of bids; thereafter, a bidder may withdraw its bid only in writing and in advance of an actual award. If within sixty (60) days after the execution of the Contract, the Commissioner fails to fix the date

for commencement of work by written notice to the bidder, the bidder at the bidder's option, may ask to be relieved of the bidder's obligation to perform the work called for by written notice to the Commissioner. If such notice is given to the Commissioner, and the request to withdraw is granted, the bidder waives all claims in connection with this Contract.

19. Mistake in Bids

(A) Mistake Discovered Before Bid Opening: A bidder may correct mistakes discovered before the time and date set for bid opening by withdrawing or correcting the bid as provided in Section 15 above.

(B) Mistakes Discovered Before Award

(1) In accordance with General Municipal Law (Section 103, subdivision 11), where a unilateral error or mistake is discovered in a bid, such bid may be withdrawn upon written approval of the Agency Chief Contracting Officer if the following conditions are met:

(a) The mistake is known or made known to the agency prior to the awarding of the Contract or within 3 days after the opening of the bid, whichever period is shorter; and

(b) The price bid was based upon an error of such magnitude that enforcement would be unconscionable; and

(c) The bid was submitted in good faith and the bidder submits credible evidence that the mistake was a clerical error as opposed to a judgment error; and

(d) The error in the bid is actually due to an unintentional and substantial arithmetic error or an unintentional omission of a substantial quantity of work, labor, material or services made directly in the compilation of the bid, which unintentional arithmetic error or unintentional omission can be clearly shown by objective evidence drawn from inspection of the original work paper, documents, or materials used in the preparation of the bid sought to be withdrawn; and

(e) It is possible to place the agency in the same position as existed prior to the bid.

(2) Unless otherwise required by law, the sole remedy for a bid mistake in accordance with this Article shall be withdrawal of the bid, and the return of the bid bond or other security, if any, to the bidder. Thereafter, the agency may, in its discretion, award the Contract to the next lowest bidder or rebid the Contract. Any amendment to or reformation of a bid or a Contract to rectify such an error or mistake therein is strictly prohibited.

(3) If the mistake and the intended correct bid are clearly evident on the face of the bid document, the bid shall be corrected to the intended correct bid and may not be withdrawn. Examples of mistakes that may be corrected are typographical errors, errors in extending unit prices, transposition errors and arithmetical errors.

20. Low Tie Bids

(A) When two or more low responsive bids from responsible bidders are identical in price, meeting all the requirements and criteria set forth in the Invitation For Bids, the Agency Chief Contracting Officer will break the tie in the following manner and order of priority:

(1) Award to a certified New York City small, minority or woman-owned business entity bidder;

(2) Award to a New York City bidder;

(3) Award to a certified New York State small, minority or woman-owned business bidder;

(4) Award to a New York State bidder.

(B) If two or more bidders still remain equally eligible after application of paragraph (A) above, award shall be made by a drawing by lot limited to those bidders. The bidders involved shall be invited to attend the drawing. A witness shall be present to verify the drawing and shall certify the results on the bid tabulation sheet.

21. Rejection of Bids

(A) Rejection of Individual Bids: The Agency may reject a bid if:

(1) The bidder fails to furnish any of the information required pursuant to Section 24 or 28 hereof; or if

(2) The bidder is determined to be not responsible pursuant to the Procurement Policy Board Rules; or if

(3) The bid is determined to be non-responsive pursuant to the Procurement Policy Board Rules; or if

(4) The bid, in the opinion of the Agency Chief Contracting Officer, contains unbalanced bid prices and is thus non-responsive, unless the bidder can show that the prices are not unbalanced for the probable required quantity of items, or if the imbalance is corrected pursuant to Section 15.

(B) Rejection of All Bids: The Agency, upon written approval by the Agency Chief Contracting Officer, may reject all bids and may elect to resolicit bids if in its sole opinion it shall deem it in the best interest of the City so to do.

(C) Rejection of All Bids and Negotiation With All Responsible Bidders: The Agency Head may determine that it is appropriate to cancel the Invitation For Bids after bid opening and before award and to complete the acquisition by negotiation. This determination shall be based on one of the following reasons:

(1) All otherwise acceptable bids received are at unreasonable prices, or only one bid is received and the Agency Chief Contracting Officer cannot determine the reasonableness of the bid price, or no responsive bid has been received from a responsible bidder; or

(2) In the judgment of the Agency Chief Contracting Officer, the bids were not independently arrived at in open competition, were collusive, or were submitted in bad faith.

(B) When the Agency has determined that the Invitation for Bids is to be canceled and that use of negotiation is appropriate to complete the acquisition, the contracting officer may negotiate and award the Contract without issuing a new solicitation, subject to the following conditions:

(1) prior notice of the intention to negotiate and a reasonable opportunity to negotiate have been given by the contracting officer to each responsible bidder that submitted a bid in response to the Invitation for Bids;

(2) the negotiated price is the lowest negotiated price offered by a responsible bidder; and

(3) the negotiated price is lower than the lowest rejected bid price of a responsible bidder that submitted a bid in response to the Invitation for Bids.

22. Right to Appeal Determinations of Non-Responsiveness or Non-Responsibility and Right to Protest Solicitations and Award

The bidder has the right to appeal a determination of non-responsiveness or non-responsibility and has the right to protest a solicitation and award. For further information concerning these rights, the bidder is directed to the Procurement Policy Board Rules.

23. Affirmative Action and Equal Employment Opportunity

This Invitation For Bids is subject to applicable provisions of Federal, State and Local Laws and executive orders requiring affirmative action and equal employment opportunity.

24. PASSPort COMPLIANCE

All vendors that intend to do business with the City of New York must complete a disclosure process in order to be considered for a contract. This disclosure process was formerly completed using Vendor Information Exchange System (VENDEX) paper-based forms. The City of New York has moved collection of vendor disclosure information online. In early August 2017, the New York City Mayor's Office of Contract Services (MOCS) launched the Procurement and Sourcing Solutions Portal (PASSPort), a new online procurement system that replaced the paper-VENDEX process. In anticipation of awards, all bidders must create online accounts in the new PASSPort system, and

file all disclosure information using PASSPort. Paper submissions, including certifications of no changes to existing VENDEX packages, will not be accepted in lieu of complete online filings using PASSPort.

All vendors that intend to do business with the City, but specifically those that fall into any of the following categories, are required to enroll:

- Have a pending award with a City Agency; or
- Hold a current contract with a City Agency and have either an expiring VENDEX or expiring Certificate of No Change.

The Department of Design and Construction (DDC) and MOCS hereby notifies all proposers that the PASSPort system is available, and that disclosure filing completion is required prior to any award through this competitive bid.

To enroll in PASSPort and to access the PASSPort website (including online training), please visit www.nyc.gov/passport. Contact MOCS at passport@mocs.nyc.gov for additional information and technical support.

25. Complaints About the Bid Process

The New York City Comptroller is charged with the audit of contracts in New York City. Any vendor who believes that there has been unfairness, favoritism or impropriety in the bid process should inform the Comptroller, Office of Contract Administration, One Centre Street, Room 835, New York, New York; telephone number (212)669-2323.

26. Bid, Performance and Payment Security

(A) Bid Security: Each bid must be accompanied by bid security in an amount and type specified in the PASSPort RFx questionnaire. The bid security shall assure the City of New York of the adherence of the bidder to its proposal, the execution of the Contract, and the furnishing of Performance and Payment Bonds by the bidder, if required in the PASSPort RFx. Bid security shall be returned to the bidder as follows:

(1) Within ten (10) days after the bid opening, the Comptroller will be notified to return the deposits of all but the three (3) lowest bidders. Within five (5) days after the award, the Comptroller will be notified to return the deposits of the remaining two unsuccessful bidders.

(2) Within five (5) days after the execution of the Contract and acceptance of the Contractor's bonds, the Comptroller will be notified to return the bid security of the successful bidder or, if performance and payment bonds are not required, only after the sum retained under Article 21 of the Contract equals the amount of the bid security.

(3) Where all bids are rejected, the Comptroller will be notified to return the deposit of the three (3) lowest bidders at the time of rejection.

(B) Performance and Payment Security: Performance and Payment Security must be provided in an amount and type specified in the PASSPort RFx. The performance and payment security shall be delivered by the contractor prior to or at the time of execution of the Contract. If a contractor fails to deliver the required performance and payment security, its bid security shall be enforced, and an award of Contract may be made to the next lowest responsible and responsive bidder, or the contract may be rebid.

(C) Acceptable Types of Security: Acceptable types of security for bids, performance, and payment shall be limited to the following:

(1) a one-time bond in a form satisfactory to the City;

(2) a bank certified check or money order;

(3) obligations of the City of New York; or

(4) other financial instruments as determined by the Office of Construction in consultation with the Comptroller.

Whenever the successful bidder deposits obligations of the City of New York as performance and payment security, the Comptroller may sell and use the proceeds thereof for any purpose for which the principal or

surety on such bond would be liable under the terms of the Contract. If the money is deposited with the Comptroller, the successful bidder shall not be entitled to receive interest on such money from the City.

(D) Form of Bonds: Security provided in the form of bonds must be prepared on the form of bonds authorized by the City of New York. Forms for bid, performance, and payment bonds are included in the Invitation for Bids Documents. Such bonds must have as surety thereunder such surety company or companies as are: (1) approved by the City of New York; (2) authorized to do business in the State of New York, and (3) approved by the Department of the Treasury of the United States. Premiums for any required bonds must be included in the base bid.

The bidder is advised that submission of a bid bond where the surety on such bond fails to meet the criteria set forth herein, shall result in the rejection of the bid as non-responsive.

The Department of the Treasury of the United States advises that information concerning approved surety companies may be obtained as follows: (1) from the Government Printing Office at 215-364-6465; (2) through the Internet at https://www.fiscal.treasury.gov/surety-bonds/.

(E) Power of Attorney: Attorneys in fact who sign bid, performance, or payment bonds must file with each bond a certified copy of their power of attorney to sign said bonds.

27. Failure to Execute Contract

In the event of failure of the successful bidder to execute the Contract and furnish the required security within ten (10) days after notice of the award of the Contract, the deposit of the successful bidder or so much thereof as shall be applicable to the amount of the award made shall be retained by the City, and the successful bidder shall be liable for and hereby agrees to pay on demand the difference between the price bid and the price for which such Contract shall be subsequently awarded, including the cost of any required reletting and less the amount of such deposit. No plea of mistake in such accepted bid shall be available to the bidder for the recovery of the deposit or as a defense to any action based upon such accepted bid. Further, should the bidder's failure to comply with this Section cause any funding agency, body or group (Federal, State, City, Public, Private, etc.) to terminate, cancel or reduce the funding on this project, the bidder in such event shall be liable also to the City for the amount of actual funding withdrawn by such agency on this project, less the amount of the forfeited deposit.

28. Bidder Responsibilities and Qualifications

(A) Bidders must include with their bids all information necessary for a determination of bidder responsibility, as set forth in the Specifications.

(B) The Agency may require any bidder or prospective bidder to furnish all books of account, records, vouchers, statements or other information concerning the bidder's financial status for examination as may be required by the Agency to ascertain the bidder's responsibility and capability to perform the Contract. If required, a bidder must also submit a sworn statement setting forth such information as the Agency may require concerning present and proposed plant and equipment, the personnel and qualifications of the bidder’s working organizations, prior experience and performance record.

(C) Oral Examination on Qualifications: In addition thereto, and when directed by the Agency, the bidder, or a responsible officer, agent or employee of the bidder, must submit to an oral examination to be conducted by the Agency in relation to the bidder’s proposed tentative plan and schedule of operations, and such other matters as the Agency may deem necessary in order to determine the bidder's ability and responsibility to perform the work in accordance with the Contract. Each person so examined must sign and verify a stenographic transcript of such examination noting thereon such corrections as such person may desire to make.

(D) If the bidder fails or refuses to supply any of the documents or information set forth in paragraph (B) hereof or fails to comply with any of the requirements thereof, the Agency may reject the bid.

29. Employment Report

In accordance with Executive Order No. 50 (1980) as modified by Executive Order 108 (1986), the filing of a

completed Employment Report (ER) is a requirement of doing business with the City of New York for construction contractors with contracts of $1,000,000 or more and subcontractors with construction subcontracts of $750,000 or more. The required forms and information are included in the PASSPort Vendor Profile.

30. Labor Law Requirements

(A) General: The successful bidder will be required to comply strictly with all Federal, State and local labor laws and regulations.

(B) New York State Labor Law: This Contract is subject to New York State Labor Law Section 220, which requires that construction workers on the site be paid prevailing wages and supplements. The Contractor is reminded that all wage provisions of this Contract will be enforced strictly and failure to comply will be considered when evaluating performance. Noncompliance may result in the contractor being debarred by the City from future contracts. Complaints filed with the Comptroller may result in decisions which may debar a contractor from bidding contracts with any state governmental entity and other political subdivisions.

(C) Records: The Contractor is expected to submit accurate payroll reports and other required documents and verify attendance and job classifications being utilized in compliance with the law, Contract provisions and agency procedures.

31. Insurance

(A) Bidders are advised that the insurance requirements contained herein are regarded as material terms of the Contract. As required by Article 22 of the Contract, the contractor must effect and maintain with companies licensed and authorized to do business in the State of New York, the types of insurance set forth therein, when required by and in the amounts set forth in Schedule A of the General Conditions. Such required insurance must be provided from the date the contractor is ordered to commence work and up to the date of final acceptance of all required work.

(B) The contractor must, within ten days of receipt of the notice of award, submit the following insurance documentation: (a) original certificate of insurance for general liability in the amount required by Schedule A of the General Conditions, and (b) original certificates of insurance or other proof of coverage for workers' compensation and disability benefits, as required by Section 57 of the New York State Workers' Compensation Law and Section 220 of the Disability Benefits Law.

32. Lump Sum Contracts

(A) Comparison of Bids: Bids on Lump Sum Contracts will be compared on the basis of the lump sum price bid, adjusted for alternate prices bid, if any.

(B) Lump Sum Bids for "General Construction Work" which include excavation shall include all necessary excavation work defined in the Specifications as being included in the lump sum bid. The bidder shall also bid a unit price for the additional cost of excavating material which is defined in the Specifications as excavation for which additional payment will be made. The total estimated additional cost of removing such material will be taken as the quantity set forth in the Engineer's Estimate multiplied by the unit price bid. This total estimated cost of additional excavation shall be added to the lump sum bid for the General Construction Work for the purpose of comparing bids to determine the low bidder.

(C) Variations from Engineer's Estimate: The Engineer's Estimate of the quantity of excavation for which additional payment will be made is approximate only and is given solely to be used as a uniform basis for the comparison of bids and such estimate is not to be considered as part of this contract. The quantities actually required to complete the contract work may be more or less than the quantities in the Engineer's Estimate and, if so, no action for damages or for loss of profits shall accrue to the contractor by reason thereof.

33. Unit Price Contracts

(A) Comparison of Bids: Bids on Unit Price Contracts will be compared on the basis of a total estimated price,

arrived at by taking the sum of the estimated quantities of such items, in accordance with the Engineer's Estimate of Quantities set forth in the Bid Schedule, multiplied by the corresponding unit prices, and including any lump sum bids on individual items.

(B) Variations from Engineer's Estimate: Bidders are warned that the Engineer's Estimate of Quantities on the various items of work and materials is approximate only, given solely to be used as a uniform basis for the comparison of bids, and is not be considered part of this contract. The quantities actually required to complete the contract work may be less or more than so estimated, and if so, no action for damages or for loss of profits shall accrue to the contractor by reason thereof.

(C) Overruns: The terms and conditions applicable to overruns of unit price items are set forth in Article 26 of the Contract.

34. Excise Tax

Bidders are referred to the Specifications for information on Federal Excise Tax exemptions.

35. Licenses and Permits

The successful bidder will be required to obtain all necessary licenses and permits necessary to perform the work.

36. Multiple Prime Contractors

If more than one prime contractor will be involved on this project, all contractors are required to examine the Invitation for Bid packages for all other parts of the project.

37. Locally Based Enterprise Requirements (LBE)

This Contract is subject to the requirements of Administrative Code, Section 6-108.1, and the regulations promulgated thereunder. No construction contract will be awarded unless and until these requirements have been complied with in their entirety. The bidder is advised of the provisions set forth below, as well as the provisions with respect to the Locally Based Enterprise Program contained in Article 67 of the Contract. The contractor is advised that:

(A) If any portion of the Contract is subcontracted, not less than ten percent of the total dollar amount of the contract shall be awarded to locally based enterprises ("LBEs"); except, where less than ten percent of the total dollar amount of the Contract is subcontracted, such lesser percentage shall be so awarded.

(B) No contractor shall require performance and payment bonds from LBE subcontractors.

(C) No Contract shall be awarded unless the contractor first identifies in its bid:

(1) the percentage, dollar amount and type of work to be subcontracted; and

(2) the percentage, dollar amount and type of work to be subcontracted to LBEs.

(D) Within ten calendar days after notification of low bid, the apparent low bidder shall submit an "LBE Participation Schedule" to the contracting agency. If such schedule does not identify sufficient LBE subcontractors to meet the requirements of Administrative Code Section 6-108.1, the apparent low bidder shall submit documentation of its good faith efforts to meet such requirements.

(1) The "LBE Participation Schedule" shall include:

(a) the name and address of each LBE that will be given a subcontract,

(b) the percentage, dollar amount and type of work to be subcontracted to the LBE, and

(c) the dates when the LBE subcontract work will commence and end.

(2) The following documents shall be attached to the "LBE Participation Schedule":

(a) verification letters from each subcontractor listed in the "LBE Participation Schedule" stating that the LBE will enter into a formal agreement for work,

(b) certification documents of any proposed LBE subcontractor which is not on the LBE certified list, and

(c) copies of the certification letter of any proposed subcontractor which is an LBE.

(3) Documentation of good faith efforts to achieve the required LBE percentage shall include as appropriate but not limited to the following:

(a) attendance at prebid meetings, when scheduled by the agency, to advise bidders of contract requirements;

(b) advertisement where appropriate in general circulation media, trade association publications and small business media of the specific subcontracts that would be at least equal to the percentage goal for LBE utilization specified by the contractor;

(c) written notification to association of small, minority and women contractors soliciting specific subcontractors;

(d) written notification by certified mail to LBE firms that their interest in the contract is solicited for specific work items and their estimated values;

(e) demonstration of efforts made to select portions of the work for performance by LBE firms in order to increase the likelihood of achieving the stated goal;

(f) documented efforts to negotiate with LBE firms for specific subcontracts, including at a minimum:

(i) The names, address and telephone numbers of LBE firms that are contacted;

(ii) A description of the information provided to LBE firms regarding the plans and specifications for portions of the work to be performed;

(iii) Documentation showing that no reasonable price can be obtained from LBE firms;

(iv) A statement of why agreements with LBE firms were not reached;

(g) a statement of the reason for rejecting any LBE firm which the contractor deemed to be unqualified; and

(h) documentation of efforts made to assist the LBE firms contacted that needed assistance in obtaining required insurance.

(E) Unless otherwise waived by the Commissioner with the approval of the Office of Economic and Financial Opportunity, failure of a proposed contractor to provide the information required by paragraphs (C) and (D) above may render the bid non-responsive and the Contract may not be awarded to the bidder. If the contractor states that it will subcontract a specific portion of the work, but can demonstrate despite good faith efforts it cannot achieve its required LBE percentage for subcontracted work until after award of Contract, the Contract may be awarded, subject to a letter of compliance from the contractor stating that it will comply with Administrative Code Section 6-108.1 and subject to approval by the Commissioner. If the contractor has not met its required LBE percentage prior to award, the contractor shall demonstrate that a good faith effort has been made subsequent to award to obtain LBEs on each subcontract until its meets the required percentage.

(F) When a bidder indicates prior to award that no work will be subcontracted, no work may be subcontracted without the prior written approval of the Commissioner, which shall be granted only if the contractor in good faith seeks LBE subcontractors at least six weeks prior to the start of work.

(G) The contractor may not substitute or change any LBE which was identified prior to award of the contract without the written permission of the Commissioner. The contractor shall make a written application to the Commissioner for permission to make such substitution or change, explaining why the contractor needs to change its LBE subcontractor and how the contractor will meet its LBE subcontracting requirement. Copies of such application must be served on the originally identified LBE by certified mail return receipt requested,

as well as the proposed substitute LBE. The Commissioner shall determine whether or not to grant the contractor's request for substitution.

38. Bid Submission Requirements

The Bid Submission Requirements are set forth in the PASSPort RFx.

39. Comptroller's Certificate

This Contract shall not be binding or of any force unless it is registered by the Comptroller in accordance with Section 328 of the City Charter and the Procurement Policy Board Rules. This Contract shall continue in force only after annual appropriation of funds by the City of New York and certification as hereinabove set forth.

40. Procurement Policy Board Rules

This Invitation For Bids is subject to the Rules of the Procurement Policy Board of the City of New York. In the event of a conflict between said Rules and a provision of this Invitation For Bids, the Rules shall take precedence.

41. DDC Safety Requirements

The DDC Safety Requirements apply to the work to be performed pursuant to the Contract. The DDC Safety Requirements are set forth on the following pages.

THIS PAGE INTENTIONALLY LEFT BLANK

CITY OF NEW YORK
DEPARTMENT OF DESIGN AND CONSTRUCTION
SAFETY REQUIREMENTS FOR CONSTRUCTION CONTRACTS

January 2020

THE DDC SAFETY REQUIREMENTS FOR CONSTRUCTION CONTRACTS INCLUDE THE FOLLOWING SECTIONS:

I. POLICY ON SITE SAFETY

II. PURPOSE

III. DEFINITIONS

IV. RESPONSIBILITIES

V. SAFETY QUESTIONNAIRE

VI. SITE SAFETY PLAN

VII. KICK-OFF/PRE-CONSTRUCTION MEETINGS AND SAFETY REVIEW

VIII. EVALUATION DURING WORK IN PROGRESS

IX. SAFETY PERFORMANCE EVALUATION

I. POLICY ON SITE SAFETY

The City of New York Department of Design and Construction (DDC) is committed to a policy of injury and illness prevention and risk management for construction work that will ensure the safety and health of the workers engaged in the projects and the protection of the general public. Therefore, it is DDC's policy that work carried out by Contractors on DDC contracts must, at a minimum, comply with the most current versions of all applicable federal, state and city laws, rules, and regulations, including without limitation:

- Code of Federal Regulations, Title 29, Part 1926 (29 CFR 1926) and applicable Sub-parts of Part 1910 – U.S. Occupational Safety and Health Administration (OSHA);
- Federal Highway Administration – Manual on Uniform Traffic Control Devices (MUTCD);
- New York Codes, Rules and Regulations (NYCRR), Title 12, Part 23 – Protection in Construction, Demolition and Excavation Operations;
- New York Codes, Rules and Regulations (NYCRR), Title 16, Part 753 – Protection of Underground Facilities;
- New York City Administrative Code, Title 28 – New York City Construction Codes;
- Rules of the City of New York, Title 15, Chapter 13 – Rules Pertaining To the Prevention of the Emission of Dust from Construction Related Activities;
- Rules of the City of New York, Title 15, Chapter 28 – Citywide Construction Noise Mitigation;
- Rules of the City of New York, Title 34 Chapter 2 – NYCDOT Highway Rules.

The Contractor will be required to comply with all new and/or revised federal, state and city laws, rules, and regulations, issued during the course of the project, at the expense of the Contractor without any additional costs to the DDC.

II. PURPOSE

The purpose of this policy is to ensure that Contractors perform their work and supervise their employees in accordance with all applicable federal, state and city rules and regulations. Further, Contractors will be expected to minimize or eliminate jobsite and public hazards, through a planning, inspection, auditing and corrective action process. The goal is to control risks so that injuries, illnesses, and accidents to contractors' employees, DDC employees and the general public, as well as damage to city-owned and private property, are reduced to the lowest level feasible.

III. DEFINITIONS

Agency Chief Contracting Officer (ACCO): The ACCO will mean the person delegated authority by the Commissioner to organize and supervise the procurement activity of subordinate Agency staff in conjunction with the City Chief Procurement Officer (CCPO).

Competent Person: As defined by OSHA, an individual who is capable of identifying existing and predictable hazards in the surroundings or working conditions that are unsanitary, hazardous, or dangerous to employees or the general public, and who has authorization to take prompt corrective measures to eliminate them. This individual will have completed, at a minimum an authorized 30-hour OSHA Construction Safety Course. The Contractor may be required to provide more than one competent person due to construction operations and based on the number of active work sites.

Construction Safety Auditor: A representative of the Office of Construction Safety who provides inspection and assessment services to enhance health and safety on all DDC construction projects. The activities of the Construction Safety Auditor include performing site audits, reviewing safety plans, reviewing construction permits, drawings, verifying Contractor's compliance with applicable federal, state and city laws, rules, regulations, and DDC Contract Safety Requirements, etc. and rendering technical advice and assistance to DDC Resident Engineers and Project Managers.

Office of Construction Safety: A unit of DDC Safety and Site Support that assesses contractor's safety on DDC jobsites and advises responsible parties of needed corrective actions.

Registered Construction Superintendent: For certain projects, as defined in New York City Construction Codes – Title 28, the contractor will provide a Construction Superintendent registered with the NYC Department of Buildings and responsible for all duties as defined in Chapter 33 of Title 1 of the Rules of the City of New York.

Contractor: For purposes of these Safety Requirements, the term "Contractor" will mean any person or entity that enters into a contract for the performance of construction work on a DDC project. The term "Contractor" will include any person or entity which enters into any of the following types of contracts: (1) a prime construction contract for a specific project, (2) a prime construction contract using the Job Order Contracting System ("JOCS Contract"), and (3) a subcontract with a CM/Builder ("First Tier Subcontract").

Daily Safety Job Briefing: Daily jobsite safety briefings, given to all jobsite personnel at project site by the Contractor before work begins and/or if hazards or potential hazards are discovered while working, with the purpose of discussing the scheduled activities for the day, the hazards related to these activities, activity specific safety procedures, and Job Hazard Analysis associated with the scheduled construction work. Daily jobsite briefings will be documented, available at the jobsite, and will include at a minimum, topics, name and signature of the person conducting the briefing session, names and signatures of attendants, name of the designated competent person, contactor's name, DDC Project ID, date, time, and location.

Director – Office of Construction Safety: Responsible for the operations of the Office of Construction Safety and the DDC Site Safety management programs.

Job Hazard Analysis (JHA): A process of identifying the major job tasks and any potential site-specific hazards that may be present during construction and establishing the means and methods to eliminate or control those hazards. A JHA will be documented, available at the jobsite and will include at a minimum work tasks, being performed, identified hazards, control methods for the identified hazards, contractor's name, DDC Project ID, location, date, name and signature of certifying person. A JHA is a living document that will be re-evaluated and revised to address new hazards and tasks that may develop and will be present at the worksite and produced upon request.

Qualified Person: As defined by OSHA, an individual who, by possession of a recognized degree, certificate, license, or professional standing, or who by extensive knowledge, training, and experience, has successfully demonstrated his or her ability to solve problems relating to the subject matter, the work, or the project. Qualified Persons are required under regulation to address issues pertaining, but without limit, to fall protection, scaffold design, maintenance and protection of traffic, and excavation protective system, among others.

Project Site: Those areas indicated in the Contract Documents where the Work is to be performed.

Project Safety Representative: The designated Project Safety Representative will have at a minimum an OSHA 30-hour Construction Safety Course and other safety training applicable to Contractor's/subcontractor's project work. This individual will be responsible to oversee safety performance of the required construction work, conduct documented daily safety inspections, and implement corrective actions to maintain a safe work site. The Project Safety Representative must have sufficient experience and skills necessary to thoroughly understand the health and safety hazards and controls and must have authority to undertake corrective actions. A dedicated full-time Project Safety Representative may be required on large projects and projects deemed by DDC to be particularly high risk. DDC reserves the right to request a dedicated full-time Project Safety Representative for any reason at any time during the course of the project at the expense of the Contractor without any additional costs to the DDC. The full-time Project Safety Representative will be present at the site during all work activities.

Resident Engineer ("RE"): Representative of the Commissioner duly designated by the Commissioner to be his/her representative at the site of the work. The RE may be a consultant retained by DDC, including a Construction Management (CM) or Resident Engineer Inspection (REI) firm. If DDC has retained a CM, REI or other consultant firm to perform management and oversite for the Project (e.g., CM-Builder, CM-Design-Builder, Project Manager, Program Manager), that CM, REI or other consultant is the Resident Engineer for purposes of these Safety Requirements.

Safety Questionnaire: Used by DDC to evaluate Contractor's current and past safety performance. It is required to be completed by all Contractors initially when submitting bids for Construction work, or when being pre-qualified

and updated annually or as requested by the DDC.

Site Safety Manager: For certain projects, as defined in New York City Construction Codes – Title 28, the Contractor will provide a Site Safety Manager with a Site Safety Manager License issued by the New York City Department of Building.

Site Safety Plan: A site-specific safety plan developed by the Contractor for a DDC project. The Site Safety Plan will identify the project work scope, identify hazards associated with the project work and include project specific safety procedures and training appropriate and necessary to complete the work. The Site Safety Plan will be submitted within 30 days from the Award Date or as otherwise directed and is subject to review and acceptance by the Office of Construction Safety prior to the commencement of work at the site.

Unsafe or Unhealthy Condition: A condition that could be potentially hazardous to the health and safety of personnel or the public, and/or damaging to equipment, machinery, property, or the environment.

Weekly Safety Meetings: Weekly jobsite safety meetings, given to all jobsite personnel by Contractor, with the purpose of discussing general safety topics and job specific requirements encountered at the DDC work site. Weekly safety meetings will be documented and will include at a minimum, topics, name and signature of the person conducting the meeting, names and signatures of attendees, contractor's name, DDC Project ID, date, and location.

Work: The construction required by the Contractor's Contract Documents whether completed or partially completed, performed by the Contractor/ subcontractors. Work refers to the furnishing of labor, furnishing and incorporating materials and equipment into the construction and providing any service required by the Contract Documents to fulfill the Contractor's obligation to complete the Project. For the purposes of these Safety Requirements, the term "Work" includes all Utility Interference work (commonly referred to as "Section U", "EP-7", and "Joint Bid" work) performed in association with this Contract.

IV. RESPONSIBILITIES

All persons who manage, perform, and provide support for construction projects will conduct operations in compliance with the requirements identified in this Policy and all applicable governing regulatory agency requirements and guidelines pertaining to safety in construction.

A. Resident Engineer

1. Review and facilitate Contractor(s) Site Safety Plan submittals to DDC for acceptability.
2. Notify the Office of Construction Safety of the commencement of construction work.
3. Develop and implement a training verification process to ensure that all CM/REI, consultant, Contractor, and subcontractor employees are properly trained. Maintain all applicable initial and refresher training records and assures documentation availability on site.
4. Maintain documentation of and attend weekly safety meetings and daily safety job briefings.
5. Assure that Contractor(s) JHA's are current to reflect the work tasks being performed, hazards, and control methods to mitigate the identified hazards. Verify that all employees at the job site are trained on the JHAs and maintain supporting documentation on site.
6. Assure adequate planning for all critical construction activities (crane operation, excavation, confined space entry, etc.) including coordination between Contractor(s) /DDC/ other Agencies as required.
7. Maintain custody of all construction related permits, plans, approvals, drawings, etc., related to the project and assure their availability on site.
8. Recognize, minimize, or eliminate jobsite and public hazards, through required planning, inspection, verification, and corrective action process.
9. Monitor the conditions at the site for conformance with the Contractor's Site Safety Plan, DDC policies, permits, and all applicable regulations and documentation that pertain to construction safety.
10. Notify the Contractor and DDC immediately upon determination of any condition or activity existing which is not in compliance with the Contractor's Site Safety Plan, applicable federal, state or local codes or any

condition that presents a potential risk of injury to the public or workers or possible damage to property. Direct the Contractor to provide such labor, materials, equipment, and supervision to remedy such conditions.

11. Notify the Office of Construction Safety and the ACCO's Insurance and Risk Management Unit of project-related accidents, incidents, and near misses as per DDC's Construction Safety Emergency and Accident Notification and Response Procedure within two (2) hours.
12. In case of an accident, incident, or near miss, RE is responsible to protect the integrity of the accident site including but not limited to: the safeguarding of all evidence, documentation of all personnel on site at the time of the accident, gather facts related to all accidents, incidents, or near miss, and prepare required DDC Construction Accident Report as per DDC's Construction Safety Emergency and Accident Notification and Response Procedure. Maintain all records pertaining to accidents, incidents, and near miss and have them available upon request.
13. Notify the Office of Construction Safety within two (2) hours of the start of an inspection by any outside/ regulatory agency personnel, including NYS, OSHA, NYC DOB or any other City/State/Federal oversight entity and forward a copy of the inspection report within one business day of its receipt.
14. Escort and assist Construction Safety Auditors during all field and record audits.
15. Report any emergency conditions to the Office of Construction Safety immediately.

Note: In addition to the responsibilities listed above, if the Resident Engineer is a CM/REI or other non-City party hired by the City to manage the Project, the Resident Engineer is also required to do the following:

16. Provide personnel who are certified and or trained appropriately for the requirements of the project.
17. Perform an investigation for any project-related accidents, incidents, and near misses. Within 24-hours of the time of the accident, incident, or near miss, the CM/REI will submit an investigation report to the Office of Construction Safety. Such report will include proposed remedial measures and implementation of corrective actions to prevent recurrence.

DDC reserves the right to request that the CM/REI replace any CM/REI personnel for any reason at any time during the project.

B. Construction Contractors

Note: For CM-Build and CM-Design-Build Projects, the CM will meet all requirements listed in this section, as well as the Resident Engineer section above.

1. Submit a completed Safety Questionnaire and other safety performance related documentation with its bid or as part of a pre-qualification package.
2. Submit a Site Safety Plan within 30 days from the Award Date or as otherwise directed. The Site Safety Plan is subject to review and acceptance by the Office of Construction Safety prior to the commencement of work at the site. The Site Safety Plan will be revised and updated as necessary during the course of the project. If requested by the Office of Construction Safety, the Site Safety Plan must be developed and submitted for approval using a web-based system, the Site Safety Plan Application (SSP App).
3. Designate and identify a Project Safety Representative in the Site Safety Plan. The Contractor will immediately notify the Office of Construction Safety, in a form and manner acceptable to the Office of Construction Safety, of any permanent change to the designated Project Safety Representative. In the event the primary designated Project Safety Representative is temporary unable to perform his or her duties, an alternate Project Safety Representative will be provided. Resumes, outlining the qualification and experience for the Project Safety Representative (s) will be included in the Site Safety Plan and available upon request. DDC reserves the right to request the Contractor to replace a Project Safety Representative for any reason at any time during the course of the project.
4. Designate and identify a Competent Person(s) in the Site Safety Plan. Contractor/subcontractor may be required to provide more than one competent person due to construction operations and based on a number of work tasks/areas. DDC reserves the right to request the Contractor to replace a Competent Person or provide additional Competent Person(s) for any reason at any time during the course of the project. The Competent Person will be present at the site during all work activities.
5. For certain projects, as defined in New York City Construction Codes – Title 28, designate and identify the Licensed Site Safety Manager or Registered Construction Superintendent. Resumes, outlining the qualification and experience for the Licensed Site Safety Manager or Registered Construction Superintendent will be included in the Site Safety Plan and available upon request. The Contractor will immediately notify the Office

of Construction Safety, in a form and manner acceptable to the Office of Construction Safety, of any permanent change to the designated Site Safety Manager and/or Construction Superintendent. In the event the primary designated Site Safety Manager or Construction Superintendent is temporarily unable to perform his or her duties, an alternate Licensed Site Safety Manager and/or Registered Construction Superintendent will be provided. The Office of Construction Safety must be informed of such change. DDC reserves the right to request the Contractor to replace Site Safety Manager or Construction Superintendent for any reason at any time during the course of the project.

6. Develop a written Job Hazard Analysis (JHA) that identifies safety hazards and control methods for project specific work tasks. A preliminary JHA will be included in the Site Safety Plan submitted by the Contractor. A JHA is a living document that will be re-evaluated and revised to address new hazards and tasks that may develop during the course of the project and will be present at the worksite and produced upon request.
7. Develop project specific safety procedures to protect employees, general public, and property during all construction activities for the duration of the project.
8. Ensure that all employees are aware of the hazards associated with the project through documented formal and informal training and/or other communications. Conduct and document new employee and site-specific safety orientation for all Contractor and subcontractor personnel to review the hazards associated with the project as identified in the Site Safety Plan and the specific safety procedures and controls that will be used to protect workers, the general public and property. The Project Safety Representative will conduct this training prior to mobilization and if necessary during the course of the project. Documentation will be provided to the RE.
9. Prior to performing any work on DDC projects all Contractor's and subcontractor's employees will, at a minimum, have successfully completed, within the previous five calendar years, an OSHA 10-hour construction safety course.

   All training records (OSHA 10-hour, flagger, scaffold, fall protection, confined space, etc.) will be provided to the RE prior to mobilization, included in the Site Safety Plan, kept current during the course of the project, and available for review.
10. Conduct and document weekly safety meetings and daily job briefing sessions for the duration of the project. Attendance at weekly safety meetings and daily job briefing sessions is mandatory. A written record of weekly safety meetings will be available upon request and job briefing sessions will be available at the worksite.
11. As part of the Site Safety Plan, prepare site specific procedures, such as maintenance and protection of traffic plan, steel erection plan, confined space program, fall protection plan, demolition plan, site specific emergency evacuation plan, etc. (if not otherwise provided in the contract documents) and comply with all of its provisions.
12. Have immediately available for review at the project site where actual construction activities are being performed all applicable documentation, including but not limited to: JHAs for work tasks being performed, all required training records, MPT plan (where applicable), Noise and Dust Mitigation Plans, excavation protective system drawings (where applicable), Emergency Evacuation plan, fall protection program (where applicable), confined space program (where applicable), all required permits, daily job briefing records, all required documentation for crane operation (where applicable), daily inspection checklist, scaffold and sidewalk drawings (when applicable), safety data sheets for chemicals in use.
13. Comply with all federal, state and local safety and health rules, laws, and regulations.
14. Comply with all provisions of the Site Safety Plan.
15. Provide, replace, and adequately maintain at or around the project site, suitable and sufficient signage, lights, barricades and enclosures (fences, sidewalk sheds, netting, bracing, etc.). The project specific MPT plan will be developed, implemented, and reviewed during the course of the project.
16. The Project Safety Representative will conduct daily safety inspections, document the inspection results, implement corrective actions for the identified hazards. Maintain the inspection records and have them available upon request.
17. **Report unsafe or unhealthy conditions to the RE as soon as practical, but no more than 24 hours after discovery, and take prompt actions to remove or abate such conditions. Should an imminent dangerous condition be discovered, Contractor will stop all work in the area of danger until corrections are made.**
18. Report all accidents, incidents and near misses involving injuries to workers or the general public, as well as property damage, to the RE within one (1) hour.
19. Following an accident or incident, unless otherwise directed, the Contractor will not remove or alter any equipment, structure, material, or evidence related to the accident or incident. Exception: Immediate emergency procedures taken to secure structures, temporary construction, operations, or equipment that pose a continued imminent danger or facilitate assistance for persons who are trapped or who have sustained bodily injury. Take

additional measures as necessary to secure the accident or incident site and to protect against any further injury or property damage.

20. The Contractor will perform an investigation into the root cause of the accident, incident, or near miss. Within 24 hours of an accident, incident, or near miss, the Contractor will prepare and submit to the RE a written investigation report detailing findings, corrective actions, and hazard mitigation implementation to prevent recurrence.
21. Notify the RE within two (2) hours of the start of an inspection by any outside regulatory agency personnel, including OSHA, NYC DOB, or others.
22. Maintain all records pertaining to all required safety compliance documents, accidents and incidents reports. DDC reserves the right to request copy of any records pertaining to the safety of the project and required by DDC and other federal, state, and city agencies, including but not limited to permits, training records, safety inspection records, drawings, equipment records, etc.
23. Cooperate with DDC Office of Construction Safety/ RE and address DDC recommendations on safety, which will in no way relieve the Contractor of its responsibilities for safety on the project. The Contractor has sole responsibility for safety.

V. SAFETY QUESTIONNAIRE

DDC requires that all Contractors provide information regarding their current and past safety performance and programs. This will be accomplished by the use of the DDC Safety Questionnaire. As a part of the bid submittal package, the contractor will submit a completed DDC Safety Questionnaire listing company workers' compensation experience modification rating and OSHA Incident Rates for the three (3) years prior to the date of the bid opening. DDC may request a Contractor to update its Questionnaire at any time or to provide more detailed information. The Contractor will provide the requested information within 15 days.

The following criteria will be used by DDC in reviewing the Contractor's responsibility, which will be based on the information provided on the questionnaire:

Criteria 1: OSHA Injury and Illness Rates (I&IR) are no greater than the average for the industry (based on the most current Bureau of Labor Statistics data for the Contractors SIC code); and

Criteria 2: Insurance workers compensation Experience Modification Rate (EMR) equal to or less than 1.0; and

Criteria 3: Any willful violations issued by OSHA or NYC DOB within the last three (3) years; and

Criteria 4: A fatality (worker or member of public) and injuries, requiring OSHA notification, experienced on or near Contractor's worksite within the last three (3) years; and

Criteria 5: Past safety performance on DDC projects (accidents; status of site safety plan submittals; etc.)

Criteria 6: OSHA violation history for the last three (3) years;

Criteria 7: Contractor will provide OSHA Injury and Illness Records (currently OSHA 300 and 300A Logs) for the last three (3) years.

If the Contractor fails to meet the basic criteria listed above, the Office of Construction Safety may request, through the ACCO, more details concerning the Contractor's safety experience. DDC may request the Contractor to provide copies of, among other things, accident investigation reports, OSHA records, OSHA and NYC DOB citations, EPA citations and written corrective action plan.

VI. SITE SAFETY PLAN

Within thirty (30) days from the Award Date or as otherwise directed, the Contractor will submit the Site Safety Plan. The Site Safety Plan will identify project work scope, safety hazards associated with the project tasks, and include specific safety procedures and training appropriate and necessary to complete the work. The Site Safety Plan is subject to review and acceptance by the Office of Construction Safety prior to the commencement of work at the site. Due to the project work scope and project duration, the Office of Construction Safety may grant a conditional acceptance for a Site Safety Plan without all sections being complete. In a case of a "Conditional Acceptance" of a Site Safety Plan,

the Contractor will provide the remaining sections previously incomplete and/or not submitted for review and acceptance by the Office of Construction Safety prior to the commencement of the construction activities. The Office of Construction Safety reserves the right to withdraw the initial "Conditional Acceptance" if the Contractor fails to provide the remaining sections of a Site Safety Plan. Failure by the Contractor to submit an acceptable Site Safety Plan will be grounds for default.

Site Safety Plan requirements: The Site Safety Plan will be a written document and will apply to all project specific Contractor and subcontractor operations, and will have at a minimum, the following elements with each described in a separate section (It may be necessary to modify the basic format for certain unique or high-risk projects, such as tunnels or high-rise construction). All Site Safety Plan sections will be numbered in the order listed below. For sections, which are not applicable for the type of the work being performed by the Contractor on DDC project, the Contractor will in writing indicate "Not applicable based on the project work scope." The Site Safety Plan will include Contractor's name, DDC project ID, project location (s), and development and revision dates. The Site Safety Plan will include the sections, attachments, and appendixes provided in the Site Safety Plan. All pages of the Site Safety Plan will be numbered. If requested by the Office of Construction Safety, the Site Safety Plan must be developed and submitted for approval using a web-based system, the Site Safety Plan Application (SSP App).

1. Project Work Scope – Detailed information regarding work tasks that will be performed by Contractor and subcontractors under the project.
2. Responsibility and Organization – Contractor's organization chart with responsible personnel for the project, including titles, names, contact information, roles, and responsibilities. All Contractor's personnel required by the DDC Safety Requirements will be identified.
3. Safety Training and Education – OSHA 10 Hours training, requirements for daily safety briefings and weekly safety meetings, any work task specific training, responsible staff for implementation of training program for the project.
4. Job Hazard Analysis (JHA) – Project specific Job Hazard Analysis including work tasks, identified hazards, hazard control methods (administrative, engineering, PPE) to protect workers, property and general public, Contractor's name, project id, location, name and signature of a certifying person, hazard assessment date.
5. Protection of Public – Project specific procedures covering safety of the general public during all project construction activities.
6. Hazard Corrective Actions - Procedures for hazard identification, including responsible person(s), frequency of safety inspections, implementation of corrective actions, safety inspection checklist.
7. Accident/Exposure Investigation – Project specific procedures for accident/incident/near miss investigation and implementation of corrective actions. Accident/incident/near miss notification procedure of DDC project staff (timer frame and responsible personnel).
8. Recording and Reporting Injuries – Procedures to meet 29 CFR 1904 requirements.
9. First Aid and Medical Attention – Responsible staff, location and inspection of First Aid kit, directions to local hospitals; emergency telephone numbers.
10. Project Specific Fire Protection and Prevention Program – Project specific procedures, including responsible staff, fire alarm system/methods, hot work procedures, etc.
11. Housekeeping Procedure.
12. Project Specific Illumination Procedure.
13. Project Specific Sanitation Procedure.
14. Personal Protective Equipment (PPE), including Respiratory Protection Program and Hearing Conservation Program, if required.
15. Hazard Communication Program – Contractor's Hazard Communication Program, responsible staff; training; SDS records, project specific list of chemicals; location of the program and SDS records.
16. Means of Egress – Information regarding free and unobstructed egress from all parts of the building or structure; exit marking; maintenance of means of egress, etc.
17. Employee Emergency Action Plan – Project specific: responsible staff, emergency alarm system/devices, evacuation procedure, procedure to account for employees after evacuation, etc.
18. Evacuation Plan – Project specific evacuation plan (drawing/scheme) with exists and evacuation routes.
19. Ionizing/Nonionizing Radiation – Competent person, license and qualification requirements, type of radiation, employee's exposure and protection, safety procedures, etc.

20. Material Handling, Storage, Use and Disposal – Project specific information regarding material storage, disposal, and handling: procedures, plan/drawings, etc.
21. Signs, Signals, and Barricades – Use of danger/warning signs, safety instruction signs, sidewalk closure and pedestrian fencing and barricades (if not included in the MPT plan), etc.
22. Tools – Hand and Power – Safety procedures for the type of tools to be used.
23. Scaffold – Project specific scaffold types, procedures, training requirements, scaffold drawings, designed, sealed, and signed by NYS Licensed Professional Engineer, or as otherwise directed; competent person, criteria for project specific scaffold, falling object protection, procedures for aerial lifts/scissor lifts.
24. Welding and Cutting – Project specific procedure for welding and cutting, including all necessary safety requirements such as fire prevention, personal protective equipment, hot work permits (if not covered by Contractor's Fire Prevention and Protection program, FDNY certificate requirements).
25. Electrical Safety – Project specific procedures, including lock out-tag out.
26. Fall Protection – Project specific information regarding selected fall protection systems, fall protection plan, responsible staff.
27. Cranes, Derrick, Hoists, Elevators, Conveyors – project specific equipment information including type, rated load capacity, manufacture specification requirements, competent person, exposure to falling load, inspection, recordkeeping, clearance requirements, communication procedure, ground lines, permits.
28. Excavation Safety – Competent person; excavation procedures; project specific protective system, including drawings, designed, sealed, and signed by NYS Licensed Professional Engineer, or as otherwise directed.
29. Protection of Underground Facilities and Utilities Procedure, including responsible staff and responsibilities.
30. Concrete and Masonry Construction Procedures
31. Maintenance and Protection of Traffic Plan – Project specific MPT plan, designed, sealed, and signed by NYS Licensed Professional Engineer, or as otherwise directed; flagmen training, public safety, etc.
32. Steel Erection – Site specific erection plan, requirements for applicable written notifications, competent person, fall protection plan, training requirements, etc.
33. Demolition – Engineering survey, including written evidence, disconnection of all effected utilities, identification of all hazardous chemicals, materials, gases, etc., floor openings, chutes, inspection and maintenance of all stairs/passageways, removal of materials/debris/structural elements, lock out/tag out, competent person.
34. Blasting and the Use of Explosives – Project specific safety procedures, warning signs, training/qualification, transportation, storage and use of explosives, inspection.
35. Stairways and Ladders – Types of stairs and ladders, safety procedures, training requirements.
36. Alcohol and Drug Abuse Policy
37. Rodents and Vermin Controls
38. Toxic and Hazardous Substances – Safety procedures for substances that Contractor's and subcontractor's employees can be exposed on project.
39. Noise Mitigation Plan – Completed project specific Noise Mitigation Plan, and noise mitigation procedures.
40. Confined Space Program – Project specific Confined Space Program, responsible staff, training records, equipment information, rescue procedure, list of project specific confined spaces, forms.
41. Construction Vehicles/Heavy Equipment – Type of construction vehicles/heavy equipment to be used on site, procedures
42. Dust Mitigation Plan – Completed project specific Dust Mitigation Plan, and dust mitigation procedures.
43. Working Over and Near Water. Diving Operations – safety procedures including personal protective equipment, fall protection, rescue services, etc.

The most critical component of the Site Safety Plan is the Job Hazard Analysis (JHA) section. The JHA form is a written document prepared by the Contractor. The Contractor will conduct a site and task assessment to identify the tasks and any potential safety or environmental hazards related to performance of the work, eliminate or implement controls for the potential hazards, and identify proper personal protective equipment for the task. The JHA will be communicated to all Contractor/subcontractor personnel on site. The JHA will include safety hazard identification and controls to protect employees, general public, and property.

The initial JHA will be included in the Contractor's Site Safety Plan and the current JHA form will be available at the construction site for reference. A JHA is a living document that will be re-evaluated and revised to address new hazards and tasks that may develop and will be present at the worksite and produced upon request.

VII. KICK-OFF MEETINGS/PRE-CONSTRUCTION AND SAFETY REVIEW

Prior to the start of construction activities on all DDC projects, RE will invite the Office of Construction Safety to the construction kick-off meeting. The Office of Construction Safety representative(s) will participate in this meeting with the Contractor and RE for the purpose of:

A. Reviewing DDC Contract Safety Requirements
B. Reviewing site-specific safety issues based on a project work scope, location, and any other factors which may impact safety of workers and general public.
C. Reviewing the Site Safety Plan and JHA requirements.
D. Reviewing Accident/Incident reporting and investigation procedures.
E. Reviewing designated safety contacts, roles, and responsibilities.
F. Discussing planned inspections and audits of the site by the Office of Construction Safety personnel.

VIII. EVALUATION DURING WORK IN PROGRESS

The Contractor's adherence to these Safety Requirements will be monitored throughout the project. This will be accomplished by the following:

A. Use of a safety checklist by a representative of the Office of Construction Safety (or other designated DDC representative) and the RE during regular inspections and comprehensive audits of the job site. Field Exit Conferences will be held with the RE and Contractor Project Safety Representatives.
B. The RE will continually monitor the safety and environmental performance of the Contractor's employees and work methods. Deficiencies will be brought to the attention of the Contractor's Project Safety Representative on site for immediate correction. The RE will maintain a written record of these deficiencies and have these records available upon request. Any critical deficiencies will be immediately reported to the Office of Construction Safety via telephone (718)391-1911.
C. If the Contractor's safety performance during the project is not up to DDC standards (safety performance measure, accident/incident rate, etc.) the Director – Office of Construction Safety, or his/her designee will meet with the Contractor's Project Safety Representative and other representatives, the RE, and the DDC Environmental Specialist (if environmental issues are involved). The purpose of this meeting is to 1) determine the level of non-compliance; 2) explain and clarify the safety/environmental provisions; 3) agree on a future course of action to correct the deficiencies.
D. If the deficiencies continue, the Commissioner may, without limitation, declare the Contractor in default.
E. The Contractor will within 1 hour inform the RE of all accidents/incidents/near misses including all fatalities, any injuries to employees or members of the general public, and property damage (e.g., structural damage, equipment rollovers, utility damage, loads dropped from crane). The RE will notify the Office of Construction Safety as per DDC's Construction Safety Emergency and Accident Notification and Response Procedure and will maintain a record of all Contractor accidents/incidents for the project.
F. The Contractor and the RE will notify the Office of Construction Safety within two (2) hours of the start of any NYS-DOL/ NYC-COSH/ OSHA/ EPA inspections.

IX. SAFETY PERFORMANCE EVALUATION

The Contractor's safety record, including accident/incident history and DDC safety inspection results, will be considered as part of the Contractor's performance evaluation at the conclusion of the project. Poor safety performance during the course of the project will be a reason to rate a Contractor unsatisfactory which may be reflected in the City's PASSPort system and will be considered for future procurement actions as set forth in the City's Procurement Policy Board Rules.

NOTICE TO BIDDERS

Please be advised that the following Riders to the March 2017 New York City Standard Construction Contract have been attached and incorporated in this Invitation for Bid:

- Rider regarding Non-Compensable Delays and Grounds for Extension;
- Rider regarding NYC Earned Safe and Sick Time Act;
- Rider regarding City Fleet and Truck Safety Requirements for City Contractors.

Other than provisions specifically delineated in the Riders, all other terms of the March 2017 New York City Standard Construction Contract continue to apply in full force and effect.

RIDER TO NEW YORK CITY STANDARD CONSTRUCTION CONTRACT (MARCH 2017) REGARDING NON-COMPENSABLE DELAYS AND GROUNDS FOR EXTENSION

The following provisions supersede the corresponding provisions in the March 2017 version of the New York City Standard Construction Contract:

1. Section **11.5.1** provides as follows:

   11.5.1 The acts or omissions of public or government bodies (other than **City** agencies) or of any third parties who are disclosed in the **Contract Documents,** or those third parties who are ordinarily encountered or who are generally recognized as related to the **Work**, including but not limited to, **Other Contractors**, utilities or private enterprises;

2. Section **11.5.6** provides as follows:

   11.5.6 Climatic conditions, storms, floods, droughts, tidal waves, fires, hurricanes, earthquakes, landslides or other catastrophes or acts of God; acts of war or of the public enemy or terrorist acts; disruption, outage or power failure caused by a utility's inability or failure to provide service, pandemics, epidemics, outbreaks of infectious disease or any other public health emergency; other states of emergency declared by the City, State or Federal government , quarantine restrictions, and freight embargoes; including the **City's** reasonable responses to any of the above; and

3. Section **13.3** provides as follows:

   13.3 Grounds for Extension: If such application is made, the **Contractor** shall be entitled to an extension of time for delay in completion of the **Work** caused solely:

   13.3.1 By any of the acts or omissions of the **City**, its officials, agents or employees set forth in Articles **11.4.1.1** through **11.4.1.9**; or

   13.3.2 By or attributable to any of the items set forth in Articles **11.5.1** through **11.5.7**.

   13.3.3 The **Contractor** shall, however, be entitled to an extension of time for such causes only for the number of **Days** of delay which the **ACCO** or the Board may determine to be due solely to such causes, and then only if the **Contractor** shall have strictly complied with all of the requirements of Articles 9 and 10.

NYC EARNED SAFE AND SICK TIME ACT CONTRACT RIDER

(To supersede Section 4.06 of the January 2018 Appendix A and Section 35.5 of the March 2017 Standard Construction Contract and to be attached to other City contracts and solicitations)

A. *Introduction and General Provisions.*

1. The Earned Safe and Sick Time Act ("ESSTA"), codified at Title 20, Chapter 8 of the New York City Administrative Code, also known as the "Paid Safe and Sick Leave Law," requires covered employees (as defined in Admin. Code § 20-912) in New York City ("City") to be provided with paid safe and sick time. Contractors of the City or of other governmental entities may be required to provide safe and sick time pursuant to the ESSTA. The ESSTA is enforced by the City's Department of Consumer and Worker Protection ("DCWP"), which has promulgated 6 RCNY §§ 7-101 and 201 *et seq*. ("DCWP Rules").

2. The Contractor agrees to comply in all respects with the ESSTA and the DCWP Rules, and as amended, if applicable, in the performance of this agreement. The Contractor further acknowledges that such compliance is a material term of this agreement and that failure to comply with the ESSTA in performance of this agreement may result in its termination.

3. The Contractor must notify (with a copy to DCWP at ComplianceMonitoring@dcwp.nyc.gov) the Agency Chief Contracting Officer of the City Agency or other entity with whom it is contracting in writing within 10 days of receipt of a complaint (whether oral or written) or notice of investigation regarding the ESSTA involving the performance of this agreement. Additionally, the Contractor must cooperate with DCWP's guidance and must comply with DCWP's subpoenas, requests for information, and other document demands as set forth in the ESSTA and the DCWP Rules. More information is available at https://www1.nyc.gov/site/dca/about/paid-sick-leave-what-employers-need-to-know.page.

4. Upon conclusion of a DCWP investigation, Contractor will receive a findings letter detailing any employee relief and civil penalties owed. Pursuant to the findings, Contractor will have the opportunity to settle any violations and cure the breach of this agreement caused by failure to comply with the ESSTA either i) without a trial by entering into a consent order or ii) appearing before an impartial judge at the City's administrative tribunal. In addition to and notwithstanding any other rights and remedies available to the City, non-payment of relief and penalties owed pursuant to a consent order or final adjudication within 30 days of such consent order or final adjudication may result in the termination of this agreement without further opportunity to settle or cure the violations.

5. The ESSTA is briefly summarized below for the convenience of the Contractor. The Contractor is advised to review the ESSTA and the DCWP Rules in their entirety. The Contractor may go to www.nyc.gov/PaidSickLeave for resources for employers, such as Frequently Asked Questions, timekeeping tools and model forms, and an event calendar of upcoming presentations and webinars at which the Contractor can get more information about how to comply with the ESSTA and the DCWP Rules. The Contractor acknowledges that it is responsible for compliance with the ESSTA and the DCWP Rules notwithstanding any inconsistent language contained herein.

B. *Pursuant to the ESSTA and DCWP Rules: Applicability, Accrual, and Use.*

1. An employee who works within the City must be provided paid safe and sick time.[1] Employers with one hundred or more employees are required to provide 56 hours of safe and sick time for an employee each calendar year. Employers with fewer than one hundred employees are required to provide 40 hours of sick leave each calendar year. Employers must provide a minimum of one hour of safe and sick time for every 30 hours worked by an employee and compensation for such safe and sick time must be provided at the greater of the employee's regular hourly rate or the minimum wage at the time the paid safe or sick time is taken. Employers are not discouraged or prohibited from providing more generous safe and sick time policies than what the ESSTA requires.

2. Employees have the right to determine how much safe and sick time they will use, provided that an employer may set a reasonable minimum increment for the use of safe and sick time not to exceed four hours per day. For the use of safe time or sick time beyond the set minimum increment, an employer may set fixed periods of up to thirty minutes beyond the minimum increment. In addition, an employee may carry over up to 40 or 56 hours of unused safe and sick time to the following calendar year, provided that no employer is required to carry over unused paid safe and sick time if the employee is paid for such unused safe and sick time and the employer provides the employee with at least the legally required amount of paid safe and sick time for such employee for the immediately subsequent calendar year on the first day of such calendar year.

3. An employee entitled to safe and sick time pursuant to the ESSTA may use safe and sick time for any of the following:

a. such employee's mental illness, physical illness, injury, or health condition or the care of such illness, injury, or condition or such employee's need for medical diagnosis or preventive medical care;

b. such employee's care of a family member (an employee's child, spouse, domestic partner, parent, sibling, grandchild, or grandparent, the child or parent of an employee's spouse or domestic partner, any other individual related by blood to the employee, and any other individual whose close association with the employee is the equivalent of a family relationship) who has a mental illness, physical illness, injury or health condition or who has a need for medical diagnosis or preventive medical care;

---

[1] Pursuant to the ESSTA, if fewer than five employees work for the same employer, and the employer had a net income of less than one million dollars during the previous tax year, such employer has the option of providing such employees uncompensated safe and sick time.

c. closure of such employee's place of business by order of a public official due to a public health emergency;

d. such employee's need to care for a child whose school or childcare provider has been closed due to a public health emergency; or

e. when the employee or a family member has been the victim of a family offense matter, sexual offense, stalking, or human trafficking:

1. to obtain services from a domestic violence shelter, rape crisis center, or other shelter or services program for relief from a family offense matter, sexual offense, stalking, or human trafficking;
2. to participate in safety planning, temporarily or permanently relocate, or take other actions to increase the safety of the employee or employee's family members from future family offense matters, sexual offenses, stalking, or human trafficking;
3. to meet with a civil attorney or other social service provider to obtain information and advice on, and prepare for or participate in any criminal or civil proceeding, including but not limited to, matters related to a family offense matter, sexual offense, stalking, human trafficking, custody, visitation, matrimonial issues, orders of protection, immigration, housing, discrimination in employment, housing or consumer credit;
4. to file a complaint or domestic incident report with law enforcement;
5. to meet with a district attorney's office;
6. to enroll children in a new school; or
7. to take other actions necessary to maintain, improve, or restore the physical, psychological, or economic, health or safety of the employee or the employee's family member or to protect those who associate or work with the employee.

4. An employer must not require an employee, as a condition of taking safe and sick time, to search for a replacement. However, where the employee's need for safe and sick time is foreseeable, an employer may require an employee to provide reasonable notice of the need to use safe and sick time. For an absence of more than three consecutive work days, an employer may require reasonable documentation that the use of safe and sick time was needed for a reason listed in Admin. Code § 20-914; and/or written confirmation that an employee used safe and sick time pursuant to the ESSTA. However, an employer may not require documentation specifying the nature of a medical condition, require disclosure of the details of a medical condition, or require disclosure of the details of a family offense matter, sexual offense, stalking, or human trafficking, as a condition of providing safe and sick time. Health information and information concerning family offenses, sexual offenses, stalking or human trafficking obtained solely due to an

employee's use of safe and sick time pursuant to the ESSTA must be treated by the employer as confidential. An employer must reimburse an employee for all reasonable costs or expenses incurred in obtaining such documentation for the employer.

5. An employer must provide to all employees a written policy explaining its method of calculating sick time, policies regarding the use of safe and sick time (including any permissible discretionary conditions on use), and policies regarding carry-over of unused time at the end of the year, among other topics. It must provide the policy to employees using a delivery method that reasonably ensures that employees receive the policy. If such employer has not provided its written policy, it may not deny safe and sick time to an employee because of non-compliance with such a policy.

6. An employer must provide a pay statement or other form of written documentation that informs the employee of the amount of safe/sick time accrued and used during the relevant pay period and the total balance of the employee's accrued safe/sick time available for use.

7. Safe and sick time to which an employee is entitled must be paid no later than the payday for the next regular payroll period beginning after the safe and sick time was used.

C. *Exemptions and Exceptions*. Notwithstanding the above, the ESSTA does not apply to any of the following:

1. an independent contractor who does not meet the definition of employee under N.Y. Labor Law § 190(2);

2. an employee covered by a valid collective bargaining agreement, if the provisions of the ESSTA are expressly waived in such agreement and such agreement provides a benefit comparable to that provided by the ESSTA for such employee;

3. an audiologist, occupational therapist, physical therapist, or speech language pathologist who is licensed by the New York State Department of Education and who calls in for work assignments at will, determines their own schedule, has the ability to reject or accept any assignment referred to them, and is paid an average hourly wage that is at least four times the federal minimum wage;

4. an employee in a work study program under Section 2753 of Chapter 42 of the United States Code;

5. an employee whose work is compensated by a qualified scholarship program as that term is defined in the Internal Revenue Code, Section 117 of Chapter 20 of the United States Code; or

6. a participant in a Work Experience Program (WEP) under N.Y. Social Services Law § 336-c.

D. *Retaliation Prohibited.* An employer shall not take any adverse action against an employee that penalizes the employee for, or is reasonably likely to deter the employee from or interfere with the employee exercising or attempting in good faith to exercise any right provided by the ESSTA. In addition, an employer shall not interfere with any investigation, proceeding, or hearing pursuant to the ESSTA.

E. *Notice of Rights.*

1. An employer must provide its employees with written notice of their rights pursuant to the ESSTA. Such notice must be in English and the primary language spoken by an employee, provided that DCWP has made available a translation into such language. Downloadable notices are available on DCWP's website at https://www1.nyc.gov/site/dca/about/Paid-Safe-Sick-Leave-Notice-of-Employee-Rights.page. The notice must be provided to the employees by a method that reasonably ensures personal receipt by the employee.

2. Any person or entity that willfully violates these notice requirements is subject to a civil penalty in an amount not to exceed $50.00 for each employee who was not given appropriate notice.

F. *Records*. An employer must retain records documenting its compliance with the ESSTA for a period of at least three years, and must allow DCWP to access such records in furtherance of an investigation related to an alleged violation of the ESSTA.

G. *Enforcement and Penalties.*

1. Upon receiving a complaint alleging a violation of the ESSTA, DCWP must investigate such complaint. DCWP may also open an investigation to determine compliance with the ESSTA on its own initiative. Upon notification of a complaint or an investigation by DCWP, the employer must provide DCWP with a written response and any such other information as DCWP may request. If DCWP believes that a violation of the ESSTA has occurred, it has the right to issue a notice of violation to the employer .

2. DCWP has the power to grant an employee or former employee all appropriate relief as set forth in Admin. Code § 20-924(d). Such relief may include, but is not limited to, treble damages for the wages that should have been paid; statutory damages for unlawful retaliation; and damages, including statutory damages, full compensation for wages and benefits lost, and reinstatement, for unlawful discharge. In addition, DCWP may impose on an employer found to have violated the ESSTA civil penalties not to exceed $500.00 for a first violation, $750.00 for a second violation within two years of the first violation, and $1,000.00 for each succeeding violation within two years of the previous violation. When an employer has a policy or practice of not providing or refusing to allow the use of safe and sick time to its employees, DCWP may seek penalties and relief on a per employee basis.

3. Pursuant to Admin. Code § 20-924.2, (a) where reasonable cause exists to believe that an employer is engaged in a pattern or practice of violations of the ESSTA, the Corporation Counsel may commence a civil action on behalf of the City in a court of competent jurisdiction by filing a complaint setting forth facts relating to such pattern or practice and requesting relief, which may include injunctive relief, civil penalties and any other appropriate relief. Nothing in § 20-924.2 prohibits DCWP from exercising its authority under section 20-924 or the Charter, provided that a civil action pursuant to § 20-924.2 shall not have previously been commenced.

H. *More Generous Polices and Other Legal Requirements.* Nothing in the ESSTA is intended to discourage, prohibit, diminish, or impair the adoption or retention of a more generous safe and sick time policy, or the obligation of an employer to comply with any contract, collective bargaining agreement, employment benefit plan or other agreement providing more generous safe and sick time. The ESSTA provides minimum requirements pertaining to safe and sick time and does not preempt, limit, or otherwise affect the applicability of any other law, regulation, rule, requirement, policy or standard that provides for greater accrual or use by employees of safe and sick leave or time, whether paid or unpaid, or that extends other protections to employees. The ESSTA may not be construed as creating or imposing any requirement in conflict with any federal or state law, rule or regulation.

New York City Mayoral Executive Order No. 39 Rider

City Fleet and Truck Safety Requirements for City Contractors

Section 1.01 Background

This rider is included in the Agreement and made a part thereof pursuant to the provisions of Mayoral Executive Order 39 of 2024.

Section 1.02 Definitions

A. Capitalized terms not otherwise defined in this rider shall have the meaning ascribed to them in the Agreement.

B. Agreement: The agreement between the City and the Contractor, to which this rider has been added and made a part.

C. City-contracted Vehicle means a Truck (as hereinafter defined) or any other motor vehicle that the Contractor anticipates providing in accordance with this Agreement or using in performing its obligations under this Agreement on a weekly or more frequent basis, including those anticipated to be provided or used by subcontractors under subcontracts having an estimated value of $2,000,000 or more.

D. Contracting Agency: the City agency or office through which the City of New York has entered into this Agreement.

E. Contractor: the entity providing services under this Agreement.

F. Executive Order: Mayoral Executive Order 39 of 2024, as it may be amended.

G. High Vision Truck: A Truck with a cab-over or cab-forward design wherein the driver sits in front of the front axle and opposed to conventional cab design wherein the engine and front axle are in front of the driver. The distance from the forward of the center of the vehicle bumper at which the driver can see the top of a 3-foot cone shall not exceed eight feet and the distance beyond the exterior of the passenger side door at which the driver can first see the top of the 4-foot cone shall not exceed six feet.

H. Registration: Registration of this Agreement pursuant to Section 328 of the New York City Charter.

I. Telematics: Automatic vehicle location systems that track vehicle location and speed and alert the driver and another designated person(s) to such location and speed in real time.

J. Truck: A City-contracted Vehicle with a manufacturer's gross vehicle weight rating exceeding 10,000 pounds. The term does not include off-road construction vehicles.

K. Truck Surround Cameras: A system of cameras, sensors, and alerts placed on a Truck that provides a Truck operator with a full view of all four sides of the Truck.

L. Vehicle Safety Plan: A plan with regard to City-contracted Vehicles, approved by the Contracting Agency, that includes the components listed in Section 2.03(A) through (F) of this rider.

Section 2.01 Vehicle Requirements

All City-contracted Vehicles shall conform to the following requirements:

A. Truck Surround Cameras: All Trucks, other than High Vision Trucks, shall be outfitted with truck surround cameras in accordance with the following schedule:
   a. Contracts involving 10 or fewer Trucks: No later than 12 months from Registration.
   b. Contracts involving more than 10 Trucks: No later than 18 months from Registration.
   c. New or replacement Truck acquired after work under this Agreement has begun: Truck must be outfitted with Truck Surround Cameras within 12 months from the date of first using of the Truck.
   d. Contractor must submit to the Contracting Agency photographic and purchase order evidence, that is satisfactory to the Contracting Agency, of compliance with this Paragraph (A).

B. Truck Side-guards: Contractor shall provide side-guards for City-contracted Vehicles as applicable pursuant to Section 6-141 of the New York City Administrative Code.

C. Telematics: All City-contracted Vehicles must be installed with Telematics. Data gathered by Telematics must be made available in a manner that is satisfactory to the Contracting Agency.

Section 2.02 Safety Requirements

Contractor shall provide the following:

A. Licensing: Contractors shall ensure proper licensing for all drivers who operate City-contracted Vehicles. Contractors shall ensure that all drivers operating City-contracted Vehicles are enrolled in the New York State License Notification System (LENS) and that all out-of-state licenses are being monitored by Contractor. Contractor must notify the Contracting Agency of any license suspensions and/or arrests tied to unsafe or illegal vehicle operation by any drivers of City-contracted Vehicles.

B. Training: Contractor must provide the Contracting Agency documentation, satisfactory to the Contracting Agency, showing:
    a. That all drivers of City-contracted Vehicles have taken a New York State approved defensive driving class within six months after Registration; or
    b. That all drivers of City-contracted Vehicles have attended a New York State-approved defensive driving class within 3 years prior to Registration; or
    c. That all drivers of City-contracted Vehicles have received alternative safe driver training acceptable to the Contracting Agency that is documented to the satisfaction of the Contracting agency.

C. Crash tracking: Contractors must notify the Contracting Agency of any and all collisions that take place involving City-contracted Vehicles while performing services under this Agreement.

Section 2.03 Vehicle Safety Plan

Within one month after Registration, the Contractor must submit, for review and approval, to Contracting Agency, at the address set forth in the Agreement for notices to the City, and DCAS Fleet (C/O Chief Fleet Management Officer, 23rd Floor South, Municipal Building, 1 Centre Street, NY, NY 10007) a proposed vehicle safety plan that shall include at the minimum the components listed in Paragraphs (A) through (E) below. If directed by the Contracting Agency, Contractor shall revise said proposed vehicle safety plan in accordance with the directions of the Contracting Agency, and until the Contracting Agency issues its approval thereof, Contractor shall submit a revised proposed vehicle safety plan to the Contracting Agency in each case, within 15 days after receipt by Contractor of directions to that effect from the Contracting Agency. Upon approval of the proposed vehicle safety plan, said proposed plan shall be considered the Vehicle Safety Plan and Contractor shall comply with the terms thereof. Each second anniversary of the approval of the Vehicle Safety Plan the Contractor shall submit an update thereof. The Vehicle Safety Plan shall include at the minimum the following components:

A. Vehicle List: List of City-contracted Vehicles, including the year, make, model, VIN and license plate number of each City-contracted Vehicle;

B. Safety Training: Documentation showing that all drivers of City-contracted Vehicles have completed the training detailed in section 2.02(B) of this Rider;

C. Technology: A list of all relevant technology investments installed on City-contracted vehicles, including but not limited to the technology listed in section 2.01 of this Rider;

D. Crash Tracking: An explanation of Contractor's process of monitoring and reviewing collisions including plans to notify Contracting Agency of collisions that take place while performing services under this Agreement; and

E. Corrective Action: A corrective action program for drivers of City-contracted Vehicles that engage in unsafe or dangerous driving behaviors and license monitoring.

F. Additional Safety Measures: Contractor must indicate if there are any additional safety technologies, safety practices, training, or other procedures that are utilized for City-contracted vehicles during the term of this Agreement.

Section 3.01 Liquidated Damages

A. Contractor acknowledges that its failure to comply with the provisions of this Vehicle Safety Plan will cause loss and damage to the City, the precise extent of which is difficult to ascertain in monetary terms. For this reason, the parties desire to provide fair and reasonable compensation to the City for such losses, which compensation shall not be construed as a penalty. It is therefore agreed that, in addition to any other liquidated damages that the Contractor shall be required to pay to the City in accordance with the provisions of the Agreement, Contractor shall pay to the City the following:
    a. The sum of $500.00 for each instance of a failure by the Contractor to submit a Vehicle Safety Plan in accordance with the provisions of Section 2.03.
    b. The sum of $500.00 for each instance of a failure by the Contractor to comply with the provisions of Section 2.02(A) [Licensing].
    c. The sum of $500.00 for each instance of a failure by the Contractor to comply with the provisions of Section 2.02(B) [Training].
    d. The sum of $500.00 for each instance of a failure by the Contractor to comply with the provisions of Section 2.02(C) [Crash Tracking].
    e. The sum of $500.00 for each instance of a failure by the Contractor to comply with the provisions of Section 2.01(C) [Telematics].

f. The sum of $3,000 for each instance of a failure by the Contractor to comply with the provisions of Section 2.01(A).
g. The Contracting Agency will provide at least 5 working days of notice to the Contractor and opportunity to rectify before implementing these liquidated damages.

B. Liquidated damages received pursuant to this Agreement are not intended to be nor shall they be treated as either a partial or full waiver or discharge of the City's right to indemnification, or the Contractor's obligation to indemnify the City, or to any other remedy provided for in this Agreement or by Law. The City may deduct and retain out of the monies which may become due under this Agreement, the amount of any such liquidated damages; and in case the amount which may become due hereunder shall be less than the amount of liquidated damages suffered by the City, the Contractor shall be liable to pay the difference.

CITY OF NEW YORK

STANDARD CONSTRUCTION CONTRACT

March 2017

(NO TEXT ON THIS PAGE)

CITY OF NEW YORK STANDARD CONSTRUCTION CONTRACT

TABLE OF CONTENTS

(NO TEXT ON THIS PAGE) 6
CHAPTER I: THE CONTRACT AND DEFINITIONS 7
ARTICLE 1. THE CONTRACT 7
ARTICLE 2. DEFINITIONS 7
CHAPTER II: THE WORK AND ITS PERFORMANCE 10
ARTICLE 3. CHARACTER OF THE WORK 10
ARTICLE 4. MEANS AND METHODS OF CONSTRUCTION 10
ARTICLE 5. COMPLIANCE WITH LAWS 11
ARTICLE 6. INSPECTION 16
ARTICLE 7. PROTECTION OF WORK AND OF PERSONS AND PROPERTY; NOTICESAND INDEMNIFICATION 17
CHAPTER III: TIME PROVISIONS 18
ARTICLE 8. COMMENCEMENT AND PROSECUTION OF THE WORK 18
ARTICLE 9. PROGRESS SCHEDULES 18
ARTICLE 10. REQUESTS FOR INFORMATION OR APPROVAL 19
ARTICLE 11. NOTICE OF CONDITIONS CAUSING DELAY AND DOCUMENTATION OF DAMAGES CAUSED BY DELAY 19
ARTICLE 12. COORDINATION WITH OTHER CONTRACTORS 23
ARTICLE 13. EXTENSION OF TIME FOR PERFORMANCE 24
ARTICLE 14. COMPLETION AND FINAL ACCEPTANCE OF THE WORK 27
ARTICLE 15. LIQUIDATED DAMAGES 28
ARTICLE 16. OCCUPATION OR USE PRIOR TO COMPLETION 29
CHAPTER IV: SUBCONTRACTS AND ASSIGNMENTS 29
ARTICLE 17. SUBCONTRACTS 29
ARTICLE 18. ASSIGNMENTS 31
CHAPTER V: CONTRACTOR'S SECURITY AND GUARANTEE 32
ARTICLE 19. SECURITY DEPOSIT 32
ARTICLE 20. PAYMENT GUARANTEE 32
ARTICLE 21. RETAINED PERCENTAGE 35
ARTICLE 22. INSURANCE 35
ARTICLE 23. MONEY RETAINED AGAINST CLAIMS 41
ARTICLE 24. MAINTENANCE AND GUARANTY 42
CHAPTER VI: CHANGES, EXTRA WORK, AND DOCUMENTATION OF CLAIM 43
ARTICLE 25. CHANGES 43
ARTICLE 26. METHODS OF PAYMENT FOR OVERRUNS AND EXTRA WORK 43
ARTICLE 27. RESOLUTION OF DISPUTES 46
ARTICLE 28. RECORD KEEPING FOR EXTRA OR DISPUTED WORK OR WORK ON ATIME & MATERIALS BASIS 50
ARTICLE 29. OMITTED WORK 51
ARTICLE 30. NOTICE AND DOCUMENTATION OF COSTS AND DAMAGES;PRODUCTION OF FINANCIAL RECORDS 51
CHAPTER VII: POWERS OF THE RESIDENT ENGINEER, THE ENGINEER ORARCHITECT

AND THE COMMISSIONER 52
ARTICLE 31. THE RESIDENT ENGINEER 52
ARTICLE 32. THE ENGINEER OR ARCHITECT OR PROJECT MANAGER 53
ARTICLE 33. THE COMMISSIONER 53
ARTICLE 34. NO ESTOPPEL 54
CHAPTER VIII: LABOR PROVISIONS 54
ARTICLE 35. EMPLOYEES 54
ARTICLE 36. NO DISCRIMINATION 61
ARTICLE 37. LABOR LAW REQUIREMENTS 63
ARTICLE 38. PAYROLL REPORTS 68
ARTICLE 39. DUST HAZARDS 69
CHAPTER IX: PARTIAL AND FINAL PAYMENTS 69
ARTICLE 40. CONTRACT PRICE 69
ARTICLE 41. BID BREAKDOWN ON LUMP SUM 69
ARTICLE 42. PARTIAL PAYMENTS 70
ARTICLE 43. PROMPT PAYMENT 70
ARTICLE 44. SUBSTANTIAL COMPLETION PAYMENT 71
ARTICLE 45. FINAL PAYMENT 72
ARTICLE 46. ACCEPTANCE OF FINAL PAYMENT 73
ARTICLE 47. APPROVAL BY PUBLIC DESIGN COMMISSION 73
CHAPTER X: CONTRACTOR'S DEFAULT 74
ARTICLE 48. COMMISSIONER'S RIGHT TO DECLARE CONTRACTOR IN DEFAULT 74
ARTICLE 49. EXERCISE OF THE RIGHT TO DECLARE DEFAULT 75
ARTICLE 50. QUITTING THE SITE 75
ARTICLE 51. COMPLETION OF THE WORK 75
ARTICLE 52. PARTIAL DEFAULT 76
ARTICLE 53. PERFORMANCE OF UNCOMPLETED WORK 76
ARTICLE 54. OTHER REMEDIES 76
CHAPTER XI: MISCELLANEOUS PROVISIONS 77
ARTICLE 55. CONTRACTOR'S WARRANTIES 77
ARTICLE 56. CLAIMS AND ACTIONS THEREON 77
ARTICLE 57. INFRINGEMENT 78
ARTICLE 58. NO CLAIM AGAINST OFFICIALS, AGENTS OR EMPLOYEES 78
ARTICLE 59. SERVICE OF NOTICES 78
ARTICLE 60. UNLAWFUL PROVISIONS DEEMED STRICKEN FROM CONTRACT 78
ARTICLE 61. ALL LEGAL PROVISIONS DEEMED INCLUDED 79
ARTICLE 62. TAX EXEMPTION 79
ARTICLE 63. INVESTIGATION(S) CLAUSE 80
ARTICLE 64. TERMINATION BY THE CITY 82
ARTICLE 65. CHOICE OF LAW, CONSENT TO JURISDICTION AND VENUE 85
ARTICLE 66. PARTICIPATION IN AN INTERNATIONAL BOYCOTT 85
ARTICLE 67. LOCALLY BASED ENTERPRISE PROGRAM 86
ARTICLE 68. ANTITRUST 87
ARTICLE 69. MacBRIDE PRINCIPLES PROVISIONS 87
ARTICLE 70. ELECTRONIC FILING/NYC DEVELOPMENT HUB 89
ARTICLE 71. PROHIBITION OF TROPICAL HARDWOODS 89
ARTICLE 72. CONFLICTS OF INTEREST 89

ARTICLE 73. MERGER CLAUSE **89**
ARTICLE 74. STATEMENT OF WORK **89**
ARTICLE 75. COMPENSATION TO BE PAID TO CONTRACTOR **90**
ARTICLE 76. ELECTRONIC FUNDS TRANSFER **90**
ARTICLE 77. RECORDS RETENTION **90**
ARTICLE 78. EXAMINATION AND VIEWING OF SITE, CONSIDERATION OF OTHER SOURCES OF INFORMATION AND CHANGED SITE CONDITIONS **90**
ARTICLE 79. PARTICIPATION BY MINORITY-OWNED AND WOMEN-OWNED BUSINESS ENTERPRISES IN CITY PROCUREMENT **91**
PERFORMANCE BOND #1 ..... **99**
PERFORMANCE BOND #2 ..... **103**
PAYMENT BOND **107**

(NO TEXT ON THIS PAGE)

WITNESSETH:

The parties, in consideration of the mutual agreements contained herein, agree as follows:

CHAPTER I: THE CONTRACT AND DEFINITIONS

ARTICLE 1. THE CONTRACT

1.1 Except for titles, subtitles, headings, running headlines, tables of contents and indices (all of which are printed herein merely for convenience), the following, except for such portions thereof as maybe specifically excluded, shall be deemed to be part of this **Contract**:

1.1.1 All provisions required by law to be inserted in this **Contract**, whether actuallyinserted or not;

1.1.2 The Contract Drawings and Specifications;

1.1.3 The General Conditions and Special Conditions, if any;

1.1.4 The **Contract**;

1.1.5 The Information for Bidders; Request for Proposals; Notice of Solicitation andProposal For Bids; Bid or Proposal, and, if used, the Bid Booklet;

1.1.6 All Addenda issued prior to the receipt of the bids; the Notice of Award; Performance and Payment Bonds, if required; and the Notice to Proceed or the Order to Work.

1.2 Should any conflict occur in or between the Drawings and Specifications, the **Contractor** shall be deemed to have estimated the most expensive way of doing the **Work**, unless the **Contractor** shall have asked for and obtained a decision in writing from the **Commissioner** of the **Agency** that is entering into this **Contract**, before the submission of its bid, as to what shall govern.

ARTICLE 2. DEFINITIONS

2.1 The following words and expressions, or pronouns used in their stead, shall, wherever they appear in this Contract, be construed as follows, unless a different meaning is clear from the context:

2.1.1 **"Addendum"** or **"Addenda"** shall mean the additional Contract provisions and/or technical clarifications issued in writing by the Commissioner prior to the receipt of bids.

2.1.2 **"Agency"** shall mean a city, county, borough or other office, position, department, division, bureau, board or commission, or a corporation, institution or agency of government, the expenses of which are paid in whole or in part from the City treasury.

2.1.3 **"Agency Chief Contracting Officer" (ACCO)** shall mean a person delegated authority by the Commissioner to organize and supervise the procurement activity of subordinate Agency staff in conjunction with the CCPO, or his/her duly authorized representative.

2.1.4 **"Allowance"** shall mean a sum of money which the Agency may include in the total amount of the Contract for such specific contingencies as the Agency believes may be necessary to complete the Work, *e.g.*, lead or asbestos remediation, and for which the Contractor will be paid on the basis of stipulated unit prices or a formula set forth in the Contract or negotiated between the parties provided, however, that if the Contractor is not directed to use the Allowance, the Contractor shall have no right to such money and it shall be deducted from the total amount of the Contract.

2.1.5 **"City"** shall mean the City of New York.

2.1.6 **"City Chief Procurement Officer" (CCPO)** shall mean a person delegated authority by the Mayor to coordinate and oversee the procurement activity of Mayoral agency staff, including the ACCO and any offices which have oversight responsibility for the procurement of construction, or his/her duly authorized representative.

2.1.7 **"Commissioner"** shall mean the head of the Agency that has entered into this Contract, or his/her duly authorized representative.

2.1.8 **"Comptroller"** shall mean the Comptroller of the City of New York.

2.1.9 **"Contract"** or **"Contract Documents"** shall mean each of the various parts of the contract referred to in Article 1 hereof, both as a whole and severally.

2.1.10 **"Contract Drawings"** shall mean only those drawings specifically entitled as such and listed in the Specifications or in any Addendum, or any drawings furnished by the Commissioner, pertaining or supplemental thereto.

2.1.11 **"Contract Work"** shall mean everything required to be furnished and done by the Contractor by any one or more of the parts of the Contract referred to in Article 1, except Extra Work as hereinafter defined.

2.1.12 **"Contractor"** shall mean the entity which executed this Contract, whether a corporation, firm, partnership, joint venture, individual, or any combination thereof, and its, their, his/her successors, personal representatives, executors, administrators, and assigns, and any person, firm, partnership, joint venture, individual, or corporation which shall at any time be substituted in the place of the Contractor under this Contract.

2.1.13 **"Days"** shall mean calendar days, except where otherwise specified.

2.1.14 **"Engineer"** or **"Architect"** or **"Project Manager"** shall mean the person so designated in writing by the Commissioner in the Notice to Proceed or the Order to Work to act as such in relation to this Contract, including a private Architect or Engineer or Project Manager, as the case may be. Subject to written approval by the Commissioner, the Engineer, Architect or Project Manager may designate an authorized representative.

2.1.15 **"Engineering Audit Officer" (EAO)** shall mean the person so designated by the Commissioner to perform responsible auditing functions hereunder.

2.1.16 **"Extra Work"** shall mean Work other than that required by the Contract at the time of award which is authorized by the Commissioner pursuant to Chapter VI of this Contract.

2.1.17 **"Federal-Aid Contract"** shall mean a contract in which the United States (federal) Government provides financial funding as so designated in the Information for Bidders.

2.1.18 **"Final Acceptance"** shall mean final written acceptance of all the Work by the Commissioner, a copy of which shall be sent to the Contractor.

2.1.19 **"Final Approved Punch List"** shall mean a list, approved pursuant to Article 14.2.2, specifying those items of Work to be completed by the Contractor after Substantial Completion and dates for the completion of each item of Work.

2.1.20 **"Law"** or **"Laws"** shall mean the Constitution of the State of New York, the New York City Charter, the New York City Administrative Code, a statute of the United States or of the State of New York, a local law of the City of New York, any ordinance, rule or regulation having the force of law, or common law.

2.1.21 **"Materialman"** shall mean any corporation, firm, partnership, joint venture, or individual, other than employees of the Contractor, who or which contracts with the Contractor or any Subcontractor, to fabricate or deliver, or who actually fabricates or delivers, plant, materials or equipment to be incorporated in the Work.

2.1.22 **"Means and Methods of Construction"** shall mean the labor, materials, temporary structures, tools, plant, and construction equipment, and the manner and time of their use, necessary to accomplish the result intended by this Contract.

2.1.23**"Notice to Proceed" or "Order to Work"** shall mean the written notice issued bythe Commissioner specifying the time for commencement of the Work and the Engineer, Architect or Project Manager.

2.1.24 **"Other Contractor(s)"** shall mean any contractor (other than the entity which executed this Contract or its Subcontractors) who or which has a contract with the City for work on or adjacent to the building or Site of the Work.

2.1.25 **"Payroll Taxes"** shall mean State Unemployment Insurance (SUI), Federal Unemployment Insurance (FUI), and payments pursuant to the Federal Insurance Contributions Act (FICA).

2.1.26 **"Project"** shall mean the public improvement to which this Contract relates.

2.1.27 **"Procurement Policy Board" (PPB)** shall mean the Agency of the City of New York whose function is to establish comprehensive and consistent procurement policies and rules which shall have broad application throughout the City.

2.1.28 **"Required Quantity"** in a unit price Contract shall mean the actual quantity of any item of Work or materials which is required to be performed or furnished in order to comply with the Contract.

2.1.29 **"Resident Engineer"** shall mean the representative of the Commissioner duly designated by the Commissioner to be his/her representative at the site of the Work.

2.1.30 **"Site"** shall mean the area upon or in which the Contractor's operations are carried on, and such other areas adjacent thereto as may be designated as such by the Engineer.

2.1.31 **"Small Tools"** shall mean items that are ordinarily required for a worker's job

function, including but not limited to, equipment that ordinarily has no licensing, insurance or substantive storage costs associated with it; such as circular and chain saws, impactdrills, threaders, benders, wrenches, socket tools, etc.

2.1.32 **"Specifications"** shall mean all of the directions, requirements, and standards of performance applying to the Work as hereinafter detailed and designated under the Specifications.

2.1.33 **"Subcontractor"** shall mean any person, firm or corporation, other than employees of the Contractor, who or which contracts with the Contractor or with its subcontractors to furnish, or actually furnishes labor, or labor and materials, or labor and equipment, or superintendence, supervision and/or management at the Site. Wherever the word Subcontractor appears, it shall also mean sub-Subcontractor.

2.1.34 **"Substantial Completion"** shall mean the written determination by the Engineer that the Work required under this Contract is substantially, but not entirely, complete and the approval of the **Final Approved Punch List**.

2.1.35 **"Work"** shall mean all services required to complete the Project in accordance with the Contract Documents, including without limitation, labor, material, superintendence, management, administration, equipment, and incidentals, and obtaining any and all permits, certifications and licenses as may be necessary and required to complete the Work, and shall include both Contract Work and Extra Work.

CHAPTER II: THE WORK AND ITS PERFORMANCE

ARTICLE 3. CHARACTER OF THE WORK

3.1 Unless otherwise expressly provided in the **Contract Drawings**, **Specifications,** and **Addenda**, the **Work** shall be performed in accordance with the best modern practice, utilizing, unless otherwise specified in writing, new and unused materials of standard first grade quality and workmanship anddesign of the highest quality, to the satisfaction of the **Commissioner**.

ARTICLE 4. MEANS AND METHODS OF CONSTRUCTION

4.1 Unless otherwise expressly provided in the **Contract Drawings**, **Specifications,** and **Addenda**, the **Means and Methods of Construction** shall be such as the **Contractor** may choose; subject, however, to the **Engineer's** right to reject the **Means and Methods of Construction** proposed by the **Contractor** which in the opinion of the **Engineer**:

4.1.1 Will constitute or create a hazard to the **Work**, or to persons or property; or

4.1.2 Will not produce finished **Work** in accordance with the terms of the **Contract**; or

4.1.3 Will be detrimental to the overall progress of the **Project**.

4.2 The **Engineer's** approval of the **Contractor's Means and Methods of Construction**, orhis/her failure to exercise his/her right to reject such means or methods, shall not relieve the **Contractor** of its obligation to complete the **Work** as provided in this **Contract**; nor shall the exercise of such rightto reject

create a cause of action for damages.

ARTICLE 5. COMPLIANCE WITH LAWS

5.1 The **Contractor** shall comply with all **Laws** applicable to this **Contract** and to the **Work** to be done hereunder.

5.2 Procurement Policy Board Rules: This **Contract** is subject to the Rules of the **PPB** ("**PPB** Rules") in effect at the time of the bid opening for this **Contract**. In the event of a conflict between the **PPB** Rules and a provision of this **Contract**, the **PPB** Rules shall take precedence.

5.3 Noise Control Code provisions.

5.3.1 In accordance with the provisions of Section 24-216(b) of the Administrative Code of the **City** ("Administrative Code"), Noise Abatement Contract Compliance, devices and activities which will be operated, conducted, constructed or manufactured pursuant to this **Contract** and which are subject to the provisions of the **City** Noise Control Code shall be operated, conducted, constructed, or manufactured without causing a violation of the Administrative Code. Such devices and activities shall incorporate advances in the art of noise control development for the kind and level of noise emitted or produced by such devices and activities, in accordance with regulations issued by the **Commissioner** of the **City** Department of Environmental Protection.

5.3.2 The **Contractor** agrees to comply with Section 24-219 of the Administrative Code and implementing rules codified at 15 Rules of the City of New York ("RCNY") Section 28-100 *et seq*. In accordance with such provisions, the **Contractor**, if the **Contractor** is the responsible party under such regulations, shall prepare and post a Construction Noise Mitigation Plan at each **Site**, in which the **Contractor** shall certify that all construction tools and equipment have been maintained so that they operate at normal manufacturers operating specifications. If the **Contractor** cannot make this certification, it must have in place an Alternative Noise Mitigation Plan approved by the **City** Department of Environmental Protection. In addition, the **Contractor**'s certified Construction Noise Mitigation Plan is subject inspection by the **City** Department of Environmental Protection in accordance with Section 28-101 of Title 15 of RCNY. No **Contract Work** may take place at a **Site** unless there is a Construction Noise Mitigation Plan or approved Alternative Noise Mitigation Plan in place. In addition, the **Contractor** shall create and implement a noise mitigation training program. Failure to comply with these requirements may result in fines and other penalties pursuant to the applicable provisions of the Administrative Code and RCNY.

5.4 Ultra Low Sulfur Diesel Fuel: In accordance with the provisions of Section 24-163.3 of the Administrative Code, the **Contractor** specifically agrees as follows:

5.4.1 Definitions. For purposes of this Article 5.4, the following definitions apply:

5.4.1(a) "Contractor" means any person or entity that enters into a Public Works Contract with a **City Agency**, or any person or entity that enters into an agreement with such person or entity, to perform work or provide labor or services related to such Public Works Contract.

5.4.1(b) "Motor Vehicle" means any self-propelled vehicle designed for transporting

persons or property on a street or highway.

5.4.1(c) "Nonroad Engine" means an internal combustion engine (including the fuel system) that is not used in a Motor Vehicle or a vehicle used solely for competition,or that is not subject to standards promulgated under Section 7411 or Section 7521 of Title 42 of the United States Code, except that this term shall apply to internal combustion engines used to power generators, compressors or similar equipment used in any construction program or project.

5.4.1(d) "Nonroad Vehicle" means a vehicle that is powered by a Nonroad Engine, fifty (50) horsepower and greater, and that is not a Motor Vehicle or a vehicle used solely for competition, which shall include, but not be limited to, excavators, backhoes, cranes, compressors, generators, bulldozers, and similar equipment, except that this term shall not apply to horticultural maintenance vehicles used for landscaping purposes that are powered by a Nonroad Engine of sixty-five (65) horsepower or less and that are not used in any construction program or project.

5.4.1(e) "Public Works Contract" means a contract with a **City Agency** for a construction program or project involving the construction, demolition, restoration, rehabilitation, repair, renovation, or abatement of any building, structure, tunnel, excavation, roadway, park or bridge; a contract with a **City Agency** for the preparation for any construction program or project involving the construction, demolition, restoration, rehabilitation, repair, renovation, or abatement of any building, structure, tunnel, excavation, roadway, park or bridge; or a contract with a **City Agency** for any final work involved in the completion of any construction program or project involving the construction, demolition, restoration, rehabilitation, repair, renovation, or abatement of any building, structure, tunnel, excavation, roadway, park or bridge.

5.4.1(f) "Ultra Low Sulfur Diesel Fuel" means diesel fuel that has a sulfur content of no more than fifteen parts per million (15 ppm).

5.4.2 Ultra Low Sulfur Diesel Fuel

5.4.2(a) All **Contractors** shall use Ultra Low Sulfur Diesel Fuel in diesel-powered Nonroad Vehicles in the performance of this **Contract**.

5.4.2(b) Notwithstanding the requirements of Article 5.4.2(a), **Contractors** may use diesel fuel that has a sulfur content of no more than thirty parts per million (30 ppm)to fulfill the requirements of this Article 5.4.2, where the Commissioner of the **City** Department of Environmental Protection ("DEP Commissioner") has issued a determination that a sufficient quantity of Ultra Low Sulfur Diesel Fuel is not available to meet the needs of **Agencies** and **Contractors**. Any such determination shall expire after six (6) months unless renewed.

5.4.2(c) **Contractors** shall not be required to comply with this Article 5.4.2 where the **City Agency** letting this **Contract** makes a written finding, which is approved, in writing, by the DEP Commissioner, that a sufficient quantity of Ultra Low Sulfur Diesel Fuel, or diesel fuel that has a sulfur content of no more than thirty parts per million (30 ppm) is not available to meet the requirements of Section 24-163.3 of the Administrative Code, provided that such **Contractor** in its fulfillment of the requirements of this **Contract**, to the extent practicable, shall use whatever quantity of Ultra Low Sulfur Diesel Fuel or diesel fuel that has a sulfur content of no more than thirty parts per

million (30 ppm) is available. Any finding made pursuant to this Article 5.4.2(c) shall expire after sixty (60) **Days**, at which time the requirements of this Article 5.4.2 shall be in full force and effect unless the **City Agency** renews the finding in writing and such renewal is approved by the DEP Commissioner.

5.4.2(d) **Contractors** may check on determinations and approvals issued by the DEP Commissioner pursuant to Section 24-163.3 of the Administrative Code, if any, at www.dep.nyc.gov or by contacting the **City Agency** letting this **Contract**.

5.4.2(e) The requirements of this Article 5.4.2 do not apply where they are precluded by federal or State funding requirements or where the **Contract** is an emergency procurement.

5.4.3 Best Available Technology

5.4.3(a) All **Contractors** shall utilize the best available technology for reducing the emission of pollutants for diesel-powered Nonroad Vehicles in the performance of this **Contract**. For determinations of best available technology for each type of diesel-powered Nonroad Vehicle, **Contractors** shall comply with the regulations of the **City** Department of Environmental Protection, as and when adopted, Chapter 14 of Title 15 of the Rules of the City of New York (RCNY). The **Contractor** shall fully document all steps in the best available technology selection process and shall furnish such documentation to the **City Agency** or the DEP Commissioner upon request. The **Contractor** shall retain all documentation generated in the best available technology selection process for as long as the selected best available technology is in use.

5.4.3(b) No **Contractor** shall be required to replace best available technology for reducing the emission of pollutants or other authorized technology utilized for a diesel-powered Nonroad Vehicle in accordance with the provisions of this Article 5.4.3 within three (3) years of having first utilized such technology for such vehicle.

5.4.3(c) This Article 5.4.3 shall not apply to any vehicle used to satisfy the requirements of a specific Public Works Contract for fewer than twenty (20) **Days**.

5.4.3(d) The **Contractor** shall not be required to comply with this Article 5.4.3 with respect to a diesel-powered Nonroad Vehicle under the following circumstances:

5.4.3(d)(i) Where the **City Agency** makes a written finding, which is approved, in writing, by the DEP Commissioner, that the best available technology for reducing the emission of pollutants as required by this Article 5.4.3 is unavailable for such vehicle, the **Contractor** shall use whatever technology for reducing the emission of pollutants, if any, is available and appropriate for such vehicle.

5.4.3(d)(ii) Where the DEP Commissioner has issued a written waiver based upon the Contractor having demonstrated to the DEP Commissioner that the use of the best available technology for reducing the emission of pollutants might endanger the operator of such vehicle or those working near such vehicle, due to engine malfunction, the **Contractor** shall use whatever technology for reducing the emission of pollutants, if any, is available and appropriate for such vehicle, which would not endanger the operator of such vehicle or those working near such vehicle.

5.4.3(d)(iii) In determining which technology to use for the purposes of Articles 5.4.3(d)(i) and 5.4.3(d)(ii) above, the **Contractor** shall primarily consider the reduction in emissions of particulate matter and secondarily consider the reduction in emissions of nitrogen oxides associated with the use of such technology, which shall in no event result in an increase in the emissions of either such pollutant.

5.4.3(d)(iv) The **Contractor** shall submit requests for a finding or a waiver pursuant to this Article 5.4.3(d) in writing to the DEP Commissioner, with a copy to the **ACCO** of the **City Agency** letting this **Contract**. Any finding or waiver made or issued pursuant to Articles 5.4.3(d)(i) and 5.4.3(d)(ii) above shall expire after one hundred eighty (180) **Days**, at which time the requirements of Article 5.4.3(a) shall be in full force and effect unless the **City Agency** renews the finding, in writing, and the DEP Commissioner approves such finding, in writing, or the DEP Commissioner renews the waiver, in writing.

5.4.3(e) The requirements of this Article 5.4.3 do not apply where they are precluded by federal or State funding requirements or where the **Contract** is an emergency procurement.

5.4.4 Section 24-163 of the Administrative Code. The **Contractor** shall comply with Section 24-163 of the Administrative Code related to the idling of the engines of motor vehicles while parking.

5.4.5 Compliance

5.4.5(a) The **Contractor's** compliance with Article 5.4 may be independently monitored. If it is determined that the **Contractor** has failed to comply with any provision of Article 5.4, any costs associated with any independent monitoring incurred by the **City** shall be reimbursed by the **Contractor**.

5.4.5(b) Any **Contractor** who violates any provision of Article 5.4, except as provided in Article 5.4.5(c) below, shall be liable for a civil penalty between the amounts of one thousand ($1,000) and ten thousand ($10,000) dollars, in addition to twice the amount of money saved by such **Contractor** for failure to comply with Article 5.4.

5.4.5(c) No **Contractor** shall make a false claim with respect to the provisions of Article 5.4 to a **City Agency**. Where a **Contractor** has been found to have done so, such **Contractor** shall be liable for a civil penalty of twenty thousand ($20,000) dollars, in addition to twice the amount of money saved by such **Contractor** in association with having made such false claim.

5.4.6 Reporting

5.4.6(a) For all Public Works Contracts covered by this Article 5.4, the **Contractor** shall report to the **City Agency** the following information:

5.4.6(a)(i) The total number of diesel-powered Nonroad Vehicles used to fulfill the requirements of this Public Works Contract;

5.4.6(a)(ii) The number of such Nonroad Vehicles that were powered by Ultra Low Sulfur Diesel Fuel;

5.4.6(a)(iii) The number of such Nonroad Vehicles that utilized the best available technology for reducing the emission of pollutants, including a breakdown by vehicle model and the type of technology;

5.4.6(a)(iv) The number of such Nonroad Vehicles that utilized such other authorized technology in accordance with Article 5.4.3, including a breakdown by vehicle model and the type of technology used for each such vehicle;

5.4.6(a)(v) The locations where such Nonroad Vehicles were used; and

5.4.6(a)(vi) Where a determination is in effect pursuant to Article 5.4.2(b) or 5.4.2(c), detailed information concerning the **Contractor's** efforts to obtain Ultra Low Sulfur Diesel Fuel or diesel fuel that has a sulfur content of no more than thirty parts per million (30 ppm).

5.4.6(b) The **Contractor** shall submit the information required by Article 5.4.6(a) at the completion of **Work** under the Public Works Contract and on a yearly basis no later than August 1 throughout the term of the Public Works Contract. The yearly report shall cover **Work** performed during the preceding fiscal year (July 1 - June 30).

5.5 Ultra Low Sulfur Diesel Fuel. In accordance with the Coordinated Construction Act for Lower Manhattan, as amended:

5.5.1 Definitions. For purposes of this Article 5.5, the following definitions apply:

5.5.1(a) "Lower Manhattan" means the area to the south of and within the following lines: a line beginning at a point where the United States pierhead line in the Hudson River as it exists now or may be extended would intersect with the southerly line of West Houston Street in the Borough of Manhattan extended, thence easterly along the southerly side of West Houston Street to the southerly side of Houston Street, thence easterly along the southerly side of Houston Street to the southerly side of East Houston Street, thence northeasterly along the southerly side of East Houston Street to the point where it would intersect with the United States pierhead line in the East River as it exists now or may be extended, including tax lots within or immediately adjacent thereto.

5.5.1(b) "Lower Manhattan Redevelopment Project" means any project in Lower Manhattan that is funded in whole or in part with federal or State funding, or any project intended to improve transportation between Lower Manhattan and the two air terminals in the **City** known as LaGuardia Airport and John F. Kennedy International Airport, or between Lower Manhattan and the air terminal in Newark known as Newark Liberty International Airport, and that is funded in whole or in part with federal funding.

5.5.1(c) "Nonroad Engine" means an internal combustion engine (including the fuel system) that is not used in a Motor Vehicle or a vehicle used solely for competition, or that is not subject to standards promulgated under Section 7411 or Section 7521 of Title 42 of the United States Code, except that this term shall apply to internal combustion engines used to power generators, compressors or similar equipment used in any construction program or project.

5.5.1(d) "Nonroad Vehicle" means a vehicle that is powered by a Nonroad Engine, fifty (50) horsepower (HP) and greater, and that is not a Motor Vehicle or a vehicle used

solely for competition, which shall include, but not be limited to, excavators, backhoes, cranes, compressors, generators, bulldozers, and similar equipment, except that this terms shall not apply to horticultural maintenance vehicles used for landscaping purposes that are powered by a Nonroad Engine of sixty-five (65) HP or less and that are not used in any construction program or project.

5.5.1(e) "Ultra Low Sulfur Diesel Fuel" means diesel fuel that has a sulfur content of no more than fifteen parts per million (15 ppm).

5.5.2 Requirements. **Contractors** and **Subcontractors** are required to use only Ultra Low Sulfur Diesel Fuel to power the diesel-powered Nonroad Vehicles with engine HP rating of fifty (50) HP and above used on a Lower Manhattan Redevelopment Project and, where practicable, to reduce the emission of pollutants by retrofitting such Nonroad Vehicles with oxidation catalysts, particulate filters, or technology that achieves lowest particulate matter emissions.

5.6 Pesticides. In accordance with Section 17-1209 of the Administrative Code, to the extent that the **Contractor** or any **Subcontractor** applies pesticides to any property owned or leased by the **City**, the **Contractor,** and any **Subcontractor** shall comply with Chapter 12 of the Administrative Code.

5.7 Waste Treatment, Storage, and Disposal Facilities and Transporters. In connection withthe **Work**, the **Contractor** and any **Subcontractor** shall use only those waste treatment, storage, and disposal facilities and waste transporters that possess the requisite license, permit or other governmental approval necessary to treat, store, dispose, or transport the waste, materials or hazardous substances.

5.8 Environmentally Preferable Purchasing. The **Contractor** shall ensure that products purchased or leased by the **Contractor** or any **Subcontractor** for the **Work** that are not specified by the **City** or are submitted as equivalents to a product specified by the **City** comply with the requirements of the New York City Environmentally Preferable Purchasing Program contained in Chapter 11 of Title 43 of the RCNY, pursuant to Chapter 3 of Title 6 of the Administrative Code.

ARTICLE 6. INSPECTION

6.1 During the progress of the **Work** and up to the date of **Final Acceptance**, the **Contractor** shall at all times afford the representatives of the **City** every reasonable, safe, and proper facility for inspecting all **Work** done or being done at the **Site** and also for inspecting the manufacture or preparation of materials and equipment at the place of such manufacture or preparation.

6.2 The **Contractor's** obligation hereunder shall include the uncovering or taking down of finished **Work** and its restoration thereafter; provided, however, that the order to uncover, take down and restore shall be in writing, and further provided that if **Work** thus exposed proves satisfactory, and if the **Contractor** has complied with Article 6.1, such uncovering or taking down and restoration shall be considered an item of **Extra Work** to be paid for in accordance with the provisions of Article 26. If the **Work** thus exposed proves unsatisfactory, the **City** has no obligation to compensate the **Contractor** for the uncovering, taking down or restoration.

6.3 Inspection and approval by the **Commissioner**, the **Engineer**, **Project Manager**, or **Resident Engineer**, of finished **Work** or of **Work** being performed, or of materials and equipment at the place of manufacture or preparation, shall not relieve the **Contractor** of its obligation to perform the **Work** in strict accordance with the **Contract**. Finished or unfinished **Work** not found to be in strict accordance with the

Contract shall be replaced as directed by the **Engineer**, even though such **Work** may have been previously approved and paid for. Such corrective **Work** is **Contract Work** and shall not be deemed **Extra Work**.

6.4 Rejected **Work** and materials shall be promptly taken down and removed from the **Site**, which must at all times be kept in a reasonably clean and neat condition.

ARTICLE 7. PROTECTION OF WORK AND OF PERSONS AND PROPERTY; NOTICESAND INDEMNIFICATION

7.1 During the performance of the **Work** and up to the date of **Final Acceptance**, the **Contractor** shall be under an absolute obligation to protect the finished and unfinished **Work** against any damage, loss, injury, theft and/or vandalism and in the event of such damage, loss, injury, theft and/or vandalism,it shall promptly replace and/or repair such **Work** at the **Contractor's** sole cost and expense, as directed by the **Resident Engineer**. The obligation to deliver finished **Work** in strict accordance with the **Contract** prior to **Final Acceptance** shall be absolute and shall not be affected by the **Resident Engineer's** approval of, or failure to prohibit, the **Means and Methods of Construction** used by the **Contractor**.

7.2 During the performance of the **Work** and up to the date of **Final Acceptance**, the **Contractor** shall take all reasonable precautions to protect all persons and the property of the **City** and of others from damage, loss or injury resulting from the **Contractor's**, and/or its **Subcontractors'** operations under this **Contract.** The **Contractor's** obligation to protect shall include the duty to provide, place or replace, and adequately maintain at or about the **Site** suitable and sufficient protection such as lights, barricades, and enclosures.

7.3 The **Contractor** shall comply with the notification requirements set forth below in the event of any loss, damage or injury to **Work**, persons or property, or any accidents arising out of the operations of the **Contractor** and/or its **Subcontractors** under this **Contract**.

7.3.1 The **Contractor** shall make a full and complete report in writing to the **Resident Engineer** within three (3) **Days** after the occurrence.

7.3.2 The **Contractor** shall also send written notice of any such event to all insurance carriers that issued potentially responsive policies (including commercial general liability insurance carriers for events relating to the **Contractor**'s own employees) no later than twenty (20) days after such event and again no later than twenty (20) days after the initiation of any claim and/or action resulting therefrom. Such notice shall contain the following information: the number of the insurance policy, the name of the Named Insured, the date and location of the incident, and the identity of the persons injured or property damaged. For any policy on which the **City** and/or the **Engineer**, **Architect**, or **Project Manager** are Additional Insureds, such notice shall expressly specify that "this notice is being given on behalf of the City of New York as Additional Insured, such other AdditionalInsureds, as well as the Named Insured."

7.3.2(a) Whenever such notice is sent under a policy on which the **City** is an Additional Insured, the **Contractor** shall provide copies of the notice to the **Comptroller,** the **Commissioner** and the **City** Corporation Counsel. The copy to the **Comptroller** shall be sent to the Insurance Unit, NYC Comptroller's Office, 1 Centre Street – Room 1222, New York, New York, 10007. The copy to the **Commissioner** shall be sent to the address set forth in Schedule A of the General Conditions. The copy to the **City** Corporation Counsel shall be sent to Insurance Claims Specialist, Affirmative Litigation

Division, New York City Law Department, 100 Church Street, New York, New York 10007.

7.3.2(b) If the **Contractor** fails to provide any of the foregoing notices to anyappropriate insurance carrier(s) in a timely and complete manner, the **Contractor**shall indemnify the **City** for all losses, judgments, settlements, and expenses, including reasonable attorneys' fees, arising from an insurer's disclaimer of coverage citing late notice by or on behalf of the **City**.

7.4 To the fullest extent permitted by law, the **Contractor** shall defend, indemnify, and hold the **City**, its employees, and officials (the "Indemnitees") harmless against any and all claims (including but not limited to claims asserted by any employee of the **Contractor** and/or its **Subcontractors**) and costs and expenses of whatever kind (including but not limited to payment or reimbursement of attorneys' fees and disbursements) allegedly arising out of or in any way related to the operations of the **Contractor** and/or its **Subcontractors** in the performance of this **Contract** or from the **Contractor's** and/or its **Subcontractors'** failure to comply with any of the provisions of this **Contract** or of the **Law**. Such costs and expenses shall include all those incurred in defending the underlying claim and those incurred in connection with the enforcement of this Article 7.4 by way of cross-claim, third-party claim, declaratory action or otherwise. The parties expressly agree that the indemnification obligation hereunder contemplates (1) full indemnity in the event of liability imposed against the Indemnitees without negligence and solely by reason of statute, operation of **Law** or otherwise; and (2) partial indemnity in the event of any actual negligence on the part of the Indemnitees either causing orcontributing to the underlying claim (in which case, indemnification will be limited to any liability imposed over and above that percentage attributable to actual fault whether by statute, by operation of **Law**, or otherwise). Where partial indemnity is provided hereunder, all costs and expenses shall be indemnified on a pro rata basis.

7.4.1 Indemnification under Article 7.4 or any other provision of the **Contract** shall operate whether or not **Contractor** or its **Subcontractors** have placed and maintained the insurance specified under Article 22.

7.5 The provisions of this Article 7 shall not be deemed to create any new right of action in favor of third parties against the **Contractor** or the **City**.

CHAPTER III: TIME PROVISIONS

ARTICLE 8. COMMENCEMENT AND PROSECUTION OF THE WORK

8.1 The **Contractor** shall commence the **Work** on the date specified in the **Notice to Proceed** or the **Order to Work**. The time for performance of the **Work** under the **Contract** shall be computed from the date specified in the **Notice to Proceed** or the **Order to Work**. **TIME BEING OF THE ESSENCE** to the **City**, the **Contractor** shall thereafter prosecute the **Work** diligently, using such **Means and Methods of Construction** as are in accord with Article 4 herein and as will assure its completion not later than the date specified in this Contract, or on the date to which the time for completion may be extended.

ARTICLE 9. PROGRESS SCHEDULES

9.1 To enable the **Work** to be performed in an orderly and expeditious manner, the **Contractor**, within fifteen (15) **Days** after the **Notice to Proceed** or **Order to Work**, unless otherwise directed by the **Engineer**, shall submit to the **Engineer** a proposed progress schedule based on the Critical Path Methodin the form of

a bar graph or in such other form as specified by the **Engineer**, and monthly cash flow requirements, showing:

9.1.1 The anticipated time of commencement and completion of each of the variousoperations to be performed under this **Contract**; and

9.1.2 The sequence and interrelation of each of these operations with the others and with those of other related contracts; and

9.1.3 The estimated time required for fabrication or delivery, or both, of all materials and equipment required for the **Work**, including the anticipated time for obtaining required approvals pursuant to Article 10; and

9.1.4 The estimated amount in dollars the **Contractor** will claim on a monthly basis.

9.2 The proposed schedule shall be revised as directed by the **Engineer**, until finally approved by the **Engineer**, and after such approval, subject to the provisions of Article 11, shall be strictly adhered to by the **Contractor**.

9.3 If the **Contractor** shall fail to adhere to the approved progress schedule, or to the schedule as revised pursuant to Article 11, it shall promptly adopt such other or additional **Means and Methods of Construction**, at its sole cost and expense, as will make up for the time lost and will assure completion in accordance with the approved progress schedule. The approval by the **City** of a progress schedule which is shorter than the time allotted under the **Contract** shall not create any liability for the **City** if the approved progress schedule is not met.

9.4 The **Contractor** will not receive any payments until the proposed progress schedule is submitted.

ARTICLE 10. REQUESTS FOR INFORMATION OR APPROVAL

10.1 From time to time as the **Work** progresses and in the sequence indicated by the approved progress schedule, the **Contractor** shall submit to the **Engineer** a specific request in writing for each item of information or approval required by the **Contractor**. These requests shall state the latest date upon which the information or approval is actually required by the **Contractor**, and shall be submitted in a reasonable time in advance thereof to provide the **Engineer** a sufficient time to act upon such submissions, or any necessary re-submissions thereof.

10.2 The **Contractor** shall not have any right to an extension of time on account of delays due to the **Contractor's** failure to submit requests for the required information or the required approval in accordance with the above requirements.

ARTICLE 11. NOTICE OF CONDITIONS CAUSING DELAY AND DOCUMENTATION OF DAMAGES CAUSED BY DELAY

11.1 After the commencement of any condition which is causing or may cause a delay in completion of the **Work**, including conditions for which the **Contractor** may be entitled to an extension of time, the following notifications and submittals are required:

11.1.1 Within fifteen (15) **Days** after the **Contractor** becomes aware or reasonably should be

aware of each such condition, the **Contractor** must notify the **Resident Engineer** or **Engineer**, as directed by the **Commissioner**, in writing of the existence, nature and effect of such condition upon the approved progress schedule and the **Work**, and must state why and in what respects, if any, the condition is causing or may cause a delay. Such notice shall include a description of the construction activities that are or could be affected by the condition and may include any recommendations the **Contractor** may have to address the delay condition and any activities the **Contractor** may take to avoid or minimize the delay.

11.1.2 If the **Contractor** shall claim to be sustaining damages for delay as provided for in this Article 11,within forty-five (45) **Days** from the time such damages are first incurred for each such condition, the **Contractor** shall submit to the **Commissioner** a verified written statement of the details and estimates of the amounts of such damages, including categories of expected damages and projected monthly costs, together with documentary evidence of such damages as the **Contractor** may have at the time of submission ("statement of delay damages"), as further detailed in Article 11.6. The **Contractor** may submit the above statement within such additional time as may be granted by the **Commissioner** in writing upon written request therefor.

11.1.3 Articles 11.1.1 and 11.1.2 do not relieve the **Contractor** of its obligation to comply with the provisions of Article 44.

11.2 Failure of the **Contractor** to strictly comply with the requirements of Article 11.1.1 may, inthe discretion of the **Commissioner**, be deemed sufficient cause to deny any extension of time on account of delay arising out of such condition. Failure of the **Contractor** to strictly comply with the requirements of both Articles 11.1.1 and 11.1.2 shall be deemed a conclusive waiver by the **Contractor** of any and all claims for damages for delay arising from such condition and no right to recover on such claims shall exist.

11.3 When appropriate and directed by the **Engineer**, the progress schedule shall be revised by the **Contractor** until finally approved by the **Engineer**. The revised progress schedule must be strictly adhered to by the **Contractor**.

11.4 Compensable Delays

11.4.1 The **Contractor** agrees to make claim only for additional costs attributable to delayin the performance of this **Contrac**t necessarily extending the time for completion of the **Work** or resulting from acceleration directed by the **Commissioner** and required to maintain the progress schedule, occasioned solely by any act or omission to act of the **City** listed below. The **Contractor** also agrees that delay from any other cause shall be compensated, if at all, solely by an extension of time to complete the performance of the **Work**.

11.4.1.1 The failure of the **City** to take reasonable measures to coordinate and progress the **Work** to the extent required by the **Contract**, except that the City shall not be responsible for the **Contractor's** obligation to coordinate and progress the **Work** of its **Subcontractors**.

11.4.1.2 Unreasonable delays attributable to the review of shop drawings, the issuance of change orders, or the cumulative impact of change orders that were not brought about by any act or omission of the **Contractor**.

11.4.1.3 The unavailability of the **Site** caused by acts or omissions of the **City**..

11.4.1.4 The issuance by the **Engineer** of a stop work order that was not brought about through any act or omission of the **Contractor**.

11.4.1.5 Differing site conditions or environmental hazards that were neitherknown nor reasonably ascertainable on a pre-bid inspection of the **Site**or review

of the bid documents or other publicly available sources, and that are not ordinarily encountered in the **Project**'s geographical area or neighborhood or in the type of **Work** to be performed.

11.4.1.6 Delays caused by the **City's** bad faith or its willful, malicious, or grossly negligent conduct;

11.4.1.7 Delays not contemplated by the parties;

11.4.1.8 Delays so unreasonable that they constitute an intentional abandonment of the **Contract** by the **City**; and

11.4.1.9 Delays resulting from the **City's** breach of a fundamental obligation of the **Contract**.

11.4.2 No claim may be made for any alleged delay in **Substantial Completion** of the **Work** if the **Work** will be or is substantially completed by the date of **Substantial Completion** provided for in Schedule A unless acceleration has been directed by the **Commissioner** to meet the date of **Substantial Completion** set forth in Schedule A, or unless there is a provision in the **Contract** providing for additional compensation for early completion.

11.4.3 The provisions of this Article 11 apply only to claims for additional costs attributable to delay and do not preclude determinations by the **Commissioner** allowing reimbursements for additional costs for **Extra Work** pursuant to Articles 25 and 26 of this **Contract**. To the extent that any cost attributable to delay is reimbursed as part of a change order, no additional claim for compensation under this Article 11 shall be allowed.

11.5 Non-Compensable Delays. The **Contractor** agrees to make no claim for, and is deemed to have included in its bid prices for the various items of the **Contract**, the extra/additional costs attributable to any delays caused by or attributable to the items set forth below. For such items, the **Contractor** shall be compensated, if at all, solely by an extension of time to complete the performance of the **Work**, in accordance with the provisions of Article 13. Such extensions of time will be granted, if at all, pursuant to the grounds set forth in Article 13.3.

11.5.1 The acts or omissions of any third parties, including but not limited to **Other Contractors**, public/ governmental bodies (other than **City Agencies**), utilities or private enterprises, who are disclosed in the **Contract Documents** or are ordinarily encountered or generally recognized as related to the **Work**;

11.5.2 Any situation which was within the contemplation of the parties at the time of entering into the **Contract**, including any delay indicated or disclosed in the **Contract Documents** or that would be generally recognized by a reasonably prudent contractor as related to the nature of the **Work**, and/or the existence of any facility or appurtenance owned, operated or maintained by any third party, as indicated or disclosed in the **Contract Documents** or ordinarily encountered or generally recognized as related to the nature of the **Work**;

11.5.3 Restraining orders, injunctions or judgments issued by a court which were caused by a Contractor's submission, action or inaction or by a Contractor's **Means and Methods of Construction**, or by third parties, unless such order, injunction or judgment was the result of an act or omission by the **City**;

11.5.4 Any labor boycott, strike, picketing, lockout or similar situation;

11.5.5 Any shortages of supplies or materials, or unavailability of equipment, required by the **Contract Work**;

11.5.6 Climatic conditions, storms, floods, droughts, tidal waves, fires, hurricanes, earthquakes, landslides or other catastrophes or acts of God, or acts of war or of the public enemy or terrorist acts, including the **City's** reasonable responses thereto; and

11.5.7 **Extra Work** which does not significantly affect the overall completion of the **Contract**, reasonable delays in the review or issuance of change orders or field orders and/or in shop drawing reviews or approvals.

11.6 Required Content of Submission of Statement of Delay Damages

11.6.1 In the verified written statement of delay damages required by Article 11.1.2, the following information shall be provided by the **Contractor**:

11.6.1.1 For each delay, the start and end dates of the claimed periods of delay and, in addition, a description of the operations that were delayed, an explanation of how they were delayed, and the reasons for the delay, including identifying the applicable act or omission of the City listed in Article 11.4.

11.6.1.2 A detailed factual statement of the claim providing all necessary dates, locations and items of **Work** affected by the claim.

11.6.1.3 The estimated amount of additional compensation sought and a breakdown of that amount into categories as described in Article 11.7.

11.6.1.4 Any additional information requested by the **Commissioner**.

11.7 Recoverable Costs

11.7.1 Delay damages may be recoverable for the following costs actually and necessarily incurred in the performance of the **Work**:

11.7.1.1 Direct labor, including payroll taxes (subject to statutory wage caps) and supplemental benefits, based on time and materials records;

11.7.1.2 Necessary materials (including transportation to the **Site**), based on time and material records;

11.7.1.3 Reasonable rental value of necessary plant and equipment other than small tools, plus fuel/energy costs according to the applicable formula set forth in Articles 26.2.4 and/or 26.2.8, based on time and material records;

11.7.1.4 Additional insurance and bond costs;

11.7.1.5 Extended **Site** overhead, field office rental, salaries of field office staff, on-site project managers and superintendents, field office staff vehicles, **Project-**specific storage, field office utilities and telephone, and field office consumables;

11.7.1.6 Labor escalation costs based on actual costs;

11.7.1.7 Materials and equipment escalation costs based on applicable industry indices unless documentation of actual increased cost is provided;

11.7.1.8 Additional material and equipment storage costs based on actual documented costs and additional costs necessitated by extended manufacturer warranty periods; and

11.7.1.9 Extended home office overhead calculated based on the following formula:

(1) Subtract from the original **Contract** amount the amount earned by original contractual **Substantial Completion** date (not

including change orders);

(2) Remove 15% overhead and profit from the calculation in item (1) by dividing the results of item (1) by 1.15;

(3) Multiply the result of item (2) by 7.25% for the total home office overhead;

(4) Multiply the result of item (3) by 7.25% for the total profit; and

(5) The total extended home office overhead will be the total of items (3) and (4).

11.7.2 Recoverable Subcontractor Costs. When the **Work** is performed by a **Subcontractor**, the **Contractor** may be paid the actual and necessary costs of such subcontracted **Work** as outlined above in Articles 11.7.1.1 through 11.7.1.8, and an additional overhead of 5% of the costs outlined in Articles 11.7.1.1 through 11.7.1.3.

11.7.3 Non-Recoverable Costs. The parties agree that the **City** will have no liability for the following items and the **Contractor** agrees it shall make no claim for the following items:

11.7.3.1 Profit, or loss of anticipated or unanticipated profit, except as provided in Article 11.7.1.9;

11.7.3.2 Consequential damages, including, but not limited to, construction or bridge loans or interest paid on such loans, loss of bonding capacity, bidding opportunities, or interest in investment, or any resulting insolvency;

11.7.3.3 Indirect costs or expenses of any nature except those included in Article 11.7.1;

11.7.3.4 Direct or indirect costs attributable to performance of **Work** where the **Contractor**, because of situations or conditions within its control, hasnot progressed the **Work** in a satisfactory manner; and

11.7.3.5 Attorneys' fees and dispute and claims preparation expenses.

11.8 Any claims for delay under this Article 11 are not subject to the jurisdiction of the Contract Dispute Resolution Board pursuant to the dispute resolution process set forth in Article 27.

11.9 Any compensation provided to the **Contractor** in accordance with this Article 11 will be made pursuant to a claim filed with the **Comptroller**. Nothing in this Article 11 extendsthe time for the **Contractor** to file an action with respect to a claim within six months after **Substantial Completion** pursuant to Article 56.

ARTICLE 12. COORDINATION WITH OTHER CONTRACTORS

12.1 During the progress of the **Work**, **Other Contractors** may be engaged in performing other work or may be awarded other contracts for additional work on this **Project**. In that event, the **Contractor** shall coordinate the **Work** to be done hereunder with the work of such **Other Contractors** and the **Contractor** shall fully cooperate with such **Other Contractors** and carefully fit its own **Work** to that provided under other contracts as may be directed by the **Engineer**. The **Contractor** shall not commit or permit any act which will interfere with the performance of work by any **Other Contractors**.

12.2 If the **Engineer** determines that the **Contractor** is failing to coordinate its **Work** with the work of **Other Contractors** as the **Engineer** has directed, then the **Commissioner** shall have the right to withhold any payments otherwise due hereunder until the **Contractor** completely complies with the **Engineer's** directions.

12.3 The **Contractor** shall notify the **Engineer** in writing if any **Other Contractor** on this **Project** is failing to coordinate its work with the **Work** of this **Contract**. If the **Engineer** finds such charges to be true, the **Engineer** shall promptly issue such directions to the **Other Contractor** with respect thereto as the situation may require. The **City** shall not, however, be liable for any damages suffered by any **Other Contractor's** failure to coordinate its work with the **Work** of this **Contract** or by reason of the **Other Contractor's** failure to promptly comply with the directions so issued by the **Engineer**, or by reason of any **Other Contractor's** default in performance, it being understood that the **City** does not guarantee the responsibility or continued efficiency of any contractor. The **Contractor** agrees to make no claim against the **City** for any damages relating to or arising out of any directions issued by the **Engineer** pursuant to this Article 12 (including but not limited to the failure of any **Other Contractor** to comply or promptly comply with such directions), or the failure of any **Other Contractor** to coordinate its work, or the default in performance of any **Other Contractor**.

12.4 The **Contractor** shall indemnify and hold the **City** harmless from any and all claims or judgments for damages and from costs and expenses to which the **City** may be subjected or which it may suffer or incur by reason of the **Contractor's** failure to comply with the **Engineer's** directions promptly; and the **Comptroller** shall have the right to exercise the powers reserved in Article 23 with respect to any claims which may be made for damages due to the **Contractor's** failure to comply with the **Engineer's** directions promptly. Insofar as the facts and **Law** relating to any claim would preclude the **City** from being completely indemnified by the **Contractor**, the **City** shall be partially indemnified by the **Contractor** to the fullest extent provided by **Law**.

12.5 Should the **Contractor** sustain any damage through any act or omission of any **Other Contractor** having a contract with the **City** for the performance of work upon the **Site** or of work which may be necessary to be performed for the proper prosecution of the **Work** to be performed hereunder, or through any act or omission of a subcontractor of such **Other Contractor**, the **Contractor** shall have no claim against the **City** for such damage, but shall have a right to recover such damage from the **Other**
12.5 **Contractor** under the provision similar to the following provisions which apply to this Contract and have been or will be inserted in the contracts with such Other Contractors:

> 12.5.1 Should any **Other Contractor** having or who shall hereafter have a contract with the **City** for the performance of work upon the **Site** sustain any damage through any act or omission of the **Contractor** hereunder or through any act or omission of any **Subcontractor** of the **Contractor**, the **Contractor** agrees to reimburse such **Other Contractor** for all such damages and to defend at its own expense any action based upon such claim and if any judgment or claim (even if the allegations of the action are without merit) against the **City** shall be allowed the **Contractor** shall pay or satisfy such judgment or claim and pay all costs and expenses in connection therewith and agrees to indemnify and hold the **City** harmless from all such claims. Insofar as the facts and **Law** relating to any claim would preclude the **City** from being completely indemnified by the **Contractor**, the **City** shall be partially indemnified by the **Contractor** to the fullest extent provided by **Law**.

12.6 The **City's** right to indemnification hereunder shall in no way be diminished, waived or discharged by its recourse to assessment of liquidated damages as provided in Article 15, or by the exercise of any other remedy provided for by **Contract** or by **Law**.

ARTICLE 13. EXTENSION OF TIME FOR PERFORMANCE

13.1 If performance by the **Contractor** is delayed for a reason set forth in Article 13.3, the **Contractor** may be allowed a reasonable extension of time in conformance with this Article 13 and the **PPB**

Rules.

13.2 Any extension of time may be granted only by the **ACCO** or by the Board for the Extension of Time (hereafter "Board") (as set forth below) upon written application by the **Contractor**.

13.3 Grounds for Extension: If such application is made, the **Contractor** shall be entitled to an extension of time for delay in completion of the **Work** caused solely:

13.3.1 By the acts or omissions of the **City**, its officials, agents or employees; or

13.3.2 By the act or omissions of **Other Contractors** on this **Project**; or

13.3.3 By supervening conditions entirely beyond the control of either party hereto (such as, but not limited to, acts of God or the public enemy, excessive inclement weather, war or other national emergency making performance temporarily impossible or illegal, or strikes or labor disputes not brought about by any act or omission of the **Contractor**).

13.3.4 The **Contractor** shall, however, be entitled to an extension of time for such causes only for the number of **Days** of delay which the **ACCO** or the Board may determine to be due solely to such causes, and then only if the **Contractor** shall have strictly complied with all of the requirements of Articles 9 and 10.

13.4 The **Contractor** shall not be entitled to receive a separate extension of time for each of several causes of delay operating concurrently, but, if at all, only for the actual period of delay in completion of the **Work** as determined by the **ACCO** or the Board, irrespective of the number of causes contributing to produce such delay. If one of several causes of delay operating concurrently results from any act, fault or omission of the **Contractor** or of its **Subcontractors** or **Materialmen**, and would of itself (irrespective of the concurrent causes) have delayed the **Work**, no extension of time will be allowed for the period ofdelay resulting from such act, fault or omission.

13.5 The determination made by the **ACCO** or the Board on an application for an extension of time shall be binding and conclusive on the **Contractor**.

13.6 The **ACCO** or the Board acting entirely within their discretion may grant an application for an extension of time for causes of delay other than those herein referred.

13.7 Permitting the **Contractor** to continue with the **Work** after the time fixed for its completion has expired, or after the time to which such completion may have been extended has expired, or the making of any payment to the **Contractor** after such time, shall in no way operate as a waiver on the part of the **City** of any of its rights under this **Contract**.

13.8 Application for Extension of Time:

13.8.1 Before the **Contractor's** time extension request will be considered, the **Contractor** shall notify the **ACCO** of the condition which allegedly has caused or is causing the delay, and shall submit a written application to the **ACCO** identifying:

13.8.1(a) The **Contractor**; the registration number; and **Project** description;

13.8.1(b) Liquidated damage assessment rate, as specified in the **Contract**;

13.8.1(c) Original total bid price;

13.8.1(d) The original **Contract** start date and completion date;

13.8.1(e) Any previous time extensions granted (number and duration); and

13.8.1(f) The extension of time requested.

13.8.2 In addition, the application for extension of time shall set forth in detail:

13.8.2(a) The nature of each alleged cause of delay in completing the **Work**;

13.8.2(b) The date upon which each such cause of delay began and ended and the number of **Days** attributable to each such cause;

13.8.2(c) A statement that the **Contractor** waives all claims except for those delineated in the application, and the particulars of any claims which the **Contractor** does not agree to waive. For time extensions for **Substantial Completion** and final completion payments, the application shall include a detailed statement of the dollar amounts of each element of claim item reserved; and

13.8.2(d) A statement indicating the **Contractor's** understanding that the time extension is granted only for purposes of permitting continuation of **Contract** performance and payment for **Work** performed and that the **City** retains its right to conduct an investigation and assess liquidated damages as appropriate in the future.

13.9 Analysis and Approval of Time Extensions:

13.9.1 For time extensions for partial payments, a written determination shall be made by the **ACCO** who may, for good and sufficient cause, extend the time for the performance of the **Contract** as follows:

13.9.1(a) If the **Work** is to be completed within six (6) months, the time for performance may be extended for sixty (60) **Days**;

13.9.1(b) If the **Work** is to be completed within less than one (1) year but more than six (6) months, an extension of ninety (90) **Days** may be granted;

13.9.1(c) If the **Contract** period exceeds one (1) year, besides the extension granted in Article 13.9.1(b), an additional thirty (30) **Days** may be granted for each multipleof six (6) months involved beyond the one (1) year period; or

13.9.1(d) If exceptional circumstances exist, the **ACCO** may extend the time for performance beyond the extensions in Articles 13.9.1(a), 13.9.1(b), and 13.9.1(c). In that event, the **ACCO** shall file with the Mayor's Office of Contract Services a written explanation of the exceptional circumstances.

13.9.2 For extensions of time for **Substantial Completion** and final completion payments, the **Engineer**, in consultation with the **ACCO**, shall prepare a written analysis of the delay (including a preliminary determination of the causes of delay, the beginning and end dates for each such cause of delay, and whether the delays are excusable under the terms of this **Contract**). The report shall be subject to review by and approval of the Board, which shall have authority to question its analysis and determinations and request additional facts or documentation. The report as reviewed and made final by the Board shall be made a part of the **Agency** contract file. Neither the report itself nor anything contained therein shall operate as a

waiver or release of any claim the **City** may have against the **Contractor** for either actual or liquidated damages.

13.9.3 Approval Mechanism for Time Extensions for **Substantial Completion** or Final Completion Payments: An extension shall be granted only with the approval of the Board which is comprised of the **ACCO** of the **Agency**, the **City** Corporation Counsel, and the **Comptroller**, or their authorized representatives.

13.9.4 Neither the granting of any application for an extension of time to the **Contractor** or any **Other Contractor** on this **Project** nor the papers, records or reports related to any application for or grant of an extension of time or determination related thereto shall be referred to or offered in evidence by the **Contractor** or its attorneys in any action or proceeding.

13.10 No Damage for Delay: The **Contractor** agrees to make no claim for damages for delay in the performance of this **Contract** occasioned by any act or omission to act of the **City** or any of its representatives, except as provided for in Article 11.

ARTICLE 14. COMPLETION AND FINAL ACCEPTANCE OF THE WORK

14.1 Date for **Substantial Completion**: The **Contractor** shall substantially complete the **Work** within the time fixed in Schedule A of the General Conditions, or within the time to which such **Substantial Completion** may be extended.

14.2 Determining the Date of **Substantial Completion**: The **Work** will be deemed to be substantially complete when the two conditions set forth below have been met.

14.2.1 Inspection: The **Engineer** or **Resident Engineer**, as applicable, has inspected the **Work** and has made a written determination that it is substantially complete.

14.2.2 Approval of **Final Approved Punch List** and Date for **Final Acceptance**: Following inspection of the **Work**, the **Engineer/Resident Engineer** shall furnish the **Contractor** with a final punch list, specifying all items of **Work** to be completed and proposing dates for the completion of each specified item of **Work**. The **Contractor** shall then submit in writing to the **Engineer/Resident Engineer** within ten (10) **Days** of the **Engineer/Resident Engineer** furnishing the final punch list either acceptance of the dates or proposed alternative dates for the completion of each specified item of **Work**. If the **Contractor** neither accepts the dates nor proposes alternative dates within ten (10) **Days**, the schedule proposed by the **Engineer/Resident Engineer** shall be deemed accepted. If the **Contractor** proposes alternative dates, then, within a reasonable time after receipt, the **Engineer/Resident Engineer**, in a written notification to the **Contractor**, shall approve the **Contractor's** completion dates or, if they are unable to agree, the **Engineer/Resident Engineer** shall establish dates for the completion of each item of **Work**. The latest completion date specified shall be the date for **Final Acceptance** of the **Work**.

14.3 Date of **Substantial Completion**. The date of approval of the **Final Approved Punch List**, shall be the date of **Substantial Completion**. The date of approval of the **Final Approved Punch List** shall be either (a) if the **Contractor** approves the final punch list and proposed dates for completion furnished by the **Engineer/Resident Engineer**, the date of the **Contractor**'s approval; or (b) if the **Contractor** neither accepts the dates nor proposes alternative dates, ten (10) **Days** after the **Engineer/Resident Engineer** furnishes the **Contractor** with a final punch list and proposed dates for completion; or (c) if the **Contractor** proposes alternative dates, the date that the **Engineer/Resident Engineer** sends written notification to the

Contractor either approving the **Contractor**'s proposed alternative dates or establishing dates for the completion for each item of **Work**.

14.4 Determining the Date of **Final Acceptance**: The **Work** will be accepted as final and complete as of the date of the **Engineer**'s/**Resident Engineer**'s inspection if, upon such inspection, the **Engineer/Resident Engineer** finds that all items on the **Final Approved Punch List** are complete andno further **Work** remains to be done. The **Commissioner** will then issue a written determination of **Final Acceptance**.

14.5 Request for Inspection: Inspection of the **Work** by the **Engineer/Resident Engineer** for the purpose of **Substantial Completion** or **Final Acceptance** shall be made within fourteen (14) **Days** after receipt of the **Contractor's** written request therefor.

14.6 Request for Re-inspection: If upon inspection for the purpose of **Substantial Completion** or **Final Acceptance**, the **Engineer/Resident Engineer** determines that there are items of **Work** still to be performed, the **Contractor** shall promptly perform them and then request a re-inspection. If upon re-inspection, the **Engineer/Resident Engineer** determines that the **Work** is substantially complete or finally accepted, the date of such re-inspection shall be the date of **Substantial Completion** or **Final Acceptance**. Re-inspection by the **Engineer/Resident Engineer** shall be made within ten (10) **Days** after receipt of the **Contractor's** written request therefor.

14.7 Initiation of Inspection by the **Engineer/Resident Engineer**: If the **Contractor** does not request inspection or re-inspection of the **Work** for the purpose of **Substantial Completion** or **Final Acceptance**, the **Engineer/Resident Engineer** may initiate such inspection or re-inspection.

ARTICLE 15. LIQUIDATED DAMAGES

15.1 In the event the **Contractor** fails to substantially complete the **Work** within the time fixed for such **Substantial Completion** in Schedule A of the General Conditions, plus authorized time extensions, or if the **Contractor**, in the sole determination of the **Commissioner**, has abandoned the **Work**, the **Contractor** shall pay to the **City** the sum fixed in Schedule A of the General Conditions, for each and every **Day** that the time consumed in substantially completing the **Work** exceeds the time allowed therefor; which said sum, in view of the difficulty of accurately ascertaining the loss which the **City** will suffer by reason of delay in the **Substantial Completion** of the **Work** hereunder, is hereby fixed and agreed as the liquidated damages that the **City** will suffer by reason of such delay, and not as a penalty. This Article 15 shall also apply to the **Contractor** whether or not the **Contractor** is defaulted pursuant to Chapter X of this **Contract**. Neither the failure to assess liquidated damages nor the granting of any time extension shall operate as a waiver or release of any claim the **City** may have against the **Contractor** for either actual or liquidated damages.

15.2 Liquidated damages received hereunder are not intended to be nor shall they be treated as either a partial or full waiver or discharge of the **City's** right to indemnification, or the **Contractor's** obligation to indemnify the **City**, or to any other remedy provided for in this **Contract** or by **Law**.

15.3 The **Commissioner** may deduct and retain out of the monies which may become due hereunder, the amount of any such liquidated damages; and in case the amount which may become due hereunder shall be less than the amount of liquidated damages suffered by the **City**, the **Contractor** shall be liable to pay the difference.

ARTICLE 16. OCCUPATION OR USE PRIOR TO COMPLETION

16.1 Unless otherwise provided for in the **Specifications**, the **Commissioner** may take over, use, occupy or operate any part of the **Work** at any time prior to **Final Acceptance**, upon written notification to the **Contractor**. The **Engineer** or **Resident Engineer**, as applicable, shall inspect the part of the**Work** to be taken over, used, occupied, or operated, and will furnish the **Contractor** with a written statement of the **Work**, if any, which remains to be performed on such part. The **Contractor** shall not object to, nor interfere with, the **Commissioner's** decision to exercise the rights granted by Article 16. In the event the **Commissioner** takes over, uses, occupies, or operates any part of the **Work:**

16.1.1 the **Engineer/Resident Engineer** shall issue a written determination of **Substantial Completion** with respect to such part of the **Work**;

16.1.2 the **Contractor** shall be relieved of its absolute obligation to protect such part of the unfinished **Work** in accordance with Article 7;

16.1.3 the **Contractor's** guarantee on such part of the **Work** shall begin on the date of such use by the **City**; and;

16.1.4 the **Contractor** shall be entitled to a return of so much of the amount retained in accordance with Article 21 as it relates to such part of the **Work**, except so much thereof as may be retained under Articles 24 and 44.

CHAPTER IV: SUBCONTRACTS AND ASSIGNMENTS

ARTICLE 17. SUBCONTRACTS

17.1 The **Contractor** shall not make subcontracts totaling an amount more than the percentage of the total **Contract** price fixed in Schedule A of the General Conditions, without prior written permission from the **Commissioner**. All subcontracts made by the **Contractor** shall be in writing. No **Work** may be performed by a **Subcontractor** prior to the **Contractor** entering into a written subcontract with the **Subcontractor** and complying with the provisions of this Article 17.

17.2 Before making any subcontracts, the **Contractor** shall submit a written statement to the **Commissioner** giving the name and address of the proposed **Subcontractor**; the portion of the **Work** and materials which it is to perform and furnish; the cost of the subcontract; the VENDEX questionnaire if required; the proposed subcontract if requested by the **Commissioner**; and any other information tending to prove that the proposed **Subcontractor** has the necessary facilities, skill, integrity, past experience, and financial resources to perform the **Work** in accordance with the terms and conditions of this **Contract**.

17.3 In addition to the requirements in Article 17.2, **Contractor** is required to list the **Subcontractor** in the web based Subcontractor Reporting System through the City's Payee Information Portal (PIP), available at www.nyc.gov/pip.[1]For each **Subcontractor** listed, **Contractor** is required to provide the following information: maximum contract value, description of **Subcontractor's** Work, start and end date of the subcontract and identification of the **Subcontractor**'s industry. Thereafter, **Contractor** will be required to report in the system the payments made to each **Subcontractor** within 30 days of making the

[1] In order to use the new system, a PIP account will be required. Detailed instructions on creating a PIP account and using the new system are also available at www.nyc.gov/pip. Additional assistance with PIP may be obtained by emailing the Financial Information Services Agency Help Desk at pip@fisa.nyc.gov.

payment. If any of the required information changes throughout the Term of the **Contract**, **Contractor** will be required to revise the information in the system.

Failure of the **Contractor** to list a **Subcontractor** and/or to report **Subcontractor** payments in a timely fashion may result in the **Commissioner** declaring the **Contractor** in default of the **Contract** and will subject **Contractor** to liquidated damages in the amount of $100 per day for each day that the **Contractor** fails to identify a **Subcontractor** along with the required information about the **Subcontractor** and/or fails to report payments to a **Subcontractor**, beyond the time frames set forth herein or in the notice from the **City**. Article 15 shall govern the issue of liquidated damages.

17.4 If an approved **Subcontractor** elects to subcontract any portion of its subcontract, the proposed sub-subcontract shall be submitted in the same manner as directed above.

17.5 The **Commissioner** will notify the **Contractor** in writing whether the proposed **Subcontractor** is approved. If the proposed **Subcontractor** is not approved, the **Contractor** may submit another proposed **Subcontractor** unless the **Contractor** decides to do the **Work**. No **Subcontractor** shall be permitted to enter or perform any work on the **Site** unless approved.

17.6 Before entering into any subcontract hereunder, the **Contractor** shall provide the proposed **Subcontractor** with a complete copy of this document and inform the proposed **Subcontractor** fully and completely of all provisions and requirements of this **Contract** relating either directly or indirectly to the **Work** to be performed and the materials to be furnished under such subcontract, and every such **Subcontractor** shall expressly stipulate that all labor performed and materials furnished by the **Subcontractor** shall strictly comply with the requirements of this **Contract.**

17.7 Documents given to a prospective **Subcontractor** for the purpose of soliciting the **Subcontractor's** bid shall include either a copy of the bid cover or a separate information sheet setting forth the **Project** name, the **Contract** number (if available), the **Agency** (as noted in Article 2.1.6), and the **Project's** location.

17.8 The **Commissioner's** approval of a **Subcontractor** shall not relieve the **Contractor** of any of its responsibilities, duties, and liabilities hereunder. The **Contractor** shall be solely responsible to the **City** for the acts or defaults of its **Subcontractor** and of such **Subcontractor's** officers, agents, and employees, each of whom shall, for this purpose, be deemed to be the agent or employee of the **Contractor** to the extent of its subcontract.

17.9 If the **Subcontractor** fails to maintain the necessary facilities, skill, integrity, past experience, and financial resources (other than due to the **Contractor's** failure to make payments where required) to perform the **Work** in accordance with the terms and conditions of this **Contract**, the **Contractor** shall promptly notify the **Commissioner** and replace such **Subcontractor** with a newly approved **Subcontractor** in accordance with this Article 17.

17.10 The **Contractor** shall be responsible for ensuring that all **Subcontractors** performing **Work** at the **Site** maintain all insurance required by **Law**.

17.11 The **Contractor** shall promptly, upon request, file with the **Engineer** a conformed copy ofthe subcontract and its cost. The subcontract shall provide the following:

17.11.1 Payment to **Subcontractors**: The agreement between the **Contractor** and its **Subcontractor** shall contain the same terms and conditions as to method of payment for **Work**, labor, and materials, and as to retained percentages, as are contained in this **Contract**.

17.11.2 Prevailing Rate of Wages: The agreement between the **Contractor** and its **Subcontractor** shall include the prevailing wage rates and supplemental benefits to be paid in accordance with Labor Law Section 220.

17.11.3 Section 6-123 of the Administrative Code: Pursuant to the requirements of Section 6-123 of the Administrative Code, every agreement between the **Contractor** and a **Subcontractor** in excess of fifty thousand ($50,000) dollars shall include a provision that the **Subcontractor** shall not engage in any unlawful discriminatory practice as defined in Title VIII of the Administrative Code (Section 8-101 *et seq*.).

17.11.4 All requirements required pursuant to federal and/or state grant agreement(s), if applicable to the **Work**.

17.12 The **Commissioner** may deduct from the amounts certified under this **Contract** to be due to the **Contractor**, the sum or sums due and owing from the **Contractor** to the **Subcontractors** according to the terms of the said subcontracts, and in case of dispute between the **Contractor** and its **Subcontractor**, or **Subcontractors**, as to the amount due and owing, the **Commissioner** may deduct and withhold from the amounts certified under this **Contract** to be due to the **Contractor** such sum or sums as may be claimed by such **Subcontractor**, or **Subcontractors**, in a sworn affidavit, to be due and owing until such time as such claim or claims shall have been finally resolved.

17.13 On contracts where performance bonds and payment bonds are executed, the **Contractor** shall include on each requisition for payment the following data: **Subcontractor's** name, value of the subcontract, total amount previously paid to **Subcontractor** for **Work** previously requisitioned, and the amount, including retainage, to be paid to the **Subcontractor** for **Work** included in the requisition.

17.14 On **Contracts** where performance bonds and payment bonds are not executed, the **Contractor** shall include with each requisition for payment submitted hereunder, a signed statement from each and every **Subcontractor** and/or **Materialman** for whom payment is requested in such requisition. Such signed statement shall be on the letterhead of the **Subcontractor** and/or **Materialman** for whom payment is requested and shall (i) verify that such **Subcontractor** and/or **Materialman** has been paid in full for all **Work** performed and/or material supplied to date, exclusive of any amount retained and any amount included on the current requisition, and (ii) state the total amount of retainage to date, exclusive of any amount retained on the current requisition.

ARTICLE 18. ASSIGNMENTS

18.1 The **Contractor** shall not assign, transfer, convey or otherwise dispose of this **Contract**, or the right to execute it, or the right, title or interest in or to it or any part thereof, or assign, by power of attorney or otherwise any of the monies due or to become due under this **Contract**, unless the previous written consent of the **Commissioner** shall first be obtained thereto, and the giving of any such consent to a particular assignment shall not dispense with the necessity of such consent to any further or other assignments.

18.2 Such assignment, transfer, conveyance or other disposition of this **Contract** shall not be valid until filed in the office of the **Commissioner** and the **Comptroller**, with the written consent of the **Commissioner** endorsed thereon or attached thereto.

18.3 Failure to obtain the previous written consent of the **Commissioner** to such an assignment,

transfer, conveyance or other disposition, may result in the revocation and annulment of this **Contract**. The **City** shall thereupon be relieved and discharged from any further liability to the **Contractor**, its assignees, transferees or sublessees, who shall forfeit and lose all monies therefor earned under the **Contract**, except so much as may be required to pay the **Contractor's** employees.

18.4 The provisions of this clause shall not hinder, prevent, or affect an assignment by the **Contractor** for the benefit of its creditors made pursuant to the **Laws** of the State of New York.

18.5 This **Contract** may be assigned by the **City** to any corporation, agency or instrumentality having authority to accept such assignment.

CHAPTER V: CONTRACTOR'S SECURITY AND GUARANTEE

ARTICLE 19. SECURITY DEPOSIT

19.1 If performance and payment bonds are required, the **City** shall retain the bid security to ensure that the successful bidder executes the **Contract** and furnishes the required payment and performance security within ten (10) **Days** after notice of the award of the **Contract**. If the successful bidder fails to execute the **Contract** and furnish the required payment and performance security, the **City** shall retain such bid security as set forth in the Information for Bidders. If the successful bidder executes the **Contract** and furnishes the required payment and performance security, the **City** shall return the bid security within a reasonable time after the furnishing of such bonds and execution of the **Contract** by the **City**.

19.2 If performance and payment bonds are not required, the bid security shall be retained by the **City** as security for the **Contractor**'s faithful performance of the **Contract**. If partial payments are provided, the bid security will be returned to the **Contractor** after the sum retained under Article 21 equals the amount of the bid security, subject to other provisions of this **Contract**. If partial payments are not provided, the bid security will be released when final payment is certified by the **City** for payment.

19.3 If the **Contractor** is declared in default under Article 48 prior to the return of the deposit, or if any claim is made such as referred to in Article 23, the amount of such deposit, or so much thereof as the **Comptroller** may deem necessary, may be retained and then applied by the **Comptroller**:

19.3.1 To compensate the **City** for any expense, loss or damage suffered or incurred by reason of or resulting from such default, including the cost of re-letting and liquidated damages; or

19.3.2 To indemnify the **City** against any and all claims.

ARTICLE 20. PAYMENT GUARANTEE

20.1 On **Contracts** where one hundred (100%) percent performance bonds and payment bonds are executed, this Article 20 does not apply.

20.2 In the event the terms of this **Contract** do not require the **Contractor** to provide a payment bond or where the **Contract** does not require a payment bond for one hundred (100%) percent of the **Contract** price, the **City** shall, in accordance with the terms of this Article 20, guarantee payment of all lawful claims for:

20.2.1 Wages and compensation for labor performed and/or services rendered; and

20.2.2 Materials, equipment, and supplies provided, whether incorporated into the **Work** or not, when demands have been filed with the **City** as provided hereinafter by any person, firm, or corporation which furnished labor, material, equipment, supplies, or any combination thereof, in connection with the **Work** performed hereunder (hereinafter referred to as the "beneficiary") at the direction of the **City** or the **Contractor**.

20.3 The provisions of Article 20.2 are subject to the following limitations and conditions:

20.3.1 If the **Contractor** provides a payment bond for a value that is less than one hundred (100%) percent of the value of the **Contract Work**, the payment bond provided by the **Contractor** shall be primary (and non-contributing) to the payment guarantee provided under this Article 20.

20.3.2 The guarantee is made for the benefit of all beneficiaries as defined in Article 20.2 provided that those beneficiaries strictly adhere to the terms and conditions of Article 20.3.4 and 20.3.5.

20.3.3 Nothing in this Article 20 shall prevent a beneficiary providing labor, services or material for the **Work** from suing the **Contractor** for any amounts due and owing the beneficiary by the **Contractor**.

20.3.4 Every person who has furnished labor or material, to the **Contractor** or to a **Subcontractor** of the **Contractor**, in the prosecution of the **Work** and who has not been paid in full therefor before the expiration of a period of ninety (90) **Days** after the date on which the last of the labor was performed or material was furnished by him/her for which the claim is made, shall have the right to sue on this payment guarantee in his/her own name for the amount, or the balance thereof, unpaid at the time of commencement of the action; provided, however, that a person having a direct contractual relationship with a **Subcontractor** of the **Contractor** but no contractual relationship express or implied with the **Contractor** shall not have a right of action upon the guarantee unless he/she shall have given written notice to the **Contractor** within one hundred twenty (120) **Days** from the date on which the last of the labor was performed or the last of the material was furnished, for which his/her claim is made, stating with substantial accuracy the amount claimed and the name of the party to whom the material was furnished or for whom the labor was performed. The notice shall be served by delivering the same personally to the **Contractor** or by mailing the same by registered mail, postage prepaid, in an envelope addressed to the **Contractor** at any place where it maintains an office or conducts its business; provided, however, that where such notice is actually received by the **Contractor** by other means, such notice shall be deemed sufficient.

20.3.5 Except as provided in Labor Law Section 220-g, no action on this payment guarantee shall be commenced after the expiration of the one-year limitations period set forth in Section 137(4)(b) of the State Finance Law.

20.3.6 The **Contractor** shall promptly forward to the **City** any notice or demand received pursuant to Article 20.3.4. The **Contractor** shall inform the **City** of any defenses to the notice or demand and shall forward to the **City** any documents the **City** requests concerning the notice or demand.

20.3.7 All demands made against the **City** by a beneficiary of this payment guarantee shall be presented to the **Engineer** along with all written documentation concerning the demand which the **Engineer** deems reasonably appropriate or necessary, which may include, but shall not be

limited to: the subcontract; any invoices presented to the **Contractor** for payment; the notarized statement of the beneficiary that the demand is due and payable, that a request for payment has been made of the **Contractor** and that the demand has not been paid by the **Contractor** within the time allowed for such payment by the subcontract; and copies of any correspondence between the beneficiary and the **Contractor** concerning such demand. The **City** shall notify the **Contractor** that a demand has been made. The **Contractor** shall inform the **City** of any defenses to the demand and shall forward to the **City** any documents the **City** requests concerning the demand.

20.3.8 The **City** shall make payment only if, after considering all defenses presented by the **Contractor**, it determines that the payment is due and owing to the beneficiary making the demand.

20.3.9 No beneficiary shall be entitled to interest from the **City**, or to any other costs, including, but not limited to, attorneys' fees, except to the extent required by State Finance Law Section 137.

20.3.10

20.4 Upon the receipt by the **City** of a demand pursuant to this Article 20, the **City** may withhold from any payment otherwise due and owing to the **Contractor** under this **Contract** an amount sufficient to satisfy the demand.

20.4.1 In the event the **City** determines that the demand is valid, the **City** shall notify the **Contractor** of such determination and the amount thereof and direct the **Contractor** to immediately pay such amount to the beneficiary. In the event the **Contractor**, within seven (7) **Days** of receipt of such notification from the **City**, fails to pay the beneficiary, such failure shall constitute an automatic and irrevocable assignment of payment by the **Contractor** to the beneficiary for the amount of the demand determined by the **City** to be valid. The **Contractor**, without further notification or other process, hereby gives its unconditional consent to such assignment of payment to the beneficiary and authorizes the **City**, on its behalf, to take all necessary actions to implement such assignment of payment, including without limitation the execution of any instrument or documentation necessary to effectuate such assignment.

20.4.2 In the event that the amount otherwise due and owing to the **Contractor** by the **City** is insufficient to satisfy such demand, the **City** may, at its option, require payment from the **Contractor** of an amount sufficient to cover such demand and exercise any other right to require or recover payment which the **City** may have under **Law** or **Contract**.

20.4.3 In the event the **City** determines that the demand is invalid, any amount withheld pending the **City**'s review of such demand shall be paid to the **Contractor**; provided, however, no lien has been filed. In the event a claim or an action has been filed, the terms and conditions set forth in Article 23 shall apply. In the event a lien has been filed, the parties will be governed by the provisions of the Lien Law of the State of New York.

20.5 The provisions of this Article 20 shall not prevent the **City** and the **Contractor** from resolving disputes in accordance with the **PPB** Rules, where applicable.

20.6 In the event the **City** determines that the beneficiary is entitled to payment pursuant to this Article 20, such determination and any defenses and counterclaims raised by the **Contractor** shall be taken into account in evaluating the **Contractor's** performance.

20.7 Nothing in this Article 20 shall relieve the **Contractor** of the obligation to pay the claims of all

persons with valid and lawful claims against the **Contractor** relating to the **Work**.

20.8 The **Contractor** shall not require any performance, payment or other bonds of any **Subcontractor** if this **Contract** does not require such bonds of the **Contractor**.

20.9 The payment guarantee made pursuant to this Article 20 shall be construed in a manner consistent with Section 137 of the State Finance Law and shall afford to persons furnishing labor or materials to the **Contractor** or its **Subcontractors** in the prosecution of the **Work** under this **Contract** all of the rights and remedies afforded to such persons by such section, including but not limited to, the right to commence an action against the **City** on the payment guarantee provided by this Article 20 within the one-year limitations period set forth in Section 137(4)(b).

ARTICLE 21. RETAINED PERCENTAGE

21.1 If this **Contract** requires one hundred (100%) percent performance and payment security, then as further security for the faithful performance of this **Contract**, the **Commissioner** shall deduct, and retain until the substantial completion of the **Work**, five (5%) percent of the value of **Work** certified for payment in each partial payment voucher.

21.2 If this **Contract** does not require one hundred (100%) percent performance and payment security and if the price for which this **Contract** was awarded does not exceed one million ($1,000,000) dollars, then as further security for the faithful performance of this **Contract**, the **Commissioner** shall deduct, and retain until the substantial completion of the **Work**, five (5%) percent of the value of **Work** certified for payment in each partial payment voucher.

21.3 If this **Contract** does not require one hundred (100%) percent performance and payment security and if the price for which this **Contract** was awarded exceeds one million ($1,000,000) dollars, then as further security for the faithful performance of this **Contract,** the **Commissioner** shall deduct, and retain until the substantial completion of the **Work**, up to ten (10%) percent of the value of **Work** certified for payment in each partial payment voucher. The percentage to be retained is set forth in Schedule A of the General Conditions.

ARTICLE 22. INSURANCE

22.1 Types of Insurance: The **Contractor** shall procure and maintain the following types of insurance if, and as indicated, in Schedule A of the General Conditions (with the minimum limits and special conditions specified in Schedule A). Such insurance shall be maintained from the date the **Contractor** is required to provide Proof of Insurance pursuant to Article 22.3.1 through the date of completion of all required **Work** (including punch list work as certified in writing by the **Resident Engineer**), except for insurance required pursuant to Article 22.1.4, which may terminate upon **Substantial Completion** of the **Contract**. All insurance shall meet the requirements set forth in this Article 22. Wherever this Article requires that insurance coverage be "at least as broad" as a specified form (including all ISO forms), there is no obligation that the form itself be used, provided that the **Contractor** can demonstrate that the alternative form or endorsement contained in its policy provides coverage at least as broad as the specified form.

22.1.1 Commercial General Liability Insurance: The **Contractor** shall provide Commercial General Liability Insurance covering claims for property damage and/or bodily injury, including death, which may arise from any of the operations under this **Contract**. Coverage under this insurance shall be at least as broad as that provided by the latest edition of Insurance

Services Office ("ISO") Form CG 0001. Such insurance shall be "occurrence" based rather than "claims-made" and include, without limitation, the following types of coverage: premises operations; products and completed operations; contractual liability (including the tort liability of another assumed in a contract); broad form property damage; independent contractors; explosion, collapse and underground (XCU); construction means and methods; and incidental malpractice. Such insurance shall contain a "per project" aggregate limit, as specified in Schedule A, that applies separately to operations under this **Contract**.

22.1.1(a) Such Commercial General Liability Insurance shall name the **City** as an Additional Insured. Coverage for the City shall specifically include the **City's** officials and employees, be at least as broad as the latest edition of ISO Form CG 20 10 and provide completed operations coverage at least as broad as the latest edition of ISO Form CG 20 37.

22.1.1(b) Such Commercial General Liability Insurance shall name all other entities designated as additional insureds in Schedule A but only for claims arising from the **Contractor's** operations under this **Contract**, with coverage at least as broad as the latest edition of ISO Form CG 20 26.

22.1.1(c) If the **Work** requires a permit from the Department of Buildings pursuant to 1 RCNY Section 101-08, the **Contractor** shall provide Commercial General Liability Insurance with limits of at least those required by 1 RCNY section 101-08 or greater limits required by the Agency in accordance with Schedule A. If the **Work** does not require such a permit, the minimum limits shall be those provided for in Schedule A.

22.1.1(d) If any of the **Work** includes repair of a waterborne vessel owned by or to be delivered to the **City**, such Commercial General Liability shall include, or be endorsed to include, Ship Repairer's Legal Liability Coverage to protect against, without limitation, liability arising from navigation of such vessels prior to delivery to and acceptance by the **City**.

22.1.2 Workers' Compensation Insurance, Employers' Liability Insurance, and Disability Benefits Insurance: The **Contractor** shall provide, and shall cause its **Subcontractors** to provide, Workers Compensation Insurance, Employers' Liability Insurance, and Disability Benefits Insurance in accordance with the **Laws** of the State of New York on behalf of all employees providing services under this **Contract** (except for those employees, if any, for which the **Laws** require insurance only pursuant to Article 22.1.3).

22.1.3 United States Longshoremen's and Harbor Workers Act and/or Jones Act Insurance: If specified in Schedule A of the General Conditions or if required by **Law**, the **Contractor** shall provide insurance in accordance with the United States Longshoremen's and Harbor Workers Act and/or the Jones Act, on behalf of all qualifying employees providing services under this **Contract**.

22.1.4 Builders Risk Insurance: If specified in Schedule A of the General Conditions, the **Contractor** shall provide Builders Risk Insurance on a completed value form for the total value of the **Work** through **Substantial Completion** of the **Work** in its entirety. Such insurance shall be provided on an All Risk basis and include coverage, without limitation, for windstorm (including named windstorm), storm surge, flood and earth movement. Unless waived by the **Commissioner**, it shall include coverage for ordinance and law, demolition and increased costs of construction, debris removal, pollutant clean up and removal, and expediting costs. Such insurance shall cover, without limitation, (a) all buildings and/or structures involved in the

Work, as well as temporary structures at the **Site**, and (b) any property that is intended to become a permanent part of such building or structure, whether such property is on the **Site**, in transit or in temporary storage. Policies shall name the **Contractor** as Named Insured and list the **City** as both an Additional Insuredand a Loss Payee as its interest may appear.

22.1.4(a) Policies of such insurance shall specify that, in the event a loss occurs at an occupied facility, occupancy of such facility is permitted without the consent of the issuing insurance company.

22.1.4(b) Such insurance may be provided through an Installation Floater, at the **Contractor's** option, if it otherwise conforms with the requirements of this Article 22.1.4.

22.1.5 Commercial Automobile Liability Insurance: The **Contractor** shall provide Commercial Automobile Liability Insurance for liability arising out of ownership, maintenance or use of any owned (if any), non-owned and hired vehicles to be used in connection with this **Contract**. Coverage shall be at least as broad as the latest edition of ISO Form CA0001. If vehicles are used for transporting hazardous materials, the Automobile Liability Insurance shall be endorsed to provide pollution liability broadened coverage for covered vehicles (endorsement CA 99 48) as well as proof of MCS 90.

22.1.6 Contractors Pollution Liability Insurance: If specified in Schedule A of the General Conditions, the **Contractor** shall maintain, or cause the **Subcontractor** doing such **Work**to maintain, Contractors Pollution Liability Insurance covering bodily injury and property damage. Such insurance shall provide coverage for actual, alleged or threatened emission, discharge, dispersal, seepage, release or escape of pollutants (including asbestos), including any loss, cost or expense incurred as a result of any cleanup of pollutants (including asbestos) or in the investigation, settlement or defense of any claim, action, or proceedings arising from the operations under this **Contract**. Such insurance shall be in the **Contractor's** name and list the **City** as an Additional Insured and any other entity specified in Schedule A. Coverage shall include, without limitation, (a) loss of use of damaged property or of property that has not been physically injured, (b) transportation, and (c) non- owned disposal sites.

22.1.6(a) Coverage for the **City** as Additional Insured shall specifically include the **City's** officials and employees and be at least as broad as provided to the **Contractor** for this **Project**.

22.1.6(b) If such insurance is written on a claims-made policy, such policy shall have a retroactive date on or before the effective date of this **Contract**, and continuous coverage shall be maintained, or an extended discovery period exercised, for a period of not less than three (3) years from the time the **Work** under this **Contract** is completed.

22.1.7 Marine Insurance:

22.1.7(a) Marine Protection and Indemnity Insurance: If specified in Schedule A of the General Conditions or if the **Contractor** engages in marine operations in the execution of any part of the **Work**, the **Contractor** shall maintain, or cause the**Subcontractor** doing such Work to maintain, Marine Protection and Indemnity Insurance with coverage at least as broad as Form SP-23. The insurance shall provide coverage for the **Contractor** or **Subcontractor** (whichever is doing this **Work**) and for the **City** (together with its officials and employees) and any other entity specified in Schedule A as an Additional Insured for bodily injury and property damage arising from marine operations under this

Contract. Coverage shall include, without limitation, injury or death of crew members (if not fully provided through other insurance), removal of wreck, damage to piers, wharves and other fixed or floating objects and loss of or damage to any other vessel or craft, or to property on such other vessel or craft.

22.1.7(b) Hull and Machinery Insurance: If specified in Schedule A of the General Conditions or if the **Contractor** engages in marine operations in the execution of any part of the **Work**, the **Contractor** shall maintain, or cause the **Subcontractor** doing such **Work** to maintain, Hull and Machinery Insurance with coverage for the **Contractor** or **Subcontractor** (whichever is doing this Work) and for the **City** (together with its officials and employees) as Additional Insured at least as broad as the latest edition of American Institute Tug Form for all tugs used under this **Contract** and Collision Liability at least as broad as the latest edition of American Institute Hull Clauses.

22.1.7(c) Marine Pollution Liability Insurance: If specified in Schedule A of the General Conditions or if the **Contractor** engages in marine operations in the execution of any part of the **Work**, the **Contractor** shall maintain, or cause the **Subcontractor** doing such Work to maintain, Marine Pollution Liability Insurance covering itself (or the Subcontractor doing such Work) as Named Insured and the **City** (together with its officials and employees) and any other entity specified in Schedule A as an Additional Insured. Coverage shall be at least as broad as that provided by the latest edition of Water Quality Insurance Syndicate Form and include, without limitation, liability arising from the discharge or substantial threat of a discharge of oil, or from the release or threatened release of a hazardous substance including injury to, or economic losses resulting from, the destruction of or damage to real property, personal property or natural resources.

22.1.8 The **Contractor** shall provide such other types of insurance, at such minimum limits and with such conditions, as are specified in Schedule A of the General Conditions.

22.2 General Requirements for Insurance Coverage and Policies:

22.2.1 All required insurance policies shall be maintained with companies that may lawfully issue the required policy and have an A.M. Best rating of at least A-/VII or a Standard and Poor's rating of at least A, unless prior written approval is obtained from the **City** Corporation Counsel.

22.2.2 The **Contractor** shall be solely responsible for the payment of all premiums for all required policies and all deductibles and self-insured retentions to which such policies are subject, whether or not the **City** is an insured under the policy.

22.2.3 In his/her sole discretion, the **Commissioner** may, subject to the approval of the **Comptroller** and the **City** Corporation Counsel, accept Letters of Credit and/or custodial accounts in lieu of required insurance.

22.2.4 The **City's** limits of coverage for all types of insurance required pursuant to Schedule A of the General Conditions shall be the greater of (i) the minimum limits set forth in Schedule A or (ii) the limits provided to the **Contractor** as Named Insured under all primary, excess, and umbrella policies of that type of coverage.

22.2.5 The **Contractor** may satisfy its insurance obligations under this Article 22 through primary policies or a combination of primary and excess/umbrella policies, so long as all policies provide the scope of coverage required herein.

22.2.6 Policies of insurance provided pursuant to this Article 22 shall be primary and non-contributing to any insurance or self-insurance maintained by the **City**.

22.3 Proof of Insurance:

22.3.1 For all types of insurance required by Article 22.1 and Schedule A, except for insurance required by Articles 22.1.4 and 22.1.7, the **Contractor** shall file proof of insurance in accordance with this Article 22.3 within ten (10) **Days** of award. For insurance provided pursuant to Articles 22.1.4 and 22.1.7, proof shall be filed by a date specified by the **Commissioner** or ten (10) **Days** prior to the commencement of the portion of the **Work** covered by such policy, whichever is earlier.

22.3.2 For Workers' Compensation Insurance provided pursuant to Article 22.1.2, the **Contractor** shall submit one of the following forms: C-105.2 Certificate of Workers' Compensation Insurance; U-26.3 - State Insurance Fund Certificate of Workers' Compensation Insurance; Request for WC/DB Exemption (Form CE-200); equivalent or successor forms used by the New York State Workers' Compensation Board; or other proof of insurance in a form acceptable to the **Commissioner**. For Disability Benefits Insurance provided pursuant to Article 22.1.2, the Contractor shall submit DB-120.1 - Certificate Of Insurance Coverage Under The NYS Disability Benefits Law, Request for WC/DB Exemption (Form CE-200); equivalent or successor forms used by the New York State Workers' Compensation Board; or other proof of insurance in a form acceptable to the **Commissioner**. ACORD forms are not acceptable.

22.3.3 For policies provided pursuant to all of Article 22.1 other than Article 22.1.2, the **Contractor** shall submit one or more Certificates of Insurance on forms acceptable to the **Commissioner**. All such Certificates of Insurance shall certify (a) the issuance and effectiveness of such policies of insurance, each with the specified minimum limits (b) for insurance secured pursuant to Article 22.1.1 that the **City** and any other entity specified in Schedule A is an Additional Insured thereunder; (c) in the event insurance is required pursuant to Article 22.1.6 and/or Article 22.1.7, that the City is an Additional Insured thereunder; (d) the company code issued to the insurance company by the National Association of Insurance Commissioners (the NAIC number); and (e) the number assigned to the **Contract** by the **City**. All such Certificates of Insurance shall be accompanied by either a duly executed "Certification by Insurance Broker or Agent" in the form contained in Part III of Schedule A or copies of all policies referenced in such Certificate of Insurance as certified by an authorized representative of the issuing insurance carrier. If any policy is not available at the time of submission, certified binders may be submitted until such time as the policy is available, at which time a certified copy of the policy shall be submitted.

22.3.4 Documentation confirming renewals of insurance shall be submitted to the **Commissioner** prior to the expiration date of coverage of policies required under this **Contract**. Such proofs of insurance shall comply with the requirements of Articles 22.3.2 and 22.3.3.

22.3.5 The **Contractor** shall be obligated to provide the **City** with a copy of any policy of insurance provided pursuant to this Article 22 upon the demand for such policy by the **Commissioner** or the **City** Corporation Counsel.

22.4 Operations of the **Contractor**:

22.4.1 The **Contractor** shall not commence the **Work** unless and until all required certificates have been submitted to and accepted by the **Commissioner**. Acceptance by the

Commissioner of a certificate does not excuse the **Contractor** from securing insurance consistent with all provisions of this Article 22 or of any liability arising from its failure todo so.

22.4.2 The **Contractor** shall be responsible for providing continuous insurance coverage in the manner, form, and limits required by this **Contract** and shall be authorized to perform **Work** only during the effective period of all required coverage.

22.4.3 In the event that any of the required insurance policies lapse, are revoked, suspended or otherwise terminated, for whatever cause, the **Contractor** shall immediately stop all **Work**, and shall not recommence **Work** until authorized in writing to do so by the **Commissioner**. Upon quitting the **Site**, except as otherwise directed by the **Commissioner**, the **Contractor** shall leave all plant, materials, equipment, tools, and supplies on the **Site**. **Contract** time shall continue to run during such periods and no extensions of time will be granted. The **Commissioner** may also declare the **Contractor** in default for failure to maintain required insurance.

22.4.4 In the event the **Contractor** receives notice, from an insurance company or other person, that any insurance policy required under this Article 22 shall be cancelled or terminated (or has been cancelled or terminated) for any reason, the **Contractor** shall immediately forward a copy of such notice to both the **Commissioner** and the New York City Comptroller, attn: Office of Contract Administration, Municipal Building, One Centre Street, room 1005, New York, New York 10007. Notwithstanding the foregoing, the**Contractor** shall ensure that there is no interruption in any of the insurance coverage required under this Article 22.

22.4.5 Where notice of loss, damage, occurrence, accident, claim or suit is required under an insurance policy maintained in accordance with this Article 22, the **Contractor** shall notify in writing all insurance carriers that issued potentially responsive policies of any such event relating to any operations under this **Contract** (including notice to Commercial General Liability insurance carriers for events relating to the **Contractor**'s own employees) no later than 20 days after such event. For any policy where the **City** is an Additional Insured, such notice shall expressly specify that "this notice is being given on behalf of the City of New York as Insured as well as the Named Insured." Such notice shall also contain the following information: the number of the insurance policy, the name of the named insured, the date and location of the damage, occurrence, or accident, and the identity of the persons or things injured, damaged or lost. The **Contractor** shall simultaneously send a copy of such notice to the City of New York c/o Insurance Claims Specialist, Affirmative Litigation Division, New York City Law Department, 100 Church Street, New York, New York 10007.

22.4.6 In the event of any loss, accident, claim, action, or other event that does or can give rise to a claim under any insurance policy required under this Article 22, the **Contractor** shall at all times fully cooperate with the **City** with regard to such potential or actual claim.

22.5 **Subcontractor** Insurance: In the event the **Contractor** requires any **Subcontractor** to procure insurance with regard to any operations under this **Contract** and requires such **Subcontractor** to name the **Contractor** as an **Additional Insured** thereunder, the **Contractor** shall ensure that the **Subcontractor** name the **City**, including its officials and employees, as an Additional Insured with coverage at least as broad as the most recent edition of ISO Form CG 20 26.

22.6 Wherever reference is made in Article 7 or this Article 22 to documents to be sent to the **Commissioner** (e.g., notices, filings, or submissions), such documents shall be sent to the address set forth in Schedule A of the General Conditions. In the event no address is set forth in Schedule A, such documents

are to be sent to the **Commissioner's** address as provided elsewhere in this **Contract**.

22.7 Apart from damages or losses covered by insurance provided pursuant to Articles 22.1.2, 22.1.3, or 22.1.5, the **Contractor** waives all rights against the **City**, including its officials and employees, for any damages or losses that are covered under any insurance required under this Article 22 (whether or not such insurance is actually procured or claims are paid thereunder) or any other insurance applicableto the operations of the **Contractor** and/or its employees, agents, or **Subcontractors**.

22.8 In the event the **Contractor** utilizes a self-insurance program to satisfy any of the requirements of this Article 22, the **Contractor** shall ensure that any such self-insurance program provides the **City** with all rights that would be provided by traditional insurance under this Article 22, including but not limited to the defense and indemnification obligations that insurers are required to undertake in liability policies.

22.9 Materiality/Non-Waiver: The **Contractor's** failure to secure policies in complete conformity with this Article 22, or to give an insurance company timely notice of any sort required in this **Contract** or to do anything else required by this Article 22 shall constitute a material breach of this **Contract**. Such breach shall not be waived or otherwise excused by any action or inaction by the **City** at any time.

22.10 Pursuant to General Municipal Law Section 108, this **Contract** shall be void and of no effect unless **Contractor** maintains Workers' Compensation Insurance for the term of this **Contract** tothe extent required and in compliance with the New York State Workers' Compensation Law.

22.11 Other Remedies: Insurance coverage provided pursuant to this Article 22 or otherwise shall not relieve the **Contractor** of any liability under this **Contract**, nor shall it preclude the **City** from exercising any rights or taking such other actions available to it under any other provisions of this **Contract** or **Law**.

ARTICLE 23. MONEY RETAINED AGAINST CLAIMS

23.1 If any claim shall be made by any person or entity (including **Other Contractors** with the **City** on this **Project**) against the **City** or against the **Contractor** and the **City** for any of the following:

(a) An alleged loss, damage, injury, theft or vandalism of any of the kinds referred to in Articles 7 and 12, plus the reasonable costs of defending the **City**, which in the opinion of the **Comptroller** may not be paid by an insurance company (for any reason whatsoever);or

(b) An infringement of copyrights, patents or use of patented articles, tools, etc., asreferred to in Article 57; or

(c) Damage claimed to have been caused directly or indirectly by the failure of the **Contractor** to perform the **Work** in strict accordance with this **Contract,**

the amount of such claim, or so much thereof as the **Comptroller** may deem necessary, may be withheld by the **Comptroller**, as security against such claim, from any money due hereunder. The **Comptroller**, in his/her discretion, may permit the **Contractor** to substitute other satisfactory security in lieu of the monies so withheld.

23.2 If an action on such claim is timely commenced and the liability of the **City**, or the **Contractor**,

or both, shall have been established therein by a final judgment of a court of competent jurisdiction, or if such claim shall have been admitted by the **Contractor** to be valid, the **Comptroller** shall pay such judgment or admitted claim out of the monies retained by the **Comptroller** under the provisions of this Article 23, and return the balance, if any, without interest, to the **Contractor**.

ARTICLE 24. MAINTENANCE AND GUARANTY

24.1 The **Contractor** shall promptly repair, replace, restore or rebuild, as the **Commissioner** may determine, any finished **Work** in which defects of materials or workmanship may appear or to which damage may occur because of such defects, during the one (1) year period subsequent to the date of **Substantial Completion** (or use and occupancy in accordance with Article 16), except where other periods of maintenance and guaranty are provided for in Schedule A.

24.2 As security for the faithful performance of its obligations hereunder, the **Contractor**, upon filing its requisition for payment on **Substantial Completion**, shall deposit with the **Commissioner** a sum equal to one (1%) percent of the price (or the amount fixed in Schedule A of the General Conditions) in cash or certified check upon a state or national bank and trust company or a check of such bank and trust company signed by a duly authorized officer thereof and drawn to the order of the **Comptroller**, or obligations of the **City**, which the **Comptroller** may approve as of equal value with the sum so required.

24.3 In lieu of the above, the **Contractor** may make such security payment to the **City** byauthorizing the **Commissioner** in writing to deduct the amount from the **Substantial Completion** payment which shall be deemed the deposit required above.

24.4 If the **Contractor** has faithfully performed all of its obligations hereunder the **Commissioner** shall so certify to the **Comptroller** within five (5) **Days** after the expiration of one (1) year from the date of **Substantial Completion** and acceptance of the **Work** or within thirty (30) **Days** after the expirationof the guarantee period fixed in the **Specifications**. The security payment shall be repaid to the **Contractor** without interest within thirty (30) **Days** after certification by the **Commissioner** to the **Comptroller** that the **Contractor** has faithfully performed all of its obligations hereunder.

24.5 Notice by the **Commissioner** to the **Contractor** to repair, replace, rebuild or restore such defective or damaged **Work** shall be timely, pursuant to this article, if given not later than ten (10) **Days** subsequent to the expiration of the one (1) year period or other periods provided for herein.

24.6 If the **Contractor** shall fail to repair, replace, rebuild or restore such defective or damaged **Work** promptly after receiving such notice, the **Commissioner** shall have the right to have the **Work** done by others in the same manner as provided for in the completion of a defaulted **Contract**, under Article 51.

24.7 If the security payment so deposited is insufficient to cover the cost of such **Work**, the **Contractor** shall be liable to pay such deficiency on demand by the **Commissioner**.

24.8 The **Engineer's** certificate setting forth the fair and reasonable cost of repairing, replacing, rebuilding or restoring any damaged or defective **Work** when performed by one other than the **Contractor**, shall be binding and conclusive upon the **Contractor** as to the amount thereof.

24.9 The **Contractor** shall obtain all manufacturers' warranties and guaranties of all equipment and materials required by this **Contract** in the name of the **City** and shall deliver same to the **Commissioner**. All of the **City's** rights and title and interest in and to said manufacturers' warranties and guaranties may be assigned by the **City** to any subsequent purchasers of such equipment and materials or lessees of the

premises into which the equipment and materials have been installed.

CHAPTER VI: CHANGES, EXTRA WORK, AND DOCUMENTATION OF CLAIM

ARTICLE 25. CHANGES

25.1 Changes may be made to this **Contract** only as duly authorized in writing by the **Commissioner** in accordance with the **Law** and this **Contract**. All such changes, modifications, and amendments will become a part of the **Contract**. **Work** so ordered shall be performed by the **Contractor**.

25.2 **Contract** changes will be made only for **Work** necessary to complete the **Work** included inthe original scope of the **Contract** and/or for non-material changes to the scope of the **Contract**.Changes are not permitted for any material alteration in the scope of **Work** in the **Contract**.

25.3 The **Contractor** shall be entitled to a price adjustment for **Extra Work** performed pursuant toa written change order. Adjustments to price shall be computed in one or more of the following ways:

25.3.1 By applicable unit prices specified in the **Contract**; and/or

25.3.2 By agreement of a fixed price; and/or

25.3.3 By time and material records; and/or

25.3.4 In any other manner approved by the **CCPO**.

25.4 All payments for change orders are subject to pre-audit by the **Engineering Audit Officer** and may be post-audited by the **Comptroller** and/or the **Agency**.

ARTICLE 26. METHODS OF PAYMENT FOR OVERRUNS AND EXTRA WORK

26.1 Overrun of Unit Price Item: An overrun is any quantity of a unit price item which the **Contractor** is directed to provide which is in excess of one hundred twenty-five (125%) percent of the estimated quantity for that item set forth in the bid schedule.

26.1.1 For any unit price item, the **Contractor** will be paid at the unit price bid for any quantity up to one hundred twenty-five (125%) percent of the estimated quantity for that item set forth in the bid schedule. If during the progress of the **Work**, the actual quantity of any unit price item required to complete the **Work** approaches the estimated quantity forthat item, and for any reason it appears that the actual quantity of any unit price item necessary to complete the **Work** will exceed the estimated quantity for that item by twenty- five (25%) percent, the **Contractor** shall immediately notify the **Engineer** of such anticipated overrun. The **Contractor** shall not be compensated for any quantity of a unit price item provided which is in excess of one hundred twenty-five (125%) percent of the estimated quantity for that item set forth in the bid schedule without written authorization from the **Engineer**.

26.1.2 If the actual quantity of any unit price item necessary to complete the **Work** will exceed one hundred twenty five (125%) percent of the estimated quantity for that item set forth in the bid schedule, the **City** reserves the right and the **Contractor** agrees to negotiate a new unit price for such item. In no event shall such negotiated new unit price exceed the unit bid price. If the **City** and **Contractor** cannot agree on a new unit price, then the **City** shall order the **Contractor** and the **Contractor** agrees to provide additional quantities of the item on the

basis of time and material records for the actual and reasonable cost as determined under Article 26.2, but in no event at a unit price exceeding the unit price bid.

26.2 **Extra Work:** For **Extra Work** where payment is by agreement on a fixed price in accordance with Article 25.3.2, the price to be paid for such **Extra Work** shall be based on the fair and reasonable estimated cost of the items set forth below. For **Extra Work** where payment is based on time and material records in accordance with Article 25.3.3, the price to be paid for such **Extra Work** shall be the actual and reasonable cost of the items set forth below, calculated in accordance with the formula specified therein, if any.

26.2.1 Necessary materials (including transportation to the **Site**); plus

26.2.2 Necessary direct labor, including payroll taxes (subject to statutory wage caps) and supplemental benefits; plus

26.2.3 Sales and personal property taxes, if any, required to be paid on materials not incorporated into such **Extra Work**; plus

26.2.4 Reasonable rental value of **Contractor**-owned (or **Subcontractor**-owned, as applicable), necessary plant and equipment other than **Small Tools**, plus fuel/energy costs. Except for fuel costs for pick-up trucks which shall be reimbursed based on a consumption of five (5) gallons per shift, fuel costs shall be reimbursed based on actual costs or, in the absence of auditable documentation, the following fuel consumption formula per operating hour: (.035) x (HP rating) x (Fuel cost/gallon). Reasonable rental value is defined as the lower of either seventy-five percent of the monthly prorated rental rates established in "The AED Green Book, Rental Rates and Specifications for Construction Equipment" published by Equipment Watch (the "Green Book"), or seventy-five percent of the monthly prorated rental rates established in the "Rental Rate Blue Book for Construction Equipment" published by Equipment Watch (the "Blue Book") (the applicable Blue Book rate being for rental only without the addition of any operational costs listed in the Blue Book). The reasonable rental value is deemed to be inclusive of all operating costs except for fuel/energy consumption and equipment operator's wages/costs. For multiple shift utilization, reimbursement shall be calculated as follows: first shift shall be seventy-five (75%) percent of such rental rates; second shift shall be sixty (60%) percent of the first shift rate; and third shift shall be forty (40%) percent of the first shift rate. Equipment on standby shall be reimbursed at one-third (1/3) the prorated monthly rental rate. **Contractor**-owned (or **Subcontractor**-owned, as applicable) equipment includes equipment from rental companies affiliated with or controlled by the **Contractor** (or **Subcontractor**, as applicable)**,** as determined by the **Commissioner**. In establishing cost reimbursement for non-operating **Contractor**-owned (or **Subcontractor**-owned, as applicable) equipment (scaffolding, sheeting systems, road plates, etc.), the **City** may restrict reimbursement to a purchase-salvage/life cycle basis if less than the computed rental costs; plus

26.2.5 Necessary installation and dismantling of such plant and equipment, including transportation to and from the **Site**, if any, provided that, in the case of non-**Contractor**-owned (or non-**Subcontractor**-owned, as applicable) equipment rented from a third party, the cost of installation and dismantling are not allowable if such costs are included in the rental rate; plus

26.2.6 Necessary fees charged by governmental entities; plus

26.2.7 Necessary construction-related service fees charged by non-governmental entities, such as landfill tipping fees; plus

26.2.8 Reasonable rental costs of non-**Contractor**-owned (or non-**Subcontractor**-owned, as applicable) necessary plant and equipment other than **Small Tools**, plus fuel/energy costs. Except for fuel costs for pick-up trucks which shall be reimbursed based on a consumption of five (5) gallons per shift, fuel costs shall be reimbursed based on actual costs or, in the absence of auditable documentation, the following fuel consumption formula per hour of operation: (.035) x (HP rating) x (Fuel cost/gallon). In lieu of renting, the **City** reserves the right to direct the purchase of non-operating equipment (scaffolding, sheeting systems, road plates, etc.), with payment on a purchase-salvage/life cycle basis, if less than the projected rental costs; plus

26.2.9 Workers' Compensation Insurance, and any insurance coverage expressly required by the **City** for the performance of the **Extra Work** which is different than the types of insurance required by Article 22 and Schedule A of the General Conditions. The cost of Workers' Compensation Insurance is subject to applicable payroll limitation caps and shall be based upon the carrier's Manual Rate for such insurance derived from the applicable class Loss Cost ("LC") and carrier's Lost Cost Multiplier ("LCM") approved by the New York State Department of Financial Services, and with the exception of experience rating, rate modifiers as promulgated by the New York Compensation Insurance Rating Board ("NYCIRB"); plus

26.2.10 Additional costs incurred as a result of the **Extra Work** for performance and payment bonds; plus

26.2.11 Twelve percent (12%) percent of the total of items in Articles 26.2.1 through 26.2.5 as compensation for overhead, except that no percentage for overhead will be allowed on **Payroll Taxes** or on the premium portion of overtime pay or on sales and personal property taxes. Overhead shall include without limitation, all costs and expenses in connection with administration, management superintendence, small tools, and insurance required by Schedule A of the General Conditions other than Workers' Compensation Insurance; plus

26.2.12 Ten (10%) percent of the total of items in Articles 26.2.1 through 26.2.5, plus the items in Article 26.2.11, as compensation for profit, except that no percentage for profit will be allowed on **Payroll Taxes** or on the premium portion of overtime pay or on sales and personal property taxes; plus

26.2.13 Five (5%) percent of the total of items in Articles 26.2.6 through 26.2.10 as compensation for overhead and profit.

26.3 Where the **Extra Work** is performed in whole or in part by other than the **Contractor's** own forces pursuant to Article 26.2, the **Contractor** shall be paid, subject to pre-audit by the **Engineering Audit Officer**, the cost of such **Work** computed in accordance with Article 26.2 above, plus an additional allowance of five (5%) percent to cover the **Contractor's** overhead and profit.

26.4 Where a change is ordered, involving both **Extra Work** and omitted or reduced **Contract Work,** the **Contract** price shall be adjusted, subject to pre-audit by the **EAO**, in an amount based on the difference between the cost of such **Extra Work** and of the omitted or reduced **Work**.

26.5 Where the **Contractor** and the **Commissioner** can agree upon a fixed price for **Extra Work** in accordance with Article 25.3.2 or another method of payment for **Extra Work** in accordance with Article 25.3.4, or for **Extra Work** ordered in connection with omitted **Work**, such method, subject to pre-audit by the **EAO**, may, at the option of the **Commissioner**, be substituted for the cost plus a percentage method provided in Article 26.2; provided, however, that if the **Extra Work** is performed by a **Subcontractor**, the **Contractor** shall not be entitled to receive more than an additional allowance of five (5%) percent for overhead and profit over

the cost of such **Subcontractor's Work** as computed in accordance with Article 26.2.

ARTICLE 27. RESOLUTION OF DISPUTES

27.1 All disputes between the **City** and the **Contractor** of the kind delineated in this Article 27.1 that arise under, or by virtue of, this **Contract** shall be finally resolved in accordance with the provisions of this Article 27 and the **PPB** Rules. This procedure for resolving all disputes of the kind delineated herein shall be the exclusive means of resolving any such disputes.

27.1.1 This Article 27 shall not apply to disputes concerning matters dealt with in other sections of the **PPB** Rules, or to disputes involving patents, copyrights, trademarks, or trade secrets (as interpreted by the courts of New York State) relating to proprietary rights in computer software.

27.1.2 This Article 27 shall apply only to disputes about the scope of **Work** delineated by the **Contract**, the interpretation of **Contract** documents, the amount to be paid for **Extra Work** or disputed work performed in connection with the **Contract**, the conformity of the **Contractor's Work** to the **Contract**, and the acceptability and quality of the **Contractor's Work**; such disputes arise when the **Engineer**, **Resident Engineer**, **Engineering Audit Officer**, or other designee of the **Commissioner** makes a determination with which the **Contractor** disagrees.

27.2 All determinations required by this Article 27 shall be made in writing clearly stated, with a reasoned explanation for the determination based on the information and evidence presented to the party making the determination. Failure to make such determination within the time required by this Article 27 shall be deemed a non-determination without prejudice that will allow application to the next level.

27.3 During such time as any dispute is being presented, heard, and considered pursuant to this Article 27, the **Contract** terms shall remain in force and the **Contractor** shall continue to perform **Work** as directed by the **ACCO** or the **Engineer**. Failure of the **Contractor** to continue **Work** as directed shall constitute a waiver by the **Contractor** of its claim.

27.4 Presentation of Disputes to **Commissioner**.

Notice of Dispute and Agency Response. The **Contractor** shall present its dispute in writing ("Notice of Dispute") to the **Commissioner** within thirty (30) Days of receiving written notice of the determination or action that is the subject of the dispute. This notice requirement shall not be read to replace any other notice requirements contained in the **Contract**. The Notice of Dispute shall include all the facts, evidence, documents, or other basis upon which the **Contractor** relies in support of its position, as well as a detailed computation demonstrating how any amount of money claimed by the **Contractor** inthe dispute was arrived at. Within thirty (30) Days after receipt of the detailed written submission comprising the complete Notice of Dispute, the **Engineer**, **Resident Engineer**, **Engineering Audit Officer**, or other designee of the **Commissioner** shall submit to the **Commissioner** all materials he or she deems pertinent to the dispute. Following initial submissions to the **Commissioner**, either party may demand of the other the production of any document or other material the demanding party believes may be relevant to the dispute. The requested party shall produce all relevant materials that are not otherwise protected by a legal privilege recognized by the courts of New York State. Any question of relevancy shall be determined by the **Commissioner** whose decision shall be final. Willful failure of the **Contractor** to produce any requested material whose relevancy the **Contractor** has not disputed, or whose relevancy has been affirmatively determined, shall constitute a waiver by the **Contractor** of its claim.

27.4.1 **Commissioner** Inquiry. The **Commissioner** shall examine the material and may, in his or her discretion, convene an informal conference with the **Contractor**, the **ACCO**, and the **Engineer**, **Resident Engineer**, **Engineering Audit Officer**, or other designee of the **Commissioner** to resolve the issue by mutual consent prior to reaching a determination. The **Commissioner** may seek such technical or other expertise as he or she shall deem appropriate, including the use of neutral mediators, and require any such additional material from either or both parties as he or she deems fit. The **Commissioner's** ability to render, and the effect of, a decision hereunder shall not be impaired by any negotiations in connection with the dispute presented, whether or not the **Commissioner** participated therein. The **Commissioner** may or, at the request of any party to the dispute, shall compel the participation of any **Other Contractor** with a contract related to the **Work** of this **Contract**, and that **Contractor** shall be bound by the decision of the **Commissioner**. Any **Other Contractor** thus brought into the dispute resolution proceeding shall have the same rights and obligations under this Article 27 as the **Contractor** initiating the dispute.

27.4.2 **Commissioner** Determination. Within thirty (30) **Days** after the receipt of all materials and information, or such longer time as may be agreed to by the parties, the **Commissioner** shall make his or her determination and shall deliver or send a copy of such determination to the **Contractor**, the **ACCO,** and **Engineer**, **Resident Engineer**,**Engineering Audit Officer**, or other designee of the **Commissioner**, as applicable, together with a statement concerning how the decision may be appealed.

27.4.3 Finality of **Commissioner's** Decision. The **Commissioner's** decision shall be final and binding on all parties, unless presented to the Contract Dispute Resolution Board pursuant to this Article 27. The **City** may not take a petition to the Contract Dispute Resolution Board. However, should the **Contractor** take such a petition, the **City** may seek, and the Contract Dispute Resolution Board may render, a determination less favorable to the **Contractor** and more favorable to the **City** than the decision of the **Commissioner**.

27.5 Presentation of Dispute to the **Comptroller**. Before any dispute may be brought by the **Contractor** to the Contract Dispute Resolution Board, the **Contractor** must first present its claim to the **Comptroller** for his or her review, investigation, and possible adjustment.

27.5.1 Time, Form, and Content of Notice. Within thirty (30) **Days** of its receipt of a decision by the **Commissioner,** the **Contractor** shall submit to the **Comptroller** and to the **Commissioner** a Notice of Claim regarding its dispute with the **Agency**. The Notice of Claim shall consist of (i) a brief written statement of the substance of the dispute, the amount of money, if any, claimed and the reason(s) the **Contractor** contends the dispute was wrongly decided by the **Commissioner**; (ii) a copy of the written decision of the **Commissioner**; and (iii) a copy of all materials submitted by the **Contractor** to the **Agency**, including the Notice of Dispute. The **Contractor** may not present to the **Comptroller** any material not presented to the **Commissioner**, except at the request of the **Comptroller**.

27.5.2 Response. Within thirty (30) **Days** of receipt of the Notice of Claim, the **Agency** shall make available to the **Comptroller** a copy of all material submitted by the **Agency** to the **Commissioner** in connection with the dispute. The **Agency** may not present to the **Comptroller** any material not presented to the **Commissioner** except at the request of the **Comptroller**.

27.5.3 **Comptroller** Investigation. The **Comptroller** may investigate the claim in dispute and, in the course of such investigation, may exercise all powers provided in Sections 7-201 and 7-203 of the Administrative Code. In addition, the **Comptroller** may demand of either party, and such party shall provide, whatever additional material the **Comptroller** deems pertinent to the claim, including original business records of the **Contractor**. Willful failure of the **Contractor** to produce within fifteen (15) **Days** any material requested by the **Comptroller** shall constitute a waiver by the **Contractor** of its claim. The **Comptroller** may also schedule an informal conference to be attended by the **Contractor**, **Agency** representatives, and any other personnel desired by the **Comptroller**.

27.5.4 Opportunity of **Comptroller** to Compromise or Adjust Claim. The **Comptroller** shall have forty-five (45) **Days** from his or her receipt of all materials referred to in Article 27.5.3 to investigate the disputed claim. The period for investigation and compromise may be further extended by agreement between the **Contractor** and the **Comptroller**, to a maximum of ninety (90) **Days** from the **Comptroller's** receipt of all materials. The **Contractor** may not present its petition to the Contract Dispute Resolution Board until the period for investigation and compromise delineated in this Article 27.5.4 has expired. In compromising or adjusting any claim hereunder, the **Comptroller** may not revise or disregard the terms of the **Contract** between the parties.

27.6 Contract Dispute Resolution Board. There shall be a Contract Dispute Resolution Board composed of:

27.6.1 The chief administrative law judge of the Office of Administrative Trials and Hearings (OATH) or his/her designated OATH administrative law judge, who shall act as chairperson, and may adopt operational procedures and issue such orders consistent with this Article 27 as may be necessary in the execution of the Contract Dispute Resolution Board's functions, including, but not limited to, granting extensions of time to present or respond to submissions;

27.6.2 The **CCPO** or his/her designee; any designee shall have the requisite background to consider and resolve the merits of the dispute and shall not have participated personally and substantially in the particular matter that is the subject of the dispute or report to anyone who so participated; and

27.6.3 A person with appropriate expertise who is not an employee of the **City**. This person shall be selected by the presiding administrative law judge from a prequalified panel of individuals, established and administered by OATH with appropriate background to act as decision-makers in a dispute. Such individual may not have a contract or dispute with the **City** or be an officer or employee of any company or organization that does, or regularly represents persons, companies, or organizations having disputes with the **City**.

27.7 Petition to the Contract Dispute Resolution Board. In the event the claim has not been settled or adjusted by the **Comptroller** within the period provided in this Article 27, the **Contractor**, within thirty (30) **Days** thereafter, may petition the Contract Dispute Resolution Board to review the

Commissioner's determination.

27.7.1 Form and Content of Petition by **Contractor**. The **Contractor** shall present its dispute to the Contract Dispute Resolution Board in the form of a petition, which shall include (i) a brief written statement of the substance of the dispute, the amount of money, if any, claimed, and the reason(s) the **Contractor** contends the dispute was wrongly decided by the **Commissioner**; (ii) a copy of the written Decision of the **Commissioner,** (iii) copies of all materials submitted by the **Contractor** to the Agency; (iv) a copy of the written decision of the **Comptroller**, if any, and (v) copies of all correspondence with, or written material submitted by the **Contractor**, to the **Comptroller**. The **Contractor** shall concurrently submit four (4) complete sets of the Petition: one set to the **City** Corporation Counsel (Attn: Commercial and Real Estate Litigation Division) and three (3) sets to the Contract Dispute Resolution Board at OATH's offices with proof of service on the **City** Corporation Counsel. In addition, the **Contractor** shall submit a copy of the written statement of the substance of the dispute, cited in (i) above, to both the **Commissioner** and the **Comptroller**.

27.7.2 **Agency** Response. Within thirty (30) **Days** of its receipt of the Petition by the **City** Corporation Counsel, the **Agency** shall respond to the brief written statement of the **Contractor** and make available to the Contract Dispute Resolution Board all material it submitted to the **Commissioner** and **Comptroller**. Three (3) complete copies of the **Agency** response shall be provided to the Contract Dispute Resolution Board and one to the **Contractor**. Extensions of time for submittal of the **Agency** response shall be given as necessary upon a showing of good cause or, upon consent of the parties, for an initial period of up to thirty (30) Days.

27.7.3 Further Proceedings. The Contract Dispute Resolution Board shall permit the **Contractor** to present its case by submission of memoranda, briefs, and oral argument. The Contract Dispute Resolution Board shall also permit the **Agency** to present its case in response to the **Contractor** by submission of memoranda, briefs, and oral argument. If requested by the **City** Corporation Counsel, the **Comptroller** shall provide reasonable assistance in the preparation of the **Agency's** case. Neither the **Contractor** nor the **Agency** may support its case with any documentation or other material that was not considered by the **Comptroller**, unless requested by the Contract Dispute Resolution Board. The Contract Dispute Resolution Board, in its discretion, may seek such technical or other expert advice as it shall deem appropriate and may seek, on its own or upon application of a party, any such additional material from any party as it deems fit. The Contract Dispute Resolution Board, in its discretion, may combine more than one dispute between the parties for concurrent resolution.

27.7.4 Contract Dispute Resolution Board Determination. Within forty-five (45) **Days** of the conclusion of all written submissions and oral arguments, the Contract Dispute Resolution Board shall render a written decision resolving the dispute. In an unusually complex case, the Contract Dispute Resolution Board may render its decision in a longer period, not to exceed ninety (90) **Days**, and shall so advise the parties at the commencement of this period. The Contract Dispute Resolution Board's decision must be consistent with the terms of the **Contract**. Decisions of the Contract Dispute Resolution Board shall only resolve matters before the Contract Dispute Resolution Board and shall not have precedential effect with respect to matters not before the Contract Dispute Resolution Board.

27.7.5 Notification of Contract Dispute Resolution Board Decision. The Contract Dispute Resolution Board shall send a copy of its decision to the **Contractor**, the **ACCO**, the Engineer, the **Comptroller**, the **City** Corporation Counsel, the CCPO, and the **PPB**. A decision in favor of the **Contractor** shall be subject to the prompt payment provisions of the **PPB** Rules. The

Required Payment Date shall be thirty (30) Days after the date the parties are formally notified of the Contract Dispute Resolution Board's decision.

27.7.6 Finality of Contract Dispute Resolution Board Decision. The Contract Dispute Resolution Board's decision shall be final and binding on all parties. Any party may seek review of the Contract Dispute Resolution Board's decision solely in the form of a challenge, filed within four (4) months of the date of the Contract Dispute Resolution Board's decision, in a court of competent jurisdiction of the State of New York, County of New York pursuant to Article 78 of the Civil Practice Law and Rules. Such review by the court shall be limited to the question of whether or not the Contract Dispute Resolution Board's decision was made in violation of lawful procedure, was affected by an error of **Law**, or was arbitrary and capricious or an abuse of discretion. No evidence or information shall be introduced or relied upon in such proceeding that was not presented to the Contract Dispute Resolution Board in accordance with this Article 27.

27.8 Any termination, cancellation, or alleged breach of the **Contract** prior to or during the pendency of any proceedings pursuant to this Article 27 shall not affect or impair the ability of the **Commissioner** or Contract Dispute Resolution Board to make a binding and final decision pursuant to this Article 27.

ARTICLE 28. RECORD KEEPING FOR EXTRA OR DISPUTED WORK OR WORK ON ATIME & MATERIALS BASIS

28.1 While the **Contractor** or any of its **Subcontractors** is performing **Work** on a time and material basis or **Extra Work** on a time and material basis ordered by the **Commissioner** under Article 25, or where the **Contractor** believes that it or any of its **Subcontractors** is performing **Extra Work** but a final determination by **Agency** has not been made, or the **Contractor** or any of its **Subcontractors** is performing disputed **Work** (whether on or off the **Site**), or complying with a determination or order under protest in accordance with Articles 11, 27, and 30, in each such case the **Contractor** shall furnish the **Resident Engineer** daily with three (3) copies of written statements signed by the **Contractor's** representative at the **Site** showing:

28.1.1 The name, trade, and number of each worker employed on such **Work** or engaged in complying with such determination or order, the number of hours employed, and the character of the **Work** each is doing; and

28.1.2 The nature and quantity of any materials, plant and equipment furnished or used in connection with the performance of such **Work** or compliance with such determination or order, and from whom purchased or rented.

28.2 A copy of such statement will be countersigned by the **Resident Engineer**, noting thereon any items not agreed to or questioned, and will be returned to the **Contractor** within two (2) **Days** after submission.

28.3 The **Contractor** and its **Subcontractors**, when required by the **Commissioner**, or the **Comptroller**, shall also produce for inspection, at the office of the **Contractor** or **Subcontractor**, any and all of its books, bid documents, financial statements, vouchers, records, daily job diaries and reports, and cancelled checks, and any other documents relating to showing the nature and quantity of the labor, materials, plant and equipment actually used in the performance of such **Work**, or in complying with such determination or order, and the amounts expended therefor, and shall permit the **Commissioner** and the

Comptroller to make such extracts therefrom, or copies thereof, as they or either of them may desire.

28.4 In connection with the examination provided for herein, the **Commissioner**, upon demand therefor, will produce for inspection by the **Contractor** such records as the **Agency** may have withrespect to such **Extra Work** or disputed **Work** performed under protest pursuant to order of the **Commissioner**, except those records and reports which may have been prepared for the purpose of determining the accuracy and validity of the **Contractor's** claim.

28.5 Failure to comply strictly with these requirements shall constitute a waiver of any claim for extra compensation or damages on account of the performance of such **Work** or compliance with such determination or order.

ARTICLE 29. OMITTED WORK

29.1 If any **Contract Work** in a lump sum **Contract**, or if any part of a lump sum item in a unit price, lump sum, or percentage-bid **Contract** is omitted by the **Commissioner** pursuant to Article 33, the **Contract** price, subject to audit by the EAO, shall be reduced by a pro rata portion of the lump sum bid amount based upon the percent of **Work** omitted subject to Article 29.4. For the purpose of determining the pro rata portion of the lump sum bid amount, the bid breakdown submitted in accordance with Article 41 shall be considered, but shall not be the determining factor.

29.2 If the whole of a lump sum item or units of any other item is so omitted by the **Commissioner** in a unit price, lump sum, or percentage-bid **Contract**, then no payment will be made therefor except as provided in Article 29.4.

29.3 For units that have been ordered but are only partially completed, the unit price shall be reduced by a pro rata portion of the unit price bid based upon the percentage of **Work** omitted subject to Article 29.4.

29.4 In the event the **Contractor**, with respect to any omitted **Work**, has purchased any non-cancelable material and/or equipment that is not capable of use except in the performance of this **Contract** and has been specifically fabricated for the sole purpose of this **Contract**, but not yet incorporated into the **Work**, the **Contractor** shall be paid for such material and/or equipment in accordance with Article 64.2.1(b); provided, however, such payment is contingent upon the **Contractor's** delivery of such material and/or equipment in acceptable condition to a location designated by the **City**.

29.5 The **Contractor** agrees to make no claim for damages or for loss of overhead and profit with regard to any omitted **Work**.

ARTICLE 30. NOTICE AND DOCUMENTATION OF COSTS AND DAMAGES; PRODUCTION OF FINANCIAL RECORDS

30.1 If the **Contractor** shall claim to be sustaining damages by reason of any act or omission of the **City** or its agents, it shall submit to the **Commissioner** within forty-five (45) **Days** from the time such damages are first incurred, and every thirty (30) **Days** thereafter to the extent additional damages are being incurred for the same condition, verified statements of the details and the amounts of such damages, together with documentary evidence of such damages. The **Contractor** may submit any of the above statements within such additional time as may be granted by the **Commissioner** in writing upon written request therefor. Failure of the **Commissioner** to respond in writing to a written request for additional time within thirty (30) **Days** shall be deemed a denial of the request. On failure of the **Contractor** to strictly comply with

the foregoing provisions, such claims shall be deemed waived and no right to recover on such claims shall exist. Damages that the **Contractor** may claim in any action or dispute resolution procedure arising under or by reason of this **Contract** shall not be different from or in excess of the statements and documentation made pursuant to this Article 30. This Article 30.1 does not apply to claims submitted to the **Commissioner** pursuant to Article 11 or to claims disputing a determination under Article 27.

30.2 In addition to the foregoing statements, the **Contractor** shall, upon notice from the **Commissioner**, produce for examination at the **Contractor's** office, by the **Engineer**, **Architect** or **Project Manager**, all of its books of account, bills, invoices, payrolls, subcontracts, time books, daily reports, bank deposit books, bank statements, check books, and cancelled checks, showing all of its acts and transactions in connection with or relating to or arising by reason of this **Contract**, and submit itself and persons in its employment, for examination under oath by any person designated by the **Commissioner** or **Comptroller** to investigate claims made or disputes against the **City** under this **Contract**. At such examination, a duly authorized representative of the **Contractor** may be present.

30.3 In addition to the statements required under Article 28 and this Article 30, the **Contractor** and/or its **Subcontractor** shall, within thirty (30) **Days** upon notice from the **Commissioner** or **Comptroller**, produce for examination at the **Contractor's** and/or **Subcontractor's** office, by a representative of either the **Commissioner** or **Comptroller**, all of its books of account, bid documents, financial statements, accountant workpapers, bills, invoices, payrolls, subcontracts, time books, daily reports, bank deposit books, bank statements, check books, and cancelled checks, showing all of its acts and transactions in connection with or relating to or arising by reason of this **Contract**. Further, the **Contractor** and/or its **Subcontractor** shall submit any person in its employment, for examination under oath by any person designated by the **Commissioner** or **Comptroller** to investigate claims made or disputes against the **City** under this **Contract**. At such examination, a duly authorized representative of the **Contractor** may be present.

30.4 Unless the information and examination required under Article 30.3 is provided by the **Contractor** and/or its **Subcontractor** upon thirty (30) **Days'** notice from the **Commissioner** or **Comptroller**, or upon the **Commissioner's** or **Comptroller's** written authorization to extend the time to comply, the **City** shall be released from all claims arising under, relating to or by reason of this **Contract**, except for sums certified by the **Commissioner** to be due under the provisions of this **Contract**. It is further stipulated and agreed that no person has the power to waive any of the foregoing provisions and that in any action or dispute resolution procedure against the **City** to recover any sum in excess of the sums certified by the **Commissioner** to be due under or by reason of this **Contract**, the **Contractor** must allege in its complaint and prove, at trial or during such dispute resolution procedure, compliance with the provisions of this Article 30.

30.5 In addition, after the commencement of any action or dispute resolution procedure by the **Contractor** arising under or by reason of this **Contract**, the **City** shall have the right to require the **Contractor** to produce for examination under oath, up until the trial of the action or hearing before the Contract Dispute Resolution Board, the books and documents described in Article 30.3 and submit itself and all persons in its employ for examination under oath. If this Article 30 is not complied with as required, then the **Contractor** hereby consents to the dismissal of the action or dispute resolutionprocedure.

CHAPTER VII: POWERS OF THE RESIDENT ENGINEER, THE ENGINEER ORARCHITECT AND THE COMMISSIONER

ARTICLE 31. THE RESIDENT ENGINEER

31.1 The **Resident Engineer** shall have the power to inspect, supervise, and control the performance

of the **Work**, subject to review by the **Commissioner**. The **Resident Engineer** shall not, however, have the power to issue an **Extra Work** order, except as specifically designated in writing bythe **Commissioner**.

ARTICLE 32. THE ENGINEER OR ARCHITECT OR PROJECT MANAGER

32.1 The **Engineer** or **Architect** or **Project Manager**, in addition to those matters elsewhere herein delegated to the **Engineer** and expressly made subject to his/her determination, direction or approval, shall have the power, subject to review by the **Commissioner**:

32.1.1 To determine the amount, quality, and location of the **Work** to be paid for hereunder; and

32.1.2 To determine all questions in relation to the **Work**, to interpret the **Contract Drawings**, **Specifications**, and **Addenda**, and to resolve all patent inconsistencies or ambiguities therein; and

32.1.3 To determine how the **Work** of this **Contract** shall be coordinated with **Work** of **Other Contractors** engaged simultaneously on this **Project**, including the power to suspend any part of the **Work**, but not the whole thereof; and

32.1.4 To make minor changes in the **Work** as he/she deems necessary, provided such changes do not result in a net change in the cost to the **City** or to the **Contractor** of the **Work** to be done under the **Contract**; and

32.1.5 To amplify the **Contract Drawings**, add explanatory information and furnish additional **Specifications** and drawings, consistent with this **Contract**.

32.2 The foregoing enumeration shall not imply any limitation upon the power of the **Engineer** or **Architect** or **Project Manager**, for it is the intent of this **Contract** that all of the **Work** shall generally be subject to his/her determination, direction, and approval, except where the determination, direction or approval of someone other than the **Engineer** or **Architect** or **Project Manager** is expressly called for herein.

32.3 The **Engineer** or **Architect** or **Project Manager** shall not, however, have the power to issuean **Extra Work** order, except as specifically designated in writing by the **Commissioner**.

ARTICLE 33. THE COMMISSIONER

33.1 The **Commissioner**, in addition to those matters elsewhere herein expressly made subject to his/her determination, direction or approval, shall have the power:

33.1.1 To review and make determinations on any and all questions in relation to this **Contract** and its performance; and

33.1.2 To modify or change this **Contract** so as to require the performance of **Extra Work** (subject, however, to the limitations specified in Article 25) or the omission of **Contract Work**; and

33.1.3 To suspend the whole or any part of the **Work** whenever in his/her judgment such suspension is required:

33.1.3(a) In the interest of the **City** generally; or

33.1.3(b) To coordinate the **Work** of the various contractors engaged on this **Project** pursuant to the provisions of Article 12; or

33.1.3(c) To expedite the completion of the entire **Project** even though the completion of this particular **Contract** may thereby be delayed.

ARTICLE 34. NO ESTOPPEL

34.1 Neither the **City** nor any **Agency**, official, agent or employee thereof, shall be bound, precluded or estopped by any determination, decision, approval, order, letter, payment or certificate made or given under or in connection with this **Contract** by the **City**, the **Commissioner**, the **Engineer**, the **Resident Engineer**, or any other official, agent or employee of the **City**, either before or after the final completion and acceptance of the **Work** and payment therefor:

34.1.1 From showing the true and correct classification, amount, quality or character of the **Work** actually done; or that any such determination, decision, order, letter, payment or certificate was untrue, incorrect or improperly made in any particular, or that the **Work**, or any part thereof, does not in fact conform to the requirements of this **Contract**; and

34.1.2 From demanding and recovering from the **Contractor** any overpayment made to it, or such damages as the **City** may sustain by reason of the **Contractor's** failure to perform each and every part of its **Contract**.

CHAPTER VIII: LABOR PROVISIONS

ARTICLE 35. EMPLOYEES

35.1 The **Contractor** and its **Subcontractors** shall not employ on the **Work**:

35.1.1 Anyone who is not competent, faithful and skilled in the **Work** for which he/she shall be employed; and whenever the **Commissioner** shall inform the **Contractor**, in writing, that any employee is, in his/her opinion, incompetent, unfaithful or disobedient, that employee shall be discharged from the **Work** forthwith, and shall not again be employed upon it; or

35.1.2 Any labor, materials or means whose employment, or utilization during the course of this **Contract**, may tend to or in any way cause or result in strikes, work stoppages, delays, suspension of **Work** or similar troubles by workers employed by the **Contractor** or its **Subcontractors**, or by any of the trades working in or about the buildings and premises where **Work** is being performed under this **Contract**, or by **Other Contractors** or their **Subcontractors** pursuant to other contracts, or on any other building or premises owned or operated by the **City**, its **Agencies**, departments, boards or authorities. Any violation by the **Contractor** of this requirement may, upon certification of the **Commissioner**, be considered as proper and sufficient cause for declaring the **Contractor** to be in default, and for the **City** to take action against it as set forth in Chapter X of this **Contract**, or such other article of this **Contract** as the Commissioner may deem proper; or

35.1.3 In accordance with Section 220.3-e of the Labor Law of the State of New York (hereinafter "Labor Law"), the **Contractor** and its **Subcontractors** shall not employ on the **Work** any apprentice, unless he/she is a registered individual, under a bona fide program registered with the New York State Department of Labor. The allowable ratio of apprentices to journey-level workers in any craft classification shall not be greater than the ratio permitted to the **Contractor** as to its work force on any job under the registered program. Any employee listed on a payroll at an apprentice wage rate, who is not registered as above, shall be paid the wage rate determined by the **Comptroller** of the **City** for the classification of **Work** actually performed. The **Contractor** or **Subcontractor** will be required to furnish written evidence of the registration of its program and apprentices as well as all the appropriate ratios and wage rates, for the area of the construction prior to using any apprentices on the **Contract Work**.

35.2 If the total cost of the **Work** under this **Contract** is at least two hundred fifty thousand ($250,000) dollars, all laborers, workers, and mechanics employed in the performance of the C**ontract** on the public work site, either by the **Contractor**, **Subcontractor** or other person doing or contracting to do the whole or a part of the **Work** contemplated by the **Contract**, shall be certified prior to performing any **Work** as having successfully completed a course in construction safety and health approved by the United States Department of Labor's Occupational Safety and Health Administration that is at least ten (10) hours in duration.

35.3 In accordance with Local Law Nos. 30-2012 and 33-2012, codified at sections 6-132 and 12-113 of the Administrative Code, respectively,

35.3.1 The **Contractor** shall not take an adverse personnel action with respect to an officer or employee in retaliation for such officer or employee making a report of information concerning conduct which such officer or employee knows or reasonably believes to involve corruption, criminal activity, conflict of interest, gross mismanagement or abuse of authority by any officer or employee relating to this **Contract** to (a) the Commissioner of the Department of Investigation, (b) a member of the New York City Council, the Public Advocate, or the **Comptroller**, or (c) the **CCPO**, **ACCO**, **Agency** head, or **Commissioner**.

35.3.2 If any of the **Contractor**'s officers or employees believes that he or she has been the subject of an adverse personnel action in violation of Article 35.3.1, he or she shall be entitled to bring a cause of action against the **Contractor** to recover all relief necessary to make him or her whole. Such relief may include but is not limited to: (a) an injunction to restrain continued retaliation, (b) reinstatement to the position such employee would have had but for the retaliation or to an equivalent position, (c) reinstatement of full fringe benefits and seniority rights, (d) payment of two times back pay, plus interest, and (e) compensation for any special damages sustained as a result of the retaliation, including litigation costs and reasonable attorney's fees.

35.3.3 The **Contractor** shall post a notice provided by the **City** in a prominent and accessible place on any site where work pursuant to the **Contract** is performed that contains information about:

35.3.3(a) how its employees can report to the New York City Department of Investigation allegations of fraud, false claims, criminality or corruption arising outof or in connection with the **Contract**; and

35.3.3(b) the rights and remedies afforded to its employees under Administrative Code sections 7-805 (the New York City False Claims Act) and 12-113 (the Whistleblower Protection Expansion Act) for lawful acts taken in connection withthe

reporting of allegations of fraud, false claims, criminality or corruption in connection with the **Contract**.

35.3.4 For the purposes of this Article 35.3, "adverse personnel action" includes dismissal, demotion, suspension, disciplinary action, negative performance evaluation, any action resulting in loss of staff, office space, equipment or other benefit, failure to appoint, failure to promote, or any transfer or assignment or failure to transfer or assign against the wishes of the affected officer or employee.

35.3.5 This Article 35.3 is applicable to all of the **Contractor**'s **Subcontractors** having subcontracts with a value in excess of $100,000; accordingly, the **Contractor** shall include this rider in all subcontracts with a value a value in excess of $100,000.

35.4 Article 35.3 is not applicable to this **Contract** if it is valued at $100,000 or less. Articles 35.3.1, 35.3.2, 35.3.4, and 35.3.5 are not applicable to this **Contract** if it was solicited pursuant to a finding of an emergency.

35.5 Paid Sick Leave Law.

35.5.1 Introduction and General Provisions.

35.5.1(a) The Earned Sick Time Act, also known as the Paid Sick Leave Law ("PSLL"), requires covered employees who annually perform more than 80 hours of work in New York City to be provided with paid sick time[2]. Contractors of the **City** or of other governmental entities may be required to provide sick time pursuant to the PSLL.

35.5.1(b) The PSLL became effective on April 1, 2014, and is codified at Title 20, Chapter 8, of the New York City Administrative Code. It is administered by the City's Department of Consumer Affairs ("DCA"); DCA's rules promulgated under the PSLL are codified at Chapter 7 of Title 6 of the Rules of the City of New York ("Rules").

35.5.1(c) The **Contractor** agrees to comply in all respects with the PSLL and the Rules, and as amended, if applicable, in the performance of this **Contract**. The **Contractor** further acknowledges that such compliance is a material term of this **Contract** and that failure to comply with the PSLL in performance of this **Contract** may result in its termination.

35.5.1(d) The **Contractor** must notify the **Agency Chief Contracting Officer** of the **Agency** with whom it is contracting in writing within ten (10) days of receipt of a complaint (whether oral or written) regarding the PSLL involving the performance of this **Contract**. Additionally, the **Contractor** must cooperate with DCA's education efforts and must comply with DCA's subpoenas and other document demands as set forth in the PSLL and Rules.

35.5.1(e) The PSLL is summarized below for the convenience of the **Contractor**. The **Contractor** is advised to review the PSLL and Rules in their entirety. On the

[2] Pursuant to the PSLL, if fewer than five employees work for the same employer, as determined pursuant to New York City Administrative Code § 20-912(g), such employer has the option of providing such employees uncompensated sick time.

website www.nyc.gov/PaidSickLeave there are links to the PSLL and the associated Rules as well as additional resources for employers, such as Frequently Asked Questions, timekeeping tools and model forms, and an event calendar of upcoming presentations and webinars at which the **Contractor** can get more information about how to comply with the PSLL. The **Contractor** acknowledges that it is responsible for compliance with the PSLL notwithstanding any inconsistent language contained herein.

35.5.2 Pursuant to the PSLL and the Rules: Applicability, Accrual, and Use.

35.5.2(a) An employee who works within the City of New York for more than eighty hours in any consecutive 12-month period designated by the employer as its "calendar year" pursuant to the PSLL ("Year") must be provided sick time. Employers must provide a minimum of one hour of sick time for every 30 hours worked by an employee and compensation for such sick time must be provided at the greater of the employee's regular hourly rate or the minimum wage. Employers are not required to provide more than 40 hours of sick time to an employee in any Year.

35.5.2(b) An employee has the right to determine how much sick time he or she will use, provided that employers may set a reasonable minimum increment for the use of sick time not to exceed four hours per **Day**. In addition, an employee may carry over up to 40 hours of unused sick time to the following Year, provided that no employer is required to allow the use of more than forty hours of sick time in a Year or carry over unused paid sick time if the employee is paid for such unused sick time and the employer provides the employee with at least the legally required amount of paid sick time for such employee for the immediately subsequent Year on the first **Day** of such Year.

35.5.2(c) An employee entitled to sick time pursuant to the PSLL may use sick time for any of the following:

i. such employee's mental illness, physical illness, injury, or health condition or the care of such illness, injury, or condition or such employee's need for medical diagnosis or preventive medical care;
ii. such employee's care of a family member (an employee's child, spouse, domestic partner, parent, sibling, grandchild or grandparent, or the child or parent of an employee's spouse or domestic partner) who has a mental illness, physical illness, injury or health condition or who has a need for medical diagnosis or preventive medical care;
iii. closure of such employee's place of business by order of a public official due to a public health emergency; or
iv. such employee's need to care for a child whose school or childcare providerhas been closed due to a public health emergency.

35.5.2(d) An employer must not require an employee, as a condition of taking sick time, to search for a replacement. However, an employer may require an employee to provide: reasonable notice of the need to use sick time; reasonable documentation that the use of sick time was needed for a reason above if for an absence of more than three consecutive work days; and/or written confirmation that an employee used sick time pursuant to the PSLL. However, an employer may not require documentation specifying the nature of a medical condition or otherwise require disclosure of the details of a medical condition as a condition of providing sick time and health information obtained solely due to an employee's use of sick time pursuant to the PSLL must be treated by the

employer as confidential.

35.5.2(e) If an employer chooses to impose any permissible discretionary requirement as a condition of using sick time, it must provide to all employees a written policy containing those requirements, using a delivery method that reasonably ensures that employees receive the policy. If such employer has not provided its written policy, it may not deny sick time to an employee because of non-compliance with such a policy.

35.5.2(f) Sick time to which an employee is entitled must be paid no later than the payday for the next regular payroll period beginning after the sick time was used.

35.5.3 Exemptions and Exceptions. Notwithstanding the above, the PSLL does not apply to any of the following:

35.5.3(a) an independent contractor who does not meet the definition of employee under section 190(2) of the New York State Labor Law;

35.5.3(b) an employee covered by a valid collective bargaining agreement in effect on April 1, 2014, until the termination of such agreement;

35.5.3(c) an employee in the construction or grocery industry covered by a valid collective bargaining agreement if the provisions of the PSLL are expressly waived in such collective bargaining agreement;

35.5.3(d) an employee covered by another valid collective bargaining agreement if such provisions are expressly waived in such agreement and such agreement provides a benefit comparable to that provided by the PSLL for such employee;

35.5.3(e) an audiologist, occupational therapist, physical therapist, or speech language pathologist who is licensed by the New York State Department of Education and who calls in for work assignments at will, determines his or her own schedule, has the ability to reject or accept any assignment referred to him or her, and is paid an average hourly wage that is at least four times the federal minimum wage;

35.5.3(f) an employee in a work study program under Section 2753 of Chapter 42 of the United States Code;

35.5.3(g) an employee whose work is compensated by a qualified scholarship program as that term is defined in the Internal Revenue Code, Section 117 of Chapter 20 of the United States Code; or

35.5.3(h) a participant in a Work Experience Program (WEP) under section 336-c of the New York State Social Services Law.

35.5.4 Retaliation Prohibited. An employer may not threaten or engage in retaliation against an employee for exercising or attempting in good faith to exercise any right provided by the PSLL. In addition, an employer may not interfere with any investigation, proceeding, or hearing pursuant to the PSLL.

35.5.5 Notice of Rights.

35.5.5(a) An employer must provide its employees with written notice of their rights pursuant to the PSLL. Such notice must be in English and the primary language spoken

by an employee, provided that DCA has made available a translation into such language. Downloadable notices are available on DCA's website at http://www.nyc.gov/html/dca/html/law/PaidSickLeave.shtml.

35.5.5(b) Any person or entity that willfully violates these notice requirements is subject to a civil penalty in an amount not to exceed fifty dollars for each employee who was not given appropriate notice.

35.5.6 Records. An employer must retain records documenting its compliance with the PSLL for a period of at least three years, and must allow DCA to access such records in furtherance of an investigation related to an alleged violation of the PSLL.

35.5.7 Enforcement and Penalties.

35.5.7(a) Upon receiving a complaint alleging a violation of the PSLL, DCA has the right to investigate such complaint and attempt to resolve it through mediation. Within 30 **Days** of written notification of a complaint by DCA, or sooner in certain circumstances, the employer must provide DCA with a written response and such other information as DCA may request. If DCA believes that a violation of the PSLL has occurred, it has the right to issue a notice of violation to the employer.

35.5.7(b) DCA has the power to grant an employee or former employee all appropriate relief as set forth in New York City Administrative Code § 20-924(d). Such relief may include, among other remedies, treble damages for the wages that should have been paid, damages for unlawful retaliation, and damages and reinstatement for unlawful discharge. In addition, DCA may impose on an employer found to have violated the PSLL civil penalties not to exceed $500 for a first violation, $750 for a second violation within two years of the first violation, and
$1,000 for each succeeding violation within two years of the previous violation.

35.5.8 More Generous Polices and Other Legal Requirements. Nothing in the PSLL is intended to discourage, prohibit, diminish, or impair the adoption or retention of a more generous sick time policy, or the obligation of an employer to comply with any contract, collective bargaining agreement, employment benefit plan or other agreement providing more generous sick time. The PSLL provides minimum requirements pertaining to sick time and does not preempt, limit or otherwise affect the applicability of any other law, regulation, rule, requirement, policy or standard that provides for greater accrual or use by employees of sick leave or time, whether paid or unpaid, or that extends other protections to employees. The PSLL may not be construed as creating or imposing any requirement in conflict with any federal or state law, rule or regulation.

35.6 HireNYC: Hiring and Reporting Requirements. This Article 35.6 applies to construction contracts of $1,000,000 or more. The **Contractor** shall comply with the requirements of Articles 35.6.1-35.6.5 for all non-trades jobs (e.g., for an administrative position arising out of **Work** ant located in New York City). The **Contractor** shall reasonably cooperate with SBS and the **City** on specific outreach events, including "Hire-on-the-Spot" events, for the hiring of trades workers in connection with the **Work**. If provided elsewhere in this **Contract**, this **Contract** is subject to a project labor agreement.

35.6.1 Enrollment. The **Contractor** shall enroll with the HireNYC system, found at www.nyc.gov/sbs, within thirty (30) days after the registration of this **Contract** pursuant to Section 328 of the New York City Charter. The **Contractor** shall provide information about the business, designate a primary contact and say whether it intends to hire for any entry

to mid-level job opportunities arising from this **Contract** and located in New York City, and, if so, the approximate start date of the first hire.

35.6.2 Job Posting Requirements.

35.6.2(a) Once enrolled in HireNYC, the **Contractor** agrees to update the HireNYC portal with all entry to mid-level job opportunities arising from this **Contract** and located in New York City, if any, which shall be defined as jobs requiring no more than an associate degree, as provided by the New York State Department of Labor (see Column F of https://labor.ny.gov/stats/2012-2022- NYS- Employment-Prospects.xls). The information to be updated includes the types of entry and mid-level positions made available from the work arising from the **Contract** and located in New York City, the number of positions, the anticipated schedule of initiating the hiring process for these positions, and the contact information for the **Contractor's** representative charged with overseeing hiring. The **Contractor** must update the HireNYC portal with any hiring needs arising from the contract and located in New York City, and the requirements of the jobs to be filled, no less than three weeks prior to the intended first day of employment for each new position, except with the permission of SBS, not to be unreasonably withheld, and must also update the HireNYC portal as set forth below.

35.6.2(b) After enrollment through HireNYC and submission of relevant information, SBS will work with the **Contractor** to develop a recruitment plan which will outline the candidate screening process, and will provide clear instructions as to when, where, and how interviews will take place. HireNYC will screen applicants based on employer requirements and refer applicants whom it believes are qualified to the **Contractor** for interviews. The **Contractor** must interview referred applicants whom it believes are qualified.

35.6.2(c) After completing an interview of a candidate referred by HireNYC, the **Contractor** must provide feedback via the portal within twenty (20) business days to indicate which candidates were interviewed and hired, if any. In addition, the **Contractor** shall provide the start date of new hires, and additional information reasonably related to such hires, within twenty (20) business days after the start date. In the event the **Contractor** does not have any job openings covered by this Rider in any given year, the **Contractor** shall be required to provide an annual update to HireNYC to that effect. For this purpose, the reporting year shall run from the date of the registration of the **Contract** pursuant to Charter section 328 and each anniversary date.

35.6.2(d) These requirements do not limit the **Contractor's** ability to assess the qualifications of prospective workers, and to make final hiring and retention decisions. No provision of this Article 35.6 shall be interpreted so as to require the **Contractor** to employ any particular worker.

35.6.2(e) In addition, the provisions of this Article 35.6 shall not apply to positions that the **Contractor** intends to fill with employees employed pursuant to the job retention provision of Section 22-505 of the Administrative Code of the City of New York. The **Contractor** shall not be required to report such openings with HireNYC. However, the **Contractor** shall enroll with the HireNYC system pursuant to Article 35.6.1, above, and, if such positions subsequently become open, then the remaining provisions of this Article 35.6 will apply.

35.6.3 Breach and Liquidated Damages. If the **Contractor** fails to comply with the termsof the **ContrSact** and this Article 35.6 (l) by not enrolling its business with HireNYC; (2) by not informing HireNYC, as required, of open positions; or (3) by failing to interview a qualified candidate, the **Agency** may assess liquidated damages in the amount of two- thousand five hundred dollars ($2,500) per breach. For all other events of noncompliance with the terms of this Article 35.6, the **Agency** may assess liquidated damages in the amount of five hundred dollars ($500) per breach. Furthermore, in the event the **Contractor** breaches the requirements of this Article 35.6 during the term of the **Contract**, the **City** may hold the **Contractor** in default of this **Contract**.

35.6.4 Audit Compliance. In addition to the auditing requirements set forth in other partsof the **Contract**, the **Contractor** shall permit SBS and the **City** to inspect any and all records concerning or relating to job openings or the hiring of individuals for work arising from the **Contract** and located in New York City. The **Contractor** shall permit an inspection within seven (7) business days of the request.

35.6.5 Other Reporting Requirements. The **Contractor** shall report to the **City**, on amonthly basis, all information reasonably requested by the **City** that is necessary for the **City** to comply with any reporting requirements imposed by **Law**, including any requirement that the **City** maintain a publicly accessible database. In addition, the **Contractor** agrees to comply with all reporting requirements imposed by **Law**, or as otherwise requested by the **City**.

35.6.6 Federal Hiring Requirements. If this **Contract** is federally funded (as indicated elsewhere in this Contract), the **Contractor** shall comply with all federal hiring requirements as may be set forth in this **Contract**, including, as applicable: (a) Section 3 of the HUD Act of 1968, which requires, to the greatest extent feasible, economic opportunities for 30 percent of new hires be given to low- and very low-income persons, particularly persons who are recipients of HUD assistance for housing and Executive Order 11246, which prohibits discrimination in employment due to race, color, religion,sex or national origin, and requires the implementation of goals for minority and female participation for work involving any construction trade.

ARTICLE 36. NO DISCRIMINATION

36.1 The **Contractor** specifically agrees, as required by Labor Law Section 220-e, as amended, that:

36.1.1 In the hiring of employees for the performance of **Work** under this **Contract** or any subcontract hereunder, neither the **Contractor**, **Subcontractor**, nor any person acting on behalf of such **Contractor** or **Subcontractor**, shall by reason of race, creed, color or national origin discriminate against any citizen of the State of New York who is qualifiedand available to perform the **Work** to which the employment relates;

36.1.2 Neither the **Contractor**, **Subcontractor**, nor any person on its behalf shall, in any manner, discriminate against or intimidate any employee hired for the performance of **Work** under this **Contract** on account of race, creed, color or national origin;

36.1.3 There may be deducted from the amount payable to the **Contractor** by the **City** under this **Contract** a penalty of fifty ($50.00) dollars for each person for each **Day** during which such person was discriminated against or intimidated in violation of the provisions of this

Contract; and

36.1.4 This **Contract** may be cancelled or terminated by the **City** and all moneys due or to become due hereunder may be forfeited, for a second or any subsequent violation of the terms or conditions of this Article 36.

36.1.5 This Article 36 covers all construction, alteration and repair of any public building or public work occurring in the State of New York and the manufacture, sale, and distribution of materials, equipment, and supplies to the extent that such operations are performed within the State of New York pursuant to this **Contract**.

36.2 The **Contractor** specifically agrees, as required by Section 6-108 of the Administrative Code,as amended, that:

36.2.1 It shall be unlawful for any person engaged in the construction, alteration or repairof buildings or engaged in the construction or repair of streets or highways pursuant to a **Contract** with the **City** or engaged in the manufacture, sale or distribution of materials, equipment or supplies pursuant to a **Contract** with the **City** to refuse to employ or to refuse to continue in any employment any person on account of the race, color or creed of such person.

36.2.2 It shall be unlawful for any person or any servant, agent or employee of any person, described in Article 36.1.2, to ask, indicate or transmit, orally or in writing, directly or indirectly, the race, color or creed or religious affiliation of any person employed or seeking employment from such person, firm or corporation.

36.2.3 Breach of the foregoing provisions shall be deemed a violation of a material provision of this **Contract**.

36.2.4 Any person, or the employee, manager or owner of or officer of such firm or corporation who shall violate any of the provisions of this Article 36.2 shall, upon conviction thereof, be punished by a fine of not more than one hundred ($100.00) dollars or by imprisonment for not more than thirty (30) **Days**, or both.

36.3 This **Contract** is subject to the requirements of Executive Order No. 50 (1980) ("E.O. 50"), as revised, and the rules and regulations promulgated thereunder. No contract will be awarded unless and until these requirements have been complied with in their entirety. By signing this **Contract**, the **Contractor** agrees that it:

36.3.1 Will not engage in any unlawful discrimination against any employee or applicantfor employment because of race, creed, color, national origin, sex, age, disability, marital status or sexual orientation with respect to all employment decisions including, but not limited to, recruitment, hiring, upgrading, demotion, downgrading, transfer, training, ratesof pay or other forms of compensation, layoff, termination, and all other terms and conditions of employment; and

36.3.2 Will not engage in any unlawful discrimination in the selection of **Subcontractors** on the basis of the owner's race, color, creed, national origin, sex, age, disability, marital status or sexual orientation; and

36.3.3 Will state in all solicitations or advertisements for employees placed by or on behalf of the **Contractor** that all qualified applicants will receive consideration for employment without unlawful discrimination based on race, creed, color, national origin, sex, age, citizens status,

disability, marital status, sexual orientation, or that it is an equal employment opportunity employer; and

36.3.4 Will send to each labor organization or representative of workers with which it has a collective bargaining agreement or other contract or memorandum of understanding, written notification of its equal employment opportunity commitments under E.O. 50 and the rules and regulations promulgated thereunder; and

36.3.5 Will furnish, before the award of the **Contract**, all information and reports, including an employment report, that are required by E.O. 50, the rules and regulations promulgated thereunder, and orders of the **City** Department of Business Services, Division of Labor Services (**DLS**) and will permit access to its books, records, and accounts by the **DLS** for the purposes of investigation to ascertain compliance with such rules, regulations, and orders.

36.4 The **Contractor** understands that in the event of its noncompliance with the nondiscrimination clauses of this **Contract** or with any of such rules, regulations, or orders, such noncompliance shall constitute a material breach of this **Contract** and noncompliance with E.O. 50 and the rules and regulations promulgated thereunder. After a hearing held pursuant to the rules of the **DLS**, the Director of the **DLS** may direct the **Commissioner** to impose any or all of the following sanctions:

36.4.1 Disapproval of the **Contractor**; and/or

36.4.2 Suspension or termination of the **Contract**; and/or

36.4.3 Declaring the **Contractor** in default; and/or

36.4.4 In lieu of any of the foregoing sanctions, the Director of the **DLS** may impose an employment program.

In addition to any actions taken under this **Contract**, failure to comply with E.O. 50 and the rules and regulations promulgated thereunder, in one or more instances, may result in a **City Agency** declaring the **Contractor** to be non-responsible in future procurements. The **Contractor** further agrees that it will refrain from entering into any **Contract** or **Contract** modification subject to E.O. 50 and the rules and regulations promulgated thereunder with a **Subcontractor** who is not in compliance with the requirements of E.O. 50 and the rules and regulations promulgated thereunder.

36.5 The **Contractor** specifically agrees, as required by Section 6-123 of the AdministrativeCode, that:

36.5.1 The **Contractor** will not engage in any unlawful discriminatory practice in violation of Title 8 of the Administrative Code; and

36.5.2 Any failure to comply with this Article 36.5 may subject the **Contractor** to the remedies set forth in Section 6-123 of the Administrative Code, including, where appropriate, sanctions such as withholding of payment, imposition of an employment program, finding the **Contractor** to be in default, cancellation of the **Contract**, or any other sanction or remedy provided by **Law** or **Contract**.

ARTICLE 37. LABOR LAW REQUIREMENTS

37.1 The **Contractor** shall strictly comply with all applicable provisions of the Labor Law, as

amended. Such compliance is a material term of this **Contract**.

37.2 The **Contractor** specifically agrees, as required by Labor Law Sections 220 and 220-d, as amended, that:

37.2.1 Hours of **Work**: No laborer, worker, or mechanic in the employ of the **Contractor**, **Subcontractor** or other person doing or contracting to do the whole or a part of the **Work** contemplated by this **Contract** shall be permitted or required to work more than eight (8) hours in any one (1) **Day**, or more than five (5) **Days** in any one (1) week, except as provided in the Labor Law and in cases of extraordinary emergency including fire, flood, or danger to life or property, or in the case of national emergency when so proclaimed by the President of the United States of America.

37.2.2 In situations in which there are not sufficient laborers, workers, and mechanics who may be employed to carry on expeditiously the **Work** contemplated by this **Contract** as a result of such restrictions upon the number of hours and **Days** of labor, and the immediate commencement or prosecution or completion without undue delay of the **Work** is necessary for the preservation of the **Site** and/or for the protection of the life and limb of the persons using the same, such laborers, workers, and mechanics shall be permitted or required to work more than eight (8) hours in any one (1) **Day**; or five (5) **Days** in any one (1) week; provided, however, that upon application of any **Contractor**, the **Commissioner** shall have first certified to the Commissioner of Labor of the State of New York (hereinafter "Commissioner of Labor") that such public **Work** is of an important nature and that a delay in carrying it to completion would result in serious disadvantage to the public; and provided, further, that such Commissioner of Labor shall have determined that such an emergency does in fact exist as provided in Labor Law Section 220.2.

37.2.3 Failure of the **Commissioner** to make such a certification to the Commissioner of Labor shall not entitle the **Contractor** to damages for delay or for any cause whatsoever.

37.2.4 Prevailing Rate of Wages: The wages to be paid for a legal day's **Work** to laborers, workers, or mechanics employed upon the **Work** contemplated by this **Contract** or upon any materials to be used thereon shall not be less than the "prevailing rate of wage" as defined in Labor Law Section 220, and as fixed by the **Comptroller** in the attached Schedule of Wage Rates and in updated schedules thereof. The prevailing wage rates and supplemental benefits to be paid are those in effect at the time the **Work** is being performed.

37.2.5 Requests for interpretation or correction in the Information for Bidders includes all requests for clarification of the classification of trades to be employed in the performance of the **Work** under this **Contract**. In the event that a trade not listed in the **Contract** is in fact employed during the performance of this **Contract**, the **Contractor** shall be required to obtain from the **Agency** the prevailing wage rates and supplementary benefits for the trades used and to complete the performance of this **Contract** at the price at which the **Contract** was awarded.

37.2.6 Minimum Wages: Except for employees whose wage is required to be fixed pursuant to Labor Law Section 220, all persons employed by the **Contractor** and any **Subcontractor** in the manufacture or furnishing of the supplies, materials, or equipment, or the furnishing of work, labor, or services, used in the performance of this **Contract**, shall be paid, without subsequent deduction or rebate unless expressly authorized by **Law**, not less than the sum mandated by **Law**.

37.3 Working Conditions: No part of the **Work**, labor or services shall be performed or rendered by

the **Contractor** in any plants, factories, buildings or surroundings or under working conditions which are unsanitary or hazardous or dangerous to the health and safety of employees engaged in the performance of this **Contract**. Compliance with the safety, sanitary, and factory inspection **Laws** of the state in which the **Work** is to be performed shall be prima facie evidence of compliance with this Article 37.3.

37.4 Prevailing Wage Enforcement: The **Contractor** agrees to pay for all costs incurred by the **City** in enforcing prevailing wage requirements, including the cost of any investigation conducted by or on behalf of the **Agency** or the **Comptroller,** where the **City** discovers a failure to comply with any of the requirements of this Article 37 by the **Contractor** or its **Subcontractor(s)**. The **Contractor** also agrees that, should it fail or refuse to pay for any such investigation, the **Agency** is hereby authorized to deduct from a **Contractor's** account an amount equal to the cost of such investigation.

37.4.1 The Labor Law Section 220 and Section 220-d, as amended, provide that this **Contract** shall be forfeited and no sum paid for any **Work** done hereunder on a second conviction for willfully paying less than:

37.4.1(a) The stipulated prevailing wage scale as provided in Labor Law section 220, as amended, or

37.4.1(b) The stipulated minimum hourly wage scale as provided in Labor Law section 220-d, as amended.

37.4.2 For any breach or violation of either working conditions (Article 37.3) or minimum wages (Article 37.2.6) provisions, the party responsible therefor shall be liable to the **City** for liquidated damages, which may be withheld from any amounts due on any contracts with the **City** of such party responsible, or may be recovered in actions brought by the **City** Corporation Counsel in the name of the **City**, in addition to damages for any other breach of this **Contract**, for a sum equal to the amount of any underpayment of wages due to any employee engaged in the performance of this **Contract**. In addition, the **Commissioner** shall have the right to cancel contracts and enter into other contracts for the completion of the original contract, with or without public letting, and the original **Contractor** shall be liable for any additional cost. All sums withheld or recovered as deductions, rebates, refunds, or underpayment of wages hereunder, shall be held in a special deposit account and shall be paid without interest, on order of the **Comptroller**, directly to the employees who have been paid less than minimum rates of pay as set forth herein and on whose account such sums were withheld or recovered, provided that no claims by employees for such payments shall be entertained unless made within two (2) years from the date of actual notice to the **Contractor** of the withholding or recovery of such sums by the **City**.

37.4.3 A determination by the **Comptroller** that a **Contractor** and/or its **Subcontractor** willfully violated Labor Law Section 220 will be forwarded to the **City's** five District Attorneys for review.

37.4.4 The **Contractor's** or **Subcontractor's** noncompliance with this Article 37.4 and Labor Law Section 220 may result in an unsatisfactory performance evaluation and the **Comptroller** may also find and determine that the **Contractor** or **Subcontractor** willfully violated the New York Labor **Law**.

37.4.4(a) An unsatisfactory performance evaluation for noncompliance with this Article 37.4 may result in a determination that the **Contractor** is a non-responsible bidder on subsequent procurements with the **City** and thus a rejection of a future award

of a contract with the **City**, as well as any other sanctions provided for by**Law**.

37.4.4(b) Labor Law Section 220-b, as amended, provides that when two (2) final determinations have been rendered against a **Contractor** or **Subcontractor** within any consecutive six (6) year period determining that such **Contractor** or **Subcontractor** has willfully failed to pay the prevailing rate of wages or to provide supplements in accordance with the Labor Law and this Article 37.4, whether such failures were concurrent or consecutive and whether or not such final determinations concerning separate public works projects are rendered simultaneously, such **Contractor** or **Subcontractor** shall be ineligible to submit a bid on or be awarded any public works contract with the **City** for a period of five (5) years from the second final determination. If the final determination involves the falsification of payroll records or the kickback of wages or supplements, the **Contractor** or **Subcontractor** shall be ineligible to submit a bid on or be awarded any public works contract with the **City** for a period of five (5) years from the first final determination.

37.4.4(c) Labor Law Section 220, as amended, provides that the **Contractor** or **Subcontractor** found to have violated this Article 37.4 may be directed to make payment of wages or supplements including interest found to be due, and the **Contractor** or **Subcontractor** may be directed to make payment of a further sum asa civil penalty in an amount not exceeding twenty-five (25%) percent of the total amount found to be due.

37.5 The **Contractor** and its **Subcontractors** shall within ten (10) **Days** after mailing of a Noticeof Award or written order, post in prominent and conspicuous places in each and every plant, factory, building, and structure where employees of the **Contractor** and its **Subcontractors** engaged in the performance of this **Contract** are employed, notices furnished by the **City**, in relation to prevailing wages and supplements, minimum wages, and other stipulations contained in Sections 220 and 220-h of the Labor Law, and the **Contractor** and its **Subcontractors** shall continue to keep such notices posted in such prominent and conspicuous places until **Final Acceptance** of the supplies, materials, equipment, or **Work**, labor, or services required to be furnished or rendered under this **Contract**.

37.6 The **Contractor** shall strictly comply with all of the provisions of Articles 37.6.1 through 37.6.5, and provide for all workers, laborers or mechanics in its employ, the following:

37.6.1 Notices Posted At **Site**: Post, in a location designated by the **City**, schedules of prevailing wages and supplements for this **Project**, a copy of all re-determinations of such schedules for the **Project**, the Workers' Compensation **Law** Section 51 notice, all other notices required by **Law** to be posted at the **Site**, the **City** notice that this **Project** is a public works project on which each worker is entitled to receive the prevailing wages and supplements for the occupation at which he or she is working, and all other notices whichthe **City** directs the **Contractor** to post. The **Contractor** shall provide a surface for such notices which is satisfactory to the **City**. The **Contractor** shall maintain and keep current such notices in a legible manner and shall replace any notice or schedule which is damaged, defaced, illegible or removed for any reason. The **Contractor** shall post such notices before commencing any **Work** on the **Site** and shall maintain such notices until all **Work**on the **Site** is complete; and

37.6.2 Daily **Site** Sign-in Sheets: Maintain daily **Site** sign-in sheets, and require that **Subcontractors** maintain daily **Site** sign-in sheets for its employees, which include blank spaces for an employee's name to be both printed and signed, job title, date started and Social Security number, the time the employee began work and the time the employee left

work, until **Final Acceptance** of the supplies, materials, equipment, or **Work**, labor, or services to be furnished or rendered under this **Contract** unless exception is granted by the **Comptroller** upon application by the **Agency**. In the alternative, subject to the approval of the **CCPO**, the **Contractor** and **Subcontractor** may maintain an electronic or biometric sign-in system, which provides the information required by this Article 37.6.2; and

37.6.3 Individual Employee Information Notices: Distribute a notice to each worker, laborer or mechanic employed under this **Contract**, in a form provided by the **Agency**, that this **Project** is a public works project on which each worker, laborer or mechanic is entitled to receive the prevailing rate of wages and supplements for the occupation at which he orshe is working. If the total cost of the **Work** under this **Contract** is at least two hundred fifty thousand ($250,000) dollars, such notice shall also include a statement that each worker, laborer or mechanic must be certified prior to performing any **Work** as having successfully completed a course in construction safety and health approved by the United States Department of Labor's Occupational Safety and Health Administration that is at least ten (10) hours in duration. Such notice shall be distributed to each worker before he or she starts performing any **Work** of this **Contract** and with the first paycheck after July first of each year. "Worker, laborer or mechanic" includes employees of the **Contractor** and all **Subcontractors** and all employees of suppliers entering the **Site**. At the time of distribution, the **Contractor** shall have each worker, laborer or mechanic sign a statement, in a form provided by the **Agency**, certifying that the worker has received the notice required by this Article 37.6.3, which signed statement shall be maintained with the payroll records required by this **Contract**; and

37.6.3(a) The **Contractor** and each **Subcontractor** shall notify each worker, laborer or mechanic employed under this **Contract** in writing of the prevailing rate of wages for their particular job classification. Such notification shall be given to every worker, laborer, and mechanic on their first pay stub and with every pay stub thereafter; and

37.6.4 **Site** Laminated Identification Badges: The **Contractor** shall provide laminated identification badges which include a photograph of the worker's, laborer's or mechanic's face and indicate the worker's, laborer's or mechanic's name, trade, employer's name, and employment starting date (month/day/year). Further, the **Contractor** shall require as acondition of employment on the **Site**, that each and every worker, laborer or mechanic wear the laminated identification badge at all times and that it may be seen by any representative of the **City**. The **Commissioner** may grant a written waiver from the requirement that the laminated identification badge include a photograph if the **Contractor** demonstrates that the identity of an individual wearing a laminated identification badge can be easily verified by another method; and

37.6.5 Language Other Than English Used On **Site**: Provide the **ACCO** notice when three (3) or more employees (worker and/or laborer and/or mechanic) on the **Site**, at any time, speak a language other than English. The **ACCO** will then provide the **Contractor** the notices described in Article 37.6.1 in that language or languages as may be required. The **Contractor** is responsible for all distributions under this Article 37; and

37.6.6 Provision of Records: The **Contractor** and **Subcontractor(s)** shall produce within five (5) **Days** on the **Site** of the **Work** and upon a written order of the **Engineer**, the **Commissioner**, the **ACCO**, the **Agency EAO**, or the **Comptroller,** such records as are required to be kept by this Article 37.6; and

37.6.7 The **Contractor** and **Subcontractor(s)** shall pay employees by check or direct deposit. If this **Contract** is for an amount greater than one million ($1,000,000) dollars, checks issued by the **Contractor** to covered employees shall be generated by a payroll service or automated payroll system (an in-house system may be used if approved by the **Agency**). For any subcontract for an amount greater than seven hundred fifty thousand ($750,000) dollars, checks issued by a **Subcontractor** to covered employees shall be generated by a payroll service or automated payroll system (an in-house system may be usedif approved by the **Agency**); and

37.6.8 The failure of the **Contractor** or **Subcontractor(s)** to comply with the provisions of Articles 37.6.1 through 37.6.7 may result in the **Commissioner** declaring the **Contractor** in default and/or the withholding of payments otherwise due under the **Contract**.

37.7 The **Contractor** and its **Subcontractors** shall keep such employment and payroll records as are required by Section 220 of the Labor Law. The failure of the **Contractor** or **Subcontractor(s)** to comply with the provisions of this Article 37.7 may result in the **Commissioner** declaring the **Contractor** in default and/or the withholding of payments otherwise due under the **Contract.**

37.8 At the time the **Contractor** makes application for each partial payment and for final payment, the **Contractor** shall submit to the **Commissioner** a written payroll certification, in the form provided by this **Contract**, of compliance with the prevailing wage, minimum wage, and other provisions and stipulations required by Labor Law Section 220 and of compliance with the training requirements of Labor Law Section 220-h set forth in Article 35.2. This certification of compliance shall be a condition precedent to payment and no payment shall be made to the **Contractor** unless and until each such certification shall have been submitted to and received by the **Commissioner**.

37.9 This **Contract** is executed by the **Contractor** with the express warranty and representation that the **Contractor** is not disqualified under the provisions of Section 220 of the Labor Law from the award of the **Contract**.

37.10 Any breach or violation of any of the foregoing shall be deemed a breach or violation of a material provision of this **Contract**, and grounds for cancellation thereof by the **City**.

ARTICLE 38. PAYROLL REPORTS

38.1 The **Contractor** and its **Subcontractor(s)** shall maintain on the **Site** during the performanceof the **Work** the original payrolls or transcripts thereof which the **Contractor** and its **Subcontractor(s)** are required to maintain and shall submit such original payrolls or transcripts, subscribed and affirmed by it as true, within thirty (30) **Days** after issuance of its first payroll, and every thirty (30) **Days** thereafter, pursuant to Labor Law Section 220(3-a)(a)(iii). The **Contractor** and **Subcontractor(s)** shall submit such original payrolls or transcripts along with each and every payment requisition. If payment requisitions are not submitted at least once a month, the **Contractor** and its **Subcontractor(s)** shall submit original payrolls and transcripts both along with its payment requisitions and independently of its payment requisitions.

38.2 The **Contractor** shall maintain payrolls or transcripts thereof for six (6) years from the date of completion of the **Work** on this **Contract**. If such payrolls and transcripts are maintained outside of New York City after the completion of the **Work** and their production is required pursuant to this Article 38, the **Contractor** shall produce such records in New York City upon request by the City.

38.3 The **Contractor** and **Subcontractor(s)** shall comply with any written order, direction, or request made by the **Engineer**, the **Commissioner**, the **ACCO**, the **Agency EAO**, the **Agency Labor Law**

Investigator(s), or the **Comptroller**, to provide to the requesting party any of the following information and/or records within five (5) **Days** of such written order, direction, or request:

38.3.1 Such original payrolls or transcripts thereof subscribed and affirmed by it as true and the statements signed by each worker pursuant to this Chapter VIII; and/or

38.3.2 Attendance sheets for each **Day** on which any employee of the **Contractor** and/or any of the **Subcontractor(s)** performed **Work** on the **Site**, which attendance sheet shall be in a form acceptable to the **Agency** and shall provide information acceptable to the **Agency** to identify each such employee; and/or

38.3.3 Any other information to satisfy the **Engineer**, the **Commissioner**, the **ACCO**, the **Agency EAO**, the **Agency Labor Law Investigator(s)** or the **Comptroller**, that this Chapter VIII and the Labor Law, as to the hours of employment and prevailing rates of wages and/or supplemental benefits, are being observed.

38.4 The failure of the **Contractor** or **Subcontractor(s)** to comply with the provisions of Articles 38.1 and/or 38.2 may result in the **Commissioner** declaring the **Contractor** in default and/or the withholding of payments otherwise due under the **Contract**.

ARTICLE 39. DUST HAZARDS

39.1 Should a harmful dust hazard be created in performing the **Work** of this **Contract**, for the elimination of which appliances or methods have been approved by the Board of Standards and Appeals of the City of New York, such appliances and methods shall be installed, maintained, and effectively operated during the continuance of such harmful dust hazard. Failure to comply with this provision after notice shall make this **Contract** voidable at the sole discretion of the **City**.

CHAPTER IX: PARTIAL AND FINAL PAYMENTS

ARTICLE 40. CONTRACT PRICE

40.1 The **City** shall pay, and the **Contractor** agrees to accept, in full consideration for the **Contractor's** performance of the **Work** subject to the terms and conditions hereof, the lump sum priceor unit prices for which this **Contract** was awarded, plus the amount required to be paid for any **Extra Work** ordered by the **Commissioner** under Article 25, less credit for any **Work** omitted pursuant to Article 29.

ARTICLE 41. BID BREAKDOWN ON LUMP SUM

41.1 Within fifteen (15) **Days** after the commencement date specified in the **Notice to Proceed** or **Order to Work**, unless otherwise directed by the **Resident Engineer**, the **Contractor** shall submitto the **Resident Engineer** a breakdown of its bid price, or of lump sums bid for items of the **Contract**, showing the various operations to be performed under the **Contract**, as directed in the progress schedule required under Article 9, and the value of each of such operations, the total of such items to equal the lump sum price bid. Said breakdown must be approved in writing by the **Resident Engineer**.

41.2 No partial payment will be approved until the **Contractor** submits a bid breakdown that is acceptable to the **Resident Engineer**.

41.3 The **Contractor** shall also submit such other information relating to the bid breakdown as directed by the **Resident Engineer**. Thereafter, the breakdown may be used only for checking the **Contractor's** applications for partial payments hereunder, but shall not be binding upon the **City**, the **Commissioner**, or the **Engineer** for any purpose whatsoever.

ARTICLE 42. PARTIAL PAYMENTS

42.1 From time to time as the **Work** progresses satisfactorily, but not more often than once each calendar month (except where the **Commissioner** approves in writing the submission of invoices on a more frequent basis and for invoices relating to **Work** performed pursuant to a change order), the **Contractor** may submit to the **Engineer** a requisition for a partial payment in the prescribed form, which shall contain an estimate of the quantity and the fair value of the **Work** done during the payment period.

42.2 Partial payments may be made for materials, fixtures, and equipment in advance of their actual incorporation in the **Work**, as the **Commissioner** may approve, and upon the terms and conditions set forth in the General Conditions.

42.3 The **Contractor** shall also submit to the **Commissioner** in connection with every application for partial payment a verified statement in the form prescribed by the **Comptroller** setting forth the information required under Labor Law Section 220-a.

42.4 Within thirty (30) **Days** after receipt of a satisfactory payment application, and within sixty (60) **Days** after receipt of a satisfactory payment application in relation to **Work** performed pursuant to a change order, the **Engineer** will prepare and certify, and the **Commissioner** will approve, a voucher for a partial payment in the amount of such approved estimate, less any and all deductions authorized to be made by the **Commissioner** under the terms of this **Contract** or by **Law**.

ARTICLE 43. PROMPT PAYMENT

43.1 The Prompt Payment provisions of the **PPB** Rules in effect at the time of the bid will be applicable to payments made under this **Contract**. The provisions require the payment to the **Contractor** of interest on payments made after the required payment date, except as set forth in the **PPB** Rules.

43.2 The **Contractor** shall submit a proper invoice to receive payment, except where the **Contract** provides that the **Contractor** will be paid at predetermined intervals without having to submit an invoice for each scheduled payment.

43.3 Determination of interest due will be made in accordance with the **PPB** Rules.

43.4 If the **Contractor** is paid interest, the proportionate share(s) of that interest shall be forwarded by the **Contractor** to its **Subcontractor(s)**.

43.5 The **Contractor** shall pay each **Subcontractor** or **Materialman** not later than seven (7) **Days** after receipt of payment out of amounts paid to the **Contractor** by the **City** for **Work** performed by the **Subcontractor** or **Materialman** under this **Contract**.

43.5.1 If **Contractor** fails to make any payment to any **Subcontractor** or **Materialman** within seven (7) **Days** after receipt of payment by the **City** pursuant to this Article 43.5,

then the **Contractor** shall pay interest on amounts due to such **Subcontractor** or **Materialman** at the rate of interest in effect on the date such payment is made by the **Contractor** computed in accordance with Section 756-b (1)(b) of the New York General Business Law. Accrual of interest shall commence on the **Day** immediately following the expiration of the seventh **Day** following receipt of payment by the **Contractor** from the **City** and shall end on the date on which payment is made.

43.6 The **Contractor** shall include in each of its subcontracts a provision requiring each **Subcontractor** to make payment to each of its **Subcontractors** or **Materialmen** for **Work** performed under this **Contract** in the same manner and within the same time period set forth above.

ARTICLE 44. SUBSTANTIAL COMPLETION PAYMENT

44.1 The **Contractor** shall submit with the **Substantial Completion** requisition:

44.1.1 A final verified statement of any pending Article 27 disputes in accordance with the **PPB** Rules and this **Contract** and any and all alleged claims against the **City**, in any way connected with or arising out of this **Contract** (including those as to which details may have been furnished pursuant to Articles 11, 27, 28, and 30) setting forth with respect to each such claim the total amount thereof, the various items of labor and materials included therein, and the alleged value of each item; and if the alleged claim be one for delay, the alleged cause of each such delay, the period or periods of time, giving the dates when the **Contractor** claims the performance of the **Work** or a particular part thereof was delayed,and an itemized statement and breakdown of the amount claimed for each such delay.

44.1.1(a) With respect to each such claim, the **Commissioner**, the **Comptroller** and, in the event of litigation, the **City** Corporation Counsel shall have the same right to inspect, and to make extracts or copies of, the **Contractor's** books, vouchers, records, etc., as is referred to in Articles 11, 27, 28, and 30. Nothing contained in this Article 44.1.1(a) is intended to or shall relieve the **Contractor** from the obligation of complying strictly with Articles 11, 27, 28, and 30. The **Contractor** is warned that unless such claims are completely set forth as herein required, the **Contractor** upon acceptance of the **Substantial Completion** payment pursuant to this Article 44, will have waived any such claims.

44.1.2 A **Final Approved Punch List**.

44.1.3 Where required, a request for an extension of time to achieve **Substantial Completion** or final extension of time.

44.2 The **Commissioner** shall issue a voucher calling for payment of any part or all of the balance due for **Work** performed under the **Contract**, including monies retained under Article 21, less any and all deductions authorized to be made by the **Commissioner**, under this **Contract** or by **Law**, and less twice the amount the **Commissioner** considers necessary to ensure the completion of the balance of the **Work** by the **Contractor**. Such a payment shall be considered a partial and not a final payment. No **Substantial Completion** payment shall be made under this Article 44 where the **Contractor** failed to complete the **Work** within the time fixed for such completion in the Schedule A of the General Conditions, or within the time to which completion may have been extended, until an extension or extensions of time for the completion of **Work** have been acted upon pursuant to Article 13.

44.3 No further partial payments shall be made to the **Contractor** after **Substantial Completion**, except the **Substantial Completion** payment and payment pursuant to any **Contractor's** requisition that were properly filed with the **Commissioner** prior to the date of **Substantial Completion**; however, the **Commissioner** may grant a waiver for further partial payments after the date of **Substantial Completion** to permit payments for change order **Work** and/or release of retainage and deposits pursuant to Articles 21 and 24. Such waiver shall be in writing.

44.4 The **Contractor** acknowledges that nothing contained in this Article 44 is intended to or shall in any way diminish the force and effect of Article 13.

ARTICLE 45. FINAL PAYMENT

45.1 After completion and **Final Acceptance** of the **Work**, the **Contractor** shall submit all required certificates and documents, together with a requisition for the balance claimed to be due under the **Contract**, less the amount authorized to be retained for maintenance under Article 24. Such submission shall be within 90 days of the date of the **Commissioner's** written determination of **Final Acceptance**, or within such additional time as may be granted by the **Commissioner** in writing. If the **Contractor** fails to submit all required certificates and documents within the time allowed, no payment of the balance claimed shall be made to the **Contractor** and the **Contractor** shall be deemed to have forfeited its right to payment of any balance claimed. A verified statement similar to that required in connection with applications for partial payments shall also be submitted to the **Commissioner**.

45.2 Amended Verified Statement of Claims: The **Contractor** shall also submit with the final requisition any amendments to the final verified statement of any pending dispute resolution procedures in accordance with the **PPB** Rules and this **Contract** and any and all alleged claims against the **City**, in any way connected with or arising out of this **Contract** (including those as to which details may have been furnished pursuant to Articles 11, 27, 28, and 30) that have occurred subsequent to **Substantial Completion**, setting forth with respect to each such claim the total amount thereof, the various items of labor and materials included therein, and the alleged value of each such item; and if the alleged claim be one for delay, the alleged cause of each such delay, the period or periods of time, giving the dates when the **Contractor** claims the performance of the **Work** or a particular part thereof was delayed, and an itemized statement and breakdown of the amount claimed for each such delay. With reference to each such claim, the **Commissioner**, the **Comptroller** and, in the event of litigation, the **City** Corporation Counsel shall have the same right to inspect, and to make extracts or copies of, the **Contractor's** books, vouchers, records, etc., as is referred to in Articles 11, 27, 28, and 30. Nothing contained in this Article 45.2, is intended to or shall relieve the **Contractor** from the obligation of complying strictly with Articles 11, 27, 28, and 30. The **Contractor** is warned that unless such claims are completely set forth as herein required, the **Contractor**, upon acceptance of the Final Payment pursuant to Article 46, will have waived any such claims.

45.3 Preparation of Final Voucher: Upon determining the balance due hereunder other than on account of claims, the **Engineer** will prepare and certify, for the Commissioner's approval, a voucher for final payment in that amount less any and all deductions authorized to be made by the **Commissioner** under this **Contract** or by **Law**. In the case of a lump sum **Contract**, the **Commissioner** shall certify the voucher for final payment within thirty (30) **Days** from the date of completion and acceptance of the **Work**, provided all requests for extensions of time have been acted upon.

45.3.1 All prior certificates and vouchers upon which partial payments were made, being merely estimates made to enable the **Contractor** to prosecute the **Work** more advantageously, shall be subject to correction in the final voucher, and the certification of the **Engineer**

thereon and the approval of the **Commissioner** thereof, shall be conditions precedent to the right of the **Contractor** to receive any money hereunder. Such final voucher shall be binding and conclusive upon the **Contractor**.

45.3.2 Payment pursuant to such final voucher, less any deductions authorized to be made by the **Commissioner** under this **Contract** or by **Law**, shall constitute the final payment, and shall be made by the **Comptroller** within thirty (30) **Days** after the filing of such voucher in his/her office.

45.4 The **Contractor** acknowledges that nothing contained in this Article 45 is intended to or shall in any way diminish the force and effect of Article 13.

ARTICLE 46. ACCEPTANCE OF FINAL PAYMENT

46.1 The acceptance by the **Contractor**, or by anyone claiming by or through it, of the final payment, whether such payment be made pursuant to any judgment of any court, or otherwise, shall constitute and operate as a release of the **City** from any and all claims of and liability to the **Contractor** for anything heretofore done or furnished for the **Contractor** relating to or arising out of this **Contract** and the **Work** done hereunder, and for any prior act, neglect or default on the part of the **City** or any of its officials, agents or employees, excepting only a claim against the **City** for the amounts deducted or retained in accordance with the terms and provisions of this **Contract** or by **Law**, and excepting any claims, not otherwise waived, or any pending dispute resolution procedures which are contained in the verified statement filed with the **Contractor's** substantial and final requisitions pursuant to Articles 44and 45.

46.2 The **Contractor** is warned that the execution by it of a release, in connection with the acceptance of the final payment, containing language purporting to reserve claims other than those herein specifically excepted from the operation of this Article 46, or those for amounts deducted by the **Commissioner** from the final requisition or from the final payment as certified by the **Engineer** and approved by the **Commissioner**, shall not be effective to reserve such claims, anything stated to the **Contractor** orally or in writing by any official, agent or employee of the **City** to the contrary notwithstanding.

46.3 Should the **Contractor** refuse to accept the final payment as tendered by the **Comptroller**, it shall constitute a waiver of any right to interest thereon.

46.4 The **Contractor**, however, shall not be barred by this Article 46 from commencing an action for breach of **Contract** to the extent permitted by **Law** and by the terms of the **Contract** for any claims that are contained in the verified statement filed with the **Contractor's** substantial and final requisitions pursuant to Articles 44 and 45 or that arose after submission of the final payment requisition, provided that a detailed and verified statement of claim is served upon the contracting **Agency** and **Comptroller** not later than forty (40) **Days** after the making of such final payment by electronic funds transfer (EFT)or the mailing of such final payment. The statement shall specify the items upon which the claim will be based and any such claim shall be limited to such items.

ARTICLE 47. APPROVAL BY PUBLIC DESIGN COMMISSION

47.1 All works of art, including paintings, mural decorations, stained glass, statues, bas-reliefs, and other sculptures, monuments, fountains, arches, and other structures of a permanent character intendedfor ornament or commemoration, and every design of the same to be used in the performance of this **Contract**, and the design of all bridges, approaches, buildings, gates, fences, lamps, or structures to be erected, pursuant

to the terms of this **Contract**, shall be submitted to the Art Commission, d/b/a the Public Design Commission of the City of New York, and shall be approved by the Public Design Commission prior to the erection or placing in position of the same. The final payment shall not become due or payable under this **Contract** unless and until the Public Design Commission shall certify that the design for the **Work** herein contracted for has been approved by the said Public Design Commission, and that the same has been executed in substantial accordance with the design so approved, pursuant to the provisions of Chapter 37, Section 854 of the **City** Charter, as amended.

CHAPTER X: CONTRACTOR'S DEFAULT

ARTICLE 48. COMMISSIONER'S RIGHT TO DECLARE CONTRACTOR IN DEFAULT

48.1 In addition to those instances specifically referred to in other Articles herein, the **Commissioner** shall have the right to declare the **Contractor** in default of this **Contract** if:

48.1.1 The **Contractor** fails to commence **Work** when notified to do so by the **Commissioner**; or if

48.1.2 The **Contractor** shall abandon the **Work**; or if

48.1.3 The **Contractor** shall refuse to proceed with the **Work** when and as directed by the **Commissioner**; or if

48.1.4 The **Contractor** shall, without just cause, reduce its working force to a number which, if maintained, would be insufficient, in the opinion of the **Commissioner**, to complete the **Work** in accordance with the progress schedule; or if

48.1.5 The **Contractor** shall fail or refuse to increase sufficiently such working force when ordered to do so by the **Commissioner**; or if

48.1.6 The **Contractor** shall sublet, assign, transfer, convert or otherwise dispose of this **Contract** other than as herein specified; or sell or assign a majority interest in the **Contractor**; or if

48.1.7 The **Contractor** fails to secure and maintain all required insurance; or if

48.1.8 A receiver or receivers are appointed to take charge of the **Contractor's** property or affairs; or if

48.1.9 The **Commissioner** shall be of the opinion that the **Contractor** is or has been unnecessarily or unreasonably or willfully delaying the performance and completion of the **Work**, or the award of necessary subcontracts, or the placing of necessary material and equipment orders; or if

48.1.10 The **Commissioner** shall be of the opinion that the **Contractor** is or has been willfully or in bad faith violating any of the provisions of this **Contract**; or if

48.1.11 The **Commissioner** shall be of the opinion that the **Work** cannot be completed within the time herein provided therefor or within the time to which such completion may have been extended; provided, however, that the impossibility of timely completion is, in the

Commissioner's opinion, attributable to conditions within the **Contractor's** control; orif

48.1.12 The **Work** is not completed within the time herein provided therefor or within the time to which the **Contractor** may be entitled to have such completion extended; or if

48.1.13 Any statement or representation of the **Contractor** in the **Contract** or in any document submitted by the **Contractor** with respect to the **Work**, the **Project**, or the **Contract** (or for purposes of securing the **Contract**) was untrue or incorrect when made; or if

48.1.14 The **Contractor** or any of its officers, directors, partners, five (5%) percent shareholders, principals, or other persons substantially involved in its activities, commits any of the acts or omissions specified as the grounds for debarment in the **PPB** Rules.

48.2 Before the **Commissioner** shall exercise his/her right to declare the **Contractor** in default, the **Commissioner** shall give the **Contractor** an opportunity to be heard, upon not less than two (2) **Days**' notice.

ARTICLE 49. EXERCISE OF THE RIGHT TO DECLARE DEFAULT

49.1 The right to declare the **Contractor** in default for any of the grounds specified or referred to in Article 48 shall be exercised by sending the **Contractor** a notice, signed by the **Commissioner**, setting forth the ground or grounds upon which such default is declared (hereinafter referred to as a "Notice of Default").

49.2 The **Commissioner's** determination that the **Contractor** is in default shall be conclusive, final, and binding on the parties and such a finding shall preclude the **Contractor** from commencing a plenary action for any damages relating to the **Contract**. If the **Contractor** protests the determination of the **Commissioner**, the **Contractor** may commence an action in a court of competent jurisdiction of the State of New York under Article 78 of the New York Civil Practice Law and Rules.

ARTICLE 50. QUITTING THE SITE

50.1 Upon receipt of such notice the **Contractor** shall immediately discontinue all further operations under this **Contract** and shall immediately quit the **Site**, leaving untouched all plant, materials, equipment, tools, and supplies then on the **Site**.

ARTICLE 51. COMPLETION OF THE WORK

51.1 The **Commissioner**, after declaring the **Contractor** in default, may then have the **Work** completed by such means and in such manner, by contract with or without public letting, or otherwise, as he/she may deem advisable, utilizing for such purpose such of the **Contractor's** plant, materials, equipment, tools, and supplies remaining on the **Site**, and also such **Subcontractors**, as he/she may deem advisable.

51.2 After such completion, the **Commissioner** shall make a certificate stating the expense incurred in such completion, which shall include the cost of re-letting and also the total amount of liquidated damages (at the rate provided for in the **Contract**) from the date when the **Work** should have been completed by the **Contractor** in accordance with the terms hereof to the date of actual completion of the **Work**. Such certificate shall be binding and conclusive upon the **Contractor**, its sureties, and any person claiming under the **Contractor**, as to the amount thereof.

51.3 The expense of such completion, including any and all related and incidental costs, as so certified by the **Commissioner**, and any liquidated damages assessed against the **Contractor**, shall be charged against and deducted out of monies which are earned by the **Contractor** prior to the date of default. Should the expense of such completion, as certified by the **Commissioner**, exceed the total sum which would have been payable under the **Contract** if it had been completed by the **Contractor**, any excess shall be paid by the **Contractor**.

ARTICLE 52. PARTIAL DEFAULT

52.1 In case the **Commissioner** shall declare the **Contractor** in default as to a part of the **Work** only, the **Contractor** shall discontinue such part, shall continue performing the remainder of the **Work**in strict conformity with the terms of this **Contract**, and shall in no way hinder or interfere with any **Other Contractor(s)** or persons whom the **Commissioner** may engage to complete the **Work** as to which the **Contractor** was declared in default.

52.2 The provisions of this Chapter relating to declaring the **Contractor** in default as to the entire **Work** shall be equally applicable to a declaration of partial default, except that the **Commissioner** shallbe entitled to utilize for completion of the part of the **Work** as to which the **Contractor** was declared in default only such plant, materials, equipment, tools, and supplies as had been previously used by the **Contractor** on such part.

ARTICLE 53. PERFORMANCE OF UNCOMPLETED WORK

53.1 In completing the whole or any part of the **Work** under the provisions of this Chapter X, the **Commissioner** shall have the power to depart from or change or vary the terms and provisions of this **Contract**, provided, however, that such departure, change or variation is made for the purpose ofreducing the time or expense of such completion. Such departure, change or variation, even to the extent of accepting a lesser or different performance, shall not affect the conclusiveness of the **Commissioner's** certificate of the cost of completion referred to in Article 51, nor shall it constitute a defense to an action to recover the amount by which such certificate exceeds the amount which would have been payable to the **Contractor** hereunder but for its default.

ARTICLE 54. OTHER REMEDIES

54.1 In addition to the right to declare the **Contractor** in default pursuant to this Chapter X, the **Commissioner** shall have the absolute right, in his/her sole discretion and without a hearing, to complete or cause to be completed in the same manner as described in Articles 51 and 53, any or all unsatisfactory or uncompleted punch list **Work** that remains after the completion date specified in the **Final Approved Punch List**. A written notice of the exercise of this right shall be sent to the **Contractor** who shall immediately quit the **Site** in accordance with the provisions of Article 50.

54.2 The expense of completion permitted under Article 54.1, including any and all related and incidental costs, as so certified by the **Commissioner**, shall be charged against and deducted out of monies which have been earned by the **Contractor** prior to the date of the exercise of the right set forthin Article 54.1; the balance of such monies, if any, subject to the other provisions of this **Contract**, to be paid to the **Contractor** without interest after such completion. Should the expense of such completion,as certified by

the **Commissioner**, exceed the total sum which would have been payable under the **Contract** if it had been completed by the **Contractor**, any excess shall be paid by the **Contractor**.

54.3 The previous provisions of this Chapter X shall be in addition to any and all other remedies available under **Law** or in equity.

54.4 The exercise by the **City** of any remedy set forth herein shall not be deemed a waiver by the **City** of any other legal or equitable remedy contained in this **Contract** or provided under **Law**.

CHAPTER XI: MISCELLANEOUS PROVISIONS

ARTICLE 55. CONTRACTOR'S WARRANTIES

55.1 In consideration of, and to induce, the award of this **Contract** to the **Contractor**, the **Contractor** represents and warrants:

55.1.1 That it is financially solvent, sufficiently experienced and competent to performthe **Work**; and

55.1.2 That the facts stated in its bid and the information given by it pursuant to the Information for Bidders is true and correct in all respects; and

55.1.3 That it has read and complied with all requirements set forth in the **Contract**.

ARTICLE 56. CLAIMS AND ACTIONS THEREON

56.1 Any claim, that is not subject to dispute resolution under the **PPB** Rules or this **Contract**, against the **City** for damages for breach of **Contract** shall not be made or asserted in any action, unless the **Contractor** shall have strictly complied with all requirements relating to the giving of notice and of information with respect to such claims, as herein before provided.

56.2 Nor shall any action be instituted or maintained on any such claims unless such action is commenced within six (6) months after **Substantial Completion**; except that:

56.2.1 Any claims arising out of events occurring after **Substantial Completion** and before **Final Acceptance** of the **Work** shall be asserted within six (6) months of **Final Acceptance** of the **Work**;

56.2.2 If the **Commissioner** exercises his/her right to complete or cause to complete any or all unsatisfactory or uncompleted punch list **Work** that remains after the completion date specified in the **Final Approved Punch List** pursuant to Article 54, any such action shall be commenced within six (6) months from the date the **Commissioner** notifies the **Contractor** in writing that he/she has exercised such right. Any claims for monies deducted, retained or withheld under the provisions of this **Contract** shall be assertedwithin six (6) months after the date when such monies otherwise become due and payable hereunder; and

56.2.3 If the **Commissioner** exercises his/her right to terminate the **Contract** pursuant to Article 64, any such action shall be commenced within six (6) months of the date the **Commissioner** exercises said right.

ARTICLE 57. INFRINGEMENT

57.1 The **Contractor** shall be solely responsible for and shall defend, indemnify, and hold the **City** harmless from any and all claims (even if the allegations of the lawsuit are without merit) and judgments for damages and from costs and expenses to which the **City** may be subject to or which it may suffer or incur allegedly arising out of or in connection with any infringement by the **Contractor** of any copyright, trade secrets, trademark or patent rights or any other property or personal right of any third party by the **Contractor** and/or its **Subcontractors** in the performance or completion of the **Work**. Insofar as thefacts or **Law** relating to any claim would preclude the **City** from being completely indemnified by the **Contractor**, the **City** shall be partially indemnified by the **Contractor** to the fullest extent permitted by **Law**.

ARTICLE 58. NO CLAIM AGAINST OFFICIALS, AGENTS OR EMPLOYEES

58.1 No claim whatsoever shall be made by the **Contractor** against any official, agent or employeeof the **City** for, or on account of, anything done or omitted to be done in connection with this **Contract**.

ARTICLE 59. SERVICE OF NOTICES

59.1 The **Contractor** hereby designates the business address, fax number, and email addressspecified in its bid, as the place where all notices, directions or other communications to the **Contractor** may be delivered, or to which they may be mailed. Any notice, direction, or communication from either party to the other shall be in writing and shall be deemed to have been given when (i) delivered personally; (ii) sent by certified mail, return receipt requested; (iii) delivered by overnight or same day courier service in a properly addressed envelope with confirmation; or (iv) sent by fax or email and,unless receipt of the fax or e-mail is acknowledged by the recipient by fax or e-mail, deposited in a post office box regularly maintained by the United States Postal Service in a properly addressed, postage pre- paid envelope.

59.2 **Contractor's** notice address, email address, or fax number may be changed at any time by an instrument in writing, executed and acknowledged by the **Contractor**, and delivered to the**Commissioner**.

59.3 Nothing herein contained shall, however, be deemed to preclude or render inoperative the service of any notice, direction or other communication upon the **Contractor** personally, or, if the **Contractor** is a corporation, upon any officer thereof.

ARTICLE 60. UNLAWFUL PROVISIONS DEEMED STRICKEN FROM CONTRACT

60.1 If this **Contract** contains any unlawful provision not an essential part of the **Contract** and which shall not appear to have been a controlling or material inducement to the making thereof, the same shall be deemed of no effect and shall, upon notice by either party, be deemed stricken from the **Contract** without affecting the binding force of the remainder.

ARTICLE 61. ALL LEGAL PROVISIONS DEEMED INCLUDED

61.1 It is the intent and understanding of the parties to this **Contract** that each and every provision of **Law** required to be inserted in this **Contract** shall be and is inserted herein. Furthermore, it is hereby stipulated that every such provision is to be deemed to be inserted herein, and if, through mistake or otherwise, any such provision is not inserted, or is not inserted in correct form, then this **Contract** shall forthwith upon the application of either party be amended by such insertion so as to comply strictly with the **Law** and without prejudice to the rights of either party hereunder.

ARTICLE 62. TAX EXEMPTION

62.1 The **City** is exempt from payment of Federal, State, and local taxes, including sales and compensating use taxes of the State of New York and its cities and counties on all tangible personal property sold to the **City** pursuant to the provisions of this **Contract**. These taxes are not to be included in bids. However, this exemption does not apply to tools, machinery, equipment or other property leased by or to the **Contractor**, **Subcontractor** or **Materialman** or to tangible personal property which, even though it is consumed, is not incorporated into the completed **Work** (consumable supplies) and tangible personal property that the **Contractor** is required to remove from the **Site** during or upon completion of the **Work**. The **Contractor** and its **Subcontractors** and **Materialmen** shall be responsible for and pay any and all applicable taxes, including sales and compensating use taxes, on such leased tools, machinery, equipment or other property and upon all such consumable supplies and tangible personal property that the **Contractor** is required to remove from the **Site** during or upon completion of the **Work**.

62.2 The **Contractor** agrees to sell and the **City** agrees to purchase all tangible personal property, other than consumable supplies and other tangible personal property that the **Contractor** is required to remove from the **Site** during or upon completion of the **Work**, that is required, necessary or proper for or incidental to the construction of the **Project** covered by this **Contract**. The sum paid under this **Contract** for such tangible personal property shall be in full payment and consideration for the sale of such tangible personal property.

> 62.2.1 The **Contractor** agrees to construct the **Project** and to perform all **Work**, labor and services rendered, necessary, proper or incidental thereto for the sum shown in the bid forthe performance of such **Work**, labor, and services, and the sum so paid pursuant to this **Contract** for such **Work**, labor, and services, shall be in full consideration for the performance by the **Contractor** of all its duties and obligations under this **Contract** in connection with said **Work,** labor, and services.

62.3 20 NYCRR Section 541.3(d) provides that a **Contractor**'s purchases of tangible personal property that is either incorporated into real property owned by a governmental entity or purchased for and sold to a governmental entity are exempt from sales and use tax. The **City** shall not pay sales tax for any such tangible personal property that it purchases from the **Contractor** pursuant to the **Contract.** With respect to such tangible personal property, the **Contractor**, at the request of the **City**, shall furnish to the **City** such bills of sale and other instruments as may be required by the **City**, properly executed, acknowledged and delivered assuring to the **City** title to such tangible personal property, free of liens and/or encumbrances, and the **Contractor** shall mark or otherwise identify all such tangible personal property as the property of the **City**.

62.4 Title to all tangible personal property to be sold by the **Contractor** to the **City** pursuant to the provisions of the **Contract** shall immediately vest in and become the sole property of the **City** upon delivery of such tangible personal property to the **Site**. Notwithstanding such transfer of title, the **Contractor** shall

have the full and continuing responsibility to install such tangible personal property in accordance with the provisions of this **Contract**, protect it, maintain it in a proper condition and forthwith repair, replace and make good any damage thereto, theft or disappearance thereof, and furnish additional tangible personal property in place of any that may be lost, stolen or rendered unusable, without cost to the **City**, until such time as the **Work** covered by the **Contract** is fully accepted by the **City**. Such transfer of title shall in no way affect any of the **Contractor's** obligations hereunder. In the event that, after title has passed to the **City**, any of the tangible personal property is rejected as being defective or otherwise unsatisfactory, title to all such tangible personal property shall be deemed to have been transferred back to the **Contractor**.

62.5 The purchase by **Subcontractors** or **Materialmen** of tangible personal property to be sold hereunder shall be a purchase or procurement for resale to the **Contractor** (either directly or through other **Subcontractors**) and therefore not subject to the aforesaid sales and compensating use taxes, provided that the subcontracts and purchase agreements provide for the resale of such tangible personal property and that such subcontracts and purchase agreements are in a form similar to this **Contract** with respect to the separation of the sale of consumable supplies and tangible personal property that the **Contractor** is required to remove from the **Site** during or upon completion of the **Work** from the **Work** and labor, services, and any other matters to be provided, and provided further that the subcontracts and purchase agreements provide separate prices for tangible personal property and all other services and matters. Such separation shall actually be followed in practice, including the separation of payments for tangible personal property from the payments for other **Work** and labor and other things to be provided.

62.6 The **Contractor** and its **Subcontractors** and **Materialmen** shall furnish a **Contractor** Exempt Purchase Certificate to all persons, firms or corporations from which they purchase tangible personal property for the performance of the **Work** covered by this **Contract**.

62.7 In the event any of the provisions of this Article 62 shall be deemed to be in conflict with any other provisions of this **Contract** or create any ambiguity, then the provisions of this Article 62 shall control.

ARTICLE 63. INVESTIGATION(S) CLAUSE

63.1 The parties to this **Contract** agree to cooperate fully and faithfully with any investigation, audit or inquiry conducted by a United States, a State of New York (State) or a **City** governmental agency or authority that is empowered directly or by designation to compel the attendance of witnesses and to examine witnesses under oath, or conducted by the Inspector General of a governmental agency that is a party in interest to the transaction, submitted bid, submitted proposal, contract, lease, permit or license that is the subject of the investigation, audit or inquiry.

63.2 If any person who has been advised that his/her statement, and any information from such statement, will not be used against him/her in any subsequent criminal proceeding refuses to testify before a grand jury or other governmental agency or authority empowered directly or by designation to compel the attendance of witnesses and to examine witnesses under oath concerning the award of or performance under any transaction, agreement, lease, permit, contract, or license entered into with the **City**, the State, or any political subdivision or public authority thereof, or the Port Authority of NewYork and New Jersey, or any local development corporation within the **City**, or any public benefit corporation organized under the **Laws** of the State of New York, or;

63.3 If any person refuses to testify for a reason other than the assertion of his/her privilege against self incrimination in an investigation, audit or inquiry conducted by a **City** or State governmental agency or authority empowered directly or by designation to compel the attendance of witnesses and to take testimony under oath, or by the Inspector General of the governmental agency that is a party in interestin, and is

seeking testimony concerning the award of, or performance under any transaction, agreement, lease, permit, contract, or license entered into with the **City**, the State, or any political subdivision thereof or any local development corporation within the **City**, then;

63.4 The **Commissioner** whose **Agency** is a party in interest to the transaction, submitted bid, submitted proposal, contract, lease, permit, or license shall convene a hearing, upon not less than five (5) **Days**' written notice to the parties involved to determine if any penalties should attach for the failure of a person to testify.

63.5 If any non-governmental party to the hearing requests an adjournment, the **Commissioner** who convened the hearing may, upon granting the adjournment, suspend any contract, lease, permit, or license, pending the final determination pursuant to Article 63.7 without the **City** incurring any penalty or damages for delay or otherwise.

63.6 The penalties which may attach after a final determination by the **Commissioner** may include but shall not exceed:

63.6.1 The disqualification for a period not to exceed five (5) years from the date of an adverse determination for any person, or any entity of which such person was a member at the time the testimony was sought, from submitting bids for, or transacting business with, or entering into or obtaining any contract, lease, permit or license with or from the **City**; and/or

63.6.2 The cancellation or termination of any and all such existing **City** contracts, leases, permits or licenses that the refusal to testify concerns and that have not been assigned as permitted under this **Contract**, nor the proceeds of which pledged, to an unaffiliated and unrelated institutional lender for fair value prior to the issuance of the notice scheduling the hearing, without the **City** incurring any penalty or damages on account of such cancellation or termination; monies lawfully due for goods delivered, work done, rentals, or fees accrued prior to the cancellation or termination shall be paid by the **City**.

63.7 The **Commissioner** shall consider and address in reaching his/her determination and inassessing an appropriate penalty the factors in Articles 63.7.1 and 63.7.2. The **Commissioner** may also consider, if relevant and appropriate, the criteria established in Articles 63.7.3 and 63.7.4, in addition to any other information which may be relevant and appropriate:

63.7.1 The party's good faith endeavors or lack thereof to cooperate fully and faithfully with any governmental investigation or audit, including but not limited to the discipline, discharge, or disassociation of any person failing to testify, the production of accurate and complete books and records, and the forthcoming testimony of all other members, agents, assignees or fiduciaries whose testimony is sought.

63.7.2 The relationship of the person who refused to testify to any entity that is a party tothe hearing, including but not limited to, whether the person whose testimony is sought has an ownership interest in the entity and/or the degree of authority and responsibility theperson has within the entity.

63.7.3 The nexus of the testimony sought to the subject entity and its contracts, leases, permits or licenses with the **City**.

63.7.4 The effect a penalty may have on an unaffiliated and unrelated party or entity thathas a significant interest in an entity subject to penalties under Article 63.6, provided that the party

or entity has given actual notice to the **Commissioner** upon the acquisition of the interest, or at the hearing called for in Article 63.4, gives notice and proves that such interest was previously acquired. Under either circumstance the party or entity shall present evidence at the hearing demonstrating the potential adverse impact a penalty will have on such person or entity.

63.8 Definitions:

63.8.1 The term "license" or "permit" as used in this Article 63 shall be defined as a license, permit, franchise or concession not granted as a matter of right.

63.8.2 The term "person" as used in this Article 63 shall be defined as any natural person doing business alone or associated with another person or entity as a partner, director, officer, principal or employee.

63.8.3 The term "entity" as used in this Article 63 shall be defined as any firm, partnership, corporation, association, joint venture, or person that receives monies, benefits, licenses, leases, or permits from or through the **City** or otherwise transacts business with the **City**.

63.8.4 The term "member" as used in this Article 63 shall be defined as any person associated with another person or entity as a partner, director, officer, principal or employee.

63.9 In addition to and notwithstanding any other provision of this **Contract**, the **Commissioner** may in his/her sole discretion terminate this **Contract** upon not less than three (3) **Days'** written notice in the event the **Contractor** fails to promptly report in writing to the **Commissioner** of the Department of Investigations ("DOI") of the **City** any solicitation of money, goods, requests for future employment or other benefit or thing of value, by or on behalf of any employee of the **City** or other person, firm, corporation or entity for any purpose which may be related to the procurement or obtaining of this **Contract** by the **Contractor**, or affecting the performance of this **Contract**.

ARTICLE 64. TERMINATION BY THE CITY

64.1 In addition to termination pursuant to any other article of this **Contract**, the **Commissioner** may, at any time, terminate this **Contract** by written notice to the **Contractor**. In the event of termination, the **Contractor** shall, upon receipt of such notice, unless otherwise directed by the **Commissioner**:

64.1.1 Stop **Work** on the date specified in the notice;

64.1.2 Take such action as may be necessary for the protection and preservation of the **City's** materials and property;

64.1.3 Cancel all cancelable orders for material and equipment;

64.1.4 Assign to the **City** and deliver to the **Site** or another location designated by the **Commissioner**, any non-cancelable orders for material and equipment that is not capable of use except in the performance of this **Contract** and has been specifically fabricated for the sole purpose of this **Contract** and not incorporated in the **Work**;

64.1.5 Take no action which will increase the amounts payable by the **City** under this
64.1.5 **Contract**.

64.2 In the event of termination by the **City** pursuant to this Article 64, payment to the **Contractor** shall be in accordance with Articles 64.2.1, 64.2.2 or 64.2.3, to the extent that each respective article applies.

64.2.1 Lump Sum Contracts or Items: On all lump sum **Contracts**, or on lump sum items in a **Contract**, the **City** will pay the **Contractor** the sum of the amounts described in Articles 64.2.1(a) and 64.2.1(b), less all payments previously made pursuant to this **Contract**. On lump sum **Contracts** only, the **City** will also pay the **Contractor** an additional sum as provided in Article 64.2.1(c).

64.2.1(a) For **Work** completed prior to the notice of termination, the **Contractor** shall be paid a pro rata portion of the lump sum bid amount, plus approved change orders, based upon the percent completion of the **Work**, as determined by the **Commissioner**. For the purpose of determining the pro rata portion of the lump sum bid amount to which the **Contractor** is entitled, the bid breakdown submitted in accordance with Article 41 shall be considered, but shall not be dispositive. The **Commissioner's** determination hereunder shall be final, binding, and conclusive.

64.2.1(b) For non-cancelable material and equipment that is not capable of use except in the performance of this **Contract** and has been specifically fabricated for the sole purpose of this **Contract**, but not yet incorporated in the **Work**, the **Contractor** shall be paid the lesser of the following, less salvage value:

64.2.1(b)(i) The Direct Cost, as defined in Article 64.2.4; or

64.2.1(b)(ii) The fair and reasonable value, if less than Direct Cost, of such material and equipment, plus necessary and reasonable delivery costs.

64.2.1(b)(iii) In addition, the **Contractor** shall be paid five (5%) percent of the amount described in Article 64.2.1(b)(i) or Article 64.2.1(b)(ii), whichever applies.

64.2.1(c) Except as otherwise provided in Article 64.2.1(d), on all lump sum **Contracts**, the **Contractor** shall be paid the percentage indicated below applied tothe difference between the total lump sum bid amount and the total of all payments made prior to the notice of termination plus all payments allowed pursuant to Articles 64.2.1(a) and 64.2.1(b):

64.2.1(c)(i) Five (5%) percent of the first five million ($5,000,000) dollars; and

64.2.1(c)(ii) Three (3%) percent of any amount between five million ($5,000,000) dollars and fifteen million ($15,000,000) dollars; plus

64.2.1(c)(iii) One (1%) percent of any amount over fifteen million ($15,000,000) dollars.

64.2.1(d) In the event the **City** terminates a lump sum **Contract** pursuant to this Article 64 within ninety (90) **Days** after registration of the **Contract** with the **Comptroller**, the **Contractor** shall be paid one (1%) percent of the difference between the lump sum bid amount and the total of all payments made pursuant to this Article 64.2.

64.2.2 Unit Price Contracts or Items: On all unit price **Contracts**, or on unit price items ina

Contract, the **City** will pay the **Contractor** the sum of the amounts described in Articles 64.2.2(a) and 64.2.2(b), less all payments previously made pursuant to this **Contract**:

64.2.2(a) For all completed units, the unit price stated in the **Contract**, and

64.2.2(b) For units that have been ordered but are only partially completed, the **Contractor** will be paid:

64.2.2(b)(i) A pro rata portion of the unit price stated in the **Contract** based upon the percent completion of the unit and

64.2.2(b)(ii) For non-cancelable material and equipment, payment willbe made pursuant to Article 64.2.1(b).

64.2.3 Time and Materials Contracts or Items Based on Time and Material Records: On all **Contracts** or items in a **Contract** where payment for the **Work** is based on time and material records, the **Contractor** shall be paid in accordance with Article 26, less all payments previously made pursuant to this **Contract**.

64.2.4 Direct Costs: Direct Costs as used in this Article 64.2 shall mean:

64.2.4(a) The actual purchase price of material and equipment, plus necessary and reasonable delivery costs,

64.2.4(b) The actual cost of labor involved in construction and installation at the **Site**, and

64.2.4(c) The actual cost of necessary bonds and insurance purchased pursuant to requirements of this **Contract** less any amounts that have been or should be refunded by the **Contractor's** sureties or insurance carriers.

64.2.4(d) Direct Costs shall not include overhead.

64.3 In no event shall any payments under this Article 64 exceed the **Contract** price for such items.

64.4 All payments pursuant to Article 64 shall be in the nature of liquidated damages and shall be accepted by the **Contractor** in full satisfaction of all claims against the **City**.

64.5 The **City** may deduct or set off against any sums due and payable pursuant to this Article 64, any deductions authorized by this **Contract** or by **Law** (including but not limited to liquidated damages) and any claims it may have against the **Contractor**. The **City's** exercise of the right to terminate the **Contract** pursuant to this Article 64 shall not impair or otherwise effect the **City's** right to assert any claims it may have against the **Contractor** in a plenary action.

64.6 Where the **Work** covered by the **Contract** has been substantially completed, as determined in writing by the **Commissioner**, termination of the **Work** shall be handled as an omission of **Work** pursuant to Articles 29 and 33, in which case a change order will be issued to reflect an appropriate reduction in the **Contract** sum, or if the amount is determined after final payment, such amount shall be paid by the **Contractor**.

ARTICLE 65. CHOICE OF LAW, CONSENT TO JURISDICTION AND VENUE

65.1 This **Contract** shall be deemed to be executed in the **City** regardless of the domicile of the **Contractor**, and shall be governed by and construed in accordance with the **Laws** of the State of New York and the **Laws** of the United States, where applicable.

65.2 The parties agree that any and all claims asserted against the **City** arising under this **Contract** or related thereto shall be heard and determined in the courts of the State of New York ("New York State Courts") located in the **City** and County of New York. To effect this **Contract** and intent, the **Contractor** agrees:

65.2.1 If the **City** initiates any action against the **Contractor** in Federal court or in a New York State Court, service of process may be made on the **Contractor** either in person, wherever such **Contractor** may be found, or by registered mail addressed to the **Contractor** at its address as set forth in this **Contract**, or to such other address as the **Contractor** may provide to the **City** in writing; and

65.2.2 With respect to any action between the **City** and the **Contractor** in a New York State Court, the **Contractor** hereby expressly waives and relinquishes any rights it might otherwise have:

65.2.2(a) To move to dismiss on grounds of forum non conveniens;

65.2.2(b) To remove to Federal Court; and

65.2.2(c) To move for a change of venue to a New York State Court outside New York County.

65.2.3 With respect to any action brought by the **City** against the **Contractor** in a Federal Court located in the **City**, the **Contractor** expressly waives and relinquishes any right it might otherwise have to move to transfer the action to a Federal Court outside the **City**.

65.2.4 If the **Contractor** commences any action against the **City** in a court located other than in the **City** and County of New York, upon request of the **City**, the **Contractor** shall either consent to a transfer of the action to a New York State Court of competent jurisdiction located in the **City** and County of New York or, if the Court where the action is initially brought will not or cannot transfer the action, the **Contractor** shall consent to dismiss such action without prejudice and may thereafter reinstate the action in a New York State Court of competent jurisdiction in New York County.

65.3 If any provision(s) of this Article 65 is held unenforceable for any reason, each and all other provision(s) shall nevertheless remain in full force and effect.

ARTICLE 66. PARTICIPATION IN AN INTERNATIONAL BOYCOTT

66.1 The **Contractor** agrees that neither the **Contractor** nor any substantially owned affiliated company is participating or shall participate in an international boycott in violation of the provisions ofthe Federal Export Administration Act of 1979, as amended, or the regulations of the United States Department of Commerce (Commerce Department) promulgated thereunder.

66.2 Upon the final determination by the Commerce Department or any other agency of the United States as to, or conviction of the **Contractor** or a substantially-owned affiliated company thereof for participation in an international boycott in violation of the provisions of the Export Administration Act of 1979, as amended, or the regulations promulgated thereunder, the **Comptroller** may, at his/her option, render forfeit and void this **Contract**.

66.3 The **Contractor** shall comply in all respects, with the provisions of Section 6-114 of the Administrative Code and the rules and regulations issued by the **Comptroller** thereunder.

ARTICLE 67. LOCALLY BASED ENTERPRISE PROGRAM

67.1 This **Contract** is subject to the requirements of Section 6-108.1 of the Administrative Code and regulations promulgated thereunder. No construction contract shall be awarded unless and until these requirements have been complied with in their entirety; however, compliance with this Article 67 is not required if the Agency sets Subcontractor Participation Goals for Minority- and Women-Owned Business Enterprises (M/WBEs).

67.2 Unless specifically waived by the **Commissioner** with the approval of the Division of Economic and Financial Opportunity of the **City** Department of Business Services, if any portion of the **Contract** is subcontracted, not less than ten (10%) percent of the total dollar amount of the **Contract** shall be awarded to locally based enterprises (LBEs); except that where less than ten (10%) percent of the total dollar amount of the **Contract** is subcontracted, such lesser percentage shall be so awarded.

67.3 The **Contractor** shall not require performance and payment bonds from LBE **Subcontractors**.

67.4 If the **Contractor** has indicated prior to award that no **Work** will be subcontracted, no **Work** shall be subcontracted without the prior approval of the **Commissioner**, which shall be granted only ifthe **Contractor** makes a good faith effort beginning at least six (6) weeks before the **Work** is to be performed to obtain LBE **Subcontractors** to perform the **Work**.

67.5 If the **Contractor** has not identified sufficient LBE **Subcontractors** prior to award, it shall sign a letter of compliance stating that it complies with Section 6-108.1 of the Administrative Code, recognizes that achieving the LBE requirement is a condition of its **Contract**, and shall submit documentation demonstrating its good faith efforts to obtain LBEs. After award, the **Contractor** shall begin to solicit LBE's to perform subcontracted **Work** at least six (6) weeks before the date such **Work**is to be performed and shall demonstrate that a good faith effort has been made to obtain LBEs on each subcontract until it meets the required percentage.

67.6 Failure of the **Contractor** to comply with the requirements of Section 6-108.1 of the Administrative Code and the regulations promulgated thereunder shall constitute a material breach of this **Contract**. Remedy for such breach may include the imposition of any or all of the following sanctions:

67.6.1 Reducing the **Contractor's** compensation by an amount equal to the dollar value ofthe percentage of the LBE subcontracting requirement not complied with;

67.6.2 Declaring the **Contractor** in default;

67.6.3 If the **Contractor** is an LBE, de-certifying and declaring the **Contractor** ineligibleto participate in the LBE program for a period of up to three (3) years.

ARTICLE 68. ANTITRUST

68.1 The **Contractor** hereby assigns, sells, and transfers to the **City** all right, title, and interest in and to any claims and causes of action arising under the antitrust **Laws** of New York State or of the United States relating to the particular goods or services purchased or procured by the **City** under this **Contract**.

ARTICLE 69. MacBRIDE PRINCIPLES PROVISIONS

69.1 Notice To All Prospective **Contractors**:

69.1.1 Local Law No. 34 of 1991 became effective on September 10, 1991 and added Section 6-115.1 of the Administrative Code. The local **Law** provides for certain restrictions on **City Contracts** to express the opposition of the people of the **City** to employment discrimination practices in Northern Ireland to promote freedom of work-place opportunity.

69.1.2 Pursuant to Section 6-115.1, prospective **Contractors** for **Contracts** to provide goods or services involving an expenditure of an amount greater than ten thousand ($10,000.) dollars, or for construction involving an amount greater than fifteen thousand ($15,000.) dollars, are asked to sign a rider in which they covenant and represent, as a material condition of their **Contract**, that any business operations in Northern Ireland conducted by the **Contractor** and any individual or legal entity in which the **Contractor** holds a ten (10%) percent or greater ownership interest in the **Contractor** will be conducted in accordance with the MacBride Principles of nondiscrimination in employment.

69.1.3 Prospective **Contractors** are not required to agree to these conditions. However, in the case of **Contracts** let by competitive sealed bidding, whenever the lowest responsible bidder has not agreed to stipulate to the conditions set forth in this notice and another bidder who has agreed to stipulate to such conditions has submitted a bid within five (5%) percent of the lowest responsible bid for a **Contract** to supply goods, services or contraction of comparable quality, the **Agency** shall refer such bids to the Mayor, the Speaker or other officials, as appropriate, who may determine, in accordance with applicable **Law**, that it is in the best interest of the **City** that the **Contract** be awarded to other than the lowest responsible pursuant to Section 313(b)(2) of the **City** Charter.

69.1.4 In the case of **Contracts** let by other than competitive sealed bidding, if a prospective **Contractor** does not agree to these conditions, no **Agency**, elected official or the **City** Council shall award the **Contract** to that bidder unless the **Agency** seeking to use the goods, services or construction certifies in writing that the **Contract** is necessary for the **Agency** to perform its functions and there is no other responsible **Contractor** who will supply goods, services or construction of comparable quality at a comparable price.

69.2 In accordance with Section 6-115.1 of the Administrative Code, the **Contractor** stipulates that such **Contractor** and any individual or legal entity in which the **Contractor** holds a ten (10%) percent or greater ownership interest in the **Contractor** either:

69.2.1 Have no business operations in Northern Ireland, or

69.2.2 Shall take lawful steps in good faith to conduct any business operations they have in

Northern Ireland in accordance with the MacBride Principles, and shall permit independent monitoring of their compliance with such principles.

69.3 For purposes of this Article, the following terms shall have the following meanings:

69.3.1 "MacBride Principles" shall mean those principles relating to nondiscrimination in employment and freedom of work-place opportunity which require employers doing business in Northern Ireland to:

69.3.1(a) increase the representation of individuals from under-represented religious groups in the workforce, including managerial, supervisory, administrative, clerical and technical jobs;

69.3.1(b) take steps to promote adequate security for the protection of employees from under-represented religious groups both at the work-place and while traveling toand from **Work**;

69.3.1(c) ban provocative religious or political emblems from the workplace;

69.3.1(d) publicly advertise all job openings and make special recruitment efforts to attract applicants from under-represented religious groups;

69.3.1(e) establish layoff, recall, and termination procedures which do not in practice favor a particular religious group;

69.3.1(f) abolish all job reservations, apprenticeship restrictions and different employment criteria which discriminate on the basis of religion;

69.3.1(g) develop training programs that will prepare substantial numbers of current employees from under-represented religious groups for skilled jobs, including the expansion of existing programs and the creation of new programs to train, upgrade, and improve the skills of workers from under-represented religious groups;

69.3.1(h) establish procedures to asses, identify, and actively recruit employees from under-represented religious groups with potential for further advancement; and

69.3.1(i) appoint a senior management staff member to oversee affirmative actionefforts and develop a timetable to ensure their full implementation.

69.4 The **Contractor** agrees that the covenants and representations in Article 69.2 are material conditions to this **Contract**. In the event the **Agency** receives information that the **Contractor** who made the stipulation required by this Article 69 is in violation thereof, the **Agency** shall review such information and give the **Contractor** an opportunity to respond. If the **Agency** finds that a violation has occurred, the **Agency** shall have the right to declare the **Contractor** in default in default and/or terminate this **Contract** for cause and procure supplies, services or **Work** from another source in the manner the **Agency** deems proper. In the event of such termination, the **Contractor** shall pay to the **Agency**, or the **Agency** in its sole discretion may withhold from any amounts otherwise payable to the **Contractor**, the difference between the **Contract** price for the uncompleted portion of this **Contract** and the cost to the **Agency** of completing performance of this **Contract** either itself or by engaging another **Contractor** or **Contractors**. In the case of a requirement **Contract**, the **Contractor** shall be liable for such difference in price for the entire amount of supplies required by the **Agency** for the uncompleted term of **Contractor's Contract**. In the case of a construction **Contract**, the **Agency** shall also have the right to hold the **Contractor** in partial or total default in

accordance with the default provisions of this **Contract**, and/or may seek debarment or suspension of the **Contractor**. The rights and remedies of the **Agency** hereunder shall be in addition to, and not in lieu of, any rights and remedies the **Agency** has pursuant to this **Contract** or by operation of **Law**.

ARTICLE 70. ELECTRONIC FILING/NYC DEVELOPMENT HUB

70.1 The **Contractor** shall electronically file all alteration type-2 and alteration type-3 applications via the New York City Development Hub Web site, except applications for the following types of minor alterations: enlargements, curb cuts, legalizations, fire alarms, builders pavement plans, and jobs filed on Landmark Preservation Commission calendared properties. All such filings must be professionally certified. Information about electronic filing via the New York City Development Hub is available on the **City** Department of Buildings Web site at www.nyc.gov/buildings.

ARTICLE 71. PROHIBITION OF TROPICAL HARDWOODS

71.1 Tropical hardwoods, as defined in Section 165 of the New York State Finance Law (Finance Law), shall not be utilized in the performance of this **Contract** except as expressly permitted by Section 165 of the Finance Law.

ARTICLE 72. CONFLICTS OF INTEREST

72.1 Section 2604 of the **City** Charter and other related provisions of the **City** Charter, the Administrative Code, and the Penal Law are applicable under the terms of this **Contract** in relation to conflicts of interest and shall be extended to **Subcontractors** authorized to perform **Work**, labor and services pursuant to this **Contract** and further, it shall be the duty and responsibility of the **Contractor**to so inform its respective **Subcontractors**. Notice is hereby given that, under certain circumstances, penalties may be invoked against the donor as well as the recipient of any form of valuable gift.

ARTICLE 73. MERGER CLAUSE

73.1 The written **Contract** herein, contains all the terms and conditions agreed upon by the parties hereto, and no other agreement, oral or otherwise, regarding the subject matter of this **Contract** shall be deemed to exist or to bind any of the parties hereto, or to vary any of the terms contained herein.

ARTICLE 74. STATEMENT OF WORK

74.1 The **Contractor** shall furnish all labor and materials and perform all **Work** in strictaccordance with the **Specifications** and **Addenda** thereto, numbered as shown in Schedule A.

ARTICLE 75. COMPENSATION TO BE PAID TO CONTRACTOR

75.1 The **City** will pay and the **Contractor** will accept in full consideration for the performance of the **Contract**, subject to additions and deductions as provided herein, the total sum shown in Schedule A, this said sum being the amount at which the **Contract** was awarded to the **Contractor** at a public letting thereof, based upon the **Contractor's** bid for the **Contract**.

ARTICLE 76. ELECTRONIC FUNDS TRANSFER

76.1 In accordance with Section 6-107.1 of the Administrative Code, the **Contractor** agrees to accept payments under this **Contract** from the **City** by electronic funds transfer (EFT). An EFT is any transfer of funds, other than a transaction originated by check, draft or similar paper instrument, which is initiated through an electronic terminal, telephonic instrument or computer or magnetic tape so as to order, instruct or authorize a financial institution to debit or credit an account. Prior to the first payment made under this **Contract**, the **Contractor** shall designate one financial institution or other authorized payment agent and shall complete the attached "EFT Vendor Payment Enrollment Form" in order to provide the Commissioner of the **City** Department of Finance with information necessary for the **Contractor** to receive electronic funds transfer payments through a designated financial institution or authorized payment agent. The crediting of the amount of a payment to the appropriate account on the books of a financial institution or other authorized payment agent designated by the **Contractor** shall constitute full satisfaction by the **City** for the amount of the payment under this **Contract**. The account information supplied by the **Contractor** to facilitate the electronic funds transfer shall remain confidential to the fullest extent provided by **Law**.

76.2 The **Commissioner** may waive the application of the requirements of this Article 76 to payments on contracts entered into pursuant to Section 315 of the **City** Charter. In addition, the Commissioner of the Department of Finance and the Comptroller may jointly issue standards pursuant to which the **Agency** may waive the requirements of this Article 76 for payments in the following circumstances: (i) for individuals or classes of individuals for whom compliance imposes a hardship; (ii) for classifications or types of checks; or (iii) in other circumstances as may be necessary in the interest of the **City**.

ARTICLE 77. RECORDS RETENTION

77.1 The **Contractor** agrees to retain all books, records, and other documents relevant to this **Contract** for six years after the final payment or termination of this **Contract**, whichever is later. **City**, state, and federal auditors and any other persons duly authorized by the **City** shall have full access to and the right to examine any such books, records, and other documents during the retention period.

ARTICLE 78. EXAMINATION AND VIEWING OF SITE, CONSIDERATION OF OTHER SOURCES OF INFORMATION AND CHANGED SITE CONDITIONS

78.1 Pre-Bidding (Investigation) Viewing of Site – Bidders must carefully view and examine the **Site** of the proposed **Work**, as well as its adjacent area, and seek other usual sources of information, for they will be conclusively presumed to have full knowledge of any and all conditions and hazards on, about or above the **Site** relating to or affecting in any way the performance of the **Work** to be done under the **Contract** that were or should have been known by a reasonably prudent bidder. To arrange a date for visiting the **Site**,

bidders are to contact the **Agency** contact person specified in the bid documents.

78.2 Should the **Contractor** encounter during the progress of the Work site conditions or environmental hazards at the **Site** materially differing from any shown on the **Contract Drawings** or indicated in the **Specifications** or such conditions or environmental hazards as could not reasonablyhave been anticipated by the **Contractor**, which conditions or hazards will materially affect the cost of the **Work** to be done under the **Contract**, the attention of the **Commissioner** must be called immediately to such conditions or hazards before they are disturbed. The **Commissioner** shall thereupon promptly investigate the conditions or hazards. If the **Commissioner** finds that they do so materially differ, and that they could not have been reasonably anticipated by the **Contractor**, the **Contract** may be modified with the **Commissioner**'s written approval.

ARTICLE 79. PARTICIPATION BY MINORITY-OWNED AND WOMEN-OWNED BUSINESS ENTERPRISES IN CITY PROCUREMENT

ARTICLE I. M/WBE PROGRAM

Section 6-129 of the Administrative Code of the City of New York ("Section 6-129") establishes the program for participation in City procurement ("M/WBE Program") by minority- owned business enterprises ("MBEs") and women-owned business enterprises ("WBEs"), certified in accordance with Section 1304 of the New York City Charter. As stated in Section 6- 129, the intent of the program is to address the impact of discrimination on the City's procurement process, and to promote the public interest in avoiding fraud and favoritism in the procurement process, increasing competition for City business, and lowering contract costs. The contract provisions contained herein are pursuant to Section 6-129, and the rules of the Department of Small Business Services ("DSBS") promulgated thereunder.

If this Contract is subject to the M/WBE Program established by Section 6-129, the specific requirements of MBE and/or WBE participation for this Contract are set forth in Schedule B of the Contract (entitled the "M/WBE Utilization Plan") and are detailed below.

The Contractor must comply with all applicable MBE and WBE requirements for this Contract.

All provisions of Section 6-129 are hereby incorporated in the Contract by reference and all terms used herein that are not defined herein shall have the meanings given such terms in Section 6-129.

References to MBEs or WBEs shall also include such businesses certified pursuant to the executive law where credit is required by section 311 of the New York City Charter or other provision of law.

Article I, Part A, below, sets forth provisions related to the participation goals for construction, standard and professional services contracts.

Article I, Part B, below, sets forth miscellaneous provisions related to the M/WBE Program.

PART A: PARTICIPATION GOALS FOR CONSTRUCTION, STANDARD AND PROFESSIONAL SERVICES CONTRACTS OR TASK ORDERS

1. The MBE and/or WBE Participation Goals established for this Contract or Task Orders issued pursuant to this Contract, ("Participation Goals"), as applicable, are set forth on Schedule B, Part 1 to this Contract (see Page 1, Line 1 Total Participation Goals) or will be set forth on Schedule B, Part 1 to Task Orders issued pursuant to this Contract, as applicable.

The Participation Goals represent a percentage of the total dollar value of the Contract or Task Order, as applicable, that may be achieved by awarding subcontracts to firms certified with DSBS as MBEs and/or WBEs, and/or by crediting the participation of prime contractors and/or qualified joint ventures as provided in Section 3 below, unless the goals have been waived or modified by Agency in accordance with Section 6-129 and Part A, Sections 10 and 11 below, respectively.

2. If Participation Goals have been established for this Contract or Task Orders issued pursuant to this Contract, Contractor agrees or shall agree as a material term of the Contract that Contractor shall be subject to the Participation Goals, unless the goals are waived or modified by Agency in accordance with Section 6-129 and Part A, Sections 10 and 11 below, respectively.

3. If Participation Goals have been established for this Contract or Task Order issued pursuant to this Contract, a Contractor that is an MBE and/or WBE shall be permitted to count its own participation toward fulfillment of the relevant Participation Goal, provided that in accordance with Section 6-129 the value of Contractor's participation shall be determined by subtracting from the total value of the Contract or Task Order, as applicable, any amounts that the Contractor pays to direct subcontractors (as defined in Section 6-129(c)(13)), and provided further that a Contractor that is certified as both an MBE and a WBE may count its own participation either toward the goal for MBEs or the goal for WBEs, but not both.

A Contractor that is a qualified joint venture (as defined in Section 6-129(c)(30)) shall be permitted to count a percentage of its own participation toward fulfillment of the relevant Participation Goal. In accordance with Section 6-129, the value of Contractor's participation shall be determined by subtracting from the total value of the Contract or Task Order, as applicable, any amounts that Contractor pays to direct subcontractors, and then multiplying the remainder by the percentage to be applied to total profit to determine the amount to which an MBE or WBE is entitled pursuant to the joint venture agreement, provided that where a participant in a joint venture is certified as both an MBE and a WBE, such amount shall be counted either toward the goal for MBEs or the goal for WBEs, but not both.

4. A. If Participation Goals have been established for this Contract, a prospective contractor shall be required to submit with its bid or proposal, as applicable, a completed Schedule B, M/WBE Utilization Plan, Part 2 (see Pages1-2) indicating: (a) whether the contractor is an MBE or WBE, or qualified joint venture; (b) the percentage of work it intends to award to direct subcontractors; (c) in cases where the contractor intends to award direct subcontracts, a description of the type and dollar value of work designated for participation by MBEs and/or WBEs, and the time frames in which such work is scheduled to begin and end; as well as the name, addresses, and telephone numbers of the M/WBE subcontractors if required by the solicitation; and (d) the prospective contractor's required certification and affirmations. In the event that this M/WBE Utilization Plan indicates that the bidder or proposer, as applicable, does not intend to meet the Participation Goals, the bid or proposal, as applicable, shall be deemed non-responsive, unless Agency has granted the bidder or proposer, as applicable, a pre-award waiver of the Participation Goals in accordance with Section 6-129 and Part A, Section 10 below.

B. (i) If this Contract is for a master services agreement or other requirements type contract that will result in the issuance of Task Orders that will be individually registered ("Master Services Agreement") and is subject to M/WBE Participation Goals, a prospective contractor shall be required to submit with its bid or proposal, as applicable, a completed Schedule B, M/WBE Participation Requirements for Master Services Agreements That Will Require Individually Registered Task Orders, Part 2 (page 2) indicating the prospective contractor's certification and required affirmations to make all reasonable good faith efforts to meet participation goals established on each individual Task Order issued pursuant to this Contract, or if a partial waiver is obtained or such goals are modified by the Agency, to meet the modified Participation Goals by soliciting and obtaining the participation of certified MBE and/or WBE firms. In the event that the Schedule B indicates that the bidder or proposer, as applicable, does not intend to meet the Participation Goals that may be established on Task Orders issued pursuant to this Contract, the bid or proposal, as applicable, shall be deemed non- responsive.

(ii) Participation Goals on a Master Services Agreement will be established for individual Task Orders issued after the Master Services Agreement is awarded. If Participation Goals have been established on a Task Order, a contractor shall be required to submit a Schedule B – M/WBE Utilization Plan For Independently Registered Task Orders That Are Issued Pursuant to Master Services Agreements, Part 2 (see Pages 1-2) indicating: (a) whether the contractor is an MBE or WBE, or qualified joint venture; (b) the percentage of work it intends to award to direct subcontractors; (c) in cases where the contractor intends to award direct subcontracts, a description of the type and dollar value of work designated for participation by MBEs and/or WBEs, and the time frames in which such work is scheduled to begin and end; as well as the name, addresses, and telephone numbers of the M/WBE subcontractors if required by the solicitation; and (d) the prospective contractor's required certification and affirmations. The contractor must engage in good faith efforts to meet the Participation Goals as established for the Task Order unless Agency has granted the contractor a pre-award waiver of the Participation Goals in accordance with Section 6-129 and Part A, Section 10 below.

C. THE BIDDER/PROPOSER MUST COMPLETE THE SCHEDULE B INCLUDED HEREIN (SCHEDULE B, PART 2). A SCHEDULE B SUBMITTED BY THE BIDDER/PROPOSER WHICH DOES NOT INCLUDE THE VENDOR CERTIFICATION AND REQUIRED AFFIRMATIONS WILL BE DEEMED TO BE NON-RESPONSIVE, UNLESS A FULL WAIVER OF THE PARTICIPATION GOALS IS GRANTED (SCHEDULE B, PART 3). IN THE EVENT THAT THE CITY DETERMINES THAT THE BIDDER/PROPOSER HAS SUBMITTED A SCHEDULE B WHERE THE VENDOR CERTIFICATION AND REQUIRED AFFIRMATIONS ARE COMPLETED BUT OTHER ASPECTS OF THE SCHEDULE B ARE NOT COMPLETE, OR CONTAIN A COPY OR COMPUTATION ERROR THAT IS AT ODDS WITH THE VENDOR CERTIFICATION AND AFFIRMATIONS, THE BIDDER/PROPOSER WILL BE NOTIFIED BY THE AGENCY AND WILL BE GIVEN FOUR (4) CALENDAR DAYS FROM RECEIPT OF NOTIFICATION TO CURE THE SPECIFIED DEFICIENCIES AND RETURN A COMPLETED SCHEDULE B TO THE AGENCY. FAILURE TO DO SO WILL RESULT IN A DETERMINATION THAT THE BID/PROPOSAL IS NON-RESPONSIVE. RECEIPT OF NOTIFICATION IS DEFINED AS THE DATE NOTICE IS E-MAILED OR FAXED (IF THE BIDDER/PROPOSER HAS PROVIDED AN E-MAIL ADDRESS OR FAX NUMBER), OR NO LATER THAN FIVE (5) CALENDAR DAYS FROM THE DATE OF MAILING OR UPON DELIVERY, IF DELIVERED.

5. Where an M/WBE Utilization Plan has been submitted, the Contractor shall, within 30 days of issuance by Agency of a notice to proceed, submit a list of proposed persons or entities to which it intends to award subcontracts within the subsequent 12 months. In the case of multi- year contracts, such list shall also be submitted every year thereafter. The Agency may also require the Contractor to report periodically about the contracts awarded by its direct subcontractors to indirect subcontractors (as defined in Section 6-129(c)(22)). PLEASE NOTE: If this Contract is a public works project subject to GML §101(5) (i.e., a contract valued at or below $3M for projects in New York City) or if the Contract is subject to a project labor agreement in accordance with Labor Law §222, and the bidder is required to identify at the time of bid submission its intended subcontractors for the Wicks trades (plumbing and gas fitting; steam heating, hot water heating, ventilating and air conditioning (HVAC); and electric wiring), the Contractor must identify all those to which it intends to award construction subcontracts for any portion of the Wicks trade work at the time of bid submission, regardless of what point in the life of the contract such subcontracts will occur. In identifying intended subcontractors in the bid submission, bidders may satisfy any Participation Goals established for this Contract by proposing one or more subcontractors that are MBEs and/or WBEs for any portion of the Wicks trade work. In the event that the Contractor's selection of a subcontractor is disapproved, the Contractor shall have a reasonable time to propose alternate subcontractors.

6. MBE and WBE firms must be certified by DSBS in order for the Contractor to credit such firms' participation toward the attainment of the Participation Goals. Such certification must occur prior to the firms' commencement of work. A list of city-certified MBE and WBE firms may be obtained from the DSBS website at www.nyc.gov/buycertified, by emailing DSBS at buyer@sbs.nyc.gov, by calling (212) 513-6451, or by visiting or writing DSBS at One Liberty Plaza ., New York, New York, 10006, 11th floor. Eligible firms that have not yet

been certified may contact DSBS in order to seek certification by visiting www.nyc.gov/getcertified, emailing MWBE@sbs.nyc.gov, or calling the DSBS certification helpline at (212) 513-6311. A firm that is certified as both an MBE and a WBE may be counted either toward the goal for MBEs or the goal for WBEs, but not both. No credit shall be given for participation by a graduate MBE or graduate WBE, as defined in Section 6-129(c)(20).

7. Where an M/WBE Utilization Plan has been submitted, the Contractor shall, with each voucher for payment, and/or periodically as Agency may require, submit statements, certified under penalty of perjury, which shall include, but not be limited to,: the total amount the Contractor paid to its direct subcontractors, and, where applicable pursuant to Section 6-129(j), the total amount direct subcontractors paid to indirect subcontractors; the names, addresses and contact numbers of each MBE or WBE hired as a subcontractor by the Contractor, and, where applicable, hired by any of the Contractor's direct subcontractors; and the dates and amounts paid to each MBE or WBE. The Contractor shall also submit, along with its voucher for final payment: the total amount it paid to subcontractors, and, where applicable pursuant to Section 6- 129(j), the total amount its direct subcontractors paid directly to their indirect subcontractors; and a final list, certified under penalty of perjury, which shall include the name, address and contact information of each subcontractor that is an MBE or WBE, the work performed by, and the dates and amounts paid to each.

8. If payments made to, or work performed by, MBEs or WBEs are less than the amount specified in the Contractor's M/WBE Utilization Plan, Agency shall take appropriate action, in accordance with Section 6-129 and Article II below, unless the Contractor has obtained a modification of its M/WBE Utilization Plan in accordance with Section 6-129 and Part A, Section 11 below.

9. Where an M/WBE Utilization Plan has been submitted, and the Contractor requests a change order the value of which exceeds the greater of 10 percent of the Contract or Task Order, as applicable, or $500,000, Agency shall review the scope of work for the Contract or Task Order, as applicable, and the scale and types of work involved in the change order, and determine whether the Participation Goals should be modified.

10. Pre-award waiver of the Participation Goals. (a) A bidder or proposer, or contractor with respect to a Task Order, may seek a pre-award full or partial waiver of the Participation Goals in accordance with Section 6-129, which requests that Agency change one or more Participation Goals on the grounds that the Participation Goals are unreasonable in light of the availability of certified firms to perform the services required, or by demonstrating that it has legitimate business reasons for proposing a lower level of subcontracting in its M/WBE Utilization Plan.

(b) To apply for a full or partial waiver of the Participation Goals, a bidder, proposer, or contractor, as applicable, must complete Part 3 of Schedule B **and submit such request no later than seven (7) calendar days prior to the date and time the bids, proposals, or Task Orders are due, in writing by email at MWBEModification@ddc.nyc.gov. Full or partial waiver requests that are received later than seven (7) calendar days prior to the date and time the bids, proposals, or Task Orders are due may be rejected as untimely.** Bidders, proposers, or contractors, as applicable, who have submitted timely requests will receive an Agency response by no later than two (2) calendar days prior to the due date for bids, proposals, or Task Orders; provided, however, that if that date would fall on a weekend or holiday, an Agency response will be provided by close-of-business on the business day before such weekend or holiday date.

(c) If the Agency determines that the Participation Goals are unreasonable in light of the availability of certified firms to perform the services required, it shall revise the solicitation and extend the deadline for bids and proposals, or revise the Task Order, as applicable.

(d) Agency may grant a full or partial waiver of the Participation Goals to a bidder, proposer or contractor, as applicable, who demonstrates—before submission of the bid, proposal or Task Order, as applicable—that it has legitimate business reasons for proposing the level of subcontracting in its M/WBE Utilization Plan. In making its determination, Agency shall consider factors that shall include, but not be limited

to, whether the bidder, proposer or contractor, as applicable, has the capacity and the bona fide intention to perform the Contract without any subcontracting, or to perform the Contract without awarding the amount of subcontracts represented by the Participation Goals. In making such determination, Agency may consider whether the M/WBE Utilization Plan is consistent with past subcontracting practices of the bidder, proposer or contractor, as applicable, whether the bidder, proposer or contractor, as applicable, has made efforts to form a joint venture with a certified firm, and whether the bidder, proposer, or contractor, as applicable, has made good faith efforts to identify other portions of the Contract that it intends to subcontract.

11. Modification of M/WBE Utilization Plan. (a) A Contractor may request a modification of its M/WBE Utilization Plan after award of this Contract. PLEASE NOTE: If this Contract is a public works project subject to GML §101(5) (i.e., a contract valued at or below $3M for projects in New York City) or if the Contract is subject to a project labor agreement in accordance with Labor Law §222, and the bidder is required to identify at the time of bid submission its intended subcontractors for the Wicks trades (plumbing and gas fitting; steam heating, hot water heating, ventilating and air conditioning (HVAC); and electric wiring), the Contractor may request a Modification of its M/WBE Utilization Plan as part of its bid submission. The Agency may grant a request for Modification of a Contractor's M/WBE Utilization Plan if it determines that the Contractor has established, with appropriate documentary and other evidence, that it made reasonable, good faith efforts to meet the Participation Goals. In making such determination, Agency shall consider evidence of the following efforts, as applicable, along with any other relevant factors:

(i) The Contractor advertised opportunities to participate in the Contract, where appropriate, in general circulation media, trade and professional association publications and small business media, and publications of minority and women's business organizations;
(ii) The Contractor provided notice of specific opportunities to participate in the Contract, in a timely manner, to minority and women's business organizations;
(iii) The Contractor sent written notices, by certified mail or facsimile, in a timely manner, to advise MBEs or WBEs that their interest in the Contract was solicited;
(iv) The Contractor made efforts to identify portions of the work that could be substituted for portions originally designated for participation by MBEs and/or WBEs in the M/WBE Utilization Plan, and for which the Contractor claims an inability to retain MBEs or WBEs;
(v) The Contractor held meetings with MBEs and/or WBEs prior to the date their bids or proposals were due, for the purpose of explaining in detail the scope and requirements of the work for which their bids or proposals were solicited;
(vi) The Contractor made efforts to negotiate with MBEs and/or WBEs as relevant to perform specific subcontracts, or act as suppliers or service providers;
(vii) Timely written requests for assistance made by the Contractor to Agency's M/WBE liaison officer and to DSBS;
(viii) Description of how recommendations made by DSBS and Agency were acted upon and an explanation of why action upon such recommendations did not lead to the desired level of participation of MBEs and/or WBEs.

Agency's M/WBE officer shall provide written notice to the Contractor of the determination.

(b) The Agency may modify the Participation Goals when the scope of the work has been changed by the Agency in a manner that affects the scale and types of work that the Contractor indicated in its M/WBE Utilization Plan would be awarded to subcontractors.

12. If the Contractor was required to identify in its bid or proposal the MBEs and/or WBEs they intended to use in connection with the performance of the Contract or Task Order, substitutions to the identified firms may only be made with the approval of the Agency, which shall only be given when the Contractor has proposed to use a firm that would satisfy the Participation Goals to the same extent as the firm previously identified, unless the Agency determines that the Contractor has established, with appropriate documentary and other evidence, that it made reasonable, good faith efforts. In making such determination, the Agency shall require evidence of the

efforts listed in Section 11(a) above, as applicable, along with any other relevant factors.

13. If this Contract is for an indefinite quantity of construction, standard or professional services or is a requirements type contract and the Contractor has submitted an M/WBE Utilization Plan and has committed to subcontract work to MBEs and/or WBEs in order to meet the Participation Goals, the Contractor will not be deemed in violation of the M/WBE Program requirements for this Contract with regard to any work which was intended to be subcontracted to an MBE and/or WBE to the extent that the Agency has determined that such work is not needed.

14. If Participation Goals have been established for this Contract or a Task Order issued pursuant to this Contract, at least once annually during the term of the Contract or Task Order, as applicable, Agency shall review the Contractor's progress toward attainment of its M/WBE Utilization Plan, including but not limited to, by reviewing the percentage of work the Contractor has actually awarded to MBE and/or WBE subcontractors and the payments the Contractor made to such subcontractors.

15. If Participation Goals have been established for this Contract or a Task Order issued pursuant to this Contract, Agency shall evaluate and assess the Contractor's performance in meeting those goals, and such evaluation and assessment shall become part of the Contractor's overall contract performance evaluation.

PART B: MISCELLANEOUS

The Contractor shall take notice that, if this solicitation requires the establishment of a M/WBE Utilization Plan, the resulting contract may be audited by DSBS to determine compliance with Section 6-129. See §6-129(e)(10). Furthermore, such resulting contract may also be examined by the City's Comptroller to assess compliance with the M/WBE Utilization Plan.

1. Pursuant to DSBS rules, construction contracts that include a requirement for a M/WBE Utilization Plan shall not be subject to the law governing Locally Based Enterprises set forth in Section 6-108.1 of the Administrative Code of the City of New York.

2. DSBS is available to assist contractors and potential contractors in determining the availability of MBEs and/or WBEs to participate as subcontractors, and in identifying opportunities that are appropriate for participation by MBEs and/or WBEs in contracts.

3. Prospective contractors are encouraged to enter into qualified joint venture agreements with MBEs and/or WBEs as defined by Section 6-129(c)(30).

4. By submitting a bid or proposal the Contractor hereby acknowledges its understanding of the M/WBE Program requirements set forth herein and the pertinent provisions of Section 6-129, and any rules promulgated thereunder, and if awarded this Contract, the Contractor hereby agrees to comply with the M/WBE Program requirements of this Contract and pertinent provisions of Section 6-129, and any rules promulgated thereunder, all of which shall be deemed to be material terms of this Contract. The Contractor hereby agrees to make all reasonable, good faith efforts to solicit and obtain the participation of MBEs and/or WBEs to meet the required Participation Goals.

ARTICLE II. ENFORCEMENT

1. If Agency determines that a bidder or proposer, as applicable, has, in relation to this procurement, violated Section 6-129 or the DSBS rules promulgated pursuant to Section 6-129, Agency may disqualify such bidder or proposer, as applicable, from competing for this Contract and the Agency may revoke such bidder's or proposer's prequalification status, if applicable.

2. Whenever Agency believes that the Contractor or a subcontractor is not in compliance with Section 6-129

or the DSBS rules promulgated pursuant to Section 6-129, or any provision of this Contract that implements Section 6-129, including, but not limited to any M/WBE Utilization Plan, Agency shall send a written notice to the Contractor describing the alleged noncompliance and offering the Contractor an opportunity to be heard. Agency shall then conduct an investigation to determine whether such Contractor or subcontractor is in compliance.

3. In the event that the Contractor has been found to have violated Section 6-129, the DSBS rules promulgated pursuant to Section 6-129, or any provision of this Contract that implements Section 6-129, including, but not limited to, any M/WBE Utilization Plan, Agency may determine that one of the following actions should be taken:

(a) entering into an agreement with the Contractor allowing the Contractor to cure the violation;
(b) revoking the Contractor's pre-qualification to bid or make proposals for future contracts;
(c) making a finding that the Contractor is in default of the Contract;
(d) terminating the Contract;
(e) declaring the Contractor to be in breach of Contract;
(f) withholding payment or reimbursement;
(g) determining not to renew the Contract;
(h) assessing actual and consequential damages;
(i) assessing liquidated damages or reducing fees, provided that liquidated damages may be based on amounts representing costs of delays in carrying out the purposes of the M/WBE Program, or in meeting the purposes of the Contract, the costs of meeting utilization goals through additional procurements, the administrative costs of investigation and enforcement, or other factors set forth in the Contract;
(j) exercising rights under the Contract to procure goods, services or construction from another contractor and charge the cost of such contract to the Contractor that has been found to be in noncompliance; or
(k) taking any other appropriate remedy.

4. If an M/WBE Utilization Plan has been submitted, and pursuant to this Article II, Section 3, the Contractor has been found to have failed to fulfill its Participation Goals contained in its M/WBE Utilization Plan or the Participation Goals as modified by Agency pursuant to Article I, Part A, Section 11, Agency may assess liquidated damages in the amount of ten percent (10%) of the difference between the dollar amount of work required to be awarded to MBE and/or WBE firms to meet the Participation Goals and the dollar amount the Contractor actually awarded and paid, and/or credited, to MBE and/or WBE firms. In view of the difficulty of accurately ascertaining the loss which the City will suffer by reason of Contractor’s failure to meet the Participation Goals, the foregoing amount is hereby fixed and agreed as the liquidated damages that the City will suffer by reason of such failure, and not as a penalty. Agency may deduct and retain out of any monies which may become due under this Contract the amount of any such liquidated damages; and in case the amount which may become due under this Contract shall be less than the amount of liquidated damages suffered by the City, the Contractor shall be liable to pay the difference.

5. Whenever Agency has reason to believe that an MBE and/or WBE is not qualified for certification, or is participating in a contract in a manner that does not serve a commercially useful function (as defined in Section 6-129(c)(8)), or has violated any provision of Section 6- 129, Agency shall notify the Commissioner of DSBS who shall determine whether the certification of such business enterprise should be revoked.

6. Statements made in any instrument submitted to Agency pursuant to Section 6-129 shall be submitted under penalty of perjury and any false or misleading statement or omission shall be grounds for the application of any applicable criminal and/or civil penalties for perjury. The making of a false or fraudulent statement by an MBE and/or WBE in any instrument submitted pursuant to Section 6-129 shall, in addition, be grounds for revocation of its certification.

7. The Contractor's record in implementing its M/WBE Utilization Plan shall be a factor in the evaluation of

its performance. Whenever Agency determines that a Contractor's compliance with an M/WBE Utilization Plan has been unsatisfactory, Agency shall, after consultation with the City Chief Procurement Officer, file an advice of caution form for inclusion in PASSPort as caution data.

Bond No. 015226477

PERFORMANCE BOND #2

Performance Bond #2 (4 pages): Use if the total contract price is more than $5 Million.

PERFORMANCE BOND #2 (Page 1)

PERFORMANCE BOND #2KNOW ALL PERSONS BY THESE PRESENTS:,

That we, JRCRUZ CORP.
33 W. Main Street, Holmdel, NJ 07733

hereinafter referred to as the "Principal,"
and, Liberty Mutual Insurance Company
175 Berkeley Street, Boston, MA 02116

hereinafter referred to as the "Surety" ("Sureties") are held and firmly bound to THE CITY OF NEW YORK, hereinafter referred to as the "City" or to its successors and assigns in the penal sum of Six Million Eight Hundred Twenty Four Thousand Two Hundred Fifty Five & 39/100

($6,824,255.39) Dollars, lawful money of the United States for the payment of which said sum of money well and truly to be made, we, and each of us, bind ourselves, our heirs, executors, administrators, successors and assigns, jointly and severally, firmly by these presents.

WHEREAS, the Principal is about to enter, or has entered, into a Contract in writing with the City for

EC-SER25 Reconstruction of Existing Sewers - Staten Island

a copy of which Contract is annexed to and hereby made a part of this bond as though herein set forth infull;

NOW, THEREFORE, the conditions of this obligation are such that if the Principal, his or its representatives or assigns, shall well and faithfully perform the said Contract and all modifications, amendments, additions and alterations thereto that may hereafter be made, according to its terms and its true intent and meaning, including repair and or replacement of defective work and guarantees of maintenance for the periods stated in the Contract, and shall fully indemnify and save harmless the Cityfrom all cost and damage which it may suffer by reason of the Principal's default of the Contract, and shall fully reimburse and repay the City for all outlay and expense which the City may incur in making

good any such default and shall protect the said City of New York against, and pay any and all amounts,damages, cost and judgments which may or shall be recovered against said City or its officers or agents orwhich the said City of New York may be called upon to pay any person or corporation by reason of anydamages arising or growing out of the Principal's default of the Contract, then this obligation shall be nulland void, otherwise to remain in full force and effect.

The Surety (Sureties), for value received, hereby stipulates and agrees, upon written notice from the Citythat the City has determined that the Principal is in default of the Contract, to either (1) pay the full amount of the above penal sum in complete discharge and exoneration of this bond and of all the liabilities of the Surety relating to this bond, or (2) fully perform and complete the Work to be performed under theContract, pursuant to the terms, conditions, and covenants thereof. The Surety (Sureties) further agrees, at its option, either to tender the penal sum or to commence and diligently perform the Work specified in the Contract, including physical site work, within twenty-five (25) business days after written notice thereoffrom the City and to complete all Work within the time set forth in the Contract or such other time as agreed to between the City and Surety in accordance with the Contract. The Surety and the City reserveall rights and defenses each may have against the other; provided, however, that the Surety expressly agrees that its reservation of rights shall not provide a basis for non-performance of its obligation to commence and to complete all Work as provided herein.

The Surety (Sureties), for value received, for itself and its successors and assigns, hereby stipulates and agrees that the obligation of said Surety (Sureties) and its bond shall be in no way impaired or affected byany extension of time, modification, omission, addition, or change in or to the said Contract or the Workto be performed thereunder, or by any payment thereunder before the time required therein, or by any waiver of any provisions thereof, or by any assignment, subletting or other transfer thereof or of any Work to be performed or any moneys due or to become due thereunder; and said Surety (Sureties) does herebywaive notice of any and all of such extensions, modifications, omissions, additions, changes, payments,waivers, assignments, subcontracts and transfers, and hereby expressly stipulates and agrees that any andall things done and omitted to be done by and in relation to assignees, subcontractors, and other transferees shall have the same effect as to said Surety (Sureties) as though done or omitted to be done byor in relation to said Principal.

PERFORMANCE BOND #2 (Page 3)

IN WITNESS WHEREOF, The Principal and the Surety (Sureties) have hereunto set their hands and seals, and such of them as are corporations have caused their corporate seals to be hereunto affixed and these presents to be signed by their proper officers, this

31st day of December 2024.

(Seal)

JRCRUZ CORP. (L.S.)
Principal

(Seal)

By: Peter Lauro, President
Surety

Liberty Mutual Insurance Company

By: Adriana Giammichele, Atty-In-Fact (973-890-0900; Fax 973-890-9038; agiammichele@chagency.com)
Surety

(Seal)

By:
Surety

(Seal)

By:
Surety

(Seal)

By:
Surety

(Seal)

By:

Bond Premium Rate _____.

Bond Premium Cost _____.

If the Contractor (Principal) is a partnership, the bond should be signed by each of the individuals who are partners.

If the Contractor (Principal) is a corporation, the bond should be signed in its correct corporate name by aduly authorized officer, agent, or attorney-in-fact.

There should be executed an appropriate number of counterparts of the bond corresponding to the numberof counterparts of the Contract.

ACKNOWLEDGMENT OF PRINCIPAL IF A CORPORATION

State of New Jersey County of Monmouth ss:

On this 31st day of December, 2024 before me personally came Peter Lauro,
to me known, who, being by me duly sworn did depose and say that he residesat __
5 Cypress Way,Colts Neck, NJ 07722 ; that he/she is the President
of the corporation described in and which executed the foregoing instrument; that he/she signed his/her name to theforegoing instrument by order of the directors of said corporation as the duly authorized and binding act thereof.

ROSARIO REYES
Notary Public, State of New Jersey
My Commission Expires 11/16/2028

Rosario Reyes
Notary Public or Commissioner of Deeds.

ACKNOWLEDGMENT OF PRINCIPAL IF A PARTNERSHIP

State of_____County of_____ss:

On this_____day of_____, 20_____before me personally came_____,
to me known, who, being by me duly sworn did depose and say that he/she residesat_____
_____; that he/she is_____partner of _____, a limited/general partnership existing under the laws of the State of _____, the partnership described in and which executed the foregoing instrument;and that he/she signed his/her name to the foregoing instrument as the duly authorized and binding act of said partnership.

_____
Notary Public or Commissioner of Deeds

ACKNOWLEDGMENT OF PRINCIPAL IF AN INDIVIDUAL

State of_____County of_____ss:

On this_____day of_____, 20_____before me personally came_____,
to me known, who, being by me duly sworn did depose and say that he/she residesat_____
_____, and that he/she is the individual whose name is subscribed to the within instrument and acknowledged to me that by his/her signature on the instrument, said individual executed the instrument.

_____
Notary Public or Commissioner of Deeds

Each executed bond should be accompanied by: (a) appropriate acknowledgments of the respective parties; (b) appropriate duly certified copy of Power of Attorney or other certificate of authority where bond is executed by agent, officer or other representative of Principal or Surety; (c) a duly certified extract from By-Laws or resolutions of Surety under which Power of Attorney or other certificate of authority of its agent, officer or representative was issued, and (d) certified copy of latest published financial statement of assets and liabilities of Surety.

* * * * * * * *

Affix Acknowledgments and Justification of Sureties.

ACKNOWLEDGEMENT OF SURETY

State of New Jersey]
|-ss
County of Essex]

On December 31, 2024, before me personally came Adriana Giammichele to me known, who, being by me duly sworn, did depose and say that she is an attorney-in-fact of Liberty Mutual Insurance Company the corporation described in and which executed the within instrument; that she knows the corporate seal of said corporation, and that the seal affixed to the within instrument is such corporate seal, and that she signed the said instrument and affixed the said seal as Attorney-in-Fact by authority of the Board of Directors of said corporation and by authority of this office under the Standing Resolutions thereof.

My Commission expires:

Jami A. Mattson
Notary Public

JAMI A. MATTSON
Notary Public, State of New Jersey
My Commission Expires
July 17, 2025

This Power of Attorney limits the acts of those named herein, and they have no authority to bind the Company except in the manner and to the extent herein stated.

Liberty Mutual. SURETY

Liberty Mutual Insurance Company
The Ohio Casualty Insurance Company
West American Insurance Company

Certificate No: **8211045 - 973841**

POWER OF ATTORNEY

KNOWN ALL PERSONS BY THESE PRESENTS: That The Ohio Casualty Insurance Company is a corporation duly organized under the laws of the State of New Hampshire, that Liberty Mutual Insurance Company is a corporation duly organized under the laws of the State of Massachusetts, and West American Insurance Company is a corporation duly organized under the laws of the State of Indiana (herein collectively called the "Companies"), pursuant to and by authority herein set forth, does hereby name, constitute and appoint, Adriana Giammichele, Joseph W. Mallory, Lisa Nosal, Louis A. Vlahakes, Pamela J. Boyle, Robert E. Culnen

all of the city of Totowa state of NJ each individually if there be more than one named, its true and lawful attorney-in-fact to make, execute, seal, acknowledge and deliver, for and on its behalf as surety and as its act and deed, any and all undertakings, bonds, recognizances and other surety obligations, in pursuance of these presents and shall be as binding upon the Companies as if they have been duly signed by the president and attested by the secretary of the Companies in their own proper persons.

IN WITNESS WHEREOF, this Power of Attorney has been subscribed by an authorized officer or official of the Companies and the corporate seals of the Companies have been affixed thereto this 4th day of December, 2023.

LIBERTY MUTUAL INSURANCE COMPANY INCORPORATED 1912 MASSACHUSETTS — THE OHIO CASUALTY INSURANCE COMPANY INCORPORATED 1919 NEW HAMPSHIRE — WEST AMERICAN INSURANCE COMPANY INCORPORATED 1991 INDIANA

Liberty Mutual Insurance Company
The Ohio Casualty Insurance Company
West American Insurance Company

By: David M. Carey
David M. Carey, Assistant Secretary

State of PENNSYLVANIA
County of MONTGOMERY ss

On this 4th day of December, 2023 before me personally appeared David M. Carey, who acknowledged himself to be the Assistant Secretary of Liberty Mutual Insurance Company, The Ohio Casualty Company, and West American Insurance Company, and that he, as such, being authorized so to do, execute the foregoing instrument for the purposes therein contained by signing on behalf of the corporations by himself as a duly authorized officer.

IN WITNESS WHEREOF, I have hereunto subscribed my name and affixed my notarial seal at Plymouth Meeting, Pennsylvania, on the day and year first above written.

TERESA PASTELLA COMMONWEALTH OF PENNSYLVANIA NOTARY PUBLIC

Commonwealth of Pennsylvania - Notary Seal
Teresa Pastella, Notary Public
Montgomery County
My commission expires March 28, 2025
Commission number 1126044
Member, Pennsylvania Association of Notaries

By: Teresa Pastella
Teresa Pastella, Notary Public

This Power of Attorney is made and executed pursuant to and by authority of the following By-laws and Authorizations of The Ohio Casualty Insurance Company, Liberty Mutual Insurance Company, and West American Insurance Company which resolutions are now in full force and effect reading as follows:

ARTICLE IV – OFFICERS: Section 12. Power of Attorney.
Any officer or other official of the Corporation authorized for that purpose in writing by the Chairman or the President, and subject to such limitation as the Chairman or the President may prescribe, shall appoint such attorneys-in-fact, as may be necessary to act in behalf of the Corporation to make, execute, seal, acknowledge and deliver as surety any and all undertakings, bonds, recognizances and other surety obligations. Such attorneys-in-fact, subject to the limitations set forth in their respective powers of attorney, shall have full power to bind the Corporation by their signature and execution of any such instruments and to attach thereto the seal of the Corporation. When so executed, such instruments shall be as binding as if signed by the President and attested to by the Secretary. Any power or authority granted to any representative or attorney-in-fact under the provisions of this article may be revoked at any time by the Board, the Chairman, the President or by the officer or officers granting such power or authority.

ARTICLE XIII– Execution of Contracts: Section 5. Surety Bonds and Undertakings.
Any officer of the Company authorized for that purpose in writing by the chairman or the president, and subject to such limitations as the chairman or the president may prescribe, shall appoint such attorneys-in-fact, as may be necessary to act in behalf of the Company to make, execute, seal, acknowledge and deliver as surety any and all undertakings, bonds, recognizances and other surety obligations. Such attorneys-in-fact subject to the limitations set forth in their respective powers of attorney, shall have full power to bind the Company by their signature and execution of any such instruments and to attach thereto the seal of the Company. When so executed such instruments shall be as binding as if signed by the president and attested by the secretary.

Certificate of Designation– The President of the Company, acting pursuant to the Bylaws of the Company, authorizes David M. Carey, Assistant Secretary to appoint such attorneys-in-fact as may be necessary to act on behalf of the Company to make, execute, seal, acknowledge and deliver as surety any and all undertakings, bonds, recognizances and other surety obligations.

Authorization– By unanimous consent of the Company's Board of Directors, the Company consents that facsimile or mechanically reproduced signature of any assistant secretary of the Company, wherever appearing upon a certified copy of any power of attorney issued by the Company in connection with surety bonds, shall be valid and binding upon the Company with the same force and effect as though manually affixed.

I, Renee C. Llewellyn, the undersigned, Assistant Secretary, The Ohio Casualty Insurance Company, Liberty Mutual Insurance Company, and West American Insurance Company do hereby certify that the original power of attorney of which the foregoing is a full, true and correct copy of the Power of Attorney executed by said Companies, is in full force and effect and has not been revoked.

IN TESTIMONY WHEREOF, I have hereunto set my hand and affixed the seals of said Companies this 31st day of December, 2024.

LIBERTY MUTUAL INSURANCE COMPANY INCORPORATED 1912 MASSACHUSETTS — THE OHIO CASUALTY INSURANCE COMPANY INCORPORATED 1919 NEW HAMPSHIRE — WEST AMERICAN INSURANCE COMPANY INCORPORATED 1991 INDIANA

By: Renee C. Llewellyn
Renee C. Llewellyn, Assistant Secretary

Not valid for mortgage, note, loan, letter of credit, currency rate, interest rate or residual value guarantees.

For bond and/or Power of Attorney (POA) verification inquiries, please call 610-832-8240 or email

LIBERTY MUTUAL INSURANCE COMPANY

FINANCIAL STATEMENT – DECEMBER 31, 2023

Assets	
Cash and Bank Deposits	$1,850,245,073.00
*Bonds – U.S Government	$3,859,565,383.00
*Other Bonds	$21,048,805,773.00
*Stocks	$19,937,271,802.00
Real Estate	$122,228,711.00
Agents' Balances or Uncollected Premiums	$8,208,660,427.00
Accrued Interest and Rents	$186,906,667.00
Other Admitted Assets	$15,677,869,683.63
Total Admitted Assets	**$70,891,553,519.63**

Liabilities	
Unearned Premiums	$10,298,963,305.00
Reserve for Claims and Claims Expense	$28,848,537,243.00
Funds Held Under Reinsurance Treaties	$360,714,151.00
Reserve for Dividends to Policyholders	$1,310,198.00
Additional Statutory Reserve	$296,126,000.00
Reserve for Commissions, Taxes and Other Liabilities	$7,622,413,466.63
Total	**$47,428,064,363.63**
Special Surplus Funds	$209,508,757.00
Capital Stock	$10,000,075.00
Paid in Surplus	$13,834,867,488.00
Unassigned Surplus	$9,409,112,836.00
Surplus to Policyholders	$23,463,489,156.00
Total Liabilities and Surplus	**$70,891,553,519.63**

* Bonds are stated at amortized or investment value; Stocks at Association Market Values.
The foregoing financial information is taken from Liberty Mutual Insurance Company's financial statement filed with the Massachusetts Department of Insurance.

I, TIM MIKOLAJEWSKI, Assistant Secretary of Liberty Mutual Insurance Company, do hereby certify that the foregoing is a true, and correct statement of the Assets and Liabilities of said Corporation, as of December 31, 2023, to the best of my knowledge and belief.

IN WITNESS WHEREOF, I have hereunto set my hand and affixed the seal of said Corporation at Seattle, Washington, this 8th day of March, 2024.

LIBERTY MUTUAL INSURANCE COMPANY INCORPORATED 1912 MASSACHUSETTS

Timothy A. Mikolajewski, Assistant Secretary

LMS-1262/LMIC

PAYMENT BOND

Use for any contract for which a Payment Bond is required.

Bond No. 015226477

PAYMENT BOND

KNOW ALL PERSONS BY THESE PRESENTS, That we, _____

JRCRUZ CORP.
33 W. Main Street, Holmdel, NJ 07733

hereinafter referred to as the "Principal", and Liberty Mutual Insurance Company

175 Berkeley Street, Boston, MA 02116

hereinafter referred to as the "Surety" ("Sureties") are held and firmly bound to THE CITY OF NEW YORK, hereinafter referred to as the "City" or to its successors and assigns, in the penal sum of

Six Million Eight Hundred Twenty Four Thousand Two Hundred Fifty Five & 39/100

($6,824,255.39) Dollars, lawful money of the United States, for the payment of which said sum of money well and truly to be made, we, and each of us, bind ourselves, our heirs, executors, administrators, successors and assigns, jointly and severally, firmly by these presents.

WHEREAS, the Principal is about to enter, or has entered, into a Contract in writing with the City for

EC-SER25 Reconstruction of Existing Sewers - Staten Island

a copy of which Contract is annexed to and hereby made a part of this bond as though herein set forth in full;

NOW, THEREFORE, the conditions of this obligation are such that if the Principal, his or its representatives or assigns and other Subcontractors to whom Work under this Contract is sublet and his or their successors and assigns shall promptly pay or cause to be paid all lawful claims for

(a) Wages and compensation for labor performed and services rendered by all persons engaged in the prosecution of the Work under said Contract, and any amendment or extension thereof or addition thereto, whether such persons be agents servants or employees of the Principal or any such Subcontractor, including all persons so engaged who perform the work of laborers or mechanics at or in the vicinity of the site of the Project regardless of any contractual relationship between the Principal or such Subcontractors, or his or their successors or assigns, on the one hand and such laborers or mechanics on the other, but not including office employees not regularly stationed at the site of the project; and

(b) Materials and supplies (whether incorporated in the permanent structure or not), as well as teams, fuels, oils, implements or machinery furnished, used or consumed by said Principal or any subcontractor at or in the vicinity of the site of the Project in the prosecution of the Work under said Contract and any amendment or extension thereof or addition thereto; then this obligation shall be void, otherwise to remain infull force and effect.

This bond is subject to the following additional conditions, limitations and agreements:

(a) The Principal and Surety (Sureties) agree that this bond shall be for the benefit of any materialmen or laborer having a just claim, as well as the City itself.

(b) All persons who have performed labor, rendered services or furnished materials and supplies,as aforesaid, shall have a direct right of action against the Principal and his, its or their successors and assigns, and the Surety (Sureties) herein, or against either or both or any of them and their successors and assigns. Such persons may sue in their own name, and may prosecute the suit to judgment and execution without the necessity of joining with any other persons as party plaintiff.

(c) The Principal and Surety (Sureties) agree that neither of them will hold the City liable for any judgment for costs of otherwise, obtained by either or both of them against a laborer or materialman in a suit brought by either a laborer or materialman under this bond for moneys allegedly due for performing work or furnishing material.

(d) The Surety (Sureties) or its successors and assigns shall not be liable for any compensation recoverable by an employee or laborer under the Workmen's Compensation Law.

(e) In no event shall the Surety (Sureties), or its successors or assigns, be liable for a greater sum than the penalty of this bond or be subject to any suit, action or proceeding hereon that is instituted by any person, firm, or corporation hereunder later than two years after the complete performance of said Contract and final settlement thereof.

The Principal, for himself and his successors and assigns, and the Surety (Sureties), for itself and its successors and assigns, do hereby expressly waive any objection that might be interposed as to the rightof the City to require a bond containing the foregoing provisions, and they do hereby further expressly waiveany defense which they or either of them might interpose to an action brought hereon by any person, firm or corporation, including subcontractors, materialmen and third persons, for work, labor, services, supplies or material performed rendered, or furnished as aforesaid upon the ground that there is no law authorizing the City to require the foregoing provisions to be place in this bond.

And the Surety (Sureties), for value received, for itself and its successors and assigns, hereby stipulates and agrees that the obligation of said Surety (Sureties), and its bonds shall be in no way impaired or affected by any extension of time, modification, omission, addition, or change in or of the said Contract or the work to be performed thereunder, or by any payment thereunder before the time required therein, or by any waiver of any provisions thereof, or by any assignment, subletting or other transfer thereof or of any part thereof, or of any Work to be performed, or any moneys due to become due thereunder and said Surety (Sureties) does hereby waive notice of any and all of such extensions, modifications, omissions, additions, changes, payments, waivers, assignments, subcontracts and transfers, and hereby expressly stipulates and agrees that any and all things done and omitted to be done by and in relation to assignees, Subcontractors, and other transferees shall have the same effect as to said Surety (Sureties) as though done or omitted to be done or in relation to said Principal.

PAYMENT BOND (Page 3)

IN WITNESS WHEREOF, the Principal and the Surety (Sureties) have hereunto set their handsand seals, and such of them as are corporations have caused their corporate seals to be hereunto affixed andthese presents to be signed by their proper officers, this 31st day of December, 2024.

(Seal) JRCRUZ CORP. (L.S.)Principal

By: Peter Lauro, President

(Seal) Liberty Mutual Insurance Company Surety

By:

Adriana Giammichele, Atty-In-Fact (973-890-0900; Fax 973-890-9038; agiammichele@chagency.com)

(Seal) _____ Surety

By: _____

(Seal) _____ Surety

By: _____

(Seal) _____ Surety

By: _____

If the Contractor (Principal) is a partnership, the bond should be signed by each of the individuals who are partners.

If the Contractor (Principal) is a corporation, the bond should be signed in its correct corporate name by aduly authorized officer, agent, or attorney-in-fact.

There should be executed an appropriate number of counterparts of the bond corresponding to the numberof counterparts of the Contract.

ACKNOWLEDGMENT OF PRINCIPAL, IF A CORPORATION

State of New Jersey County of Monmouth ss:

On this 31st day of December 2024, before me personally came Peter Lauro to me known, who, being by me duly sworn did depose and say that he resides at 5 Cypress Way, Colts Neck, NJ 07722 that he is the President of the corporation described in and which executed the foregoing instrument; that he knows the seal of said corporation; that one of the seals affixed to said instrument is such seal; that it was so affixed by order of the directors of said corporation, and that he signed his name thereto by like order.

Rosario Reyes

Notary Public or Commissioner of Deeds

ROSARIO REYES
Notary Public, State of New Jersey
My Commission Expires 11/16/2028

ACKNOWLEDGMENT OF PRINCIPAL, IF A PARTNERSHIP

State of_____County of_____ss:

On this_____day of_____,_____, before me personally appeared _____ to me known, and known to me to be one of the members of the firm of _____ _____ described in and who executed the foregoing instrument; and he acknowledged to me that he executed the same as and for the act and deed of said firm.

_____

Notary Public or Commissioner of Deeds

ACKNOWLEDGMENT OF PRINCIPAL, IF AN INDIVIDUAL

State of_____County of_____ss:

On this _____ day of_____,_____, before me personally appeared _____ to me known, and known to me to be the person described in and who executed the foregoing instrument; and acknowledged that he executed the same.

_____

Notary Public or Commissioner of Deeds

Each executed bond should be accompanied by: (a) appropriate acknowledgments of the respective parties; (b) appropriate duly certified copy of Power of Attorney or other certificate of authority where bondis executed by agent, officer or other representative of Principal or Surety; (c) a duly certified extract from By-Laws or resolutions of Surety under which Power of Attorney or other certificate of authority of its agent, officer or representative was issued, and (d) certified copy of latest published financial statement of assets and liabilities of Surety.

* * * * * * * *

Affix Acknowledgments and Justification of Sureties.

ACKNOWLEDGEMENT OF SURETY

State of New Jersey]
|-ss
County of Essex]

On December 31, 2024, before me personally came Adriana Giammichele to me known, who, being by me duly sworn, did depose and say that she is an attorney-in-fact of Liberty Mutual Insurance Company the corporation described in and which executed the within instrument; that she knows the corporate seal of said corporation, and that the seal affixed to the within instrument is such corporate seal, and that she signed the said instrument and affixed the said seal as Attorney-in-Fact by authority of the Board of Directors of said corporation and by authority of this office under the Standing Resolutions thereof.

My Commission expires:

Jami A. Mattson
Notary Public

JAMI A. MATTSON
Notary Public, State of New Jersey
My Commission Expires
July 17, 2025

This Power of Attorney limits the acts of those named herein, and they have no authority to bind the Company except in the manner and to the extent herein stated.

Liberty Mutual. SURETY

Liberty Mutual Insurance Company
The Ohio Casualty Insurance Company
West American Insurance Company

Certificate No: **8211045 - 973841**

POWER OF ATTORNEY

KNOWN ALL PERSONS BY THESE PRESENTS: That The Ohio Casualty Insurance Company is a corporation duly organized under the laws of the State of New Hampshire, that Liberty Mutual Insurance Company is a corporation duly organized under the laws of the State of Massachusetts, and West American Insurance Company is a corporation duly organized under the laws of the State of Indiana (herein collectively called the "Companies"), pursuant to and by authority herein set forth, does hereby name, constitute and appoint, Adriana Giammichele, Joseph W. Mallory, Lisa Nosal, Louis A. Vlahakes, Pamela J. Boyle, Robert E. Culnen

all of the city of Totowa state of NJ each individually if there be more than one named, its true and lawful attorney-in-fact to make, execute, seal, acknowledge and deliver, for and on its behalf as surety and as its act and deed, any and all undertakings, bonds, recognizances and other surety obligations, in pursuance of these presents and shall be as binding upon the Companies as if they have been duly signed by the president and attested by the secretary of the Companies in their own proper persons.

IN WITNESS WHEREOF, this Power of Attorney has been subscribed by an authorized officer or official of the Companies and the corporate seals of the Companies have been affixed thereto this 4th day of December, 2023.

LIBERTY MUTUAL INSURANCE COMPANY INCORPORATED 1912 MASSACHUSETTS — THE OHIO CASUALTY INSURANCE COMPANY INCORPORATED 1919 NEW HAMPSHIRE — WEST AMERICAN INSURANCE COMPANY INCORPORATED 1991 INDIANA

Liberty Mutual Insurance Company
The Ohio Casualty Insurance Company
West American Insurance Company

By: David M. Carey, Assistant Secretary

State of PENNSYLVANIA
County of MONTGOMERY ss

On this 4th day of December, 2023 before me personally appeared David M. Carey, who acknowledged himself to be the Assistant Secretary of Liberty Mutual Insurance Company, The Ohio Casualty Company, and West American Insurance Company, and that he, as such, being authorized so to do, execute the foregoing instrument for the purposes therein contained by signing on behalf of the corporations by himself as a duly authorized officer.

IN WITNESS WHEREOF, I have hereunto subscribed my name and affixed my notarial seal at Plymouth Meeting, Pennsylvania, on the day and year first above written.

TERESA PASTELLA COMMONWEALTH OF PENNSYLVANIA NOTARY PUBLIC

Commonwealth of Pennsylvania - Notary Seal
Teresa Pastella, Notary Public
Montgomery County
My commission expires March 28, 2025
Commission number 1126044
Member, Pennsylvania Association of Notaries

By: Teresa Pastella, Notary Public

This Power of Attorney is made and executed pursuant to and by authority of the following By-laws and Authorizations of The Ohio Casualty Insurance Company, Liberty Mutual Insurance Company, and West American Insurance Company which resolutions are now in full force and effect reading as follows:

ARTICLE IV – OFFICERS: Section 12. Power of Attorney.
Any officer or other official of the Corporation authorized for that purpose in writing by the Chairman or the President, and subject to such limitation as the Chairman or the President may prescribe, shall appoint such attorneys-in-fact, as may be necessary to act in behalf of the Corporation to make, execute, seal, acknowledge and deliver as surety any and all undertakings, bonds, recognizances and other surety obligations. Such attorneys-in-fact, subject to the limitations set forth in their respective powers of attorney, shall have full power to bind the Corporation by their signature and execution of any such instruments and to attach thereto the seal of the Corporation. When so executed, such instruments shall be as binding as if signed by the President and attested to by the Secretary. Any power or authority granted to any representative or attorney-in-fact under the provisions of this article may be revoked at any time by the Board, the Chairman, the President or by the officer or officers granting such power or authority.

ARTICLE XIII– Execution of Contracts: Section 5. Surety Bonds and Undertakings.
Any officer of the Company authorized for that purpose in writing by the chairman or the president, and subject to such limitations as the chairman or the president may prescribe, shall appoint such attorneys-in-fact, as may be necessary to act in behalf of the Company to make, execute, seal, acknowledge and deliver as surety any and all undertakings, bonds, recognizances and other surety obligations. Such attorneys-in-fact subject to the limitations set forth in their respective powers of attorney, shall have full power to bind the Company by their signature and execution of any such instruments and to attach thereto the seal of the Company. When so executed such instruments shall be as binding as if signed by the president and attested by the secretary.

Certificate of Designation– The President of the Company, acting pursuant to the Bylaws of the Company, authorizes David M. Carey, Assistant Secretary to appoint such attorneys-in-fact as may be necessary to act on behalf of the Company to make, execute, seal, acknowledge and deliver as surety any and all undertakings, bonds, recognizances and other surety obligations.

Authorization– By unanimous consent of the Company's Board of Directors, the Company consents that facsimile or mechanically reproduced signature of any assistant secretary of the Company, wherever appearing upon a certified copy of any power of attorney issued by the Company in connection with surety bonds, shall be valid and binding upon the Company with the same force and effect as though manually affixed.

I, Renee C. Llewellyn, the undersigned, Assistant Secretary, The Ohio Casualty Insurance Company, Liberty Mutual Insurance Company, and West American Insurance Company do hereby certify that the original power of attorney of which the foregoing is a full, true and correct copy of the Power of Attorney executed by said Companies, is in full force and effect and has not been revoked.

IN TESTIMONY WHEREOF, I have hereunto set my hand and affixed the seals of said Companies this 31st day of December, 2024.

LIBERTY MUTUAL INSURANCE COMPANY INCORPORATED 1912 MASSACHUSETTS — THE OHIO CASUALTY INSURANCE COMPANY INCORPORATED 1919 NEW HAMPSHIRE — WEST AMERICAN INSURANCE COMPANY INCORPORATED 1991 INDIANA

By: Renee C. Llewellyn, Assistant Secretary

Not valid for mortgage, note, loan, letter of credit, currency rate, interest rate or residual value guarantees.

For bond and/or Power of Attorney (POA) verification inquiries, please call 610-832-8240 or email

Liberty Mutual. SURETY

LIBERTY MUTUAL INSURANCE COMPANY

FINANCIAL STATEMENT – DECEMBER 31, 2023

Assets	
Cash and Bank Deposits	$1,850,245,073.00
*Bonds – U.S Government	$3,859,565,383.00
*Other Bonds	$21,048,805,773.00
*Stocks	$19,937,271,802.00
Real Estate	$122,228,711.00
Agents' Balances or Uncollected Premiums	$8,208,660,427.00
Accrued Interest and Rents	$186,906,667.00
Other Admitted Assets	$15,677,869,683.63
Total Admitted Assets	**$70,891,553,519.63**

Liabilities	
Unearned Premiums	$10,298,963,305.00
Reserve for Claims and Claims Expense	$28,848,537,243.00
Funds Held Under Reinsurance Treaties	$360,714,151.00
Reserve for Dividends to Policyholders	$1,310,198.00
Additional Statutory Reserve	$296,126,000.00
Reserve for Commissions, Taxes and Other Liabilities	$7,622,413,466.63
Total	**$47,428,064,363.63**
Special Surplus Funds	$209,508,757.00
Capital Stock	$10,000,075.00
Paid in Surplus	$13,834,867,488.00
Unassigned Surplus	$9,409,112,836.00
Surplus to Policyholders	$23,463,489,156.00
Total Liabilities and Surplus	**$70,891,553,519.63**

* Bonds are stated at amortized or investment value; Stocks at Association Market Values.
The foregoing financial information is taken from Liberty Mutual Insurance Company's financial statement filed with the Massachusetts Department of Insurance.

I, TIM MIKOLAJEWSKI, Assistant Secretary of Liberty Mutual Insurance Company, do hereby certify that the foregoing is a true, and correct statement of the Assets and Liabilities of said Corporation, as of December 31, 2023, to the best of my knowledge and belief.

IN WITNESS WHEREOF, I have hereunto set my hand and affixed the seal of said Corporation at Seattle, Washington, this 8th day of March, 2024.

LIBERTY MUTUAL INSURANCE COMPANY INCORPORATED 1912 MASSACHUSETTS

Timothy A. Mikolajewski

Timothy A. Mikolajewski, Assistant Secretary

LMS-1262/LMIC

Client#: 355689 JRCRUZCORP

ACORD™

CERTIFICATE OF LIABILITY INSURANCE

DATE (MM/DD/YYYY) 12/30/2024

THIS CERTIFICATE IS ISSUED AS A MATTER OF INFORMATION ONLY AND CONFERS NO RIGHTS UPON THE CERTIFICATE HOLDER. THIS CERTIFICATE DOES NOT AFFIRMATIVELY OR NEGATIVELY AMEND, EXTEND OR ALTER THE COVERAGE AFFORDED BY THE POLICIES BELOW. THIS CERTIFICATE OF INSURANCE DOES NOT CONSTITUTE A CONTRACT BETWEEN THE ISSUING INSURER(S), AUTHORIZED REPRESENTATIVE OR PRODUCER, AND THE CERTIFICATE HOLDER.

IMPORTANT: If the certificate holder is an ADDITIONAL INSURED, the policy(ies) must have ADDITIONAL INSURED provisions or be endorsed. If SUBROGATION IS WAIVED, subject to the terms and conditions of the policy, certain policies may require an endorsement. A statement on this certificate does not confer any rights to the certificate holder in lieu of such endorsement(s).

PRODUCER
Conner Strong & Buckelew
32 Old Slip, Suite 3204
New York, NY 10005
877 861-3220

CONTACT NAME: Eamonn O'Toole
PHONE (A/C, No, Ext): 646-891-4984 FAX (A/C, No): 856-291-9679
E-MAIL ADDRESS: eotoole@connerstrong.com

INSURER(S) AFFORDING COVERAGE	NAIC #
INSURER A : Starr Indemnity & Liability Company	38318
INSURER B : Arch Specialty Ins Co	21199
INSURER C : Gotham Insurance Company	25569
INSURER D : Westfield Specialty Insurance Company	16992
INSURER E : NY State Insurance Fund	36102
INSURER F : Navigators Insurance Company	42307

INSURED
JRCRUZ Corp.
33 West Main Street
Holmdel, NJ 07733

COVERAGES CERTIFICATE NUMBER: REVISION NUMBER:

THIS IS TO CERTIFY THAT THE POLICIES OF INSURANCE LISTED BELOW HAVE BEEN ISSUED TO THE INSURED NAMED ABOVE FOR THE POLICY PERIOD INDICATED. NOTWITHSTANDING ANY REQUIREMENT, TERM OR CONDITION OF ANY CONTRACT OR OTHER DOCUMENT WITH RESPECT TO WHICH THIS CERTIFICATE MAY BE ISSUED OR MAY PERTAIN, THE INSURANCE AFFORDED BY THE POLICIES DESCRIBED HEREIN IS SUBJECT TO ALL THE TERMS, EXCLUSIONS AND CONDITIONS OF SUCH POLICIES. LIMITS SHOWN MAY HAVE BEEN REDUCED BY PAID CLAIMS.

INSR LTR	TYPE OF INSURANCE	ADDL INSR	SUBR WVD	POLICY NUMBER	POLICY EFF (MM/DD/YYYY)	POLICY EXP (MM/DD/YYYY)	LIMITS	
A	X COMMERCIAL GENERAL LIABILITY			1000090014241	07/01/2024	07/01/2025	EACH OCCURRENCE	$2,000,000
	CLAIMS-MADE X OCCUR						DAMAGE TO RENTED PREMISES (Ea occurrence)	$1,000,000
							MED EXP (Any one person)	$10,000
							PERSONAL & ADV INJURY	$2,000,000
	GEN'L AGGREGATE LIMIT APPLIES PER:						GENERAL AGGREGATE	$4,000,000
	POLICY X PRO-JECT LOC						PRODUCTS - COMP/OP AGG	$4,000,000
	OTHER:							$
A	AUTOMOBILE LIABILITY			1000635864241	07/01/2024	07/01/2025	COMBINED SINGLE LIMIT (Ea accident)	$2,000,000
	X ANY AUTO						BODILY INJURY (Per person)	$
	OWNED AUTOS ONLY / SCHEDULED AUTOS						BODILY INJURY (Per accident)	$
	X HIRED AUTOS ONLY / X NON-OWNED AUTOS ONLY						PROPERTY DAMAGE (Per accident)	$
								$
B	UMBRELLA LIAB X OCCUR			UXP105265901	07/01/2024	07/01/2025	EACH OCCURRENCE	$3,000,000
	X EXCESS LIAB CLAIMS-MADE						AGGREGATE	$3,000,000
	DED RETENTION $							$
A	WORKERS COMPENSATION AND EMPLOYERS' LIABILITY Y / N	N / A		1000004664 (NJ)	07/01/2024	07/01/2025	X PER STATUTE OTH-ER	
	ANY PROPRIETOR/PARTNER/EXECUTIVE OFFICER/MEMBER EXCLUDED? N (Mandatory in NH) If yes, describe under DESCRIPTION OF OPERATIONS below						E.L. EACH ACCIDENT	$1,000,000
							E.L. DISEASE - EA EMPLOYEE	$1,000,000
							E.L. DISEASE - POLICY LIMIT	$1,000,000
C	Excess Liability 2nd Layer			EX202400003677	07/01/2024	07/01/2025	Per Occ $5,000,000 Aggregate $5,000,000	

DESCRIPTION OF OPERATIONS / LOCATIONS / VEHICLES (ACORD 101, Additional Remarks Schedule, may be attached if more space is required)

D. Excess Liability - 3rd layer
Carrier: Westfield Specialty Insurance Company (NAIC 16992)
Policy # XSL337811H00
Policy Term: 07/01/2024 - 07/01/2025
Limits: 2,000,000 Occurrence / $2,000,000 Aggregate
(See Attached Descriptions)

CERTIFICATE HOLDER

New York City Department of
Design and Construction
30-30 Thomson Avenue
Long Island City, NY 11101

CANCELLATION

SHOULD ANY OF THE ABOVE DESCRIBED POLICIES BE CANCELLED BEFORE THE EXPIRATION DATE THEREOF, NOTICE WILL BE DELIVERED IN ACCORDANCE WITH THE POLICY PROVISIONS.

AUTHORIZED REPRESENTATIVE

W. Michael Traynor

© 1988-2015 ACORD CORPORATION. All rights reserved.

DESCRIPTIONS (Continued from Page 1)

E. Workers Compensation (NY) [For Reference Only]
Carrier: NY State Insurance Fund (NAIC 36102)
Policy #Z13237946
Policy Term: 04/01/2024 - 04/01/2025
Limits: Unlimited

F. Contractors Pollution Liability
Carrier: Navigators Insurance Company (NAIC 42307)
Policy #GA24ECPZ08ST3IV
Policy Term: 07/01/2024 - 07/01/2025
Limits: $10,000,000 Per Occ./Aggregate

G. Professional Liability
Carrier: Columbia Casualty Company (NAIC 31127)
Policy #CEO7018194301
Policy Term: 07/01/2024 - 07/01/2025
Limits: $1,000,000 Per Claim

RE: EC-SER25.

City of New York, including its officials and employees, National Grid USA are Additional Insureds on a primary and non-contributory basis on the above-referenced Commercial General Liability Policy if required by written contract.

A waiver of subrogation applies as required by written contract and permitted by law.

NEW YORK STATE | Workers' Compensation Board

CERTIFICATE OF INSURANCE COVERAGE
NYS DISABILITY AND PAID FAMILY LEAVE BENEFITS LAW

PART 1. To be completed by NYS disability and Paid Family Leave benefits carrier or licensed insurance agent of that carrier

1a. Legal Name & Address of Insured (use street address only) JRCRUZ CORP. 33 WEST MAIN STREET HOLMDEL, NJ 07733 Work Location of Insured *(Only required if coverage is specifically limited to certain locations in New York State, i.e., Wrap-Up Policy)*	1b. Business Telephone Number of Insured 7325834971 1c. Federal Employer Identification Number of Insured or Social Security Number 223373796, 223807278, 223830212
2. Name and Address of Entity Requesting Proof of Coverage (Entity Being Listed as the Certificate Holder) NYC Department of Design and Construction 30-30 Thompson Avenue 4th Floor (IDCNY Building) Long Island City, NY 11101	3a. Name of Insurance Carrier **The Guardian Life Insurance Company of America** 3b. Policy Number of Entity Listed in Box 1a 00952226 3c. Policy Effective Period 07/01/2023 to 07/01/2025

4. Policy provides the following benefits:
   - [x] A. Both disability and Paid Family Leave benefits.
   - [ ] B. Disability benefits only.
   - [ ] C. Paid Family Leave benefits only.
5. Policy covers:
   - [x] A. All of the employer's employees eligible under the NYS Disability and Paid Family Leave Benefits Law.
   - [ ] B. Only the following class or classes of employer's employees:

Under penalty of perjury, I certify that I am an authorized representative or licensed agent of the insurance carrier referenced above and that the named insured has NYS disability and/or Paid Family Leave benefits insurance coverage as described above.

Date Signed 06/25/2024 By _____
(Signature of insurance carrier's authorized representative or NYS licensed insurance agent of that insurance carrier)

Telephone Number 1-888-278-4542 Name and Title Michael Prestileo, Head of Group Benefits Strategy, Product & Underwriting

IMPORTANT: If Boxes 4A and 5A are checked, and this form is signed by the insurance carrier's authorized representative or NYS Licensed Insurance Agent of that carrier, this certificate is COMPLETE. Mail it directly to the certificate holder.

If Box 4B, 4C or 5B is checked, this certificate is NOT COMPLETE for purposes of Section 220, Subd. 8 of the NYS Disability and Paid Family Leave Benefits Law. It must be emailed to PAU@wcb.ny.gov or it can be mailed for completion to the Workers' Compensation Board, Plans Acceptance Unit, PO Box 5200, Binghamton, NY 13902-5200.

PART 2. To be completed by the NYS Workers' Compensation Board (Only if Box 4B, 4C or 5B have been checked)

State of New York
Workers' Compensation Board

According to information maintained by the NYS Workers' Compensation Board, the above-named employer has complied with the NYS Disability and Paid Family Leave Benefits Law(Article 9 of the Workers' Compensation Law) with respect to all of their employees.

Date Signed _____ By _____
(Signature of Authorized NYS Workers' Compensation Board Employee)

Telephone Number _____ Name and Title _____

Please Note: *Only insurance carriers licensed to write NYS disability and Paid Family Leave benefits insurance policies and NYS licensed insurance agents of those insurance carriers are authorized to issue Form DB-120.1.* ***Insurance brokers are NOT authorized to issue this form.***

Additional Instructions for Form DB-120.1

By signing this form, the insurance carrier identified in Box 3 on this form is certifying that it is insuring the business referenced in Box 1a for disability and/or Paid Family Leave benefits under the NYS Disability and Paid Family Leave Benefits Law. The insurance carrier or its licensed agent will send this Certificate of Insurance Coverage (Certificate) to the entity listed as the certificate holder in Box 2.

The insurance carrier must notify the above certificate holder and the Workers' Compensation Board within 10 days IF a policy is cancelled due to nonpayment of premiums or within 30 days IF there are reasons other than nonpayment of premiums that cancel the policy or eliminate the insured from coverage indicated on this Certificate. (These notices may be sent by regular mail.) Otherwise, this Certificate is valid for one year after this form is approved by the insurance carrier or its licensed agent, or until the policy expiration date listed in Box 3c, whichever is earlier.

This Certificate is issued as a matter of information only and confers no rights upon the certificate holder. This Certificate does not amend, extend or alter the coverage afforded by the policy listed, nor does it confer any rights or responsibilities beyond those contained in the referenced policy.

This Certificate may be used as evidence of a NYS disability and/or Paid Family Leave benefits contract of insurance only while the underlying policy is in effect.

Please Note: Upon the cancellation of the disability and/or Paid Family Leave benefits policy indicated on this form, if the business continues to be named on a permit, license or contract issued by a certificate holder, the business must provide that certificate holder with a new Certificate of Insurance Coverage for NYS disability and/ or Paid Family Leave Benefits or other authorized proof that the business is complying with the mandatory coverage requirements of the NYS Disability and Paid Family Leave Benefits Law.

NYS DISABILITY AND PAID FAMILY LEAVE BENEFITS LAW

§220. Subd. 8

(a) The head of a state or municipal department, board, commission or office authorized or required by law to issue any permit for or in connection with any work involving the employment of employees in employment as defined in this article, and not withstanding any general or special statute requiring or authorizing the issue of such permits, shall not issue such permit unless proof duly subscribed by an insurance carrier is produced in a form satisfactory to the chair, that the payment of disability benefits and after January first, two thousand and twenty-one, the payment of family leave benefits for all employees has been secured as provided by this article. Nothing herein, however, shall be construed as creating any liability on the part of such state or municipal department, board, commission or office to pay any disability benefits to any such employee if so employed.

(b) The head of a state or municipal department, board, commission or office authorized or required by law to enter into any contract for or in connection with any work involving the employment of employees in employment as defined in this article and notwithstanding any general or special statute requiring or authorizing any such contract, shall not enter into any such contract unless proof duly subscribed by an insurance carrier is produced in a form satisfactory to the chair, that the payment of disability benefits and after January first, two thousand eighteen, the payment of family leave benefits for all employees has been secured as provided by this article.

NYSIF
New York State Insurance Fund

PO Box 66699, Albany, NY 12206
| nysif.com

CERTIFICATE OF WORKERS' COMPENSATION INSURANCE

^ ^ ^ ^ ^ ^ 223373796

LOVELL SAFETY MGMT CO., LLC
22 CORTLANDT STREET 33RD FLR
NEW YORK NY 10007

SCAN TO VALIDATE
AND SUBSCRIBE

POLICYHOLDER	CERTIFICATE HOLDER (IDCNY BUILDING)
JRCRUZ CORP. 33 WEST MAIN STREET HOLMDEL NJ 07733	CITY OF NEW YORK DEPARTMENT OF DESIGN & CONSTRUCTION 30-30 THOMSON AVENUE 4TH FLOOR LONG ISLAND CITY NY 11101

POLICY NUMBER	CERTIFICATE NUMBER	POLICY PERIOD	DATE
Z 1323 794-6	389159	04/01/2024 TO 04/01/2025	03/07/2024

THIS IS TO CERTIFY THAT THE POLICYHOLDER NAMED ABOVE IS INSURED WITH THE NEW YORK STATE INSURANCE FUND UNDER POLICY NO. 1323 794-6, COVERING THE ENTIRE OBLIGATION OF THIS POLICYHOLDER FOR WORKERS' COMPENSATION UNDER THE NEW YORK WORKERS' COMPENSATION LAW WITH RESPECT TO ALL OPERATIONS IN THE STATE OF NEW YORK, EXCEPT AS INDICATED BELOW.

IF YOU WISH TO RECEIVE NOTIFICATIONS REGARDING SAID POLICY, INCLUDING ANY NOTIFICATION OF CANCELLATIONS, OR TO VALIDATE THIS CERTIFICATE, VISIT OUR WEBSITE AT HTTPS://WWW.NYSIF.COM/CERT/CERTVAL.ASP. THE NEW YORK STATE INSURANCE FUND IS NOT LIABLE IN THE EVENT OF FAILURE TO GIVE SUCH NOTIFICATIONS.

THIS CERTIFICATE DOES NOT APPLY TO THOSE JOB SITES WHICH ARE COVERED BY OTHER INSURANCE AND ARE SPECIFICALLY EXCLUDED BY ENDORSEMENT.

THE POLICY INCLUDES A WAIVER OF SUBROGATION ENDORSEMENT UNDER WHICH NYSIF AGREES TO WAIVE ITS RIGHT OF SUBROGATION TO BRING AN ACTION AGAINST THE CERTIFICATE HOLDER TO RECOVER AMOUNTS WE PAID IN WORKERS' COMPENSATION AND/OR MEDICAL BENEFITS TO OR ON BEHALF OF AN EMPLOYEE OF OUR INSURED IN THE EVENT THAT, PRIOR TO THE DATE OF THE ACCIDENT, THE CERTIFICATE HOLDER HAS ENTERED INTO A WRITTEN CONTRACT WITH OUR INSURED THAT REQUIRES THAT SUCH RIGHT OF SUBROGATION BE WAIVED.

THIS CERTIFICATE IS ISSUED AS A MATTER OF INFORMATION ONLY AND CONFERS NO RIGHTS NOR INSURANCE COVERAGE UPON THE CERTIFICATE HOLDER. THIS CERTIFICATE DOES NOT AMEND, EXTEND OR ALTER THE COVERAGE AFFORDED BY THE POLICY.

NEW YORK STATE INSURANCE FUND

DIRECTOR, INSURANCE FUND UNDERWRITING

VALIDATION NUMBER: 674091171

0000000000001250280 90

THIS ENDORSEMENT CHANGES THE POLICY. PLEASE READ IT CAREFULLY.

ADDITIONAL INSURED – OWNERS, LESSEES OR CONTRACTORS – SCHEDULED PERSON OR ORGANIZATION

This endorsement modifies insurance provided under the following:

COMMERCIAL GENERAL LIABILITY COVERAGE PART

SCHEDULE

Name Of Additional Insured Person(s) Or Organization(s)	Location(s) Of Covered Operations
Where Required By Written Contract	Where Required By Written Contract
Information required to complete this Schedule, if not shown above, will be shown in the Declarations.	

A. **Section II – Who Is An Insured** is amended to include as an additional insured the person(s) or organization(s) shown in the Schedule, but only with respect to liability for "bodily injury", "property damage" or "personal and advertising injury" caused, in whole or in part, by:

1. Your acts or omissions; or

2. The acts or omissions of those acting on your behalf;

in the performance of your ongoing operations for the additional insured(s) at the location(s) designated above.

However:

1. The insurance afforded to such additional insured only applies to the extent permitted by law; and

2. If coverage provided to the additional insured is required by a contract or agreement, the insurance afforded to such additional insured will not be broader than that which you are required by the contract or agreement to provide for such additional insured.

B. With respect to the insurance afforded to these additional insureds, the following additional exclusions apply:

This insurance does not apply to "bodily injury" or "property damage" occurring after:

1. All work, including materials, parts or equipment furnished in connection with such work, on the project (other than service, maintenance or repairs) to be performed by or on behalf of the additional insured(s) at the location of the covered operations has been completed; or

2. That portion of "your work" out of which the injury or damage arises has been put to its intended use by any person or organization other than another contractor or subcontractor engaged in performing operations for a principal as a part of the same project.

C. With respect to the insurance afforded to these additional insureds, the following is added to **Section III – Limits Of Insurance:**

If coverage provided to the additional insured is required by a contract or agreement, the most we will pay on behalf of the additional insured is the amount of insurance:

1. Required by the contract or agreement; or

2. Available under the applicable limits of insurance;

whichever is less.

This endorsement shall not increase the applicable limits of insurance.

© Insurance Services Office, Inc., 2018

THIS ENDORSEMENT CHANGES THE POLICY. PLEASE READ IT CAREFULLY.

ADDITIONAL INSURED – OWNERS, LESSEES OR CONTRACTORS – COMPLETED OPERATIONS

This endorsement modifies insurance provided under the following:

COMMERCIAL GENERAL LIABILITY COVERAGE PART
PRODUCTS/COMPLETED OPERATIONS LIABILITY COVERAGE PART

SCHEDULE

Name Of Additional Insured Person(s) Or Organization(s)	Location And Description Of Completed Operations
Where Required By Written Contract	Where Required By Written Contract
Information required to complete this Schedule, if not shown above, will be shown in the Declarations.	

A. **Section II – Who Is An Insured** is amended to include as an additional insured the person(s) or organization(s) shown in the Schedule, but only with respect to liability for "bodily injury" or "property damage" caused, in whole or in part, by "your work" at the location designated and described in the Schedule of this endorsement performed for that additional insured and included in the "products-completed operations hazard".
However:
1. The insurance afforded to such additional insured only applies to the extent permitted by law; and
2. If coverage provided to the additional insured is required by a contract or agreement, the insurance afforded to such additional insured will not be broader than that which you are required by the contract or agreement to provide for such additional insured.

B. With respect to the insurance afforded to these additional insureds, the following is added to **Section III – Limits Of Insurance:**
If coverage provided to the additional insured is required by a contract or agreement, the most we will pay on behalf of the additional insured is the amount of insurance:
1. Required by the contract or agreement; or
2. Available under the applicable limits of insurance;
whichever is less.
This endorsement shall not increase the applicable limits of insurance.

© Insurance Services Office, Inc., 2018

THIS ENDORSEMENT CHANGES THE POLICY. PLEASE READ IT CAREFULLY.

ADDITIONAL INSURED – DESIGNATED PERSON OR ORGANIZATION

This endorsement modifies insurance provided under the following:

COMMERCIAL GENERAL LIABILITY COVERAGE PART

SCHEDULE

Name Of Additional Insured Person(s) Or Organization(s):
Where required by written contract or where required in connection with a written contract.
Information required to complete this Schedule, if not shown above, will be shown in the Declarations.

A. **Section II – Who Is An Insured** is amended to include as an additional insured the person(s) or organization(s) shown in the Schedule, but only with respect to liability for "bodily injury", "property damage" or "personal and advertising injury" caused, in whole or in part, by your acts or omissions or the acts or omissions of those acting on your behalf:

1. In the performance of your ongoing operations; or

2. In connection with your premises owned by or rented to you.

However:

1. The insurance afforded to such additional insured only applies to the extent permitted by law; and

2. If coverage provided to the additional insured is required by a contract or agreement, the insurance afforded to such additional insured will not be broader than that which you are required by the contract or agreement to provide for such additional insured.

B. With respect to the insurance afforded to these additional insureds, the following is added to **Section III – Limits Of Insurance:**

If coverage provided to the additional insured is required by a contract or agreement, the most we will pay on behalf of the additional insured is the amount of insurance:

1. Required by the contract or agreement; or

2. Available under the applicable limits of insurance;

whichever is less.

This endorsement shall not increase the applicable limits of insurance.

© Insurance Services Office, Inc., 2012

THIS ENDORSEMENT CHANGES THE POLICY. PLEASE READ IT CAREFULLY.

POLLUTION LIABILITY – BROADENED COVERAGE FOR COVERED AUTOS – BUSINESS AUTO AND MOTOR CARRIER COVERAGE FORMS

This endorsement modifies insurance provided under the following:

BUSINESS AUTO COVERAGE FORM
MOTOR CARRIER COVERAGE FORM

With respect to coverage provided by this endorsement, the provisions of the Coverage Form apply unless modified by the endorsement.

A. Covered Autos Liability Coverage is changed as follows:

1. Paragraph **a.** of the **Pollution** Exclusion applies only to liability assumed under a contract or agreement.

2. With respect to the coverage afforded by Paragraph **A.1.** above, Exclusion **B.6. Care, Custody Or Control** does not apply.

B. Changes In Definitions

For the purposes of this endorsement, Paragraph **D.** of the **Definitions** Section is replaced by the following:

D. "Covered pollution cost or expense" means any cost or expense arising out of:

1. Any request, demand, order or statutory or regulatory requirement that any "insured" or others test for, monitor, clean up, remove, contain, treat, detoxify or neutralize, or in any way respond to, or assess the effects of "pollutants"; or

2. Any claim or "suit" by or on behalf of a governmental authority for damages because of testing for, monitoring, cleaning up, removing, containing, treating, detoxifying or neutralizing, or in any way responding to or assessing the effects of "pollutants".

"Covered pollution cost or expense" does not include any cost or expense arising out of the actual, alleged or threatened discharge, dispersal, seepage, migration, release or escape of "pollutants":

a. Before the "pollutants" or any property in which the "pollutants" are contained are moved from the place where they are accepted by the "insured" for movement into or onto the covered "auto"; or

b. After the "pollutants" or any property in which the "pollutants" are contained are moved from the covered "auto" to the place where they are finally delivered, disposed of or abandoned by the "insured".

Paragraphs **a.** and **b.** above do not apply to "accidents" that occur away from premises owned by or rented to an "insured" with respect to "pollutants" not in or upon a covered "auto" if:

(1) The "pollutants" or any property in which the "pollutants" are contained are upset, overturned or damaged as a result of the maintenance or use of a covered "auto"; and

(2) The discharge, dispersal, seepage, migration, release or escape of the "pollutants" is caused directly by such upset, overturn or damage.

 © Insurance Services Office, Inc., 2011

CITY OF NEW YORK

CERTIFICATION BY INSURANCE BROKER OR AGENT

The undersigned insurance broker or agent represents to the City of New York that the attached Certificate of Insurance is accurate in all material respects.

Conner Strong & Buckelew

[Name of broker or agent (typewritten)]

32 Old Slip, Suite 3204, New York NY 10005

[Address of broker or agent (typewritten)]

etoole@connerstrong.com

[Email address of broker or agent (typewritten)]

646-891-4984

[Phone number/Fax number of broker or agent (typewritten)]

Eamonn O'Toole

[Signature of authorized official, broker, or agent]

Eamonn O'Toole, Account Analyst

[Name and title of authorized official, broker, or agent (typewritten)]

State of New York)
County of Westchester) ss.:

Sworn to before me this 30 day of December 2024

Sarah Mezher

NOTARY PUBLIC FOR THE STATE OF New York.

SARAH MEZHER
Notary Public - State of New York
No. 01ME0014767
Qualified in Westchester County
My Commission Expires 10/23/2027

IN WITNESS WHEREOF, the Commissioner, on behalf of the City of New York, and the Contractor, have executed this agreement in quadruplicate, two parts of which are to remain with the Commissioner, another to be filed with the Comptroller of the City, and the fourth to be delivered to the Contractor.

THE CITY OF NEW YORK

By: _____
F/D/ Commissioner

CONTRACTOR:

By: _____
(Member of Firm or Officer of Corporation)

Title: Peter Lauro, President

(Where Contractor is a Corporation, add):
Attest:

_____
Secretary

(Seal)

Matthew J. Cruz

LABOR LAW ARTICLE 8 - NYC PUBLIC WORKS

Workers, Laborers and Mechanics employed on a public work project must receive not less than the prevailing rate of wage and benefits for the classification of work performed by each upon such public work. Pursuant to New York Labor Law Article 8 the Comptroller of the City of New York has promulgated this schedule solely for Workers, Laborers and Mechanics engaged by private contractors on New York City public work projects. Prevailing rates are required to be annexed to and form part of the public work contract pursuant to Labor Law section 220 (3).

This schedule is a compilation of separate determinations of the prevailing rate of wage and supplements made by the Comptroller for each trade classification listed herein pursuant to Labor Law section 220 (5). The source of the wage and supplement rates, whether a collective bargaining agreement, survey data or other, is listed at the end of each classification.

Agency Chief Contracting Officers should contact the Bureau of Labor Law's Classification Unit with any questions concerning trade classifications, prevailing rates or prevailing practices with respect to procurement on New York City public work contracts. Contractors are advised to review the Comptroller's Prevailing Wage Schedule before bidding on public work contracts. Contractors with questions concerning trade classifications, prevailing rates or prevailing practices with respect to public work contracts in the procurement stage must contact the contracting agency responsible for the procurement.

Any error as to compensation under the prevailing wage law or other information as to trade classification, made by the contracting agency in the contract documents or in any other communication, will not preclude a finding against the contractor of prevailing wage violation.

Any questions concerning trade classifications, prevailing rates or prevailing practices on New York City public work contracts that have already been awarded may be directed to the Bureau of Labor Law's Classification Unit by calling (212) 669-4443. All callers must have the agency name and contract registration number available when calling with questions on public work contracts. Please direct all other compliance issues to: laborlaw@comptroller.nyc.gov or Bureau of Labor Law, Attn: Paul Brumlik, Office of the Comptroller, 1 Centre Street, Room 651, New York, N.Y. 10007.

Pursuant to Labor Law § 220 (3-a) (a), the appropriate schedule of prevailing wages and benefits must be posted in a prominent and accessible place at all public work sites along with the Construction Poster provided on our web site at comptroller.nyc.gov/wages. In addition, covered employees must be given the appropriate schedule of prevailing wages and benefits along with the Worker Notice provided on our web site at the time the public work project begins, and with the first paycheck to each such employee after July first of each year.

This schedule is applicable to work performed during the effective period, unless otherwise noted. Changes to this schedule are published on our web site comptroller.nyc.gov/wages. Contractors must pay the wages and supplements in effect when the worker, laborer, mechanic performs the work. Preliminary schedules for future one-year periods appear in the City Record on or about June 1 each succeeding year. Final schedules appear on or about July 1 in the City Record and on our web site comptroller.nyc.gov/wages.

Prevailing rates and ratios for apprentices are published in the Construction Apprentice Prevailing Wage Schedule. Pursuant to Labor Law § 220 (3-e), only apprentices who are individually registered in a bona fide program to which the employer contractor is a participant, registered with the

New York State Department of Labor, may be paid at the apprentice rates. Apprentices who are not so registered must be paid as journey persons.

New York City public work projects awarded pursuant to a Project Labor Agreement ("PLA") in accordance with Labor Law section 222 may have different labor standards for shift, premium and overtime work. Please refer to the PLA's pre-negotiated labor agreements for wage and benefit rates applicable to work performed outside of the regular workday. More information is available at the Mayor's Office of Contract Services (MOCS) web page at:

https://www1.nyc.gov/site/mocs/legal-forms/project-labor-agreements.page

All the provisions of Labor Law Article 8 remain applicable to PLA work including, but not limited to, the enforcement of prevailing wage requirements by the Comptroller in accordance with the trade classifications in this schedule; however, we will enforce shift, premium, overtime and other non-standard rates as they appear in a project's pre-negotiated labor agreement.

In order to meet their obligation to provide prevailing supplemental benefits to each covered employee, employers must either:

1) **Provide bona fide fringe benefits which cost the employer no less than the prevailing supplemental benefits rate; or**
2) **Supplement the employee's hourly wage by an amount no less than the prevailing supplemental benefits rate; or**
3) **Provide a combination of bona fide fringe benefits and wage supplements which cost the employer no less than the prevailing supplemental benefits rate in total.**

Although prevailing wage laws do not require employers to provide bona fide fringe benefits (as opposed to wage supplements) to their employees, other laws may. For example, the Employee Retirement Income Security Act, 29 U.S.C. § 1001 et seq., the Patient Protection and Affordable Care Act, 42 U.S.C. § 18001 et seq., and the New York City Paid Sick Leave Law, N.Y.C. Admin. Code § 20-911 et seq., require certain employers to provide certain benefits to their employees. Labor agreements to which employers are a party may also require certain benefits. The Comptroller's Office does not enforce these laws or agreements.

Employers must provide prevailing supplemental benefits at the straight time rate for each hour worked unless otherwise noted in the classification.

Paid Holidays, Vacation and Sick Leave when listed must be paid or provided in addition to the prevailing hourly supplemental benefit rate.

For more information, please refer to the Comptroller's Prevailing Wage Law Regulations in Title 44 of the Rules of the City of New York, Chapter 2, available at comptroller.nyc.gov/wages.

Paul Brumlik
Director of Classifications
Bureau of Labor Law

ADDENDUM

List of Amended Classifications

1. FLAGGER
2. LABORER - HEAVY & HIGHWAY
3. LABORER - PAVER & ROADBUILDER
4. LABORER - PAVER & ROADBUILDER LINE STRIPING (ROADWAY)

TABLE OF CONTENTS

CLASSIFICATION	PAGE
ASBESTOS HANDLER	7
BLASTER	7
BOILERMAKER	8
BRICKLAYER	9
CARPENTER - BUILDING COMMERCIAL	10
CARPENTER - HEAVY CONSTRUCTION WORK	11
CARPENTER - HIGH RISE CONCRETE FORMS	12
CARPENTER - SIDEWALK SHED, SCAFFOLD AND HOIST	13
CARPENTER - WOOD WATER STORAGE TANK	14
CEMENT & CONCRETE WORKER	15
CEMENT MASON	16
CORE DRILLER	17
DERRICKPERSON AND RIGGER	18
DIVER	19
DOCKBUILDER - PILE DRIVER	20
DRIVER: TRUCK (TEAMSTER)	21
ELECTRICIAN	23
ELECTRICIAN - ALARM TECHNICIAN	26
ELECTRICIAN-STREET LIGHTING WORKER	27
ELEVATOR CONSTRUCTOR	28
ELEVATOR REPAIR & MAINTENANCE	29
ENGINEER	30
ENGINEER - CITY SURVEYOR AND CONSULTANT	35
ENGINEER - FIELD (BUILDING CONSTRUCTION)	36
ENGINEER - FIELD (HEAVY CONSTRUCTION)	37
ENGINEER - FIELD (STEEL ERECTION)	38
ENGINEER - OPERATING	39
FLAGGER	47
FLOOR COVERER	48
GLAZIER	49
GLAZIER - REPAIR & MAINTENANCE	49

HAZARDOUS MATERIAL HANDLER 50
HEAT AND FROST INSULATOR 51
HOUSE WRECKER 52
IRON WORKER - ORNAMENTAL 53
IRON WORKER - STRUCTURAL 54
LABORER – HEAVY & HIGHWAY 55
LABORER - PAVER & ROADBUILDER 56
LABORER - PAVER & ROADBUILDER LINE STRIPING (ROADWAY) 57
LANDSCAPING 59
MARBLE MECHANIC 60
MASON TENDER 61
MASON TENDER (INTERIOR DEMOLITION WORKER) 62
METALLIC LATHER 63
MILLWRIGHT 64
MOSAIC MECHANIC 65
PAINTER 66
PAINTER - BRIDGE & STRUCTURAL STEEL 67
PAINTER - METAL POLISHER 68
PAINTER - SIGN 69
PAINTER - STRUCTURAL STEEL ..... **Error! Bookmark not defined.**
PAPERHANGER 70
PAVER AND ROADBUILDER 71
PAVER AND ROADBUILDER - LINE STRIPING (ROADWAY) 71
PLASTERER 71
PLASTERER - TENDER 72
PLUMBER 73
PLUMBER (MECHNICAL EQUIPMENT AND SERVICE) 74
PLUMBER (RESIDENTIAL RATES FOR 1, 2 AND 3 FAMILY HOME CONSTRUCTION) 75
PLUMBER: PUMP & TANK 75
POINTER, WATERPROOFER, CAULKER, SANDBLASTER, STEAMBLASTER 76
ROOFER 77
SHEET METAL WORKER 78
SHEET METAL WORKER - SPECIALTY 79

SHIPYARD WORKER 80
SIGN ERECTOR 81
STEAMFITTER 82
STEAMFITTER - REFRIGERATION AND AIR CONDITIONER 83
STONE MASON - SETTER 84
TAPER 85
TELECOMMUNICATION WORKER 86
TILE FINISHER 87
TILE LAYER - SETTER 88
TIMBERPERSON 88
TUNNEL WORKER 89
WELDER 93

ASBESTOS HANDLER

SEE HAZARDOUS MATERIAL HANDLER

BLASTER

Blaster

Effective Period: 7/1/2024 - 6/30/2025
Wage Rate per Hour: $58.21
Supplemental Benefit Rate per Hour: $54.03

Blaster - Hydraulic Trac Drill

Effective Period: 7/1/2024 - 6/30/2025
Wage Rate per Hour: $52.35
Supplemental Benefit Rate per Hour: $54.03

Blaster - Wagon: Air Trac: Quarry Bar: Drillrunners

Effective Period: 7/1/2024 - 6/30/2025
Wage Rate per Hour: $51.52
Supplemental Benefit Rate per Hour: $54.03

Blaster - Journeyperson

(Laborer, Chipper/Jackhammer including Walk Behind Self Propelled Hydraulic Asphalt and Concrete Breakers and Hydro (Water) Demolition, Powder Carrier, Hydraulic Chuck Tender, Chuck Tender and Nipper)

Effective Period: 7/1/2024 - 6/30/2025
Wage Rate per Hour: $45.00
Supplemental Benefit Rate per Hour: $54.03

Blaster - Magazine Keepers: (Watch Person)

Effective Period: 7/1/2024 - 6/30/2025
Wage Rate per Hour: $22.50
Supplemental Benefit Rate per Hour: $54.03

Overtime

Time and one half the regular rate after an 8 hour day.
Time and one half the regular rate for Saturday.

Double time the regular rate for Sunday.

Overtime Holidays

Double time the regular rate for work on the following holiday(s).
New Year's Day
Memorial Day
Independence Day
Labor Day
Columbus Day
Thanksgiving Day
Christmas Day

Paid Holidays

Labor Day
Thanksgiving Day

Shift Rates

When two shifts are employed, single time rate shall be paid for each shift. When three shifts are found necessary, each shift shall work seven and one half hours (7 ½), but shall be paid for eight (8) hours of labor, and be permitted one half hour for lunch.

(Local #731)

BOILERMAKER

Boilermaker

Effective Period: 7/1/2024 - 6/30/2025
Wage Rate per Hour: $67.38
Supplemental Benefit Rate per Hour: $49.33
Supplemental Note: For time and one half overtime - $73.42 For double overtime - $97.51

Overtime Description

For Repair and Maintenance work:
Time and one half the regular rate after an 8 hour day.
Time and one half the regular rate for Saturday.
Double time the regular rate for Sunday.
For New Construction work:
Double time the regular rate after an 8 hour day.
Double time the regular time rate for Saturday.
Double time the regular rate for Sunday.

Overtime Holidays

Double time the regular rate for work on the following holiday(s).
New Year's Day
President's Day

Memorial Day
Independence Day
Columbus Day
Election Day
Veteran's Day
Thanksgiving Day
Christmas Day

Quadruple time the regular rate for work on the following holiday(s).
Labor Day

Paid Holidays
Good Friday
Day after Thanksgiving
Day before Christmas
Day before New Year's Day

Shift Rates
On jobs requiring two (2) or three (3) shifts, the first shift shall work eight (8) hours at the regular straight-time hourly rate. The second shift shall work eight (8) hours and receive eight hours at the regular straight time hourly rate plus two dollars ($2.00) per hour. The third shift shall work eight (8) hours and receive eight hours at the regular straight time hourly rate plus two dollars and twenty-five cents ($2.25) per hour.

(Local #5)

BRICKLAYER

Bricklayer

Effective Period: 7/1/2024 - 6/30/2025
Wage Rate per Hour: $59.09
Supplemental Benefit Rate per Hour: $43.05

Overtime Description
Time and one half the regular rate after a 7 hour day. If working on a job that is predominately Pointer, Cleaner, Caulker work, then Time and one half the regular rate after an 8 hour day.

Overtime
Time and one half the regular rate for Saturday.
Double time the regular rate for Sunday.
Saturday may be used as a make-up day at straight time when a day is lost during that week to inclement weather.

Overtime Holidays
Double time the regular rate for work on the following holiday(s).
New Year's Day

President's Day
Memorial Day
Independence Day
Labor Day
Thanksgiving Day
Christmas Day

Paid Holidays
None

Shift Rates
The second shift wage rate shall be a 15% wage premium with no premium for supplemental benefits. There must be a first shift in order to work a second shift. When it is not possible to conduct alteration or repair work during regular working hours in a building occupied by tenants, eight hours will be paid at straight time rate for seven hours of work.

(Bricklayer District Council)

CARPENTER - BUILDING COMMERCIAL

Building Commercial

Effective Period: 7/1/2024 - 6/30/2025
Wage Rate per Hour: $57.05
Supplemental Benefit Rate per Hour: $48.33

Overtime
Time and one half the regular rate after an 8 hour day.
Time and one half the regular rate for Saturday.
Double time the regular rate for Sunday.
Saturday may be used as a make-up day at straight time when a day is lost during that week to inclement weather.

Overtime Holidays
Double time the regular rate for work on the following holiday(s).
New Year's Day
President's Day
Memorial Day
Independence Day
Labor Day
Columbus Day
Presidential Election Day
Thanksgiving Day
Day after Thanksgiving
Christmas Day

Paid Holidays
None

Shift Rates
The second shift will receive one hour at the double time rate of pay for the last hour of the shift; eight hours pay for seven hours of work, nine hours pay for eight hours of work. There must be a first shift in order to work a second shift. When it is not possible to conduct alteration or repair work during regular working hours in a building occupied by tenants, the rule for the second shift will apply.

(Carpenters District Council)

CARPENTER - HEAVY CONSTRUCTION WORK
(Construction of Engineered Structures and Building Foundations including all form work)

Heavy Construction Work

Effective Period: 7/1/2024 - 6/30/2025
Wage Rate per Hour: $60.59
Supplemental Benefit Rate per Hour: $55.84

Overtime
Time and one half the regular rate after an 8 hour day.
Time and one half the regular rate for Saturday.
Double time the regular rate for Sunday.
Saturday may be used as a make-up day at straight time when a day is lost during that week to inclement weather.

Overtime Holidays
Double time the regular rate for work on the following holiday(s).
New Year's Day
President's Day
Memorial Day
Independence Day
Labor Day
Columbus Day
Presidential Election Day
Thanksgiving Day
Christmas Day

Paid Holidays
None

Shift Rates

Off shift work commencing between 5:00 P.M. and 11:00 P.M. shall work eight and one half hours allowing for one half hour for lunch. The wage rate shall be 113% of the straight time hourly wage rate and the supplemental benefits shall be paid at the straight time rate. When two (2) or more shifts of Carpenters are employed, single time will be paid for each shift.

(Carpenters District Council)

CARPENTER - HIGH RISE CONCRETE FORMS
(Excludes Engineered Structures and Building Foundations)

Carpenter High Rise A

Effective Period: 7/1/2024 - 6/30/2025
Wage Rate per Hour: $51.48
Supplemental Benefit Rate per Hour: $44.74

Carpenter High Rise B

Carpenter High Rise B worker is excluded from high risk operations such as erection decking, perimeter debris netting, leading edge work, self-climbing form systems, and the installation of cocoon systems unless directly supervised by a Carpenter High Rise A worker.

Effective Period: 7/1/2024 - 6/30/2025
Wage Rate per Hour: $40.89
Supplemental Benefit Rate per Hour: $18.05

Overtime
Time and one half the regular rate after an 8 hour day.
Time and one half the regular rate for Saturday.
Double time the regular rate for Sunday.
Saturday may be used as a make-up day at straight time when a day is lost during that week to inclement weather.

Overtime Holidays
Time and one half the regular rate for work on the following holiday(s).
New Year's Day
President's Day
Good Friday
Memorial Day
Independence Day
Labor Day
Columbus Day
Presidential Election Day
Thanksgiving Day
Christmas Day

Paid Holidays
None

Shift Rates
The second shift wage rate shall be 113% of the straight time hourly wage rate. However, any shift beginning after 5:00 P.M. shall be paid at time and one half the regular hourly rate. There must be a first shift in order to work a second shift. When it is not possible to conduct alteration or repair work during regular working hours in a building occupied by tenants, the rule for the second shift will apply.

(Carpenters District Council)

CARPENTER - SIDEWALK SHED, SCAFFOLD AND HOIST

Carpenter - Hod Hoist

(Assisted by Mason Tender)

Effective Period: 7/1/2024 - 6/30/2025
Wage Rate per Hour: $55.00
Supplemental Benefit Rate per Hour: $48.90

Overtime
Time and one half the regular rate after an 8 hour day.
Time and one half the regular rate for Saturday.
Double time the regular rate for Sunday.
Saturday may be used as a make-up day at straight time when a day is lost during that week to inclement weather.

Overtime Holidays
Double time the regular rate for work on the following holiday(s).
New Year's Day
President's Day
Memorial Day
Independence Day
Labor Day
Columbus Day
Presidential Election Day
Thanksgiving Day
Day after Thanksgiving
Christmas Day

Paid Holidays
None

Shift Rates

The second shift will receive 112% of the straight time hourly rate. Benefit fund contributions shall be paid at the straight time rate. There must be a first shift in order to work a second shift. When it is not possible to conduct alteration or repair work during regular working hours in a building occupied by tenants, the rule for the second shift will apply.

(Carpenters District Council)

CARPENTER - WOOD WATER STORAGE TANK

Tank Mechanic

Effective Period: 7/1/2024 - 6/30/2025
Wage Rate per Hour: $37.83
Supplemental Benefit Rate per Hour: $25.32

Tank Helper

Effective Period: 7/1/2024 - 6/30/2025
Wage Rate per Hour: $29.69
Supplemental Benefit Rate per Hour: $25.32

Overtime

Time and one half the regular rate after an 8 hour day.
Time and one half the regular rate for Saturday.
Double time the regular rate for Sunday.
Time and one half the regular rate for work on a holiday plus the day's pay.

Paid Holidays

New Year's Day
President's Day
Good Friday
Memorial Day
Independence Day
Labor Day
Columbus Day
Thanksgiving Day
Day after Thanksgiving
1/2 day on Christmas Eve if work is performed in the A.M.
Christmas Day
1/2 day on New Year's Eve if work is performed in the A.M.

Vacation

Employed for one (1) year.....one (1) week vacation (40 hours)
Employed for three (3) years.....two (2) weeks vacation (80 hours)

Employed for more than twenty (20) years.....three (3) weeks vacation (120 hours)

SICK LEAVE:
Two (2) sick days after being employed for twenty (20) years.

(Carpenters District Council)

CEMENT & CONCRETE WORKER
Building Work

Cement & Concrete Worker

Effective Period: 7/1/2024 - 6/30/2025
Wage Rate per Hour: $47.28
Supplemental Benefit Rate per Hour: $32.20
Supplemental Note: $36.70 on Saturdays; $41.20 on Sundays & Holidays

Cement & Concrete Worker - (Hired after 2/6/2016)

Effective Period: 7/1/2024 - 6/30/2025
Wage Rate per Hour: $36.80
Supplemental Benefit Rate per Hour: $24.20
Supplemental Note: $26.70 on Saturdays; $29.20 on Sundays & Holidays

Overtime Description
Time and one half the regular rate after 7 hour day (time and one half the regular rate after an 8 hour day when working with Dockbuilders on pile cap forms and for work below street level to the top of the foundation wall, not to exceed 2 feet or 3 feet above the sidewalk-brick shelf, when working on the foundation and structure.)

Overtime
Time and one half the regular rate for Saturday.
Double time the regular rate for Sunday.

Overtime Holidays
Double time the regular rate for work on the following holiday(s).
New Year's Day
President's Day
Good Friday
Memorial Day
Independence Day
Labor Day
Columbus Day
Presidential Election Day
Thanksgiving Day
Christmas Day

Paid Holidays
1/2 day before Christmas Day
1/2 day before New Year's Day

Shift Rates
On shift work extending over a twenty-four hour period, all shifts are paid at straight time.

(Cement & Concrete Workers District Council 16)

CEMENT MASON

Cement Mason

Effective Period: 7/1/2024 - 6/30/2025
Wage Rate per Hour: $57.72
Supplemental Benefit Rate per Hour: $34.51
Supplemental Note: Supplemental benefit time and one half rate: $62.72; Double time rate: double the base supplemental benefit rate.

Overtime Description
Time and one-half the regular rate after an 8 hour day, double time the regular rate after 10 hours. Time and one-half the regular rate on Saturday, double time the regular rate after 10 hours. Double time the regular rate on Sunday. Four Days a week at Ten (10) hours straight time is allowed.

Overtime Holidays
Double time the regular rate for work on the following holiday(s).
New Year's Day
President's Day
Good Friday
Memorial Day
Independence Day
Labor Day
Columbus Day
Presidential Election Day
Thanksgiving Day
Christmas Day

Paid Holidays
Any worker who reports to work on Christmas Eve or New Year's Eve pursuant to his employer's instruction shall be entitled to three (3) hours afternoon pay without working.

Shift Rates
For off shift work, (at times other than the regular 7:00 A.M. to 3:30 P.M. work day) a cement mason shall be paid at the regular hourly rate plus a 25% per hour differential.

(Local #780) (BCA)

CORE DRILLER
Test Boring

Core Driller

Effective Period: 7/1/2024 - 6/30/2025
Wage Rate per Hour: $46.25
Supplemental Benefit Rate per Hour: $33.36

Core Driller Helper

Effective Period: 7/1/2024 - 6/30/2025
Wage Rate per Hour: $36.28
Supplemental Benefit Rate per Hour: $33.36

Core Driller Helper(Third year in the industry)

Effective Period: 7/1/2024 - 6/30/2025
Wage Rate per Hour: $32.62
Supplemental Benefit Rate per Hour: $33.36

Core Driller Helper (Second year in the industry)

Effective Period: 7/1/2024 - 6/30/2025
Wage Rate per Hour: $28.98
Supplemental Benefit Rate per Hour: $33.36

Core Driller Helper (First year in the industry)

Effective Period: 7/1/2024 - 6/30/2025
Wage Rate per Hour: $25.32
Supplemental Benefit Rate per Hour: $33.36

Overtime Description
Time and one half the regular rate for work on a holiday plus Holiday pay when worked.

Overtime
Time and one half the regular rate after an 8 hour day.
Time and one half the regular rate for Saturday.
Double time the regular rate for Sunday.
Time and one half the regular rate for work on the following holiday(s).

Paid Holidays
New Year's Day
Memorial Day
Independence Day
Labor Day
Veteran's Day
Thanksgiving Day
Christmas Day

Shift Rates
When two (2) or more shifts are employed, single time shall be paid for each shift, but those employees employed on a shift other than from 8:00 A.M. to 5:00 P.M. shall, in addition, receive two dollars ($2.00) per hour differential for each hour worked. When three (3) shifts are needed, each shift shall work seven and one-half (7 ½) hours paid for eight (8) hours of labor and be permitted one-half (½) hour for mealtime.

(Carpenters District Council)

DERRICKPERSON AND RIGGER

Derrick Person & Rigger

Effective Period: 7/1/2024 - 6/30/2025
Wage Rate per Hour: $60.40
Supplemental Benefit Rate per Hour: $60.14

Derrick Person & Rigger - Site Work

Assists the Stone Mason-Setter in the setting of stone and paving stone.

Effective Period: 7/1/2024 - 6/30/2025
Wage Rate per Hour: $47.54
Supplemental Benefit Rate per Hour: $47.70

Overtime Description
The first two hours of overtime on weekdays and the first seven hours of work on Saturdays are paid at time and one half for wages and supplemental benefits. All additional overtimes is paid at double time for wages and supplemental benefits.

Overtime
Double time the regular rate for Sunday.

Overtime Holidays
Double time the regular rate for work on the following holiday(s).
New Year's Day
Washington's Birthday

Good Friday
Memorial Day
Independence Day
Labor Day
Thanksgiving Day
Christmas Day

Paid Holidays

1/2 day on Christmas Eve if work is performed in the A.M.

(Local #197)

DIVER

Diver (Marine)

Effective Period: 7/1/2024 - 6/30/2025
Wage Rate per Hour: $75.46
Supplemental Benefit Rate per Hour: $55.84

Diver Tender (Marine)

Effective Period: 7/1/2024 - 6/30/2025
Wage Rate per Hour: $55.00
Supplemental Benefit Rate per Hour: $55.84

Overtime

Time and one half the regular rate after an 8 hour day.
Time and one half the regular rate for Saturday.
Double time the regular rate for Sunday.
Saturday may be used as a make-up day at straight time when a day is lost during that week to inclement weather.

Overtime Holidays

Double time the regular rate for work on the following holiday(s).
New Year's Day
President's Day
Memorial Day
Independence Day
Labor Day
Columbus Day
Presidential Election Day
Thanksgiving Day
Christmas Day

Paid Holidays

None

Shift Rates
When three shifts are utilized each shift shall work seven and one half-hours (7 1/2 hours) and paid for 8 hours, allowing for one half hour for lunch.

(Carpenters District Council)

DOCKBUILDER - PILE DRIVER

Dockbuilder - Pile Driver

Effective Period: 7/1/2024 - 6/30/2025
Wage Rate per Hour: $60.59
Supplemental Benefit Rate per Hour: $55.84

Overtime
Time and one half the regular rate after an 8 hour day.
Time and one half the regular rate for Saturday.
Double time the regular rate for Sunday.
Saturday may be used as a make-up day at straight time when a day is lost during that week to inclement weather.

Overtime Holidays
Double time the regular rate for work on the following holiday(s).
New Year's Day
President's Day
Memorial Day
Independence Day
Labor Day
Columbus Day
Presidential Election Day
Thanksgiving Day
Christmas Day

Paid Holidays
None

Shift Rates
Off shift work commencing between 5:00 P.M. and 11:00 P.M. shall work eight and one half hours allowing for one half hour for lunch. The wage rate shall be 113% of the straight time hourly wage rate and the supplemental benefits shall be paid at the straight time rate. When two (2) or more shifts of Dockbuilders are employed, single time will be paid for each shift.

(Carpenters District Council)

DRIVER: TRUCK (TEAMSTER)

Driver - Dump Truck

Effective Period: 7/1/2024 - 6/30/2025
Wage Rate per Hour: $44.17
Supplemental Benefit Rate per Hour: $59.15
Supplemental Note: Over 40 hours worked: at time and one half rate - $25.50; at double time rate - $34.00

Driver - Tractor Trailer

Effective Period: 7/1/2024 - 6/30/2025
Wage Rate per Hour: $47.32
Supplemental Benefit Rate per Hour: $56.90
Supplemental Note: Over 40 hours worked: at time and one half rate - $25.50; at double time rate - $34.00

Driver - Euclid & Turnapull Operator

Effective Period: 7/1/2024 - 6/30/2025
Wage Rate per Hour: $47.88
Supplemental Benefit Rate per Hour: $56.90
Supplemental Note: Over 40 hours worked: at time and one half rate - $25.50; at double time rate - $34.00

Overtime Description

For Paid Holidays: Holiday pay for all holidays shall be prorated based two hours per day for each day worked in the holiday week, not to exceed 8 hours of holiday pay. For Thanksgiving week, the prorated share shall be 5 1/3 hours of holiday pay for each day worked in Thanksgiving week.

Overtime

Time and one half the regular rate after an 8 hour day.
Time and one half the regular rate for Saturday.
Double time the regular rate for Sunday.

Overtime Holidays

Double time the regular rate for work on the following holiday(s).
New Year's Day
Martin Luther King Jr. Day
President's Day
Memorial Day
Independence Day
Labor Day
Columbus Day
Veteran's Day
Thanksgiving Day
Christmas Day

Paid Holidays

New Year's Day
Martin Luther King Jr. Day
President's Day
Memorial Day
Independence Day
Labor Day
Columbus Day
Veteran's Day
Thanksgiving Day
Christmas Day

Shift Rates

Off shift work commencing between 6:00 P.M. and 5:00 A.M. shall work eight and one half (8 1/2) hours allowing for one half hour for lunch

---

Driver Redi-Mix (Sand & Gravel)

Effective Period: 7/1/2024 - 6/30/2025
Wage Rate per Hour: $43.29
Supplemental Benefit Rate per Hour: $50.77
Supplemental Note: Over 40 hours worked: time and one half rate $20.48; double time rate $27.30

Overtime Description

For Paid Holidays: Employees who do not work on a contractual holiday shall be compensated two (2) hours extra pay in straight time wages and benefits for every day on which the Employee does not pass up a day's work during the calendar week (Sunday through Saturday) of the holiday, up to a maximum of ten (10) hours in wages and eight (8) hours in benefit contributions for the holiday

Overtime

Time and one half the regular rate after an 8 hour day.
Time and one half the regular rate for Saturday.
Double time the regular rate for Sunday.

Overtime Holidays

Double time the regular rate for work on the following holiday(s).
Martin Luther King Jr. Day
President's Day
Columbus Day
Veteran's Day

Triple time the regular rate for work on the following holiday(s).
New Year's Day
Memorial Day
Independence Day
Labor Day
Thanksgiving Day
Christmas Day

Paid Holidays

New Year's Day
Martin Luther King Jr. Day
President's Day
Memorial Day
Independence Day
Labor Day
Columbus Day
Election Day
Thanksgiving Day
Christmas Day

(Local #282)

ELECTRICIAN

(Including installation of low voltage cabling carrying data, video and/or voice on building construction/alteration/renovation projects.)

Electrician "A" (Regular Day / Day Shift)

Effective Period: 7/1/2024 - 6/30/2025
Wage Rate per Hour: $62.00
Supplemental Benefit Rate per Hour: $62.25
*** Supplemental Note: See Supplemental Benefit Rate per Hour Note below**

Electrician "A" (Regular Day Overtime after 7 hrs / Day Shift Overtime after 8 hrs)

Effective Period: 7/1/2024 - 6/30/2025
Wage Rate per Hour: $93.00
Supplemental Benefit Rate per Hour: $64.24
*** Supplemental Note: See Supplemental Benefit Rate per Hour Note below**

Electrician "A" (Swing Shift)

Effective Period: 7/1/2024 - 6/30/2025
Wage Rate per Hour: $72.75
Supplemental Benefit Rate per Hour: $70.56
*** Supplemental Note: See Supplemental Benefit Rate per Hour Note below**

Electrician "A" (Swing Shift Overtime after 7.5 hours)

Effective Period: 7/1/2024 - 6/30/2025
Wage Rate per Hour: $109.13
Supplemental Benefit Rate per Hour: $72.91

*** Supplemental Note: See Supplemental Benefit Rate per Hour Note below**

Electrician "A" (Graveyard Shift)

Effective Period: 7/1/2024 - 6/30/2025
Wage Rate per Hour: $81.49
Supplemental Benefit Rate per Hour: $77.61
*** Supplemental Note: See Supplemental Benefit Rate per Hour Note below**

Electrician "A" (Graveyard Shift Overtime after 7 hours)

Effective Period: 7/1/2024 - 6/30/2025
Wage Rate per Hour: $122.24
Supplemental Benefit Rate per Hour: $80.23
*** Supplemental Note: See Supplemental Benefit Rate per Hour Note below**

*** Supplemental Benefit Rate per Hour Note**
In addition to the Supplemental Benefit Rates per Hour listed above, the employer must provide an additional 6.2% of taxable gross pay earned on covered work only. This additional Supplemental Benefit Rate will terminate when the employee has contributed the maximum annual Social Security tax required by law, on all work performed.

Overtime
Time and one half the regular rate after a 7 hour day.
Time and one half the regular rate for Saturday.
Time and one half the regular rate for Sunday.

Overtime Holidays
Time and one half the regular rate for work on a holiday.
New Year's Day
Martin Luther King Jr. Day
President's Day
Memorial Day
Independence Day
Labor Day
Columbus Day
Veteran's Day
Thanksgiving Day
Day after Thanksgiving
Christmas Day

Paid Holidays
None

Shift Rates
For multiple shifts of temporary light and/or power, the temporary light and/or power employee shall be paid for 8 hours at the straight time rate. For three or less workers performing 8 hours temporary light and/or power the supplemental benefit rate is $24.36, effective 04/13/2023 the supplemental benefit rate is $24.78 - See * Supplemental Benefit Rate per Hour Note above.

Electrician "M" (First 8 hours)

"M" rated work shall be defined as jobbing: electrical work of limited duration and scope, also consisting of repairs and/or replacement of electrical and tele-data equipment. Includes all work necessary to retrofit, service, maintain and repair all kinds of lighting fixtures and local lighting controls and washing and cleaning of foregoing fixtures.

Effective Period: 7/1/2024 - 6/30/2025
Wage Rate per Hour: $32.00
Supplemental Benefit Rate per Hour: $27.20
First and Second Year "M" Wage Rate Per Hour: $27.50
First and Second Year "M" Supplemental Rate: $24.79

Electrician "M" (Overtime After First 8 hours)

"M" rated work shall be defined as jobbing: electrical work of limited duration and scope, also consisting of repairs and/or replacement of electrical and tele-data equipment. Includes all work necessary to retrofit, service, maintain and repair all kinds of lighting fixtures and local lighting controls and washing and cleaning of foregoing fixtures.

Effective Period: 7/1/2024 - 6/30/2025
Wage Rate per Hour: $48.00
Supplemental Benefit Rate per Hour: $29.23
First and Second Year "M" Wage Rate Per Hour: $41.25
First and Second Year "M" Supplemental Rate: $26.52

Overtime

Time and one half the regular rate after an 8 hour day.
Time and one half the regular rate for Saturday.
Time and one half the regular rate for Sunday.

Overtime Holidays

Time and one half the regular rate for work on the following holiday(s).
New Year's Day
Martin Luther King Jr. Day
President's Day
Memorial Day
Independence Day
Labor Day
Columbus Day
Veteran's Day
Thanksgiving Day
Day after Thanksgiving
Christmas Day

Paid Holidays

None

(Local #3)

ELECTRICIAN - ALARM TECHNICIAN

(Scope of Work - Inspect, test, repair, and replace defective, malfunctioning, or broken devices, components and controls of Fire, Burglar and Security Systems)

Alarm Technician

Effective Period: 7/1/2024 - 6/30/2025
Wage Rate per Hour: $37.40
Supplemental Benefit Rate per Hour: $21.44
Supplemental Note: $19.31 only after 8 hours worked in a day

Overtime Description

Time and one half the regular rate for work on the following holidays: Columbus Day, Veterans Day, Day after Thanksgiving.
Double time the regular rate for work on the following holidays: New Year's day, Martin Luther King Jr. Day, President's Day, Memorial Day, Independence Day, Labor Day, Thanksgiving Day, Christmas Day.

Overtime

Time and one half the regular rate after an 8 hour day.
Time and one half the regular rate for Saturday.
Time and one half the regular rate for Sunday.

Paid Holidays

New Year's Day
Martin Luther King Jr. Day
President's Day
Memorial Day
Independence Day
Labor Day
Columbus Day
Veteran's Day
Thanksgiving Day
Day after Thanksgiving
Christmas Day

Shift Rates

Night Differential is based upon a ten percent (10%) differential between the hours of 4:00 P.M. and 12:30 A.M. and a fifteen percent (15%) differential for the hours 12:00 A.M. to 8:30 A.M.

Vacation

At least 1 year of employment.....ten (10) days
5 years or more of employment.....fifteen (15) days
10 years of employment.....twenty (20) days
Plus one Personal Day per year

Sick Days:
One day per Year. Up to 4 vacation days may be used as sick days.

(Local #3)

ELECTRICIAN-STREET LIGHTING WORKER

Electrician - Electro Pole Electrician

Effective Period: 7/1/2024 - 6/30/2025
Wage Rate per Hour: $62.00
Supplemental Benefit Rate per Hour: $62.85
*** Supplemental Note: See Supplemental Benefit Rate per Hour Note below**

Electrician - Electro Pole Foundation Installer

Effective Period: 7/1/2024 - 6/30/2025
Wage Rate per Hour: $47.66
Supplemental Benefit Rate per Hour: $48.72
*** Supplemental Note: See Supplemental Benefit Rate per Hour Note below**

Electrician - Electro Pole Maintainer

Effective Period: 7/1/2024 - 6/30/2025
Wage Rate per Hour: $41.61
Supplemental Benefit Rate per Hour: $44.45
*** Supplemental Note: See Supplemental Benefit Rate per Hour Note below**

*** Supplemental Benefit Rate per Hour Note**
In addition to the Supplemental Benefit Rates per Hour listed above, the employer must provide an additional 6.2% of taxable gross pay earned on covered work only. This additional Supplemental Benefit Rate will terminate when the employee has contributed the maximum annual Social Security tax required by law, on all work performed.

Overtime Description

Electrician - Electro Pole Electrician: Time and one half the regular rate after a 7 hour day and after 5 consecutive days worked per week.
Electrician - Electro Pole Foundation Installer: Time and one half the regular rate after 8 hours within a 24 hour period and Saturday and Sunday.
Electrician - Electro Pole Maintainer: Time and one half the regular rate after a 7 hour day and after 5 consecutive days worked per week. Saturdays and Sundays may be used as a make-up day at straight time when a day is lost during the week to inclement weather.

Overtime Holidays

Time and one half the regular rate for work on the following holiday(s).
New Year's Day
Martin Luther King Jr. Day

President's Day
Memorial Day
Independence Day
Labor Day
Columbus Day
Veteran's Day
Thanksgiving Day
Day after Thanksgiving
Christmas Day

Paid Holidays
None

(Local #3)

ELEVATOR CONSTRUCTOR

Elevator Constructor

Effective Period: 7/1/2024 - 3/16/2025
Wage Rate per Hour: $80.35
Supplemental Benefit Rate per Hour: $41.23

Effective Period: 3/17/2025 - 6/30/2025
Wage Rate per Hour: $83.27
Supplemental Benefit Rate per Hour: $42.33

Overtime Description
For New Construction: work performed after an 8 hour day, Saturday, Sunday or between 4:30pm and 7:00am shall be paid at double time rate.

Existing buildings: work performed after an 8 hour day, Saturday, Sunday or between 5:30pm and 7:00 am shall be paid time and one half.

Overtime
Double time the regular rate for work on the following holiday(s).

Paid Holidays
New Year's Day
President's Day
Good Friday
Memorial Day
Independence Day
Labor Day
Columbus Day
Veteran's Day

Thanksgiving Day
Day after Thanksgiving
Christmas Day

Vacation

Employer contributes 8% of regular basic hourly rate as vacation pay for employees with more than 15 years of service, and 6% for employees with 5 to 15 years of service, and 4% for employees with less than 5 years of service.

(Local #1)

ELEVATOR REPAIR & MAINTENANCE

Elevator Service/Modernization Mechanic

Effective Period: 7/1/2024 - 3/16/2025
Wage Rate per Hour: $63.16
Supplemental Benefit Rate per Hour: $41.18

Effective Period: 3/17/2025 - 6/30/2025
Wage Rate per Hour: $65.54
Supplemental Benefit Rate per Hour: $42.28

Overtime Description

For Scheduled Service Work: Double time - work scheduled in advance by two or more workers performed on Sundays, Holidays, and between midnight and 7:00am.

Overtime

Time and one half the regular rate after an 8 hour day.
Time and one half the regular rate for Saturday.
Time and one half the regular rate for Sunday.
Time and one half the regular rate for work on a holiday plus the day's pay.

Paid Holidays

New Year's Day
President's Day
Good Friday
Memorial Day
Independence Day
Labor Day
Columbus Day
Veteran's Day
Thanksgiving Day
Day after Thanksgiving
Christmas Day

Shift Rates

Afternoon shift - regularly hourly rate plus a (15%) fifteen percent differential. Graveyard shift - time and one half the regular rate.

Vacation

Employer contributes 8% of regular basic hourly rate as vacation pay for employees with more than 15 years of service, and 6% for employees with 5 to 15 years of service, and 4% for employees with less than 5 years of service.

(Local #1)

ENGINEER

Engineer - Heavy Construction Operating Engineer I

Cherrypickers 20 tons and over and Loaders (rubber tired and/or tractor type with a manufacturer's minimum rated capacity of six cubic yards and over).

Effective Period: 7/1/2024 - 6/30/2025
Wage Rate per Hour: $76.57
Supplemental Benefit Rate per Hour: $48.85
Supplemental Note: $90.30 on overtime
Shift Wage Rate: $122.51

Engineer - Heavy Construction Operating Engineer II

Backhoes, Basin Machines, Groover, Mechanical Sweepers, Bobcat, Boom Truck, Barrier Transport (Barrier Mover) & machines of similar nature. Operation of Churn Drills and machines of a similar nature, Stetco Silent Hoist and machines of similar nature, Vac-Alls, Meyers Machines, John Beam and machines of a similar nature, Ross Carriers and Travel Lifts and machines of a similar nature, Bulldozers, Scrapers and Turn-a-Pulls: Tugger Hoists (Used exclusively for handling excavated material); Tractors with attachments, Hyster and Roustabout Cranes, Cherrypickers. Austin Western, Grove and machines of a similar nature, Scoopmobiles, Monorails, Conveyors, Trenchers: Loaders-Rubber Tired and Tractor: Barber Greene and Eimco Loaders and Eimco Backhoes; Mighty Midget and similar breakers and Tampers, Curb and Gutter Pavers and Motor Patrol, Motor Graders and all machines of a similar nature. Locomotives 10 Tons or under. Mini-Max, Break-Tech and machines of a similar nature; Milling machines, robotic and demolition machines and machines of a similar nature, shot blaster, skid steer machines and machines of a similar nature including bobcat, pile rig rubber-tired excavator (37,000 lbs. and under), 2 person auger.

Effective Period: 7/1/2024 - 6/30/2025
Wage Rate per Hour: $74.14
Supplemental Benefit Rate per Hour: $48.85
Supplemental Note: $90.30 on overtime
Shift Wage Rate: $118.62

Engineer - Heavy Construction Operating Engineer III

Minor Equipment such as Tractors, Post Hole Diggers, Ditch Witch (Walk Behind), Road Finishing Machines, Rollers five tons and under, Tugger Hoists, Dual Purpose Trucks, Fork Lifts, and Dempsey Dumpers, Fireperson.

Effective Period: 7/1/2024 - 6/30/2025
Wage Rate per Hour: $70.09
Supplemental Benefit Rate per Hour: $48.85
Supplemental Note: $90.30 on overtime
Shift Wage Rate: $112.14

Engineer - Heavy Construction Maintenance Engineer I

Installing, Repairing, Maintaining, Dismantling of all equipment including Steel Cutting, Bending and Heat Sealing Machines, Mechanical Heaters, Grout Pumps, Bentonite Pumps & Plants, Screening Machines, Fusion Coupling Machines, Tunnel Boring Machines Moles and Machines of a similar nature, Power Packs, Mechanical Hydraulic Jacks; all drill rigs including but not limited to Churn, Rotary Caisson, Raised Bore & Drills of a similar nature; Personnel, Inspection & Safety Boats or any boats used to perform functions of same, Mine Hoists, Whirlies, all Climbing Cranes, all Tower Cranes, including but not limited to Truck Mounted and Crawler Type and machines of similar nature; Maintaining Hydraulic Drills and machines of a similar nature; Well Point System-Installation and dismantling; Burning, Welding, all Pumps regardless of size and/or motor power, except River Cofferdam Pumps and Wells Point Pumps; Motorized Buggies (three or more); equipment used in the cleaning and televising of sewers, but not limited to jet-rodder/vacuum truck, vacall/vactor, closed circuit television inspection equipment; high powered water pumps, jet pumps; screed machines and concrete finishing machines of a similar nature; vermeers.

Effective Period: 7/1/2024 - 6/30/2025
Wage Rate per Hour: $73.76
Supplemental Benefit Rate per Hour: $48.85
Supplemental Note: $90.30 on overtime
Shift Wage Rate: $118.02

Engineer - Heavy Construction Maintenance Engineer II

On Base Mounted Tower Cranes

Effective Period: 7/1/2024 - 6/30/2025
Wage Rate per Hour: $98.47
Supplemental Benefit Rate per Hour: $48.85
Supplemental Note: $90.30 on overtime
Shift Wage Rate: $157.55

Engineer - Heavy Construction Maintenance Engineer III

On Generators, Light Towers

Effective Period: 7/1/2024 - 6/30/2025
Wage Rate per Hour: $46.95
Supplemental Benefit Rate per Hour: $48.85
Supplemental Note: $90.30 on overtime
Shift Wage Rate: $75.12

Engineer - Heavy Construction Maintenance Engineer IV

On Pumps and Mixers including mud sucking

Effective Period: 7/1/2024 - 6/30/2025
Wage Rate per Hour: $48.29
Supplemental Benefit Rate per Hour: $48.85
Supplemental Note: $90.30 on overtime
Shift Wage Rate: $77.26

Engineer - Heavy Construction Service Engineer

Gradalls: Concrete Pumps: Power Houses: Driving Truck Cranes: Driving and Operating Fuel and Grease Trucks.

Effective Period: 7/1/2024 - 6/30/2025
Wage Rate per Hour: $65.99
Supplemental Benefit Rate per Hour: $48.85
Supplemental Note: $90.30 on overtime
Shift Wage Rate: $105.58

Engineer - Heavy Construction Service Mechanic

Shovels: Cranes: Draglines: Backhoes: Keystones: Pavers: Trenching Machines: Gunite Machines: Compressors (three (3) or more in Battery): Crawler Cranes- having a straight lattice boom with no attachment or luffing boom, no jib and no auxiliary attachment.

Effective Period: 7/1/2024 - 6/30/2025
Wage Rate per Hour: $44.09
Supplemental Benefit Rate per Hour: $48.85
Supplemental Note: $90.30 on overtime
Shift Wage Rate: $70.54

Engineer - Steel Erection Maintenance Engineers

Derrick, Travelers, Tower, Crawler Tower and Climbing Cranes

Effective Period: 7/1/2024 - 6/30/2025
Wage Rate per Hour: $70.95
Supplemental Benefit Rate per Hour: $48.85
Supplemental Note: $90.30 on overtime
Shift Wage Rate: $113.52

Engineer - Steel Erection Oiler I

On a Truck Crane

Effective Period: 7/1/2024 - 6/30/2025
Wage Rate per Hour: $66.10
Supplemental Benefit Rate per Hour: $48.85
Supplemental Note: $90.30 on overtime
Shift Wage Rate: $105.76

Engineer - Steel Erection Oiler II

On a Crawler Crane

Effective Period: 7/1/2024 - 6/30/2025
Wage Rate per Hour: $47.74
Supplemental Benefit Rate per Hour: $48.85
Supplemental Note: $90.30 on overtime
Shift Wage Rate: $76.38

Overtime Description

On jobs of more than one shift, if the next shift employee fails to report for work through any cause over which the employer has no control, the employee on duty who works the next shift continues to work at the single time rate.

Overtime

Double time the regular rate after an 8 hour day.
Double time the regular time rate for Saturday.
Double time the regular rate for Sunday.
Double time the regular rate for work on the following holiday(s).

Paid Holidays

New Year's Day
Martin Luther King Jr. Day
President's Day
Memorial Day
Independence Day
Labor Day
Columbus Day
Veteran's Day
Thanksgiving Day
Day after Thanksgiving
Christmas Day

Engineer - Building Work Maintenance Engineers I

Installing, repairing, maintaining, dismantling (of all equipment including: Steel Cutting and Bending Machines, Mechanical Heaters, Mine Hoists, Climbing Cranes, Tower Cranes, Linden Peine, Lorain, Liebherr, Mannes, or machines of a similar nature, Well Point Systems, Deep Well Pumps, Concrete Mixers with loading Device, Concrete Plants, Motor Generators when used for temporary power and lights), skid steer machines of a similar nature including bobcat.

Effective Period: 7/1/2024 - 6/30/2025
Wage Rate per Hour: $62.34
Supplemental Benefit Rate per Hour: $47.94
Supplemental Note: $88.48 on overtime

Engineer - Building Work Maintenance Engineers II

On Pumps, Generators, Mixers and Heaters

Effective Period: 7/1/2024 - 6/30/2025
Wage Rate per Hour: $47.29
Supplemental Benefit Rate per Hour: $47.94
Supplemental Note: $88.48 on overtime

Engineer - Building Work Oilers I

All gasoline, electric, diesel or air operated Gradealls: Concrete Pumps, Overhead Cranes in Power Houses: Their duties shall be to assist the Engineer in oiling, greasing and repairing of all machines; Driving Truck Cranes: Driving and Operating Fuel and Grease Trucks, Cherrypickers (hydraulic cranes) over 70,000 GVW, and machines of a similar nature.

Effective Period: 7/1/2024 - 6/30/2025
Wage Rate per Hour: $59.02
Supplemental Benefit Rate per Hour: $47.94
Supplemental Note: $88.48 on overtime

Engineer - Building Work Oilers II

Oilers on Crawler Cranes, Backhoes, Trenching Machines, Gunite Machines, Compressors (three or more in Battery).

Effective Period: 7/1/2024 - 6/30/2025
Wage Rate per Hour: $42.55
Supplemental Benefit Rate per Hour: $47.94
Supplemental Note: $88.48 on overtime

Overtime Description

On jobs of more than one shift, if an Employee fails to report for work through any cause over which the Employer has no control, the Employee on duty will continue to work at the rate of single time.

Overtime

Double time the regular rate after an 8 hour day.
Double time the regular time rate for Saturday.
Double time the regular rate for Sunday.
Double time the regular rate for work on the following holiday(s).

Paid Holidays

New Year's Day
Martin Luther King Jr. Day
President's Day
Memorial Day
Independence Day
Labor Day
Columbus Day
Veteran's Day
Thanksgiving Day

Christmas Day

Shift Rates

When two (2) or more shifts are employed, single time will be paid for each shift.

(Local #15)

ENGINEER - CITY SURVEYOR AND CONSULTANT

Party Chief

Effective Period: 7/1/2024 - 6/30/2025
Wage Rate per Hour: $44.73
Supplemental Benefit Rate per Hour: $28.36
Supplemental Note: Overtime Benefit Rate - $33.87 per hour (time & one half) $39.37 per hour (double time).

Instrument Person

Effective Period: 7/1/2024 - 6/30/2025
Wage Rate per Hour: $36.30
Supplemental Benefit Rate per Hour: $28.36
Supplemental Note: Overtime Benefit Rate - $33.87 per hour (time & one half) $39.37 per hour (double time).

Rodperson

Effective Period: 7/1/2024 - 6/30/2025
Wage Rate per Hour: $30.97
Supplemental Benefit Rate per Hour: $28.36
Supplemental Note: Overtime Benefit Rate - $33.87 per hour (time & one half) $39.37 per hour (double time).

Rodperson 1st Year

Effective Period: 7/1/2024 - 6/30/2025
Wage Rate per Hour: $25.00
Supplemental Benefit Rate per Hour: $28.36
Supplemental Note: Overtime Benefit Rate - $33.87 per hour (time & one half) $39.37 per hour (double time).

Overtime Description

Time and one half the regular rate after an 8 hour day, Time and one half the regular rate for Saturday for the first eight hours worked, Double time the regular time rate for Saturday for work performed in excess of eight hours, Double time the regular rate for Sunday and Double time the regular rate for work on a holiday.

Paid Holidays

New Year's Day

Lincoln's Birthday
President's Day
Memorial Day
Independence Day
Labor Day
Columbus Day
Veteran's Day
Thanksgiving Day
Day after Thanksgiving
Christmas Day
Employees must work at least one day in the payroll week in which the holiday occurs to receive the paid holiday

(Operating Engineer Local #15-D)

ENGINEER - FIELD (BUILDING CONSTRUCTION)

(Construction of Building Projects, Concrete Superstructures, etc.)

Field Engineer - BC Party Chief

Effective Period: 7/1/2024 - 6/30/2025
Wage Rate per Hour: $68.86
Supplemental Benefit Rate per Hour: $43.03
Supplemental Note: Overtime Benefit Rate - $60.85 per hour (time & one half) $78.66 per hour (double time).

Field Engineer - BC Instrument Person

Effective Period: 7/1/2024 - 6/30/2025
Wage Rate per Hour: $50.03
Supplemental Benefit Rate per Hour: $43.03
Supplemental Note: Overtime Benefit Rate - $60.85 per hour (time & one half) $78.66 per hour (double time).

Field Engineer - BC Rodperson

Effective Period: 7/1/2024 - 6/30/2025
Wage Rate per Hour: $30.96
Supplemental Benefit Rate per Hour: $43.03
Supplemental Note: Overtime Benefit Rate - $60.85 per hour (time & one half) $78.66 per hour (double time).

Overtime Description

Time and one half the regular rate after a 7 hour work and time and one half the regular rate for Saturday for the first seven hours worked, Double time the regular time rate for Saturday for work performed in excess of seven hours, Double time the regular rate for Sunday and Double time the regular rate for work on a holiday.

Paid Holidays

New Year's Day
President's Day
Good Friday
Memorial Day
Independence Day
Labor Day
Columbus Day
Veteran's Day
Thanksgiving Day
Christmas Day
Employees must work at least one day in the payroll week in which the holiday occurs to receive the paid holiday

(Operating Engineer Local #15-D)

ENGINEER - FIELD (HEAVY CONSTRUCTION)

(Construction of Roads, Tunnels, Bridges, Sewers, Building Foundations, Engineering Structures etc.)

Field Engineer - HC Party Chief

Effective Period: 7/1/2024 - 6/30/2025
Wage Rate per Hour: $79.02
Supplemental Benefit Rate per Hour: $46.67
Supplemental Note: Overtime benefit rate - $66.19 per hour (time & one half), $85.70 per hour (double time).

Field Engineer - HC Instrument Person

Effective Period: 7/1/2024 - 6/30/2025
Wage Rate per Hour: $56.62
Supplemental Benefit Rate per Hour: $46.67
Supplemental Note: Overtime benefit rate - $66.19 per hour (time & one half), $85.70 per hour (double time).

Field Engineer - HC Rodperson

Effective Period: 7/1/2024 - 6/30/2025
Wage Rate per Hour: $46.66
Supplemental Benefit Rate per Hour: $46.67
Supplemental Note: Overtime benefit rate - $66.19 per hour (time & one half), $85.70 per hour (double time).

Field Engineer - HC Rodperson 1st Year

Effective Period: 7/1/2024 - 6/30/2025
Wage Rate per Hour: $25.00
Supplemental Benefit Rate per Hour: $46.67

Supplemental Note: Overtime benefit rate - $66.19 per hour (time & one half), $85.70 per hour (double time).

Overtime Description

Time and one half the regular rate after an 8 hour day, Time and one half the regular rate for Saturday for the first eight hours worked, Double time the regular time rate for Saturday for work performed in excess of eight hours, Double time the regular rate for Sunday and Double time the regular rate for work on a holiday.

Paid Holidays

New Year's Day
Martin Luther King Jr. Day
President's Day
Memorial Day
Independence Day
Labor Day
Columbus Day
Veteran's Day
Thanksgiving Day
Christmas Day
Employees must work at least one day in the payroll week in which the holiday occurs to receive the paid holiday

(Operating Engineer Local #15-D)

ENGINEER - FIELD (STEEL ERECTION)

Field Engineer - Steel Erection Party Chief

Effective Period: 7/1/2024 - 6/30/2025
Wage Rate per Hour: $74.95
Supplemental Benefit Rate per Hour: $45.01
Supplemental Note: Overtime benefit rate - $63.69 per hour (time & one half), $82.37 per hour (double time).

Field Engineer - Steel Erection Instrument Person

Effective Period: 7/1/2024 - 6/30/2025
Wage Rate per Hour: $56.03
Supplemental Benefit Rate per Hour: $45.01
Supplemental Note: Overtime benefit rate - $63.69 per hour (time & one half), $82.37 per hour (double time).

Field Engineer - Steel Erection Rodperson

Effective Period: 7/1/2024 - 6/30/2025
Wage Rate per Hour: $36.15
Supplemental Benefit Rate per Hour: $45.01
Supplemental Note: Overtime benefit rate - $63.69 per hour (time & one half), $82.37 per hour (double time).

Field Engineer - Steel Erection Rodperson 1st Year

Effective Period: 7/1/2024 - 6/30/2025
Wage Rate per Hour: $25.00
Supplemental Benefit Rate per Hour: $45.01
Supplemental Note: Overtime benefit rate - $63.69 per hour (time & one half), $82.37 per hour (double time).

Overtime Description
Time and one half the regular rate for Saturday for the first eight hours worked.
Double time the regular rate for Saturday for work performed in excess of eight hours.

Overtime
Time and one half the regular rate after an 8 hour day.
Double time the regular rate for Sunday.
Double time the regular rate for work on the following holiday(s).

Paid Holidays
New Year's Day
Lincoln's Birthday
President's Day
Memorial Day
Independence Day
Labor Day
Columbus Day
Veteran's Day
Thanksgiving Day
Christmas Day
Employees must work at least one day in the payroll week in which the holiday occurs to receive the paid holiday

(Operating Engineer Local #15-D)

ENGINEER - OPERATING

Operating Engineer - Road & Heavy Construction I

Back Filling Machines, Cranes, Mucking Machines and Dual Drum Paver.

Effective Period: 7/1/2024 - 6/30/2025
Wage Rate per Hour: $92.72
Supplemental Benefit Rate per Hour: $36.90
Supplemental Note: $67.50 overtime hours
Shift Wage Rate: $148.35

Operating Engineer - Road & Heavy Construction II

Backhoes, Power Shovels, Hydraulic Clam Shells, Steel Erection, Moles and machines of a similar nature.

Effective Period: 7/1/2024 - 6/30/2025
Wage Rate per Hour: $95.96
Supplemental Benefit Rate per Hour: $36.90
Supplemental Note: $67.50 overtime hours
Shift Wage Rate: $153.54

Operating Engineer - Road & Heavy Construction III

Mine Hoists (Cranes, etc. when used as Mine Hoists)

Effective Period: 7/1/2024 - 6/30/2025
Wage Rate per Hour: $99.01
Supplemental Benefit Rate per Hour: $36.90
Supplemental Note: $67.50 overtime hours
Shift Wage Rate: $158.42

Operating Engineer - Road & Heavy Construction IV

Gradealls, Keystones, Cranes on land or water (with digging buckets), Bridge Cranes, Vermeer Cutter and machines of a similar nature, Trenching Machines.

Effective Period: 7/1/2024 - 6/30/2025
Wage Rate per Hour: $96.64
Supplemental Benefit Rate per Hour: $36.90
Supplemental Note: $67.50 overtime hours
Shift Wage Rate: $154.62

Operating Engineer - Road & Heavy Construction V

Pile Drivers & Rigs (working alongside Dock Builder foreperson): Derrick Boats, Tunnel Shovels.

Effective Period: 7/1/2024 - 6/30/2025
Wage Rate per Hour: $94.76
Supplemental Benefit Rate per Hour: $36.90
Supplemental Note: $67.50 overtime hours
Shift Wage Rate: $151.62

Operating Engineer - Road & Heavy Construction VI

Mixers (Concrete with loading attachment), Concrete Pavers, Cableways, Land Derricks, Power Houses (Low Air Pressure Units).

Effective Period: 7/1/2024 - 6/30/2025
Wage Rate per Hour: $90.08
Supplemental Benefit Rate per Hour: $36.90
Supplemental Note: $67.50 overtime hours
Shift Wage Rate: $144.13

Operating Engineer - Road & Heavy Construction VII

Barrier Movers, Barrier Transport and Machines of a Similar Nature.

Effective Period: 7/1/2024 - 6/30/2025
Wage Rate per Hour: $73.00
Supplemental Benefit Rate per Hour: $36.90
Supplemental Note: $67.50 overtime hours
Shift Wage Rate: $116.80

Operating Engineer - Road & Heavy Construction VIII

Utility Compressors

Effective Period: 7/1/2024 - 6/30/2025
Wage Rate per Hour: $56.95
Supplemental Benefit Rate per Hour: $36.90
Supplemental Note: $67.50 overtime hours
Shift Wage Rate: $71.45

Operating Engineer - Road & Heavy Construction IX

Horizontal Boring Rig

Effective Period: 7/1/2024 - 6/30/2025
Wage Rate per Hour: $85.75
Supplemental Benefit Rate per Hour: $36.90
Supplemental Note: $67.50 overtime hours
Shift Wage Rate: $137.20

Operating Engineer - Road & Heavy Construction X

Elevators (manually operated as personnel hoist).

Effective Period: 7/1/2024 - 6/30/2025
Wage Rate per Hour: $78.92
Supplemental Benefit Rate per Hour: $36.90
Supplemental Note: $67.50 overtime hours
Shift Wage Rate: $126.27

Operating Engineer - Road & Heavy Construction XI

Compressors (Portable 3 or more in battery), Driving of Truck Mounted Compressors, Well-point Pumps, Tugger Machines Well Point Pumps, Churn Drill.

Effective Period: 7/1/2024 - 6/30/2025
Wage Rate per Hour: $61.57
Supplemental Benefit Rate per Hour: $36.90
Supplemental Note: $67.50 overtime hours
Shift Wage Rate: $98.51

Operating Engineer - Road & Heavy Construction XII

All Drills and Machines of a similar nature.

Effective Period: 7/1/2024 - 6/30/2025
Wage Rate per Hour: $91.03
Supplemental Benefit Rate per Hour: $36.90
Supplemental Note: $67.50 overtime hours
Shift Wage Rate: $145.65

Operating Engineer - Road & Heavy Construction XIII

Concrete Pumps, Concrete Plant, Stone Crushers, Double Drum Hoist, Power Houses (other than above).

Effective Period: 7/1/2024 - 6/30/2025
Wage Rate per Hour: $88.22
Supplemental Benefit Rate per Hour: $36.90
Supplemental Note: $67.50 overtime hours
Shift Wage Rate: $141.15

Operating Engineer - Road & Heavy Construction XIV

Concrete Mixer

Effective Period: 7/1/2024 - 6/30/2025
Wage Rate per Hour: $84.38
Supplemental Benefit Rate per Hour: $36.90
Supplemental Note: $67.50 overtime hours
Shift Wage Rate: $135.01

Operating Engineer - Road & Heavy Construction XV

Compressors (Portable Single or two in Battery, not over 100 feet apart), Pumps (River Cofferdam) and Welding Machines, Push Button Machines, All Engines Irrespective of Power (Power-Pac) used to drive auxiliary equipment, Air, Hydraulic, etc.

Effective Period: 7/1/2024 - 6/30/2025
Wage Rate per Hour: $57.32
Supplemental Benefit Rate per Hour: $36.90
Supplemental Note: $67.50 overtime hours
Shift Wage Rate: $91.71

Operating Engineer - Road & Heavy Construction XVI

Concrete Breaking Machines, Hoists (Single Drum), Load Masters, Locomotives (over ten tons) and Dinkies over ten tons, Hydraulic Crane-Second Engineer.

Effective Period: 7/1/2024 - 6/30/2025
Wage Rate per Hour: $80.64
Supplemental Benefit Rate per Hour: $36.90

Supplemental Note: $67.50 overtime hours
Shift Wage Rate: $129.02

Operating Engineer - Road & Heavy Construction XVII

On-Site concrete plant engineer, On-site Asphalt Plant Engineer, and Vibratory console.

Effective Period: 7/1/2024 - 6/30/2025
Wage Rate per Hour: $81.22
Supplemental Benefit Rate per Hour: $36.90
Supplemental Note: $67.50 overtime hours
Shift Wage Rate: $129.95

Operating Engineer - Road & Heavy Construction XVIII

Tower Crane

Effective Period: 7/1/2024 - 6/30/2025
Wage Rate per Hour: $116.04
Supplemental Benefit Rate per Hour: $36.90
Supplemental Note: $67.50 overtime hours
Shift Wage Rate: $185.66

Operating Engineer - Paving I

Asphalt Spreaders, Autogrades (C.M.I.), Roto/Mil

Effective Period: 7/1/2024 - 6/30/2025
Wage Rate per Hour: $90.08
Supplemental Benefit Rate per Hour: $36.90
Supplemental Note: $67.50 overtime hours
Shift Wage Rate: $144.13

Operating Engineer - Paving II

Asphalt Roller

Effective Period: 7/1/2024 - 6/30/2025
Wage Rate per Hour: $87.81
Supplemental Benefit Rate per Hour: $36.90
Supplemental Note: $67.50 overtime hours
Shift Wage Rate: $140.50

Operating Engineer - Paving III

Asphalt Plants

Effective Period: 7/1/2024 - 6/30/2025
Wage Rate per Hour: $74.42

Supplemental Benefit Rate per Hour: $36.90
Supplemental Note: $67.50 overtime hours
Shift Wage Rate: $119.07

Operating Engineer - Concrete I

Cranes

Effective Period: 7/1/2024 - 6/30/2025
Wage Rate per Hour: $96.22
Supplemental Benefit Rate per Hour: $36.90
Supplemental Note: $67.50 overtime hours

Operating Engineer - Concrete II

Compressors

Effective Period: 7/1/2024 - 6/30/2025
Wage Rate per Hour: $57.75
Supplemental Benefit Rate per Hour: $36.90
Supplemental Note: $67.50 overtime hours

Operating Engineer - Concrete III

Micro-traps (Negative Air Machines), Vac-All Remediation System.

Effective Period: 7/1/2024 - 6/30/2025
Wage Rate per Hour: $77.14
Supplemental Benefit Rate per Hour: $36.90
Supplemental Note: $67.50 overtime hours

Operating Engineer - Steel Erection I

Three Drum Derricks

Effective Period: 7/1/2024 - 6/30/2025
Wage Rate per Hour: $100.14
Supplemental Benefit Rate per Hour: $36.90
Supplemental Note: $67.50 overtime hours
Shift Wage Rate: $160.22

Operating Engineer - Steel Erection II

Cranes, 2 Drum Derricks, Hydraulic Cranes, Fork Lifts and Boom Trucks.

Effective Period: 7/1/2024 - 6/30/2025
Wage Rate per Hour: $96.26
Supplemental Benefit Rate per Hour: $36.90
Supplemental Note: $67.50 overtime hours
Shift Wage Rate: $154.02

Operating Engineer - Steel Erection III

Compressors, Welding Machines.

Effective Period: 7/1/2024 - 6/30/2025
Wage Rate per Hour: $56.34
Supplemental Benefit Rate per Hour: $36.90
Supplemental Note: $67.50 overtime hours
Shift Wage Rate: $90.14

Operating Engineer - Steel Erection IV

Compressors - Not Combined with Welding Machine. (Public Works Only)

Effective Period: 7/1/2024 - 6/30/2025
Wage Rate per Hour: $53.69
Supplemental Benefit Rate per Hour: $36.90
Supplemental Note: $67.50 overtime hours
Shift Wage Rate: $85.90

Operating Engineer - Building Work I

Forklifts, Plaster (Platform machine), Plaster Bucket, Concrete Pump and all other equipment used for hoisting material.

Effective Period: 7/1/2024 - 6/30/2025
Wage Rate per Hour: $73.52
Supplemental Benefit Rate per Hour: $36.90
Supplemental Note: $67.50 overtime hours

Operating Engineer - Building Work II

Compressors, Welding Machines (Cutting Concrete-Tank Work), Paint Spraying, Sandblasting, Pumps (with the exclusion of Concrete Pumps), All Engines irrespective of Power (Power-Pac) used to drive Auxiliary Equipment, Air, Hydraulic, Jacking System, etc.

Effective Period: 7/1/2024 - 6/30/2025
Wage Rate per Hour: $55.18
Supplemental Benefit Rate per Hour: $36.90
Supplemental Note: $67.50 overtime hours

Operating Engineer - Building Work III

Double Drum

Effective Period: 7/1/2024 - 6/30/2025
Wage Rate per Hour: $91.26
Supplemental Benefit Rate per Hour: $36.90
Supplemental Note: $67.50 overtime hours

Operating Engineer - Building Work IV

Stone Derrick, Cranes, Hydraulic Cranes Boom Trucks.

Effective Period: 7/1/2024 - 6/30/2025
Wage Rate per Hour: $96.60
Supplemental Benefit Rate per Hour: $36.90
Supplemental Note: $67.50 overtime hours

Operating Engineer - Building Work V

Dismantling and Erection of Cranes, Relief Engineer.

Effective Period: 7/1/2024 - 6/30/2025
Wage Rate per Hour: $81.62
Supplemental Benefit Rate per Hour: $36.90
Supplemental Note: $67.50 overtime hours

Operating Engineer - Building Work VI

4 Pole Hoist, Single Drum Hoists.

Effective Period: 7/1/2024 - 6/30/2025
Wage Rate per Hour: $80.76
Supplemental Benefit Rate per Hour: $36.90
Supplemental Note: $67.50 overtime hours

Operating Engineer - Building Work VII

Rack & Pinion and House Cars

Effective Period: 7/1/2024 - 6/30/2025
Wage Rate per Hour: $64.33
Supplemental Benefit Rate per Hour: $36.90
Supplemental Note: $67.50 overtime hours
For New House Car projects Wage Rate per Hour $51.45
For New House Car projects: Supplemental Benefit overtime hours: $52.20

Overtime Description

On jobs of more than one shift, if an Employee fails to report for work through any cause over which the Employer has no control, the Employee on duty will continue to work at the rate of single time.

For House Cars and Rack & Pinion only: Overtime paid at time and one-half for all hours in excess of eight hours in a day, Saturday, Sunday and Holidays worked.

Overtime

Double time the regular rate after an 8 hour day.
Double time the regular time rate for Saturday.
Double time the regular rate for Sunday.
Double time the regular rate for work on the following holiday(s).

Paid Holidays

New Year's Day
Martin Luther King Jr. Day
President's Day
Memorial Day
Independence Day
Labor Day
Columbus Day
Veteran's Day
Thanksgiving Day
Day after Thanksgiving
Christmas Day

Shift Rates

When two (2) or more shifts are employed, single time will be paid for each shift.
For Steel Erection Only: Shifts may be worked at the single time rate at other than the regular working hours (8:00 A.M. to 4:30 P.M.) on the following work ONLY: Heavy construction jobs on work below the street level, over railroad tracks and on building jobs.

(Operating Engineer Local #14)

FLAGGER

Flagger to be paid at the rate of the journeyperson or apprentice in the trade performing the underlying work.

In accordance with the Comptroller's Prevailing Wage Memorandum Regarding Flag Persons dated June 1, 2024, this title includes traffic control duty only for City public works contracts and subcontracts solicited on or after July 1, 2024.

On City public works contracts and subcontracts solicited on or after July 1, 2024, traffic control worker to be paid at the rate of the journeyperson or apprentice in the trade performing the underlying work.

If the trade performing the underlying work does not regularly employ a flagger or traffic control worker, then one of the following titles must be used on such projects:
Laborer - Heavy & Highway
Laborer - Paver & Roadbuilder
Laborer - Paver & Roadbuilder Line Striping (Roadway)

FLOOR COVERER

(Interior vinyl composition tile, sheath vinyl linoleum and wood parquet tile including site preparation and synthetic turf not including site preparation)

Floor Coverer

Effective Period: 7/1/2024 - 6/30/2025
Wage Rate per Hour: $55.05
Supplemental Benefit Rate per Hour: $47.88

Overtime

Time and one half the regular rate after an 8 hour day.
Time and one half the regular rate for Saturday.
Double time the regular rate for Sunday.
Saturday may be used as a make-up day at straight time when a day is lost during that week to inclement weather.

Overtime Holidays

Double time the regular rate for work on the following holiday(s).
New Year's Day
President's Day
Memorial Day
Independence Day
Labor Day
Columbus Day
Presidential Election Day
Thanksgiving Day
Day after Thanksgiving
Day before Christmas
Christmas Day
Day before New Year's Day

Shift Rates

Two shifts may be utilized with the first shift working 8 a.m. to the end of the shift at straight time rate of pay. The wage rate for the second shift consisting of 7 hours shall be paid at 114.29% of straight time wage rate. The wage rate for the second shift consisting of 8 hours shall be paid 112.5% of the straight time wage rate. When it is not possible to conduct alteration or repair work during regular working hours in a building occupied by tenants, the rule for the second shift will apply.

(Carpenters District Council)

GLAZIER
(New Construction, Remodeling, and Alteration)

Glazier

Effective Period: 7/1/2024 - 6/30/2025
Wage Rate per Hour: $49.00
Supplemental Benefit Rate per Hour: $55.77

Overtime
Time and one half the regular rate after an 8 hour day.
Time and one half the regular rate for Saturday.
Double time the regular rate for Sunday.

Overtime Holidays
Double time the regular rate for work on the following holiday(s).
New Year's Day
President's Day
Memorial Day
Labor Day
Thanksgiving Day
Day after Thanksgiving
Christmas Day

Paid Holidays
None

(Local #1281)

GLAZIER - REPAIR & MAINTENANCE
(For the Installation of Glass - All repair and maintenance work on a particular building.)

Craft Jurisdiction for repair, maintenance and fabrication

Plate glass replacement, Storm windows and storm doors, Herculite door repairs, Door closer repairs, Glass tinting.

Effective Period: 7/1/2024 - 6/30/2025
Wage Rate per Hour: $27.45
Supplemental Benefit Rate per Hour: $27.93

Overtime

Time and one half the regular rate after an 8 hour day.
Double time the regular rate for Sunday.
Time and one half the regular rate for work on the following holiday(s).
Time and one half the regular hourly rate after 40 straight time hours in any work week.

Paid Holidays

New Year's Day
President's Day
Memorial Day
Independence Day
Labor Day
Thanksgiving Day
Day after Thanksgiving
Christmas Day
Employees must work at least one day in the payroll week in which the holiday occurs to receive the paid holiday

(Local #1281)

HAZARDOUS MATERIAL HANDLER

(Removal, abatement, encapsulation or decontamination of asbestos, lead, mold, or other toxic or hazardous waste/materials)

Handler

Effective Period: 7/1/2024 - 6/30/2025
Wage Rate per Hour: $39.00
Supplemental Benefit Rate per Hour: $21.65

Overtime

Time and one half the regular rate after an 8 hour day.
Time and one half the regular rate for Sunday.
Time and one half the regular hourly rate after 40 straight time hours in any work week.

Overtime Holidays

Time and one half the regular rate for work on the following holiday(s).
New Year's Day
Good Friday
Memorial Day
Independence Day
Labor Day
Thanksgiving Day
Christmas Day
Easter

Paid Holidays
None

(Local #78 and Local #12A)

HEAT AND FROST INSULATOR

Heat & Frost Insulator

Effective Period: 7/1/2024 - 6/30/2025
Wage Rate per Hour: $70.96
Supplemental Benefit Rate per Hour: $36.06

Overtime Description
Supplemental Benefit contributions are to be made at the applicable overtime rates.

Overtime
Time and one half the regular rate after an 8 hour day.
Time and one half the regular rate for Saturday.
Double time the regular rate for Sunday.

Overtime Holidays
Double time the regular rate for work on the following holiday(s).
New Year's Day
Martin Luther King Jr. Day
President's Day
Memorial Day
Independence Day
Columbus Day
Veteran's Day
Thanksgiving Day
Day after Thanksgiving
Christmas Day

Triple time the regular rate for work on the following holiday(s).
Labor Day

Paid Holidays
None

Shift Rates
The first shift shall work seven hours at the regular straight time rate. The second and third shift shall work seven hours the regular straight time hourly rate plus a fourteen percent wage and benefit premium. There must be a first shift to work the second shift, and a second shift to work the third shift. Off-hour jobs in occupied buildings may be worked on weekdays with an increment of one-dollar ($1.00) per hour and eight (8) hours pay for seven (7) hours worked.

(Local #12) (BCA)

HOUSE WRECKER
(TOTAL DEMOLITION)

House Wrecker - Tier A

On all work sites the first, second, eleventh and every third House Wrecker thereafter will be Tier A House Wreckers (i.e. 1st, 2nd, 11th, 14th etc). Other House Wreckers may be Tier B House Wreckers.

Effective Period: 7/1/2024 - 6/30/2025
Wage Rate per Hour: $39.48
Supplemental Benefit Rate per Hour: $31.92

House Wrecker - Tier B

Effective Period: 7/1/2024 - 6/30/2025
Wage Rate per Hour: $28.71
Supplemental Benefit Rate per Hour: $24.33

Overtime
Time and one half the regular rate after an 8 hour day.
Time and one half the regular rate for Saturday.
Double time the regular rate for Sunday.

Overtime Holidays
Double time the regular rate for work on the following holiday(s).
New Year's Day
President's Day
Memorial Day
Independence Day
Labor Day
Thanksgiving Day
Christmas Day

Paid Holidays
None

(Mason Tenders District Council)

IRON WORKER - ORNAMENTAL

Iron Worker - Ornamental

Effective Period: 7/1/2024 - 6/30/2025
Wage Rate per Hour: $47.65
Supplemental Benefit Rate per Hour: $65.75
Supplemental Note: Supplemental benefits are to be paid at the applicable overtime rate when overtime is in effect.

Overtime Description

Monday through Friday- the first eight hours are paid at straight time, the 9th and 10th hours are paid at time and one-half the regular rate, all additional weekday overtime is paid at double the regular rate. Saturdays- the first eight hours are paid at time and one-half the regular rate, double time thereafter. Sunday-all shifts are paid at double time. Four Days a week at Ten (10) hours straight time is allowed

Overtime

Double time the regular rate for Sunday.

Overtime Holidays

Double time the regular rate for work on the following holiday(s).
New Year's Day
President's Day
Memorial Day
Independence Day
Labor Day
Thanksgiving Day
Christmas Day

Paid Holidays

None

Shift Rates

When two or three shifts are employed on a job, Monday through Friday, each shift will be paid eight (8) hours at the straight time rate for eight (8) hours of work; at time and one-half the regular straight time rate for the first two (2) hours of overtime worked beyond eight (8) hours; and at double time for all work thereafter. When it is not possible to conduct alteration or repair work during regular working hours in a building occupied by tenants, eight (8) hours will be paid at straight time rate for seven (7) hours of work, and all overtime shall be paid at time and one-half the regular straight time rates. On Saturday, Sundays and Holidays, time and one-half the regular straight time rate shall be paid for all work up to seven (7) hours and double time shall be paid for all work thereafter.

(Local #580)

IRON WORKER - STRUCTURAL

Iron Worker - Structural

Effective Period: 7/1/2024 - 6/30/2025
Wage Rate per Hour: $58.20
Supplemental Benefit Rate per Hour: $89.27
Supplemental Note: Supplemental benefits are to be paid at the applicable overtime rate when overtime is in effect.

Overtime Description

Monday through Friday- the first eight hours are paid at straight time, the 9th and 10th hours are paid at time and one-half the regular rate, all additional weekday overtime is paid at double the regular rate. Saturdays- the first eight hours are paid at time and one-half the regular rate, double time thereafter. Sunday-all shifts are paid at double time. Four Days a week at Ten (10) hours straight time is allowed.

Overtime

Time and one half the regular rate after an 8 hour day.
Time and one half the regular rate for Saturday.
Double time the regular rate for Sunday.

Overtime Holidays

Double time the regular rate for work on the following holiday(s).
New Year's Day
President's Day
Memorial Day
Independence Day
Labor Day
Thanksgiving Day
Christmas Day

Paid Holidays

1/2 day on Christmas Eve if work is performed in the A.M.
1/2 day on New Year's Eve if work is performed in the A.M.

Shift Rates

Monday through Friday - First Shift: First eight hours are paid at straight time, the 9th & 10th hours are paid at time and a half, double time paid thereafter. Second and third Shifts: First eight hours are paid at time and one-half, double time thereafter. Saturdays: All shifts, first eight hours paid at time and one-half, double time thereafter: Sunday all shifts are paid at double time.

Four (4), ten (10) hour days may be worked at straight time during a week, Monday thru Thursday.

(Local #40 & #361)

LABORER – HEAVY & HIGHWAY

(Foundation, Concrete, Excavating, Street Pipe Layer and Common)

Laborer - Heavy & Highway

Excavation and foundation work for buildings, heavy construction, street pipe laying, engineering work, and hazardous waste removal in connection with the above work. Landscaping tasks in connection with heavy construction work, engineering work and building projects. Projects include, but are not limited to pollution plants, sewers, parks, subways, bridges, highways, etc. In accordance with the Comptroller's Prevailing Wage Memorandum Regarding Flag Persons dated June 1, 2024, for City public work contracts and subcontracts solicited on or after July 1, 2024 only, includes traffic control duty associated with such projects.

Effective Period: 7/1/2024 - 6/30/2025
Wage Rate per Hour: $45.00
Supplemental Benefit Rate per Hour: $54.03

Overtime

Time and one half the regular rate after an 8 hour day.
Time and one half the regular rate for Saturday.
Double time the regular rate for Sunday.

Overtime Holidays

Double time the regular rate for work on the following holiday(s).
New Year's Day
Memorial Day
Independence Day
Labor Day
Columbus Day
Thanksgiving Day
Christmas Day

Paid Holidays

Labor Day
Thanksgiving Day

Shift Rates

When two shifts are employed, single time rate shall be paid for each shift. When three shifts are found necessary, each shift shall work seven and one half hours (7 ½), but shall be paid for eight (8) hours of labor, and be permitted one half hour for lunch.

(Local #731)

LABORER - PAVER & ROADBUILDER

Laborer - Paver & Roadbuilder

Paving and road construction work, regardless of material used, including but not limited to preparation of job sites, removal of old surfaces, asphalt and/or concrete, by whatever method, including but not limited to milling; laying of concrete; laying of asphalt for temporary, patchwork, and utility paving (but not production paving); site preparation and incidental work for installation of rubberized materials and similar surfaces; installation and repair of temporary construction fencing; slurry/seal coating, paving stones, maintenance of safety surfaces; play equipment installation, and other related work. In accordance with the Comptroller's Prevailing Wage Memorandum Regarding Flag Persons dated June 1, 2024, for City public work contracts and subcontracts solicited on or after July 1, 2024 only, includes traffic control duty associated with such projects.

Effective Period: 7/1/2024 - 6/30/2025
Wage Rate per Hour: $45.48
Supplemental Benefit Rate per Hour: $53.55
Supplemental Note: For time and one half overtime - $58.18 For double overtime - $62.80

Paver & Roadbuilder - Formsetter

Effective Period: 7/1/2024 - 6/30/2025
Wage Rate per Hour: $49.35
Supplemental Benefit Rate per Hour: $53.55
Supplemental Note: For time and one half overtime - $58.18 For double overtime - $62.80

Production Paver & Roadbuilder - Shoveler

General laborer (except removal of surfaces - see Paver and Roadbuilder-Laborer) including but not limited to tamper, AC paint and liquid tar work.

Effective Period: 7/1/2024 - 6/30/2025
Wage Rate per Hour: $45.48
Supplemental Benefit Rate per Hour: $53.55
Supplemental Note: For time and one half overtime - $58.18 For double overtime - $62.80

Production Paver & Roadbuilder - Raker

Effective Period: 7/1/2024 - 6/30/2025
Wage Rate per Hour: $49.35
Supplemental Benefit Rate per Hour: $53.55
Supplemental Note: For time and one half overtime - $58.18 For double overtime - $62.80

Production Paver & Roadbuilder - Screed Person

(Production paving is asphalt paving when using a paving machine or on a project where a paving machine is traditionally used)

Adjustment of paving machinery on production paving jobs.

Effective Period: 7/1/2024 - 6/30/2025

Wage Rate per Hour: $49.95
Supplemental Benefit Rate per Hour: $53.55
Supplemental Note: For time and one half overtime - $58.18 For double overtime - $62.80

Overtime Description
If an employee works New Year's Day or Christmas Day, they receive the single time rate plus 25%.

For Paid Holidays: Holiday pay for all holidays shall be prorated based two hours per day for each day worked in the holiday week, not to exceed 8 hours of holiday pay.

Overtime
Time and one half the regular rate after an 8 hour day.
Time and one half the regular rate for Saturday.
Double time the regular rate for Sunday.

Overtime Holidays
Double time the regular rate for work on the following holiday(s).
Memorial Day
Independence Day
Labor Day
Columbus Day
Thanksgiving Day

Paid Holidays
Memorial Day
Independence Day
Labor Day
Thanksgiving Day

Shift Rates
When two shifts are employed, the work period for each shift shall be a continuous eight (8) hours. When three shifts are employed, each shift will work seven and one half (7 ½) hours but will be paid for eight (8) hours at the straight time rate since only one half (1/2) hour is allowed for meal time.
When two or more shifts are employed, single time will be paid for each shift.

(Local #1010)

LABORER - PAVER & ROADBUILDER LINE STRIPING (ROADWAY)
(Painting of traffic lines on roadways)

Striping - Machine Operator

Effective Period: 7/1/2024 - 6/30/2025

Wage Rate per Hour: $41.00
Supplemental Benefit Rate per Hour: $19.27
Supplemental Note: For time and one half overtime - $20.52 For double overtime - $21.77

Lineperson (Thermoplastic)

Effective Period: 7/1/2024 - 6/30/2025
Wage Rate per Hour: $45.00
Supplemental Benefit Rate per Hour: $19.27
Supplemental Note: For time and one half overtime - $20.52 For double overtime - $21.77

Laborer Striping Assistant & Traffic Safety

In accordance with the Comptroller's Prevailing Wage Memorandum Regarding Flag Persons dated June 1, 2024, for City public work contracts and subcontracts solicited on or after July 1, 2024 only, includes traffic control duty associated with such projects.

Effective Period: 7/1/2024 - 6/30/2025
Wage Rate per Hour: $39.00
Supplemental Benefit Rate per Hour: $19.27
Supplemental Note: For time and one half overtime - $20.52 For double overtime - $21.77

Overtime Description

For Paid Holidays: Employees will only receive Holiday Pay for holidays not worked if said employee worked both the regularly scheduled workday before and after the holiday.

Overtime

Time and one half the regular rate after an 8 hour day.
Time and one half the regular rate for Saturday.
Time and one half the regular rate for Sunday.
Time and one half the regular rate for work on the following holiday(s).

Paid Holidays

New Year's Day
Good Friday
Memorial Day
Independence Day
Labor Day
Columbus Day
Presidential Election Day
Thanksgiving Day
Christmas Day

(Local #1010)

LANDSCAPING

(Landscaping tasks, such as tree pruning, tree removing and spraying in connection with Green Infrastructure maintenance and the planting of street trees and trees in City parks, but not when such activities are performed as part of construction or reconstruction projects.)

Landscaper (Year 6 and above)

Effective Period: 7/1/2024 - 6/30/2025
Wage Rate per Hour: $37.77
Supplemental Benefit Rate per Hour: $18.05

Landscaper (Year 3 - 5)

Effective Period: 7/1/2024 - 6/30/2025
Wage Rate per Hour: $36.56
Supplemental Benefit Rate per Hour: $18.05

Landscaper (up to 3 years)

Effective Period: 7/1/2024 - 6/30/2025
Wage Rate per Hour: $33.55
Supplemental Benefit Rate per Hour: $18.05

Groundperson

Effective Period: 7/1/2024 - 6/30/2025
Wage Rate per Hour: $33.55
Supplemental Benefit Rate per Hour: $18.05

Tree Remover / Pruner

Effective Period: 7/1/2024 - 6/30/2025
Wage Rate per Hour: $43.81
Supplemental Benefit Rate per Hour: $18.05

Landscaper Sprayer (Pesticide Applicator)

Effective Period: 7/1/2024 - 6/30/2025
Wage Rate per Hour: $31.75
Supplemental Benefit Rate per Hour: $18.05

Watering - Plant Maintainer

Effective Period: 7/1/2024 - 6/30/2025

Wage Rate per Hour: $25.69
Supplemental Benefit Rate per Hour: $18.05

Overtime Description
For all overtime work performed, supplemental benefits shall include an additional seventy-five ($0.75) cents per hour.

Overtime
Time and one half the regular rate after an 8 hour day.
Time and one half the regular rate for Saturday.
Double time the regular rate for Sunday.
Time and one half the regular rate for work on a holiday plus the day's pay.

Paid Holidays
New Year's Day
Memorial Day
Independence Day
Labor Day
Thanksgiving Day
Christmas Day

Shift Rates
Work performed on a 4pm to 12am shift has a 15% differential. Work performed on a 12am to 8am shift has a 20% differential.

(Local #175)

MARBLE MECHANIC

Marble Setter

Effective Period: 7/1/2024 - 6/30/2025
Wage Rate per Hour: $58.92
Supplemental Benefit Rate per Hour: $44.01

Marble Finisher

Effective Period: 7/1/2024 - 6/30/2025
Wage Rate per Hour: $45.44
Supplemental Benefit Rate per Hour: $41.06

Marble Polisher

Effective Period: 7/1/2024 - 6/30/2025
Wage Rate per Hour: $44.47

Supplemental Benefit Rate per Hour: $33.96

Marble Maintenance Finisher

Effective Period: 7/1/2024 - 6/30/2025
Wage Rate per Hour: $27.72
Supplemental Benefit Rate per Hour: $15.31

Overtime Description
Supplemental Benefit contributions are to be made at the applicable overtime rates.

Overtime
Time and one half the regular rate after an 8 hour day.
Time and one half the regular rate for Saturday.
Double time the regular rate for Sunday.

Overtime Holidays
Double time the regular rate for work on the following holiday(s).
New Year's Day
President's Day
Good Friday
Memorial Day
Independence Day
Labor Day
Columbus Day
Veteran's Day
Thanksgiving Day
Day after Thanksgiving
Christmas Day

Paid Holidays
None

(Local #7)

MASON TENDER
Building Laborer

Mason Tender

Effective Period: 7/1/2024 - 6/30/2025
Wage Rate per Hour: $41.45
Supplemental Benefit Rate per Hour: $33.24

Overtime

Time and one half the regular rate after an 8 hour day.
Time and one half the regular rate for Saturday.
Double time the regular rate for Sunday.
Saturday may be used as a make-up day at straight time when a day is lost during that week to inclement weather.

Overtime Holidays

Double time the regular rate for work on the following holiday(s).
New Year's Day
President's Day
Memorial Day
Independence Day
Labor Day
Thanksgiving Day
Christmas Day

Paid Holidays

None

Shift Rates

The employer may work two (2) shifts with the first shift at the straight time wage rate and the second shift receiving eight (8) hours paid for seven (7) hours work at the straight time wage rate. When it is not possible to conduct alteration work during regular working hours in a building occupied by tenants, the rule for the second shift will apply.

(Local #79)

MASON TENDER (INTERIOR DEMOLITION WORKER)

Mason Tender Tier A

Tier A Interior Demolition Worker performs all burning, chopping, and other technically skilled tasks related to interior demolition work.

Effective Period: 7/1/2024 - 6/30/2025
Wage Rate per Hour: $38.00
Supplemental Benefit Rate per Hour: $26.54

Mason Tender Tier B

Tier B Interior Demolition Worker performs manual work and work incidental to demolition work, such as loading and carting of debris from the work site to an area where it can be loaded in to bins/trucks for removal. Also performs clean-up of the site when demolition is completed.

Effective Period: 7/1/2024 - 6/30/2025

Wage Rate per Hour: $27.19
Supplemental Benefit Rate per Hour: $20.86

Overtime
Time and one half the regular rate after an 8 hour day.
Time and one half the regular rate for Sunday.

Overtime Holidays
Double time the regular rate for work on the following holiday(s).
New Year's Day
President's Day
Memorial Day
Independence Day
Labor Day
Thanksgiving Day
Christmas Day

Paid Holidays
None

(Local #79)

METALLIC LATHER

Metallic Lather

Effective Period: 7/1/2024 - 6/30/2025
Wage Rate per Hour: $46.45
Supplemental Benefit Rate per Hour: $54.80
Supplemental Note: For time and one half overtime - $66.55 For double overtime - $86.60

Overtime
Time and one half the regular rate after an 8 hour day.
Time and one half the regular rate for Saturday.
Double time the regular rate for Sunday.

Overtime Holidays
Double time the regular rate for work on the following holiday(s).
New Year's Day
President's Day
Memorial Day
Independence Day
Labor Day
Columbus Day
Thanksgiving Day
Christmas Day

Paid Holidays
1/2 day on Christmas Eve if work is performed in the A.M.
1/2 day on New Year's Eve if work is performed in the A.M.

Shift Rates
Off-shift work outside of normal working hours shall receive straight time rate plus $12 per hour for the first eight (8) hours.

(Local #46)

MILLWRIGHT

Millwright

Effective Period: 7/1/2024 - 6/30/2025
Wage Rate per Hour: $59.35
Supplemental Benefit Rate per Hour: $58.67

Overtime
Time and one half the regular rate after an 8 hour day.
Time and one half the regular rate for Saturday.
Double time the regular rate for Sunday.
Saturday may be used as a make-up day at straight time when a day is lost during that week to inclement weather.

Overtime Holidays
Double time the regular rate for work on the following holiday(s).
New Year's Day
President's Day
Good Friday
Memorial Day
Independence Day
Labor Day
Columbus Day
Presidential Election Day
Veteran's Day
Thanksgiving Day
Christmas Day

Paid Holidays
1/2 day on Christmas Eve if work is performed in the A.M.
1/2 day on New Year's Eve if work is performed in the A.M.

Shift Rates

Second and third shifts receives the straight time rate of pay plus fifteen (15%) percent allowing for one half hour for a meal. There must be a first shift to work a second and third shift. All additional hours worked shall be paid at the time and one-half rate of pay plus fifteen (15%) percent for weekday hours.

(Local #740)

MOSAIC MECHANIC

Mosaic Mechanic - Mosaic & Terrazzo Mechanic

Effective Period: 7/1/2024 - 6/30/2025
Wage Rate per Hour: $53.98
Supplemental Benefit Rate per Hour: $47.12

Mosaic Mechanic - Mosaic & Terrazzo Finisher

Effective Period: 7/1/2024 - 6/30/2025
Wage Rate per Hour: $52.37
Supplemental Benefit Rate per Hour: $47.12

Mosaic Mechanic - Machine Operator Grinder

Effective Period: 7/1/2024 - 6/30/2025
Wage Rate per Hour: $52.37
Supplemental Benefit Rate per Hour: $47.12

Overtime

Time and one half the regular rate after an 8 hour day.
Time and one half the regular rate for Saturday.
Double time the regular rate for Sunday.

Overtime Holidays

Double time the regular rate for work on the following holiday(s).
New Year's Day
Washington's Birthday
Good Friday
Independence Day
Labor Day
Columbus Day
Veteran's Day
Thanksgiving Day
Day after Thanksgiving
Christmas Day

Paid Holidays

None

(Local #7)

PAINTER

Painter - Brush & Roller

Effective Period: 7/1/2024 - 6/30/2025
Wage Rate per Hour: $44.00
Supplemental Benefit Rate per Hour: $42.46
Supplemental Note: $50.56 on overtime

Spray & Scaffold / Decorative / Sandblast

Effective Period: 7/1/2024 - 6/30/2025
Wage Rate per Hour: $47.00
Supplemental Benefit Rate per Hour: $42.46
Supplemental Note: $50.56 on overtime

Overtime
Time and one half the regular rate after a 7 hour day.
Time and one half the regular rate for Saturday.
Time and one half the regular rate for Sunday.

Overtime Holidays
Double time the regular rate for work on the following holiday(s).
New Year's Day
President's Day
Memorial Day
Independence Day
Labor Day
Thanksgiving Day
Day after Thanksgiving
Christmas Day

Paid Holidays
None

(District Council of Painters #9)

PAINTER - BRIDGE & STRUCTURAL STEEL

Painters on Structural Steel

Effective Period: 7/1/2024 - 6/30/2025
Wage Rate per Hour: $56.00
Supplemental Benefit Rate per Hour: $52.78

Painter - Power Tool

Effective Period: 7/1/2024 - 6/30/2025
Wage Rate per Hour: $63.00
Supplemental Benefit Rate per Hour: $52.78
Overtime Wage Rate: $6.50 above the "Painters on Structural Steel" overtime rate.

Overtime Description
Supplemental Benefits shall be paid for each hour worked, up to forty (40) hours per week for the period of May 1st to November 15th or up to fifty (50) hours per week for the period of November 16th to April 30th.

Overtime
Time and one half the regular rate after an 8 hour day.
Time and one half the regular rate for Saturday.
Time and one half the regular rate for Sunday.

Overtime Holidays
Double time the regular rate for work on the following holiday(s).
New Year's Day
Memorial Day
Independence Day
Labor Day
Thanksgiving Day
Christmas Day

Paid Holidays
None

Shift Rates
Second shift is paid at regular hourly wage rates plus a ten percent (10%) differential. There must be a first shift to work a second shift.

(Local #806)

PAINTER - METAL POLISHER

METAL POLISHER

Effective Period: 7/1/2024 - 6/30/2025
Wage Rate per Hour: $34.00
Supplemental Benefit Rate per Hour: $12.36

METAL POLISHER - NEW CONSTRUCTION

Effective Period: 7/1/2024 - 6/30/2025
Wage Rate per Hour: $34.95
Supplemental Benefit Rate per Hour: $12.36

METAL POLISHER - SCAFFOLD OVER 34 FEET

Effective Period: 7/1/2024 - 6/30/2025
Wage Rate per Hour: $37.50
Supplemental Benefit Rate per Hour: $12.36

ASSISTANT METAL POLISHER

Effective Period: 7/1/2024 - 6/30/2025
Wage Rate per Hour: $26.50
Supplemental Benefit Rate per Hour: $11.92

ASSISTANT METAL POLISHER - NEW CONSTRUCTION

Effective Period: 7/1/2024 - 6/30/2025
Wage Rate per Hour: $27.25
Supplemental Benefit Rate per Hour: $11.92

ASSISTANT METAL POLISHER - SCAFFOLD OVER 34 FEET

Effective Period: 7/1/2024 - 6/30/2025
Wage Rate per Hour: $29.00
Supplemental Benefit Rate per Hour: $11.92

Overtime Description

All work performed on Saturdays shall be paid at time-in-a half. The exception being; for suspended scaffold work and work deemed as a construction project; an eight (8) hour shift lost during the week due to circumstances beyond the control of the employer, up to a maximum of eight (8) hours per week, may be worked on Saturday at the straight time rate.

Holiday Pay
Double time the regular rate for work on the following Holiday plus the day's pay. Only employees who have completed one year of service, including any trial period shall be eligible for holiday pay.

Overtime
Time and one half the regular rate after an 8 hour day.
Time and one half the regular rate for Saturday.
Double time the regular rate for Sunday.
Saturday may be used as a make-up day at straight time when a day is lost during that week to inclement weather.

Paid Holidays
New Year's Day
Martin Luther King Jr. Day
President's Day
Memorial Day
Independence Day
Labor Day
Columbus Day
Veteran's Day
Thanksgiving Day
Day after Thanksgiving
Christmas Day

Shift Rates
Four Days a week at Ten (10) hours straight a day.

Local 8A-28A

PAINTER - SIGN

Sign Painter

Effective Period: 7/1/2024 - 6/30/2025
Wage Rate per Hour: $48.07
Supplemental Benefit Rate per Hour: $27.25

Assistant Sign Painter

Effective Period: 7/1/2024 - 6/30/2025
Wage Rate per Hour: $40.85
Supplemental Benefit Rate per Hour: $25.90

Overtime Description
If any employee is required to work on any of the paid holidays then the employee shall receive double time rate of wages as well as the holiday pay for that day.

Overtime
Time and one half the regular rate after an 8 hour day.
Time and one half the regular rate for Saturday.

Time and one half the regular rate for Sunday.

Paid Holidays

New Year's Day
President's Day
Memorial Day
Independence Day
Labor Day
Columbus Day
Election Day
Thanksgiving Day
Day after Thanksgiving
Christmas Day

Vacation

At least 1 year of employment.....1 week
2 years or more of employment.....2 weeks
8 years or more of employment.....3 weeks

(Local #8A-28A)

PAPERHANGER

Paperhanger

Effective Period: 7/1/2024 - 6/30/2025
Wage Rate per Hour: $48.02
Supplemental Benefit Rate per Hour: $43.14
Supplemental Note: Supplemental benefits are to be paid at the appropriate straight time and overtime rate.

Overtime

Time and one half the regular rate after a 7 hour day.
Time and one half the regular rate for Saturday.
Double time the regular rate for Sunday.

Overtime Holidays

Double Time the regular rate for work on the following holiday(s).
New Year's Day
President's Day
Memorial Day
Independence Day
Labor Day
Thanksgiving Day
Day after Thanksgiving
Christmas Day

Paid Holidays

None

Shift Rates

Evening shift - 4:30 P.M. to 12:00 Midnight (regular rate of pay); any work performed before 7:00 A.M. shall be at time and one half the regular base rate of pay.

(District Council of Painters #9)

PAVER AND ROADBUILDER

SEE LABORER - PAVER AND ROADBUILDER

PAVER AND ROADBUILDER - LINE STRIPING (ROADWAY)

SEE LABORER - PAVER AND ROADBUILDER - LINE STRIPING (ROADWAY)

PLASTERER

Plasterer

Effective Period: 7/1/2024 - 7/31/2024
Wage Rate per Hour: $52.10
Supplemental Benefit Rate per Hour: $25.35

Effective Period: 8/1/2024 - 6/30/2025
Wage Rate per Hour: $52.99
Supplemental Benefit Rate per Hour: $26.10

Overtime

Time and one half the regular rate after an 8 hour day.
Time and one half the regular rate for Saturday.
Double time the regular rate for Sunday.
Saturday may be used as a make-up day at straight time when a day is lost during that week to inclement weather.

Overtime Holidays

Double time the regular rate for work on the following holiday(s).
New Year's Day
President's Day
Memorial Day
Independence Day
Labor Day
Thanksgiving Day
Christmas Day

Paid Holidays

None

Shift Rates

When it is not possible to conduct work during regular working hours (between 6:30am and 4:30pm), a shift differential shall be paid at the regular hourly rate plus a twelve percent (12%) per hour differential. Workers on shift work shall be allowed a paid one-half hour meal break.

(Local #262)

PLASTERER - TENDER

Plasterer - Tender

Effective Period: 7/1/2024 - 6/30/2025
Wage Rate per Hour: $41.45
Supplemental Benefit Rate per Hour: $33.24

Overtime

Time and one half the regular rate after an 8 hour day.
Time and one half the regular rate for Saturday.
Double time the regular rate for Sunday.
Saturday may be used as a make-up day at straight time when a day is lost during that week to inclement weather.

Overtime Holidays

Double time the regular rate for work on the following holiday(s).
New Year's Day
Washington's Birthday
Memorial Day
Independence Day
Labor Day
Presidential Election Day
Thanksgiving Day
Christmas Day

Paid Holidays
None

Shift Rates
When work commences outside regular work hours, workers receive an hour additional (differential) wage and supplement payment. Eight hours pay for seven hours work or nine hours pay for eight hours work.

(Mason Tenders District Council)

PLUMBER

Plumber

Effective Period: 7/1/2024 - 6/30/2025
Wage Rate per Hour: **$74.95**
Supplemental Benefit Rate per Hour: **$43.00**
Supplemental Note: Supplemental benefit contributions are to be made at the applicable overtime rates.

Plumber - Temporary Services

Temporary Services - When there are no Plumbers on the job site, there may be three shifts designed to cover the entire twenty-four hour period, including weekends if necessary, at the following rate straight time.

Effective Period: 7/1/2024 - 6/30/2025
Wage Rate per Hour: **$60.04**
Supplemental Benefit Rate per Hour: **$34.32**

Overtime Description
Where the plumbing contract price is one and one half million dollars ($1,500,000.00) or less, double time the regular rate after an 8 hour day.

Overtime
Double time the regular rate after a 7 hour day.
Double time the regular time rate for Saturday.
Double time the regular rate for Sunday.

Overtime Holidays
Double time the regular rate for work on the following holiday(s).
New Year's Day
President's Day
Memorial Day
Independence Day
Labor Day
Columbus Day
Veteran's Day

Thanksgiving Day
Day after Thanksgiving
Christmas Day

Shift Rates

30% shift premium shall be paid for wages and fringe benefits for 4:00 pm and midnight shifts Monday to Friday. 50% shift premium shall be paid for wages and fringe benefits for 4:00 pm and midnight shift work performed on weekends. For shift work on holidays, double time wages and fringe benefits shall be paid.

(Plumbers Local #1)

PLUMBER (MECHNICAL EQUIPMENT AND SERVICE)

(Mechanical Equipment and Service work shall include any repair and/or replacement of the present plumbing system.)

Plumber

Effective Period: 7/1/2024 - 6/30/2025
Wage Rate per Hour: $48.20
Supplemental Benefit Rate per Hour: $21.36

Overtime

Time and one half the regular rate after an 8 hour day.
Time and one half the regular rate for Saturday.
Time and one half the regular rate for Sunday.

Overtime Holidays

Double time the regular rate for work on the following holiday(s).
New Year's Day
President's Day
Memorial Day
Independence Day
Thanksgiving Day
Day after Thanksgiving
Christmas Day

Paid Holidays

None

(Plumbers Local # 1)

PLUMBER (RESIDENTIAL RATES FOR 1, 2 AND 3 FAMILY HOME CONSTRUCTION)

Effective Period: 7/1/2024 - 6/30/2025
Wage Rate per Hour: $52.07
Supplemental Benefit Rate per Hour: $30.82

Overtime
Double time the regular rate after an 8 hour day.
Double time the regular time rate for Saturday.
Double time the regular rate for Sunday.

Overtime Holidays
Double time the regular rate for work on the following holiday(s).
New Year's Day
President's Day
Memorial Day
Independence Day
Labor Day
Columbus Day
Veteran's Day
Thanksgiving Day
Day after Thanksgiving
Christmas Day

Paid Holidays
None

Shift Rates
30% shift premium shall be paid for wages and fringe benefits for 4:00 pm and midnight shifts Monday to Friday. 50% shift premium shall be paid for wages and fringe benefits for 4:00 pm and midnight shift work performed on weekends. For shift work on holidays, double time wages and fringe benefits shall be paid.

(Plumbers Local #1)

PLUMBER: PUMP & TANK
Oil Trades (Installation and Maintenance)

Plumber - Pump & Tank

Effective Period: 7/1/2024 - 6/30/2025
Wage Rate per Hour: $73.00

Supplemental Benefit Rate per Hour: $32.81

Overtime
Time and one half the regular rate after an 8 hour day.
Time and one half the regular rate for Saturday.
Time and one half the regular rate for Sunday.

Overtime Holidays
Time and one half the regular rate for work on the following holiday(s).
New Year's Day
President's Day
Memorial Day
Independence Day
Labor Day
Columbus Day
Veteran's Day
Thanksgiving Day
Day after Thanksgiving
Christmas Day

Paid Holidays
None

Shift Rates
All work outside the regular workday (8:00 A.M. to 3:30 P.M.) is to be paid at time and one half the regular hourly rate

(Plumbers Local #1)

POINTER, WATERPROOFER, CAULKER, SANDBLASTER, STEAMBLASTER
(Exterior Building Renovation)

Journeyperson

Effective Period: 7/1/2024 - 6/30/2025
Wage Rate per Hour: $63.43
Supplemental Benefit Rate per Hour: $31.50

Overtime
Time and one half the regular rate after an 8 hour day.
Time and one half the regular rate for Saturday.
Time and one half the regular rate for Sunday.

Saturday may be used as a make-up day at straight time when a day is lost during that week to inclement weather.

Overtime Holidays

Time and one half the regular rate for work on the following holiday(s).
New Year's Day
Martin Luther King Jr. Day
President's Day
Memorial Day
Independence Day
Labor Day
Thanksgiving Day
Christmas Day

Paid Holidays

None

Shift Rates

All work outside the regular work day (an eight hour workday between the hours of 6:00 A.M. and 4:00 P.M.) is to be paid at time and one half the regular rate. However, the employer may establish one (1) or two (2) shifts starting at or after 4:00 P.M. to be paid at the regular hourly rate plus a 10% differential. For projects bid and performed after July 1, 2023, the first shift shall be paid at the regular hourly rate plus a 5% differential.

(Bricklayer District Council)

ROOFER

Roofer

Effective Period: 7/1/2024 - 6/30/2025
Wage Rate per Hour: $48.50
Supplemental Benefit Rate per Hour: $38.81

Overtime

Time and one half the regular rate after an 8 hour day.
Time and one half the regular rate for Saturday.
Time and one half the regular rate for Sunday.

Overtime Holidays

Time and one half the regular rate for work on the following holiday(s).
New Year's Day
Memorial Day
Independence Day
Labor Day
Thanksgiving Day
Christmas Day

Paid Holidays
None

Shift Rates
Second shift - Regular hourly rate plus a 10% differential. Third shift - Regular hourly rate plus a 15% differential. There must be a first shift to work the second shift, and a second shift to work the third shift. All other work outside the regular work day (an eight hour workday between the hours of 5:00 A.M. and 4:00 P.M.) is to be paid at time and one half the regular rate.

(Local #8)

SHEET METAL WORKER

Sheet Metal Worker

Effective Period: 7/1/2024 - 6/30/2025
Wage Rate per Hour: $53.60
Supplemental Benefit Rate per Hour: $58.43
Supplemental Note: Supplemental benefit contributions are to be made at the applicable overtime rates.

Sheet Metal Worker - Fan Maintenance

(The temporary operation of fans or blowers in new or existing buildings for heating and/or ventilation, and/or air conditioning prior to the completion of the project.)

Effective Period: 7/1/2024 - 6/30/2025
Wage Rate per Hour: $42.88
Supplemental Benefit Rate per Hour: $58.43

Sheet Metal Worker - Duct Cleaner

Effective Period: 7/1/2024 - 6/30/2025
Wage Rate per Hour: $19.57
Supplemental Benefit Rate per Hour: $12.72

Overtime
Time and one half the regular rate after an 8 hour day.
Time and one half the regular rate for Saturday.
Double time the regular rate for Sunday.

Overtime Holidays
Double time the regular rate for work on the following holiday(s).
New Year's Day
Martin Luther King Jr. Day

President's Day
Memorial Day
Independence Day
Labor Day
Columbus Day
Veteran's Day
Thanksgiving Day
Day after Thanksgiving
Christmas Day

Paid Holidays
None

Shift Rates
Work that can only be performed outside regular working hours (eight hours of work between 7:30 A.M. and 3:30 P.M.) - First shift (work between 3:30 P.M. and 11:30 P.M.) - 10% differential above the established hourly rate. Second shift (work between 11:30 P.M. and 7:30 A.M.) - 15% differential above the established hourly rate.

For Fan Maintenance: On all full shifts of fan maintenance work the straight time hourly rate of pay will be paid for each shift, including nights, Saturdays, Sundays, and holidays.

(Local #28)

SHEET METAL WORKER - SPECIALTY
(Decking & Siding)

Sheet Metal Specialty Worker

The first worker to perform this work must be paid at the rate of the Sheet Metal Worker. The second and third workers shall be paid the Specialty Worker Rate. The ratio of One Sheet Metal Worker, then Two Specialty Workers shall be utilized thereafter.

Effective Period: 7/1/2024 - 6/30/2025
Wage Rate per Hour: $50.10
Supplemental Benefit Rate per Hour: $30.04
Supplemental Note: Supplemental benefit contributions are to be made at the applicable overtime rates.

Overtime
Time and one half the regular rate after an 8 hour day.
Time and one half the regular rate for Saturday.
Double time the regular rate for Sunday.

Overtime Holidays
Double time the regular rate for work on the following holiday(s).
New Year's Day

Martin Luther King Jr. Day
President's Day
Memorial Day
Independence Day
Labor Day
Columbus Day
Veteran's Day
Thanksgiving Day
Christmas Day

Paid Holidays

None

(Local #28)

SHIPYARD WORKER

Shipyard Mechanic - First Class

Effective Period: 7/1/2024 - 6/30/2025
Wage Rate per Hour: $31.50
Supplemental Benefit Rate per Hour: $3.98

Shipyard Mechanic - Second Class

Effective Period: 7/1/2024 - 6/30/2025
Wage Rate per Hour: $23.86
Supplemental Benefit Rate per Hour: $3.77

Shipyard Laborer - First Class

Effective Period: 7/1/2024 - 6/30/2025
Wage Rate per Hour: $25.85
Supplemental Benefit Rate per Hour: $3.78

Shipyard Laborer - Second Class

Effective Period: 7/1/2024 - 6/30/2025
Wage Rate per Hour: $18.87
Supplemental Benefit Rate per Hour: $3.72

Shipyard Dockhand - First Class

Effective Period: 7/1/2024 - 6/30/2025
Wage Rate per Hour: $24.20

Supplemental Benefit Rate per Hour: $3.77

Shipyard Dockhand - Second Class

Effective Period: 7/1/2024 - 6/30/2025
Wage Rate per Hour: $19.37
Supplemental Benefit Rate per Hour: $3.63

Overtime Description
Work performed on holiday is paid double time the regular hourly wage rate plus holiday pay.

Overtime
Time and one half the regular rate after an 8 hour day.
Time and one half the regular rate for Saturday.
Double time the regular rate for Sunday.
Time and one half the regular hourly rate after 40 straight time hours in any work week.

Paid Holidays
New Year's Day
Martin Luther King Jr. Day
President's Day
Good Friday
Memorial Day
Independence Day
Labor Day
Thanksgiving Day
Day after Thanksgiving
Christmas Day

Based on Survey Data

SIGN ERECTOR
(Sheet Metal, Plastic, Electric, and Neon)

Sign Erector

Effective Period: 7/1/2024 - 6/30/2025
Wage Rate per Hour: $58.00
Supplemental Benefit Rate per Hour: $63.44

Overtime
Time and one half the regular rate after an 8 hour day.
Time and one half the regular rate for Saturday.
Time and one half the regular rate for Sunday.

Time and one half the regular rate for work on the following holiday(s).

Paid Holidays

New Year's Day
President's Day
Memorial Day
Independence Day
Labor Day
Columbus Day
Election Day
Thanksgiving Day
Day after Thanksgiving
Christmas Day

Shift Rates

Time and one half the regular hourly rate is to be paid for all hours worked outside the regular workday either (7:00 A.M. through 2:30 P.M.) or (8:00 A.M. through 3:30 P.M.)

(Local #137)

STEAMFITTER

Steamfitter

Effective Period: 7/1/2024 - 6/30/2025
Wage Rate per Hour: $61.80
Supplemental Benefit Rate per Hour: $61.14
Supplemental Note: Overtime supplemental benefit rate: $121.54

Steamfitter -Temporary Services

Effective Period: 7/1/2024 - 6/30/2025
Wage Rate per Hour: $46.97
Supplemental Benefit Rate per Hour: $49.65

Overtime Description

Double time after a 7 hour day except for Temporary Services.

Overtime

Double time the regular time rate for Saturday.
Double time the regular rate for Sunday.

Overtime Holidays

Double time the regular rate for work on the following holiday(s).
New Year's Day

President's Day
Memorial Day
Independence Day
Labor Day
Columbus Day
Veteran's Day
Thanksgiving Day
Day after Thanksgiving
Christmas Day

Paid Holidays
None

Shift Rates
May be performed outside of the regular workday except Saturday, Sunday and Holidays. When shift work is performed the wage rate for regular time worked is a 15% percent premium on wage and 15% percent premium on supplemental benefits.

Local 638

STEAMFITTER - REFRIGERATION AND AIR CONDITIONER
(Maintenance and Installation Service Person)

Refrigeration and Air Conditioner Mechanic

Effective Period: 7/1/2024 - 6/30/2025
Wage Rate per Hour: $46.10
Supplemental Benefit Rate per Hour: $21.96

Overtime
Time and one half the regular rate after an 8 hour day.
Time and one half the regular rate for Saturday.
Double time the regular rate for Sunday.

Overtime Holidays
Double time the regular rate for work on the following holiday(s).
New Year's Day
Independence Day
Labor Day
Veteran's Day
Thanksgiving Day
Christmas Day

Double time and one half the regular rate for work on the following holiday(s).
Martin Luther King Jr. Day
President's Day
Memorial Day
Columbus Day

Paid Holidays

New Year's Day
Martin Luther King Jr. Day
President's Day
Memorial Day
Independence Day
Labor Day
Columbus Day
Veteran's Day
Thanksgiving Day
Christmas Day

(Local #638-B)

STONE MASON - SETTER

Stone Mason - Setter

(Assisted by Derrickperson and Rigger)

Effective Period: 7/1/2024 - 6/30/2025
Wage Rate per Hour: $57.35
Supplemental Benefit Rate per Hour: $55.47

Overtime

Time and one half the regular rate after a 7 hour day.
Time and one half the regular rate for Saturday.
Double time the regular rate for Sunday.

Overtime Holidays

Double time the regular rate for work on the following holiday(s).
New Year's Day
Washington's Birthday
Good Friday
Memorial Day
Independence Day
Labor Day
Thanksgiving Day
Christmas Day

Paid Holidays

1/2 day on Christmas Eve if work is performed in the A.M.

Shift Rates

For all work outside the regular workday (8:00 A.M. to 3:30 P.M. Monday through Friday), the pay shall be straight time plus a ten percent (10%) differential.

(Bricklayers District Council)

TAPER

Drywall Taper

Effective Period: 7/1/2024 - 6/30/2025
Wage Rate per Hour: $48.47
Supplemental Benefit Rate per Hour: $33.51

Overtime

Time and one half the regular rate after a 7 hour day.
Time and one half the regular rate for Saturday.
Double time the regular rate for Sunday.

Overtime Holidays

Double time the regular rate for work on the following holiday(s).
New Year's Day
Martin Luther King Jr. Day
President's Day
Good Friday
Memorial Day
Independence Day
Columbus Day
Thanksgiving Day
Day before Christmas
Christmas Day
Day before New Year's Day

Paid Holidays

Labor Day

(Local #1974)

TELECOMMUNICATION WORKER

(Install/maintain/repair telecommunications cables carrying data, video, and/or voice except for installation on building construction/alteration/renovation projects.)

Telecommunication Worker

Effective Period: 7/1/2024 - 6/30/2025
Wage Rate per Hour: $47.03
Supplemental Benefit Rate per Hour: $23.15
Supplemental Note: The above rate applies for Manhattan, Bronx, Brooklyn, Queens. $22.84 for Staten Island only.

Overtime

Time and one half the regular rate after an 8 hour day.
Time and one half the regular rate for Saturday.
Time and one half the regular rate for Sunday.

Overtime Holidays

Time and one half the regular rate for work on the following holiday(s).
New Year's Day
Lincoln's Birthday
Washington's Birthday
Memorial Day
Independence Day
Labor Day
Columbus Day
Election Day
Veteran's Day
Thanksgiving Day
Christmas Day

Paid Holidays

New Year's Day
Lincoln's Birthday
Washington's Birthday
Memorial Day
Independence Day
Labor Day
Columbus Day
Election Day
Veteran's Day
Thanksgiving Day
Christmas Day
Employees have the option of observing either Martin Luther King's Birthday or the day after Thanksgiving instead of Lincoln's Birthday

Shift Rates

For any workday that starts before 8A.M. or ends after 6P.M. there is a 10% differential for the applicable worker's hourly rate.

Vacation

After 6 months.....one week.
After 12 months but less than 7 years.....two weeks.
After 7 or more but less than 15 years.....three weeks.
After 15 years or more but less than 25 years.....four weeks.

(C.W.A.)

TILE FINISHER

Tile Finisher

Effective Period: 7/1/2024 - 6/30/2025
Wage Rate per Hour: $49.46
Supplemental Benefit Rate per Hour: $32.86

Overtime

Time and one half the regular rate after an 8 hour day.
Time and one half the regular rate for Saturday.
Double time the regular rate for Sunday.

Overtime Holidays

Double time the regular rate for work on the following holiday(s).
New Year's Day
President's Day
Good Friday
Memorial Day
Independence Day
Labor Day
Columbus Day
Veteran's Day
Thanksgiving Day
Day after Thanksgiving
Christmas Day

Paid Holidays

None

Shift Rates

Off shift work day (work performed outside the regular 8:00 A.M. to 3:30 P.M. workday): shift differential of one and one quarter (1¼) times the regular straight time rate of pay for the seven hours of actual off-shift work.

(Local #7)

TILE LAYER - SETTER

Tile Layer - Setter

Effective Period: 7/1/2024 - 6/30/2025
Wage Rate per Hour: $64.40
Supplemental Benefit Rate per Hour: $36.01

Overtime
Time and one half the regular rate after an 8 hour day.
Time and one half the regular rate for Saturday.
Double time the regular rate for Sunday.

Overtime Holidays
Double time the regular rate for work on the following holiday(s).
New Year's Day
President's Day
Good Friday
Memorial Day
Independence Day
Labor Day
Columbus Day
Veteran's Day
Thanksgiving Day
Day after Thanksgiving
Christmas Day

Shift Rates
Off shift work day (work performed outside the regular 8:00 A.M. to 3:30 P.M. workday): shift differential of one and one quarter (1¼) times the regular straight time rate of pay for the seven hours of actual off-shift work.

(Local #7)

TIMBERPERSON

Timberperson

Effective Period: 7/1/2024 - 6/30/2025
Wage Rate per Hour: $55.59
Supplemental Benefit Rate per Hour: $55.41

Overtime
Time and one half the regular rate after an 8 hour day.

Time and one half the regular rate for Saturday.
Double time the regular rate for Sunday.
Saturday may be used as a make-up day at straight time when a day is lost during that week to inclement weather.

Overtime Holidays

Double time the regular rate for work on the following holiday(s).
New Year's Day
President's Day
Memorial Day
Independence Day
Labor Day
Columbus Day
Presidential Election Day
Thanksgiving Day
Christmas Day

Paid Holidays

None

Shift Rates

Off shift work commencing between 5:00 P.M. and 11:00 P.M. shall work eight and one half hours allowing for one half hour for lunch. The wage rate shall be 113% of the straight time hourly wage rate. Benefits for off-shift work shall be paid at the straight time rate.

(Local #1556)

TUNNEL WORKER

Blasters, Mucking Machine Operators (Compressed Air Rates)

Effective Period: 7/1/2024 - 6/30/2025
Wage Rate per Hour: $73.50
Supplemental Benefit Rate per Hour: $64.93

Tunnel Workers (Compressed Air Rates)

Includes shield driven liner plate portions or solidification portions work (8 hour shift) during excavation phase.

Effective Period: 7/1/2024 - 6/30/2025
Wage Rate per Hour: $70.88
Supplemental Benefit Rate per Hour: $62.88

Top Nipper (Compressed Air Rates)

Effective Period: 7/1/2024 - 6/30/2025

Wage Rate per Hour: **$69.69**
Supplemental Benefit Rate per Hour: **$61.64**

Outside Lock Tender, Outside Gauge Tender,Muck Lock Tender (Compressed Air Rates)

Effective Period: 7/1/2024 - 6/30/2025
Wage Rate per Hour: **$68.30**
Supplemental Benefit Rate per Hour: **$60.64**

Bottom Bell & Top Bell Signal Person: Shaft Person (Compressed Air Rates)

Effective Period: 7/1/2024 - 6/30/2025
Wage Rate per Hour: **$68.30**
Supplemental Benefit Rate per Hour: **$60.64**

Changehouse Attendant: Powder Watchperson (Compressed Air Rates)

Effective Period: 7/1/2024 - 6/30/2025
Wage Rate per Hour: **$60.18**
Supplemental Benefit Rate per Hour: **$56.85**

Blasters (Free Air Rates)

Effective Period: 7/1/2024 - 6/30/2025
Wage Rate per Hour: **$70.12**
Supplemental Benefit Rate per Hour: **$62.33**

Tunnel Workers (Free Air Rates)

Effective Period: 7/1/2024 - 6/30/2025
Wage Rate per Hour: **$67.08**
Supplemental Benefit Rate per Hour: **$59.73**

All Others (Free Air Rates)

Effective Period: 7/1/2024 - 6/30/2025
Wage Rate per Hour: **$62.01**
Supplemental Benefit Rate per Hour: **$55.28**

Microtunneling (Free Air Rates)

Effective Period: 7/1/2024 - 6/30/2025
Wage Rate per Hour: **$53.66**
Supplemental Benefit Rate per Hour: **$47.78**

Overtime Description

For work performed during excavation and primary concrete tunnel lining phases - Double time the regular rate after an 8 hour day and Saturday, Sunday and on the following holiday(s) listed below.
For Repair-Maintenance Work on Existing Equipment and Facilities - Time and one half the regular rate after a 8 hour day, Saturday, Sunday and double time the regular rate for work on the following holiday(s) listed below.
For Small-Bore Micro Tunneling Machines - Time and one-half the regular rate shall be paid for all overtime.
For work not listed above - Time and one half the regular rate after an 8 hour day and Saturday and double time the regular rate on Sunday and on the following holiday(s) listed below.

Paid Holidays

New Year's Day
Martin Luther King Jr. Day
President's Day
Memorial Day
Independence Day
Labor Day
Columbus Day
Veteran's Day
Thanksgiving Day
Day after Thanksgiving
Christmas Day

(Local #147)

UTILITY LOCATOR

(Locate & mark underground utilities including gas for street excavation and utility line repairs)

Utility Locator (Year 7 and above)

Effective Period: 7/1/2024 - 8/25/2024
Wage Rate per Hour: $31.56
Supplemental Benefit Rate per Hour: $1.43

Effective Period: 8/26/2024 – 6/30/2025
Wage Rate per Hour: $35.50
Supplemental Benefit Rate per Hour: $1.43

Utility Locator (Year 5 Second 6 months & Year 6)

Effective Period: 7/1/2024 - 8/25/2024
Wage Rate per Hour: $22.85
Supplemental Benefit Rate per Hour: $1.43

Effective Period: 8/26/2024 – 6/30/2025
Wage Rate per Hour: $35.50

Supplemental Benefit Rate per Hour: $1.43

Utility Locator (Year 5 fist 6 months)

Effective Period: 7/1/2024 - 8/25/2024
Wage Rate per Hour: $22.85
Supplemental Benefit Rate per Hour: $1.43

Effective Period: 8/26/2024 - 6/30/2025
Wage Rate per Hour: $34.80
Supplemental Benefit Rate per Hour: $1.43

Utility Locator (Year 4)

Effective Period: 7/1/2024 - 8/25/2024
Wage Rate per Hour: $21.54
Supplemental Benefit Rate per Hour: $1.43

Effective Period: 8/26/2024 - 6/30/2025
Wage Rate per Hour: $31.54
Supplemental Benefit Rate per Hour: $1.43

Utility Locator (Year 3)

Effective Period: 7/1/2024 - 8/25/2024
Wage Rate per Hour: $20.30
Supplemental Benefit Rate per Hour: $1.43

Effective Period: 8/26/2024 - 6/30/2025
Wage Rate per Hour: $28.28
Supplemental Benefit Rate per Hour: $1.43

Utility Locator (Year 2)

Effective Period: 7/1/2024 - 8/25/2024
Wage Rate per Hour: $19.13
Supplemental Benefit Rate per Hour: $1.43

Effective Period: 8/26/2024 - 6/30/2025
Wage Rate per Hour: $25.02
Supplemental Benefit Rate per Hour: $1.43

Utility Locator (Year 1)

Effective Period: 7/1/2024 - 8/25/2024
Wage Rate per Hour: $18.04
Supplemental Benefit Rate per Hour: $1.43

Effective Period: 8/26/2024 - 6/30/2025
Wage Rate per Hour: $21.76

Supplemental Benefit Rate per Hour: $1.43

Utility Locator (Up to 1 year)

Effective Period: 7/1/2024 - 8/25/2024
Wage Rate per Hour: $17.00
Supplemental Benefit Rate per Hour: $1.43
Supplemental Note: No benefits for the first 90 days of employment.

Effective Period: 8/26/2024 - 6/30/2025
Wage Rate per Hour: $18.50
Supplemental Benefit Rate per Hour: $1.43
Supplemental Note: No benefits for the first 90 days of employment.

Overtime
Time and one half the regular rate for work on the following holiday(s).
Time and one half the regular hourly rate after 40 straight time hours in any work week.

Paid Holidays
New Year's Day
Memorial Day
Independence Day
Thanksgiving Day
Christmas Day

Shift Rates
10% shift differential to employees working any shift starting between noon and 5 AM.

Vacation
For up to 1 year	0 hours
For year 1 - 2	48 hours per year
For year 3 - 9	96 hours per year
For year 10 or more	144 hours per year

Sick Days:
For up to 1 year employee receives 40 hours paid sick leave.
For year 1 employee earns 2 hours of paid sick leave for every 100 overtime hours worked.
For year 2 - 9 years employee earns 4 hours of paid sick leave for every 100 overtime hours worked.
For year 10 or more employee earns 6 hours of paid sick leave for every 100 overtime hours worked.

(C.W.A.)

WELDER

WELDER AND FIREWATCH TO BE PAID AT THE RATE OF THE JOURNEYPERSON OR REGISTERED APPRENTICE IN THE TRADE PERFORMING THE WORK.

OFFICE OF THE COMPTROLLER

CITY OF NEW YORK

CONSTRUCTION APPRENTICE PREVAILING WAGE SCHEDULE

Pursuant to Labor Law § 220 (3-e), only apprentices who are individually registered in a bona fide program to which the employer contractor is a participant and registered with the New York State Department of Labor, may be paid at the apprentice rates in this schedule. Apprentices who are not so registered must be paid as journey persons in accordance with the trade classification of the work they actually performed.

Apprentice ratios are established to ensure the proper safety, training and supervision of apprentices. A ratio establishes the number of journey workers required for each apprentice in a program and on a job site. Ratios are interpreted as follows: in the case of a 1:1, 1:4 ratio, there must be one journey worker for the first apprentice, and four additional journey workers for each subsequent apprentice.

TABLE OF CONTENTS

CLASSIFICATION	PAGE
BOILERMAKER	3
BRICKLAYER	4
CARPENTER	5
CARPENTER - HIGH RISE CONCRETE FORMS	5
CEMENT AND CONCRETE WORKER	6
CEMENT MASON	7
DERRICKPERSON & RIGGER (STONE)	7
DOCKBUILDER/PILE DRIVER	8
ELECTRICIAN	9
ELEVATOR CONSTRUCTOR	11
ELEVATOR REPAIR & MAINTENANCE	12
ENGINEER	13
ENGINEER - OPERATING	13
FLOOR COVERER	14
GLAZIER	15
HAZARDOUS MATERIAL HANDLER	15
HEAT & FROST INSULATOR	16
HOUSE WRECKER	17
IRON WORKER - ORNAMENTAL	17
IRON WORKER - STRUCTURAL	18
LABORER - HEAVY & HIGHWAY	19
LABORER - PAVER & ROADBUILDER	19
LABORER - PAVER AND ROADBUILDER - LINE STRIPING (ROADWAY)	20
MARBLE MECHANICS	20
MASON TENDER	22
MASON TENDER (INTERIOR DEMOLITION WORKER)	23
METALLIC LATHER	24
MILLWRIGHT	24
PAINTER	25
PAINTER - BRIDGE & STRUCTURAL STEEL	26
PAINTER - METAL POLISHER	26
PLASTERER	27
PLASTERER - TENDER	28
PLUMBER	28
POINTER, WATERPROOFER, CAULKER, SANDBLASTER, STEAMBLASTER	30
ROOFER	30
SHEET METAL WORKER	31
SIGN ERECTOR	32
STEAMFITTER	34
STEAMFITTER - REFRIGERATION & AIR CONDITIONER	34
STONE MASON - SETTER	35
TAPER	36
TILE LAYER - SETTER	37
TIMBERPERSON	38

BOILERMAKER

(Ratio of Apprentice to Journeyperson: 1 to 1, 1 to 3)

Boilermaker (First Year)

Effective Period: 7/1/2024 - 6/30/2025
Wage Rate Per Hour: 65% of Journeyperson's rate
Supplemental Benefit Rate Per Hour: $34.95

Boilermaker (Second Year: 1st Six Months)

Effective Period: 7/1/2024 - 6/30/2025
Wage Rate Per Hour: 70% of Journeyperson's rate
Supplemental Benefit Rate Per Hour: $36.99

Boilermaker (Second Year: 2nd Six Months)

Effective Period: 7/1/2024 - 6/30/2025
Wage Rate Per Hour: 75% of Journeyperson's rate
Supplemental Benefit Rate Per Hour: $39.06

Boilermaker (Third Year: 1st Six Months)

Effective Period: 7/1/2024 - 6/30/2025
Wage Rate Per Hour: 80% of Journeyperson's rate
Supplemental Benefit Rate Per Hour: $41.09

Boilermaker (Third Year: 2nd Six Months)

Effective Period: 7/1/2024 - 6/30/2025
Wage Rate Per Hour: 85% of Journeyperson's rate
Supplemental Benefit Rate Per Hour: $43.17

Boilermaker (Fourth Year: 1st Six Months)

Effective Period: 7/1/2024 - 6/30/2025
Wage Rate Per Hour: 90% of Journeyperson's rate
Supplemental Benefit Rate Per Hour: $45.23

Boilermaker (Fourth Year: 2nd Six Months)

Effective Period: 7/1/2024 - 6/30/2025
Wage Rate Per Hour: 95% of Journeyperson's rate
Supplemental Benefit Rate Per Hour: $47.28

(Local #5)

BRICKLAYER

(Ratio of Apprentice to Journeyperson: 1 to 1, 1 to 4)

Bricklayer (First 750 Hours)

Effective Period: 7/1/2024 - 6/30/2025
Wage Rate Per Hour: 50% of Journeyperson's rate
Supplemental Benefit Rate Per Hour: $27.60

Bricklayer (Second 750 Hours)

Effective Period: 7/1/2024 - 6/30/2025
Wage Rate Per Hour: 60% of Journeyperson's rate
Supplemental Benefit Rate Per Hour: $27.60

Bricklayer (Third 750 Hours)

Effective Period: 7/1/2024 - 6/30/2025
Wage Rate Per Hour: 70% of Journeyperson's rate
Supplemental Benefit Rate Per Hour: $27.60

Bricklayer (Fourth 750 Hours)

Effective Period: 7/1/2024 - 6/30/2025
Wage Rate Per Hour: 80% of Journeyperson's rate
Supplemental Benefit Rate Per Hour: $27.60

Bricklayer (Fifth 750 Hours)

Effective Period: 7/1/2024 - 6/30/2025
Wage Rate Per Hour: 90% of Journeyperson's rate
Supplemental Benefit Rate Per Hour: $27.60

Bricklayer (Sixth 750 Hours)

Effective Period: 7/1/2024 - 6/30/2025
Wage Rate Per Hour: 95% of Journeyperson's rate
Supplemental Benefit Rate Per Hour: $27.60

(Bricklayer District Council)

CARPENTER
(Ratio of Apprentice to Journeyperson: 1 to 1, 1 to 4)

Carpenter (First Year)

Effective Period: 7/1/2024 - 6/30/2025
Wage Rate Per Hour For Building Apprentice: $22.20
Supplemental Benefit Rate Per Hour For Building Apprentice: $17.70

Wage Rate Per Hour For Heavy Apprentice: $26.98
Supplemental Benefit Rate Per Hour For Heavy Apprentice: $37.89

Carpenter (Second Year)

Effective Period: 7/1/2024 - 6/30/2025
Wage Rate Per Hour For Building Apprentice: $25.20
Supplemental Benefit Rate Per Hour For Building Apprentice: $19.20

Wage Rate Per Hour For Heavy Apprentice: $32.58
Supplemental Benefit Rate Per Hour For Heavy Apprentice: $37.89

Carpenter (Third Year)

Effective Period: 7/1/2024 - 6/30/2025
Wage Rate Per Hour For Building Apprentice: $29.45
Supplemental Benefit Rate Per Hour For Building Apprentice: $22.80

Wage Rate Per Hour For Heavy Apprentice: $40.96
Supplemental Benefit Rate Per Hour For Heavy Apprentice: $37.89

Carpenter (Fourth Year)

Effective Period: 7/1/2024 - 6/30/2025
Wage Rate Per Hour For Building Apprentice: $37.33
Supplemental Benefit Rate Per Hour For Building Apprentice: $24.80

Wage Rate Per Hour For Heavy Apprentice: $49.35
Supplemental Benefit Rate Per Hour For Heavy Apprentice: $37.89

(Carpenters District Council)

CARPENTER - HIGH RISE CONCRETE FORMS
(Ratio of Apprentice to Journeyperson: 1 to 1, 2 to 5)

Carpenter - High Rise (First Year)

Effective Period: 7/1/2024 - 6/30/2025
Wage Rate per Hour: $18.27
Supplemental Benefit Rate per Hour: $17.55

Carpenter - High Rise (Second Year)

Effective Period: 7/1/2024 - 6/30/2025
Wage Rate per Hour: $24.70
Supplemental Benefit Rate per Hour: $17.68

Carpenter - High Rise (Third Year)

Effective Period: 7/1/2024 - 6/30/2025
Wage Rate per Hour: $31.28
Supplemental Benefit Rate per Hour: $17.81

Carpenter - High Rise (Fourth Year)

Effective Period: 7/1/2024 - 6/30/2025
Wage Rate per Hour: $38.90
Supplemental Benefit Rate per Hour: $17.96

(Carpenters District Council)

CEMENT AND CONCRETE WORKER

(Ratio of Apprentice to Journeyperson: 1 to 1, 1 to 3)

Cement & Concrete Worker (First 1333 hours)

Effective Period: 7/1/2024 - 6/30/2025
Wage Rate Per Hour: 53% of Journeyperson's rate
Supplemental Benefit Rate Per Hour: $16.44

Cement & Concrete Worker (Second 1333 hours)

Effective Period: 7/1/2024 - 6/30/2025
Wage Rate Per Hour: 69% of Journeyperson's rate
Supplemental Benefit Rate Per Hour: $21.72

Cement & Concrete Worker (Last 1334 hours)

Effective Period: 7/1/2024 - 6/30/2025
Wage Rate Per Hour: 85% of Journeyperson's rate
Supplemental Benefit Rate Per Hour: $23.00

(Cement Concrete Workers District Council)

CEMENT MASON
(Ratio of Apprentice to Journeyperson: 1 to 1, 1 to 4)

Cement Mason (First Year)

Effective Period: 7/1/2024 - 6/30/2025
Wage Rate per Hour: $23.39
Supplemental Benefit Rate per Hour: $14.86

Cement Mason (Second Year)

Effective Period: 7/1/2024 - 6/30/2025
Wage Rate per Hour: $28.29
Supplemental Benefit Rate per Hour: $15.16

Cement Mason (Third Year)

Effective Period: 7/1/2024 - 6/30/2025
Wage Rate per Hour: $33.69
Supplemental Benefit Rate per Hour: $15.27

(Local #780)

DERRICKPERSON & RIGGER (STONE)
(Ratio of Apprentice to Journeyperson: 1 to 1, 1 to 4)

Derrickperson & Rigger (stone) - First Year

Effective Period: 7/1/2024 - 6/30/2025
Wage Rate Per Hour: 50% of Journeyperson's rate

Supplemental Benefit Rate Per Hour: 50% of Journeyperson's rate

Derrickperson & Rigger (stone) - Second Year: 1st Six Months

Effective Period: 7/1/2024 - 6/30/2025
Wage Rate Per Hour: 70% of Journeyperson's rate
Supplemental Benefit Rate Per Hour: 75% of Journeyperson's rate

Derrickperson & Rigger (stone) - Second Year: 2nd Six Months

Effective Period: 7/1/2024 - 6/30/2025
Wage Rate Per Hour: 80% of Journeyperson's rate
Supplemental Benefit Rate Per Hour: 75% of Journeyperson's rate

Derrickperson & Rigger (stone) - Third Year

Effective Period: 7/1/2024 - 6/30/2025
Wage Rate Per Hour: 90% of Journeyperson's rate
Supplemental Benefit Rate Per Hour: 75% of Journeyperson's rate

(Local #197)

DOCKBUILDER/PILE DRIVER

(Ratio of Apprentice to Journeyperson: 1 to 1, 1 to 6)

Dockbuilder/Pile Driver (First Year)

Effective Period: 7/1/2024 - 6/30/2025
Wage Rate Per Hour: $26.98
Supplemental Benefit Rate Per Hour: $37.89

Dockbuilder/Pile Driver (Second Year)

Effective Period: 7/1/2024 - 6/30/2025
Wage Rate Per Hour: $32.58
Supplemental Benefit Rate Per Hour: $37.89

Dockbuilder/Pile Driver (Third Year)

Effective Period: 7/1/2024 - 6/30/2025
Wage Rate Per Hour: $40.96
Supplemental Benefit Rate Per Hour: $37.89

Dockbuilder/Pile Driver (Fourth Year)

Effective Period: 7/1/2024 - 6/30/2025
Wage Rate Per Hour: $49.35
Supplemental Benefit Rate Per Hour: $37.89

(Carpenters District Council)

ELECTRICIAN

(Ratio of Apprentice to Journeyperson: 1 to 1, 1 to 3)

Electrician (First Term: 0-6 Months)

Effective Period: 7/1/2024 - 6/30/2025
Wage Rate per Hour: $18.00
Supplemental Benefit Rate per Hour: $17.18
Overtime Supplemental Rate Per Hour: $18.38

Electrician (First Term: 7-12 Months)

Effective Period: 7/1/2024 - 6/30/2025
Wage Rate per Hour: $18.50
Supplemental Benefit Rate per Hour: $17.44
Overtime Supplemental Rate Per Hour: $18.67

Electrician (Second Term: 0-6 Months)

Effective Period: 7/1/2024 - 6/30/2025
Wage Rate per Hour: $19.50
Supplemental Benefit Rate per Hour: $17.97
Overtime Supplemental Rate Per Hour: $19.26

Electrician (Second Term: 7-12 Months)

Effective Period: 7/1/2024 - 6/30/2025
Wage Rate per Hour: $20.50
Supplemental Benefit Rate per Hour: $18.49
Overtime Supplemental Rate Per Hour: $19.85

Electrician (Third Term: 0-6 Months)

Effective Period: 7/1/2024 - 6/30/2025
Wage Rate per Hour: $21.50

Supplemental Benefit Rate per Hour: $19.02
Overtime Supplemental Rate Per Hour: $20.44

Electrician (Third Term: 7-12 Months)

Effective Period: 7/1/2024 - 6/30/2025
Wage Rate per Hour: $22.50
Supplemental Benefit Rate per Hour: $19.54
Overtime Supplemental Rate Per Hour: $21.03

Electrician (Fourth Term: 0-6 Months)

Effective Period: 7/1/2024 - 6/30/2025
Wage Rate per Hour: $23.50
Supplemental Benefit Rate per Hour: $20.06
Overtime Supplemental Rate Per Hour: $21.62

Electrician (Fourth Term: 7-12 Months)

Effective Period: 7/1/2024 - 6/30/2025
Wage Rate per Hour: $25.50
Supplemental Benefit Rate per Hour: $21.11
Overtime Supplemental Rate Per Hour: $22.80

Electrician (Fifth Term: 0-12 Months)

Effective Period: 7/1/2024 - 6/30/2025
Wage Rate per Hour: $27.50
Supplemental Benefit Rate per Hour: $24.79
Overtime Supplemental Rate Per Hour: $26.52

Electrician (Fifth Term: 13-18 Months)

Effective Period: 7/1/2024 - 6/30/2025
Wage Rate per Hour: $32.00
Supplemental Benefit Rate per Hour: $27.20
Overtime Supplemental Rate Per Hour: $29.23

Overtime Description

Overtime Wage paid at time and one half the regular rate

(Local #3)

ELEVATOR CONSTRUCTOR

(Ratio of Apprentice to Journeyperson: 1 to 1, 1 to 2)

Elevator (Constructor) - First Year

Effective Period: 7/1/2024 - 3/16/2025
Wage Rate Per Hour: 50% of Journeyperson's rate
Supplemental Rate Per Hour: $34.78

Effective Period: 3/17/2025 - 6/30/2025
Wage Rate Per Hour: 50% of Journeyperson's rate
Supplemental Rate Per Hour: $35.48

Elevator (Constructor) - Second Year

Effective Period: 7/1/2024 - 3/16/2025
Wage Rate Per Hour: 55% of Journeyperson's rate
Supplemental Rate Per Hour: $35.42

Effective Period: 3/17/2025 - 6/30/2025
Wage Rate Per Hour: 55% of Journeyperson's rate
Supplemental Rate Per Hour: $36.16

Elevator (Constructor) - Third Year

Effective Period: 7/1/2024 - 3/16/2025
Wage Rate Per Hour: 65% of Journeyperson's rate
Supplemental Rate Per Hour: $36.71

Effective Period: 3/17/2025 - 6/30/2025
Wage Rate Per Hour: 65% of Journeyperson's rate
Supplemental Rate Per Hour: $37.53

Elevator (Constructor) - Fourth Year

Effective Period: 7/1/2024 - 3/16/2025
Wage Rate Per Hour: 75% of Journeyperson's rate
Supplemental Rate Per Hour: $38.00

Effective Period: 3/17/2025 - 6/30/2025
Wage Rate Per Hour: 75% of Journeyperson's rate
Supplemental Rate Per Hour: $38.90

(Local #1)

ELEVATOR REPAIR & MAINTENANCE

(Ratio of Apprentice to Journeyperson: 1 to 1, 1 to 2)

Elevator Service/Modernization Mechanic (First Year)

Effective Period: 7/1/2024 - 3/16/2025
Wage Rate Per Hour: 50% of Journeyperson's rate
Supplemental Benefit Per Hour: $34.75

Effective Period: 3/17/2025 - 6/30/2025
Wage Rate Per Hour: 50% of Journeyperson's rate
Supplemental Benefit Per Hour: $35.45

Elevator Service/Modernization Mechanic (Second Year)

Effective Period: 7/1/2024 - 3/16/2025
Wage Rate Per Hour: 55% of Journeyperson's rate
Supplemental Benefit Per Hour: $35.39

Effective Period: 3/17/2025 - 6/30/2025
Wage Rate Per Hour: 55% of Journeyperson's rate
Supplemental Benefit Per Hour: $36.13

Elevator Service/Modernization Mechanic (Third Year)

Effective Period: 7/1/2024 - 3/16/2025
Wage Rate Per Hour: 65% of Journeyperson's rate
Supplemental Benefit Per Hour: $36.68

Effective Period: 3/17/2025 - 6/30/2025
Wage Rate Per Hour: 65% of Journeyperson's rate
Supplemental Benefit Per Hour: $37.50

Elevator Service/Modernization Mechanic (Fourth Year)

Effective Period: 7/1/2024 - 3/16/2025
Wage Rate Per Hour: 75% of Journeyperson's rate
Supplemental Benefit Per Hour: $37.96

Effective Period: 3/17/2025 - 6/30/2025
Wage Rate Per Hour: 75% of Journeyperson's rate
Supplemental Benefit Per Hour: $38.86

(Local #1)

ENGINEER
(Ratio of Apprentice to Journeyperson: 1 to 1, 1 to 5)

Engineer - First Year

Effective Period: 7/1/2024 - 6/30/2025
Wage Rate per Hour: $27.47
Supplemental Benefit Rate per Hour: $34.30

Engineer - Second Year

Effective Period: 7/1/2024 - 6/30/2025
Wage Rate per Hour: $34.34
Supplemental Benefit Rate per Hour: $34.30

Engineer - Third Year

Effective Period: 7/1/2024 - 6/30/2025
Wage Rate per Hour: $37.77
Supplemental Benefit Rate per Hour: $34.30

Engineer - Fourth Year

Effective Period: 7/1/2024 - 6/30/2025
Wage Rate per Hour: $41.21
Supplemental Benefit Rate per Hour: $34.30

(Local #15)

ENGINEER - OPERATING
(Ratio of Apprentice to Journeyperson: 1 to 1, 1 to 5)

Operating Engineer - First Year

Effective Period: 7/1/2024 - 6/30/2025
Wage Rate Per Hour: 40% of Operating Engineer - Road & Heavy Construction V's Rate
Supplemental Benefit Per Hour: $26.40

Operating Engineer - Second Year

Effective Period: 7/1/2024 - 6/30/2025

Wage Rate Per Hour: 50% of Operating Engineer - Road & Heavy Construction V's Rate
Supplemental Benefit Per Hour: $26.40

Operating Engineer - Third Year

Effective Period: 7/1/2024 - 6/30/2025
Wage Rate Per Hour: 60% of Operating Engineer - Road & Heavy Construction V's Rate
Supplemental Benefit Per Hour: $26.40

(Local #14)

FLOOR COVERER
(Ratio of Apprentice to Journeyperson: 1 to 1, 1 to 4)

Floor Coverer (First Year)

Effective Period: 7/1/2024 - 6/30/2025
Wage Rate per Hour: $25.20
Supplemental Benefit Rate per Hour: $17.25

Floor Coverer (Second Year)

Effective Period: 7/1/2024 - 6/30/2025
Wage Rate per Hour: $28.20
Supplemental Benefit Rate per Hour: $18.75

Floor Coverer (Third Year)

Effective Period: 7/1/2024 - 6/30/2025
Wage Rate per Hour: $32.45
Supplemental Benefit Rate per Hour: $22.35

Floor Coverer (Fourth Year)

Effective Period: 7/1/2024 - 6/30/2025
Wage Rate per Hour: $40.33
Supplemental Benefit Rate per Hour: $24.35

(Carpenters District Council)

GLAZIER
(Ratio of Apprentice to Journeyperson: 1 to 1, 1 to 3)

Glazier (First Year)

Effective Period: 7/1/2024 - 6/30/2025
Wage and Supplemental Rate Per Hour: 40% of Journeyperson's rate

Glazier (Second Year)

Effective Period: 7/1/2024 - 6/30/2025
Wage and Supplemental Rate Per Hour: 50% of Journeyperson's rate

Glazier (Third Year)

Effective Period: 7/1/2024 - 6/30/2025
Wage and Supplemental Rate Per Hour: 60% of Journeyperson's rate

Glazier (Fourth Year)

Effective Period: 7/1/2024 - 6/30/2025
Wage and Supplemental Rate Per Hour: 80% of Journeyperson's rate

(Local #1281)

HAZARDOUS MATERIAL HANDLER
(Ratio of Apprentice Journeyperson: 1 to 1, 1 to 3)

Handler (First 1000 Hours)

Effective Period: 7/1/2024 - 6/30/2025
Wage Rate per Hour: $20.00
Supplemental Benefit Rate per Hour: $15.10

Handler (Second 1000 Hours)

Effective Period: 7/1/2024 - 6/30/2025
Wage Rate per Hour: $21.00
Supplemental Benefit Rate per Hour: $15.10

Handler (Third 1000 Hours)

Effective Period: 7/1/2024 - 6/30/2025
Wage Rate per Hour: $24.00
Supplemental Benefit Rate per Hour: $15.10

Handler (Fourth 1000 Hours)

Effective Period: 7/1/2024 - 6/30/2025
Wage Rate per Hour: $26.00
Supplemental Benefit Rate per Hour: $15.10

(Local #78)

HEAT & FROST INSULATOR

(Ratio of Apprentice to Journeyperson: 1 to 1, 1 to 3)

Heat & Frost Insulator (First Year)

Effective Period: 7/1/2024 - 6/30/2025
Wage and Supplemental Rate Per Hour: 40% of Journeyperson's rate

Heat & Frost Insulator (Second Year)

Effective Period: 7/1/2024 - 6/30/2025
Wage and Supplemental Rate Per Hour: 50% of Journeyperson's rate

Heat & Frost Insulator (Third Year)

Effective Period: 7/1/2024 - 6/30/2025
Wage and Supplemental Rate Per Hour: 60% of Journeyperson's rate

Heat & Frost Insulator (Fourth Year)

Effective Period: 7/1/2024 - 6/30/2025
Wage and Supplemental Rate Per Hour: 70% of Journeyperson's rate

(Local #12)

HOUSE WRECKER
(TOTAL DEMOLITION)
(Ratio of Apprentice to Journeyperson: 1 to 1, 1 to 3)

House Wrecker - First Year

Effective Period: 7/1/2024 - 6/30/2025
Wage Rate per Hour: $21.55
Supplemental Benefit Rate per Hour: $11.27

House Wrecker - Second Year

Effective Period: 7/1/2024 - 6/30/2025
Wage Rate per Hour: $23.30
Supplemental Benefit Rate per Hour: $11.27

House Wrecker - Third Year

Effective Period: 7/1/2024 - 6/30/2025
Wage Rate per Hour: $24.80
Supplemental Benefit Rate per Hour: $11.27

House Wrecker - Fourth Year

Effective Period: 7/1/2024 - 6/30/2025
Wage Rate per Hour: $27.30
Supplemental Benefit Rate per Hour: $11.27

(Mason Tenders District Council)

IRON WORKER - ORNAMENTAL
(Ratio of Apprentice to Journeyperson: 1 to 1, 1 to 4)

Iron Worker (Ornamental) - First Year

Effective Period: 7/1/2024 - 6/30/2025
Wage Rate per Hour: $25.98
Supplemental Benefit Rate per Hour: $16.00

Iron Worker (Ornamental) - Second Year

Effective Period: 7/1/2024 - 6/30/2025
Wage Rate per Hour: $28.45
Supplemental Benefit Rate per Hour: $18.00

Iron Worker (Ornamental) - Third Year

Effective Period: 7/1/2024 - 6/30/2025
Wage Rate per Hour: $30.80
Supplemental Benefit Rate per Hour: $19.00

Iron Worker (Ornamental) - Fourth Year

Effective Period: 7/1/2024 - 6/30/2025
Wage Rate per Hour: $34.39
Supplemental Benefit Rate per Hour: $21.00

(Local #580)

IRON WORKER - STRUCTURAL

(Ratio of Apprentice to Journeyperson: 1 to 1, 1 to 6)

Iron Worker (Structural) - 1st Six Months

Effective Period: 7/1/2024 - 6/30/2025
Wage Rate per Hour: $30.23
Supplemental Benefit Rate per Hour: $61.90

Iron Worker (Structural) - 7- 18 Months

Effective Period: 7/1/2024 - 6/30/2025
Wage Rate per Hour: $30.83
Supplemental Benefit Rate per Hour: $61.90

Iron Worker (Structural) - 19 - 36 months

Effective Period: 7/1/2024 - 6/30/2025
Wage Rate per Hour: $31.44
Supplemental Benefit Rate per Hour: $61.90

(Local #40 and #361)

LABORER - HEAVY & HIGHWAY

(Ratio Apprentice to Journeyperson: 1 to 1, 1 to 3)

Laborer (Foundation, Concrete, Excavating, Street Pipe Layer & Common) - First 1000 hours

Effective Period: 7/1/2024 - 6/30/2025
Wage Rate Per Hour: 50% of Journeyperson's rate
Supplemental Rate Per Hour: $54.03

Laborer (Foundation, Concrete, Excavating, Street Pipe Layer & Common) - Second 1000 hours

Effective Period: 7/1/2024 - 6/30/2025
Wage Rate Per Hour: 60% of Journeyperson's rate
Supplemental Rate Per Hour: 54.03

Laborer (Foundation, Concrete, Excavating, Street Pipe Layer & Common) - Third 1000 hours

Effective Period: 7/1/2024 - 6/30/2025
Wage Rate Per Hour: 75% of Journeyperson's rate
Supplemental Rate Per Hour: 54.03

Laborer (Foundation, Concrete, Excavating, Street Pipe Layer & Common) - Fourth 1000 hours

Effective Period: 7/1/2024 - 6/30/2025
Wage Rate Per Hour: 90% of Journeyperson's rate
Supplemental Rate Per Hour: $54.03

(Local #731)

LABORER - PAVER & ROADBUILDER

(Ratio of Apprentice to Journeyperson: 1 to 1, 1 to 3)

Paver and Roadbuilder - First Year (Minimum 1000 hours)

Effective Period: 7/1/2024 - 6/30/2025
Wage Rate per Hour: $31.36
Supplemental Benefit Rate per Hour: $26.67

Paver and Roadbuilder - Second Year (Minimum 1000 hours)

Effective Period: 7/1/2024 - 6/30/2025
Wage Rate per Hour: $33.00
Supplemental Benefit Rate per Hour: $26.67

(Local#1010)

LABORER - PAVER AND ROADBUILDER - LINE STRIPING (ROADWAY)

(Ratio of Apprentice to Journeyperson: 1 to 1, 1 to 3)

Paver and Roadbuilder - Line Striping (Roadway) - First Year (Minimum 1000 hours)

Effective Period: 7/1/2024 - 6/30/2025
Wage Rate per Hour: $31.36
Supplemental Benefit Rate per Hour: $19.27

Paver and Roadbuilder - Line Striping (Roadway) - Second Year (Minimum 1000 hours)

Effective Period: 7/1/2024 - 6/30/2025
Wage Rate per Hour: $33.00
Supplemental Benefit Rate per Hour: $19.27

(Local #1010)

MARBLE MECHANICS

(Ratio of Apprentice to Journeyperson: 1 to 1, 1 to 4)

Cutters & Setters - First 750 Hours

Effective Period: 7/1/2024 - 6/30/2025
Wage and Supplemental Rate Per Hour: 40% of Journeyperson's rate

NO BENEFITS PAID DURING THE FIRST TWO MONTHS (PROBATIONARY PERIOD)

Cutters & Setters - Second 750 Hours

Effective Period: 7/1/2024 - 6/30/2025
Wage and Supplemental Rate Per Hour: 45% of Journeyperson's rate

Cutters & Setters - Third 750 Hours

Effective Period: 7/1/2024 - 6/30/2025
Wage and Supplemental Rate Per Hour: 50% of Journeyperson's rate

Cutters & Setters - Fourth 750 Hours

Effective Period: 7/1/2024 - 6/30/2025
Wage and Supplemental Rate Per Hour: 55% of Journeyperson's rate

Cutters & Setters - Fifth 750 Hours

Effective Period: 7/1/2024 - 6/30/2025
Wage and Supplemental Rate Per Hour: 60% of Journeyperson's rate

Cutters & Setters - Sixth 750 Hours

Effective Period: 7/1/2024 - 6/30/2025
Wage and Supplemental Rate Per Hour: 65% of Journeyperson's rate

Cutters & Setters - Seventh 750 Hours

Effective Period: 7/1/2024 - 6/30/2025
Wage and Supplemental Rate Per Hour: 70% of Journeyperson's rate

Cutters & Setters - Eighth 750 Hours

Effective Period: 7/1/2024 - 6/30/2025
Wage and Supplemental Rate Per Hour: 75% of Journeyperson's rate

Cutters & Setters - Ninth 750 Hours

Effective Period: 7/1/2024 - 6/30/2025
Wage and Supplemental Rate Per Hour: 85% of Journeyperson's rate

Cutters & Setters - Tenth 750 Hours

Effective Period: 7/1/2024 - 6/30/2025

Wage and Supplemental Rate Per Hour: 95% of Journeyperson's rate

Polishers & Finishers - First 900 Hours

Effective Period: 7/1/2024 - 6/30/2025
Wage and Supplemental Rate Per Hour: 70% of Journeyperson's rate

NO BENEFITS PAID DURING THE FIRST TWO MONTHS (PROBATIONARY PERIOD)

Polishers & Finishers - Second 900 Hours

Effective Period: 7/1/2024 - 6/30/2025
Wage and Supplemental Rate Per Hour: 80% of Journeyperson's rate

Polishers & Finishers - Third 900 Hours

Effective Period: 7/1/2024 - 6/30/2025
Wage and Supplemental Rate Per Hour: 90% of Journeyperson's rate

(Local #7)

MASON TENDER
(Ratio of Apprentice to Journeyperson: 1 to 1, 1 to 3)

Mason Tender - First Year

Effective Period: 7/1/2024 - 6/30/2025
Wage Rate per Hour: $22.05
Supplemental Benefit Rate per Hour: $10.77

Mason Tender - Second Year

Effective Period: 7/1/2024 - 6/30/2025
Wage Rate per Hour: $23.80
Supplemental Benefit Rate per Hour: $10.77

Mason Tender - Third Year

Effective Period: 7/1/2024 - 6/30/2025
Wage Rate per Hour: $25.30
Supplemental Benefit Rate per Hour: $10.77

Mason Tender - Fourth Year

Effective Period: 7/1/2024 - 6/30/2025
Wage Rate per Hour: $27.80
Supplemental Benefit Rate per Hour: $10.77

(Local #79)

MASON TENDER (INTERIOR DEMOLITION WORKER)

(Ratio of Apprentice to Journeyperson: 1 to 1, 1 to 3)

Mason Tender (Interior Demolition) - First Year

Effective Period: 7/1/2024 - 6/30/2025
Wage Rate per Hour: $21.30
Supplemental Benefit Rate per Hour: $10.97

Mason Tender (Interior Demolition) - Second Year

Effective Period: 7/1/2024 - 6/30/2025
Wage Rate per Hour: $23.05
Supplemental Benefit Rate per Hour: $10.97

Mason Tender (Interior Demolition) - Third Year

Effective Period: 7/1/2024 - 6/30/2025
Wage Rate per Hour: $24.55
Supplemental Benefit Rate per Hour: $10.97

Mason Tender (Interior Demolition) - Fourth Year

Effective Period: 7/1/2024 - 6/30/2025
Wage Rate per Hour: $27.05
Supplemental Benefit Rate per Hour: $10.97

(Local #79)

METALLIC LATHER

(Ratio of Apprentice to Journeyperson: 1 to 1, 1 to 3)

Metallic Lather (First Year)

Effective Period: 7/1/2024 - 6/30/2025
Wage Rate per Hour: $22.55
Supplemental Benefit Rate per Hour: $17.87

Metallic Lather (Second Year)

Effective Period: 7/1/2024 - 6/30/2025
Wage Rate per Hour: $23.60
Supplemental Benefit Rate per Hour: $16.87

Metallic Lather (Third Year)

Effective Period: 7/1/2024 - 6/30/2025
Wage Rate per Hour: $24.60
Supplemental Benefit Rate per Hour: $15.92

Metallic Lather (Fourth Year)

Effective Period: 7/1/2024 - 6/30/2025
Wage Rate per Hour: $25.65
Supplemental Benefit Rate per Hour: $14.92

(Local #46)

MILLWRIGHT

(Ratio of Apprentice to Journeyperson: 1 to 1, 1 to 4)

Millwright (First Year)

Effective Period: 7/1/2024 - 6/30/2025
Wage Rate per Hour: $32.16
Supplemental Benefit Rate per Hour: $37.78

Millwright (Second Year)

Effective Period: 7/1/2024 - 6/30/2025
Wage Rate per Hour: $37.61
Supplemental Benefit Rate per Hour: $41.48

Millwright (Third Year)

Effective Period: 7/1/2024 - 6/30/2025
Wage Rate per Hour: $43.06
Supplemental Benefit Rate per Hour: $45.83

Millwright (Fourth Year)

Effective Period: 7/1/2024 - 6/30/2025
Wage Rate per Hour: $53.96
Supplemental Benefit Rate per Hour: $52.59

(Local #740)

PAINTER
(Ratio of Apprentice to Journeyperson: 1 to 1, 1 to 3)

Painter - Brush & Roller - First Year

Effective Period: 7/1/2024 - 6/30/2025
Wage Rate per Hour: $17.60
Supplemental Benefit Rate per Hour: $19.09

Painter - Brush & Roller - Second Year

Effective Period: 7/1/2024 - 6/30/2025
Wage Rate per Hour: $22.00
Supplemental Benefit Rate per Hour: $24.46

Painter - Brush & Roller - Third Year

Effective Period: 7/1/2024 - 6/30/2025
Wage Rate per Hour: $26.40
Supplemental Benefit Rate per Hour: $28.80

Painter - Brush & Roller - Fourth Year

Effective Period: 7/1/2024 - 6/30/2025

Wage Rate per Hour: $35.20
Supplemental Benefit Rate per Hour: $37.24

(District Council of Painters)

PAINTER - BRIDGE & STRUCTURAL STEEL
(Ratio of Apprentice to Journeyperson: 1 to 1, 1 to 3)

Painter - Bridge & Structural Steel (First Year)

Effective Period: 7/1/2024 - 6/30/2025
Wage and Supplemental Rate Per Hour: 40% of Journeyperson's rate

Painter - Bridge & Structural Steel (Second Year)

Effective Period: 7/1/2024 - 6/30/2025
Wage and Supplemental Rate Per Hour: 60% of Journeyperson's rate

Painter - Bridge & Structural Steel (Third Year)

Effective Period: 7/1/2024 - 6/30/2025
Wage and Supplemental Rate Per Hour: 80% of Journeyperson's rate

(Local #806)

PAINTER - METAL POLISHER
(Ratio of Apprentice to Journeyperson: 1 to 1, 1 to 3)

Metal Polisher (First Year)

Effective Period: 7/1/2024 - 6/30/2025
Wage Rate per Hour: $19.67
Supplemental Benefit Rate per Hour: $8.66
New Construction - Wage Rate Per Hour: $20.06
Scaffold Over 34 Feet - Wage Rate Per Hour: $22.17

Metal Polisher (Second Year)

Effective Period: 7/1/2024 - 6/30/2025
Wage Rate per Hour: $21.63
Supplemental Benefit Rate per Hour: $8.66
New Construction - Wage Rate Per Hour: $22.07
Scaffold Over 34 Feet - Wage Rate Per Hour: $24.13

Metal Polisher (Third Year)

Effective Period: 7/1/2024 - 6/30/2025
Wage Rate per Hour: $23.60
Supplemental Benefit Rate per Hour: $8.66
New Construction - Wage Rate Per Hour: $24.14
Scaffold Over 34 Feet - Wage Rate Per Hour: $26.10

(Local 8A-28)

PLASTERER

(Ratio of Apprentice to Journeyperson: 1 to 1, 1 to 3)
(Each Term is 800 Hours.)

Plasterer - First Term

Effective Period: 7/1/2024 - 6/30/2025
Wage Rate Per Hour: 55% of Journeyperson's rate
Supplemental Rate Per Hour: $17.48

Plasterer - Second Term

Effective Period: 7/1/2024 - 6/30/2025
Wage Rate Per Hour: 60% of Journeyperson's rate
Supplemental Rate Per Hour: $18.63

Plasterer - Third Term

Effective Period: 7/1/2024 - 6/30/2025
Wage Rate Per Hour: 70% of Journeyperson's rate
Supplemental Rate Per Hour: $20.93

Plasterer - Fourth Term

Effective Period: 7/1/2024 - 6/30/2025
Wage Rate Per Hour: 75% of Journeyperson's rate
Supplemental Rate Per Hour: $22.10

(Local #262)

PLASTERER - TENDER

(Ratio of Apprentice to Journeyperson: 1 to 1, 1 to 3)

Plasterer Tender - First Year

Effective Period: 7/1/2024 - 6/30/2025
Wage Rate per Hour: $21.55
Supplemental Benefit Rate per Hour: $11.27

Plasterer Tender - Second Year

Effective Period: 7/1/2024 - 6/30/2025
Wage Rate per Hour: $23.30
Supplemental Benefit Rate per Hour: $11.27

Plasterer Tender - Third Year

Effective Period: 7/1/2024 - 6/30/2025
Wage Rate per Hour: $24.80
Supplemental Benefit Rate per Hour: $11.27

Plasterer Tender - Fourth Year

Effective Period: 7/1/2024 - 6/30/2025
Wage Rate per Hour: $27.30
Supplemental Benefit Rate per Hour: $11.27

(Local #79)

PLUMBER

(Ratio of Apprentice to Journeyperson: 1 to 1, 1 to 3)

Plumber - First Year: 1st Six Months

Effective Period: 7/1/2024 - 6/30/2025
Wage Rate per Hour: $19.00
Supplemental Benefit Rate per Hour: $5.43

Plumber - First Year: 2nd Six Months

Effective Period: 7/1/2024 - 6/30/2025
Wage Rate per Hour: $21.00
Supplemental Benefit Rate per Hour: $6.43

Plumber - Second Year

Effective Period: 7/1/2024 - 6/30/2025
Wage Rate per Hour: $30.22
Supplemental Benefit Rate per Hour: $22.73

Plumber - Third Year

Effective Period: 7/1/2024 - 6/30/2025
Wage Rate per Hour: $32.32
Supplemental Benefit Rate per Hour: $22.73

Plumber - Fourth Year

Effective Period: 7/1/2024 - 6/30/2025
Wage Rate per Hour: $35.17
Supplemental Benefit Rate per Hour: $22.73

Plumber - Fifth Year: 1st Six Months

Effective Period: 7/1/2024 - 6/30/2025
Wage Rate per Hour: $36.57
Supplemental Benefit Rate per Hour: $22.73

Plumber - Fifth Year: 2nd Six Months

Effective Period: 7/1/2024 - 6/30/2025
Wage Rate per Hour: $48.64
Supplemental Benefit Rate per Hour: $22.73

(Plumbers Local #1)

POINTER, WATERPROOFER, CAULKER, SANDBLASTER, STEAMBLASTER

(Exterior Building Renovation)
(Ratio of Apprentice to Journeyperson: 1 to 1, 1 to 4)

Pointer, Waterproofer, Caulker, Sandblaster, Steamblaster - First Year

Effective Period: 7/1/2024 - 6/30/2025
Wage Rate per Hour: $32.76
Supplemental Benefit Rate per Hour: $15.10

Pointer, Waterproofer, Caulker, Sandblaster, Steamblaster - Second Year

Effective Period: 7/1/2024 - 6/30/2025
Wage Rate per Hour: $37.09
Supplemental Benefit Rate per Hour: $20.30

Pointer, Waterproofer, Caulker, Sandblaster, Steamblaster - Third Year

Effective Period: 7/1/2024 - 6/30/2025
Wage Rate per Hour: $42.97
Supplemental Benefit Rate per Hour: $24.05

Pointer, Waterproofer, Caulker, Sandblaster, Steamblaster - Fourth Year

Effective Period: 7/1/2024 - 6/30/2025
Wage Rate per Hour: $51.60
Supplemental Benefit Rate per Hour: $25.05

(Bricklayer District Council)

ROOFER

(Ratio of Apprentice to Journeyperson: 1 to 1, 1 to 2)

Roofer - First Year

Effective Period: 7/1/2024 - 6/30/2025
Wage Rate Per Hour: 38% of Journeyperson's rate
Supplemental Benefit Rate Per Hour: $7.67

Roofer - Second Year

Effective Period: 7/1/2024 - 6/30/2025
Wage Rate Per Hour: 45% of Journeyperson's rate
Supplemental Benefit Rate Per Hour: $17.69

Roofer - Third Year

Effective Period: 7/1/2024 - 6/30/2025
Wage Rate Per Hour: 50% of Journeyperson's rate
Supplemental Benefit Rate Per Hour: $19.61

Roofer - Fourth Year

Effective Period: 7/1/2024 - 6/30/2025
Wage Rate Per Hour: 60% of Journeyperson's rate
Supplemental Benefit Rate Per Hour: $23.45

Roofer - Fifth Year

Effective Period: 7/1/2024 - 6/30/2025
Wage Rate Per Hour: 75% of Journeyperson's rate
Supplemental Benefit Rate Per Hour: $29.22

(Local #8)

SHEET METAL WORKER

(Ratio of Apprentice to Journeyperson: 1 to 1, 1 to 3)

Sheet Metal Worker (0-6 Months)

Effective Period: 7/1/2024 - 6/30/2025
Wage Rate Per Hour: 25% of Journeyperson's rate
Supplemental Rate Per Hour: $7.64

Sheet Metal Worker (7-18 Months)

Effective Period: 7/1/2024 - 6/30/2025
Wage Rate Per Hour: 35% of Journeyperson's rate
Supplemental Rate Per Hour: $21.49

Sheet Metal Worker (19-30 Months)

Effective Period: 7/1/2024 - 6/30/2025

Wage Rate Per Hour: 45% of Journeyperson's rate
Supplemental Rate Per Hour: $29.09

Sheet Metal Worker (31-36 Months)

Effective Period: 7/1/2024 - 6/30/2025
Wage Rate Per Hour: 55% of Journeyperson's rate
Supplemental Rate Per Hour: $34.41

Sheet Metal Worker (37-42 Months)

Effective Period: 7/1/2024 - 6/30/2025
Wage Rate Per Hour: 55% of Journeyperson's rate
Supplemental Rate Per Hour: $34.41

Sheet Metal Worker (43-48 Months)

Effective Period: 7/1/2024 - 6/30/2025
Wage Rate Per Hour: 70% of Journeyperson's rate
Supplemental Rate Per Hour: $42.42

Sheet Metal Worker (49-54 Months)

Effective Period: 7/1/2024 - 6/30/2025
Wage Rate Per Hour: 70% of Journeyperson's rate
Supplemental Rate Per Hour: $42.42

Sheet Metal Worker (55-60 Months)

Effective Period: 7/1/2024 - 6/30/2025
Wage Rate Per Hour: 80% of Journeyperson's rate
Supplemental Rate Per Hour: $47.76

(Local #28)

SIGN ERECTOR

(Ratio of Apprentice to Journeyperson: 1 to 1, 1 to 4)

Sign Erector - First Year: 1st Six Months

Effective Period: 7/1/2024 - 6/30/2025
Wage Rate Per Hour: 35% of Journeyperson's rate
Supplemental Rate Per Hour: $17.84

Sign Erector - First Year: 2nd Six Months

Effective Period: 7/1/2024 - 6/30/2025
Wage Rate Per Hour: 40% of Journeyperson's rate
Supplemental Rate Per Hour: $20.25

Sign Erector - Second Year: 1st Six Months

Effective Period: 7/1/2024 - 6/30/2025
Wage Rate Per Hour: 45% of Journeyperson's rate
Supplemental Rate Per Hour: $22.66

Sign Erector - Second Year: 2nd Six Months

Effective Period: 7/1/2024 - 6/30/2025
Wage Rate Per Hour: 50% of Journeyperson's rate
Supplemental Rate Per Hour: $25.09

Sign Erector - Third Year: 1st Six Months

Effective Period: 7/1/2024 - 6/30/2025
Wage Rate Per Hour: 55% of Journeyperson's rate
Supplemental Rate Per Hour: $33.83

Sign Erector - Third Year: 2nd Six Months

Effective Period: 7/1/2024 - 6/30/2025
Wage Rate Per Hour: 60% of Journeyperson's rate
Supplemental Rate Per Hour: $36.81

Sign Erector - Fourth Year: 1st Six Months

Effective Period: 7/1/2024 - 6/30/2025
Wage Rate Per Hour: 65% of Journeyperson's rate
Supplemental Rate Per Hour: $40.63

Sign Erector - Fourth Year: 2nd Six Months

Effective Period: 7/1/2024 - 6/30/2025
Wage Rate Per Hour: 70% of Journeyperson's rate
Supplemental Rate Per Hour: $43.70

Sign Erector - Fifth Year

Effective Period: 7/1/2024 - 6/30/2025
Wage Rate Per Hour: 75% of Journeyperson's rate
Supplemental Rate Per Hour: $46.76

Sign Erector - Sixth Year

Effective Period: 7/1/2024 - 6/30/2025

Wage Rate Per Hour: 80% of Journeyperson's rate
Supplemental Rate Per Hour: $49.80

(Local #137)

STEAMFITTER
(Ratio of Apprentice to Journeyperson: 1 to 1, 1 to 3)

Steamfitter - First Year

Effective Period: 7/1/2024 - 6/30/2025
Wage Rate and Supplemental Per Hour: 40% of Journeyperson's rate

Steamfitter - Second Year

Effective Period: 7/1/2024 - 6/30/2025
Wage Rate and Supplemental Rate Per Hour: 50% of Journeyperson's rate.

Steamfitter - Third Year

Effective Period: 7/1/2024 - 6/30/2025
Wage Rate and Supplemental Rate per Hour: 60% of Journeyperson's rate.

Steamfitter - Fourth Year

Effective Period: 7/1/2024 - 6/30/2025
Wage Rate and Supplemental Rate Per Hour: 70% of Journeyperson's rate.

Steamfitter - Fifth Year

Effective Period: 7/1/2024 - 6/30/2025
Wage Rate and Supplemental Rate Per Hour: 80% of Journeyperson's rate.

(Local #638)

STEAMFITTER - REFRIGERATION & AIR CONDITIONER
(Ratio of Apprentice to Journeyperson: 1 to 1, 1 to 3)

Refrigeration & Air Conditioner (First Year)

Effective Period: 7/1/2024 - 6/30/2025
Wage Rate per Hour: $22.31
Supplemental Benefit Rate per Hour: $14.47

Refrigeration & Air Conditioner (Second Year)

Effective Period: 7/1/2024 - 6/30/2025
Wage Rate per Hour: $26.94
Supplemental Benefit Rate per Hour: $15.91

Refrigeration & Air Conditioner (Third Year)

Effective Period: 7/1/2024 - 6/30/2025
Wage Rate per Hour: $31.38
Supplemental Benefit Rate per Hour: $17.41

Refrigeration & Air Conditioner (Fourth Year)

Effective Period: 7/1/2024 - 6/30/2025
Wage Rate per Hour: $37.90
Supplemental Benefit Rate per Hour: $19.44

(Local #638-B)

STONE MASON - SETTER
(Ratio Apprentice of Journeyperson: 1 to 1, 1 to 2)

Stone Mason - Setters - First 750 Hours

Effective Period: 7/1/2024 - 6/30/2025
Wage and Supplemental Rate Per Hour: 50% of Journeyperson's rate

Stone Mason - Setters - Second 750 Hours

Effective Period: 7/1/2024 - 6/30/2025
Wage Rate Per Hour: 60% of Journeyperson's rate
Supplemental Rate Per Hour: 50% of Journeyperson's rate

Stone Mason - Setters - Third 750 Hours

Effective Period: 7/1/2024 - 6/30/2025

Wage Rate Per Hour: 70% of Journeyperson's rate
Supplemental Rate Per Hour: 50% of Journeyperson's rate

Stone Mason - Setters - Fourth 750 Hours

Effective Period: 7/1/2024 - 6/30/2025
Wage Rate Per Hour: 80% of Journeyperson's rate
Supplemental Rate Per Hour: 50% of Journeyperson's rate

Stone Mason - Setters - Fifth 750 Hours

Effective Period: 7/1/2024 - 6/30/2025
Wage Rate Per Hour: 90% of Journeyperson's rate
Supplemental Rate Per Hour: 50% of Journeyperson's rate

Stone Mason - Setters - Sixth 750 Hours

Effective Period: 7/1/2024 - 6/30/2025
Wage Rate Per Hour: 100% of Journeyperson's rate
Supplemental Rate Per Hour: 50% of Journeyperson's rate

(Bricklayers District Council)

TAPER

(Ratio of Apprentice to Journeyperson: 1 to 1, 1 to 4)

Drywall Taper - First Year

Effective Period: 7/1/2024 - 6/30/2025
Wage Rate per Hour: $21.75
Supplemental Benefit Rate per Hour: $15.00

Drywall Taper - Second Year

Effective Period: 7/1/2024 - 6/30/2025
Wage Rate per Hour: $24.24
Supplemental Benefit Rate per Hour: $24.71

Drywall Taper - Third Year

Effective Period: 7/1/2024 - 6/30/2025
Wage Rate per Hour: $29.08
Supplemental Benefit Rate per Hour: $26.67

Drywall Taper - Fourth Year

Effective Period: 7/1/2024 - 6/30/2025
Wage Rate per Hour: $38.78
Supplemental Benefit Rate per Hour: $30.59

(Local #1974)

TILE LAYER - SETTER
(Ratio of Apprentice to Journeyperson: 1 to 1, 1 to 4)

Tile Layer - Setter - First 750 Hours

Effective Period: 7/1/2024 - 6/30/2025
Wage and Supplemental Rate Per Hour:35% of Journeyperson's rate

Tile Layer - Setter - Second 750 Hours

Effective Period: 7/1/2024 - 6/30/2025
Wage and Supplemental Rate Per Hour 40% of Journeyperson's rate

Tile Layer - Setter - Third 750 Hours

Effective Period: 7/1/2024 - 6/30/2025
Wage and Supplemental Rate Per Hour: 50% of Journeyperson's rate

Tile Layer - Setter - Fourth 750 Hours

Effective Period: 7/1/2024 - 6/30/2025
Wage and Supplemental Rate Per Hour: 55% of Journeyperson's rate

Tile Layer - Setter - Fifth 750 Hours

Effective Period: 7/1/2024 - 6/30/2025
Wage and Supplemental Rate Per Hour: 60% of Journeyperson's rate

Tile Layer - Setter - Sixth 750 Hours

Effective Period: 7/1/2024 - 6/30/2025
Wage and Supplemental Rate Per Hour: 65% of Journeyperson's rate

Tile Layer - Setter - Seventh 750 Hours

Effective Period: 7/1/2024 - 6/30/2025
Wage and Supplemental Rate Per Hour: 70% of Journeyperson's rate

Tile Layer - Setter - Eighth 750 Hours

Effective Period: 7/1/2024 - 6/30/2025
Wage and Supplemental Rate Per Hour: 75% of Journeyperson's rate

Tile Layer - Setter - Ninth 750 Hours

Effective Period: 7/1/2024 - 6/30/2025
Wage and Supplemental Rate Per Hour:80% of Journeyperson's rate

Tile Layer - Setter - Tenth 750 Hours

Effective Period: 7/1/2024 - 6/30/2025
Wage and Supplemental Rate Per Hour: 90% of Journeyperson's rate

(Local #7)

TIMBERPERSON

(Ratio of Apprentice to Journeyperson: 1 to 1, 1 to 6)

Timberperson - First Year

Effective Period: 7/1/2024 - 6/30/2025
Wage Rate Per Hour: $24.96
Supplemental Rate Per Hour: $37.69

Timberperson - Second Year

Effective Period: 7/1/2024 - 6/30/2025
Wage Rate Per Hour: $30.07
Supplemental Rate Per Hour: $37.69

Timberperson - Third Year

Effective Period: 7/1/2024 - 6/30/2025
Wage Rate Per Hour: $37.72
Supplemental Rate Per Hour: $37.69

Timberperson - Fourth Year

Effective Period: 7/1/2024 - 6/30/2025

Wage Rate Per Hour: $45.38
Supplemental Rate Per Hour: $37.69

(Local #1536)

Leonard A. Mancusi
SENIOR ASSISTANT COMPTROLLER

THE CITY OF NEW YORK
OFFICE OF THE COMPTROLLER
1 CENTRE STREET ROOM 1120
NEW YORK, N.Y. 10007-2341

TELEPHONE: (212) 669-3622
FAX NUMBER: (212) 669-8499

ALAN G. HEVESI
COMPTROLLER

MEMORANDUM

November 6, 2000

To *Agency Chief Contracting Officers*

From: *Leonard A. Mancusi*

Re: *Security at Construction Sites*

Prior to the enactment of Administrative Code §6-109, security guards on construction sites were not subject to prevailing wages. Security guards under the New York State labor law are covered under §230 which provides that prevailing wages are to be paid for security guards in existing buildings. §6-109 of the Administrative Code which was enacted in 1996 closed this loophole by including all security guards working pursuant to a city contract as a prevailing wage trade.

Although some construction contract boilerplate language has been amended to include §6-109, sub-contractors performing security services have advised us that they were not aware of this provision and, since traditionally, security guards were not a covered trade on construction sites, and they were not advised by a prime contractor that they would have to pay prevailing wages, they have not been doing so.

To avoid the possibility of issuing stop payments against prime contractors for the failure of their security service sub-contractors to pay

prevailing wages, we suggest that you write to all your existing security guard sub-contractors and their primes and in the future, upon approval of a security guard sub-contractor, advise the contractors of their obligation to pay prevailing wages under §6-109 of the Administrative Code.

As always, your cooperation is appreciated.

LAM:er
ACCO.SECURITY AT SITES

THE CITY OF NEW YORK
OFFICE OF THE COMPTROLLER
BUREAU OF LABOR LAW
1 CENTRE STREET
NEW YORK, NY 10007

BRAD LANDER
COMPTROLLER

COMPTROLLER'S PREVAILING WAGE MEMORANDUM REGARDING FLAG PERSONS

June 1, 2024

This memorandum supersedes and replaces the Comptroller's Prevailing Wage Memoranda dated May 21, 1998 and related clarification dated March 13, 2001 concerning Flag Persons. This memorandum sets forth the superseding determination of the New York City Comptroller concerning the applicability of Article 8, Section 220 of the New York Labor Law (the "Labor Law") to individuals who perform traffic control duty or "flagger" tasks in connection with public works construction projects within the jurisdiction of the City of New York. The guidance set forth herein is effective July 1, 2024 and applies only to public works contracts and subcontracts solicited on or after such date.

For purposes of this memorandum, "traffic control duty" means tasks necessary or appropriate to alleviate congestion by directing the flow of pedestrian and/or vehicular traffic away from the vicinity of the construction site using a sign or flag. Workers performing traffic control duty in connection with a public works construction project, whether or not such workers are on, adjacent to, or in close proximity to the construction site, are performing the work of a construction "laborer," as directing traffic away from the job site serves to protect the public and safeguard the work crew. Such workers are thus subject to the prevailing wage requirements of Article 8, Section 220 of the Labor Law as "laborers, workmen, or mechanics." Accordingly, the Prevailing Rate of Wages and Supplements applies to such individuals.

Additionally, workers who perform "flagger" tasks relating to the protection of the public and/or work crew, including but not limited to erecting traffic cones, setting up construction site barriers, and directing the movement of trucks or construction equipment in, on, and off the site, also are subject to the requirements of Article 8, Section 220 of the Labor Law and the Prevailing Rate of Wages and Supplements.

This position is consistent with the New York State Department of Labor's position under Article 8 of the New York Labor Law and the U.S. Department of Labor's position under the Davis-Bacon Act and will promote and streamline compliance with prevailing wage requirements on the various public works construction projects within New York City.

If the trade performing the underlying work performs its own flagging or traffic control, e.g., bridge painters, the flagger or traffic control worker shall receive the same wages as the underlying trade. In the absence of an underlying trade, the flagger or traffic control worker shall receive the wages as set forth in the "Flagger" section of the New York City Comptroller's Construction Worker Prevailing Wage Schedule.

Contractors, agencies, and members of the public are encouraged to contact the Bureau of Labor Law to seek clarification regarding specific instances to ensure compliance with prevailing wage regulations and this memorandum.

Department of Design and Construction

D□□S□□ □□ □□R□S□R□□□□R□
□□R□□□ □□D□S□□□

□□□□M□ □□□□

□R□□□□□D□□□□S□R□□

R□□□□S□R□□□□□ □□ □□S□□□□ S□□ □RS□S□□□□□ □S□□□D

□□□e□er □ □□□ □□□□ □r□ □□□de□a□□□ere□□
□□R□□□□ □□S□□□□□ □S□□□D
□□□□ □□ □□□ □□R□

_____
Contractor

_____

Dated_____, **20**___

_____

APPROVED AS TO FORM
CERTIFIED AS TO LEGAL AUTHORITY

_____
Acting Corporation Counsel

_____

Dated_____, **20**___

_____

Department of Design and Construction

□□□ □□□□ □□ □□□□ □□R□

D□□□R□M□□□ □□D□S□□ □□D □□□S□R□□□□□

D□□S□□ □□ □□□R□S□R□□□□R□

30-30 THOMSON AVENUE
LONG ISLAND CITY, NY, 11101
TEL: 718.391.1000
WEB: www.nyc.gov/ddc

TO BE FILLED IN BY THE BIDDER:

BIDDER'S NAME:

_____

_____

BID SECURITY (CIRCLE ONE):

BID BOND / CERTIFIED CHECK

NUMBER OF ADDENDUMS RECEIVED AND ATTACHED TO BID:

_____ ADDENDUMS

DDC CLIENT AGENCY:

□□□ **D□□□R□M□□□ □□ □□□R□□M□□□□□ □R□□□□□□□□**

PREPARED BY:

□□□□□**S□ D□S□□**

DATE PREPARED:

□□□□□□□□□

□□ □□M□ □ □ □ □

FOR FURNISHING ALL LABOR AND MATERIALS NECESSARY AND REQUIRED FOR:

□R□ □□□□ □D□□□□S□R□□

S□□□D□□□ □
S□□□□□□□□□□□S □□D
R□□□S□□□S □□ S□□□D□RD
S□□□□□□□□□□□S

R□□□□S□R□□□□□□ □□ □□□S□□□□ S□□ □RS□
S□□□□□ □S□□□D

TOGETHER WITH ALL WORK INCIDENTAL THERETO

□□R□□□□ □□S□□□□□ □S□□□D

□□□□ □□ □□□ □□R□

VOLUME 3 OF 3

TABLE OF CONTENTS

SECTION	DESCRIPTION
	SPECIFICATIONS AND STANDARDS OF NEW YORK CITY
SCHEDULE A	GENERAL CONDITIONS TO CONSTRUCTION CONTRACT
R – PAGES	REVISIONS TO STANDARD SPECIFICATIONS
S- PAGES	SPECIAL PROVISIONS
SW – PAGES	SEWER AND WATER MAIN REVISIONS TO SPECIFICATIONS
EP7 – PAGES	GAS COST SHARING (EP7) STANDARD SPECIFICATION
U – PAGES	SECTION U

(NO TEXT ON THIS PAGE)

SPECIFICATIONS AND STANDARDS OF NEW YORK CITY

The following specifications and standards are incorporated into the Contract Documents by reference as though fully set forth herein.

1. Standard Specifications and Drawings for New York City Department of Transportation (NYCDOT) are available:
   Online at: http://www1.nyc.gov/site/ddc/resources/publications.page
   a. NYC DOT Standard Highway Specifications
   b. NYC DOT Standard Details of Construction
   Online at: https://www1.nyc.gov/html/dot/html/about/dotlibrary.shtml#spec
   c. NYC DOT Division of Street Lighting Standard Drawings
   Online at: https://www1.nyc.gov/html/dot/downloads/pdf/nycdot-street-lighting-standard-drawings.pdf
   d. NYC DOT Standard Specifications for Traffic Signals
   e. NYC DOT Standard Drawings for Traffic Signals
   For purchase between 9:00 A.M. and 3:00 P.M. Bid Window, at 55 Water St., Ground Floor, NYC, N.Y. 10041. Tel. (212) 839-9435.
   f. NYC DOT Division of Street Lighting Specifications

2. The 2010 Americans with Disabilities Act (ADA) Standards; available online at: https://www.ada.gov/regs2010/2010ADAStandards/2010ADAstandards.htm

3. The 2013 Public Rights-of-Way Accessibility Guidelines (PROWAG); available online at: https://www.access-board.gov/files/prowag/PROW-SUP-SNPRM-2013.pdf

4. Standard Specifications and Drawings for New York City Department of Environmental Protection (NYCDEP) are available online at: http://www1.nyc.gov/site/ddc/resources/publications.page
   a. NYC DEP Standard Sewer and Water Main Specifications, August 8, 2022
   b. NYC DEP Instructions to Architect/Engineers Specifications for Concrete, January 1992
   c. NYC DEP General Specification 11-Concrete, November 1991
   d. NYC DEP Sewer Design Standards, March 27, 2023
   e. NYC DEP Water Main Standard Drawings, September 19, 2024
   f. Specifications for Trunk Main Work, July 2014
   g. Standard Green Infrastructure Specifications August 1, 2024

5. Standard Design and Guidelines for Green Infrastructure Practices, latest version, available only online at: https://www1.nyc.gov/assets/dep/downloads/pdf/water/stormwater/green-infrastructure/green-infrastructure-standard-designs.pdf

6. Standard Specifications and Drawings for New York City Fire Department Communications facilities of New York City are available online at https://www1.nyc.gov/assets/fdny/downloads/pdf/about/fdny-plant-operations-standard-drawings-specifications.pdf or for pick up from the FDNY Facilities Management Bureau, Plant Operations Engineering, 316 Sgt. Beers Avenue Cluster 1 Box 16, Fort Totten, N.Y. 11359. Contact: Mr. Ed Durkin, Tel. (718) 281-3933

7. Tree Planting Standards of the City of New York Parks & Recreation are available at the following Department of Parks & Recreation website: http://www.nycgovparks.org/pagefiles/53/Tree-Planting-Standards.pdf

8. Standards and Specifications for Utility Joint Bid work are available online at http://www1.nyc.gov/site/ddc/resources/publications.page
   a. CET SPECIFICATIONS AND SKETCHES, dated November 2010
   b. JOINT-BIDDING SPECIFICATIONS AND SKETCHES FOR MANHATTAN, Issued August 1, 2005

S□□□D□□□ □

□□□□R□□ □□□D□□□□S □□ □□□□S□R□□□□□□ □□□□R□□□
□□□□D□□□ □□□□R□□ □□□D□□□□S R□□□□□D □□ □R□□□□□ □□– □□S□R□□□□□
□□R□ □□R□□□□R□D □□□□RM□□□□□

□□□□RM□□□□□ □□R □□DD□RS S□□□□□□ □□ □□D S□□□R□□□ The □□□□ra□□□r shall obtain a bid security in the amount indicated to the right.	Required provided the TOTAL BID PRICE set forth on the Bid Form is $1,000,000. or more. Certified Check: 2% of Bid Amount or Bond: 10% of Bid Amount
□□□□RM□□□□□ □□R □□DD□RS S□□□□□□ □□ □□R□□RM□□□□ □□D □□□M□□□ □□□DS The □□□□ra□□□r shall obtain performance and payment bonds in the amount indicated to the right.	Required for contracts in the amount of $1,000,000 or more. Performance Security and Payment Security shall each be in an amount equal to 100% of the Contract Price
□□□□RM□□□□□ □□R □□DD□RS D□□□R□M□□□ □□D□S□□□ □□D □□□S□R□□□□□□ S□□□□□ R□□□□R□M□□□S The □□□□ra□□□r shall provide the safety personnel as indicated to the right.	■ Project Safety Representative ☐ Dedicated, full-time Project Safety Manager
□□□□R□□□ □R□□□□ □□ D□□□ □□R S□□S□□□□□□□ □□M□□□□□□□ The □□□□ra□□□r shall substantially complete the □ □r□ in the number of calendar days indicated to the right.	See Page SA-4 and as stated in the Work Orders
□□□□R□□□ □R□□□□ □□ □□□□D□□□D D□M□□□S If the □□□□ra□□□r fails to substantially complete the □ □r□ within the time fixed for substantial completion plus authorized time extensions or if the □□□□ra□□□r, in the sole determination of the □□□ □ □ss□□□er, has abandoned the □ □r□, the □□□□ra□□□r shall pay to the □□□ the amount indicated to the right.	See Section C. (1) in the SEWER AND WATER MAIN REVISIONS TO SPECIFICATIONS (SW-PAGES) page SW-11 in volume 3 of 3 of this contract.
□□□□R□□□ □R□□□□ □□ □□□ S□□□□□□□R□□□□R The □□□□ra□□□r shall not make subcontracts totaling an amount more than the percentage of the total □□□□ra□□price indicated to the right.	Not to exceed 35% of the □□□□ra□□ price

□□□□R□□□ □R□□□□ □□□ R□□□□□□□ The □□□ □ □ss□□□er shall deduct and retain until the substantial completion of the □ □r□ the percent value of the □ □r□ indicated to the right.	5 % of the value of the □ □r□
□□□□R□□□ □R□□□□ □□□ □□er D□re□□□□s □e□□□	See pages SA-5 through SA-12
□□□□R□□□ □R□□□□ □□□ D□□□S□□ □□□R□□□□□ As security for the faithful performance of its obligations, the □□□□ra□□□r, upon filing its requisition for payment on S□□s□a□□a□ □□□ □□e□□□□, shall deposit with the □□□ □ □ss□□□er a sum equal to the percentage of the □□□□ra□□ price indicated to the right.	1% of □□□□ra□□price
□□□□R□□□ □R□□□□ □□□ □□R□□D □□□□□R□□□□□ Periods of maintenance and guarantee other than the period set forth in Article 24.1 are indicated to the right.	Eighteen (18) Months, excluding Trees and Plants Twenty-four (24) Months for Trees and Plants
□□□□R□□□ □R□□□□ □□□ □□M□□□S□□□□ □ □□ □□ □□□D □□ □□□□R□□□□R The □□□□ shall pay and the □□□□ra□□□r shall accept in full consideration for the performance of the □□□□ra□□, subject to additions and deductions as provided herein□the total sum s□□□ □ □□ □□e □□□□□ □ □□ □□e r□□□□being the amount at which the □□□□ra□□was awarded to the □□□□ra□□□r at a public letting thereof, based upon the □□□□ra□□□r□s bid for the □□□□ra□□□	Amount for which the □□□□ra□□was Awarded: _____ _____ Dollars ($_____)
□□□□R□□□ □R□□□□ □□□ □□R□□□□□□□□□ □ □□ M□□□R□□□□□□ □ □□D □□D □ □M□□□□ □ □□D □□S□□□SS □□□□R□R□S□S □□ □□□□ □R□□□R□M□□□	See M/WBE Utilization Plan in the PASSPort Procurement M/WBE Considerations Section.

S□□□D□RD □□□□□ □□ S□□□□□□□□□□□□S S□□□□□□□ □ □□□□□ LIQUIDATED DAMAGES FOR ENGINEER'S FIELD □ □□□□□□□ If the Contractor fails to satisfactorily provide the field office and all equipment specified in **Se□□□□□ □□□□□ □□□□□□eer's □□e□d □ □□□□e**, and/or if a cited deficiency exceed seventy two (72) hours after notice from the Engineer in writing, or is permitted to recur, liquidated damages will be assessed in the amount specified herein for each subsequent calendar day or part thereof that a cited deficiency resulting in nonpayment, as described in **Se□□□□□ □□□□□□**, is not corrected.	N/A
S□□□D□RD □□□□□ □□ S□□□□□□□□□□□□S S□□□□□□□ □ □□□□□ □□□□D□□□D D□M□□□S □□R M□□□□□□□□□□ □□D □R□ □□□□□□□□ □ □□ □R□□□□□	$ 400.00 for each instance of failure to comply with the Maintenance and Protection of Traffic requirements within three (3) hours after written notice from the Engineer. $ 800.00 for each and every hour of failing to open the entire width of roadway to traffic the morning following a night/weekend work operation.
S□□□D□RD □□□□□ □□ S□□□□□□□□□□□□S S□□□□□□□ □ □□□□□ □□□□D□□□D D□M□□□S □□R M□□□□□□□□□□ □□S□□□ If the Contractor fails to comply, within three (3) consecutive hours after written notice from the Engineer, with the requirements of **Se□□□□□ □□□□□ □ Ma□□□e□a□□e □□S□□e**, the Contractor shall pay to the City of New York, until such notice has been complied with or rescinded, the sum specified above per calendar day, for each instance of such failure, as liquidated damages and not as a penalty, for such default.	$ 800.00 for each calendar day, for each occurrence

Da□e □□r S□□s□a□□a□□ □□ □e□□□□ □Re□ere□□e□□r□□□e □□□

The Contractor shall substantially complete the Work within the Final Contract Duration determined in accordance with the terms and conditions set forth herein.

The Base Contract Duration for this project is _____365_____consecutive calendar days (“ccds”).

The Final Contract Duration shall be the Base Contract Duration when a check mark is indicated before the word “NO”, below, and shall be the Base Contract Duration adjusted by the table set forth below when a check mark is indicated before the word “YES”, below.

_____ YES ____√____ NO

When the Final Contract Duration is indicated above to be adjusted by the table below, the table may increase the Base Contract Duration depending on the date of scheduled substantial completion to avoid a scheduled substantial completion of the Work during the winter months. The date of scheduled substantial completion shall be determined by adding the Base Contract Duration to the date specified to commence work in the written Notice to Proceed. The Final Contract Duration shall then be determined as follows:

(a) Find the row that corresponds to the month of substantial completion based on the Base Contract Duration added to the date specified to commence work in the written Notice to Proceed.

(b) Find the number of days to be added to the Base Contract Duration in the table below. Add that number of days to the Base Contract Duration to obtain the Final Contract Duration in consecutive calendar days.

M□□□□ □□S□□s□a□□a□ □□□ □□e□□□□ □ased □□ □□e □ase □□□□ra□□D□ra□□□□	**□□□ □er □□Da□s □□ ad□□s□□ e□□**
□a□□ar□	150
□e□r□ar□	120
Mar□□	90
□□r□□	60
Ma□	30
□□□e	0
□□□□	0
□□□□s□	0
Se□□e□ □er	0
□ □□□□er	0
□□□e□ □er –De□e□ □er □□	0
De□e□ □er □□– De□e□ □er □□	180

In addition, should Item No. 9.30, “Storm Water Pollution Prevention,” exist in the Contract and the Commissioner determines that the required Storm Water Pollution Prevention Plan (SWPPP) does not conform to NYSDEC’s recommended Standards, an additional 60 ccd will be added to the above Final Contract Duration, at the sole discretion of the Commissioner.

□□□□R□□ □□□D□□□□S R□□□□□□□ □□ □R□□□□□ □□ – □□S□R□□□□□

□□R□ □□□ □□□□S □□ □□S□R□□□□□M□□M□M □M□□S □□D S□□□□□□ □□□D□□□□S

□□□e□□□□er□□□□a□e□s□□□□□s□ra□□e s□□□ □□ed □□rs□a□□□□ □□□□ra□□□r□□□e □□□□□□ □ □s□ □e a□□□□ □a□□ed □□a □er□□□□a□□□□ □□ □r□□er □□□s□s□e□□□ □□□ □ar□□□□□e□□□ a□d □□□□de □□e □□□□□□ □□□ □□□□r□ a□□□□□

- □□r ea□□ □□s□ra□□e □□□□□□□□e □a□ e a□d □□□□ □□□ □er □□ss□□□□ □□□ □a□□□ □□□ □er □□□□□□□□a□d e□□e□□□□e da□es□
- □□□□□□ □□□ □s □□□s□s□e□□□ □□□ □□e re□□□re□ e□s □s□ed □e□□□ □
- □dd□□□□□a□□□s□reds □r □□ss □a□ees □□□s□s□e□□□ □□□ □□e re□□□re□ e□s □s□ed □e□□□ □ a□d
- **The number assigned to the Contract by the City (in the "Description □□ Operations" field).**

Insurance indicated by a blackened box (■) or by X in a □ to left will be re□□□red □□der □□□s □□□□ra□□

Types of Insurance (per Article 22 in its entirety, including listed paragraph)	Minimum Limits and Special Conditions
■ Commercial General Liability Art. 22.1.1	The minimum limits shall be $ 3,000,000 per occurrence and $ 6,000,000 per project aggregate applicable to this □□□□ra□□□ Additional Insureds: 1. City of New York, including its officials and employees, with coverage at least as broad as ISO Form CG 20 10 and CG 20 37, 2. All person(s) or organization(s), if any, that Article 22.1.1(b) of the □□□□ra□□requires to be named as Additional Insured(s), with coverage at least as broad as ISO Form CG 20 26. The Additional Insured endorsement shall either specify the entity's name, if known, or the entity's title (e.g., Project Manager), 3. National Grid USA ("National Grid")

■ Workers' Compensation Art. 22.1.2 ■ Disability Benefits Insurance Art. 22.1.2 ■ Employers' Liability Art. 22.1.2 ☐ Jones Act Art. 22.1.3 ☐ U.S. Longshoremen's and Harbor Workers Compensation Act Art. 22.1.3	Workers' Compensation, Employers' Liability, and Disability Benefits Insurance: Statutory per New York State law without regard to jurisdiction. □□□e□The following forms are acceptable: (1) New York State Workers' Compensation Board Form No. C-105.2, (2) State Insurance Fund Form No. U-26.3, (3) New York State Workers' Compensation Board Form No. DB-120.1 and (4) Request for WC/DB Exemption Form No. CE-200. The City will not accept an ACORD form as proof of Workers' Compensation or Disability Insurance. Jones Act and U.S. Longshoremen's and Harbor Workers' Compensation Act: Statutory per U.S. Law. ☐ Additional Requirements:
☐ Builders' Risk Art. 22.1.4	☐ Required: 100% of total bid amount ☐ Required: 100 % of total bid amount for Item(s): □□□□ra□□□r the Named Insured; the □□□□ both an Additional Insured and one of the loss payees as its interests may appear. If the □ □r□ does not involve construction of a new building or gut renovation work, the □□□□ra□□□r may provide an installation floater in lieu of Builders Risk insurance. Note: Builders Risk Insurance may terminate upon S□□s□a□□a□□ □□e□□□□ of the □ □r□ in its entirety.

■ Commercial Auto Liability Art. 22.1.5	$ 2,000,000 per accident combined single limit If vehicles are used for transporting hazardous materials, the □□□ra□□r shall provide pollution liability broadened coverage for covered vehicles (endorsement CA 99 48) as well as proof of MCS 90 Additional Insureds:
☐Contractors Pollution Liability Art. 22.1.6	$ 5,000,000 per occurrence $ 5,000,000 aggregate Additional Insureds: 1. City of New York, including its officials and employees, and 2. _____ 3. _____
☐ Marine Protection and Indemnity Art. 22.1.7(a)	$_____ each occurrence $_____ aggregate Additional Insureds: 1. City of New York, including its officials and employees, and 2. _____ 3. _____
☐ Hull and Machinery Insurance Art. 22.1.7(b)	$_____ per occurrence $_____ aggregate Additional Insureds: 1. City of New York, including its officials and employees, and 2. _____ 3. _____

☐ Marine Pollution Liability Art. 22.1.7(c)	$ 1,000,000 per occurrence $ 1,000,000 aggregate Additional Insureds: 1. City of New York, including its officials and employees, and 2. _____ 3. _____
[OTHER] Art. 22.1.8 ☐ Railroad Protection Liability Policy (ISO-RIMA or equivalent form) approved by Permittor covering the work to be performed at the designated site and affording protection for damages arising out of bodily injury or death, physical damage to or destruction of property, including damage to the Insured's own property and conforming to the following: • Policy Endorsement CG 28 31 - Pollution Exclusion Amendment is required to be endorsed onto the policy when environmental-related work and/or exposures exist. • Indicate the Name and address of the Contractor to perform the work, the Contract # and the name of the railroad property where the work is being performed and the Agency Permit. • Evidence of Railroad Protective Liability Insurance, must be provided in the form of the Original Policy. A detailed Insurance Binder (ACORD or Manuscript Form) will be accepted pending issuance of the Original Policy, which must be provided within 30 days of the Binder Approval.	$ 2,000,000 per occurrence $ 6,000,000 annual aggregate Named Insureds: 1. The New York City Transit Authority ("NYCT"), the Manhattan and Bronx Surface Transit Operating Authority ("MaBSTOA"), the Staten Island Rapid Transit Operating Authority ("SIRTOA"), the Metropolitan Transportation Authority ("MTA") including its subsidiaries and affiliates, MTA Construction & Development Company ("MTA C&D"), MTA Bus Company ("MTA Bus").

[OTHER] Art. 22.1.8

■ Professional Liability

A. The Contractor's Professional Engineer shall maintain and submit evidence of Professional Liability Insurance in the minimum amount of $1,000,000 per claim. The policy or policies shall include an endorsement to cover the liability assumed by the Contractor under this Contract arising out of the negligent performance of professional services or caused by an error, omission or negligent act of the Contractor's Professional Engineer or anyone employed by the Contractor's Professional Engineer.

B. Claims-made policies will be accepted for Professional Liability Insurance. All such policies shall have an extended reporting period option or automatic coverage of not less than two (2) years. If available as an option, the Contractor's Professional Engineer shall purchase extended reporting period coverage effective on cancellation or termination of such insurance unless a new policy is secured with a retroactive date, including at least the last policy year.

[OTHER] Art. 22.1.8 ☐ Engineer's Field Office **Se□□□□ □□□□□S□a□dard □□□□a□ S□e□□□□a□□□s**	Fire insurance, extended coverage and vandalism, malicious mischief and burglary, and theft insurance coverage in the amount of <u>$40,000</u>

[OTHER] Art. 22.1.8

☐ The Following Additional Insurance Must Be Provided:

□□ □re□a□□□ess □a□□□□□ □□s□ra□□e - The Contractor shall provide Umbrella/Excess Liability Insurance in the minimum amount of $10,000,000 per Occurrence and $10,000,000 in Aggregate. The policy terms and condition should be at least as broad as the underlying policies. The underlying policies should comply with the insurance provision as outlined by the contract. Defense cost should be in addition to the limit of liability. The City of New York, including its officials and employees, should be included as additional insured as respects to the noted project.

Per □r□□□e □□□□□ of the **S□a□dard □□□s□r□□□□□ □□□□ra□□□** The Contractor may satisfy its insurance obligations as defined in this Schedule A through primary policies or a combination of primary and excess/umbrella policies, so long as all policies provide the scope of coverage required herein.

S□□□D□□□ □

□□□□R□□ □□□D□□□□S □□ □□□S□R□□□□□□ □□□□R□□□□

□□□□R□□ □□□D□□□□S R□□□□□□□ □□ □R□□□□ □□– □□S□R□□□□□

□□R□ □□□□ □□R□□□□□□S □□ □□S□R□□□□

All certificates of insurance (except certificates of insurance solely evidencing Workers' Compensation Insurance, Employer's Liability Insurance, and/or Disability Benefits Insurance) must be accompanied by one of the following:

(1) the Certification by Insurance Broker or Agent on the following page setting forth the required information and signatures;

-- OR --

(2) copies of all policies as certified by an authorized representative of the issuing insurance carrier that are referenced in such certificate of insurance. If any policy is not available at the time of submission, certified binders may be submitted until such time as the policy is available, at which time a certified copy of the policy shall be submitted.

□□□ □□ □□□ □□R□

□□R□□□□□□□□ □□ □□S□R□□□□ □R□□□R □R □□□□□

The undersigned insurance broker represents to the City of New York that the attached Certificate of Insurance is accurate in all material respects.

_____
[Name of broker or agent (typewritten)]

_____
[Address of broker or agent (typewritten)]

_____
[Email address of broker or agent (typewritten)]

_____
[Phone number/Fax number of broker or agent (typewritten)]

_____
[Signature of authorized official, broker, or agent]

_____
[Name and title of authorized official, broker, or agent (typewritten)]

State of …….)
) ss.:
County of ……)

Sworn to before me this _____ day of _____, 20____

_____
NOTARY PUBLIC FOR THE STATE OF _____

S□□□D□□□ □

□□□□R□□ □□□D□□□□S □□ □□□S□R□□□□□ □ □□□□R□□□□

□□R□ □□□ □DDR□SS □□ □□MM□SS□□ □□R

Wherever reference is made in Article 7 or Article 22 to documents to be sent to the □□□ □ □**ss□□er** (e.g., notices, filings, or submissions), such documents must be sent through email to insurance@ddc.nyc.gov. Hard copy documents of the above requirement are no longer required.

(NO FURTHER TEXT ON THIS PAGE)

R - PAGES

REVISIONS TO STANDARD SPECIFICATIONS

NOTICE

The Specification Bulletin(s) ("SB(s)") referenced in this Section (R-Pages) may consist of revisions to the following Standard Specifications:

- New York City Department of Transportation ("NYC DOT") Standard Highway Specifications, dated 5/16/2022;
- New York City Department of Environmental Protection ("NYC DEP") Standard Sewer and Water Main Specifications, dated 8/8/2022;
- NYC Department of Environmental Protection ("NYC DEP") Standard Green Infrastructure Specifications, dated 8/1/2024; and
- NYC DEP Specifications for Trunk Main Work, dated 7/2014.

The SB(s) modify and supersede portions of the applicable Standard Specifications. The provisions contained in this Contract's I-Pages, S-Pages and SW-Pages may further modify the applicable Standard Specifications.

The following active SB(s) are included as part of this contract:

- *SB 22-006 – INCREMENTAL COST NEAR TRANSIT FACILITIES*
- *SB 23-001 – SEWER DESIGN STANDARDS*
- *SB 23-002 – PIPE BOLLARD*
- *SB 23-003 – MOBILIZATION*
- *SB 23-004 – SUSTAINABLE CONSTRUCTION*
- *SB 24-001 – CEMENT, PORTLAND*
- *SB 24-002 – SHEETING AND BRACING*
- *SB 24-003 – CORNER CURB*
- *SB 24-004 – PIGMENTING*
- *SB 24-006 – REINFORCED CONCRETE SEWERS*
- *SB 24-007 – DRAINS TO BE KEPT CLEAN*

- *SB 24-008 – PAYMENT REQUISITIONS*
- *SB 24-010 – FLAGGERS, CROSSING GUARDS, AND PEDESTRIAN MANAGERS*

The SB(s) are available online at:
http://www1.nyc.gov/site/ddc/resources/specification-bulletins.page

(NO FURTHER TEXT ON THIS PAGE)

S - PAGES

□□□□R□□ □□D S□□□□□□ □R□□S□□□S□

□□□ □□□□R□□ □R□□S□□□S
□□□ □□□□ □□ □R□□□□□S□□□□□□□ □R□□S□□□S
□□□ S□□ □R □ □ □□□R M□□□ □R□□□□□S□□□□□□□
□R□□S□□□S
□D□ □R□□□ □□□R□S□R□□□□R□ □R□□S□□□S

□□□□□

THE PAGES CONTAINED HEREIN (S-PAGES) ARE GENERAL AND SPECIAL PROVISIONS THAT APPLY TO THE WORK AND ARE PART OF THE CONTRACT DOCUMENTS.

(NO TEXT ON THIS PAGE)

□□□□□ □□ □□□□□□□S

□□□ □□□□R□□ □R□□S□□ □S

□R□□□□	D□S□R□□□□□	□□□□ □□□
A	LINES AND GRADES	S-1
B	SPECIFIC TRAFFIC STIPULATIONS	S-1
C	HOLIDAYS CONSTRUCTION EMBARGO	S-1
D	CONTRACT ITEMS THAT INCLUDE BACKFILL AS PART OF THEIR WORK	S-2
E	ACCELERATED PROJECT SCHEDULE AND COMBINATION OF STAGES	S-2
F	DISPOSAL OF EXCESS EXCAVATED MATERIAL	S-2
G	NO EXTENSIONS OF TIME FOR WINTER SHUT-DOWN	S-2
H	PRIVATE UTILITY HARDWARE ADJUSTMENTS	S-2
I	SURVEY MONUMENTS	S-2
J	RESTORATION OF ADJACENT AREAS	S-2
K	FLAGGERS	S-2
L	FUEL COST	S-3
M	NYCDPR CONSTRUCTION PERMITS AND OTHER REQUIREMENTS	S-3
N	START OF CONTRACT WORK	S-4
O	STANDARD WORKING HOURS	S-4
P	TREE BARRIERS	S-4
Q	UTILITIES	S-4
R	HOUSE CONNECTIONS	S-4
S	STREET LIGHT AND TRAFFIC SIGNAL	S-4
T	SAW CUT	S-5
U	PRE-CONSTRUCTION STAGE	S-5

□R□□□□	D□S□R□□□□□□	□□□□ □□□
V	EXISTING SEWERS. WATER AND APPURTENANCE	S-5
W	RECONNECTING EXISTING SEWERS TO NEW MANHOLES	S-5
X	VIBRATION MONITORING	S-5
Y	CITY ASSETS	S-6
Z	“AS-BUILT” DRAWINGS FOR WATER MAINS AND APPURTENANCES 24-INCHES (600-MM.) AND LARGER	S-6
AA	NO ADDITIONAL PAYMENT	S-7
AB	SHEETING AND EXCAVATION AT TRANSIT FACILITIES	S-7
AC	ARCHAEOLOGICAL DISCOVERIES	S-7
AD	USE OF CITY WATER	S-8
AE	PUBLIC DISSEMINATION OF INFORMATION	S-8
AF	PRICES TO INCLUDE	S-9

□□□□□□□ □□ □R□□□□□ S□□□□□□□□ □R□□□S□□□S

(NO TEXT)

S□□□□□□S □DR□□ □□□S

(NO TEXT)

□□□S□□ □R □ □ □□□R M□□□□ □R□□□□□ S□□□□□□□□ □R□□□S□□□S

(NO TEXT)

□D□□R□□□□ □□□R□S□R□□□□R□ □R□□□S□□□S

(NO TEXT)

S

[illegible] [illegible]R[illegible] [illegible]R[illegible] [illegible]S[illegible] [illegible]S

A. LINES AND GRADES. The Contractor must furnish lines and grades in accordance with Section 1.06.27 of the NYCDOT Standard Highway Specifications, except that survey controls established for this project may no longer exist and the Contractor will be required to re-establish the survey control information using official Borough Survey Control Monuments and Bench Marks, where they exist. The Contractor must check with Topographic Section of the Borough President's Office as to the reliability and accuracy of the data to be used for lines and grades.

B. SPECIFIC TRAFFIC STIPULATIONS. Under this contract, the Contractor must perform the work in strict accordance with the requirements of Section 6.70 in the Standard Highway Specifications, specific traffic stipulations as called for on the plans, Office of Construction Mitigation and Coordination (OCMC) Traffic Stipulations attached to the end of these Special Provisions, and the directions of the Engineer. In case of a conflict, the Engineer's decision will be final.
The Contractor must plan and schedule the work in order to accommodate all special events listed in the NYCDOT Special Events Annual Calendars. The calendars are available at the following link:

https://nycdot.sharepoint.com/:f:/s/publicshare/Ei2XN4G99_JFkdrtjD_cJ0QBtSPr2xhVrApcqAs1KSLpeA?e=j276PF

In addition, the cost of compliance with requirements of the OCMC Traffic Stipulations, unless otherwise provided for, will be deemed included in the prices bid for all scheduled items..

C. HOLIDAY CONSTRUCTION EMBARGO. A special Holiday Construction Embargo will be in effect on the Friday of the week preceding Thanksgiving Day week from 6:00 AM to 11:59 PM and again from the Monday of Thanksgiving Day week from 6:00 AM through January 2, at 11:59 PM. Roadway and sidewalk construction activities will be restricted during the embargo period on the streets listed below*.

Any permits issued prior to the date of this notice, for work during this embargo period on the streets listed below* which do not already have the permit stipulation "410" are hereby suspended for the period noted above. All permittees must comply with this embargo unless a special waiver is granted by OCMC. Waiver requests must be filed at least thirteen days before Thanksgiving Day, in the Permit Office by filing a "Request for Roadway/Sidewalk Permits During "Embargo Periods" and submitting supporting documentation. Waiver requests should only be submitted for critical reasons for a specific project. If a waiver is granted, the applicant will be notified so they can apply for the approved permits. Waivers **are** [illegible] required for ongoing Building Construction Activity Permits which already include the "410" permit stipulation. Waiver request forms may be obtained at any Permit Office or on the Department of Transportation's website at:
[illegible] **d** [illegible] **d** [illegible] **ads** [illegible] **d** [illegible] **da** [illegible] **e** [illegible] **a** [illegible] **d** [illegible]
Prior to this embargo period all necessary measures must be taken so that all roadways and sidewalks are in proper condition to allow for the expeditious and safe movement of vehicular, bicycle and pedestrian traffic. Tool carts, cable reels, containers, and material stored on roadways must be removed during the embargo period.

The opening of utility access covers is prohibited on any of the streets noted below** between the hours of 6:00 AM and midnight unless the utility or Contractor files for an Emergency Authorization Number as required by Section 2-07 of the Department of Transportation's Highway Rules. The planned opening of utility access covers may occur during the hours of 12:01 AM and 5:59 AM where no authorization number is required.

Temporary restoration of the streets and sidewalks and removal thereof, if required for the Holiday Embargo period, will be paid for under the appropriate scheduled items.

No extension of time due to the shutdown period will be granted to the Contractor for completion of the work.

[illegible]ease [illegible]e [illegible]a[illegible]s e[illegible] [illegible]ar[illegible] [illegible]a[illegible]es [illegible] [illegible]D[illegible] [illegible]s r[illegible] [illegible]er[illegible] [illegible]s[illegible]
**** List of street and maps of the affected locations are available by borough on the Department of Transportation's [illegible]e[illegible]s[illegible]e a[illegible] [illegible] d[illegible] [illegible] [illegible]r s[illegible]ra a r s[illegible] [illegible]**

D. CONTRACT ITEMS THAT INCLUDE BACKFILL AS A PART OF THEIR WORK. The following will pertain to all contract items that have backfill as a part of their work: Backfilling will comply with Subsection 4.11.3 of the Standard Specifications and no additional payment will be made for any Highway or Street Lighting work item requiring Contractor to furnish additional fill material to meet these requirements when backfilling.

E. ACCELERATED PROJECT SCHEDULE AND COMBINATION OF STAGES. Contractor will plan and/or stage his/her work schedule using all hours/days available. Contractor is advised that all applicable unit prices will include, for the purpose of this contract, all overtime costs, premium time costs, shift differentials required to complete construction within the specified "Time(s) of Completion" stipulated in this contract.

Contractor will be permitted to accelerate this project, to combine stages and/or work sequences. Any such changes will be shown in the construction schedule, to be furnished in accordance with the General Provisions of the Standard Specifications.

F. DISPOSAL OF EXCESS EXCAVATED MATERIAL. All excess excavated material, with the exception of contaminated material, will become the property of the Contractor and will be properly disposed of away from the site, at the Contractor's expense. Contaminated material will be disposed of separately in accordance with contract requirements.

G. NO EXTENSION OF TIME FOR WINTER SHUT-DOWN. Where the Contractor's approved work schedule for installing sidewalk, curb, roadway base and/or pavement falls within the winter period of December 1st through April 1st, the Contractor will NOT be granted an extension of time for completion of this contract due to the winter shut-down period, unless otherwise provided in Schedule A.

H. PRIVATE UTILITY HARDWARE ADJUSTMENTS. will be performed by the owning utility company or its agent, at its expense. The Contractor must notify the utility company 72 hours prior to start of work at each location where its hardware requires adjustment.

I. SURVEY MONUMENTS. When working in the vicinity of survey monument the Contractor will hand excavate per Item 8.02 AB-S, 8.02 A and 8.02 B (as applicable), at City Survey Monuments, for a distance of five (5) feet around each monument, as directed by the Engineer.

J. RESTORATION OF ADJACENT AREAS. The Contractor will be required to remove all form work. In planting strip areas, the Contractor will be required to restore areas damaged as a result of the Contractor's operations, to the satisfaction of the Engineer, with sod. The Contractor will also, as directed by the Engineer, make safe adjacent areas to the Contractor's work, such as: restoring missing or damaged pavement markings that were removed or damaged as a result of the Contractor's operations (as per requirements of Section 6.44 in the Standard Specifications); resetting granite blocks in tree pits; and, applying binder mixture (Item 4.02 CA or as applicable) where badly broken sidewalk or curb may create a dangerous condition just outside his area of operation, where and when directed by the Engineer.

All restoration work must be performed to the satisfaction of the Engineer.

K. FLAGGERS. The Contractor is notified that wherever the Item No. "6.52" and words "flagger", "flagperson" and "flagman" are used in the contract documents and drawings it will mean the Item No. "6.52 CG" and the words "Crossing Guard", respectively.

L. FUEL COST. The Contractor is notified that the fuel cost per gallon used in the formula under Sub-Article 26.2.8 of the Standard Construction Contract for Extra Work will be derived from the fuel price index for the United States East Coast published weekly by the United States Energy Information Administration ("USEIA"), and available on its website at [illegible] The USEIA-published cost per gallon for the applicable fuel on the East Coast for the week in which the first day of each calendar quarter during the contract term occurs (i.e., January 1st, April 1st, July 1st and September 1st) will be used in the reimbursement formula for all [illegible] invoiced that was performed during that calendar quarter. Should the USEIA stop publishing this fuel price index, the fuel cost per gallon will be determined by reference to a substitute index to be agreed upon by the Contractor and the City.

M. NYCDPR CONSTRUCTION PERMITS AND OTHER REQUIREMENTS.

1. At least thirty (30) days prior to the upcoming start of construction at or near the New York City Department of Parks and Recreation (NYCDPR) land , the Contractor is required to issue a notice to NYCDPR about the start of construction activity. At least 30 days in advance of the Order to Work Date, the Contractor must notify the New York City Department of Parks and Recreation (NYCDPR) of the upcoming start of construction by emailing interagency@parks.nyc.gov.

2. Parks Construction Permits are required for all work on Parkland. Construction Permits may also be required for work on sidewalks adjacent to Parks properties or other areas maintained by NYCDPR such as Greenstreets depending on the scope of work. It is the Contractor's responsibility to coordinate with Parks via email at [illegible] to establish whether Construction Permits are required for the contract scope of work.

3. The Contractor will not be permitted to store, stage, stockpile, barricade, lay down construction materials or equipment, or otherwise impede access to Parkland, Greenstreets, or sidewalks in the right-of-way fronting Park properties unless such permission is granted by NYCDPR via issuance of a Parks Construction Permit.

4. The Contractor must obtain the necessary Parks Construction Permit from NYCDPR prior to the start of work on Parkland or areas under Parks' jurisdiction. The Construction Permit application is found online at https://www.nycgovparks.org/permits/construction.

5. When no Construction Permit is required, the contactor must notify Parks at interagency@parks.nyc.gov at least one week in advance of any construction adjacent to Greenstreets or in the right-of-way fronting Parks properties to allow for coordination as needed.

6. The Contractor is responsible for the protection of any Greenstreets, sidewalks, and other landscape features under NYCDPR jurisdiction that are adjacent to or enclosed by the construction area, including hardscape, landscape, shrubs, and trees. Any areas and features disturbed or damaged during construction activity are the responsibility of the Contractor to restore and repair.

7. Many NYCDPR properties are indicated on the publicly accessible online mapping resource of the New York City Department of Information Technology and Telecommunications (DOITT) at [illegible]/. However, the map is not exhaustive, and Contractors should confirm Parks properties in the vicinity of their work with NYCDPR.

8. The Contractor must take necessary precautions to prevent interference with or damage to utilities or other facilities during construction. The cost of all work connected with maintaining and protecting utilities affected by the work be borne by the Contractor and the cost will be deemed included in the price bid for the various items in the contract.

9. In the event the Contractor damages an existing utility or interrupts utility service, the Contractor will immediately notify its owner and the Engineer and must commence repair/replacement work as instructed by the Engineer.

10. In the event the Contractor causes an interruption in utility service, the Contractor will immediately arrange for service to be restored and may not cease the repair work until service is restored. The Contractor will not continue work until the service is restored, unless otherwise directed by the Engineer. All corrective utility work will be acceptable to the engineer and the subject utility owner.

11. If any utility service or connection of unknown ownership is encountered during construction which appears to enter or serve Parkland, Contractor must contact Parks at **era e ar s** to inquire if Parks is the owner of such utility.

N. START OF CONTRACT WORK. The Contractor is notified that a Notice To Proceed (NTP) date will be issued for work to commence within 21 to 30 Days of Contract Registration.

O. STANDARD WORKING HOURS: In absence of OCMC Traffic Stipulations, Section 1.06.23 (P) of NYC DOT STANDARD HIGHWAY SPECIFICATIONS regarding standard working hours is to be followed is to be followed. Work performed outside the standard working hours must be pre-approved by NYC DDC.

P. TREE BARRIERS. The Contractor will furnish, install, maintain and subsequently remove temporary Protective Tree Barriers. Protective Tree Barriers will be Type B, unless otherwise directed by the Engineer, and will be constructed and installed as shown on the Protective Tree Barrier sketch in Department Of Transportation, Standard Highway Details Of Construction, Drawing No. H-1046A, as directed by the Engineer, and in accordance with Department of Parks and Recreation requirements.

Price of the tree barriers must be included in the in the unit prices bid for all scheduled items.

Q. UTILITIES. All utility locations and invert elevations are not guaranteed, nor is there any guarantee that all existing utilities, whether functional or abandoned within the project area are shown.

R. HOUSE CONNECTIONS. All existing house connections will be maintained and supported during construction. The Contractor will replace any existing house connection damaged as a result of the Contractor's construction operations as ordered by the Engineer at no cost to the City.

S. STREET LIGHT AND TRAFFIC SIGNAL. The Contractor is responsible for any damage to the existing street lighting and traffic signal equipment, including underground conduits and the safety of both pedestrian and vehicular traffic for the duration of the contract.

Should any conduits, cables or foundations need repair due to the Contractor's negligent operations during construction, all work will be performed according to NYCDOT Bureau of Traffic's Standard Drawings and Specifications and City of New York DOT System Engineering Specifications (dated November 2013) at the sole expense of the Contractor.

It is the Contractor's responsibility to secure an approved electrical Contractor to perform all traffic signal work (if any). For list of approved electrical Contractors, contact Hasib Amini or James Celentano, New York City Department of Transportation at (212) 839-3386 / (212) 839-3129.

T. SAW CUT. The Contractor is advised that where the existing roadway pavement is designated to be replaced from curb to curb, then no full depth saw cutting of pavement for sewer

and water main trenches will be required, except at the limits of full width pavement restoration. No separate or additional payment will be made for any saw cutting.

U. PRE-CONSTRUCTION STAGE. The Contractor is advised that the Base Contract Duration (consecutive calendar days "ccds") must also include pre-construction stage from the Notice To Proceed date. During this stage the Contractor is required to submit the necessary shop drawings, obtain all permits and submit the health and safety plan for review and approval. The Engineer's field office will also need to be established during this pre-construction stage period. Failure to comply with the pre-construction stage requirements may result in assessing liquidated damages to the Contractor for everyday beyond the pre-construction stage duration. The liquidated damage will be of equivalent value as identified in the Schedule A for work beyond the construction completion date.

V. EXISTING SEWERS, WATER AND APPURTENANCE. The Contractor is notified that at some locations there may exists sewers, manholes, water mains, etc., which are to remain undisturbed and are in close proximity to the line of the proposed work. The Contractor exercise extreme care, minimize the trench width of the proposed sewers and take all necessary precautions in placing sheeting and during excavation of the trenches to prevent any damage to the existing structures, pavement, curbs, and sidewalks that are to remain while working adjacent to them. The Contractor maybe restricted to use wood sheeting at certain critical locations as directed by the Engineer. Should any damage occur to any portion of the existing structures that are to remain due to the Contractor's operations, the Contractor will make all repairs to the existing structures to the satisfaction of and as directed by the Engineer. The cost of such repair will be borne by the Contractor, at no cost to the City. Additional cost to use wood sheeting specifically to ensure integrity of existing sewer structures will be deemed included in all bid items for work.

W. RECONNECTING EXISTING SEWERS TO NEW MANHOLES. If there are locations on the contract plans, where the Contractor is required to reconnect all existing sewers to the proposed manholes in this contract. The said manholes will be fabricated to provide openings for the existing sewers at the specified invert elevations as shown on the contract drawings. The cost of reconnecting existing sewer pipes to new manholes, including concrete collar with steel reinforcements and/or grouting around the existing sewer pipes at the openings and all work necessary to complete the pipe reconnection, to the satisfaction of the Resident Engineer will be deemed included in the prices bid for all items of work. No additional payment will be made.

[ARTICLE "X" IS ONLY APPLICABLE IF ITEMS FOR VIBRATION MONITORING ITEM NO. 76.31 IS IN THE BID SCHEDULE]

X. VIBRATION MONITORING. In case of structures requiring vibration monitoring, the Contractor, in addition to Continuous Real Time Monitoring for Vibrations as determined in the Construction Report must provide Continuous Real Time Monitoring for Vibrations of existing buildings/structures adjacent to or in the proximity of different types of construction activities being conducted including, but not limited to, installation of sheeting for construction of proposed water and sewer mains, installation of sheeting for excavation of jacking/receiving pits, direct jacking of sewers, piling work or as directed by the Engineer.

Y. CITY ASSETS. The Contractor is advised that any City owned light poles, traffic signals, street name signs, traffic signs and encumbrances including, but not limited to, underground conduit displaced as the result of the installation of the new sewers, water mains, catch basins, catch basin connections and appurtenances will be replaced in kind and as directed by the Engineer. The cost of such work will be deemed included in the prices bid for all items of work under this contract.

[ARTICLE "Z" IS ONLY APPLICABLE FOR WATERMAIN 24-INCHES AND HIGHER]

Z. <u>"AS-BUILT" DRAWINGS FOR WATER MAINS AND APPURTENANCES 24-INCHES (600-MM.) AND LARGER</u>: Upon the completion of the work for each Capital Project and as a condition precedent to obtaining the certificate for Substantial Completion for each Capital Project under Article 44 of the Contract, the Contractor will furnish "As-Built" drawings for water mains and appurtenances 24-inches and larger to the City. The Contractor will prepare and submit the "As-Built" record drawings to the Engineer for approval. Approved "As-Built" drawings will be delivered to the Department of Design and Construction, 30-30 Thomson Avenue, Long Island City, New York, 11101-3045. The following guideline is provided for the preparation of "As-Built" record drawings:

1. The Contractor will prepare the "As-Built" drawings on AutoCAD and will provide to the City two (2) sets of Mylar and AutoCAD files on a CD. The drawings on CD's and the plotted Mylar's will conform to the standard size of 22" x 36" (559-mm. x 914-mm.) using a 1"=30' (1:360) horizontal and 1"=10' (1:120) vertical scale. The Mylar will be 3-mil in thickness.

2. The "As-Built" drawings will include but not be limited to the following guidelines summarized below:

(a) Drawings will consist of the same legend and layout of title boxes shown on the contract drawings.

(b) Each plotted Mylar drawing will contain the signature and stamp of the Contractor's NYS Professional Engineer/Registered Architect.

(c) The drawings will include:

- street name and crossing street(s) or distance from;
- north arrow;
- property lines and widths;
- legal and existing street widths, street alignment and grades;
- "new" curb lines and widths;
- water main center line measured off the "new" curb line;
- horizontal stationing for all valves, hydrants, outlets, blow-offs, house service connections, etc., measured on a horizontal line as established by the Borough Office Bureau of Topographic;
- alignment and appurtenance location stationing, and deflection angles;
- cover and elevations (Datum used will be that of the Borough where work is located);
- location of pipe joints;
- profile of all piping;
- complete details of all outlet piping roundabouts;
- complete details of all blow-off connections to the sewer;
- complete details of all air cocks;
- location of taps and access manholes;
- location of all cathodic protection stations;
- Venturi sensing lines plans and profiles;

- all appropriate notes.

3. The cost of preparing and submitting “As-Built” approved drawings will be deemed included in the prices bid for all scheduled bid items in the contract. No separate or additional payment will be made for this work.

AA. NO ADDITIONAL PAYMENT. The Contractor is advised that any fences, guardrails, boulders, asphalt walkway of the park, fixtures, other encumbrances removed within project limits during construction will be replaced in kind to the satisfaction of the Engineer. The cost of such work will be deemed included in the prices bid for all contract items of work and no additional or separate payment will be made.

AB. SHEETING AND EXCAVATION AT TRANSIT FACILITIES. In case of transit facilities like MTA, LIRR, METRO NORTH etc., the Contractor will exercise extreme caution and take all necessary precautions in placing sheeting and excavation to prevent any damage to the existing underground or overhead structures and its appurtenances during construction work throughout the project area. The Contractor must take full responsibility to protect the said structures and its appurtenances and any damage caused by the Contractor’s operations must be made good by the Contractor to the satisfaction of the Engineer at no additional cost to the City.

The Contractor must submit shop drawings to the Transit facilities showing all the details and methods of construction, such as, sheeting and bracing, including the Contractor’s procedure and sequence of construction, supporting and/or protection of the existing structures and its appurtenances, with necessary design calculations for approval prior to starting of the construction. The design will be made by a New York State Licensed Professional Engineer skilled in this type of construction and as further evidenced by the imprint of Professional Engineer’s seal and signature on all drawings. The cost of this work will be deemed included in the price bid for all items of work under this contract.

AC. ARCHAEOLOGICAL DISCOVERIES. The Contractor is notified that if requested by the Resident Engineer and the City, the Contractor will be required retain the services of an Archaeologist (the "City's Archaeologist") for this project.

The City's Archaeologist will be notified in advance and will be present on site during sub-surface excavations as deemed necessary. The City's Archaeologist will be authorized to halt construction at any time in order to record and/or recover any archaeological resources encountered during excavations, and to stabilize in place any human remains encountered.

For the purpose of evaluating and recording archaeological resources, the City's Archaeologist will be allowed to enter trenches provided all standard safety requirements are met. It is understood that some construction down time may be necessary.

In the event that human remains, and/or other significant archaeological deposits are encountered during construction or archaeological investigations, Landmarks Preservation Commission (LPC) will be notified as directed by the City's Archaeologist and the State Historic Preservation Office (SHPO) requires that the following protocol is implemented:

1. At all times human remains must be treated with the utmost dignity and respect. Should human remains be encountered work in the general area of the discovery will stop immediately and the location will be immediately secured and protected from damage and disturbance.

2. Human remains or associated artifacts will be left in place and not disturbed. No skeletal remains or materials associated with the remains will be collected or removed until appropriate consultation has taken place and a plan of action has been developed.

3. The County coroner and local law enforcement as well as the SHPO and the involved agency will be notified immediately. The coroner and local law enforcement will make the official ruling on the nature of the remains, being either forensic or archeological. If the remains are archeological in nature, a bio-archaeologist will confirm the identification as human.

4. If human remains are determined to be Native American, the remains will be left in place and protected from further disturbance until a plan for their protection or removal can be generated. The involved agency will consult SHPO and appropriate Native American groups to determine a plan of action that is consistent with the Native American Graves Protection and Repatriation Act (NAGPRA) guidance.

5. If human remains are determined to be Euro-American, African-American, etc., the remains will be left in place and protected from further disturbance until a plan for their avoidance or removal can be generated. Consultation with the SHPO and other appropriate parties will be required to determine a plan of action.

Should extra work be ordered by the Resident Engineer as a result of any archaeological discoveries, it will be paid for from the Fixed Sum included in, and in accordance with Item HW-908 Allowance for Extra Work Due To Archaeological Discoveries.

AD. USE OF CITY WATER. Please refer to NYCDOT STANDARD HIGHWAY SPECIFICATIONS (May 16, 2022), Sub Section 1.06.23 (A), Rules, Laws, and Requirements, for use of City water.

AE. PUBLIC DISSEMINATION OF INFORMATION. The Contractor agrees to hold confidential, both during and after the completion or termination of this Contract, all of the reports, information, or data, furnished to, or prepared, assembled or used by, the Contractor under this Contract. The Contractor agrees to maintain the confidentiality of such reports, information, or data by using a reasonable degree of care, and using at least the same degree of care that the Contractor uses to preserve the confidentiality of its own confidential information. The Contractor agrees that such reports, information, or data will not be made available to any person or entity without the prior written approval of the Commissioner. The obligation under this Section to hold reports, information or data confidential will not apply where the Contractor is legally required to disclose such reports, information or data by virtue of a subpoena, court order or otherwise (“disclosure demand”), provided that the Contractor complies with the following: (1) the Contractor will provide advance notice to the Commissioner, in writing or by e-mail, that it received a disclosure demand for such reports, information or data and (2) if requested by the Commissioner, the Contractor will not disclose such reports, information or data until the City has exhausted its legal rights, if any, to prevent disclosure of all or a portion of such reports, information, or data. The previous sentence will not apply if the Contractor is prohibited by law from disclosing to the City the disclosure demand for such reports, information or data.

The Contractor will restrict access to confidential information to persons who have a legitimate work-related purpose to access such information. The Contractor agrees that it will

instruct its officers, employees, and agents to maintain the confidentiality of any and all information required to be kept confidential by this Contract.

The Contractor, and its officers, employees, and agents will notify the Commissioner, at any time either during or after completion or termination of this Contract, of any intended statement to the press or any intended issuing of any material for publication in any media of communication (print, news, television, radio, Internet, etc.) regarding the services provided or the data collected pursuant to this Contract at least twenty-four (24) hours prior to any statement to the press or at least five (5) business days prior to the submission of the material for publication, or such shorter periods as are reasonable under the circumstances. The Contractor may not issue any statement or submit any material for publication that includes confidential information as prohibited by this Section.

At the request of the Commissioner, the Contractor will return to the Commissioner any and all confidential information in the possession of the Contractor or its subContractors. If the Contractor or its Subcontractors are legally required to retain any confidential information, the Contractor will notify the Commissioner in writing and set forth the confidential information that it intends to retain and the reasons why it is legally required to retain such information. The Contractor will confer with the Commissioner, in good faith, regarding any issues that arise from the Contractor retaining such confidential information. If the Commissioner does not request such information, or the Law does not require otherwise, such information will be maintained in accordance with the requirements set forth in the Contract Documents.

AF. PRICES TO INCLUDE. No direct payment will be made for costs incurred in complying with the foregoing Special Provisions, unless otherwise provided. Said costs will be deemed to have been included in the prices bid for all the scheduled contract items.

□□□

(NO TEXT ON THIS PAGE)

NOTICE

The Standard Sewer And Water Main Specifications of the Department of Environmental Protection, Sewer Design Standards of the Department of Environmental Protection, Water Main Standard Drawings of the Department of Environmental Protection, Specifications For Trunk Main Work of the Department of Environmental Protection and the Standard Highway Specifications of the Department of Transportation of The City of New York, must be included as part of the contract documents. These said specifications and standard drawings are hereby revised under the following section headings:

A. NOTICE TO BIDDERS
B. REVISIONS TO THE STANDARD HIGHWAY SPECIFICATIONS
C. REVISIONS TO THE STANDARD SEWER AND WATER MAIN SPECIFICATIONS
D. REVISIONS TO THE SPECIFICATIONS FOR TRUNK MAIN WORK

(NO TEXT ON THIS PAGE)

A. NOTICE TO BIDDERS

(1) The Contractor is advised that this contract may include locations in other boroughs. At the discretion of the Commissioner via express written consent, locations beyond the limits of Brooklyn, may be included only if there is no active contract for the identical work in the other borough. The cost of the work for these locations must be deemed included in the prices bid for all contract items.

(2) The Contractor must furnish, install, maintain and subsequently remove temporary Protective Tree Barriers. Protective Tree Barriers must be Type B, unless otherwise directed by the Engineer, and must be constructed and installed as shown on the Protective Tree Barrier sketch in Department Of Transportation, Standard Highway Details Of Construction, Drawing No. H-1046A, as directed by the Engineer, and in accordance with Department of Parks and Recreation requirements.

(3) (A) There is no provision for "ENGINEER'S FIELD OFFICE" in this contract, as per **New York City Department of Transportation (NYCDOT) Standard Highway Specifications Section 6.40 - Engineer's Field Office**.

(B) There is no item for "MOBILIZATION" in this contract, except for Mobilization for dewatering under Item No. DSS008A. The cost for mobilization must be deemed included in the prices bid for all contract items of work.

(4) The Project Sign as per **New York City Department of Transportation (NYCDOT) Standard Highway Specifications Subsection 1.06.46 - Project Sign** will not be required on this contract. However, the Contractor will be required to provide Temporary Notification Signs in accordance with **New York City Department of Transportation (NYCDOT) Standard Highway Specifications Subsection 1.06.46A - Temporary Notification Signs**.

(5) The Contractor is responsible for any damage to the existing street and traffic signal equipment, including underground conduits and the safety of both pedestrian and vehicular traffic for the duration of the contract.

Should any conduits, cables or foundations need repair due to the Contractor's negligent operations during construction, all work must be performed according to NYCDOT Bureau of Traffic's Standard Drawings and Specifications at the sole expense of the Contractor.

It is the Contractor's responsibility to secure an approved electrical contractor to perform all traffic signal work (if any). For list of approved electrical contractors, contact **Mr. Hasib Amini** or **James Celentano** of New York City Department of Transportation at (212) 839-3386 / (212) 839-3129.

(6) The Contractor will be required to prepare and submit "**As Built**" sewer record drawings to the Engineer for approval, at the completion of each installation. Drawings submitted at the completion of the entire contract after all installations must not be accepted. Approved "**As Built**" drawings must be delivered to the Department of Environmental Protection, Chief of Emergency Construction, 59-17 Junction Boulevard, 6th Floor - High Rise, Corona, New York, 11368, Tel. No. (718) 227-1868. The following guideline is provided for the preparation of "**As Built**" sewer record drawings:

(A) Drawings must be prepared for each individual unrelated location. The drawings must be submitted in CADD format on CD's along with a plotted Mylar for each location drawing. The drawings on CD's and the plotted Mylar's must be legal size (8-1/2" x 14"). The Mylar must be 3-mil in thickness.

(B) The "**As Built**" drawings must conform to Department of Environmental Protection (DEP) Emergency Construction Drawings (ECD). A sample copy of the ECD may be obtained at the above office together with DEP guidelines. These DEP guidelines are summarized below:

(1) Drawings must consist of the same legend and layout of title boxes shown on the sample ECD drawing.
(2) Drawings must consist of a location plan view on one sheet. The location plan view must be

drawn Not-To-Scale.

(3) Drawings must contain a note making reference to the datum used. (Datum used must be that of the Borough where the sewer is located.)

(4) Each plotted Mylar drawing must contain the signature and stamp of the Contractor's NYS Professional Engineer/Registered Architect.

(5) The location plan view must include:

(a) street name and two (2) crossing streets or distance from;
(b) north arrow;
(c) property lines and widths;
(d) curb lines and widths;
(e) sewers, manholes, catch basins, connections (No horizontal bends allowed on sewer lines);
(f) sewer sizes, materials (ESVP, RCP, DIP, etc.), and types (New, Existing, Sanitary, Storm, Combined, etc.);
(g) sewer length (between centerlines of manholes);
(h) sewer flow direction;
(i) offsets of sewer lines or extensions from property lines (not curb lines);
(j) foundations (concrete cradle, stone ballast, piles, etc.);
(k) manholes types (Precast, Concrete, Brick, A-1, A-2, etc.);
(l) manhole elevations (both rim and invert);
(m) manhole stationing along installed sewers;
(n) catch basins types (Type 1, Type 2, etc.);
(o) catch basin connections;
(p) show actual number of manholes and catch basins;
(q) house connection spurs (stations and locations);
(r) address of house connections (new connections and reconnections);
(s) house connection information at curb (station, length, depth and offset from the curb);
(t) details of non-standard structures or appurtenances constructed;
(u) location of all existing and installed offset distances from property lines;
(v) for shotcreted sewers (thickness and reinforcement of shotcreting); and
(w) all appropriate notes.

(6) Examples of notes that can be used are as follows:

(a) Unless otherwise noted, all house connections are 6" ESVP;
(b) Unless otherwise noted, all catch basins are Standard Type 1;
(c) Unless otherwise noted, all new curb connections are at a depth of approximately 8-feet at the curb and are 2-feet inside the curb line;
(d) Unless otherwise noted, all built manholes are brick;
(e) Unless otherwise noted, all catch basin connections are 12" DIP on crushed stone;
(f) unless otherwise noted, all ESVP sewers are installed on 6" concrete cradle;
(g) Pipe lengths are measured from inside face of manhole to inside face of manhole.

(C) The cost of preparing and submitting "**As Built**" approved drawings must be deemed included in the prices bid for all scheduled bid items in the contract. No separate or additional payment will be made for this work.

(7) The Contractor will be required to prepare and submit Field Cards and Tap Cards for any water main work that may be required during the sewer repair work. The following guideline is provided for the preparation of "Field Cards " and "Tap Cards. A sample copy of Tap Card and Field Card may be provided to the contractor by the Engineer upon request.

I. FIELD CARDS:

(A) Basic Information Required on each Field Card Drawn:

1. The information provided in the header section of the field card should include the following:

Borough

- Date (Month / Year)
- General Description
- General Location

- Contract No.
- Contractor's Name
- Resident Engineer's Last Name (REI Consultant Name - If Applicable)
- Inspector's Last Name (REI Consultant Name - If Applicable)

2. The pipe information drawn on the field card should be oriented so that the North Arrow is pointing to the top or the right side of the field card.
3. The name of street or avenue in which the water main was installed and any crossing street passed should be provided. Each field card is an independent drawing and identification of streets and cross streets should not be dependent on adjacent cards.
4. Curb lines should be clearly indicated and labeled.
5. Each fitting drawn should be identified by size and type.
6. Each full length piece of pipe need not be drawn and stationed, but should be indicated by representative or nominal lengths (i.e. 5 F.L.@18'-11" +/- or 5 F.L.@18.92' +/-).
7. a) All pipe and fitting joints should be noted as to type:
   - MJ - Mechanical Joint
   - PO - Push-on Joint
   - LJ - Lead Joint
   - FL - Flange
   - etc

   b) Restraint for all pipe and fitting joints should be noted in detail:

Mechanical Joint Restraint
- WRG - Wedge-type Retainer Gland (Ebaa MegaLug or equivalent)
- RG - Retainer Gland w/ set screws Plain Gland

Push-On Joint Restraint
- FLG - Field Lok Gasket
- TR-Flex
- Snap-Lok
- etc.

Rods & Bands

The location of all tie rods and bands should be indicated. The number of, diameter and length of rods used and number of bands installed must be recorded on the card. Indicate all wedge restraint glands used in conjunction with "Rodding".

8. Cover (distance from pavement surface to top of pipe or fitting) should be provided every 50 feet or so, at start and end of sudden deviations caused by vertical or combination (horizontal & vertical) offsets and where the new pipe is connected to the existing water main (i.e. C=4'-7" or C=4.58').
9. Centerline of pipe to curb line distance (a.k.a. lane dimension) should be provided for each block, deviations and where the new pipe is connected to the existing water main.
10. Every mainline & hydrant valve locations must be referenced to from the center of the valve to the parallel and the nearest projected perpendicular curb line. The building line to curb line distances at each corner should be noted as well. This will allow DEP to locate any buried or paved over valves boxes in an emergency even if the curb line had been altered during a street reconstruction after the water main's installation.
11. Temporary pipe and fittings should be noted. Although not drawn, the information can be written out alongside the dimension lines providing the "date of work" information. With temporary pipe and fittings information provided on the field cards, they can be used to verify final payment quantities for all pipe related work.
12. Curb line stationing typically runs parallel to the curb line and water main. This may be referred to as a baseline that runs parallel to the curb line but is offset from it. A station on each joint should be recorded where necessary. A Station must be provided at all alignment changes (vertical and/or horizontal) and at all fittings (i.e. 3-way branches, 4W centerlines, offsets, caps, plugs, double hubs, sleeves, etc.) and appurtenances (i.e. valves, hydrants, etc.).

Pipeline stationing (along the centerline of the pipe - P.L.) is optional for payment purposes. You MUST distinguish between the two types of stationing by labeling pipeline stationing with the abbreviation - P.L.

13. A dimension line should be drawn approximately two boxes from the edge of the field card and parallel to the centerline of the pipe. On this line, the beginning and end of the day's work should be indicated and the date (date of work) inscribed. (This is not necessary on a job requiring only one card where the date at the top of the card is adequate).

14. Abandoned Mains - Indicate on the field card:

- The size of any replaced mains.
- Whether it was removed, or abandoned in place.
- If abandoned in place, indicate its location where possible.

15. Interference - Indicate all utility interferences and major utilities that may have affected pipe work and may be of future concern. The owner, size of facility, cover and station should be noted for utilities crossing the water main. All pipe and fitting installed for a utility interference should be identified (i.e. CE, ECS, TW, CV, etc.).

16. “Tie-Ins” - Existing to new pipe connections should always be referenced by measured distances from existing appurtenances or valves except where this is impossible.

17. Section Lines - These notations reference the next field card on which the water main installation work continues by referring to a label generated for a specific contract location (typically number/lettered sequence). DEP Mapping stamps each card with a unique number on a borough basis for cataloging purposes.

(B) Submission of Field Cards:

The Resident Engineer will submit copies of the field cards to the Borough’s Reviewer through the Engineer-in-charge. The Borough’s Reviewer will return the copies with comments and corrections in red. Once incorporated, the field cards are resubmitted together with the “marked” copy to the Borough’s Reviewer for a final check. If all is in order, the field cards are returned to Resident Engineer for transmittal to DEP and copying (three sets).

The Field Cards are to be transmitted to DEP by letter listing each field card. A receipt must be obtained from DEP’s Mapping Unit to prove submission.

The three copies of the Field Cards are to be distributed as follows:

- One copy will remain with the contract files along with a copy of the transmittal letter and the original receipt.
- The second copy will be forwarded to DDC’s Construction Support Unit (CSU) with a copy of the transmittal letter and a copy of the receipt.
- The third copy along with a copy of the transmittal letter and receipt is to be sent to be the Borough’s Reviewer concluding the submission process.

This process will eliminate practically all the errors in preparing Field Cards and improve consistency.

(C) Additional Considerations in Preparing Field Cards:

1. The Resident Engineer must review Inspector Reports in a timely manner to correct any reporting deficiencies that might impair preparation of Field Cards. This is especially a concern on REI consultant contracts where inspection personnel are very transient internally and between other companies. Old errors are hard to rectify without test pitting. It is a better practice to question early while the work is part of recent memory.

2. Although it is not a rule, it is good practice to use the grid on the card to establish a pipe diameter convention:

- Single box width / services 4-inches or smaller
- 2 box width / 6-inch pipe
- 3 box width / 8-inch pipe
- 4 box width / 12-inch pipe
- 5 box width / 20-inch pipe.

3. There is nothing wrong with using Visio or a PC-based CAD program to prepare field cards. However the time invested to become proficient in the software’s use may not be an economical investment to produce a small quantity of cards and the quantity may be insufficient to maintain a high skill level. There may be only one computer in the field office. There also may be one person possessing the skill that can bog down the process or halt it completely if the skilled individual is on vacation, reassigned or moves on. Everybody knows how to use a pencil and a straight edge. Everybody can pitch

in on a rainy day. The time invested when hand drawing a Field Card rapidly goes from practice to increasing accuracy in lieu of being caught up in the software nuances.

4. Laying out a line drawing prior to drawing a Field Card is good practice.
5. Using templates to prepare Field Cards is good practice. A pipe fitting template, a large circle template, a large ellipse template and a lettering template (if needed) are the most useful in drawing Field Cards.
6. Good examples can be emulated to expedite the process

II. TAP CARDS:

1) The Tap Card at a minimum but not limited to include the following information:
   - Block No and Lot No
   - Borough Name
   - Permit / Contract Number
   - Location / Address of the Premises
   - Work Type
   - Size, depth, and length of Tap connection
   - Location of the connection relative to the building being served (Distance from the projected building line crossing the water main to the connection point).
   - Station at the connection point
   - Size of the water main Tapped to
   - Piping material and service type
   - Plumber Name, License Number, and signature
   - Any additional comments or Remarks
   - Sworn Statement certifying that the information on the Tap card is correct.
   - Penalty/Warning stating Falsifying any statement made herein is an offence punishable by fine, imprisonment, or both (N.Y.C. Adm Code Sec 1151-0.0).

(8) At all locations where the Engineer determines that the existing subgrade material has an unsatisfactory soil bearing capacities, the Contractor must excavate below subgrade to the depth required to remove the unsatisfactory soil (maximum twenty-five (25) foot depth below subgrade), and must backfilled to subgrade with stone ballast as described in Section 70.71. Payment for this work must be made under:

Item No. 73.31AE1 - ADDITIONAL EARTH EXCAVATION INCLUDING TEST PITS (0’ TO 12’ DEPTH),

Item No. 73.31AE2 - ADDITIONAL EARTH EXCAVATION INCLUDING TEST PITS (OVER 12’ TO 16’ DEPTH),

Item No. 73.31AE3 - ADDITIONAL EARTH EXCAVATION INCLUDING TEST PITS (OVER 16’ TO 20’ DEPTH),

Item No. 73.31AE4 - ADDITIONAL EARTH EXCAVATION INCLUDING TEST PITS (OVER 20’ TO 24’ DEPTH),

Item No. 73.31AE5 - ADDITIONAL EARTH EXCAVATION INCLUDING TEST PITS (OVER 24’ DEPTH);

and Item No. 70.71SB - STONE BALLAST.

The cost for any additional sheeting and bracing required for excavating below subgrade must be deemed included in the price bid for Items:

Item No. 73.31AE1 - ADDITIONAL EARTH EXCAVATION INCLUDING TEST PITS (0’ TO 12’ DEPTH),

No. 73.31AE2 - ADDITIONAL EARTH EXCAVATION INCLUDING TEST PITS (OVER 12’ TO 16’

DEPTH),

Item No. 73.31AE3 - ADDITIONAL EARTH EXCAVATION INCLUDING TEST PITS (OVER 16' TO 20' DEPTH),

Item No. 73.31AE4 - ADDITIONAL EARTH EXCAVATION INCLUDING TEST PITS (OVER 20' TO 24' DEPTH),

Item No. 73.31AE5 - ADDITIONAL EARTH EXCAVATION INCLUDING TEST PITS (OVER 24' DEPTH).
The Sheeting design must be submitted to Department of Environmental Protection.

(9) For Specified Length (Spot Repair) Of Existing Catch Basin Connection Reconstruction Work Ordered Performed: The contract prices for Item No. 52.11D12C - 12" DUCTILE IRON PIPE BASIN CONNECTION (FOR CHUTE CONNECTION WORK ONLY),

Item No. 52.11V12- 12'' EXTRA STRENGTH VIRTIFIED PIPE BASIN CONNECTION,

Item No. 52.11V12C – 12'' EXTRA STRENGTH VITRIFIED PIPE BASIN CONNECTION (CHUTE CONNECTION WORK ONLY) must be the unit price bid per linear foot for each size and class of catch basin connection pipe constructed to all specified lengths (spot repair) and must cover the cost of all labor, materials, equipment, samples, tests and insurance required and necessary to construct the catch basin connections of the sizes and to the lines and grades shown, specified, or ordered, including the earth excavation of all materials of whatever nature encountered (See Section 40.03 - Earth Excavation); concrete cradles; crushed stone bedding and encasements; all sheeting and bracing; pumping; fluming; bridging; breaking down and filling in of abandoned catch basins and catch basin connections together with their foundations, including bulkheading at both ends; cored openings for connections to structures; connections; backfilling; cleaning up; support and maintenance of existing City structures that are encountered during excavation (including fences, copings, vaults, light poles, etc.), all in accordance with the plans, specifications (See Section 52.11) and standards and as directed by the Engineer.

(10) The Contractor must exercise extreme caution and take all necessary precautions in placing sheeting and excavating to prevent any damage to the existing NYC TRANSIT'S subway structures and its appurtenances during construction work throughout the project area. The Contractor must take full responsibility to protect the said NYC TRANSIT'S subway structures and its appurtenances and any damage caused by the Contractor's operations must be made good by the Contractor to the satisfaction of the Engineer at no additional cost to the City.

(11) The Contractor must submit shop drawings to NYC Transit Authority showing all the details and methods of construction, such as, sheeting and bracing, including the Contractor's procedure and sequence of construction, supporting and/or protection of the existing TA's structures and its appurtenances, with necessary design calculations for approval prior to starting of the construction. The design must be made by a New York State Licensed Professional Engineer skilled in this type of construction and as further evidenced by the imprint of Professional Engineer's seal and signature on all drawings. The cost of this work must be deemed included in the price bid for all items of work under this contract.

(12) The Contractor is hereby notified that a new scope of lead water service line replacement is added to the contract and all LSLR work must be in compliance with the new section SECTION **64.14 LEAD SERVICE LINE REPLACEMENT which is included herein SW Pages under Section C in subsection (9).**

Prior to the start of any water main work, the Contractor must perform lead service line investigation/survey and LSLR identification report of all water service connections encountered within the project limits and report to the Engineer. Information is also available in the DEP website: nyc.gov/leadpipe.

The Contractor is advised that the cost of Lead Service Line Replacement (LSLR) work, as per the specifications and as ordered by the Engineer, including investigation/survey, identification report, all materials, equipment and labor necessary to complete the work will be deemed included and paid under the bid items 64.14A, 64.14AL, 64.14AM, 64.14B, 64.14BL, 64.14BM, 64.14V, 4.02 AG,4.13 AAS, 4.13BAS, 4.2, and 6.27 A.
No separate payment will be made.

B. REVISIONS TO THE STANDARD HIGHWAY SPECIFICATIONS

(1) **Refer** to Standard Highway Specifications (May 16, 2022), Page 625:
Add the following new **Section 9.29**:

SECTION 9.29

ALLOWANCE FOR RAILROAD FACILITIES INCLUDING INSURANCE

AND FORCE ACCOUNT (ALL TYPES)

9.29.1. DESCRIPTION.

Under this item the Contractor must negotiate with the railroad to obtain a permit to enter railroad property, determine the scope and cost of flaggers/spotters and all associated railroad work, and submit a deposit to the railroad to cover the railroad's miscellaneous costs associated with this contract and all required insurances.

9.29.2. MATERIALS.

(Not applicable)

9.29.3. CONSTRUCTION DETAILS.

Prior to the Contractor providing any services under this Section, the Engineer will provide written direction to the Contractor. The written direction will include:

- The name and contact information of the railroad;
- Additional Insurance requirements;
- Special railroad requirements and provisions;
- Scope and area of work where railroad coordination is required.

When directed by the Engineer, the Contractor must negotiate with the railroad to obtain a permit to enter railroad property, comply with all relevant railroad requirements, and provide a payment fund to the railroad for all miscellaneous expenses incurred by the railroad due to the contractor entering the railroad property. These expenses include the costs incurred by the railroad to provide flaggers, spotters, engineering services (plan review/comments), accounting services (cost work-up and negotiations), construction inspection, or any other labor, material or equipment necessary to provide a safe environment to both the contractor and the railroad. The right-of-entry permit must be obtained prior to commencement of any work within the boundaries of the railroad. The railroad will not provide any services necessitated by the Contractor's operations until the permit is obtained.

This allowance must take care of all the railroad insurances as directed by the Engineer.

Prior to the Contractor making payment of any railroad invoices, the Contractor must submit the invoice to the Engineer for approval.

9.29.4. METHOD OF MEASUREMENT.

The fixed sum shown in the Bid Schedule for this item must be included in the total bid price; however, actual payment to the Contractor will be based on the actual invoices submitted by the Contractor in connection with the railroad works as described above.

9.29.5. BASIS OF PAYMENT.

The fixed sum must be considered the price bid for this item. The fixed sum is not to be altered in any manner by the bidder. Should the amount shown be altered, the new figures will be disregarded and the original price will be used to determine the total amount bid for the contract.

The fixed sum payment made under this item will be equal to the sum of all invoices submitted by the Contractor as proof of work performed for this item, as approved by the Engineer.

The "fixed sum" amount is included in the bid solely to ensure that sufficient monies will be available to pay the Contractor for this work, which may be more or less than the fixed sum amount.

The unit price will cover the cost of all labor, materials, equipment, insurance, and incidentals necessary to complete the work under this section in accordance with the Contract Drawings, the specifications and the directions of the Engineer.

Payment will be made under:

Item No.	Item	Pay Unit
9.29	ALLOWANCE FOR RAILROAD FACILITIES INCLUDING INSURANCE AND FORCE ACCOUNT (ALL TYPES)	F.S.

C. REVISIONS TO THE STANDARD SEWER AND WATER MAIN SPECIFICATIONS

(1) **Refer** to Contract Book, Volume 2 of 3, Standard Construction Contract, **Article 15 - Liquidated Damages:**
Delete this article in its entirety:
Substitute the following new **Article 15**:

ARTICLE 15 - LIQUIDATED DAMAGES

15.1 In the event the Contractor fails to complete the Initial Services, as set forth in **Division VIII**, **Section DSS-4 - Issuance of Work Orders**, within the Initial Response Time, as set forth in Paragraph 15.2 below, the Contractor must pay to the City the sum(s) set forth below, for each and every specified period of delay in completing the Initial Services. Due to the difficulty in accurately ascertaining the loss the City will suffer by reason of delay in completion of the Initial Services hereunder, the sum(s) set forth below are hereby fixed and agreed to as the liquidated damages that the City will suffer by reason of such delay, and not as a penalty. Liquidated damages will be assessed on a cumulative basis. This article must also apply to the Contractor if it is defaulted pursuant to CHAPTER X, Page-74 of STANDARD CONSTRUCTION CONTRACT, VOLUME 2 OF 3. Neither the failure to assess liquidated damages nor the granting of any time extension must operate as a waiver or release of any claim the City may have against the Contractor for either actual or liquidated damages.

Delay Beyond Initial Response Time	Amount of Liquidated Damages
(a) First one (1) hour period after Initial Response Time	$1,000
(b) First six (6) hour period after the end of the time frame set forth in (a)	$2,000
(c) Second and all subsequent six (6) hour periods after the end of the time frame set forth in (b)	$3,000

15.2 The Initial Response Time will mean the period of time within which the Contractor must complete the Initial Services set forth in **Division VIII, Section DSS-4 - Issuance of Work Orders**. The Initial Response Time must be specified in the Notice provided to the Contractor in accordance with such section. The Initial Response Time must commence at the time the Notice is transmitted to the Contractor by fax.

15.3 Liquidated damages received hereunder are not intended to be nor must they be treated as either a partial or full waiver or discharge of the City's right to indemnification, or the Contractor's obligation to indemnify the City, or to any other remedy provided for in this Contract or by Law.

15.4 The Commissioner may deduct and retain out of the monies which may become due hereunder, the amount of any such liquidated damages; and in case the amount which may become due hereunder must be less than the amount of liquidated damages suffered by the City, the Contractor must be liable to pay the difference.

(2) **Refer** to **Subsection 10.15 - Notice To Utility Companies, Etc., To Remove Structures Occupying Place Of Sewers, Water Mains Or Appurtenances**, Page19:
Add the following to **Subsection 10.15**:

(1) CONSOLIDATED EDISON COMPANY OF NEW YORK (CON EDISON)

There are CON EDISON facilities in the areas of reconstruction. The existing systems are comprised of underground ducts, service boxes, manholes, street lighting, utility poles, underground transformer vaults, etc. The Contractor must notify CON EDISON within the initial response time specified at time of notification of the work order at each ordered location by contacting Mr. Dennis Brady at (917) 608-3435.

(2) NATIONAL GRID

There are NATIONAL GRID facilities in the area of construction. The Contractor must notify NATIONAL GRID within the initial response time prior to the start of construction by contacting Mr. Neville Jacobs Jr. at (718) 963-5612.

(3) VERIZON

There are VERIZON facilities in the areas of reconstruction. The Contractor must notify VERIZON within the initial response time specified at time of notification of the work order at each ordered location by contacting Aubery Makhanlall at (516)758-3705.

(4) CHARTER SPECTRUM

There are CHARTER SPECTRUM facilities in the areas of reconstruction. The Contractor must notify CHARTER SPECTRUM within the initial response time specified at time of notification of the work order at each ordered location by contacting John Piazza, at (917)731-9089.

(5) ALTICE

There are ALTICE facilities in the areas of reconstruction. The Contractor must notify ALTICE within the initial response time specified at time of notification of the work order at each ordered location by contacting Al Clark, at (516)315-1754.

(3) **Refer** to Subsection 10.21 - Contractor To Notify City Departments, Page 21:
Add the following to **Subsection 10.21**:

(I) N.Y.C. D.E.P., BUREAU OF WATER AND SEWERS OPERATIONS

The Contractor must notify Mr. Peter Gordon, P.E., Linear Capital Program Management Division at the Department of Environmental Protection, at (718)-595-4347, 59-17 Junction Blvd., 3rd floor low rise, Corona N.Y. 11368, within the initial response time prior to the start of construction.

(II) NEW YORK CITY FIRE DEPARTMENT

The Contractor must notify the Bureau of Fire Communications within the initial response time prior to the start of construction by contacting Mr. Ed Durkin at (718) 281-3933 or (917) 769-1476.

(III) N.Y.C. DEPARTMENT OF TRANSPORTATION

The Contractor must notify Hasib Amini / Akmal Mikhail - Signal/Street Lighting Operations, 34-02 Queens Blvd., Long Island City, N.Y. 11101 at (212) 839-3386 / (212)-839-3368, within the initial response time prior to the start of construction.

(IV) N.Y.C. DEPARTMENT OF PARKS AND RECREATION

The Contractor must notify the Parks Department within the initial response time prior to the start of construction by contacting Mr. Daniel Grulich at (718)760-6927.

(V) N.Y.C. TRANSIT AUTHORITY

(a) The Contractor is advised that bus routes as well as bus stops, within the scope of this project may be affected during construction operations. The Contractor must notify the Transit Authority within the initial response time prior to the start of construction, in order to make the necessary arrangements as required under the NYC TRANSIT GENERAL NOTES included in **Section 10.25, paragraph (A)**.

Arrangements must be made through:

Hillary Cardoza Cato
Director MTA-NYCT & MTA Bus, Bus Service Planning
2 Broadway, 17th Floor
New York, N.Y. 10004
Hillary.cardoza-cato@nyct.com
(646) 252-5643 O (347)539-1367 M

(4) **Refer** to Subsection 10.24, DAMAGED WATER SERVICE PIPES TO BE REPAIRED BY A LICENSED PLUMBER Page 22:
Add the following to Subsection 10.24:

If the damaged or cut water service pipe is lead, galvanized steel, or galvanized iron, the service pipe must not be partially replaced, but fully replaced from the main to the house control valve. If the service pipe was damaged, cut, or otherwise interrupted due to the Contractor's actions or means & methods (including selection of shoring systems), the water service pipe will be replaced at the Contractor's own cost.

(5) Refer to **Subsection 10.25 - Contractor To Carry Out Agreement Between City And Railroad Company Or Property Owner(s)**, Page 22:
Add the following to **Subsection 10.25**:

(A) NYC TRANSIT GENERAL NOTES

(1) The NYC Transit (NYCT) reserves the right to place inspectors, flagmen or other personnel in the subway structures during construction of the project linked by a telephone system, if deemed necessary, to observe the effects of the construction on the transit facilities. It is expected that such personnel will be necessary when the construction comes within twenty-five (25) feet of the subway structure. However, NYCT further reserves the right to place such personnel whenever, in its opinion, the project conditions warrant such placement, regardless of distance. The cost of such personnel, telephone installation and any re-routes, diversions of service, work trains, etc., made necessary by the project, will be paid for directly to the Transit Authority by the City, at no cost to the Contractor.

(2) All rock excavation adjacent to the transit structure is to be channel drilled two (2) feet below subgrade.

(3) If top of rock is found below subway structure, the subway structure must be underpinned in accordance with drawings to be submitted to NYCT for approval.

(4) If rock is soft or seamy, lateral supports must be provided below the subway structure in accordance with drawings to be submitted to NYCT for approval.

(5) Blasting will be permitted only with light charges subject to the approval of NYCT's Engineer and in accordance with the regulations of the Fire Department. The Contractor must provide a detailed monitoring plan, providing for measurements of both particle velocity and displacements at critical locations of the NYCT structure. The monitoring plan must include threshold and upset levels of both particle velocity and settlement together with an action plan for their implementation. The Contractor must secure an approved seismologist to install and operate suitable velocity gauges to continuously monitor particle velocity and an independent licensed surveyor to monitor displacements. The threshold maximum particle velocity above ambient caused by the blasting will be 0.5 inch per second. Values exceeding this level will be reviewed and evaluated by NYCT's Engineer. In no case will particle velocities exceed the upset level of 2.0 inches per second.

(6) Before placing concrete, the subgrade of the foundations in the vicinity of the subway structure is to be inspected and approved by NYCT's Engineer.

(7) If any portion of the subway structure or finish is damaged as a result of the Contractor's operations, it must be repaired or replaced with the same materials in place, subject to the approval of NYCT's Engineer and at the Contractor's own expense.

(8) Excavation embankments are to be shored and braced. Drawings indicating a suggested method of construction are to be submitted to NYCT for approval in conjunction with the project's contract drawings. In case of excavation undermining the subway structure, underpinning may be required. Drawings for underpinning are to be submitted to NYCT for approval.

(9) Temporary shoring may be placed in direct contact with NYCT structures only if the NYCT structure is shown to be able to support all anticipated loads that can be transferred through the temporary structures without damaging the existing structure. At the completion of the project, these temporary shoring and bracing systems are to be removed or cut-off as approved by NYCT.

(10) When piles are to be driven adjacent to the subway structure, boring data, pile layouts, specifications and installation procedures are to be submitted to NYCT for approval. Velocity meters are to be installed in the subway tunnel at critical locations to monitor induced vibrations. Induced displacements along the tunnel structure and track invert are to be monitored during driving. The threshold maximum particle velocity above ambient caused by the driving will be 0.5 inch per second. Values exceeding this level will be reviewed and evaluated by NYCT's Engineer. In no case will particle velocities exceed the upset level of 2.0 inches per second.

(11) No piles are permitted to be installed by any method within three (3) feet of subway structure measured from the edge of the pile or casing to the wall. Closed-end piles will not be permitted to be driven within ten (10) feet of the subway structure.

(12) All piles are to be placed within a preaugered cased hole to the influence line. The casing must be cleaned without disturbing the soil outside the casing and the pile placed within the casing for installation. The piles may then be driven beyond the influence line within the casing.

(13) The influence line must start at the bottom of the subway structure and sidewall and extend at a 1:1 slope. For piles installed within ten (10) feet of the subway structure the casing must be extended up to the bottom of the subway structure.

(14) At the completion of pile installation, the space between the pile and the casing is to be filled with either clean sand or grout. If the casing is to be removed, the filling must be completed prior to removal of the casing.

(15) All piles are to be driven a minimum of ten (10) feet below the intersection of the pile centerline and the influence line of the subway structure.

(16) The use of "down-the-hole-hammers" for installation of piles through overburden and fill will be permitted only to remove boulders. It will not be permitted as a matter of course to advance the hole. Their use to construct rock sockets will not be allowed within five (5) feet of the NYCT structure.

(17) Vibratory hammers will not be permitted within seventy-five (75) feet of subway structures. Hoerams will not be permitted within twenty-five (25) feet of subway structures.

(18) Dynamic compaction methods using dropped heavy weights cannot be conducted within one thousand (1,000) feet of any NYCT structure unless it is shown that induced settlements and vibrations will not damage these structures. A suitable monitoring plan including settlement and vibration measurements must be approved by NYCT's Engineer for all such operations within these distances.

(19) There must be no machine excavation within three (3) feet of NYCT structures, power duct lines, or any other facilities until they have been carefully exposed by hand excavation.

(20) All dewatering operations conducted within five hundred (500) feet of the NYCT structure must be performed in accordance with drawings and procedures submitted to NYCT for approval. The distance from the structure to the dewatering operation can be reduced provided that soil conditions at the site indicate that the radius of influence of the dewatering is less than five hundred (500) feet. For dewatering within the radius of influence, the dewatering program must be shown to have negligible influence on settlements of the NYCT structure.

(21) Subway entrances (ventilators, etc.) are to be underpinned or shored and braced if directed by NYCT's Engineer.

(22) NYCT, at its discretion, reserves the right to require the project to close or maintain and protect existing subway entrances, ventilators, etc. adjacent to the project during construction. Such construction may include underpinning, shoring, bracing and erection of suitable barricades and/or canopies and shields. Such protection must be in accordance with drawings submitted to NYCT for approval.

(23) If shields are to be installed to protect NYCT facilities and/or the public, plans showing the location, type and method of attachment to the transit structure must be submitted to NYCT for approval.

(24) All lumber and plywood used for protection of subway facilities must be fire retardant.

(25) Subway emergency exits must be kept clear at all times.

(26) In excavation over or near the subway roof, special care must be exercised so that the thin concrete protection of the subway waterproofing is not damaged.

(27) Burning of, welding to or drilling through existing steel structures will not be permitted except as shown on drawings approved by NYCT.

(28) Horizontal and vertical control survey data of the existing NYCT structure is to be taken by a Licensed Land Surveyor to monitor any movements that occur during construction and to show that the induced movements are within allowables provided and approved by NYCT's Engineer. If any movements exceed allowables, remediation as approved by NYCT must be performed.

(29) Bus routes affected by the project will or may require bus diversions.

When impacting any bus stop, Special Operations must be notified two (2) weeks in advance.

(30) Duct lines must be maintained and protected during construction. Any interference with duct lines should be reported to NYCT inspector. When a duct line containing cables is to be removed, or when masonry adjacent thereto is to be removed, penetrated, or drilled, the work must be done with hand labor entirely, using hammer and chisel. Jackhammers, bull points or other power equipment must not be used.

(31) Where manholes are encountered:

(a) They must be protected and raised or lowered as required, to match the new street grade.
(b) If manhole covers are raised or lowered, protect cables in manhole by wood sheeting of two (6) inches nominal thickness.
(c) Prior to the start of construction operations affecting manholes and duct lines, seven (7) days notice must be given to Mr. John Malvasio, P.E., Director, Department of Maintenance-Of-Way, at (718) 694-1358.

(32) Construction work done near vent gratings and hatches must be as follows:
(a) Unless approved by the NYCT's Engineer, all vent gratings and hatches should remain outside the construction site, separated by a construction fence. Protective shields must be provided over vent gratings as required by NYCT's Engineer.
(b) No building material, vehicles or construction equipment is to be stored or run over vent, gratings, hatches or emergency exits.
(c) Details of sidewalk reconstruction around vent gratings, hatches and emergency exists are to be submitted to NYCT for approval.

(33) Tractors, cranes, excavators, etc. used in the vicinity of the elevated structures must be isolated from the ground. Since the elevated structure is used as a negative return path, with a consequent potential between it and the ground, any contact between the structure and grounded equipment could result in burning of the steel.

(34) Temporary construction sheds, barricades or plywood partitions must be a minimum of five (5) feet from edge of finished platform.

(35) Station Areas or Stairway/Entrance closings: The general requirements for Station Areas or Stairway/Entrance closings are as follows:

(a) Only one (1) stairway at each station will be permitted to be closed at the same time. Approvals for closing any stairway must be obtained from the Division of Station Operations at least three (7) weeks in advance.
(b) Mr. Ashok Patel, Director, Office of Station Programs; Telephone (718) 694-1695 of the Division of Stations must be notified one (1) week prior to the actual closing and reopening of the entrance.
(c) Ample signage must be supplied and posted at least one (1) week in advance, advising the public of the proposed subway stair closing.
(d) The street entrance stairway should not be closed unless manpower and materials are available to commence work on dates permitted.
(e) Once the closing is effected construction signs must be placed at appropriate locations on the barricades at the street and mezzanine levels, stating the Contractor's name, 24-hour emergency telephone number, contract number, the duration of the closing, direction to an alternate entrance/exit, and an apology for the inconvenience to our customers.
(f) Existing station signage must be adjusted to reflect any changes in access/egress.
(g) Barricades are to be painted and kept graffiti free at all times. The Contractor must maintain the barricaded area clean of all debris.
(h) All materials are to be properly stored and secured away from passenger traffic.
(i) The Contractor must remove all waste material and barricades from all station areas when construction is completed.
(j) Inspection of the area under construction by authorized Station Department employees must not be inhibited.
(k) If street lights on the sidewalks are affected, temporary lights must be provided.

(36) If new concrete construction is joined to existing concrete, dowels and keyways are to be used in accordance with NYCT Standards.

(37) If the project involves construction or alteration of a subway facility on private property, the property owners will be required to enter into an agreement with NYCT pertaining to all work affecting the transit facilities and clearly defining limits and responsibility for maintenance and liability.

(38) Wherever a new sidewalk is being placed adjacent to NYCT structures the following will be required:

(a) The top of the new sidewalk must be flush with the subway vent gratings, hatches and emergency exits.
(b) The slope of the new sidewalk must be such that the drainage be away from these structures.
(c) A one-half (1/2) inch premolded filler must be installed between the new sidewalk and NYCT structure.
(d) Where sidewalk elevations are being changed details of proposed work around NYCT structures are to be submitted for approval.

(39) Before the start of any work, the Contractor must make an examination, in the presence of NYCT's Engineer, of the interior and exterior of NYCT subway or other structure adjacent to the proposed work. The person or persons authorized by the Contractor to make these examinations must be approved by the Engineer. The Contractor must take all photographs as may be necessary or ordered to indicate the existing condition of NYCT structure. One (1) copy of each photograph, eight (8) inches by ten (10) inches in size, and the negative is to be submitted to Mr. John Malvasio, P.E., Director, Department of Maintenance-Of-Way, 130 Livingston Street, Room 8044D, Brooklyn, New York 11201, Telephone (718) 694-1358 before the start of construction.

(40) All architectural details (token booths, railings, doors, etc.) are to conform to the latest NYCT Standards. These standards are available at NYCT.

(41) Standard NYCT insurance clauses are to be made part of the Project's contract drawings. Proof that the necessary insurance is in effect will be required before work can commence.

(42) At the close of any project involving construction or alterations to transit facilities, one (1) set of vellums or mylars, five (5) sets of 35mm microfilm, and electronic copies complying to microstation.dgn format of "approved as-builts" must be provided to NYCT for its records. For details of specific requirements contact NYCT Outside Projects.

(43) At least seven (7) working days prior to the start of construction operations, notification must be given to Mr. John Malvasio, P.E., Director, Department of Maintenance-Of-Way, at (718) 694- 1358. The Contractor must provide temporary quarters near the job site for NYCT inspectors containing a desk and telephone.

(6) **Refer** to **Subsection 10.30 - Contractor To Provide For Traffic**, Page 24:
Add the following to **Subsection 10.30**:

(1) Traffic Stipulations:

The Contractor must obtain all permits and traffic requirements from the Office of Construction Mitigation and Coordination (OCMC) prior to the start of work at any ordered location. The Contractors must contact Duane Barra at (212)839-9630 or Nicolas Dagher at 212-839-9637, NYC Department of Transportation, Division of Engineering Control, 55 Water Street, 7th Floor, New York, NY 10041.

(7) **Refer** to **Section 40.06 - Backfilling**, Page 194:
Delete from this section, **Subsection 40.06.2(D) - CLEAN FILL** in its entirety:
Substitute the following new **Subsection 40.06.2(D)**:

CLEAN FILL

(1) Clean fill material for this contract must be select granular fill ordered in writing by the Engineer where there is a deficiency of acceptable backfill. Select granular fill material will be required in order to fill voids in the trenches and excavations, (For Sewers Trenches - from a point not less than two (2) feet above the top of sewers to the underside of the pavement as it existed at the start of the work; and, For Water Main Trenches - from a point not less than twelve (12) inches above the top of the barrel of the water main pipe to the underside of the pavement as it existed at the start of the work), caused by the removal of boulders, unsuitable backfill materials, existing sewers and associated sewer structures, and any other underground facilities or structures, and must be approved clean earth or sand of low silt and clay content (less than eight (8) percent passing No. 200 sieve), free from bricks, blocks, excavated pavement materials and debris, stumps, roots and other organic matter, as well as ashes, oil and other perishable or foreign matter and must not contain particles larger than one quarter (1/4) inch in diameter.

(2) This backfill must be exclusive of the normal backfill required in the trenches and excavations for proposed sewers and associated sewer structures for which payment is included therein. Payment must be made in accordance with **Subsection 40.06.6**.

(8) **Refer** to **Section 40.06 - Backfilling,** Page 194:
Delete from this section, paragraphs (B) of **Subsection 40.06.6 - Deficiency Of Backfill Material** in their entirety:
Substitute the following new paragraphs:

(B) For providing acceptable select granular fill material (whether natural or processed) to satisfy the requirements of **Subsection 40.06.2(D)**:

(1) To fill voids left by the removal of ledge rock payment must be included in price bid under the contract item(s) labeled “ROCK EXCAVATION”. The Contractor attention is directed to **Section 70.61 – Rock Excavation** of the specifications and that all references to clean fill therein, will mean select granular fill.

(2) To fill voids left by removal of non-contaminated and non-hazardous excavated material deemed not suitable for backfill and which requires replacement with clean backfill, payment will made under Item No. 73.41AG - ADDITIONAL SELECT GRANULAR BACKFILL. The Contractor’s attention is directed to **Section 73.41 - Additional Select Granular Backfill** of the specifications, with the addition that the conditions for use as specified in **Subsection 73.41.1** must be expanded to include those specified in **Subsection 40.06.2(D)** as amended above.

(3) To fill voids left by removal of non-contaminated and non-hazardous material that does not have a satisfactory Beneficial Use Determination (BUD) per NYSDEC Part 360.12, payment will made under Item No. 73.41AG - ADDITIONAL SELECT GRANULAR BACKFILL. The Contractor’s attention is directed to **Section 73.41 - Additional Select Granular Backfill** of the specifications, with the addition that the conditions for use as specified in **Subsection 73.41.1** must be expanded to include those specified in **Subsection 40.06.2(D)** as amended above.

(4) To fill voids left by removal of contaminated and/or hazardous material, payment will be made under Item No. 73.41AG - ADDITIONAL SELECT GRANULAR BACKFILL. The Contractor’s attention is directed to **Section 73.41 - Additional Select Granular Backfill** of the specifications, with the addition that the conditions for use as specified in **Subsection 73.41.1** must be expanded to include those specified in **Subsection 40.06.2(D)** as amended above.

(9) Add the following new SECTION 64.14

Section 64.14 Lead Service Line Replacement

64.14.1. INTENT

(A) Description

This section describes the work to be performed when a lead house service line must be replaced.

Replacing a lead service line includes replacing the entire service line between the corporation stop at the water main and the meter inside the building. Partial replacements or repairs of lead service lines are not allowed, per the Rules of the City of New York ("RCNY") Title 15, Chapter 20, Section 20-03(s). See Section 64.14.1 (D), below.

A partial lead service line (i.e., a lead service line that was previously extended or repaired) will be treated as a lead service line for the purposes of this Section.

All Work must conform to the requirements of RCNY Title 15, Chapter 20. If a conflict exists between these specifications and Title 15, Chapter 20 of the RCNY, Title 15 Chapter 20 of the RCNY will take precedence.

(B) Responsibility

Replacing a lead house service line will be:

1. The responsibility of the Contractor, and performed at the Contractor's sole expense, when:
   a. The Contractor has damaged the lead service line.
   b. The lead service line is cut or damaged due to the Contractor's means and methods.
2. The responsibility of the property owner, and performed by a contractor retained by the property owner at the property owner's sole expense when:
   a. Upon careful excavation, the service line is found to be already damaged or leaking.
3. The responsibility of the City, and performed by the Contractor at the City's expense, as paid for under bid items **64.14A, 64.14AL, 64.14AM, 64.14B, 64.14BL, 64.14BM,** and / or **64.14V** when:
   a. The service line is in good condition and must be relocated or modified in order to construct a City owned utility, structure, or Green Infrastructure asset.

The final determination of responsibility for each service line to be replaced will be made by the Commissioner, in consultation with NYCDEP.

If a service line is required to be replaced at the Contractor's sole expense, the requirements of this Section must be followed.

(C) Outreach and property owner coordination

If a service line is required to be replaced at the Contractor's sole expense, the Contractor is responsible for all outreach and property owner coordination.

If a service line is required to be replaced at the property owner's sole expense, the Engineer, in consultation with NYCDEP, will provide the DEP 3-day water notice to the property owner.

If a service line is required to be replaced at the City's sole expense, the outreach will be as follows:

1. The Engineer will perform the initial outreach to the property owner and distribute the water filters provided in accordance with **Section 64.14.3.(O)**.
2. The Engineer, in consultation with NYCDEP, will obtain a written consent agreement from the property owner to:
   a. Have their service line replaced at the City's expense;
   b. Allow the Contractor access to perform the service line replacement; and
   c. Accept the restoration provided by the City under **Section 64.14.3.(N)**.

The Contractor must not commence any service line restoration until and unless a written consent is obtained from the property owner by the Engineer.

(D) Partial replacement of lead service lines

Lead service lines will be partially replaced in the following conditions:

1. The service line is required to be replaced at the City's sole expense, but the property owner does not provide the required agreement per **Section 64.14.1.(C).2** above;
2. Removal of encumbrances would prevent access to the building (i.e., require the removal of stoops) or cause a building code violation; or
3. The Engineer deems the extent of encumbrances to be excessive.

Where a lead service line is to be partially replaced, the Contractor will install a new curb valve and appurtenances per Section **64.14.3.(D)** below and replace the service line between the main and the curb valve. The replaced service line will be paid for under the appropriate items from **Sections 64.11** and **64.12**. The cost of installing the new curb valve and appurtenances must be included in the prices bid for the appropriate items from **Sections 64.11** and **64.12**.

For the purpose of providing water filter cartridges per **Section 64.14.2.(G)** below, a partial replacement, will be considered "fully replaced" upon completion of the partial replacement inclusive of the installation of the curb valve.

64.14.2. MATERIALS

(A) All service pipe, insulation, and jacketing must be in accordance with **Section 25.01,** modified as follows: Only new materials must be used for installation of service pipes. New service pipes of two (2) inches in diameter or less must be Type K copper tubing. Lead service pipes larger than two (2) inches in diameter are not anticipated in this Contract. Materials for service pipes and fittings must be in accordance with Section PC605, Chapter 6 of the New York City Plumbing Code, latest version.

(B) Backfill must be in accordance with **Section 40.06**.

(C) Sawcutting must be in accordance with of **Section 71.11**.

(D) Temporary restoration of streets, sidewalks, and curbs must be in accordance with **Section 71.31**.

(E) Permanent restoration of streets, sidewalks, and curbs must be in accordance with **Section 71.41**.

(F) Permanent restoration of pavements on private property must be in accordance with **Section 71.41**.

(G) Water filters: The water filter must include a water pitcher and an adequate supply of matching filter cartridges. The water pitcher must be a 7 cup standard PUR pitcher filter system as manufactured by KAZ, Inc. Filter cartridges must be supplied at no separate cost to cover the duration from distribution of the pitcher to the property owner for six months after the service line is fully replaced. Filters must be certified by the Water Quality Association (WQA) to remove 99% of lead in the water.

64.14.3. METHODS

(A) Service Line Details

1. Service lines less than one (1") inch will be replaced with one (1") inch service lines. Service lines one (1") inch and greater will be replaced with the same size service line.
2. Each new water service pipe must be laid in a straight line at right angle to the street main and extending from the tap to the main building control valve. Where surface or subsurface conditions make it impracticable to install a service pipe in accordance with the above conditions, it may be otherwise laid in an alternate location, provided the Contractor submits

a plan showing the proposed alternative location of the water service pipe, and obtains the prior written approval of the Engineer as well as any and all applicable permits.

3. Unless otherwise authorized by the Engineer in writing, each copper tubing service must have at least three (3) feet of copper tubing formed in a gooseneck connection to the tap and laid to the right hand, facing the tap. Each copper pipe with threaded joints must have, at the tap or wet connection, an offset swing joint consisting of four (4) elbows and three (3) pieces of pipe, each piece of pipe not less than two (2) feet in length, laid to the right side facing the connection. Connections to the City main by ductile iron or cast iron must be made directly; no offset swing joint is permitted.

4. Where buildings are constructed on pile foundations or other unyielding supports, the copper tubing service must have two (2) goosenecks, and the copper pipe with threaded joints must have two (2) offset swing joints, one at the tap or the wet connection, laid to the right side facing the main, and one immediately outside the building, laid to the right side facing the building, with a sleeve to carry the service through the foundation wall.

5. All water service pipes must be installed and maintained at a depth of at least three and one-half (3½) feet and no more than six (6) feet below ground unless written permission to vary this requirement is obtained from the Engineer. Where a water service pipe has less than three and one-half (3½) feet of cover, due to subsurface conditions, it must be insulated and protected and possibly plated, as required, in a manner approved by the Engineer. No water service pipes will be allowed at a depth of 30” or less.

6. A water service pipe must not be laid within six (6) inches of any other subsurface structure, conduit or pipe, nor directly below and parallel with any subsurface structure, conduit or pipe.

7. All surfaces to be insulated must be cleaned of all scale, rust, oil, and foreign matter and must be dry and free of frost prior to and during application of insulation. All testing of piping to be insulated must be completed prior to the application of any insulation materials. All insulation and accessory materials must be stored in an area that is dry and protected from weather before and during insulation application. Insulation must be applied based on the approved manufacturer's requirements and as approved by the Engineer.

8. If a house ground connection is attached to the existing service line, it must be reconnected to the new service line at no additional cost.

(B) Installation

1. Water service pipe laid in a sewer or construction trench must be protected from settlement by supports or by securely benching the service in the side earth wall where applicable, while maintaining minimum distance requirements from sewer pipe.

2. After a tap has been inserted or service pipe installed, the backfill around and one (1) foot over the main and service must be Select Granular Fill and carefully tamped under and around the main and service line. The remainder of the backfill must be Approved Excavated Suitable Fill and must be satisfactorily compacted either by tamping or flushing, or both. Where trenchless technology (tunneling) has been permitted the backfill of the tunnel portion must be well compacted with Select Granular Fill. Tunneling is the preferred method and should be used where practical to avoid disturbing encumbrances.

3. If removal of encumbrances is necessary, the removal will be paid for under item 6.27A, DEMOLITION OF STRUCTURES. Prior written approval of the Engineer is required.

(C) Disconnect and Reconnecting Service Connections

The Contractor must disconnect existing lead service lines and reconnect new copper pipe at the City water main for all water service lines which are required to be replaced.

1. In all instances, where lead water service lines are to be replaced, the Contractor must excavate at the water main, disconnect the supply at the existing tap, and continue with replacement of the lead service line.

2. New taps may be required to be installed prior to the installation of the water service line. The Engineer must determine if an existing tap must be replaced. The Contractor must expose the existing tap and provide the Engineer the opportunity to inspect the tap and make such determination. Any and all costs associated with the installation of new taps, including but not limited to coordination and accommodation efforts, is deemed included in the unit items herein and no additional payment will be made to the Contractor.

(D) Curb Valves

1. All new water service lines must have new curb valves installed with iron extension boxes, unless directed by the Engineer.

2. Curb valves must be full port ball valves or non-rising stem gate valves designed for a minimum of 150 psi of working pressure.

3. All curb valves must be set in the sidewalk area and located 18" (eighteen) inches inside the face of the curb. Any variance from this requirement must be submitted in writing to, and approved in writing by, the Engineer.

4. Curb valves must be provided with a tar coated iron extension box with a cover which must be installed flush with the sidewalk within ¼ inches. Curb valves 2 inches and smaller may be full port ball valves equipped with a quarter turn shutoff.

(E) Building Control Valves

1. Where possible, existing building control valves must remain. If directed by the Engineer or if a building control valve is not present, a new building control valve must be installed. Removal and disposal of deteriorated valves or valves that contain lead will be incidental to installation of new building control valves. Building control valves must be made of material similar to the water service pipes and must be gate type except that valves between ¾" and 2" may be full port ball valves. Lead content of valves must not exceed 0.25%.

2. Building control valves must be placed on the water service pipe within 2' of the building wall and located where they will be accessible at all times. Valves must be designed for a 150 psi minimum working pressure. For combined service pipes 2 inches or smaller, the building control valve may be an OS&Y valve or UL/FM-approved full-port ball valve approved by the New York City Department of Buildings.

(F) Building Penetration

1. Where required, existing sleeves must be removed and new sleeves must be installed and grouted to properly seal the building penetration. Additional building penetrations should be avoided when possible. The sleeves to be used must be ductile iron. The cost for sleeves will be deemed included in the costs of all scheduled items.

2. If the existing service is cast into the wall without a removable sleeve, the Contractor must drill accordingly to allow for the installation of a sleeve. If the sleeve is non-removable, in good condition, and can be properly sealed, the Contractor must reuse the existing penetration, subject to the Engineer's approval. Core holes must be centered over the existing service pipe. The Contractor must take all necessary precautions to prevent coring water from collecting inside the building and to prevent damage to property in the building.

(G) Test of Service Pipe

Each new water service line must be subjected to a water test under the street main pressure by the Licensed Master Plumber in the presence of the Engineer. All pipes and appurtenances must remain uncovered for the duration of the test and must show no sign of leakage.

(H) Flushing of Service Lines

The Contractor must perform flushing in accordance with AWWA C810, Section 4.4.1. The cost for all flushing will be deemed included in the costs of all scheduled items.

(I) Water Main Shutdowns

The work under this item must be performed in strict accordance with RCNY, Title 15, Chapter 20, and as directed by the Engineer. If it is necessary to shut off the water main while repairing, replacing, or installing a service pipe, the Licensed Master Plumber must immediately notify the Engineer. No separate payment will be made for water main shutdowns that are needed by the Contractor; payment will be deemed included in the individual bid items.

(J) Dewatering

The work under this item requires installation, maintenance, operation, deconstruction, and removal of dewatering equipment to adequately lower the groundwater table to a point below the trench subgrade. Dewatering will be required at all ordered locations where groundwater is present in the trench, or as directed by the Engineer. The work must be performed in strict accordance with the Standard Water Main Specifications, NYCDOT Standard Highway Specifications, and as directed by the Engineer. There will be no separate payment for the installation, maintenance, operation, deconstruction, or removal of any dewatering equipment; payment will be deemed included in the individual bid items.

(K) Extended Work Hours

The Contractor must schedule corporation stop (tap) and wet connection inspections only during regular business hours, unless approved by the Engineer. All work performed during extended work hours and any work done on holidays or on weekends, must be performed in strict accordance with the NYCDOT permits, and as directed by the Engineer. Work performed during extended hours will not be paid for separately; payment will be deemed included in bid items.

(L) Time is of the Essence

Construction of building service lines must be completed promptly and without delay in order to minimize the impact on property owners. All service lines should be disconnected and reconnected (brought back on-line) on the same day of installation and no later than 6 pm. However, in no event will building service lines be disconnected for a duration greater than 24 hours. This may require the service line replacement to be done in a two-step process (main to curb valve, curb valve to meter) in order to minimize the impact on property owners, at no separate cost. If service line replacement is done as a two-step process, the overall time must not exceed six months.

(M) Final Cleanup

All pipes and valves removed during the Work will become the property of the Contractor. Lead pipes must be disposed of by the Contractor in full compliance with federal, state, and local environmental rules, policies, and regulations, and as approved by the Engineer. Project site must be left in a neat and clean condition. All tools, equipment, materials, debris, scrap, trash, etc. must be removed at the end of the work day and upon completion of the Work.

(N) Restoration

1. Restoration in roadways, curbs, and sidewalks

   Restoration of roadways, curbs, and sidewalks will be in kind to match existing, and will be paid for under the appropriate bid item, as described in **Section 71.41**.

2. Restoration on private property

   All excavations within the building line, except asphalt and concrete pavements, must be backfilled with the excavated material and levelled smoothly to the adjacent ground, and these costs must be included in the prices bid for replacement of service lines. The Contractor will not be responsible for removal or replacement of encumbrances on service line replacements paid for by the City.
   Encumbrances are the property owner's property that interfere with the lead water service line replacement and may include:
   a. Stoops, retaining walls, railings, decks, porches, fountains, statuary, or other structures other than sidewalks, driveways, or pavements;
   b. Shrubs, trees, or landscaping other than turf; and
   c. Walls, panels or finishes inside the building.

   Restoration on private property will be limited to installing new asphalt and concrete pavements, subject to approval by the property owner. If the property owner does not agree to the restoration below, no additional restoration will be provided. The following are the only items available for restoration on private property:
   a. Item 4.02 AG, ASPHALTIC CONCRETE WEARING COURSE, 3" THICK, S.Y.
   b. Item 4.13 AAS, 4" CONCRETE SIDEWALK, S.F.
   c. Item 4.13 BAS, 7" CONCRETE SIDEWALK, S.F.
   d. Item 4.20 SEEDING, S.Y.

(O) Water Filters and Test Kits

For every lead service line encountered, the Contractor must:

1. Submit a Lead Test request through NYC 311. NYCDEP will directly supply lead test kits to the property owner.
2. Provide a water filter meeting the requirements of **64.14.2.(G)** to the Engineer, who will distribute to the property owner immediately following lead service line replacement. The Contractor will not be paid separately for water filters; the costs of these items must be included with the prices bid for all items.

64.14.4. MEASUREMENT

(A) The quantities of REPLACEMENT OF SERVICE LINE UP TO 1 IN, UP TO 40 FT and REPLACEMENT OF SERVICE LINE 1-1/4 TO 2 IN, UP TO 40 FT to be measured for payment will be the actual number of service lines replaced.

(B) The quantities of ADDITIONAL LENGTH OF SERVICE LINE UP TO 1 IN BEYOND

40 FT and ADDITIONAL LENGTH OF SERVICE LINE 1 -1/4 TO 2 IN BEYOND 40 FT to be measured for payment will be the additional length, measured in linear feet, of service line beyond 40 feet measuring as the distance of a straight line from the centerlines of the water main to the meter or building main control valve, whichever is encountered first. Any quantity beyond the straight-line distance will require prior written approval by Engineer.

(C) The quantities of REPLACEMENT OF SERVICE LINE UP TO 1 IN BETWEEN BUILDING CONTROL VALVE AND METER and REPLACEMENT OF SERVICE LINE 1-1/4 TO 2 IN, BETWEEN BUILDING CONTROL VALVE AND METER to be measured for payment will be the actual length of service lines replaced between the building control valve and meter.

(D) The quantities of INSTALL NEW BUILDING CONTROL VALVE 2 IN AND UNDER to be measured for payment will be the actual number of building control valves replaced.

64.14.5. PRICE TO COVER

(A) The price bid for REPLACEMENT OF SERVICE LINE UP TO 1 IN, UP TO 40 FT, ADDITIONAL LENGTH OF SERVICE LINE UP TO 1 IN BEYOND 40 FT,

REPLACEMENT OF SERVICE LINE 1-1/4 TO 2 IN, UP TO 40 FT, and ADDITIONAL LENGTH OF SERVICE LINE 1 -1/4 TO 2 IN BEYOND 40 FT must be a unit price bid per each service line replaced, and must include the cost of all labor, materials, plant, equipment, and insurance required to complete the Work as specified, including but not limited to: obtaining permits, scheduling appointments, performing site visits, providing notification, mobilization, sawcutting, excavation work disconnection and reconnection of service at main, sheeting, removal and disposal of existing service lines (inclusive of any salvage value), curb valves and curb valve boxes, removal or destruction of existing tap, installation of new taps, installation of gooseneck and offset swing joint, installation of new curb valve, coring and installing seal for building penetration, excavation of all materials of whatever nature encountered, restoration of private property, permanent restoration of street, curb and sidewalks including pigmented concrete as required, cleaning up, hauling away of all materials, removal of all debris and water incidental to connecting the water service line to the building control valve, inspection and testing, flushing, and buried insulation of water service lines due to insufficient depth, and demobilization together with all other items necessary to complete the Work.

(B) The price bid for REPLACEMENT OF SERVICE LINE UP TO 1 IN BETWEEN BUILDING CONTROL VALVE AND METER and REPLACEMENT OF SERVICE LINE 1-1/4 TO 2 IN, BETWEEN BUILDING CONTROL VALVE AND METER must be a unit price bid per linear foot, and must include the cost of all labor, materials, plant, equipment, and insurance required to complete the Work as specified, including but not limited to the meter setter, couplings, and other fittings; cleaning up; hauling away of all materials; together with all other items necessary to complete the Work.

(C) The price bid for INSTALL NEW BUILDING CONTROL VALVE 2 IN AND UNDER must be a unit price bid per each valve replaced, and must include the cost of all labor, materials, plant, equipment, and insurance required to complete the Work as specified, including valve supports; connections to service and building lines; earth excavation of all materials of whatever nature encountered; backfilling; cleaning up; hauling away of all materials; together with all other items necessary to complete the Work.

(D) When payment is made under this **Section 64.14** for replacement of a service line, no separate payment will be made under **Sections 64.11** and **64.12**.

(E) No direct payment will be made to the Contractor for insulating service lines where required. All costs associated with furnishing, delivering, and installing insulation and appurtenances will be deemed included in the prices bid for the items below.

Payment will be made under:

Item No.	Description	Pay Unit
64.14A	REPLACEMENT OF SERVICE LINE UP TO 1 IN, UP TO 40 FT	EACH
64.14AL	ADDITIONAL LENGTH OF SERVICE LINE UP TO 1 IN BEYOND 40 FT	LF
64.14AM	REPLACEMENT OF SERVICE LINE UP TO 1 IN BETWEEN BUILDING CONTROL VALVE AND METER	LF
64.14B	REPLACEMENT OF SERVICE LINE 1-1/4 TO 2 IN, UP TO 40 FT	EACH
64.14BL	ADDITIONAL LENGTH OF SERVICE LINE 1 -1/4 TO 2 IN BEYOND 40 FT	LF
64.14BM	REPLACEMENT OF SERVICE LINE 1-1/4 TO 2 IN, BETWEEN BUILDING CONTROL VALVE AND METER	LF
64.14V	INSTALL NEW BUILDING CONTROL VALVE 2 IN AND UNDER	EACH

(10) **Refer** to **Section 70.51 - Excavation Of Boulders In Open Cut**, **Subsection 70.51.4**, Page 498:
Add the following new **Subsection 70.51.6**:

70.51.6 EXISTING SEWER ENCASED IN CONCRETE

The Contractor is advised that at certain locations, the existing sewer to be removed may be encased in concrete. Where this condition is encountered, the Contractor must remove the concrete encasement from the site. The quantity, in cubic yards, to be measured for payment must be determined by taking the total volume of the encased sewer including the cradle portion less the volume of the sewer pipe. Payment must be made at the unit price bid for Item No. 70.51EO - EXCAVATION OF BOULDERS IN OPEN CUT and must cover the cost of all labor, materials, plant, equipment and insurance necessary to remove the concrete encasement, together with all work incidental thereto, as directed by the Engineer. The cost of any additional backfilling required to be done in connection with this work must be deemed included in the unit price bid for Item No. 70.51EO
- EXCAVATION OF BOULDERS IN OPEN CUT.

(11) **Refer** to **Subsection 71.41.4 - Specific Pavement Restoration Provisions**, Page 530:
Add the following to **Subsection 71.41.4**:

(E) Specific Pavement Restoration Provisions:

Upon completion, at each and every ordered location, of the reconstructed collapsed or otherwise defective storm, sanitary or combined vitrified clay pipe sewers and the backfill and compaction of all sewer and water main trenches, the Contractor must permanently restore all roadways, sidewalks and curbs within the ordered limits of the trench width and cutbacks as follows:

(1) Roadway Restoration:

(a) The permanent roadway restoration over the **trench widths and cutbacks only** must consist of a top course of one and one-half (1-1/2) inches of asphaltic concrete wearing course on a base course of a minimum of four and one-half (4-1/2) inches of binder mixture, or a top course of one and one-half (1-1/2) inches of asphaltic concrete wearing course on a minimum of one and one-half (1-1/2) inches of binder mixture on a base course of a minimum of six (6) inches of high-early strength concrete, to match the existing pavement as directed by the Engineer.

(b) Before the top course is installed, an additional width of asphalt beyond the edge of new base course must be saw-cut and removed from all edges of trenches to a depth to accommodate the specified top course and the entire area restored. This additional removal must be in accordance with paragraph (c).

(c) Pavement excavation along with saw cutting of pavements for sewer and water main trenches must be in accordance with **Section 71.21 - Pavement Excavation** of the Standard Sewer And Water Main Specifications.

(d) At locations requiring the installation of a high-early strength concrete base course, a reflective cracking membrane must be installed over joints prior to restoration. Additionally, appropriate pavement keys as described below must be used as required by the Engineer.

(e) Pavement keys **Type B-1** must be used to insure a desired four (4) inch curb reveal (two and one-half (2-1/2) inch absolute minimum). Pavement key **Type A** must be used in all intersections. Both keys are to be per Bureau of Highways Operations Specifications and Standard Details of Construction.

(f) The cost of all labor, materials, equipment, samples and tests required and necessary to permanently restore the roadway over the trench width and cutbacks only must be deemed included

in the prices bid for all E.S.V.P. items, all R.C.P. items and all laying ductile iron pipe and fittings items. No separate or additional payment will be made for any one and one-half (1- 1/2) inches of asphaltic concrete wearing course, binder mixture, high-early strength concrete, reflective cracking member, tack coating, full and partial depth saw cutting, excavation of pavements, stripping or milling of existing pavements, etc. required to permanently restore the roadway over the trench width and cutbacks, cost must be deemed included in the prices of the bid items.

(2) Sidewalk And Curb Restoration:

(a) The permanent sidewalk restoration over the **trench width and cutbacks only** must consist of 4" concrete sidewalk (unpigmented) outside driveway and 7" concrete sidewalk (unpigmented) inside driveway and pedestrian ramps, as directed by the Engineer. All sidewalks must be restored in full flag units.

(b) Since all sidewalks must be restored in full flag units, the cutbacks for sidewalk restoration must be defined as the distances beyond the edges of the trenches that require removal in order to get to an adjacent undisturbed full flag unit. For the purpose of this contract sidewalk must be saw-cut, removed and restored in full flag units up to a maximum overall width of ten (10) feet (two (2) full flag units).

(c) The permanent restoration of curbs over the **trench width only** must consist of concrete curb, straight steel faced concrete curb, depressed steel faced concrete curb and corner steel faced concrete curb, as directed by the Engineer.

(d) The cost of all labor, materials, equipment, samples and tests required and necessary to permanently restore the sidewalk and curb over the trench width and cutbacks only must be deemed included in the prices bid for all E.S.V.P. items, all R.C.P. items and all laying ductile iron pipe and fittings items. No separate or additional payment will be made for any concrete sidewalk including 6" foundation material, straight and depressed concrete and steel faced concrete curb, corner steel faced concrete curb, full and partial depth saw cutting, excavation of sidewalks and curbs, etc. required to permanently restore the sidewalk and curb over the trench width and cutbacks, cost must be deemed included in the prices of the bid items.

(3) The cost for all saw cutting of sewer and water trenches and cutbacks, excavation of pavements within limits of sewer and water trenches and cutbacks, tack coating, removal of pavement markings and replacement with thermoplastic reflectorized pavement markings (crosswalks and lane dividers), placement and eradication of temporary roadway markings, stripping or milling of pavement keys and adjustment of city owned castings must be deemed included in the prices bid for the items specified in paragraph (1)(f) above and paragraph (2)(d) above of this section. No separate or additional payment will be made for this work.

(4) All Sidewalks; Driveways; Curbs; Corner Curbs; Pedestrian Ramps; and Roadway base courses, top courses and wearing courses must be installed in conformance with the latest Department of Transportation Specifications and Standard Details, except as amended herein.

(5) The Contractor must exercise caution during the construction operation, so as to prevent damage and/or disturbance to sidewalks, curbs and roadways outside the ordered reconstruction limits of trench width and cutbacks.

(6) All disturbed grass sidewalk areas over the trench width and cutbacks only must be restored in conformance with the **New York City Department of Transportation (NYCDOT) Standard Highway Specifications Section 4.19 - Sodding**. The cost of all labor, materials, equipment, samples and tests required and necessary to install sod in grass sidewalk areas over the trench width and cutbacks must be deemed included in the prices bid for the items specified in paragraph (1)(f) above and paragraph (2)(d) above of this section. No separate or additional payment will be made for this work.

(7) Should granite block, asphalt block or brick pavement be encountered over the trench width and cutbacks only, five (5) inches of binder mixture must be substituted for the blocks and bricks removed. The binder mixture must be installed on a base course of a minimum of six (6) inch of high-early strength concrete and topped with a top course of one and one-half (1-1/2) inches of asphaltic concrete wearing course on a minimum of one and one-half (1-1/2) inches of binder mixture to match the existing pavement as directed by the Engineer. All granite or brick removed must be delivered to the designated City Yard. The cost of all labor, materials, equipment, samples and tests required and necessary to install new pavement as described herein to replace granite block, asphalt block or brick pavement over the trench width and cutbacks must be deemed included in the prices bid for the items specified in paragraph (1)(f) above and paragraph (2)(d) above of this section. No separate or additional payment will be made for this work.

(8) If additional roadway restoration is required and ordered in writing by the Engineer outside the ordered limits of trench widths and cutbacks the cost of all labor, materials, equipment, samples and tests required and necessary to perform this additional roadway restoration work must be deemed included in the prices bid for Item No. 4.02 CA - BINDER MIXTURE, Item No. 4.02 CB - ASPHALTIC CONCRETE MIXTURE, and Item No. 4.04 H - CONCRETE BASE FOR PAVEMENT, VARIABLE THICKNESS FOR TRENCH RESTORATION, (HIGH-EARLY STRENGTH). Included in the prices bid for these items must be the cost for all saw cutting, excavation of pavements, tack coating, removal of pavement markings and replacement with thermoplastic reflectorized pavement markings (crosswalks and lane dividers), placement and eradication of temporary roadway markings, stripping or milling of pavement keys and adjustment of city owned castings. No separate or additional payment will be made for this work.

(9) If additional sidewalk restoration is required and ordered in writing by the Engineer outside the ordered limits of trench widths and cutbacks the cost of all labor, materials, equipment, samples and tests required and necessary to perform this additional sidewalk restoration must be deemed included in the prices bid for Item No. 4.13 AAS - 4” CONCRETE SIDEWALK (UNPIGMENTED), and Item No. 4.13 BAS - 7” CONCRETE SIDEWALK (UNPIGMENTED). Included in the prices bid for these items must be the cost for all saw cutting, excavation of sidewalks, 6” foundation material, etc. No separate or additional payment will be made for this work.

(12) **Add** the following new **SECTION 75.21**

SECTION 75.21 – MAKE SAFE FOR SINKHOLES

75.21.1 DESCRIPTION

Under this section, the Contractor must backfill and make safe sinkholes as necessary in order to perform sewer or water main work.

75.21.2 MATERIALS

Backfill material must meet the requirements of **Section 26.01**.

75.21.3 METHODS

Work within three feet of the payment trench width per **Subsection 40.02.4**, is deemed included in the prices bid for the associated work. Sinkhole areas beyond three feet of the payment trench width will be filled and made safe under this item, where directed by the Engineer.
Pavement restoration will be made under the associated bid item.

75.21.4 MEASUREMENT AND PAYMENT

The fixed sum shown in the bid schedule for **MAKE SAFE FOR SINKHOLES** will be considered the price bid for this item. The fixed sum is not to be altered in any manner by the bidder. Should the amount shown be altered, the new figures will be disregarded and the original price will be used to determine the total amount bid for the contract.

Such Make Safe for Sinkholes work will be paid for under this item in accordance with the requirements of Articles 25 and 26 of the Standard Construction Contract. Payment made under this Fixed Sum item will cover the cost of all labor, materials, plant, equipment, insurance, and incidentals necessary to make safe sinkholes as ordered by the Engineer.
No guarantee is given that this allowance item will in fact be required in this contract. The estimated "fixed sum" amount shown in the Bid Schedule is included in the total bid solely to insure a method of payment for any Make Safe for Sinkholes work by the Contractor, as directed by the Engineer.

Payment will be made under:

Item No.	Item	Pay Unit
75.21	MAKE SAFE FOR SINKHOLES	FIXED SUM

(13) **Refer** to Page 574:
Add the following new **DIVISION VIII**:

DIVISION VIII
DETAILED SPECIFICATION FOR RECONSTRUCTION OF COLLAPSED OR OTHERWISE DEFECTIVE STORM, SANITARY OR COMBINED VITRIFIED CLAY PIPE SEWERS

DSS-1 INTENT

It is intent of this emergency repairs contract, at all locations and areas ordered under this contract as determined by the New York City Department of Environmental Protection and as directed by the Engineer to reconstruct sections of existing collapsed or otherwise defective Storm, Sanitary or Combined Sewers in roadways, sidewalks, malls, medians, pedestrian ways, easements or other non-roadway areas including the reconnection of all existing house sewers, basin connections, and the construction of new manholes as required.

The sections of existing collapsed or otherwise defective Storm, Sanitary or Combined Sewers must be removed and reconstructed with Extra Strength Vitrified Clay Pipe on Concrete Cradle and/or Precast Reinforced Concrete Pipe on Concrete Cradle, complete, as shown, specified or required.

The Contractor, when so ordered by the Engineer, will be required to substitute the use of Ductile Iron Pipe on Stone Bedding in lieu of Extra-Strength Vitrified Clay Pipe on Concrete Cradle for the various sized pipes indicated in the Bid Schedule. The Ductile Iron Pipe must meet all of the requirements, standards and specifications of the Department of Environmental Protection. The payment for Ductile Iron Pipe on Stone Bedding will be made under the applicable unit prices bid for the various sizes of Extra-Strength Vitrified Clay Pipe on Concrete Cradle. The substitution of 15-inch Extra-Strength Vitrified Clay Pipe will be made with 16-inch Ductile Iron Pipe.

At each ordered location the length of existing collapsed or otherwise defective Storm, Sanitary or Combined Pipe Sewer to be reconstructed will vary; however, the length will generally not be less than fifteen (15) feet per trench opening. The actual length at each ordered location and the area of reconstruction will be determined by the New York City Department of Environmental Protection and as directed by the Engineer. For each reconstruction less than a manhole length, the trench opening must be at least one and one-half (1-1/2) feet longer at the ends of the reconstruction to permit proper jointing.

DSS-2 STANDARD SEWER AND WATER MAIN SPECIFICATION

Unless otherwise specified, all work and materials must conform to the applicable sections of the Standard Sewer And Water Main Specifications of the Department of Environmental Protection, Sewer Design Standards of the Department of Environmental Protection, Water Main Standard Drawings of the Department of Environmental Protection, and Standard Highway Specifications of The City of New York.

DSS-3 DEFINITIONS

This contract will be managed by the New York City Department of Environmental Protection's (DEP) Bureau of Water and Sewer Operations. "Engineer" means the Director of DEP's Bureau of Water and Sewer Operations, or a designated representative to act as such in relation to this contract; "Commissioner" means the Commissioner of DEP, or a designated representative to act as such in relation to this contract; "DDC Quality Assurance and Construction Safety Bureau (QACS)," or the "Director of QACS," means the Director of DEP's Bureaus of Water and Sewer Operations, who must oversee the performance of all testing and approvals that are otherwise specified to be performed by QACS.

DSS-4 ISSUANCE OF WORK ORDERS

(A) General: The Contractor must, for the duration of this contract, provide services as directed by the Engineer for the reconstruction of existing sewers or portions thereof, in accordance with the terms and conditions set forth herein. The services to be provided by the Contractor must include both Initial Services and Reconstruction Services, as described below.

(B) Transmission of Notices and Work Orders:

(1) The Engineer must advise the Contractor of the need for services hereunder through Notices, as set forth in **Paragraph (C)** below, and Work Orders, as set forth in **Paragraph (D)** below. The Engineer must send Notices and Work Orders to the Contractor by e-mail or by telephone promptly confirmed by e-mail.

(2) The Contractor must, for the duration of this contract, provide and maintain at its place of business a dedicated telephone line, a dedicated e-mail address and a dedicated fax line for the receipt of Notices and Work Orders hereunder. The e-mail and fax machine must be in operation twenty-four (24) hours per day, seven (7) days per week, for the duration of this contract. The Contractor must not be entitled to any compensation for the provision of such equipment. All expenses for the required telephone, e-mail and fax lines must be deemed included in the Contractor's overhead.

(C) Initial Services to be Provided by Contractor:

(1) Notice: When the need for services arises, the Engineer must issue a Notice to the Contractor. The Notice must specify the following: (a) the location where the Contractor must provide Initial Services, and (b) the Initial Response Time.

(2) Initial Services: The Contractors must complete the Initial Services set forth below within the Initial Response Time specified by the Engineer in the Notice.

(a) Make the area safe for residents in the area of the ordered work and for pedestrian and vehicular traffic. Such work must include, but not be limited to, the placement of adequate lighted barricades, plates, signs, as well as any other work required by the Engineer in order to make the area safe.

(b) As directed by the Engineer the Contractor must:
(i) Commence excavation, and/or
(ii) Provide and operate such pumping equipment to maintain sewage flow

(3) Initial Response Time: Initial Response Time will mean the period of time within which the Contractor must complete the Initial Services, set forth in **Paragraph (2)** above. The Initial Response Time must be specified in the Notice set forth in **Paragraph (1)** above. The Initial Response Time must commence at the time the Notice is transmitted to the Contractor by fax or Email. The Contractor is advised that the Initial Response Time must be determined by the Department of Environmental Protection, in its sole discretion and in accordance with the degree of emergency presented. The Contractor is advised that the Initial Response Time will range from a minimum of within six (6) hours of notification to a maximum of within twenty-four (24) hours of notification.

(D) Work Order: When the need for services arises, the Engineer must issue a Work Order to the Contractor. The Work Order must specify the items set forth below:

(1) Description and Location of the Project
(2) Length of Reconstruction Work
(3) Reconstruction Services to be performed
(4) Reconstruction Time - Time for commencement and completion of work

(E) Reconstruction Services: The Engineer must specify the services necessary and required for reconstruction. The Contractor must perform such reconstruction services within the reconstruction time, as set forth below.

(F) Reconstruction Time: The Reconstruction Time will mean the period of time within which the Contractor must complete the required Reconstruction Services. The Reconstruction Time must be specified in the Work Order. The Contractor is advised that the Reconstruction Time must be determined by the Department of Environmental Protection, in its sole discretion and in accordance with the degree of emergency presented. The Contractor is advised that the Reconstruction Time will range from a minimum of twelve (12) hours to a maximum of forty-eight (48) hours.

Time is of the essence as the public health and safety are involved. Accordingly, the Contractor must perform the work at each and every ordered location promptly and diligently, using such means and methods of construction as will assure its expeditious and satisfactory completion without delay.

(G) Personnel: The Contractor must provide adequate personnel and equipment at each ordered location. Prior to the start of work the Engineer must approve such personnel and equipment. The Engineer reserves the right to determine the personnel and equipment required to adequately and properly carry out the intent of this contract and to order personnel and equipment in excess of that normally required for the work to be done, off the job site. No payment will be made for such excess personnel and equipment. The Contractor must be prepared to provide adequate personnel and equipment to perform the services specified in **Paragraphs (C) and (E)** above at up to six (6) concurrent reconstruction sites continuously and uninterrupted to completion.

(H) No Right To Refuse: The Contractor must have no right to reject or decline to perform any Work Order issued under this contract. However, if the Contractor is unable to begin the work of reconstruction for any reason, the Contractor must so notify the Engineer by telephone as soon as possible, such notifications to be followed by an explanation in writing as to the reasons why the Contractor is unable to begin the required work.

(I) Supplementary Work Orders: The Contractor must perform only the work specifically ordered by the Engineer in the written Work Order. The Department of Environmental Protection reserves the right to order additional work through Supplementary Work Orders issued by the Engineer, as the work on the original Work Order progresses.

(J) Time for Performance of Individual Work Orders. Work Orders may extend beyond the expiration date of the Contract itself. No new Work Orders may be issued after the termination date of the Contract.

(1) All terms and conditions of the Contract applicable to a Work Order must remain

in effect until the Work Order ends.

(2) Work Orders must continue until:

a. the Work covered by the Work Order is completed.

b. the Work Order expires by its own terms; or

c. DEP terminates the Work Order.

DSS-5 WORK INCLUDED

The Contractor must at each and every ordered location, furnish all labor, equipment, materials and supervision, and must perform all the work called for within each item ordered including any incidental work required for a complete and satisfactory job.

All labor, equipment and materials necessary for the proper execution and completion of each item of work called for are to be furnished and delivered by and at the cost and expense of the Contractor, and the work executed and completed in every detail whether specifically mentioned or not.
The Contractor must be prepared to do this work without prepared plans.

At each ordered location the Contractor must remove and clean the sewer of any debris up to and including manholes on both sides of the section of sewer being reconstructed during and after the completion of the work.

DSS-6 EXISTING CONDITIONS

The Contractor is advised that the Engineer will furnish to the Contractor, where available, plans of the existing collapsed or otherwise defective Storm, Sanitary or Combined Sewers.

The Contractor is further advised that since the reconstructed sewer is to be within the same trench where the existing collapsed or otherwise defective pipe sewer was constructed, it is assumed that the original trench was backfilled with acceptable materials and that no exceptionally large boulders, or other obstructions would hinder or delay the excavation work. If boulders, rip-rap and other large objects as herein before specified in excess of one-half (1/2) cubic yard in volume are encountered during the excavation down to the top of the existing collapsed or otherwise defective pipe sewer, payment for the removal of same will be paid for at the unit price bid for Item No. 70.51EO - EXCAVATION OF BOULDERS IN OPEN CUT. The entire boulder must be measured where practicable. The resultant void must be backfilled and paid for under Item No. 73.41AG - ADDITIONAL SELECT GRANULAR BACKFILL.

The average depth to be excavated to subgrade for the reconstructed sewer is eight (8) to nine (9) feet, varying from a minimum depth of four (4) feet to a maximum depth of thirty (30) feet. Deeper sewer excavations to a maximum depth of thirty (30) feet, must be paid for under Item No.73.31AE2 - ADDITIONAL EARTH EXCAVATION INCLUDING TEST PITS (OVER 12’ TO 16’ DEPTH), Item No. 73.31AE3 - ADDITIONAL EARTH EXCAVATION INCLUDING TEST PITS (OVER 16’ TO 20’ DEPTH), Item No. 73.31AE4 – ADDITIONAL EARTH EXCAVATION INCLUDING TEST PITS (OVER 20’ TO 24’ DEPTH), Item No. 73.31AE5 – ADDITIONAL EARTH EXCAVATION INCLUDING TEST PITS (OVER 24’ DEPTH).

DSS-7 PAYMENT FOR WORK PERFORMED

The Contractor must include in the unit price bid for each item of work, the cost of all labor, equipment, materials, supervision, overhead, profit, insurance, and all other services required to execute and complete each item of work.

Payment will be made at the unit price bid for the various items of work ordered in writing by the Engineer and actually performed and incorporated into the work. The Contractor is advised that the payment for each increment of length of sewer to be replaced will be made at the unit prices bid for each increment of length of sewer to be replaced according to the following schedule:

(a) Minimum fifteen (15) linear feet. For example: item no. 1.A08S, 1.A10S, 1.A12S, 1.A15S, 1.A18S, 1.A24S, 1.A30S, 1.A36S, 1.A42S, 1.A48S, 1.A54S, 1.A60S.
(b) Additional length beyond the minimum fifteen (15) linear feet to a maximum of one hundred (100) linear feet. Fixed unit price as listed in the contract document - bid schedule of prices. For example: item no. 1.A08S1, 1.A10S1, 1.A12S1, 1.A15S1, 1.A18S1, 1.B24S1, 1.B30S1, 1.B36S1, 1.B42S1, 1.C48S1, 1.C54S1, 1.C60S1.
(c) Additional length beyond one hundred (100) linear feet. Fixed unit price as listed in the contract document - bid schedule of prices. For example: item no. 1.A10S2, 1.A12S2, 1.A15S2, 1.A18S2, 1.B24S2, 1.B30S2, 1.B36S2, 1.B42S2, 1.C48S2, 1.C54S2, 1.C60S2.

Where Class IV RCP Sewer is required to be installed, the Contractor will be paid 120% of the unit price for the associated Class III RCP Sewer. Where Class V RCP Sewer is required to be installed, the Contractor will be paid 135% of the unit price for the associated Class III RCP Sewer. No additional payment will be made for the installation of Class IV or Class V RCP Sewers.

DSS-8 PROCEDURAL ORDERS TO CONTRACTOR

The Contractor must either give personal attention to the work or employ and retain a competent superintendent or foreman at each and every ordered location while the work is in progress. Instructions given to the superintendent or foreman must be considered as having been given to the Contractor.

DSS-9 CITY TO NOTIFY CITY DEPARTMENT

At the time the Engineer orders the Contractor to proceed with the work, the Department of Environmental Protection must notify and transmit a copy of the order to start work to all public and private agencies concerned. These notifications must be in addition to the Contractors required notifications of public and private agencies as specified herein.

At the start of the work, the Contractor will be furnished with a temporary street opening permit by the Department of Environmental Protection. However, the Contractor must obtain the prescribed permits from the Department of Transportation within forty-eight (48) hours of beginning the work.

DSS-10 MEASUREMENTS

All measurements must be made under the supervision of the Engineer. The Contractor's representative must notify the Engineer when measurements are to be made so the Engineer may be present at that time, the Contractor must record all measurements and give the Engineer duplicate copies of these measurements.

DSS-11 WORK ORDERED BY THE ENGINEER AND NOT OTHERWISE COVERED IN THE DETAILED SPECIFICATION.

During the course of the work being performed at any ordered location, it may be necessary for the Engineer to order, in writing, extra work not otherwise covered in the work order and in the Detailed Specifications. Payment for extra work for which there are classified bid item(s) must be made under the unit price bid for the respective bid item(s). Payment for extra work for which there are no specific classified bid item(s) must be made in accordance with **Articles 25 and 26** of the Contract

DSS-12 INSPECTION OF MATERIALS FURNISHED

In lieu of the procedure for the inspection of materials to be furnished, as called for in **DIVISION III** of the Standard Sewer And Water Main Specifications, the City will accept certificates from the Contractor's materials suppliers stating that the materials furnished and incorporated in the work at each ordered location, meets the requirement of the appropriate sections of the specifications. Such material certificates must be provided to the Engineer by the completion date specified in the work order for each ordered location.

DSS-13 DISPOSAL OF WATER FROM TRENCHES (DEWATERING)

(1) DESCRIPTION **-** The Contractor will be required, at all ordered locations where groundwater is present in the trench and as ordered by the Engineer, to install, maintain and operate a dewatering system to adequately lower the groundwater table to a point below the trench subgrade.

(2) METHODS - Upon obtaining a work order to commence work at any location where dewatering is known to be required, or immediately upon discovery at any location that dewatering is required, the Contractor must prepare working drawings and designs showing all facets of the proposed dewatering system including but not limited to; soil type, permeability, anticipated discharge amount, wellpoint spacing, depth of well points, size of header pipe, location of discharge point, etc. All of this information must be submitted to the Engineer for review and approval. Wherever there is insufficient data available to provide accurate information on the soil properties required above, the Contractor must be permitted to make assumptions and/or educated estimates provided that it is so stated in the submissions.

(3) CRITERIA **-** The parameters or need for the installation of a dewatering system must be determined by the Engineer. The location of the water table must be a minimum of one (1) foot above subgrade and the maximum location must be twenty-nine (29) feet above subgrade prior to the use of any wellpoints. These minimum and maximum heights of water table are based upon a trench depth not exceeding thirty (30) feet. Lowering of the water level more than thirty (30) feet is beyond the scope of this item. The use of sump pumps or open trench pumping must not be considered for payment.

(4) PERMITS - Whenever the Contractor is required to install a temporary dewatering system to lower the groundwater level within the Boroughs of Brooklyn or Queens it will be necessary to obtain a New York State Department of Environmental Conservation (NYSDEC) Long Island Well Permit. Since all work performed under the scope of this project is of an emergency nature the Dewatering Contractor will be required to notify NYSDEC as expeditiously as possible to inform them of the impending work. The Contractor will be required to submit all data and water quality test results to NYSDEC upon their request.

(5) MEASUREMENT AND PRICE TO COVER - There must be six (6) items under which payment will be made for dewatering. These are as follows:

(a) Mobilization (Dewatering) - The quantity of mobilization to be measured for payment must be a per EACH measurement for any ordered location mobilization for dewatering performed, complete, as specified or required. The contract price for Item No. DSS008A - MOBILIZATION (DEWATERING) must be the unit price bid per EACH for any ordered location mobilization when dewatering is required as specified herein, and must cover the cost of all labor, materials, equipment, setting up of plant, samples, necessary design computations and drawings, tests and permits required and necessary to mobilize for dewatering at each ordered location, including the furnishing and installing of all other items necessary to complete this work and do all work incidental thereto; all in accordance with the specifications, and as directed by the Engineer.

(b) Header and Discharge Pipe Installation - The quantity of header and discharge pipe to be measured for payment must be the number of linear feet of header and discharge pipe incorporated in the work, complete, as shown, specified or required. The contract price for Item No. DSS008B - HEADER AND DISCHARGE PIPE INSTALLATION must be the unit price bid per linear foot for header and discharge pipe installed and utilized at any ordered location and must cover the cost of all labor, materials, equipment and tests required and necessary to install the header and discharge pipe at each ordered location, including the furnishing and installing of all other items necessary to complete this work and do all work incidental thereto; all in accordance with the specifications, and as directed by the Engineer.

(c) Header and Discharge Pipe Rental - The quantity of header and discharge pipe rental to be measured for payment must be the number of sections per day of header and discharge pipe incorporated into the work, complete, as shown, specified or required. A section of header and discharge pipe must be measured as a ten (10) foot length or portion thereof. The contract price for Item No. DSS008C - HEADER AND DISCHARGE PIPE RENTAL must be the unit price bid per section per day for header and discharge pipe installed and utilized at any ordered location and must cover all costs required and necessary for rental of header and discharge pipe. Payment under this item will commence upon completion of installation and start of operation of the dewatering system. Payment will cease upon completion of the need for dewatering as approved or ordered by the Engineer.

(d) Wellpoint Installation - The quantity of wellpoint installation to be measured for payment must be the number of wellpoints incorporated into the work, complete, as shown, specified or required. The contract price for Item No. DSS008D - WELLPOINT INSTALLATION must be the unit price bid per each for wellpoints installed and utilized at any ordered location and must cover the cost of all labor, materials, equipment and tests required and necessary to install the wellpoints at each ordered location, including the furnishing and installing of all other items necessary to complete this work and do all work incidental thereto; all in accordance with the specifications, and as directed by the Engineer.

(e) Wellpoint Rental - The quantity of wellpoint rental to be measured for payment must be the number of wellpoints per day incorporated into the work, complete, as shown, specified or required. The contract price for Item No. DSS008E - WELLPOINT RENTAL must be the unit price bid per each per day for wellpoints installed and utilized at any ordered location and must cover all costs required and necessary for rental of wellpoints. Payment under this item will commence upon completion of installation and start of operation of the dewatering system. Payment will cease upon completion of the need for dewatering as approved or ordered by the Engineer.

(f) System Operation - The quantity of system operation to be measured for payment must be the number of hours of system operation required, during normal working hours and/or as approved or ordered by the Engineer, to operate the dewatering system, complete, as specified or required. The contract price for Item No. DSS008F - SYSTEM OPERATION must be the unit price bid per hour for system operation at any ordered location and must cover the cost of all labor, materials, plant and equipment required and necessary to properly operate the dewatering system at each ordered location, including the furnishing and installing of all other items necessary to complete this work and do all work incidental thereto; all in accordance with the specifications, and as directed by the Engineer. Payment under this item will be made based upon the hours the system is in operation and staffed during normal working hours and/or as approved or ordered by the Engineer. No additional or separate payment will be made for any additional costs arising out of labor overtime costs (premium costs) or for any work that is performed beyond normal work hours or on weekends. The costs thereof must be deemed included in the unit price bid per hour of System Operation.

(6) ADDITIONAL PAYMENT - If Header or Discharge Pipe is required to be buried to provide vehicular and/or pedestrian access as determined in writing by the Engineer, additional payments must be made as follows; for any excavation, removal of pavements, plating or temporary pavement, backfilling and compaction required, payment must be made under Item No. 73.31AE2 - ADDITIONAL EARTH EXCAVATION INCLUDING TEST PITS (OVER 12' TO 16' DEPTH); for any additional fill ordered in writing by the Engineer, payment must be made under Item No. 73.41AG - ADDITIONAL SELECT GRANULAR BACKFILL; and for any permanent pavement restoration required outside the limits of the trench widths and cutbacks, payment must be made under the appropriate pavement restoration items.

(7) NO ADDITIONAL PAYMENT - No additional payment will be made for any costs associated with demobilization as a result of dewatering. The costs thereof must be deemed included in the unit prices bid for all associated dewatering items.

DSS-14 TREE CONSULTANT

(1) INTENT

The Contractor must engage the services of a professional forester or arborist as a Tree Consultant who must, in anticipation of the potential for work in sidewalk and roadway street areas that will affect trees, prepare a preconstruction report and serve as an advisor to the Engineer and the Contractor. The Tree Consultant must be responsible, at all ordered locations affecting trees, for checking, inspecting and directing; all construction work around existing trees; all maintenance pruning of trees; all fertilization; and all protection of trees. The Tree Consultant must also be responsible for ensuring and enforcing compliance of all work with these specifications, and the Department of Parks and Recreation permits, requirements, specifications and standards.

(2) DESCRIPTION

The Tree Consultant must be a professional forester or arborist approved by the Engineer, who must, in anticipation of the potential for work in sidewalk and roadway street areas that will affect trees, prepare a preconstruction report advising the Engineer and the Contractor as to the following:

(a) Possible means and methods (including alternate methods) of excavation, backfill and compaction at potential sidewalk and roadway street areas that will affect trees so as to ensure the least impact upon existing trees and compliance with these specifications, and the Department of Parks and Recreation permits, specifications, and standards.

(b) Probable means and methods (including alternate methods) of maintenance pruning operations where necessary.

(c) Assess potential damage or injury to trees and root systems that may be caused by Contractor's operation and establish construction operation procedures for preventing such damage or injury.

(d) And any other procedures required to satisfy these specifications, and the Borough Forester's requirements.

The Tree Consultant will be required, at all ordered locations affecting trees, to be present at all times during the Contractor's construction operation to ensure, direct and enforce compliance by the Contractor with these specifications, and all Department of Parks and Recreation permits, requirements, specifications and standards.

The Tree Consultant must be a person independent of and not associated with those persons performing tree pruning, protection and fertilization operations under this contract.

The Tree Consultant must, at all ordered sidewalk street locations affecting trees, personally witness all; sidewalk, driveway, curb and roadway removal; excavation, backfill and compaction work; and tree pruning, protection and fertilization. The Tree Consultant must, at all ordered roadway street locations affecting trees, personally witness all; excavation, backfill and compaction work; and tree pruning, protection and fertilization. The Tree Consultant must at each ordered location affecting trees, locate and identify all trees affected and the means and methods to be utilized for their protection. The Tree Consultant must also approve all Contractor's construction equipment and manner of work. The Tree Consultant must also assess any damage and recommend corrective action. The Tree Consultant must identify trees, recommend construction alternatives to save existing trees and must do all other work required and necessary to ensure compliance with these specifications, and the Department of Parks and Recreation permits, requirements, specifications and standards.

(3) SELECTION PROCESS

Prior to the start of work the Contractor must submit the name and qualifications of a person whom the Contractor feels would be acceptable as a Tree Consultant.

The Tree Consultant must submit at this time a proposal describing its relevant experience and general approach towards fulfilling the requirements and objectives of this section.

(4) QUALIFICATIONS

The minimum qualifications required for consideration as the Tree Consultant must be as follows:

(a) Associate degree in forestry, arboriculture, horticulture, or related plant science field, and five (5) years of full-time professional experience in landscape design and the field supervision of techniques to mitigate damage to existing trees from the negative impacts of construction; or

(b) B.S. in forestry, arboriculture, horticulture, or related plant science field, and three (3) years of full-time professional experience in landscape design and the field supervision of techniques to mitigate damage to existing trees from the negative impacts of construction; or

(c) M.S. in forestry, arboriculture, horticulture, or related plant science field, and one (1) year of full-time professional experience in landscape design and the field supervision of techniques to mitigate damage to existing trees from the negative impacts of construction; or

(d) Arborist certification from the New York State Arborists/International Society of Arboriculture Chapter, Inc., and three (3) years of full-time professional experience in landscape design and the field supervision of techniques to mitigate damage of existing trees from the negative impacts of construction; or

(e) Other state arborist certification recognized by the International Society of Arboriculture or the National Arborist Association, and three (3) years of full-time professional experience in landscape design and the field supervision of techniques to mitigate damage to existing trees from the negative impacts of construction.

(5) SUBMISSION OF REPORTS

Upon approval, the Tree Consultant will be required to submit five (5) copies of the preconstruction report together with all materials and plans required. Reports must be bound and bear the name of the contract and signature of the preparer.

(6) MEASUREMENT

The quantity to be measured for payment of Item No. DSS006A - TREE CONSULTANT must be the time, measured in person hours, that the Tree Consultant actually performed work on this contract as specified and to the satisfaction of the Engineer.

(7) PRICE TO COVER

The contract price bid for Item No. DSS006A - TREE CONSULTANT must be a unit price per person hour and must cover the cost of all labor, material, plant, equipment, inspection, reports and incidentals required to complete the work, all in accordance with the plans, specifications, standard and as directed by the Engineer and Borough Forester.

DSS-15 TREES TO BE REMOVED AND REPLACED

During the work of reconstructing sewers in sidewalk or mall areas, the Contractor, when ordered in writing by the Engineer and approved by the Parks Department, must remove trees along the line of the work. The cost of all the labor and materials required to remove trees, as directed, must be deemed included in the unit prices bid for the respective tree removal items.

Where trees along the line of the work are removed, as directed, the Contractor must replace such trees with new trees in accordance with the requirements of the Department of Parks and Recreation. The cost of all the labor and materials required to furnish and place new trees, as directed, together with the cutting of tree pits and all work incidental thereto, must be deemed included in the unit price bid for Item No. 4.16 CA405 - TREES PLANTED, 3" TO 3-1/2" CALIPER, ALL TYPES, IN 4' X 5' TREE PITS.

DSS-16 ADDITIONAL SIDEWALK RESTORATION

The Contractor is notified that during the work of reconstructing sewers at any ordered location, the Engineer may order additional sidewalk reconstruction outside the ordered trench and cutback restoration limits.

The cost of all the labor and materials required to perform this ordered additional existing concrete sidewalk removal and reconstruction outside the ordered sewer and water main trench and cutback restoration limits, together with all work incidental thereto, must be deemed included in the unit prices bid for Item No.4.13 AAS - 4" CONCRETE SIDEWALK (UNPIGMENTED), and Item No. 4.13 BAS - 7" CONCRETE SIDEWALK (UNPIGMENTED).
It must be understood that such sidewalk reconstruction is in addition to and does not include sidewalk restoration included in the unit price bid for the reconstruction of sewers and water mains.

DSS-17 ADDITIONAL ROADWAY RESTORATION

The Contractor is notified that during the work of reconstructing sewers at any ordered location, the Engineer may order additional roadway reconstruction outside the ordered trench and cutback restoration limits.

The cost of all the labor and materials required to perform this ordered additional existing roadway removal and reconstruction outside the ordered sewer and water main trench and cutback restoration limits, together with all work incidental thereto, must be deemed included in the unit prices bid for Item No. 4.02 CA - BINDER MIXTURE, Item No. 4.02 CB - ASPHALTIC CONCRETE MIXTURE, and Item No. 4.04 H - CONCRETE BASE FOR PAVEMENT, VARIABLE THICKNESS FOR TRENCH RESTORATION, (HIGH-EARLY STRENGTH).

It must be understood that such roadway reconstruction is in addition to and does not include roadway restoration included in the unit price bid for the reconstruction of sewers and water mains.

DSS-18 METHOD OF PAYMENT

The following items of work herein specified are provided in order to afford the City of New York opportunity to have such work done if found necessary. It must be understood by the Contractor that the work as specified under any one of these items may be ordered by the City of New York and in the unit quantities found necessary by the Department of Environmental Protection. The City of New York, however, is not bound to order any of the work specified under these items. Payment will be made only for the actual number of unit quantities ordered under each item.

In the execution of any work under any of these items, the Contractor must see that the work is progressed as quickly as possible and without delay. All labor, equipment and materials necessary for the proper execution and completion of each item of work called for are to be furnished and delivered by and at the cost and expense of the Contractor and the work executed and completed in every detail whether specifically mentioned or not.

The contract prices for Extra Strength Vitrified Pipe Sewers and/or Precast Reinforced Concrete Pipe Sewers must be the unit price bid per linear foot for each size, kind, class and type of sewer and must cover the cost of all labor, materials, equipment, samples and tests required and necessary to construct the extra strength vitrified pipe sewers and/or the precast reinforced concrete pipe sewers of the sizes and to the lines and grades as shown, specified, or ordered, including the earth excavation of all materials of whatever nature encountered (See **Section 40.03 - Earth Excavation** and except

excavation of concrete encased sewers and other large objects as specified herein); all pumping and work required to eliminate blockages and restore and maintain sewage flow, all sheeting and bracing; pumping; fluming; bridging; decking; breaking down and filling in of abandoned sewer appurtenances; connections; concrete cradle and encasements; maintaining flow in sewers; backfilling; cleaning up; mobilization (except mobilization for dewatering purpose); temporary restoration of street surfaces; support and maintenance of existing City structures that are encountered during excavation (including curbs, stoops, fences, copings, vaults, light poles, etc.); removal of existing collapsed or otherwise defective sewers and their foundation supports of broken stone or concrete cradle; removal, reconstruction and reconnection of existing house sewer connections together with spurs and risers for existing house connections; removal, reconstruction and reconnection of existing basin connections; removing and cleaning the sewer of any debris up to and including manholes on both sides of the section of sewer being reconstructed during and after the completion of the work at any ordered location; permanent restoration of all roadway top courses and base courses within the limits of trenches and cutbacks; permanent restoration of all sidewalks within the limits of trenches and cutbacks (sidewalks must be restored in full flag units up to a maximum overall width of ten (10) feet) together with foundation material; permanent restoration of all curbs, malls, medians, pedestrianways and other non-roadway areas within the limits of trenches and cutbacks together with foundation materials; and furnishing and installing all other items necessary to complete this work and do all work incidental thereto, all in accordance with the plans, specifications and standards and as directed by the Engineer. In addition, included in the price hereunder must be the cost of all labor and materials necessary to construct the concrete cradle so that it must extend under the existing sewer one and one-half (1-1/2) feet beyond the pipe joints at each end of the reconstructed sewer; and to construct at both ends where the reconstructed sewer joins the existing sewer, joints that must be encased with a four (4) inch thick concrete encasement, twelve (12) inches long on either side of the joint.

When additional spurs are required and ordered in writing by the Engineer for future house connections, payment must be made for these in place additional spurs under the prices bid for

Item No. 52.31V06P00 - 6” E.S.V.P. SPUR FOR HOUSE CONNECTION ON E.S.V.P. SEWER, and Item No. 52.31V08P00 - 8” E.S.V.P. SPUR FOR HOUSE CONNECTION ON E.S.V.P. SEWER.

When additional risers are required and ordered in writing by the Engineer for future house connections, payment must be made for these in place additional risers under the prices bid for Item No. 52.21V08 - 8” E.S.V.P. RISER FOR HOUSE CONNECTION, and Item No. 52.21V10 - 10” E.S.V.P. RISER FOR HOUSE CONNECTION.

When basin connections are required and ordered in writing by the Engineer to be relayed in a new location, payment must be made for these in place basin connections under the price bid for Item No. 52.11D12 - 12” DUCTILE IRON PIPE BASIN CONNECTION or 52.11D12C – 12” DUCTILE IRON PIPE BASIN CONNECTION (CHUTE CONNECTION WORK ONLY), 52.11D12D - 12” DUCTILE IRON PIPE BASIN CONNECTION FOR MODIFICATION AND/OR REPLACEMENT OF CATCH BASINS, 52.11V12 – 12’’ EXTRA STRENGTH VIRTIFIED PIPE BASIN CONNECTION, 52.11V12C – 12’’ EXTRA STRENGTH VIRTIFIED PIPE BASIN CONNECTION (CHUTE CONNECTION WORK ONLY), 52.11V12D – 12’’ EXTRA STRENGTH VIRTIFIED PIPE BASIN CONNECTION FOR MODIFICATION AND/OR REPLACEMENT OF CATCH BASIN.

Payment for in place additional steel reinforcing bars required and ordered in writing by the Engineer must be made under the price bid for Item No. 73.51AS - ADDITIONAL STEEL REINFORCING BARS.

Payment for in place additional select granular backfill required and ordered in writing by the Engineer must be made under the price bid for Item No. 73.41AG - ADDITIONAL SELECT GRANULAR BACKFILL.

Payment for in place additional brick masonry required and ordered in writing by the Engineer must be made under the price bid for Item No. 73.11AB - ADDITIONAL BRICK MASONRY.

Payment for in place standard manholes required and ordered in writing by the Engineer, must be made under the prices bid for Item No. 51.21S0A1000V - STANDARD MANHOLE TYPE A-1, Item No. 51.21S0A2000V - STANDARD MANHOLE TYPE A-2, Item No. 51.21S0B1000V - STANDARD

MANHOLE TYPE B-1, Item No. 51.21S0B2000V - STANDARD MANHOLE TYPE B-2, Item No. 51.21S0C1000E – STANDARD MANHOLE TYPE C-1 ON EXISTING SEWER, Item No. 51.21S0C2000E – STANDARD MANHOLE TYPE C-2 ON EXISTING SEWER Item No. 51.31S00100E – STANDARD DROP-PIPE MANHOLE TYPE I ON EXISTING SEWER, Included in the respective prices bid must be the cost for the removal of existing manholes.

Payment for in place standard catch basins required and ordered in writing by the Engineer must be made under the price bid for Item No. 51.41S001 - STANDARD CATCH BASIN, TYPE 1. Included in the respective prices bid must be the cost for the removal of existing catch basins. Payment for excavation of boulders in open cut required and ordered in writing by the Engineer must be made under the price bid for Item No. 70.51EO - EXCAVATION OF BOULDERS IN OPEN CUT.

Payment for in place planted trees required and ordered in writing by the Engineer, must be made under the price bid for Item No. 4.16 CA405 - TREES PLANTED, 3” TO 3-1/2” CALIPER, ALL TYPES, IN 4’ X 5’ TREE PITS. Included in the price bid must be the cost for tree pits, fertilizer, stakes and wire, topsoil, etc.

Payment for additional earth excavation required and ordered in writing by the Engineer, must be made under the prices bid for Item No. 73.31AE2 - ADDITIONAL EARTH EXCAVATION INCLUDING TEST PITS (OVER 12’ TO 16’ DEPTH), Item No. 73.31AE3 - ADDITIONAL EARTH EXCAVATION INCLUDING TEST PITS (OVER 16’ TO 20’ DEPTH), Item No. 73.31AE4 - ADDITIONAL EARTH EXCAVATION INCLUDING TEST PITS (OVER 20’ TO 24’ DEPTH) and Item No. 73.31AE5 - ADDITIONAL EARTH EXCAVATION INCLUDING TEST PITS (OVER 24’ DEPTH) Included in the prices bid must be the cost for additional sheeting, bracing and pumping required beyond the limits hereinbefore mentioned.

Payment for in place stone ballast required and ordered in writing by the Engineer, must be made under the price bid for Item No. 70.71SB - STONE BALLAST. Included in the price bid must be the cost for additional excavation for placement of stone ballast.

Payment for in place additional concrete required and ordered in writing by the Engineer, must be made under the price bid for Item No. 73.21AC - ADDITIONAL CONCRETE.

Payment for maintenance and protection of traffic required and ordered in writing by the Engineer must be made under the price bid for Item No. 6.70 - MAINTENANCE AND PROTECTION OF TRAFFIC. Included in this item will be payment for making the area safe for residents and for pedestrian and vehicular traffic within the initial response time.

Payment for maintenance of site required and ordered in writing by the Engineer must be made under the price bid for Item No. 7.13 A - MAINTENANCE OF SITE.

Payment for in place fencing required and ordered in writing by the Engineer, must be made under the price bid for Item No. 70.31FN - FENCING.

Payment for television inspection and digital audio-visual recording of sewers required and ordered in writing by the Engineer must be made under the price bid for Item No. 53.11DR - TELEVISION INSPECTION AND DIGITAL AUDIO-VISUAL RECORDING OF SEWERS.

Payment for removal of trees required and ordered in writing by the Engineer, must be made under the prices bid for Item No. 4.16 AA - TREES REMOVED (4” TO UNDER 12” CALIPER), Item No. 4.16 AB - TREES REMOVED (12” TO UNDER 18” CALIPER), Item No. 4.16 AC - TREES REMOVED (18” TO UNDER 24” CALIPER), and Item No. 4.16 AD - TREES REMOVED (24” CALIPER AND OVER).

Payment for maintenance tree pruning required and ordered in writing by the Engineer, must be made under the prices bid for Item No. 4.18 A - MAINTENANCE TREE PRUNING (UNDER 12” CALIPER), Item No. 4.18 B - MAINTENANCE TREE PRUNING (12” TO UNDER 18” CALIPER), Item No. 4.18 C - MAINTENANCE TREE PRUNING (18” TO UNDER 24” CALIPER), and Item No. 4.18 D

- MAINTENANCE TREE PRUNING (24" CALIPER AND OVER).

Payment for 8-inch, 12-inch and 20-inch water main offsets and replacements required and ordered in writing by the Engineer due to water mains crossing sewer trenches and water mains interfering with sewer trenches must be made under the prices bid for the various water main items provided in the contract for water main work actually performed.

Payment for photographs required and ordered in writing by the Engineer, must be made under the price bid for Item No. 6.43 D - DIGITAL PHOTOGRAPHS.

DSS-19 GUARANTEED MINIMUM

In the event the Contractor is not issued any Work Orders hereunder, the City agrees to pay, and the Contractor agrees to accept, a minimum fee of two thousand dollars ($2,000.00). The Contractor further agrees that under such circumstances, the Contractor has no action for damages or for loss of profits against the City.

DSS-20 WORK OUTSIDE THE ORDERED SEWER AND WATER MAIN TRENCHES AND CUTBACK RESTORATION LIMITS

The Contractor is notified that it will be required to work in, make safe and restore areas outside the limits of a standard sewer trench in roadways, sidewalks, malls, medians, pedestrian ways, easements or other non-roadway areas. Such work includes, but is not limited to, providing Initial Services; providing MPT;

sawcutting of pavement; pavement excavation; excavation of material of any sorts; locating, supporting and protecting private and City facilities; support of excavation; backfilling and temporary and permanent pavement restoration within such areas. Work must be performed according to applicable Specifications. Unless otherwise stated, all work must be paid for under the applicable contract bid items.

Sawcutting must be performed in accordance with Standard Sewer And Water Main Specifications Section 71.11 – Saw Cutting Pavement or as directed by the Engineer. No separate payment will be made for sawcutting. Payment will be deemed included in the unit prices bid for Item No. 4.02 CA - BINDER MIXTURE, Item No. 4.02 CB – ASPHALTIC CONCRETE MIXTURE, Item No. 4.04 H - CONCRETE BASE FOR PAVEMENT, VARIABLE THICKNESS FOR TRENCH RESTORATION, (HIGH-EARLY STRENGTH), Item No. 4.13 AAS - 4" CONCRETE SIDEWALK (UNPIGMENTED), and Item No. 4.13 BAS - 7" CONCRETE SIDEWALK (UNPIGMENTED).

Pavement Excavation must be performed in accordance with Standard Sewer And Water Main Specifications Section 71.21 – Excavation. No separate payment will be made for Pavement Excavation. Payment must be deemed included in the unit prices bid for Item Nos. 73.31AE(1) through 73.31AE(5) - ADDITIONAL EARTH EXCAVATION INCLUDING TEST PITS.

Excavation must be performed in accordance with Standard Sewer And Water Main Specifications Section 40.03 – Excavation and must be paid for under Item Nos. 73.31AE(1) through 73.31AE(5) - ADDITIONAL EARTH EXCAVATION INCLUDING TEST PITS

If in the opinion of the Engineer support of excavation is required it must be performed as directed by the Engineer and in accordance with Standard Sewer And Water Main Specifications Section 40.05 – Sheeting. No separate payment will be made for sheeting. Payment will be deemed included in with the unit prices bid for unit items under this contract.

Backfilling must be performed in accordance with Standard Sewer And Water Main Specifications Section 40.06 – Backfilling and must be paid for under Item 73.41AG – ADDITIONAL SELECT GRANULAR FILL.

Pavement Restoration must be performed in accordance with Standard Sewer And Water Main Specifications Section 40.09 - Pavement Restoration and must be paid for under Item No. 4.02 CA - BINDER MIXTURE, Item No. 4.02 CB – ASPHALTIC CONCRETE MIXTURE, Item No. 4.04 H - CONCRETE BASE FOR PAVEMENT, VARIABLE THICKNESS FOR TRENCH RESTORATION, (HIGH-EARLY STRENGTH), Item No. 4.13 AAS - 4" CONCRETE SIDEWALK (UNPIGMENTED), and Item No.

4.13 BAS - 7” CONCRETE SIDEWALK (UNPIGMENTED).

The contractor must be prepared to encounter facilities owned by private utility companies within the work area. As needed to complete the Work under this contract, such facilities must be located, uncovered, protected, supported, maintained and/or relocated in accordance with the direction of the private utility companies. Any and all work performed on, or in connection with, facilities owned by private utility companies must be done in accordance with Section U and Section EP-7 of this contract. Payment for such work not covered under EP-7 must be a matter of negotiation between the contractor and the private utility companies.

DSS-21 PRIVATE VEHICLES

The Contractor must note that parked vehicles may be found within the area of work to be performed under this contract. If removal and relocation of parked vehicles from the work zone is required, such removal and relocation must be coordinated and executed by the Contractor. Contractor must be responsible for hiring a towing company to remove and relocate the vehicles from the work area to a nearby safe location. Coordination of the removal and relocation of the vehicles in a timely manner is deemed part of the Initial Services and the Contractor must be prepared to execute such coordination to ensure the vehicles are removed within the Initial Response Time. The contractor must make sure not to incur any damage to the vehicles being removed and relocated. The Contractor is responsible for any damage that any vehicle may sustain during the removal and relocation process. Payment for such coordination, removal, and relocation of vehicles is included with the unit prices bid for all items under this contract.

D. REVISIONS TO THE SPECIFICATIONS FOR TRUNK MAIN WORK

1) **Refer** to **Part 1 – Furnishing And Delivering Steel Pipes And Appurtenances 30 Inches In Diameter And Larger, Section 11. Fabrication:,** Page 4;
Add the following to **Section 11:**

   All steel water mains must be spiral welded pipes, and all steel water main fittings must be fabricated from qualified spiral welded pipe. Can type pipe is not acceptable except for fabrication of tees and reducers.

2) **Refer** to **Part 1 – Furnishing And Delivering Steel Pipes And Appurtenances 30 Inches In Diameter And Larger, Section 13. Special Fittings:,** Page 5;
Add the following to **Section 13:**

   The steel reducer must have a length of seven (7) feet for every twelve (12) inches reduction in diameter.

END OF SECTION

This Section consists of Forty-Three (43) Pages

(NO TEXT ON THIS PAGE)

EP7 (3.0) - PAGES

GAS COST SHARING (EP-7) STANDARD SPECIFICATIONS

MULTIPLIER CONTRACTS

NOTICE

THE PAGES CONTAINED IN THIS SECTION REPRESENT THE GAS COST SHARING WORK THAT SHALL APPLY TO AND BECOME A PART OF THE CONTRACT.

(NO TEXT ON THIS PAGE)

TABLE OF CONTENT

I - NOTICE TO ALL BIDDERS; GAS COST SHARING WORK

II - GENERAL PROVISIONS; GAS COST SHARING WORK

1. General
2. Gas Interferences And Accommodations
   2a. Water Main Accommodations
   2b. Sewer Accommodations
3. Quantity Overruns, EP-7 Funded Bid Items
4. Changes And Extra Work
5. Excavation
6. Backfilling And Street Restoration
7. **Non-Responsive Bids "NO TEXT"**
8. Minimum Clearances
9. Work By Facility Operator
10. Materials Furnished By Facility Operator
11. Liability And Insurance
12. Width And Depth Of Excavation
13. Depth And Crossing Angles Of Gas Facilities
14. Maintenance Of Traffic For Gas Work
15. Relocated Gas And Temporary Systems Installation
16. Role Of Company Inspector
17. Coordination With Gas Company

III - TECHNICAL SECTION

SECTION 6.01 - Trench Crossings; Support And Protection Of Gas Facilities And Services.
SECTION 6.02 - Extra Excavation For The Installation Of Catch Basin Sewer Drain Pipes With Gas Interferences.
SECTION 6.02.1 - Extra Excavation For The Installation Of Catch Basin Sewer Drain Pipes With Upstream Inverts Greater Than Six (6) Feet.
SECTION 6.03 - Removal Of Abandoned Gas Facilities. All Sizes.
SECTION 6.03.1 - Removal Of Abandoned Gas Facilities With Possible Coal Tar Wrap. All Sizes. (For National Grid Work Only)
SECTION 6.03.1a - Removal Of Abandoned Gas Facilities With Possible Coal Tar Wrap. All Sizes. (For Con Edison Work Only)
SECTION 6.04 - Adjust Hardware To Grade Using Spacer Rings/Adaptors. (Street Repaving.)
SECTION 6.05 - Adjust Hardware To Grade By Resetting. (Road Reconstruction.)
SECTION 6.06 - Special Care Excavation And Backfilling.
SECTION 6.06A - Special Care Excavation And Backfilling for Transmission Mains.
SECTION 6.07 - Test Pits For Gas Facilities.
SECTION 6.08 - "NO TEXT"

SECTION 6.09 - Trench Excavation and Backfill for New Gas Mains and Services (For National Grid Work Only)
SECTION 6.09a - Trench Excavation and Backfill for New Gas Mains and Services (For Con Edison Work Only)

IV - STANDARD SKETCHES; GAS COST SHARING WORK

NO. 1 - Support Requirements For Gas Mains And Services Crossing Excavation Greater Than 4'-0" Wide At Any Angle
NO. 1A - Support Requirements For Gas Mains Over 16" Diameter Up To And Including 48" Diameter Crossing Excavation At Any Angle
NO. 2 - Typical Methods Of Measurement For Gas Crossings
NO. 3 - Utility Crossings During Catch Basin Chute Connection Pipe Installation
NO. 4 - Utility Crossings During Catch Basin Chute Connection Pipe Installation (Extra Depth)
NO. 5 - Gas Main Encroachment On And/Or Parallel To Excavation Of Unsheeted Trench

V - PRELIMINARY GAS WORK TO BE PERFORMED BY FACILITY OPERATOR

VI - LISTING OF APPROXIMATE LOCATIONS OF EP-7 BID ITEMS QUANTITIES

I - NOTICE TO ALL BIDDERS; GAS COST SHARING WORK

All prospective bidders are hereby advised that, pursuant to the "Gas Facility Cost Allocation Act", ("the Act"), the City of New York has entered into an agreement ("the Agreement") with the gas companies (Con Edison or National Grid (formerly KeySpan Energy Delivery)) operating in their respective areas of the City to "share" the cost of facility relocation and/or support and protection of facilities disturbed by proposed water and/or sewer and related City work specified in this contract. Therefore, bid items, specifications and estimated quantities for the incremental costs of support and protection of certain gas facilities have been included in this contract. The low bid for this contract shall be determined by examining each bid for all work to be performed under this contract including any work of support and protection of gas facilities to be performed. The Contractor shall not seek additional compensation from gas companies except as specifically set forth in its contract.

II - GENERAL PROVISIONS; GAS COST SHARING WORK

1. General:

The Contractor shall perform City work with interferences from existing live and abandoned gas facilities. This shall be defined as utility work. Therefore, this contract includes bid items, specifications and estimated quantities designed to fully compensate him/her for the incremental costs of supporting, protecting, providing accommodations and, avoiding disturbing gas facilities located in the streets shown on the contract drawings. In the event that any other provisions of this contract related to gas facilities (or private utilities) conflict with these provisions, these provisions shall supersede and govern all work related to gas facilities owned by the companies operating in the project area. All utility work, as defined in these specifications, including changes and additions thereto shall be paid solely by the City except when specified otherwise in this contract. Contractor hereby agrees that the facility operator shall not be liable to pay him/her for any work performed including extra utility work. Contractor agrees that its bid prices include all compensation for loss of productivity and efficiency, idle time, delays (including any delays occasioned by negotiation of a contract change), change in operations, mobilization, demobilization, remobilization, added cost or expense, lost of profit, other damages or impact costs that may be suffered by or because of utility work, or the presence of gas facilities in the proximity of City work and that it will not seek additional compensation for these items. All disputes shall be resolved as specified in the contract.

Pursuant to the Act, Agreement, and the New York City Administrative Code, the gas company(ies) has been directed by the Commissioner and is required to perform all maintenance, repairs, replacement, shifting, alteration, relocation, and/or removal work that are not part of this contract. By having bid on this contract, the Contractor understands and agrees that the Commissioner has preasserted any right the City has to require, including the issuance of any directives or so called "order outs" under the New York City Administrative Code, any or all gas companies to maintain, repair, replace, protect, support, shift, alter, relocate, and/or remove all gas facilities that are about to be disturbed by the City contract work. The issuance of additional such directives during the performance of the contract work, where necessary in the sole judgment of the Commissioner, shall be initiated by such Commissioner as set forth in the relevant sections of the Act and Agreement. Contractor further agrees to insert such requirements as set forth herein above into any contracts with its approved subcontractors so that its subcontractors also understand and agree to such contract requirements.

2. Gas Interferences And Accommodations:

During the performance of sewer and water main work funded by the New York City Department of Environmental Protection (NYCDEP), as instructed by the Engineer, the use of any applicable contract bid item is allowed in order to resolve and accommodate all gas facilities interferences with such City work, including the removal of contaminated soil in associated trench excavation. This is in addition to the specified EP-7 bid items in the contract. Payment for such accommodation shall be funded by EP-7 bid item "UTL-GCS-2WS - GAS INTERFERENCES AND ACCOMMODATIONS" (F.S. Fixed Sum). The value of such accommodation shall be computed by multiplying the appropriate unit prices bid to the quantity of work performed, as determined by the Engineer, and applying the total amount thus to be paid

to EP-7 bid item "UTL-GCS-2WS - GAS INTERFERENCES AND ACCOMMODATIONS". When EP-7 bid item "UTL-GCS-2WS - GAS INTERFERENCES AND ACCOMMODATIONS" does not exist, such additional accommodation work shall be at no cost to the City but shall be a matter of adjustment between gas facility operator and Contractor. Private facilities, other than gas, that become in interference due to gas interferences accommodations shall also be accommodated, if so directed by the Resident Engineer, at no additional cost to the City and, provided that its owner agrees to be responsible for all additional costs to Contractor, otherwise, such facility shall be ordered by the City to be maintained, shifted, relocated or replaced by its owner at his/her expenses.

2a. Water Main Accommodations:

When water main construction is to be performed in this contract, Contractor shall be required, if warranted by field conditions, and at locations designated by the Resident or Borough Engineer, to change the vertical or horizontal alignment of water mains including but not limited to all additional labor, material, work method accommodations, furnishing, delivering and laying offset fittings and pipes, etc., necessary in order to complete water main installation and, avoid gas interferences in the project area, including street intersections. Typical work method accommodations shall include, but not be limited to, pier and plate, installation of filter fabric and select fill, etc. Such work shall be performed as directed by the Engineer and in accordance with contract specifications and latest edition of water mains standards and specifications.

2b.Sewer Accommodations:

When sewer construction is to be performed in this contract, Contractor shall be required, if warranted by field conditions, and at locations designated by the Resident or Borough Engineer, to change the horizontal alignment of sewer facilities (if possible) including but not limited to all additional labor, material, work method accommodations, furnishing, delivering and construction of additional manholes or modification of manholes/catch basins, extending chute connections, house connections, using alternate materials and methods, poured-in-place structures, etc., necessary in order to complete sewer installation and, avoid gas interferences in the project area, including street intersections. The term sewer facility shall include, but not be limited to, all sewer pipe and appurtenances, manholes, catch basins, catch basin chutes, etc. Such work shall be performed as directed by the Engineer and in accordance with contract specifications and latest edition of sewer standards and specifications.

3. Quantity Overruns, EP-7 Funded Bid Items:

~~No quantity overrun, in excess of one hundred twenty five (125) percent, shall be permitted for EP-7 funded bid items (gas) included in this contract, except when Resident Engineer determines that such overruns are caused by field modifications to planned City work, or approved construction methods, or contract scope changes. The Engineer will notify the gas facility operator in writing of overruns. The Contractor must invoice the gas facility operator for payment of all overruns, which will be paid by the gas facility operator at the contract bid price. Gas facility operator will be entitled to reimbursement by NYCDEP under established cost sharing procedures.~~

4. Changes And Extra Work:

This section is not applicable to work defined under "Emergency Reconstruction Contracts" or so-called "Where and When Contracts" since these projects, by definition, inherently encounter unanticipated gas facilities and cannot be pre-engineered. In all other cases, any contract changes proposed for City work shall also cover and include all associated changes to support and protection of gas facilities affected by such changes to City work. In all other cases where the Contractor finds that City work cannot be performed as planned and specified and/or, as approved because of a need to support, protect and/or alleviate interferences from gas facilities that were not listed and/or shown, or incorrectly shown in contract plans and specifications, he shall immediately notify the Resident Engineer and the facility operators' representative of his findings. Resident Engineer shall promptly examine such claims and determine whether or not such work is covered by contract bid items and /or specifications (contract bid items and specifications shall include city contract items as well as EP-7 items). The Resident Engineer shall also

examine the claim to determine if the application of EP-7 bid item "UTL-GCS-2WS - GAS INTERFERENCES AND ACCOMMODATIONS" is appropriate to resolve the claim. If upon examination, the Engineer determines that such field conditions were unanticipated (not shown and/or listed, or incorrectly shown in contract documents) and are not covered by bid items and contract specifications, he shall then direct the Contractor and the affected facility operator to negotiate the cost of supporting and protecting, and/or alleviating the impact on City work caused by such unanticipated gas facilities with each other with the understanding that the performance of City work shall continue during negotiations. If a cost agreement is reached, the Contractor and facility operator shall adjust such costs between themselves at no additional costs to the City contract. If the Contractor and affected facility operator do not reach an agreement concerning the price to be paid for the extra work within five (5) business days of the Engineer's directive to engage into such negotiations and, after considering: public safety and inconvenience, requirements of laws and regulations applicable to private utilities, integrity of all utility systems, including but not limited to sewer and water, gas, electric, telephone and, cable TV facilities, sound engineering practices, cost (long and short term) to all affected parties, and potential City work delays, then the Resident Engineer, depending on nature and severity of interferences with City work, shall either, direct the facility operator to relocate or replace its facilities at its own discretion and cost, reimbursable by NYCDEP under established gas cost sharing procedures or, direct the Contractor to perform the utility work on actual time, material and equipment costs basis pursuant to relevant contract requirements and amendments. Contract bid prices for any applicable items of work involved shall be applied, or converted to an allowance for time and material charges. Changes shall be for affected portions of utility work and, shall be processed with EP-7 funds.

5. Excavation:

All excavators shall notify the NYC/LI One Call Center at 1-800-272-4480 at least two (2) working days, not including the day of the call, but not more than ten (10) working days in advance of the start of any excavation work. The gas company(ies) will mark out its facilities within the project limits and provide Construction Inspector(s) during all excavation work in close proximity (within twelve (12) inches) to gas facilities. The Contractor shall exercise extreme caution when excavating in the vicinity of any gas facilities. Hand excavation shall be performed within twelve (12) inches of gas facilities. The Contractor prior to excavating underneath these facilities shall adequately support all gas facilities. Standard support details for gas facilities have been included in the specifications. Any damage to gas facilities shall be reported immediately to the gas company(ies). The Contractor shall be responsible for all cost associated with repairs made necessary by damages caused by his operations.

6. Backfilling And Street Restoration:

Backfilling operations and street restorations shall be in accordance with contract requirements.

7. Non-Responsive Bids:

(THIS SECTION IS NOT APPLICABLE FOR THIS CONTRACT)

~~Every gas (EP-7) bid item has a suggested "Not less than" value per unit indicated on contract bid sheet. Bids resulting in cost of less than suggested for EP-7 items are hereby prohibited and if submitted shall be considered NON-RESPONSIVE.~~

8. Minimum Clearances:

Clearance requirements for City work shall govern and supersede any clearance requirement of gas facility operator. Therefore, a minimum of twelve (12) inches clearance between private utilities and City water mains, sewers or related structures to be installed in this contract shall be maintained. When this clearance is not attainable, the Resident Engineer may allow a minimum of four (4) inches clearance. With less than twelve (12) inches clearance a neoprene/polyethylene shield (to be provided by facility operator) shall be installed as part of all work item specifications. However, if Resident Engineer determines that City work cannot be performed within allowable clearance and no reasonable City accommodation (no-cost change to City work) is possible, the City shall direct the facility operator to remove, relocate, shift, or alter their facility(ies) pursuant to the New York City Administrative Code.

9. Work By Facility Operator:

The facility operator may find it necessary to perform the following types of work during performance of City work: accommodating a contractor's request for gas facilities modifications (in order to facilitate City contractor's proposed construction method) or, remedial and emergency work on gas facilities proper with their own resources and materials if an approved method of construction for City work causes unanticipated disturbances to gas facilities or, replacing defective gas facilities when they are exposed by the Contractor and their actual conditions are observable by the facility operator. Also included in the above category of defective gas facilities are: the presence of environmental contaminants attributable to the gas facility in or around gas facilities. If such work is deemed required by the facility operator or if facility operator is directed by the City to address such deficiencies at any time during the course of construction, the Contractor shall modify the construction schedule at no cost to the City and allow the facility operator five (5) business days to perform such work without interferences. Additional costs to the facility operator (in cases of accommodations) or, Contractor (in cases of defective gas facilities) due to such gas work, if any, shall be the responsibility of the parties involved and not of the City. Such costs shall be a matter of adjustment between the Contractor and the facility operator.

10. Materials Furnished By Facility Operator:

It shall be the Contractor's responsibility to inspect material to be installed by him immediately upon delivery and advise the facility operator through its authorized representative, of all damaged materials. The Contractor at no additional costs to the City or the facility operator shall replace any material that is damaged or lost after the Contractor's inspection.

11. Liability And Insurance:

Notwithstanding the provisions of this contract, the existing division of liabilities to third parties shall remain the same as between the City and the company. Therefore, it is specifically agreed by the City, company and Contractor (by bidding on this contract) that for the purpose of any liabilities to third parties, that the City contractor performing work directly and physically relating to gas company facilities in this project, shall be deemed an agent of the company and not an agent of the City, the New York City Municipal Water Finance Authority, or the New York City Water Board. Contractor shall include the company as an additional insured on all insurance policies maintained to comply with the City's insurance requirements.

12. Width And Depth Of Excavation:

Contractor shall not be authorized to deliberately change trench or excavation widths and/or depth specified without Engineer's approval. Enlargement of any side of excavation up to eighteen (18) inches beyond pay limits (or inside face of sheeting) requested by the Contractor for the installation of certain types of sheeting may be granted. However, such enlargements or those greater than allowable shall not be approved when, in the sole judgment of the City, field conditions allow the water mains and sewer work to be performed within the limits specified and, the sole purpose of such enlargement request is to impact adjacent utilities (public or private) whose support and protection are part of this contract. Any approval shall be given at no additional cost to the City contract, including EP-7 funding, and all costs associated with unauthorized enlargements shall be the sole responsibility of the Contractor.

13. Depth And Crossing Angles Of Gas Facilities:

Where gas facilities are shown (or specified as) crossing proposed alignment of sewers, water mains, catch basins and chute connections or any other proposed excavations at specific angles (as measured off plans or sketches or specified in contract), it shall be understood that actual field measurements may deviate (plus or minus) forty-five (45) degrees from those shown or specified. The cover, or depth from street surface to top of facilities, shall be as shown or specified in contract documents, no deviation is to be assumed. Where gas facilities are not shown on contract documents, but their support and protection are otherwise included in this contract then, all references to facilities crossing at "various angles and depth" in the gas sections shall mean that such facilities are crossing sewer, water, catch basin and, catch

basin chute, and other excavations at a ninety (90) degree angle to the proposed sheeting line or side of excavation (for unsheeted trenches) with an allowable deviation of forty-five (45) degrees in any direction, except for catch basin chute excavation where the allowable deviation shall be sixty (60) degrees. Where the cover is not noted or specified, the bottom face of such facilities shall be assumed to be crossing catch basin chutes at a depth of three (3) foot eight (8) inches or less from the street surface. Paragraph No. 2 above shall apply in cases of distribution water main construction. Appropriate bid items and specifications are provided for cases where angle and depth are greater than stated above. This section also applies to work defined in “Emergency Reconstruction Contracts” or so-called “Where and When Contracts”. These contracts are not pre-engineered and consequently have no drawings, sketches or determined locations and so, gas facilities encountered will be crossing existing and proposed sewer, water, catch basin/catch basin chutes and all appurtenances at various angles and depths.

14. Maintenance Of Traffic For Gas Work:

All work pertaining to gas bid items and specifications shall be performed within the contract maintenance of traffic plan as specified in the contract document. The bid price for the Maintenance and Protection of Traffic shall cover all work pertaining to gas items. The City shall make compensation for additional maintenance and protection of traffic items in connection with gas item of work only when such additional work is deemed reasonable and necessary by the Resident Engineer and is approved by him prior to its performance.

15. Relocated Gas And Temporary Systems Installation:

In cases where the Contractor is allowed to select the location for temporary construction such as, installation of dewatering headers, wells, well points, etc., he shall not disturb any gas facilities shown on sketches provided in this section. The only exception shall be, if the affected gas company agrees to such relocation and provided that the cost of such relocation is a matter of adjustment between the company and Contractor, and at no cost to the City.

16. Role Of Company Inspector:

In any case in which the City elects to perform some or all support and protection work with its own employees, personnel or contractors, the facility operator shall provide onsite inspectors to approve and certify such support and protection work (exclusive of City accommodations) performed by the City's own employees, personnel, and contractors. Facility operator’s inspectors are not authorized to direct City contractor during the performance of contract work. They shall act through the City Resident Engineer and provide him/her required approvals and certifications, prior to preparing partial payments of EP-7 items, in a format and frequency to be prescribed by the appropriate City Head of Construction.

17. Coordination With Gas Company:

The Contractor shall be required to notify the gas company(ies), in writing, at least two (2) weeks prior to the start of final paving in order to allow companies to complete any unfinished gas work located within the area to be paved. Every effort shall be made to maintain gas service with minimum inconvenience to the public.

III - TECHNICAL SECTION

SECTION 6.01 - Trench Crossings; Support And Protection Of Gas Facilities And Services.

1. Description:

Under this section, the Contractor shall provide all labor, materials, equipment, and incidentals required to support and/or protect the integrity of gas mains, services and appurtenances of any sizes, configurations, and operating pressures crossing trench excavations above subgrade for planned construction of sewers and water mains facilities. A gas service shall be defined as a gas pipe of three (3) inches in diameter or

less branching from the main to a customer pick up point or property valve box. A gas main may be any size pipe that is part of a distribution or transmission network other than services described above. Crossings shall be defined as gas facilities spanning the width of excavation (one side to the other side). These crossings may be at various angles and depth as shown on “Gas Cost Sharing Work Standard Sketches Nos. 1 and 1A”, and as specified in “General Provisions; Gas Cost Sharing Work Paragraph No. 13” and, at the locations shown or listed in contract documents. The gas company operating in the area, (facility operator), owns these facilities. The work shall be performed in accordance with contract specifications, plans, and at the directions of the Resident Engineer in consultation with the authorized representatives of the facility operator.

2. Method Of Construction:

A. Protection: In general, the gas facilities shall be protected as required by New York State Industrial Code 753. In particular, the Contractor shall use hand excavation methods (pick and shovel or hand held power tools) directly below the pavement base to expose the gas facilities (marked out by facility operators) and to ascertain the clearances and cover of the facilities with respect to the proposed excavation. Upon exposing the affected facilities sufficiently, at the discretion of the Resident Engineer, to ascertain the foregoing, Contractor shall be permitted to proceed with a combination of hand and machine excavation, as appropriate, outside a zone of protection whose limit shall be defined as a perimeter located twelve (12) inches from the outside face of each gas facility crossings (See “Gas Cost Sharing Work Standard Sketch No. 2”). If the facilities are in direct interference with City work, meaning that “Minimum Clearances” described in “General Provisions; Gas Cost Sharing Work Paragraph No. 8” cannot be maintained, and excavation has to be temporarily or permanently abandoned then this particular location shall become a test pit and dealt with as specified in Section 6.07, and “General Provisions; Gas Cost Sharing Work Paragraphs Nos. 2 and 8”.

B. Support: Gas mains or services crossing excavations equal or less than four (4) feet wide are generally self supporting, unless field conditions as determined by the Resident Engineer require otherwise. The support requirements for gas mains and services crossing excavations greater than four (4) feet wide shall be as shown on the attached “Gas Cost Sharing Work Standard Sketch No. 1” and Contractor shall use sheeting methods that permit the maintenance of gas facilities in their existing locations and configurations. Alternate methods equivalent to those shown on the sketch or accommodations by the facility operator proposed by the Contractor in order to facilitate the execution of the specified work shall be allowable, provided that prior approval is obtained by the Contractor from the Engineer and the facility operator. The support and protection of gas facilities crossings shown on plans, drawings, listings or otherwise identified in this contract shall not be circumvented with the issuance of so called "order outs".

3. Method Of Measurement:

The Contractor shall be paid for supporting and/or protecting gas facilities crossing trench excavations under the appropriate bid items covered by this section. The Contractor shall be directly responsible to the facility operator for the total cost of using any alternate method requiring the use of resources owned by the facility operator. Regardless of the method used, the City shall pay the bid price for the appropriate support and/or protect item of work. The average rate charged by the facility operator for alternate support and protection work such as, disconnecting and reconnecting gas services is listed in attached “Schedule GCS-A”.

4. Payment Restrictions:

These items shall not be paid for: gas services crossing unsheeted water main trench excavation; abandoned gas main/services identified by facility operator; gas mains/services crossing trench excavations for fire hydrant branch connections pipes, catch basins and/or chutes (sewer drain pipe), house sewer and/or water services; gas facilities encroaching any face of excavation for sewer and/or water construction, all of which are covered under other contract sections. Also this item shall not be paid for new gas mains and services crossing water trenches when trenching for such new facilities has been performed by the Contractor in common with trench excavation for City work (overlapping trench limits).

The cost of supporting and protecting such gas facilities crossings shall be deemed included in the cost of trench excavation for the new gas facilities. This payment restriction shall apply even if such common trench gas excavation is not part of the contract. The prices bid for items covered by this section represent full compensation to Contractor to completely perform the work described. No other bid items shall be combined with these items in order to pay for gas main and/or services crossing excavations specified herein.

5. Method Of Payment:

Each (Ea.) gas facility crossing trench excavation as described in these specifications shall be counted for payment.

6. Price To Cover:

The cost of timber/steel supports installed for gas facilities shall be included in the bid price. The bid price for each crossing shall also cover all additional supervision, labor, material (except those provided by the facility operator), equipment and insurance necessary to completely maintain the gas facilities without disruption of service to the customers and in accordance with contract plans, specifications and facility operator standards. The price shall also include: changes of method of operations; sheeting modifications where necessary to accommodate the gas facilities crossings; installation and removal of water pipe under gas facilities (so called "snaking"); extra care during excavation (including hand excavation under existing single and multiple gas facilities); extra backfilling and compaction around, over and under gas facilities; installation and removal of sheeting around gas facilities; associated maintenance and protection of traffic; barricades; and traffic plates that may be required to temporarily close and/or complete the work.

SECTION 6.02 - Extra Excavation For The Installation Of Catch Basin Sewer Drain Pipes With Gas Interferences.

1. Description:

Under this item, the Contractor shall provide all labor, materials, equipment, insurance, and incidentals for the extra excavation associated with the installation of catch basin sewer drain pipes (chute) under gas facilities of various sizes crossing the trench excavation at various angles and depth at the locations shown in the contract documents and also, for the support and protection of these facilities during associated excavation and backfill operations. The gas company operating in the area, (facility operator), owns these facilities.

2. Method Of Measurement:

The bid price shall be per location (Each) where extra excavation is required when catch basin sewer drain pipes are installed at an upstream invert depth lower than four (4) feet (up to a maximum of six (6) feet) from the proposed pavement grade because the bottom faces of interfering gas mains and appurtenances are located at a depth greater than three (3) foot eight (8) inches from proposed pavement surface (See “Gas Cost Sharing Work Standard Sketch No. 4”).

3. Method Of Construction:

Incremental cost responsibility for chute excavation is determined by the first private facility encountered starting from catch basin structure proper and that prevents the installation of the chute connection at an upstream cover less than or equal to three (3) feet or any other minimum cover required to avoid City facilities (e.g. water, sewer, etc.) as directed by the Resident Engineer.

4. Payment Restrictions:

This item shall not apply and related bid item shall not be paid in cases where:

A. Upstream invert chute is more than six (6) feet deep because of gas facilities.

B. Chute cannot be installed above existing gas facilities because of interferences with other private facilities that are not otherwise covered under this contract, regardless of upstream invert depth.

The above cases shall be at no cost to the City, but shall be a matter of adjustment between the Contractor and the facility operator(s).

5. Price To Cover:

The bid price shall cover the additional cost of all additional supervision, labor, materials, equipment and insurance, to complete the installation of catch basins and associated sewer connections in accordance with the contract plans and specifications. The price shall include: excavation by hand around and under single and multiple gas facilities; locating, supporting and protecting gas facilities; backfilling and all other items necessary to perform all work incidental thereto including: installation and removal of drain pipe under gas facilities ("snaking"); widening of trenches to facilitate the above work; subsequent additional backfill and pavement restoration; modifying precast catch basin window to accommodate connection; changing sheeting method and configuration to accommodate gas facility crossings; maintenance and protection of traffic; barricades; and installation of traffic plates that may be required to temporarily close and/or complete the work. The price shall not include removal of ledge rock and/or excavation of boulders in open cut.

SECTION 6.02.1 - Extra Excavation For The Installation Of Catch Basin Sewer Drain Pipes With Upstream Inverts Greater Than Six (6) Feet.

1. Description:

Under this item, the Contractor shall provide all labor, materials, equipment, insurance and incidentals for the extra excavation of catch basin chutes where the upstream invert is greater than six (6) feet under gas facilities of various sizes crossing the trench excavation at various angles and depth at the locations shown in the contract documents or as determined by field conditions and also, for the support and protection of these facilities during the associated excavation, sheeting and backfilling operations.

2. Method Of Measurement:

The bid price shall be per location (Each) where extra excavation and sheeting is required when the catch basin chute installed at an upstream invert depth lower than six (6) feet from the proposed pavement grade because the bottom faces of the interfering gas mains and appurtenances are located at a greater depth than three foot eight inches from the proposed pavement surface only.

3. Method Of Construction:

Incremental cost responsibility for chute excavation is determined by the first private facility encountered during such excavation when initiated from catch basin structure and that prevents the installation of the chute at an upstream cover less than or equal to three (3) feet or any other cover required to avoid City facilities as directed by the Resident Engineer.

4. Payment Restriction:

This item shall not apply and related bid item shall not be paid in cases where:
Upstream invert chute is less than or equal to six (6) feet deep because of gas facilities. Section 6.02 shall be paid.

5. Price To Cover:

The bid price shall cover the additional cost of all supervision, labor, materials, equipment and insurance to complete the installation of catch basin and associated sewer connections in accordance with the contract plans and specifications. The price shall include: excavation by hand around and under single and multiple gas facilities; locating, supporting and protecting gas facilities incidental thereto; widening of trenches to facilitate the above work; subsequent additional backfilling and pavement restoration; modifying pre-cast basin window to accommodate connection; the installation of catch basin with deeper sumps as specified; additional sheeting and changes in sheeting method and configuration to accommodate gas facility crossings; maintenance and protection of traffic; barricades; and installation of traffic plates that may be required to temporarily close and/or complete the work.

SECTION 6.03 - Removal Of Abandoned Gas Facilities. All Sizes.

1. Description:

Under this section the Contractor shall provide all labor, materials, equipment, insurance and, incidentals required for the removal of abandoned gas mains, services, or appurtenances thereof, located within the street shown on the contract plans, owned by gas company operating in the project area (facility operator), used or to be used for or in connection with or to facilitate the conveying, transportation, distribution or furnishing of gas (natural or manufactured or mixture of both) for light, heat, or power, but does not include property used solely for or in connection with business of selling, distributing or furnishing of gas in enclosed containers. Such removal shall include only abandoned gas facilities that interfere with (i.e. cause additional work) City work.

2. Determination Of Operating Status Of Gas Facilities:

The Contractor shall notify facility operator, as required by New York State Industrial Code 753. Gas facilities shall not be removed without the approval of the facility operator whose authorized representative shall certify in writing (specific facility or area wide facilities certification) and in a timely manner acceptable to the Resident Engineer that abandoned facilities are free of combustible gas and any other environmental contaminants prior to removal. The Resident Engineer shall rely on facility operator's certification. The facility operator may request the excavation of test pits (See Section 6.07) for this determination ahead of City work and, Contractor shall provide safe access, facilitate and permit facility operator to enter test pit excavations for the purpose of testing gas facilities to be removed by the Contractor. However, facility operator may prefer to make this test during performance of City work, in order to issue the above certification. This shall be permitted provided that it is agreed that additional costs, if any resulting from this choice shall be a matter of adjustment between the Contractor and facility operator only, and at no cost to the City.

3. Restrictions:

The facility operator shall be solely responsible for its contaminated gas facilities, surrounding contaminated soil and their disposal and abatement procedures, unless contract bid items are applicable and provided for such work. In such cases, the quantity removed shall be charged to EP-7 bid item "UTL- GCS-2WS - GAS INTERFERENCES AND ACCOMMODATIONS" at the City bid prices.

4. Method Of Measurement:

Abandoned gas pipeline removal shall be measured for payment per linear foot of pipe and appurtenances removed.

5. Price To Cover:

The price shall cover all additional cost of supervision, labor, materials, equipment, and insurance necessary to complete this work in accordance with the contract plans and specifications, including

excavation by hand around and under other City and facility operator owned properties and, where necessary, support and protection of such properties. The price shall also cover breaking, cutting, and/or burning of abandoned gas pipes and their disposal from the site; sealing open ends remaining in the excavation with concrete or caps (caps to be provided by the facility operator) and backfilling of the area where the pipeline has been removed with clean backfill. The price shall also include any required dump charges. This item does not include any type of extra excavation, backfilling, compaction, pavement removal and restoration associated with abandoned gas facilities removal, all of which are covered under Section 6.06.

SECTION 6.03.1 - Removal Of Abandoned Gas Facilities With Possible Coal Tar Wrap. All Sizes. (For National Grid Work Only)

1. Description:

Under this section the Contractor shall provide all labor, materials, equipment, insurance and, incidentals required for the removal of abandoned gas mains, services or appurtenances thereof, located within the street shown on the contract plans, owned by the gas company operating in the project area (facility operator), used or to be used for or in connection with or to facilitate the conveying, transportation, distribution or furnishing of gas (natural or manufactured or mixture of both) for light, heat, or power, but does not include property used solely for or in connection with business of selling, distributing or furnishing of gas in enclosed containers. Such removal shall include only abandoned gas facilities that interfere with (i.e. cause additional work) City work. These gas facilities may be coated with Coal Tar Wrap and so, may require special handling and disposal methods as specified in National Grid Standard Operating Procedure 12-2, Coal Tar Wrap Handling and 12NYCRR56.

2. Determination Of Operating Status Of Gas Facilities:

The Contractor shall notify facility operator, as required by New York State Industrial Code 753. Gas facilities shall not be removed without the approval of the facility operator whose authorized representative shall certify in writing (specific facility or area wide facilities certification) and in a timely manner acceptable to the Resident Engineer that abandoned facilities are free of combustible gas and any other environmental contaminants prior to removal. The Resident Engineer shall rely on the facility operator's certification. The facility operator may request the excavation of test pits (See Section 6.07) for this determination ahead of City work and, the Contractor shall provide safe access, facilitate and permit facility operator to enter test pit excavations for the purpose of testing gas facilities to be removed by the Contractor. However, the facility operator may prefer to make this test during performance of City work, in order to issue the above certification. This shall be permitted provided that it is agreed that additional costs, if any, resulting from this choice shall be a matter of adjustment between the Contractor and the facility operator only, and at no cost to the City contract. Should such investigation result in the determination that the abandoned gas facilities do not contain Coal Tar Wrap then the removal of said facilities shall be covered under separate item (See Section 6.03).

3. Requirements:

The City Contractor shall excavate abandoned gas facility sufficiently, either in its entirety, or at locations determined by Contractor to allow the removal of Coal Tar Wrap (if present on the abandoned gas facility) and to facilitate the safe extraction of manageable lengths of abandoned pipe without damage to adjacent facilities, utilities or City structures either parallel to or crossing above or below abandoned gas facility. The Contractor is to allow access to the designated cutting points within the Contractor's trench by authorized National Grid personnel who will remove the Coal Tar Wrap as per National Grid procedures. This work by National Grid personnel shall be performed in a timely fashion and shall not unduly impede the Contractor's progress and/or productivity. Upon completion of the coating removal, the Contractor shall be allowed to cut, burn or grind the gas facility and remove the section of abandoned pipe. The Contractor at a site designated by the Contractor shall stockpile the removed pipe. The facility operator will be responsible to provide trucking and disposal services with its own personnel and shall remove the stockpiled pipes during off hours or during such time as agreed to by the Contractor. Since the pipe

removed will remain the property of the facility operator and is to be disposed of by the facility operator, the facility operator shall be responsible for any required notifications, filings, dump charges and incidentals associated with the disposal of abandoned gas facilities found to contain Coal Tar Wrap.

4. Method Of Measurement:

Abandoned gas pipeline removal shall be measured for payment per linear foot of pipe and appurtenances removed.

5. Price To Cover:

The price shall cover all additional cost of supervision, labor, materials, equipment and insurance necessary to complete this work in accordance with the contract plans and specifications, including excavation by hand around and under other City and facility operator owned properties and, where necessary, the support and protection of such properties. The cost shall also include hand excavation in the area(s) of proposed abandoned pipe cut(s), cutting and/or burning of abandoned gas pipes and stockpile of removed sections of abandoned pipe and associated maintenance and protection of traffic, blocking and temporary fencing if required. The unit price shall also cover sealing open ends remaining in the excavation with concrete or end caps (end caps to be provided by the facility operator) and backfilling of the area where the abandoned pipeline has been removed with clean backfill material. This item does not include any type of extra excavation, backfilling, compaction, pavement removal and/or restoration (temporary and permanent) associated with abandoned pipe removal ("lost trench"), all of which are covered under separate Section 6.06. The price shall also include allowance for any loss of productivity by the Contractor due to required facility operator work to remove pipe coating and prepare pipe for cutting as well as any change in Contractor's excavation method, additional trucking and/or stockpiling costs.

SECTION 6.03.1a - Removal Of Abandoned Gas Facilities With Possible Coal Tar Wrap. All Sizes. (For Con Edison Work Only)

1. Description:

Under this section the Contractor shall provide all labor, material, equipment, insurance and, incidentals required to prepare abandoned gas mains, services and appurtenances thereof located within the street shown on contract plans, owned by the gas company operating in the project area (facility operator), for removal due to interference with proposed City work. These abandoned gas facilities were, at one time, used for or in connection with or to facilitate the conveying, transportation, distribution or furnishing of gas (natural, manufactured or a combination of both) for light, heat, or power, but does not include property used solely for or in connection with business of selling, distribution or furnishing of gas in enclosed containers. Such preparation for removal shall include only abandoned gas facilities that interfere with (i.e. cause additional work) City work. These gas facilities may be coated with Coal Tar Wrap which may contain asbestos or PCB's and so, may require special handling and disposal methods as specified in Con Edison - ASBESTOS MANAGEMENT MANUAL, CHAPTER 6 - ASBESTOS WORK PROCEDURES, SECTION 06.04 - COAL TAR WRAP REMOVAL. For under 25' (feet) in length and an approved NYC-DEP variance for over 25' (feet).

2. Determination Of Operating Status Of Gas Facilities:

The Contractor shall notify facility operator, as required by New York State Industrial Code 753. Gas Facilities shall not be removed without the approval of the facility operator whose authorized representative shall certify in writing (specific facility or area wide facilities certification) and in a timely manner acceptable to the Resident Engineer that abandoned facilities are free of combustible gas and any other environmental contaminants prior to removal. The Resident Engineer shall rely on the facility operator's certification. The facility operator may request the excavation of test pits (See Section 6.07) for this determination ahead of City work and Contractor shall provide safe access, facilitate and permit facility operator to enter test pit excavations for the purpose of testing gas facilities. However, the facility operator may prefer to make this test during performance of City work in order to issue the above

certification. This shall be permitted provided that it is agreed that additional costs, if any, resulting from this choice shall be a matter of adjustment between the Contractor and the facility operator only, and at no cost the City contract. Should such investigation result in the determination that the abandoned gas facilities do not contain Coal Tar Warp then the removal of said facilities shall be covered under separate item (See Section 6.03).

3. Requirements:

The Contractor shall excavate abandoned gas facility sufficiently, either in it's entirety, or at locations determined by Contractor to allow the removal of Coal Tar Wrap (if present on the abandoned gas facility) and to facilitate the safe extraction of manageable lengths of abandoned pipe without damage to adjacent facilities, utilities or city structures either parallel to or crossing above or below abandoned gas facility. The Contractor is to allow access to the designated cutting points within the Contractors trench by authorized Con Edison personnel who will remove the Coal Tar Wrap as per Con Edison and/or NYC-DEP approved procedures. This access shall conform to all applicable codes, rules & regulations. This work by Con Edison personnel shall be performed in a timely fashion and shall not unduly impede the Contractors progress and/or productivity. Upon completion of the coating removal, the Contractor shall be allowed to cut, burn or grind the gas facility and remove the section of abandoned pipe. Contractor shall designate a specific site to stockpile those removed pipes. The facility operator will be responsible to provide trucking and disposal services with its own personnel and shall remove the stockpiled pipes during off hours or during such time as agreed to by the Contractor. Since the pipe removed will remain the property of the facility operator and is to be disposed of by the facility operator, the facility operator shall be responsible for any required notifications, filings, dump charges and incidentals associated with the disposal of abandoned gas facilities found to contain Coal Tar Wrap.

4. Method Of Measurement:

Abandoned gas facility removal shall be measured for payment per linear foot of pipe and appurtenances removed.

5. Price To Cover:

The price shall cover all additional cost of supervision, labor, materials, equipment and insurance necessary to complete this work in accordance with the plans and specifications, including, but not limited to, excavation by hand around and under other City and facility operator owned properties and, where necessary, the support and protection of such properties. The cost shall also include hand excavation in the area(s) of proposed abandoned pipe cut(s), cutting and/or burning of abandoned gas pipes and stockpile of removed sections of abandoned pipe and associated maintenance of traffic, blocking and temporary fencing if required. The unit price shall also cover sealing open ends remaining in the excavation with concrete or end caps (end caps to be supplied by facility operator) and backfilling of the area where the abandoned pipeline has been removed with clean backfill material. This item does not include any type of extra excavation, backfilling, compaction, pavement removal and/or restoration (temporary and permanent) associated with abandoned pipe removal ("lost trench"), all of which are covered under separate Section 6.06. The price shall also include allowance for any loss of productivity by the Contractor due to required facility operator work to remove pipe coating and prepare pipe for cutting as well as any change in Contractor excavation method, additional trucking and/or stockpiling costs.

SECTION 6.04 - Adjust Hardware To Grade Using Spacer Rings/Adaptors. (Street Repaving.)

1. Description:

Under this section, the Contractor shall provide all labor, supervision, materials, equipment, insurance and incidentals required to adjust to final grade gas street surface hardware located within the contract area boundaries shown on the plans. The gas company operating in the area, (facility operator), owns these facilities. The work shall be performed in accordance with the contract plans, specifications and at the directions of the Resident Engineer in concurrence with authorized representative of the facility operator.

2. Materials:

The facility operator shall furnish and deliver all prefabricated hardware parts required. These include adaptors for the grade adjustment proper and new street hardware if existing ones are found to be defective, all in accordance with the facility operator standards and City rules and regulations. The Contractor shall notify the facility operator of the installation schedule at least three (3) business days before materials are required on the site. Should the facility operator fail to deliver the necessary material according to any schedule mutually agreed upon by the Contractor and facility operator, the City shall not be responsible for any delays attributable thereto, nor for the failure of delivery of such materials. On project where material storage is not permitted on site, the facility operator shall deliver the required material to the Contractor's yard and it shall be the Contractor's responsibility to transport the material to the work site when needed for installation. It shall also be the Contractor's responsibility to inspect the materials to be installed by him immediately upon delivery and advise the facility operator through its authorized representative, of all damaged materials. The Contractor at no additional expense to the City or the facility operator shall replace any material that is damaged or lost after the Contractor's inspection.

3. Method Of Measurement:

The Contractor shall be paid for each six (6) inch round box and/or nine (9) inch square box adjusted to grade regardless of adjustment height requirements.

4. Price To Cover:

The unit price bid for this item shall include all additional labor, supervision, insurance, equipment and, material (except those to be provided by the facility operator), required to adjust each box to grade as required in the contract plans and specifications. The bid price shall also include the removal of existing frames and covers from existing facilities to be salvaged and returned to the facility operator and, all material transportation from the Contractor's material storage yard to the work site. In addition the bid price shall include "chipping" around existing box using appropriate means and methods where grinding is required.

SECTION 6.05 - Adjust Hardware To Grade By Resetting. (Road Reconstruction.)

1. Description:

Under this item, the Contractor shall provide all labor, supervision, materials, equipment, insurance and incidentals required to adjust to the proposed grade gas street surface hardware located within the contract area boundaries shown on the plans. The gas company operating in the area, (facility operator), owns these facilities. The work shall consist of either building up or lowering or resetting the casting by removing the existing frame and cover building up or decreasing the existing installation, replacing the frame and/or cover if damaged or worn out, as determined by the Resident Engineer, with a new frame and/or cover furnished by the owner, and setting the frame and cover to new elevation. The work shall be performed in accordance with the contract plans, specifications and at the directions of the Resident Engineer.

2. Materials:

The facility operator shall furnish and deliver all new hardware parts required. The Contractor shall furnish materials such as mortar, bricks and concrete in compliance with contract requirements. At locations where high-early strength concrete is required under this contract to be placed adjacent to gas facilities, then the requirement for concrete shall be high-early strength complying with the current New York State Department of Transportation, Standard Specifications for Class F concrete. Existing castings may be replaced as required and deemed necessary by the Engineer and by City rules and regulations. The Contractor shall install the new castings of various sizes furnished by the facility operator. The Contractor shall notify the facility operator of the installation schedule at least three (3) business days before materials are required on the site and, shall provide off-loading services to the facility operator. Should the facility operator fail to deliver the necessary material according to any schedule mutually agreed upon by

the Contractor and facility operator, the City shall not be responsible for any delays attributable thereto, nor for the failure of delivery of such materials. Such delays shall be a matter of adjustment between the Contractor and the facility operator. On project where material storage is not permitted on site, the facility operator shall deliver the required material to the Contractor's yard and it shall be the Contractor's responsibility to transport the material to the work site when needed for installation. It shall also be the Contractor's responsibility to inspect the materials to be installed by him, immediately upon delivery and advise the facility operator through its authorized representative, of all damaged materials. The Contractor at no additional expense to the City or the facility operator shall replace any material that is damaged or lost after the Contractor's inspection.

3. Methods Of Construction:

The Contractor shall remove and reinstall existing castings or install new castings to the proposed grade. Setting and resetting the castings shall be done with mortar and brick according to the standards of the facility operator. Work shall be performed in a workmanlike manner. Castings that are deemed unacceptable for resetting shall remain the property of the facility operator and he shall be responsible for their removal and proper disposal from site. No traffic shall be allowed on adjusted street hardware until permitted by the Engineer.

4. Method Of Measurement:

The Contractor shall be paid for each gas hardware adjusted to grade regardless of size or adjustment height requirements (up or down).

5. Price To Cover:

The unit price bid for this item shall include all additional labor, supervision, insurance, equipment and, material (except those to be provided by the facility operator), required to adjust each gas hardware to grade as required in the contract plans and specifications. The bid price shall also include the removal of existing frames and covers from existing facilities; building up the existing installations with bricks and mortar, or lowering the existing installation by removing bricks and mortar; replacing damaged frames and/or covers with new frames and/or covers furnished by the facility operator; setting the frames and covers to the new elevations; protect existing installations; repair minor structural damages to existing installations prior to resetting frames; unloading of furnished castings at the Contractor's yard and transporting castings from the Contractor's yard to the job site as required; completing the work in accordance with the contract plans, specifications and, at the directions of the Engineer. In addition the bid price shall include "chipping" around existing gas facilities using appropriate means and methods where grinding is required.

SECTION 6.06 - Special Care Excavation And Backfilling.

1. Description:

Under this section, the Contractor shall provide all labor, materials, equipment, insurance and incidentals required to support and protect the integrity of live gas facilities including mains, services, related structures and appurtenances during excavations. The gas company operating in the area, (facility operator), owns these facilities. The work shall be performed in accordance with the contract plans, specifications and at the directions of the Resident Engineer in consultation with authorized representatives of the facility operator.

2. Applicability Of Section:

This section shall apply to live gas facilities of various sizes located within two (2) feet of any face of unsheeted excavation, (unsheeted excavation refers to any excavation performed for city work and includes excavations performed that are to be subsequently sheeted using approved methods) and paralleling or, encroaching any face of excavation. Also, for crossings greater than forty-five (45) degrees and/or located at a cover depth greater than five (5) feet from existing street surface. Parallel facilities are not exposed at

any time during excavation (See “Gas Cost Sharing Work Standard Sketch No. 5”). Encroaching facilities are partially exposed inside the limit of excavation (See “Gas Cost Sharing Work Standard Sketch No. 5”). This section shall also apply to gas facilities crossing catch basins excavation, and catch basins sewer connections (chutes) trench excavation only when extra depth (covered in other section), is not required for chutes installations because of such utilities interferences (See “Gas Cost Sharing Work Standard Sketch No. 3”). This section shall also apply to gas services (if shown or otherwise listed in contract documents) crossing unsheeted excavations for water mains, gas facilities crossing fire hydrant branch connections, house sewer and/or water service connections excavations. This section shall also apply for so called “loss trench”, as described further, and for additional excavation (pavement and/or soil), backfilling, compaction, roadway base and pavement restoration due to abandoned gas facilities, only if removed by Contractor. If operating status of gas facilities cannot be determined prior to excavation then such facilities shall be considered live and this section shall fully apply. The excavation around fully exposed live gas facilities along and within limits of excavation (not crossings) shall be covered by this section also (not shown on “Gas Cost Sharing Work Standard Sketch No. 5”), however the support requirement, if any is required, of such facilities is beyond the scope of these specifications and therefore shall be the responsibility of facility operator to determine and prescribe, at no cost to the City contract, but shall be a matter of adjustment between the Contractor and facility operator.

3. Payment Restriction:

No special care excavation shall be paid for abandoned gas facilities paralleling and/or encroaching excavation and therefore are not in direct interference with City work. Except as allowed in this section, the bid item specified under this section shall not be used in combination with items covered under other sections for work done due to a particular gas facility. This item shall not be paid for new gas facilities when trenching for such new facilities has been performed by the Contractor of record in common with trench excavation for City Work (overlapping trench limits). The cost of excavating with care as defined in this section shall be deemed included in the cost of trench excavation for the new gas facilities. This restriction shall apply even if such gas common trench excavation is not part of the contract. If facilities are in direct interference with City work, meaning that “Minimum Clearances” described in “General Provisions; Gas Cost Sharing Work Paragraph No. 8” cannot be maintained and excavation has to be temporarily or permanently abandoned then this particular location shall become a test pit and dealt with as specified in Section 6.07 and “General Provisions; Gas Cost Sharing Work Paragraphs Nos. 2 and 8”.

4. Method Of Construction:

All excavation in the vicinity of gas facilities shall be as required by NYS Industrial Code 753. Where these facilities are paralleling and located two (2) feet or less from the limits of the proposed excavation, the Contractor shall use hand excavation methods (pick and shovel or hand held power tools) to ascertain the clearances of these facilities with respect to the proposed excavation. Once the location of these facilities with respect to the proposed excavation is verified to the satisfaction of the Resident Engineer, the Contractor shall then proceed with a combination of hand and machine excavation as required preserving the integrity of the facilities. The installation of timber supports or underpinning, when soil foundation cannot fully support partially exposed pipes, may be required to prevent pipe movement as directed by the Resident Engineer.

5. Method Of Payment:

The unit price for this work item shall be based on cubic yard (CY) of average excavation with care and, is to be considered as an incremental cost for performing City work with gas facilities interferences.

6. Method Of Measurement:

A. For Paralleling Facilities: Volume calculated as: Depth as measured from existing street surface to the bottom of unsheeted trench excavation allowable by OSHA regulations, multiplied by, the width measured as one (1) foot from the face of excavation toward the center of excavation, multiplied by the length of parallel facility, divided by twenty-seven (27) cubic feet per cubic yard (See “Gas Cost

Sharing Work Standard Sketch No. 5”). The gas facility is no longer considered to be in interference once sheeting has been installed, therefore no further compensation for paralleling facilities as described above will be made.

B. For Encroaching Facilities: Volume calculated as: Depth of trench as allowable by OSHA, maximum up to five (5) feet multiplied by, the width of partially exposed pipe plus one (1) foot, multiplied by the length of facility encroachment, divided by twenty-seven (27) cubic feet per cubic yard (See “Gas Cost Sharing Work Standard Sketch No. 5”).

C. Fully Exposed Gas Facilities: (Not shown on “Gas Cost Sharing Work Standard Sketch No. 5”) along and inside trench and/or crossing trench at an angle greater than forty-five (45) degrees and/or a cover depth greater than five (5) feet from the existing street surface. The volume shall be measured as the depth of trench excavation multiplied by the distance measured along the sheeting line between two (2) points of intersections of the gas facilities and the sides of trench excavation, multiplied by the width of trench excavation.

D. For Additional Excavation And Restoration Due To So Called "Loss Trench", When The Integrity Of Pavement And Soil Above And Around Existing Live Gas Facilities Cannot Be Maintained Due To Its Lack Of Cohesiveness: Volume shall be calculated as: Depth of unsheeted trench excavation multiplied by width measured as distance of facility from closest edge of unsheeted excavation plus, width of facility proper plus, one (1) foot or a maximum width of three (3) feet multiplied by length of facility fully exposed divided by, twenty-seven (27) cubic feet per cubic yard (not shown on “Gas Cost Sharing Work Standard Sketch No. 5”).

E. For Facilities Crossing Excavation For Catch Basins, Or Chutes Installations (When NYCDEP Funded) Or Fire Hydrant Branch Connections, Or Unsheeted Water Main Trench, Or House Sewer And/Or Water Services: Volume calculated as: Depth as measured from existing street surface to the bottom of the trench excavation multiplied by, the width taken as the outside diameter of pipe or the width of structure plus one (1) foot on either side (two (2) feet), multiplied by, the length of exposed facility crossing the trench, divided by twenty-seven (27) cubic feet per cubic yard (not shown on “Gas Cost Sharing Work Standard Sketch No. 5”).

Overlapping volume dimensions measured as described above may occur when multiple facilities are paralleling excavations, encroaching excavations or crossing catch basins and catch basin chute installations. In such cases, all such facilities shall be counted as one limited by the extreme pipes, faces (See “Gas Cost Sharing Work Standard Sketch No. 2”). The volume shall then be calculated as described above.

7. Price To Cover:

The bid price shall also cover all additional supervision, labor, material, equipment and insurance necessary to excavate while protecting and maintaining (excluding supports for fully exposed live gas) gas facilities without disruption of service to the public and in accordance with contract specifications. The price shall also include, changes of sheeting method and excavation width configuration where necessary to accommodate gas facilities in their existing locations; difficulties during the installation of catch basins, chute connections, hydrant branch, and house sewer and water connections under or over gas facilities; loss of productivity due to slower rate of excavation (special care) during excavation, including the use of such methods as: hand excavation around existing single and multiple facilities, extra excavation and backfilling due to lost trench because of existing and adjacent gas facilities, compaction, removal of sheeting from the facilities, extra roadway base restoration and temporary pavement, associated maintenance and protection of traffic, barricades, and traffic plates that may be required to temporarily close and/or complete the work.

SECTION 6.06A - Special Care Excavation and Backfilling for Transmission Mains. (Transmission Main is described as any gas main with a MAOP greater than 124 psig)

1.Description:

Under this section, the contractor shall provide all labor, materials (except for sand to be utilized for backfill of a one-foot envelope around the facility to be furnished by the facility operator), equipment, and incidentals required to support and protect the integrity of Gas Transmission Main during excavations. This facility is owned by the gas company operating in the area, hereafter referred to as facility operator. The work shall be performed in accordance with the contract plans, specifications and at the directions of the Resident Engineer in consultation with authorized representatives of the facility operator.

2.Applicability of Section:

This section shall apply to Transmission Main of various sizes located within any excavation sheeted or unsheeted (excavation refers to any excavation performed for city work and includes excavations performed that are to be subsequently unsheeted/sheeted using approved shoring methods and paralleling, encroaching, and crossing any excavation. Parallel facilities are not exposed at any time during excavation (within 2' of edge of excavation)). Encroaching facilities are partially/fully exposed inside the limit of excavation. This section shall also apply to gas facility crossing catch basins excavation and catch basins sewer connections (chutes), water mains, fire hydrant branch connections, sanitary sewer, storm sewer, combination sewer, house sewer and/or water service connections excavations. The excavation around fully exposed live gas facilities along and within limits of excavation shall be covered by this section also, however the support requirement, if any is required, of such facilities is beyond the scope of these specifications and therefore shall be the responsibility of facility operator to determine and prescribe, at no cost to the City contract, but shall be a matter of adjustment between the contractor and facility operator.

3.Payment Restriction:

The bid item specified under this section shall not be used in combination with items covered under other sections for work done due to a particular gas facility. This item shall not be paid for new gas facilities when trenching for such new facilities has been performed by the contractor of record in common with trench excavation for City Work (overlapping trench limits). The cost of excavating with care as defined in this section shall be deemed included in the cost of trench excavation for the new gas facilities. This restriction shall apply even if such gas common trench excavation is not part of the contract. If facilities are in direct interference with City work, meaning that "minimum clearances" described in the General Provisions for Gas Cost Sharing (Para. No.8) cannot be maintained, the excavation shall be abandoned and the contractor shall be compensated as per the provisions specified in Paragraphs Nos. 5 and 6 of this item (6.06A).

4.Method of Construction:

All excavations in the vicinity of gas facilities shall be as required by NYS Industrial Code 753. No saw cutting of pavement or masonry for gas mains having less than 2 feet of cover to break asphalt/concrete as determined by the facility operator. The contractor shall use power excavation for the removal of pavement or masonry but only to the depth of such pavement or masonry **(breaking of pavement or masonry shall be done by means of hand held pneumatic breaking equipment).** Upon removal of pavement or masonry the contractor shall use hand excavation methods only **(pick and shovel; no power tools)** to ascertain the clearances of these facilities with respect to the proposed excavation. Once the location of these facilities with respect to the proposed excavation is verified to the satisfaction of the Resident Engineer and the facility operator the contractor shall then proceed with hand only within the zone of protection described as 2 feet from the face of the facility in all directions of the facility as required to

preserve the integrity of the facility. Once outside of the zone of protection as described above the contractor may use a combination of hand and machine to complete the excavation.

5.Method of Payment:

The unit price for this work item shall be based on cubic yard (CY) of average excavation with special care and, is to be considered as an incremental cost for performing City work with gas facilities interferences.

6.Method of Measurement:

A.For Paralleling Facilities:

Volume calculated as: Depth as measured from existing street surface to the bottom of facility,multiplied by, the width measured as two (2) feet from the face of excavation toward the center of excavation, multiplied by the length of parallel facility, divided by twenty-seven (27) cubic feet per cubic yard Only hand excavation shall be utilized within the zone of protection identified as 2 feet from face of facility, beyond 2 feet from the face of facility the contractor can use a combination of hand and machine.

B.For Encroaching Facilities:

Volume calculated as: Depth as measured from existing street surface to the bottom of facility, multipliedby, the width measured as two (2) feet plus the exposed facility toward the center of excavation,multiplied by the length of the encroached facility, divided by twenty-seven (27) cubic feet per cubic yard.Only hand excavation shall be utilized within the zone of protection identified as 2 feet from face offacility, beyond 2 feet from the face of facility the contractor can use a combination of hand and machine.

C.Fully Exposed Gas Facilities:

Volume calculated as: Depth as measured from existing street surface to the bottom of facility, multipliedby, the width measured as two (2) feet from the face of the facility on either side plus the facility, multipliedby the length of the facility, divided by 27 cubic feet per cubic yard. Only hand excavation shall be utilizedwithin the zone of protection identified as 2 feet from face of facility in all directions, beyond 2 feet fromthe face of facility in all directions the contractor can use a combination of hand and machine.

D.For Additional Excavation And Restoration Due To So Called “Loss Trench”, When The IntegrityOf Pavement And Soil Above And Around Existing Live Gas Facilities Cannot Be maintained DueTo Its Lack of Cohesiveness:

Volume shall be calculated as: Depth of unsheeted trench excavation multiplied by width measured asdistance of facility from closest edge of unsheeted excavation plus, width of facility proper plus, one (1) footor a maximum width of three (3) feet multiplied by length of facility fully exposed divided by, twenty-seven(27)cubic feet per cubic yard (not shown on “Gas Cost Sharing Work Standard Sketch No. 5”).

E.For Facilities Crossing Excavation For Catch Basins, Or Chutes Installations (When NYCDEPFunded) Or Fire Hydrant Branch Connections, Or Unsheeted Water Main Trench, Or House SewerAnd/Or Water Services:

Volume calculated as: Depth as defined above multiplied by, the width taken as the outside diameter ofpipe or the width of structure plus one (1) foot on either side (two (2) feet), multiplied by, the length ofexposed facility crossing the trench, divided by twenty-seven (27) cubic feet per cubic yard (not shown on“Gas Cost Sharing Work Standard Sketch No. 5”).

7.Price to Cover:

The bid price shall also cover all additional supervision, labor, material, equipment and insurance necessary to excavate while protecting and maintaining (excluding supports for fully exposed live gas) gas facilities

without disruption of service to the public and in accordance with contract specifications. The price shall also include, changes of sheeting method and excavation width configuration where necessary to accommodate gas facilities in their existing locations; difficulties during the installation of catch basins, chute connections, hydrant branch, and house sewer, sanitary sewer, storm sewer, combination sewer and water connections under or over gas facilities; loss of productivity due to slower rate of excavation (special care) during excavation, compaction, removal of sheeting from the facilities, extra roadway base restoration and temporary pavement, associated maintenance of traffic, barricades, and traffic plates that may be required to temporarily close and/or complete the work. Breaking shall be done by means of hand held pneumatic breaking equipment. Inspection of exposed mains shall be performed by facility operator in a timely fashion and shall not unduly impede contractor's progress or productivity.

SECTION 6.07 - Test Pits For Gas Facilities.

1. Description:

Under this section, the Contractor shall furnish all labor, materials, insurance, equipment and appliances necessary to excavate, sheet and, maintain test pits at locations approved by the Resident Engineer in consultation with the facility operator. Test pits shall be dug in order to ascertain exact locations, cover and invert elevations, clearances, alignment and operating status (live or dead) of existing gas facilities. The Contractor shall inspect jointly with the Resident Engineer and facility operator, gas facilities and other structures uncovered, take all relevant measurements and elevations as directed by the Resident Engineer. Tests to determine operating status of gas facilities shall be performed by facility operator. The pits shall be covered with steel plates during daytime nonworking hours, and uncovered, as required, until the inspection work is completed. Testing of gas facilities may require a maximum of four (4) hours. Then, the pits shall be backfilled with clean fill, and resurfaced with temporary pavement. All traffic shall be maintained and all safety measures as stipulated shall be complied with.

2. Methods Of Construction:

A. Excavation: Existing pavement to be removed shall be neatly cut along lines of removal with a saw or other approved equipment which leaves a neat straight joint line along the juncture with subsequently replaced pavement. Excavation in the vicinity of utilities and other structures shall be performed using hand tools. Use of hand operated pneumatic and electric jackhammers will be permitted only for breaking pavement and removal of masonry, concrete and boulders, or as otherwise directed by the Resident Engineer. The Contractor shall properly dispose of all materials excavated from test pits away from site. Test pits shall be excavated at locations shown on the contract drawings or as directed by the Resident Engineer. Additional test pits may be required and shall be excavated where required, as ordered by the Resident Engineer. All test pits shall be excavated to a depth and size necessary to locate the existing facilities. Sheeting shall be used when depth of excavation exceeds five (5) feet. The sheeting required shall be furnished and installed in full compliance with the State of New York and Federal Safety Codes requirements and as specified in contract, whichever is more stringent. Care shall be taken that no existing gas facilities or other structures are broken or damaged. All broken or damaged facilities shall be reported immediately to facility operator who shall decide whether such facilities shall be repaired or replaced by company forces or by City contractor and in conformance with “General Provisions; Gas Cost Sharing Work Paragraph No. 9”. Contractor shall excavate all material encountered, including large masses of concrete, cemented masonry and boulders, as directed by the Resident Engineer. Any type of excavation protection used, shall satisfy the following:

   (a) Industrial Code Rule 753.
   (b) Prevent injury to workers and the public, and avoid damage to existing water, sewer, and gas pipes or other structures, and to pavements and their foundations, through caving or sliding of the banks of the excavation.

   Should it become necessary, as determined by the Resident Engineer, to enlarge any test pit in any dimension after sheeting has been placed, the Contractor shall remove portions of the sheeting, as necessary, enlarge the test pits as directed, and replace the sheeting without additional compensation for this work other than for the additional volume of material excavated.

B. Maintenance Of Test Pits: Excavated test pits shall be maintained free of debris and kept dry by the Contractor in order to permit the inspection and measurements and to determine the locations of facilities. In order to accomplish this, Contractor shall, upon completion of excavation and placement of sheeting (if depth greater than five (5) feet), furnish and install adequate steel plates and posting over the excavated pits and shall temporarily remove all equipment debris and workers, and relocate barricades in order to open the full width of street to traffic during nonworking hours. The Contractor shall then, at no additional cost, relocate such barricades, barrels, cones and other warning devices and remove steel plates, as and when directed by the Resident Engineer to facilitate the inspection of exposed facilities. When work is being performed and the pits are not covered with steel plates, the

Contractor shall provide complete and safe access to the test pits as may be required, and he shall provide construction barricades and maintain traffic at all times as shown or as directed by the Resident Engineer. Upon completion of test pit inspection by the Resident Engineer, the pit shall be backfilled by the Contractor as specified in contract, except that backfill material shall conform to contract specifications for such purpose.

C. Pavement And Sidewalk Restoration: After backfilling is completed, the Contractor shall construct a temporary pavement consisting of a minimum of four (4) inches thick asphaltic concrete mixture in roadway areas or a two (2) inches thick asphaltic concrete mixture in sidewalk areas in order to maintain existing pedestrian and vehicular traffic. This temporary pavement shall be maintained until permanent pavement and sidewalk replacement is constructed as specified in contract.

3. Measurements:

The quantity to be measured for payment shall be the number of cubic yards of material removed from within the limits of the pit dimensions as directed by the Resident Engineer. The volume occupied by existing pipes or other structures remaining within the maximum payment lines will not be deducted from the total volume measured except, where the cross sectional area of these facilities exceeds four (4) square feet. As determined by the Resident Engineer, the quantity measured for payment may be proportionate to a fair and reasonable estimate of gas responsibility in the total volume excavated.

4. Price To Cover:

The contract price bid per cubic yard for test pits shall cover all additional costs of labor, material, insurance, equipment, appliances and incidentals required to excavate test pits, including removal and disposal of excavated materials, sheeting, steel plating, backfill, compaction and temporary pavement and sidewalk restoration all in accordance with the specifications and as directed by the Resident Engineer. The price shall also include the cost of providing safe access to the excavation by facility operator for the performance of certain test to determine operating status of gas facilities prior to City work. The price shall also include support and protection of all gas facilities crossing excavation, paralleling and/or encroaching any face of excavation.

SECTION 6.08 - “NO TEXT”

SECTION 6.09 - Trench Excavation and Backfill for New Gas Mains and Services (For National Grid Work Only)

1. Description:

Under this section, the contractor shall furnish all labor, materials, equipment, insurance, permits and incidentals required to break/remove roadway and sidewalk pavement, excavate, backfill and restore gas trenches. The trench to be excavated shall be determined by the size of the gas facility to be installed. The work shall be performed in accordance with applicable specifications, and/or at the direction of the Resident Engineer in consultation with the facility operator.

2. Materials:

All materials used to excavate and prepare trenches shall be supplied by the Contractor and be approved by the facility operator in consultation with the Resident Engineer.

3. Method of Construction:

Excavation – The Contractor shall saw cut and/or break and remove existing roadway which may include but is not limited to, asphalt, concrete and cobblestone, utilizing approved equipment that leaves a neat straight joint line along the juncture with subsequently replaced pavement. Prior to starting the trenching

operation, the contractor shall excavate the appropriate gas main tie-in pits at the extremities of the gas main sections to be replaced. Test pits shall be excavated to determine exact location of all tie-in pits and at appropriate intervals along proposed trench excavation to verify lane and clearances as shown on the contract plans. The tie-in pits shall be adequately protected by the contractor using wood fencing or steel traffic plates until such time when the facility operator has completed the tie-in work. The Contractor shall be permitted to excavate utilizing a combination of machine and hand excavation, as field conditions warrant, and as directed by the facility operator. The trench shall be adjusted so as to provide for a nominal cover on the new gas facilities or as required based on field conditions, applicable specifications, or as directed by the facility operator in consultation with the Resident Engineer. The width of the trench shall be as directed by the facility operator in consultation of the Resident Engineer. The bottom of the trench shall be graded smooth with a minimum cushion of 3 inches of clean sand and in conformance with applicable specification and be compacted, to minimize initial settlement and to avoid "point" support of new gas facilities. All stones projecting into the trench bottom shall be removed, and the voids backfilled before the new gas facilities are installed. Where streets are not to final grade, the cover shall be measured from the final grade, or the existing grade, whichever provides the deeper trench. Excavation in the vicinity of utilities and other structures shall be performed using hand tools. The contractor shall properly dispose of all materials excavated away from site. Size and location of excavation shall be as directed by the facility operator in consultation with the Resident Engineer. Trenches shall be excavated to a depth and size necessary to facilitate the installation of the new gas facility and in conformance with the applicable specification. All existing facilities that are encountered during trench excavating shall be protected in a manner suitable to the facility operator in consultation with the Resident Engineer. Tight sheeting shall be used, as required, based on field conditions and/or when the depth of excavation is equal to or greater than five feet. Skeleton type sheeting will not be permitted. The sheeting required shall be furnished and installed in full compliance with the State of New York and Federal Safety Code requirements and in compliance with applicable specifications and/or as directed by the facility operator in consultation with the Resident Engineer. Care shall be taken that no existing gas facilities or other structures are broken or damaged. Contractor shall excavate all material encountered necessary to facilitate the installation of the new gas facilities, and as directed by the facility operator. Care should be taken to avoid damage to existing utility facilities and structures, and to pavements and their foundations, and to avoid caving or sliding banks within the excavation.

Maintenance of Trench Excavation - Excavated trenches shall be maintained free of debris and kept dry by the contractor. In order to accomplish this, contractor shall, upon completion of excavation and placement of sheeting (as required and/or if depth is equal to or greater than five feet), furnish and install adequate steel plates, as directed by the facility operator in consultation with the Resident Engineer, and posting over the excavated trenches and shall temporarily remove all equipment debris and workers, and relocate barricades in order to open the full width of street to traffic during non-working hours, as required based on DOT requirements. National Grid forces will perform all live gas main connections, dead gas main cut-outs, and/or service work associated with disconnecting and reconnecting from old to new gas main The Contractor shall then, at no additional cost, relocate such barricades barrels, cones and other warning devices and remove steel plates, as and when directed by the facility operator in consultation with the Resident Engineer to facilitate the installation of the new gas facilities. When work is being performed and the excavations are not covered with steel plates, the Contractor shall provide complete and safe access to the trench as may be required, and shall provide construction barricades and maintain traffic at all times as shown or as directed by the facility operator in consultation with the Resident Engineer. The contractor has the responsibility to maintain and set to grade all National Grid hardware during backfill and pavement restoration. Upon completion of installation of the new gas facility, the trench excavation shall be backfilled by the contractor in accordance with Contract requirements and all backfill material shall conform to contract specifications for such purpose.

Pavement and Sidewalk Restoration - After backfilling is completed, the contractor shall install temporary pavement consisting of six inches (6”) thick asphaltic concrete mixture in roadway areas or a two inches (2”) thick asphaltic concrete mixture in sidewalk areas in order to maintain existing pedestrian and vehicular traffic. This temporary pavement shall be maintained until permanent replacement as specified in contract. Permanent pavement restoration shall be as required by the appropriate contract specifications and as directed by the Resident Engineer.

4. Method of Measurement:

The quantity to be measured for payment shall be the number of cubic yards (C.Y.) of trench actually excavated, including roadway pavement, base and/or sidewalk concrete removed within the limits of the trench as directed by the Resident Engineer in consultation with the facility operator. The volume occupied by existing pipes or other structures will be deducted from the total volume measured as shown on contract drawing(s) Title: EP-7 SECT. 6.09 GAS SPECIALTY CONTRACTOR WORK, or as encountered based on existing field conditions.

5. Price to Cover:

The unit price bid per cubic yard for excavation shall include the cost of all supervision, labor, material, equipment, insurance and incidentals necessary to complete excavation trenches, including backfill, compaction testing and restoration of trenches and tie-ins pits as specified or shown on the contract, plans. The bid price shall also include the cost of coordinating the sewer and water main work to be performed by the contractor with the gas installation work to be performed by others. The price shall also include, associated maintenance of traffic, and traffic plates and openings and closings of plates as may be required in order to provide access to the facility operator during the new gas facility installation, and installing, removing and maintaining tight sheeting that may be required, cut, break and remove various thickness of surface and base pavement, excavate by hand, furnish, place and compact, in compliance with DOT requirements, clean sand backfill following installation of the gas facility. Any required removing, trucking, storing, and disposing of material shall be deemed included in the unit price. The price shall also include the cost of providing temporary pavement restoration. Permanent pavement restoration shall be deemed included in this item, as required and as directed by the Resident Engineer.

SECTION 6.09a Trench Excavation and Backfill for New Gas Mains and Services (For Con Edison Work Only)

1. Description:

Under this section, the contractor shall furnish all labor, materials, equipment, insurance, permits and incidentals required to break/remove roadway and sidewalk pavement, excavate, backfill and restore gas trenches. The trench to be excavated shall be determined by the size of the gas facility to be installed. The work shall be performed in accordance with applicable specifications, and/or at the direction of the Resident Engineer in consultation with the facility operator.

2. Materials:

All materials used to excavate and prepare trenches shall be supplied by the Contractor and be approved by the facility operator in consultation with the Resident Engineer. Clean sand backfill material shall be used and shall conform to Con Edison specification EO-1181-rev.6, General Specification for Backfilling of Trench and Small Openings.

3. Method of Construction:

Excavation – The Contractor shall saw cut and/or break and remove existing roadway which may include but is not limited to, asphalt, concrete and cobblestone, utilizing approved equipment that leaves a neat straight joint line along the juncture with subsequently replaced pavement. Prior to starting the trenching operation, the contractor shall excavate the appropriate gas main tie-in pits at the extremities of the gas main sections to be replaced. Test pits shall be excavated to determine exact location of all tie-in pits and at appropriate intervals along proposed trench excavation to verify lane and clearances as shown on the contract plans. The tie-in pits shall be adequately protected by the contractor using wood fencing or steel traffic plates until such time when the facility operator has completed the tie-in work. The Contractor shall be permitted to excavate utilizing a combination of machine and hand excavation, as field conditions warrant, and as directed by the facility operator. The trench shall be adjusted so as to provide for a nominal cover on the new gas facilities or as required based on field conditions, applicable specifications, or as directed by the facility operator in consultation with the Resident Engineer. The width of the trench shall be

as directed by the facility operator in consultation of the Resident Engineer. The width and depth of the trench shall conform to Con Edison Gas Operations drawing 309495 rev. 4, Trench Excavation for Gas Mains Up to 350 PSIG, or as directed by the facility operator in consultation of the Resident Engineer. The bottom of the trench shall be graded smooth with a minimum cushion of 3 inches of clean sand and in conformance with applicable specification and be compacted, to minimize initial settlement and to avoid "point" support of new gas facilities. All stones projecting into the trench bottom shall be removed, and the voids backfilled before the new gas facilities are installed. Where streets are not to final grade, the cover shall be measured from the final grade, or the existing grade, whichever provides the deeper trench. Excavation in the vicinity of utilities and other structures shall be performed using hand tools. The contractor shall properly dispose of all materials excavated away from site. Size and location of excavation shall be as directed by the facility operator in consultation with the Resident Engineer. Trenches shall be excavated to a depth and size necessary to facilitate the installation of the new gas facility and in conformance with the applicable specification. All existing facilities that are encountered during trench excavating shall be protected in a manner suitable to the facility operator in consultation with the Resident Engineer. Tight sheeting shall be used, as required, based on field conditions and/or when the depth of excavation is equal to or greater than five feet. Skeleton type sheeting will not be permitted. The sheeting required shall be furnished and installed in full compliance with the State of New York and Federal Safety Code requirements and in compliance with applicable specifications and/or as directed by the facility operator in consultation with the Resident Engineer. Care shall be taken that no existing gas facilities or other structures are broken or damaged. Contractor shall excavate all material encountered necessary to facilitate the installation of the new gas facilities, and as directed by the facility operator. Care should be taken to avoid damage to existing utility facilities and structures, and to pavements and their foundations, and to avoid caving or sliding banks within the excavation.

Maintenance of Trench Excavation - Excavated trenches shall be maintained free of debris and kept dry by the contractor. In order to accomplish this, contractor shall, upon completion of excavation and placement of sheeting (as required and/or if depth is equal to or greater than five feet), furnish and install adequate steel plates, as directed by the facility operator in consultation with the Resident Engineer, and posting over the excavated trenches and shall temporarily remove all equipment debris and workers, and relocate barricades in order to open the full width of street to traffic during non-working hours, as required based on DOT requirements. Con Edison forces will perform all live gas main connections, dead gas main cut-outs, and/or service work associated with disconnecting and reconnecting from old to new gas main The Contractor shall then, at no additional cost, relocate such barricades barrels, cones and other warning devices and remove steel plates, as and when directed by the facility operator in consultation with the Resident Engineer to facilitate the installation of the new gas facilities. When work is being performed and the excavations are not covered with steel plates, the Contractor shall provide complete and safe access to the trench as may be required, and shall provide construction barricades and maintain traffic at all times as shown or as directed by the facility operator in consultation with the Resident Engineer. The contractor has the responsibility to maintain and set to grade all Con Edison hardware during backfill and pavement restoration. Upon completion of installation of the new gas facility, the trench excavation shall be backfilled by the contractor in accordance with Contract requirements and all backfill material shall conform to contract specifications for such purpose.

Pavement and Sidewalk Restoration - After backfilling is completed, the contractor shall install temporary pavement consisting of six inches (6”) thick asphaltic concrete mixture in roadway areas or a two inches (2”) thick asphaltic concrete mixture in sidewalk areas in order to maintain existing pedestrian and vehicular traffic. This temporary pavement shall be maintained until permanent replacement as specified in contract. Permanent pavement restoration shall be as required by the appropriate contract specifications and as directed by the Resident Engineer.

4. Method of Measurement:

The quantity to be measured for payment shall be the number of cubic yards (C.Y.) of trench actually excavated, including roadway pavement, base and/or sidewalk concrete removed within the limits of the trench as directed by the Resident Engineer in consultation with the facility operator. The volume occupied by existing pipes or other structures will be deducted from the total volume measured as shown on contract drawing(s) Title: EP-7 SECT. 6.09 GAS SPECIALTY CONTRACTOR WORK, or as encountered based on existing field conditions.

5. Price to Cover:

The unit price bid per cubic yard for excavation shall include the cost of all supervision, labor, material, equipment, insurance and incidentals necessary to complete excavation trenches, including backfill, compaction testing and restoration of trenches and tie-ins pits as specified or shown on the contract, plans. The bid price shall also include the cost of coordinating the sewer and water main work to be performed by the contractor with the gas installation work to be performed by others. The price shall also include, associated maintenance of traffic, and traffic plates and openings and closings of plates as may be required in order to provide access to the facility operator during the new gas facility installation, and installing, removing and maintaining tight sheeting that may be required, cut, break and remove various thickness of surface and base pavement, excavate by hand, furnish, place and compact, in compliance with DOT requirements, clean sand backfill following installation of the gas facility. Any required removing, trucking, storing, and disposing of material shall be deemed included in the unit price. The price shall also include the cost of providing temporary pavement restoration. Permanent pavement restoration shall be deemed included in this item, as required and as directed by the Resident Engineer.

GAS COST SHARING STANDARD SPECIFICATIONS
SCHEDULE GCS-A

Average rate charged by utility companies to Disconnect and Reconnect Gas Services:

1. National Grid - $586.90 per Service/and Visit
2. Con Edison - $524.00 per Service/and Visit

IV - STANDARD SKETCHES; GAS COST SHARING WORK

Hereinafter attached are the following Standard Sketches for Gas Cost Sharing Work:

Sketch No. 1 - Support Requirements For Gas Mains And Services Crossing Excavation Greater Than 4' - 0" Wide At Any Angle

Sketch No. 1A - Support Requirements For Gas Mains Over 16" Diameter Up To And Including 48" Diameter Crossing Excavation At Any Angle

Sketch No. 2 - Typical Methods Of Measurement For Gas Crossings

Sketch No. 3 - Utility Crossings During Catch Basin Chute Connection Pipe Installation

Sketch No. 4 - Utility Crossings During Catch Basin Chute Connection Pipe Installation (Extra Depth)

Sketch No. 5 - Gas Main Encroachment On And/Or Parallel To Excavation Of Unsheeted Trench

GAS COST SHARING WORK (SKETCH NO. 1)

SUPPORT REQUIREMENTS FOR GAS MAINS AND SERVICES CROSSING EXCAVATION GREATER THAN 4'-0" WIDE AT ANY ANGLE

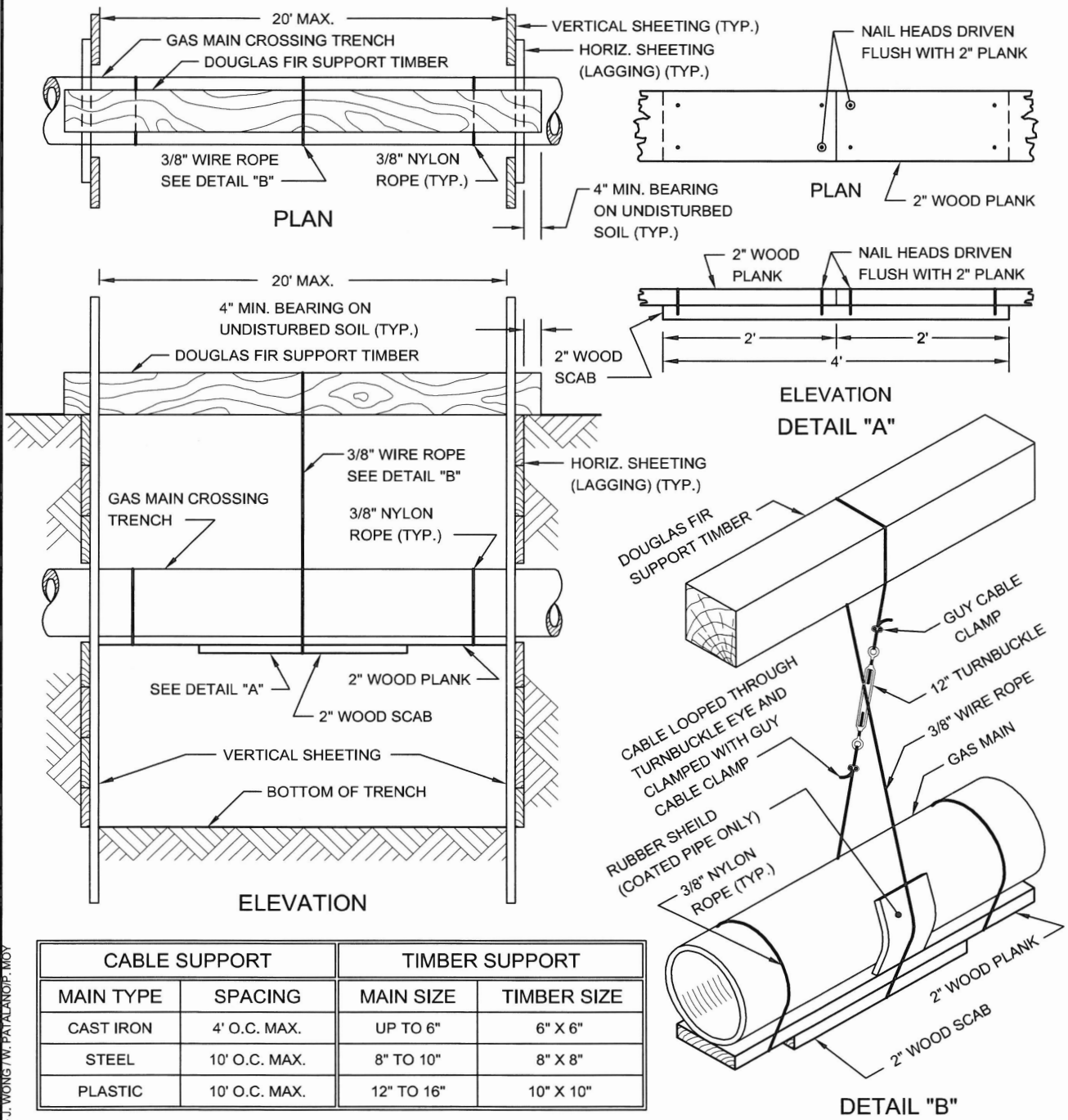

CABLE SUPPORT		TIMBER SUPPORT	
MAIN TYPE	SPACING	MAIN SIZE	TIMBER SIZE
CAST IRON	4' O.C. MAX.	UP TO 6"	6" X 6"
STEEL	10' O.C. MAX.	8" TO 10"	8" X 8"
PLASTIC	10' O.C. MAX.	12" TO 16"	10" X 10"

REVISED OCT. 2004 - L. ADRIEN
REVISED JUNE 1998 - J. WONG / W. PATALANO/P. MOY

GAS COST SHARING WORK (SKETCH NO. 1A)
SUPPORT REQUIREMENTS FOR GAS MAINS SUSPENDED IN EXCAVATIONS BETWEEN 12'-0" AND 30'-0" WIDE AT ANY ANGLE

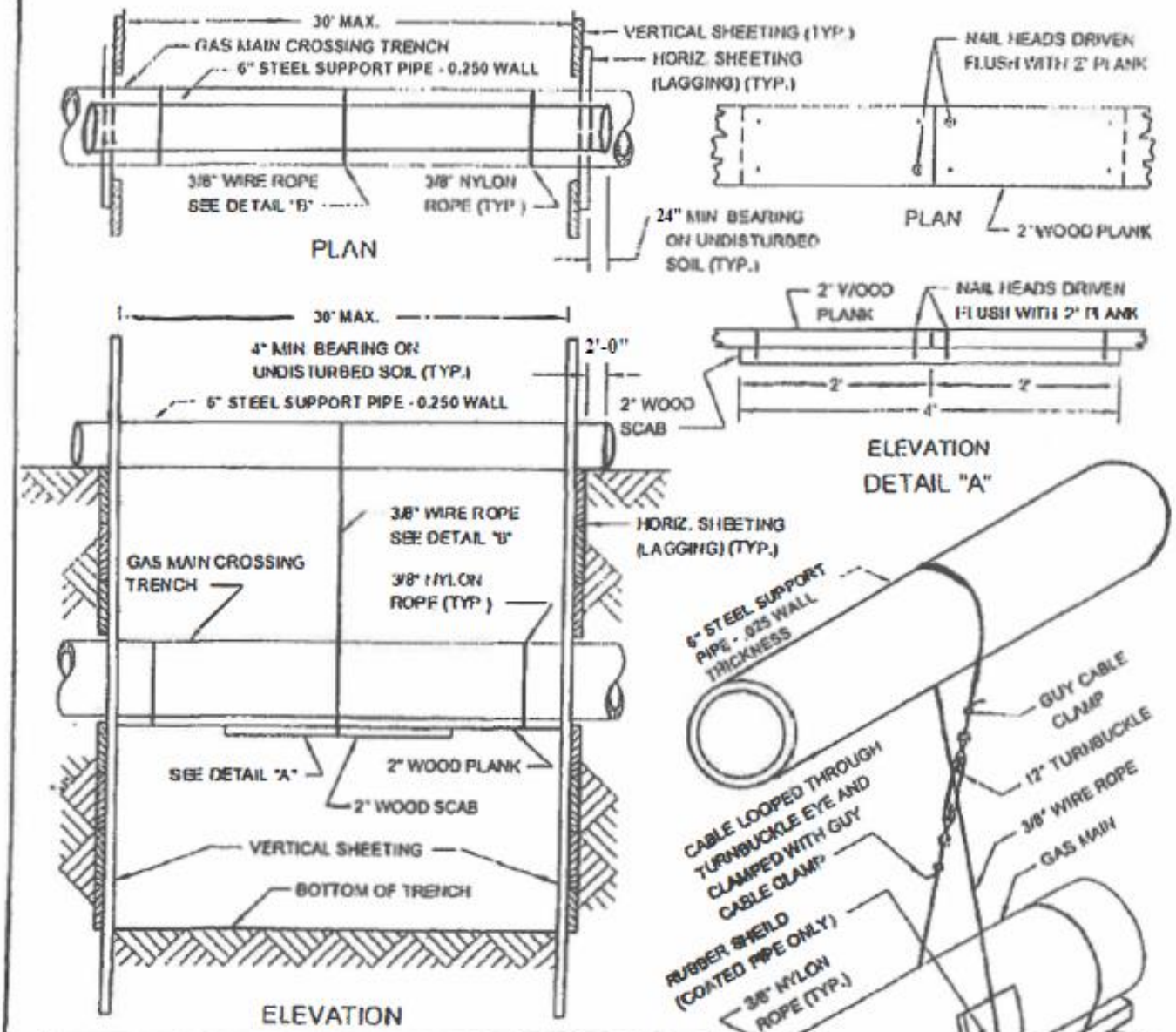

CABLE SUPPORT SPACING

PIPE SIZE	CAST IRON	STEEL	PLASTIC
UP TO 2"	-	10'-0"	3'-0"
3" TO 4"	4'-0"	15'-0"	6'-0"
6" TO 10"	4'-0"	15'-0"	6'-0"
12" OR LARGER	6'-0"	15'-0"	6'-0"

NOTE: SUPPORTS FOR GAS TRANSMISSION FACILITIES SHALL BE REVIEWED WITH GAS ENGINEERING PRIOR TO INSTALLATION.

GAS COST SHARING WORK (SKETCH NO. 2)

TYPICAL METHODS OF MEASUREMENT FOR GAS CROSSINGS

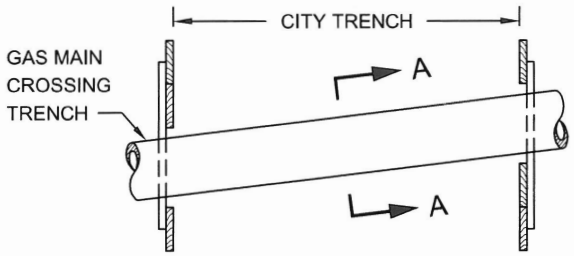

SINGLE FACILITY CROSSING

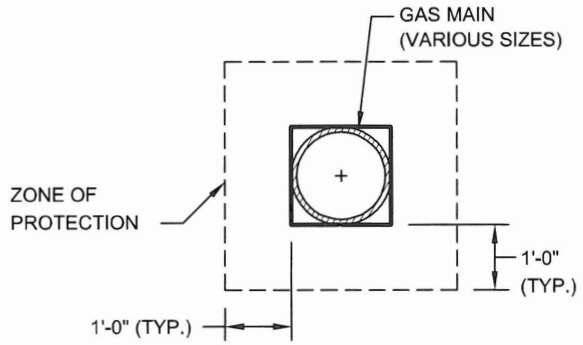

SECTION A-A

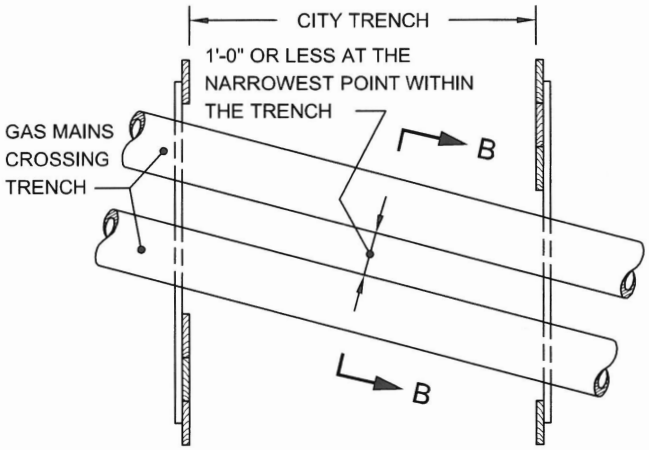

MULTIPLE FACILITIES
(GAS MAINS AT SAME ELEVATION)

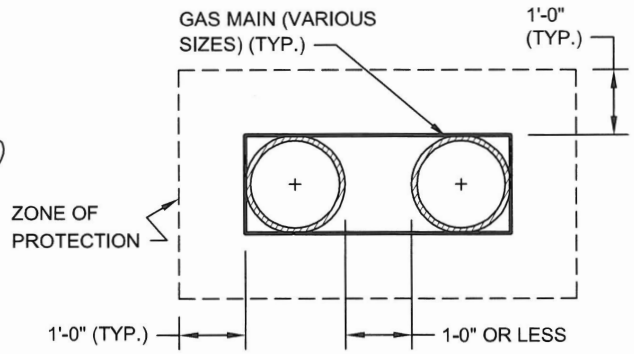

SECTION B-B

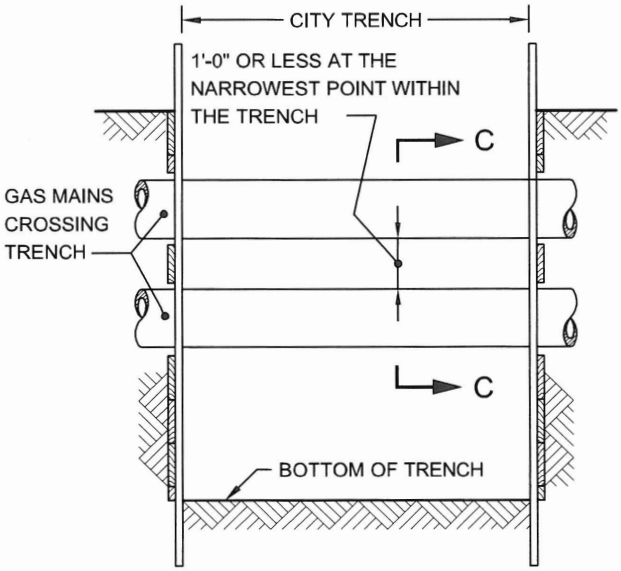

MULTIPLE FACILITIES
(ONE CROSSING AT DIFFERENT ELEVATIONS)

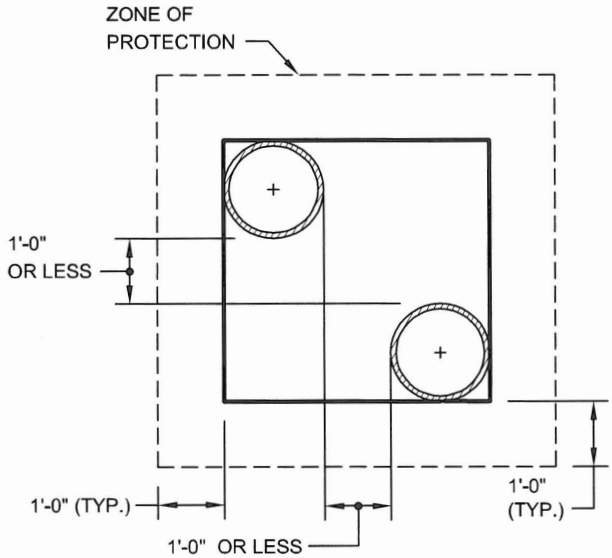

SECTION C-C

NOTE:

GAS MAINS MAY OR MAY NOT BE PARALLEL TO EACH OTHER.

REVISED SEPT. 2004 - L. ADRIEN
REVISED SEPT. 2004 - J. WONG/W. PATALANO/P. MOY

GAS COST SHARING WORK (SKETCH NO. 3)

UTILITY CROSSINGS DURING CATCH BASIN CHUTE CONNECTION PIPE INSTALLATION

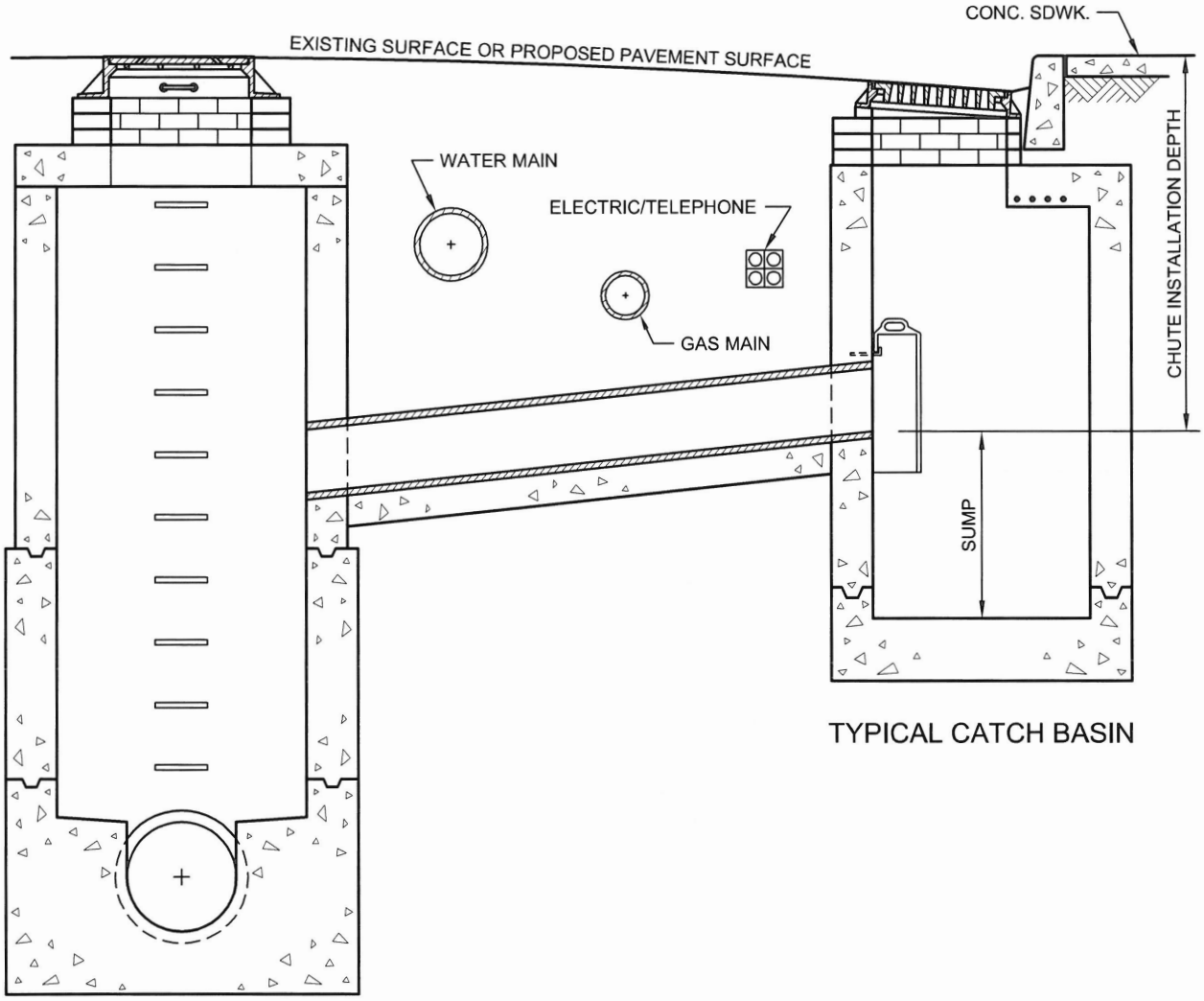

TYPICAL CATCH BASIN

TYPICAL SEWER MANHOLE

REVISED OCT. 2004 - L. ADRIEN
REVISED OCT. 1998 - J. WONG/W. PATALANO/P. MOY

GAS COST SHARING WORK (SKETCH NO. 4)

UTILITY CROSSINGS DURING CATCH BASIN CHUTE CONNECTION PIPE INSTALLATION (EXTRA DEPTH)

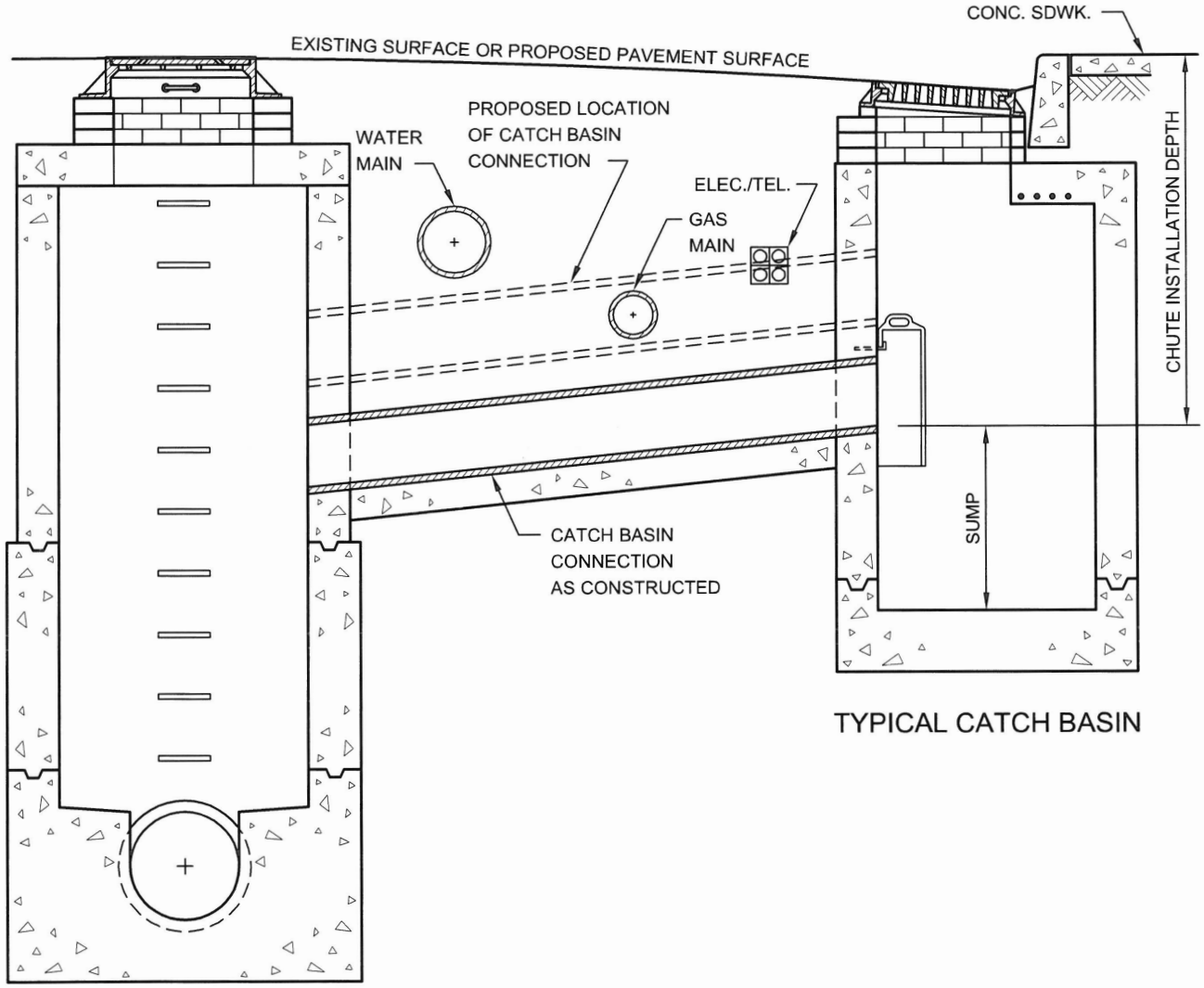

TYPICAL CATCH BASIN

TYPICAL SEWER MANHOLE

REVISED OCT. 2004 - I. ADRIEN
REVISED OCT. 1998 - J. WONG/W. PATALANO/P. MOY

GAS COST SHARING WORK (SKETCH NO. 5)

GAS MAIN ENCROACHMENT ON AND/OR PARALLEL TO EXCAVATION OF UNSHEETED TRENCH

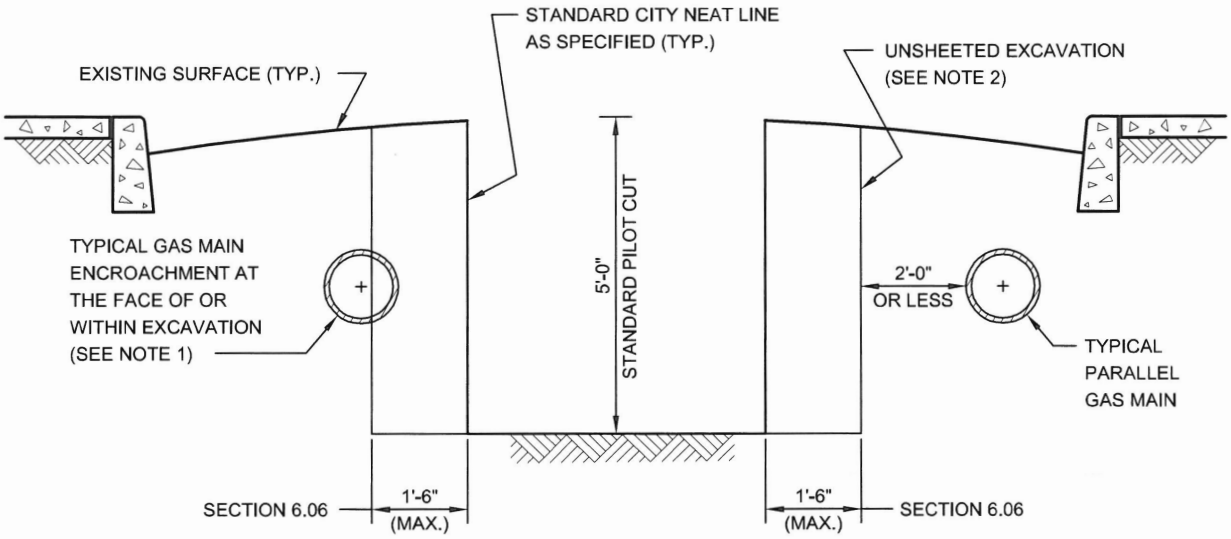

NOTES:

(1) GAS MAIN LOCATED AS SHOWN MAY HAVE TO BE REMOVED BY THE FACILITY OPERATOR PRIOR TO THE START OF CITY EXCAVATION, OTHERWISE, THE CONTRACTOR WILL BE PAID UNDER SECTION 6.06 FOR THE SAID WORK. IF GAS MAIN IS ABANDONED THEN SECTION 6.03 SHALL APPLY.

(2) EIGHTEEN (18) INCHES FROM STANDARD NEAT LINE IS THE MAXIMUM ALLOWABLE WIDTH OF AREA THAT MAY BE DISTURBED OR EXCAVATED DURING INSTALLATION OF CERTAIN TYPES OF SHEETING SYSTEMS THAT MEET THE REQUIREMENTS OF THE STANDARD SPECIFICATIONS OF THE DEPARTMENT OF DESIGN AND CONSTRUCTION OF THE CITY OF NEW YORK.

REVISED OCT. 2004 - L. ADRIEN
REVISED OCT. 1998 - J. WONG/W. PATALANO/P. MOY

V - PRELIMINARY GAS WORK TO BE PERFORMED BY FACILITY OPERATOR.

APPLICABLE TO ALL GAS DRAWINGS:

- ALL SUPPORT AND PROTECTION WORK TO BE PERFORMED BY CITY CONTRACTOR
- NO CAPITAL WORK IS ANTICIPATED AT THIS TIME.
- IF ADDITIONAL INFORMATION IS NEEDED REGARDING THE FACILITY OPERATOR'S RELOCATION WORK, THE CONTRACTOR IS ADVISED TO CONTACT THE GAS COMPANY REPRESENTATIVE:

Neville Jacobs Jr.
NationalGrid Energy Delivery
287 Maspeth Avenue
Brooklyn, NY 11211
718-963-5612
Neville.Jacobs@nationalgrid.com

(NO TEXT IN THIS AREA, TURN PAGE)

VI - LISTING OF APPROXIMATE LOCATIONS OF EP-7 BID ITEMS QUANTITIES.

(NO TEXT IN THIS AREA, TURN PAGE)

SCOPE OF WORK
SUPPORT & PROTECTION
FOR CONTRACT NUMBER EC-SER25

The New York City Department of Design and Construction is planning to install new seepage and catch basins and all appurtenances within the project limits.

6.01.1 (NG) Support & Protect Gas Main Crossing Sewer Up To 24" In Diameter (Ea.)

20 in Various Locations As Required

6.01.2 (NG) Support & Protect Gas Main Crossing Sewer 30" In Diameter (Ea.)

1 in Various Locations As Required

6.01.3 (NG) Support & Protect Gas Main Crossing Sewer 36" Thru 42" In Diameter (Ea.)

3 in Various Location As Required

6.01.5 (NG) Gas Main Crossing Sewer 60" In Diameter (EA)

1 in Various Location As Required

6.01.4 (NG) Support & Protect Gas Main Crossing Sewer 48" Thru 54" In Diameter (Ea.)

3 in Jansen Street @ Huguenot Avenue

6.01.8 (NG) Support & Protect Gas Services Crossing Trenches and/or Excavations (Ea.)

300 in Various Locations As Required

6.02 (NG) Extra Excavation For the Installation of Catch Basin Sewer Drain Pipes with gas interferences (Ea.)

300 in Various Locations As Required

6.03 (NG) Removal Of Abandoned Gas Facilities. All Sizes (L.F.)

1850 in Various Locations As Required

6.03.1 (NG) Removal Of Abandoned Gas facilities with Possible Coal Tar Wrap. All sizes. (L.F.) (For National Grid work Only)

625 in Various Locations As Required

6.04 (NG) Adjust Hardware to Grade Using Spacer Rings/Adaptors (Street repaving) (Ea.)

32 in Various Locations As Required

6.05 (NG) Adjust Hardware to Grade by Resetting (Road Reconstruction) (Ea.)

32 in Various Locations As Required

SCOPE OF WORK
SUPPORT & PROTECTION
FOR CONTRACT NUMBER EC-SER25

The New York City Department of Design and Construction is planning to install new seepage and catch basins and all appurtenances within the project limits.

6.06 (NG) Special Care Excavation & Backfilling (C.Y.)

1650 in Various Locations, as Required.

6.06A (NG) Special care excavation and backfilling for transmission mains (C.Y.)

30 in Various Locations, as Required

6.07 (NG) Test Pits For Gas Facilities (C.Y.)

80 in Various Locations As Required

6.09 (NG) Trench Excavation And Backfill For New Gas Mains & Services. Gas installed by others. (C.Y.) (For National Grid work Only)

550 in Various Locations As Required

END OF EP-7 PAGES

THE EP-7 PAGES CONSIST OF FORTY (40) PAGES, INCLUDING THIS PAGE.

U - PAGES

SECTION U (VERSION 2.0)

NOTICE

THE PAGES CONTAINED IN THIS SECTION U VERSION 2.0 (U-PAGES) REPRESENT ADDITIONAL CONTRACT REQUIREMENTS APPLYING TO WORK PERFORMED IN THE PRESENCE OF PRIVATELY OWNED UTILITY FACILITIES.

(NO TEXT ON THIS PAGE)

SECTION U (VERSION 2.0)

DATED: September 6, 2024

1. The Contractor shall be responsible for compliance with all the provisions of the following Sections and Schedules, which are hereby made a part of the original contract documents:

   A. "SECTION U: Additional Contract Requirements Applying to Work Performed in the Presence of Privately Owned Utility Facilities" (Pages U-3 through U-13)

   B. Schedule U-1 (Page U-15)

   C. Schedule U-2 listing scope of utility interferences is no longer included in City contract. Such information will be part of Interference Agreement between Utility Operator and the Contractor.

   D. Consolidated Edison Company Guideline (Page 16-29)

   E. Schedule U-3 Page U-30 (as per the Private Utilities reference document for SECTION U called "CET SPECIFICATIONS AND SKETCHES", dated November 2010).

2. Each facility operator shall provide inspectors at the work site to inspect methods of interference work, verify quantities and items of Utility Work, and coordinate all phases of the facility operator operations.

3. In addition, the following statements are made to provide clarification of various paragraphs under Section U:

   A. Section U, Paragraph 3, requires the Contractor to immediately commence negotiations with each Company for an Interference Agreement under which the Company will compensate the Contractor for any Interference Work which the Company does not elect to perform with its own forces or by specialty contractors retained by the Company. Thus the Contractor is on notice that its work under the Contract may be affected by Interference Work performed by (a) the Contractor pursuant to a separate Interference Agreement with the Company, (b) the Company, or (c) partly by each.

B. The City has no contract with any of the Companies for work on or adjacent to the site of work under this Contract, and the Companies are not "Other Contractors" as defined for the purposes of this Contract. The Contractor is reminded, however, that pursuant to Section U, Paragraph 3, the City will not compensate the Contractor for any direct and/or indirect costs related to Interference Work, regardless of whether such Interference Work is covered by an Interference Agreement between the Contractor and the Company or is performed by the Company using its own forces or by specialty contractors retained by the Company.

C. Section U, Paragraph 13, provides that the provisions of Section U are material provisions of the Contract and that the Contractor's failure to comply with the procedures set forth in Section U are sufficient for the Commissioner to declare the Contractor in default pursuant to Article 48 of the Contract.

Pursuant to this Section, the Contractor is informed that the Performance Bond required of the Contractor pursuant to the Contract is not deemed to guarantee performance of any of the Interference Work.

Section U: Additional Contract Requirements Applicable to Work Performed in the Presence of Privately Owned Utility Facilities

The Contractor is hereby notified that pursuant to the law and franchise agreements issued by the City, certain private utility and public service companies named in Schedule U-1 ("the Companies") own and/or operate surface and/or subsurface facilities within the limits of this contract. The existence of these facilities impacts the productivity of the City work called for in the contract. In order to improve coordination of the City construction with the private utility facilities owned and/or operated by the Companies named in Schedule U-1, Article 1.06.30 of the Standard Highway Specifications of the New York City Department of Transportation, Dated August 1, 2015; and/or Articles 10.15 through 10.18 of the Standard Sewer and Water Main Specifications of the New York City Department of Environmental Protection, Dated July 1, 2014; as applicable, are amended and will be implemented as follows:

1. Means and methods for City work:

a) The Contractor is hereby notified that the utility interferences may impact the performance of, and/or interferes with, City work. The Contractor will be required to perform such utility work as directed by the Resident Engineer in order to clear all utility interferences from the project site as required for satisfactory completion of City work within specified contract schedule.

b) In areas serviced by overhead lines on poles carrying electric, telecommunication and cable system, the Contractor understands and by bidding for this contract agrees that he/she will be required to perform the public work in the presence of energized electrical overhead lines and appurtenances located in areas adjacent and/or within the project area. As a consequence he/she will select means and method of construction appropriate to maintain the safety clearances required or as permitted by electric operators in order to avoid damaging the insulation or shielding of these lines and also to prevent knocking them down.

2. Field inspection prior to construction:

Prior to the start of any contract work in areas serviced by overhead electric lines, and after the award to the apparent low bidder for this contract, the Contractor must request a field walk of the project area along with the operator of the overhead electrical facilities and the DDC Engineer-In-Charge. At that time the facility operator will confirm the type and condition of the overhead electrical lines and the sufficiency of their insulating properties with respect to the means and methods proposed by the Contractor. The Contractor must be prepared to describe in enough details his/her proposed means and methods of construction operations in order to anticipate the likelihood that electric lines insulation would be cut or otherwise compromised. Also such details will allow the facility operator to anticipate the need for added insulation and/or shielding of non-insulated lines.

3. Compensation for interference work:

Compensation for Interference Work is a matter of adjustment between the Contractor and each private utility company located within the limits of the project area and whose utility facilities are affected by City contract work. In particular, the City will not compensate the Contractor for any direct and/or indirect costs related to Interference Work, including, but not limited to, delay, lost profit, increased overhead, or any other impact costs. Upon receipt of a Notice of Award from the City, the Contractor shall immediately commence negotiations with each of the Companies concerning the manner in which and the price for which the Contractor, through its own forces or by others hired by it, will perform and be paid by the Company for all necessary Interference Work as defined above, and at known locations of City contract work, that the Company(ies) choose(s) not to perform with its(their) own forces or by specialty contractors hired by it (them) (as per “Interference Agreement”). Specialty contractors' work is limited to (i) insulation installation and removal, (ii) live gas and steam work, (iii) cleanup and disposal of hazardous materials, (iv) splicing live electrical and telecommunications facilities, and (v) work not traditionally performed by general construction contractors.

4. Interference Agreement:

a) Although the parties may negotiate an Interference Agreement in any format or manner they deem fit, the Contractor is hereby advised that the Companies have indicated to the City that they will agree to compensate the Contractor on a unit price basis for Types of Interferences encountered on this Contract in accordance to the Private Utilities reference document for SECTION U called "CET SPECIFICATIONS AND SKETCHES", dated November 2010, copy of which is available on demand.

b) The Contractor shall notify the City upon concluding an Interference Agreement with each of the Companies.

5. City contract work to continue without Interference Agreement :

If, prior to the start of construction, as directed by the City's Order to work / Notice To Proceed (OTW/ NTP) date any of the Companies and the Contractor have not concluded an Interference Agreement as described above, then the City shall issue a written "48 Hours' notice to Public Corporation" as prescribed by the City of New York Administrative Code, commonly referred to as "Order-Outs" and City construction will proceed as ordered and the Contractor will be directed by the Resident Engineer (RE) to perform the City work on Time, Material and Equipment basis (T&M) as specified in standard City contract agreement Article 26.2. T&M records will include identification of types of utility facilities interfering with City work, utility facility owners, specifying the nature and quantity of any materials, plant and equipment furnished or used in connection with the performance of such work and crew size, such as: name and number of each worker employed on such work. T&M records will also indicate the hours of active time, standby time and idle time. The Company (ies) and the Contractor will maintain separate records of the actual quantity and cost of labor, materials, and equipment expended, and will provide copies of this information to the other party on a daily basis for reconciliation. These T&M records along with cost evaluations will be submitted daily to the Resident Engineer for review and approval. The total cost of City work will be based on quantity of work performed multiplied by unit price contract bid items. The total interference cost will be calculated as the difference between the total

T&M cost and total cost for City work. The Resident Engineer will conduct a monthly reconciliation session of the daily T&M records with the affected Company (ies) and the Contractor. If the Contractor and affected utility companies cannot reconcile their T&M records, by the last day of each month, then the Resident Engineer will submit the approved City's T&M records along with total cost evaluations to the DDC Director of Construction who will review these records and recommend approval and validity certification by the DDC Construction Assistant Commissioner.

a) Copies of the DDC approved and certified T&M records will then be transmitted by the DDC to the Contractor and the utility companies. These certified records may be used by the Contractor for compensation claims against the responsible private facility owners, or may be used by any party as supporting documentation in dispute regarding compensation for performing Interference Work. The Contractor will be required to perform City work while invoices are submitted by the Contractor to the Utility companies for payment within 30 days, or while compensation disputes between the Contractor and affected company (ies) are submitted to Binding Arbitration process described in Paragraph 9.
b) All issues related to utility work and/or delays due to compensation disputes or claims against utility companies are not allowable as justification for granting contract time extensions or delay claims against the City. The City may assess liquidated damages specified in the contract for net overall delays suffered by City contract work as a result of utility issues, disputes and claims.
c) The standard City contract dispute resolution process specified in Article 27 "Presentation of disputes to Commissioner", of the standard City contract agreement is not applicable to any disputes related to utility work and/or compensation for such work or claim against utility companies. Utility work issues, disputes and claims may only be submitted to Binding Arbitration process described in Paragraph 9.
d) The Contractor will notify the Resident Engineer when utility work that require the intervention of company utility specialty crews causes excessive contractor's labor and equipment standby or idleness and, thereby jeopardizing the City project

schedule. The Resident Engineer will submit the facts to the DDC Director of Construction who will recommend to the DDC Deputy Commissioner regarding the issuance of a “48 Hours’ notice to Public Corporation” to the concerned utility company as authorized by the New York City Administrative Code Section 19-143 and/or Section 24-521 as applicable.

e) Utility delays caused by utility and/or by unavailability of utility specialty crews cannot be discounted for earning any contractual bonus when such bonus clause is included in a contract. However, if such specified bonus is not earned or is disallowed by the City or if the City assesses specified liquidated damages as a result of such excessive delays, the Contractor may seek damages from the responsible utility company (ies).

6. Extra utility work with Interference Agreement:

If during construction the Contractor encounters utility facilities interferences or utility scope of work that it believes is not covered by the Interference Agreement as described above, then the Contractor shall immediately notify the Company in writing, with a copy to the City, describing the nature and location of the extra work in question. The Company then has five (5) business days to investigate the conditions and then:

a) Advise the Contractor and the City in writing that no interference with its facilities exists at the location in question, and hence that the Contractor may proceed with City work without providing for any impact from Company facilities;
b) Advise the Contractor and the City in writing that the Interference Agreement negotiated pursuant to Paragraph 4, provides for the scope of work encountered.
c) Advise the Contractor and the City in writing that it intends to perform the necessary utility Work with company forces or with its own contractor including, but not limited to, relocating its facility out of the way of the proposed City work. In this case, the Company shall provide a written schedule for the performance of the utility work it proposes to perform, which shall be subject to approval by

the City based on its impact to the Contractor's currently approved progress schedule. Upon approval of the Company's schedule by the City, the Contractor shall provide access to the worksite to the Company and/or any contractors hired by it to perform this utility work. If necessary, the City may grant a contract time extension for delays caused by the performance of such utility work by the company.

d) Reasonably specify in writing the scope of work to be performed by the Contractor on behalf of the Company that is not covered under the Interference Agreement negotiated pursuant to Paragraph 5, including, but not limited to, relocating, supporting, and/or protecting the Company's facilities, and/or shifting the City facility if approved by the Resident Engineer, and/or otherwise changing its operations to work in the presence of the Company's facilities. Should the Company elect this option, it must adequately define and provide an initial price offer for the work required to be performed.

7. Means and Methods for utility work:

Upon receipt of the Company's determination pursuant to Paragraphs 6.b, or 6.d, above, the Contractor shall determine reasonable means and methods of performing the work defined by the Company. These means and methods are subject to approval of the Company, which shall not be unreasonably withheld. If, however, the Company objects to the Contractor's proposed means and methods then it shall define an alternate method of construction. Upon receipt of the Company's approval or its proposed alternate method of construction, the Contractor shall commence performance of the work defined by the Company as soon as possible, and shall perform the work in a good, workmanlike, and efficient manner, using the means and methods approved by the Company, in order to permit the City work to proceed in the most expeditious manner possible, but without imposing unreasonable and/or unnecessary costs on the Company. It is expressly understood by all parties that the City's rights pursuant to Article 4 of the Contract apply to Utility Work performed pursuant to this Section.

8. Disputed utility work covered by an interference agreement:

The City Work will continue as described in Paragraph 5 above. In the event of any dispute between the Company (ies) and the Contractor regarding any issue related to the performance of, or payment for, utility work, including, but not limited to, any indirect or impact costs incurred by the Contractor due to the Utility Work and/or to the existence of facilities owned or operated by the Company (ies) on the line of the work. The Company (ies) and the Contractor hereby agree to submit to each other a “Final Offer,” in writing, by certified mail. Each party shall then have three business days to consider each other’s Final Offer. In the event that neither party accepts the other’s Final Offer within those three days, the Company (ies) and the Contractor agree to immediately submit the dispute to binding arbitration as described in Paragraph 9. During the pendency of any arbitration, the Company (ies) and the Contractor shall maintain separate records of the actual quantity and cost of labor, materials, and equipment expended, and to provide copies of this information to the other party on a daily basis for reconciliation. Any and all disagreement with the records maintained and provided by the other, must be documented in writing to all parties. However, these records are solely for the benefit of presentation to the arbitrator, whose decision may not necessarily be based on these records and in any event is final. Both parties should be aware that the City will not confirm or deny the accuracy of any records that is not certified by DDC.. While the arbitration is pending, the Company shall pay the Contractor on a monthly basis, based on the price offered by the Company to the Contractor for the performance of the work.

9. Arbitration of utility work:

The arbitration of the issues described above shall be conducted pursuant to the Construction Industry Arbitration Rules of the American Arbitration Association (hereinafter "the Rules" and “AAA”) in effect on the date the arbitration is initiated except as set forth herein. The arbitration award shall be final and binding upon the parties to the arbitration and judgment upon the award may be entered in a court having jurisdiction.

(a) Once an arbitrator(s) has been appointed by the AAA, the arbitration shall be scheduled as promptly as possible given the arbitrator(s) and the parties' schedules.

(b) No later than seven days prior to the first arbitration hearing, Company and the Contractor shall submit to the arbitrator(s), and to each other, a summary of each party's respective position and such other information as is deemed appropriate, along with a copy of each party's Final Offer as specified in Paragraph 8.

(c) The arbitration shall be conducted and concluded in two days.

(d) On the morning of the first day of the arbitration, the Contractor and/or representatives shall have 3 ½ hours to make a presentation of its claim to the arbitrator. During its presentation, the Contractor shall not be permitted to produce any documents or cost records which have not already been provided to the Company. The Contractor shall be permitted to produce any analysis or description of its claim which has been prepared for the purpose of its presentation.

(e) Company and/or its representatives shall have two hours to ask the Contractor questions about its claim and its presentation. Thereafter the arbitrator(s) shall have two hours to ask the Contractor questions about its claim and its presentation.

(f) On the morning of the second day of the arbitration, Company and/or its representatives shall have 3 ½ hours to make a presentation of its claim to the arbitrator. During its presentation, the Company shall not be permitted to produce any documents or cost records which have not already been provided to the Contractor. The Company shall be permitted to produce any analysis or description of its claim which has been prepared for the purpose of its presentation.

(g) The Contractor and/or its representatives shall have two hours to ask Company questions about its claim and its presentation. Thereafter the arbitrator(s) shall have two hours to ask Company questions about its claim and its presentation.

(h) Subject to the above time limitations, the arbitrator(s) may conduct the arbitration in such manner as the arbitrator(s) deems reasonable.

(i) The arbitrator(s) shall then have one week to select in writing, as the arbitrator ('s) award, that party's Final Offer which appears to be more reasonable, based on the presentations at the arbitration hearings.

(j) The arbitrator shall have no discretion to grant an award other than one of the two Final Offers submitted by the parties.

(k) Any award for work that has already been performed shall be paid on the 7th day after receipt of the arbitrator's decision, or on the 30th day after completion of the work, whichever is later. Payment for work not yet completed at the time of the arbitrator's decision shall be paid within 30 days of completion of work. Interest shall accrue from the date payment is due at the rate of 9% per annum. Either party may cause judgment to be entered in accordance with the arbitrator(s) decision in a court in the State of New York, County of New York.

(l) The arbitrator's fees and any other costs of the arbitration shall be initially shared equally by Company and the Contractor. The non-prevailing party shall then pay all arbitrator's fees and costs of the arbitration and shall reimburse the prevailing party for its share of such fees and costs theretofore paid.

(m) The parties may, at any time, settle any matter submitted to arbitration.

10. Order-out waiver:

The Contractor and all subcontractors hired by it, if an Interference Agreement is executed as specified between the concerned parties, agree to waive any rights they may have, if any, under law, contract or otherwise to compel the City to assert any right the City may have, including the issuance of any directives required under the New York City Administrative Code, Section 19-143 and Section 24-521, to require any or all of the Companies to maintain, repair, replace, protect, support, shift, alter, relocate, and/or remove utility facilities in connection with the work to be performed under this contract. However, nothing in this Section shall preclude the City from exercising its rights under the Law to issue such a directive to the Company.

11. Cost of insurance:

Each of the named Companies, at their option and if an Interference Agreement is executed as specified between the concerned parties, may be named as an additional insured on all insurance policies required to be maintained under this contract. In the event that a Company opts to be so named as an additional insured, the actual incremental cost, if any, to the Contractor of providing such insurance coverage shall be borne by that Company. The Contractor shall provide a written statement from its insurance provider documenting the actual cost of this added coverage to the Company. Under no circumstances shall the cost of insurance coverage on behalf of any Company be borne by the City. Nothing in this paragraph shall be interpreted to imply the City's acceptance of any additional responsibility or liability for any matter related to the performance of Utility Work. In particular, the Company and the Contractor bear joint and full responsibility to ensure that any Utility Work performed by the Contractor is in compliance with all applicable government and Company regulations.

12. Cost of utility interference work:

The Companies, by virtue of a prior agreement with the City, have agreed to perform their obligations described in this section. It is expressly understood that the cost of Utility Work or any delays cost caused by such utility work shall not be a charge against the City, but shall be a matter for adjustment between the Contractor and the Company or Companies concerned. The City and the Contractor agree that the Companies are third party beneficiaries of this Section of the contract, if an Interference Agreement is executed between the Contractor and utility company (ies). The provisions of this Section shall govern in all cases where Company property interferes with or is about to be disturbed by the City work, notwithstanding any other provision of the Contract, except for Natural Gas transmission/distribution facilities covered subject to the Gas Facility Cost Allocation Act (GFCAA) and covered separately in this contract.

13. Default declaration:

The Contractor agrees that the provisions of this Section are material provisions of the contract, and that the Contractor's failure to comply with the procedures set forth above are sufficient for the Commissioner to declare the Contractor in default pursuant to Article 48 of the Contract.

14. NYS Labor Law:

The Contractor is hereby advised that New York State Labor Law and/or, Davis-Bacon Act if federally funded, applies to public work. The work described in this Section U of the contract performed by utility company (ies) with their own forces or vendors hired by such company (ies) is not public work.

15. Facility operators:

The insurance requirements in Paragraph 11 of this Section U apply to: (i) additional Companies, if any, who were not named in Schedule "A" but which have executed an Interference Agreement with the Contractor for utility work; and (ii) additional coverage, if any, paid for by Utility Companies whose utility facilities are located within the project limits, that they may require for the utility work pursuant to an Interference Agreement between the Contractor and such utility company (ies).

[End]

"STANDARD UTILITY LETTER OF AGREEMENT"

(Name)
Deputy Commissioner, Infrastructure Division
Department of Design and Construction
30-30 Thomson Avenue
Long Island City, NY 11101

RE: City Work Performed in the Presence of Private Utility Facilities
Project No: _____

Dear (Name):

This letter is to certify that _____, has requested the inclusion of the attached "Section U: Additional contract requirements applying to work performed in the presence of privately owned utility." The company agrees to abide by the terms of this Section U at the company's own expenses due to their facilities interferences with the Public work.

Sincerely,

_____
By: Authorized Company Representative

_____
Title

NOTARY PUBLIC

CERTIFIED AS TO FORM
AND LEGAL AUTHORITY:

By:_____

SCHEDULE U-1

LISTING OF COMPANIES NAMED FOR THIS CONTRACT

COMPANY NAME	CONTACT NAME	CONTACT TELEPHONE	E-MAIL
The Consolidated Edison Company of New York, Inc. (“Coned”)	Dennis Brady	917-608-3435	BradyD@Coned.com
Charter Communications, Inc, (“Charter Spectrum”)	JOHN PIAZZA	917-731-9089	John.Piazza@charter.com
Verizon New York Inc, ("Verizon")	Aubrey Makhanlall	516-758-3705	Aubrey.n.makhanlall@verizon.com

Consolidated Edison Company of New York, Inc.

Guideline

For

Safe Entry into Sub-Surface Structures
(Electrical Enclosed Space),

Moving Energized Underground Cables

Removal of Conduit from Cables, and

Sub-Surface Structure Break Out, Rebuild & Breaking Out a Point of Entry (POE's)
Into Sub-Surface Structures

Performed by

Municipal Contractors

Table of Contents

1.0 Definitions 4
1.1 Competent Person 4
1.2 Attendant 4
1.3 Electrical Enclosed Space 4
1.4 CET Specification 4
1.5 JB Specification 4
1.6 Public Improvement Representative 4
1.7 Municipal Contractor 4
1.8 Electrically Competent Qualified Municipal Contractor 4
2.0 References 5
2.1 OSHA Section 1910.269 5
2.2 Training 5
3.0 Safe Entry into Sub-Surface Structures, (Electrical Enclosed Space) 6
3.1 Purpose 7
3.2 Application 7
3.3 Guideline 7
3.4 Inspection/Testing 7
3.5 Job Briefing 8
3.6 Attendants 8
3.7 Hazardous Atmosphere 8
3.8 Personal Protective Equipment 8
3.9 Con Edison Personal Protective Equipment Guideline 8
3.10 Access 9
4.0 Removal of Conduit from Cables, Moving Energized Underground Cables & Working in Open Trenches / Excavations that Contain a D-Fault. 9
4.1 Purpose 10
4.2 Application 10
4.3 Guideline 10
4.4 Job Briefing 10
4.5 Removal of Conduit from Cables 10
4.6 Visual Inspection 14
4.7 Cable Moving Operations 14
4.8 Working in Open Trenches/Excavations that Contain an Energized a D-Fault 16
4.9 Personal Protective Equipment 16
5.0 Sub-Surface Structure Break Out/Rebuild or Breaking Out a Point of Entry (POE's) in an Electrical Enclosed Space 16
5.1 Activities Prior to Sub-Surface Structure Break Out, Rebuild or Creating POE's. 17
5.2 Structure or POE Break Out Operations 17

APPENDIX – A – Breaking Out Conduit Checklist, On-the-Job Training (OJT) & Video 19
Appendix B – PI Check Point Tasks..... 28

1.0 Definitions

1.1 Competent Person – As a general rule, a Competent Person is an individual who, by way of training and/or experience, is knowledgeable of OSHA and other applicable standards, can identify workplace hazards relating to the specific operation and is designated by the employer with the authority to take all appropriate actions necessary to comply with all applicable standards and take prompt corrective measures to eliminate the hazards. Some OSHA standards add additional specific requirements that must be met by the Competent Person.

1.2 Attendant – An authorized individual who is stationed outside a sub-surface structure or an Electrical Enclosed Space to monitor the authorized entrants and to perform duties assigned including aiding individual(s) inside the sub-surface structure or Electrical Enclosed Space.

1.3 Electrical Enclosed Space – OSHA defines an Electrical Enclosed Space as a working space, such as a manhole, vault, tunnel, service box, or shaft, used for the operation and maintenance of electric power generation, transmission, and distribution lines and equipment. An Electrical Enclosed Space has a limited means of egress or entry and is designed for periodic entry under normal operating conditions. Under normal conditions, an Electrical Enclosed Space does not contain a hazardous atmosphere but may contain a hazardous atmosphere under abnormal conditions.

1.4 CET Specification – CET Specification defining private utility work within Municipal Construction Contracts.

1.5 JB Specification – Joint Bid specification defining private utility work within a NYC DDC Capital contract.

1.6 Public Improvement Representative – Con Edison employee, (Inspector, Construction Representative, Chief Construction Inspector, Project Specialist, or Manager) assigned to the Public Improvement section.

1.7 Municipal Contractor – Construction municipal contractor performing work for Municipal, State or other Public Agencies or Authorities.

1.8 Electrically Competent Qualified Municipal Contractor – is a Municipal Contractor employee designated and documented by the Municipal Contractor employer, in writing, as the electrically competent and qualified person who, by way of training and/or experience has the skills and techniques necessary to distinguish exposed live parts from other parts of electrical equipment, can identify non-insulated conductors from insulated conductors and/or cables and has the knowledge of the precautionary techniques, personal protective equipment, insulating and shielding materials, and insulated tools that are required for working on or near exposed energized electrical equipment. The Electrically Competent Qualified Municipal Contractor (ECQMC) employee can identify varying workplace electrical hazards relating to the specific operation and has the authority to take appropriate actions, as required. To meet the task specific qualifications of this guideline, the ECQMC employee must be familiar with this document, be able to demonstrate adherence, conduct job briefings and be present during critical tasks and/or operations to ensure that all crew members understand hazards associated with the job, work

procedures involved, special precautions, energy source controls and personal protective equipment requirements. The ECQMC should be onsite during the performance of all tasks in which ECQMC employees may be exposed to electrical hazards either noted in applicable sections of this guideline and/or listed in Appendix B – PI Check Point Tasks.

2.0 References

2.1 OSHA Section 1910.269 – Electric Power Generation, Transmission & Distribution & 1926 Subpart V –Electric Power Transmission and Distribution

2.2 Training

The OSHA Office of Training and Education (OTE) develops, directs, oversees, manages and ensures implementation of OSHA's national training and education policies and programs in support of OSHA's strategic goals with the objective of reducing occupational hazards through direct intervention, promoting a safety and health culture through compliance assistance, cooperative programs and strong leadership and maximizing OSHA effectiveness and efficiency by strengthening capabilities and infrastructure.

All Municipal Contractor employees shall be trained in and familiar with the safety-related work practices, safety procedures, and other safety requirements in section 1910.269(a)(2) and 1926 Subpart V that pertains to the Municipal Contractor employees' respective job assignments. Municipal Contractor employees shall also be trained in and familiar with any other safety practices, including emergency procedures, such as manhole rescue, that are not specifically addressed by this referenced section but that is related to their work and is necessary for their safety.

Con Edison manhole inspection and underground awareness training can be scheduled through the Con Edison TLC upon request of the municipal contractor. OSHA 10 certification cards and CPR / First Aid training are prerequisites.

2.2.1 Electrically Competent Qualified municipal contractors shall also be trained and competent in:

a- The skills and techniques necessary to distinguish exposed live parts from other parts of electrical equipment

b- The skills and techniques necessary to determine exposed live parts from other parts, (determination of non-insulated conductors from insulated conductors / cables).

c- The knowledge of the precautionary techniques, personal protective equipment, insulating and shielding materials, and insulated tools that are required for working on or near exposed energized parts of electrical equipment. Generally, the Municipal Contractor will not be required to work on or near exposed/non-insulated energized parts of electrical equipment or cables. In the event special conditions exist requiring working near exposed/non insulated energized parts of electrical equipment or

cables, the Municipal Contractor shall cease working and immediately contact the authorized Con Edison Inspector so that a further assessment of the condition can be evaluated, and appropriate guidance provided.

d- The Electrically Competent Qualified Municipal Contractor employee shall determine, through regular supervision and through inspections conducted on at least an annual basis that each Municipal Contractor employee is complying with the safety-related work practices outlined in this guidance document. Prior to entry into structures outlined in this procedure, the ECQMC employee shall ensure that any employee entering is trained and qualified.

2.2.2 A Municipal Contractor employee shall receive additional training (or retraining) by the Electrically Competent Municipal Contractor under any of the following conditions:

a- If the Electrically Competent Qualified Municipal Contractor employee indicates that the Municipal Contractor employee is not complying with safety-related work practices

b- If new technology, new types of equipment, or changes in procedures necessitate the use of safety-related work practices that are different from those which the Municipal Contractor employee would normally use

c- If the Municipal Contractor employee must employ other safety-related work practices that are not normally used or that require modification from those stated in this guidance document

Note: OSHA requires retraining before commencing with a task that has not been performed within one year.

The required training shall be of the classroom and/or on-the-job type. The training shall establish Municipal Contractor proficiency in the work practices required and shall introduce the procedures necessary for compliance. The Electrically Competent Qualified Municipal Contractor shall certify that each Municipal Contractor employee has received the training required and retains records of this training to be supplied upon request by Con Edison.

3.0 Safe Entry into Sub-Surface Structures, (Electrical Enclosed Space)

All subsurface electric cable systems and related components shall be considered to be energized until they have been verified as being de-energized by qualified Con Edison electrical personnel. Prior to the state of conduit removal operations, the identity and content of the facility (conduit and cable contained therein) shall be

verified utilizing applicable Con Edison maps & plates. In case of any safety concern, the option of de-energizing shall be discussed with the PI Representative. Caution shall always be employed whenever conduits are opened to expose the interior, even if the Con Edison maps and plates indicate no live facilities.

3.1 Purpose

To establish a guideline that shall be employed for safe entry into Con Edison sub-surface structures by Municipal Contractors.

3.2 Application

Municipal Contractor personnel

3.3 Guideline

This guideline provides the requirements for practices that shall be employed for safe entry into Con Edison sub-surface structures. Municipal Contractor personnel requiring entry into Con Edison sub-surface structures shall adhere to this guideline.

3.4 Inspection/Testing

Prior to entry into a Con Edison sub-surface structure, properly trained and qualified Con Edison electrical personnel must conduct an inspection. The inspection will determine if the condition of the electrical facilities contained therein is sufficient to allow need based unrestricted access. The Con Edison electrical personnel will communicate to both PI Representative and to the ECQMC personnel any safety precautions to be taken and that the subsurface structure is safe for entry and document such findings. Any condition deemed to be un-safe through this formal inspection process would preclude granting access.

An inspection must take place daily prior to Municipal Contractor entry. Once the cover is placed on the electric subsurface structure another inspection must occur prior to Municipal Contractor entry unless the ECQMC has met the requirements outlined in Section 4.7.a. Inspections include but are not limited to:

1) Testing for stray voltage by a qualified Con Edison employee or an ECQMC employee who has completed applicable Con Edison training courses.

2) Completion of atmospheric testing.

3) Determination that it is safe to enter the space.

4) A visual inspection for any abnormalities previously defined.

5) Communication of inspection results and hazards to the Con Edison inspectors and the municipal contractor supervisor.

6) A copy of the underground inspection form can be reviewed in the field with the PI Representative in consultation with the qualified Con Edison electrical personnel upon request by the ECQMC.

3.5 Job Briefing

The Electrically Competent Qualified Municipal Contractor in charge shall conduct a job briefing with the municipal contractor's employees involved before they start the job. The briefing shall cover: the hazards associated with the job; work procedures involved; special precautions; and personal protective equipment requirements. The Electrically Competent Qualified Municipal Contractor shall instruct that all cables are to be treated as energized. Additional briefings shall be held if significant changes, which might affect the safety of the municipal contractor's employees, occur during performance of the work. The Electrically Competent Qualified Municipal Contractor shall document completion of the job briefing. A copy of the documented job briefing shall be available upon request by Con Edison.

3.6 Attendants

While work is performed in a Con Edison sub-surface structure, a Municipal Contractor Attendant shall be available in the immediate vicinity to render emergency assistance. Sub-surface structure Attendants shall comply with applicable OSHA requirements.

3.7 Hazardous Atmosphere

Municipal Contractor personnel shall perform a documented hazardous atmosphere test before entry into any Con Edison sub-surface structure and perform continuous air monitoring in compliance with applicable OSHA requirements. Any atmospheric reading deemed to be un-safe would prohibit access to the structure. The Municipal Contractor shall immediately notify the authorized Con Edison Inspector.

3.8 Personal Protective Equipment

Municipal Contractor personnel requiring entry into Con Edison sub-surface structures shall refer to and comply with applicable OSHA requirements regarding the use of Personal Protective Equipment when performing this work. Con Edison also requires that Municipal Contractor personnel assigned to work inside Con Edison sub-surface structures shall always wear Flame Resistant (FR) Clothing with a rating of 8 cal/cm^2 or HR2, wear a retrieval harness, and that a retrieval device be on location. In addition, an atmospheric tester must be in use continuously anytime a structure is occupied. See section 3.9 for Matrix on Con Edison's Personal Protective Equipment Guideline.

3.9 Con Edison Personal Protective Equipment Guideline

	Task	Class 0 Gloves	FR Clothing	FR Hood	Blast Goggles	Face Shield	Safety Glasses
1	Pavement breaking	N	N				Y
2	Breaking out concrete encased duct	Y	Y			Y	Y
3	Moving energized primary cables that are located outside a structure while in proximity to joints	Y	Y	Y	Y		

4	Moving primary cables outside a structure (no joints involved)	Y	Y				Y
5	Moving energized secondary cables	Y	Y				Y
6	Hand excavate to locate precast ducts	N	N				Y
7	Hand excavate to locate direct buried cables	Y	Y				Y
8	Removing cable from conduit	Y	Y				Y
9	Breaking structure for POE from outside/inside	Y	Y			Y	Y
10	Breaking sub-structure walls	Y	Y				Y
11	Pulling rope within structure with energized cable	Y	Y				Y
12	Pulling rope in enclosed spaces	Y	Y				Y
13	Building a bench or platform within a subsurface structure to support or protect cables.	Y	Y				Y
14	Breaking out unknown precast electric duct	Y	Y				Y
15	Using digging bar over electric facility	Y	N				Y
16	Using digging bar over direct buried cables	Y	Y				Y
17	Using Pneumatic clay digger in vicinity of electric facility	Y	Y				Y
18	Installing forms for field-constructed sub- surface structures from inside the designed footprint when connected cables are present	Y	Y				Y
19	Installing forms for field-constructed subsurface structures from outside the designed footprint when connected cables are present	N	N				Y
20	Installing forms for field-constructed subsurface structure prior to first energization of new cables	N	N				Y
21	Saw cutting operation	Y	N				Y
22	Hand excavate to locate cable fault	Y	Y				Y
23	Hand excavating to find service dead leg	Y	Y				Y
24	Removing underground silo	Y	Y				Y
25	Regrade	Y	N				Y
26	Build/remove shunt box w/ energized cable inside	Y	Y				Y

3.10 Access

Municipal Contractor personnel shall not climb into or out of Con Edison sub-surface structures by stepping on cables or hangers.

4.0 Removal of Conduit from Cables, Moving Energized Underground Cables & Working in Open Trenches / Excavations that Contain a D-Fault.

4.1 Purpose

Establish a guideline that shall be employed by Electrically Competent Qualified Municipal Contractor personnel, meeting OSHA & Con Edison training requirements, when removing conduit from cables and moving Con Edison energized underground cables located outside or inside structures and working in open trenches / excavations that contain a cable with a D-Fault condition.

4.2 Application

Municipal Contractor personnel

4.3 Guideline

This guideline details the requirements for practices that shall be employed when moving Con Edison energized underground cables located inside or outside of Con Edison structures. Only Electrically Competent Qualified Municipal Contractor personnel who have been trained and meet necessary OSHA & Con Edison requirements for moving energized underground cables in accordance with the following directions shall perform movement of energized cables on the Con Edison system.

4.4 Job Briefing

The Electrically Competent Qualified Municipal Contractor in charge shall conduct a documented job briefing with the Municipal Contractor's employees involved before the start of the job. The briefing shall cover: the hazards associated with the job; work procedures involved; special precautions; and personal protective equipment requirements. The Electrically Competent Qualified Municipal Contractor shall instruct that all cables are to be treated as energized. Additional briefings shall be held if significant changes, which might affect the safety of the Municipal Contractor's employees, occur during the course of the work. The Electrically Competent Qualified Municipal Contractor shall document completion of the job briefing. A copy of the documented job briefing shall be available upon request by Con Edison.

4.5 Removal of Conduit from Cables

All subsurface electric cable systems and related components shall be considered energized. Caution shall always be employed whenever conduits are opened to expose the interior cable. Refer to Appendix A for additional requirements and resources.

4.5.1. Pre-cast Concrete Conduit

a- The conduit shall be fractured by striking the top end corner of the conduit with a 3 lb. hammer equipped with a non-conductive handle. When fracturing the conduit, all impact/chipping action shall be performed in such a manner to be directed across the top of the conduit away from any cable that may be inside of the conduit.

b- A small piece of the concrete conduit shall be chipped away so that a visual examination of the interior of the conduit can be made to verify the presence of cable. All impact/chipping actions shall be performed in such a manner to be directed across the top of the duct, away from the cable.

c- If cable is present, concrete-chipping operations shall continue until enough material has been removed to permit insertion of a non-conductive protective shield barrier between the conduit and cable or as directed by the authorized Con Edison Inspector based on existing field conditions. Material such as exterior grade plywood or lumber (min. thickness ¾") or suitably reinforced plastic sheet material (min. thickness 0.060" – e.g., Norplex Micarta NEMA Grade G-3 or G-10) shall be used for this purpose. This shield material shall provide protection for the cable during the remaining conduit removal operations. The remainder of the conduit shall be fractured using the 3 lb. hammer equipped with a non-conductive handle. Care shall be taken to avoid any impact upon the cable, either by direct or indirect hammer blows.

d- During and after conduit removal operations, cable/conduit shall be properly supported as indicated in Section 4.7, below.

4.5.2 Concrete Encased Conduit

a- The concrete encased conduit (including but not limited to pre-cast, fiber, tile, clay), shall be fractured by striking the top end corner of the conduit with a 3 lb. hammer equipped with a non-conductive handle. When fracturing the conduit, all impact/chipping action shall be performed in such a manner to be directed across the top of the conduit away from any cable that may be inside of the conduit.

b- For concrete encased conduit, it may be necessary to employ a handheld cold chisel (in conjunction with the 3 lb. hammer) to remove concrete encasement. If a chisel is utilized, all impact/chipping actions shall be performed in such a manner to be directed across the top of the duct, away from the cable.

c- If the concrete encasement is so dense as to render the use of a hammer and handheld chisel non-effective, an 8-pound sledgehammer may be employed. If neither of these devices proves effective, the use of a pneumatic chipping hammer will be permitted. The weight/size of the pneumatic chipping hammer shall not exceed 20 lbs. When utilizing a pneumatic chipping hammer, the device shall be securely positioned and be under close operator control at all times. The tool bit used for these operations shall be chisel shaped with a minimum width of two (2") inches. All impact/chipping actions shall be performed in such a manner to be directed across the top of the duct, away from the cable.

e- A small piece of the concrete conduit shall be chipped away to permit verification of the presence of cable inside the conduit.

f- If cable is present, concrete-chipping operations shall continue until enough material has been removed to permit insertion of a non-conductive protective shield barrier between the conduit and cable or as directed by the authorized Con Edison Inspector based on existing field conditions. Material such as exterior grade plywood or lumber (min. thickness ¾") or suitably reinforced plastic sheet material (min. thickness 0.060" – e.g., Norplex Micarta NEMA Grade G-3 or G-10) shall be used for this purpose. This shield material shall provide protection for the cable during the remaining conduit removal operation.

g- After installation of the shield material has been completed, continue removal of remaining conduit and encasement, using handheld and power tools.

h- During and after conduit removal operations, cable/conduit shall be properly supported as indicated in Section 4.7, below.

4.5.3 Wood Conduit

a- Wooden conduit shall be split using a handheld cold chisel and a 3 lb. hammer equipped with a non-conductive handle. All impact/chipping action shall be performed in such a manner to be directed across the top of the conduit away from the cable.

b- The chisel shall use to create a small window in the conduit that will permit a visual inspection of the conduit interior for the presence of cable.

c- If cable is present, wood conduit material shall continue to be removed until enough material has been removed to permit insertion of a non-conductive protective shield barrier between the conduit and cable or as directed by the authorized Con Edison Inspector based on existing field conditions. Material such as exterior grade plywood or lumber (min. thickness ¾") or suitably reinforced plastic sheet material (min. thickness 0.060" – e.g., Norplex Micarta NEMA Grade G-3 or G-10) shall be used for this purpose. This shield material shall provide protection for the cable during the remaining conduit removal operation.

d- After installation of the shield material has been completed, continue removal of remaining conduit

e- During and after conduit removal operations, cable/conduit shall be properly supported as indicated in Section 4.7, below.

4.5.4 HDPE Conduit

a- HDPE conduit shall be split using hand tools or a handheld pneumatic rotary cutting tool. All splitting/cutting actions shall be performed in such a manner to be directed across the top of the duct, away from the cable.

b- Pneumatic Rotary Cutting Tool – A pneumatic rotary cutting tool, with a depth guide, shall be used to score an access area in the surface of the conduit. Prior to application of the cutting tool to the surface of the conduit, the depth collar on the pneumatic rotary cutting tool shall be set so that the cutting bit will penetrate approximately ¾ of the wall thickness of the conduit. After the conduit has been cut to the maximum depth allowable (such that the bit does not fully penetrate the thickness of the conduit), a 3 lb. hammer shall be used to knock out the access area (window) outlined by the cutting tool. This will permit visual inspection of the conduit interior for the presence of cable.

c- If inspection of the interior of the conduit reveals that cable is present, a non-conductive protective shield barrier shall be inserted into the conduit between the conduit and cable. This shield material shall provide protection for the cable during the remaining conduit removal operations. Material such as exterior grade plywood or lumber (min. thickness ¾") or suitably reinforced plastic sheet material (min. thickness 0.060" – e.g., Norplex Micarta NEMA Grade G-3 or G-10) shall be used for this purpose. This shield material shall provide protection for the cable during the remaining conduit removal operations.

d- If inspection of the conduit interior does not reveal the presence of cable, the remaining conduit may be removed using the tool choices mentioned in 4.5.4.a.

4.5.5 Metal Conduit

a. When removing metal conduit, the Municipal Contractor shall first excavate and expose a collar connecting two sections of conduit. Once the collar is accessible, split and/or cut the collar off with a cutting tool that has a depth guide to inspect the conduit interior for the presence of cable. If a metal conduit collar is NOT easily accessible or found within 20 to 40 feet of open excavation, proceed to section 4.5.5.b. Note: If the work to be performed is in response to a suspected natural gas leak or in the presence of natural gas, only the use of non-powered hand tools is allowed. If work is required in the presence of a natural gas leak, further guidance will be provided by the PI Representative in consultation with Con Edison's Gas Engineering Department

b. If a collar connecting two sections of conduit cannot be found, metal conduit will be split using hand tools and/or a handheld rotary cutting tool. All splitting actions will be directed across the top of the conduit, away from the cable. Note: If the work to be performed is in response to a suspected natural gas leak or in the presence of natural gas, only the use of non-powered hand tools is allowed. Further guidance will be provided by Gas Engineering.

c. Score the outline of an access area onto the surface of the conduit. Do not fully penetrate the conduit with the tool while making this outline.

d. Use this outline as a guide for further splitting and cutting operations that will eventually create a viewing window into the conduit.

e. If inspection of the conduit interior reveals the presence of cable, insert a non-conductive protective barrier between the cable and conduit wall. The barrier will provide physical protection for the cable during remaining conduit removal operations. Materials including, but not limited to, exterior grade plywood, lumber, and Norplex Micarta are acceptable. After the installation of the non-conductive protective barrier, the removal of the remaining conduit may proceed using the tool choices mentioned in section 4.5.5.b.

f. If inspection of the conduit interior does not reveal the presence of cable, the remaining conduit may be removed using the tool choices mentioned in section 4.5.5.b.

4.6 Visual Inspection

a- A visual inspection of cables located outside Con Edison structures that will be moved, shall be performed by Electrically Competent Qualified Municipal Contractor personnel or the authorized Con Edison Inspector.

b- After the conduits have been broken out (removed from the cables), the exposed cable(s) shall be inspected by the Electrically Competent Qualified Municipal Contractor personnel.

c- The cables shall be visually inspected by the Electrically Competent Qualified Municipal Contractor personnel and determined to be free from any of the defects that would prevent relocation. Cable(s) shall be free of cracks, tears, and evidence of oil stains, swelling, or melting of the insulation. Cables shall not have any exposed conductor.

4.7 Cable Moving Operations

a- Municipal Contractor personal shall not move any cables or splices within an electrical manhole. Moving cables within an electrical manhole and splices regardless of location may only be performed by qualified Con Edison electrical personnel unless the Municipal Contractor personnel has completed applicable Con Edison training courses and has provided written proof of said training to the PI Representative. Whenever cables located in open excavations are moved, the Municipal Contractor shall protect the cables by ensuring the cable jacketing is not subjected to sharp edges or over bending as it exits the existing structure or the footprint of the existing structure if said structure has been demolished or is in the process of being demolished and/or rebuilt.

b- Prior to moving any cables outside of a subsurface structure, the cables located within the associated connecting subsurface structures shall be inspected in accordance with Section 3.4 of this guideline.

c- Municipal Contractor personnel meeting the training requirements and experienced in moving Con Edison cables only shall move cables.

d- Cables shall not be moved until plastic “fair-leaders” are positioned at the duct edges to prevent chaffing damage.

e- Synthetic web slings having a minimum width of two (2) inches shall support cables that have been removed from conduit. Slings shall be used in a basket hitch configuration.

f- Conduit which house cables shall be supported using slings, cable, or rope. Conduits shall be supported in such manner as to maintain alignment with one another.

g- Maximum distance between support points shall be four (4) feet.

h- To prevent inadvertent over bending of the cables, the maximum vertical or horizontal offset between supports shall be one foot (1’) for cable that is supported outside of conduit. For cable that is being moved while still installed in conduit, the conduit shall not be offset more than one foot per four-foot section of conduit.

i- Each set of cables (cables from one duct/conduit) shall be moved individually. Cables from multiple ducts/conduits shall not be moved as a bundle.

j- Relocation of cables shall always be performed in a careful manner with the movement of cable under complete control. There shall be no sudden movements of the cable or the conduit that contains cable.

k- An observer shall be positioned to determine proper slack in structures and to ensure that joints remain properly supported on rack arms and specified offsets are maintained. This observation shall be performed from outside of the structure while the cable is being moved.

l- Allowable horizontal and vertical offsets shall be determined based on applicable CET or JB item sketches and/or as directed by the authorized Con Edison Inspector.

m- Cables shall not be permitted to fall freely from temporary supports.

n- All cables supported by slings shall be visually inspected by the ECQMC personnel at the beginning and end of each work shift to ensure that no cracks, leaks, or other defects have developed.

o- Cables shall be repositioned with care when being moved into their final position for the installation of split conduit.

4.8 Working in Open Trenches/Excavations that Contain an Energized a D-Fault

4.8.1 A D-Fault is defined as an abnormal condition found on an energized primary cable or splice that is presumed to be an indication of an impending fault. If the ECQMC personnel notices an abnormal condition on cable in a trench or excavation work must stop and the PI Representative shall be notified immediately to provide further guidance. If the PI Representative in consultation with qualified Con Edison electrical personnel deem the cable condition a D-Fault, the ECQMC personnel shall follow the directions noted below to continue work.

4.8.2 At distances greater than 20 feet from the energized D-Fault, no additional personal Protective Equipment (PPE) other than that referenced in Section 3.9 is required.

4.8.3 At distances greater than 10 feet but less than 20 feet from the D-Fault, a hard-hat mounted face shield is required in addition to PPE referenced in Section 3.9 above.

4.8.4 At distances greater than eight feet but less than 10 feet from the energized D-Fault, a hard-hat mounted full-face shield and a FR Hood in required in addition to PPE referenced in Section 3.9 above.

4.8.5 At distances less than eight feet from the D-Fault, no work shall be performed.

4.8.6 Movement of D-Faulted cable is strictly prohibited.

4.9 Personal Protective Equipment

Municipal Contractor personnel moving Con Edison energized cables shall refer to and comply with applicable OSHA requirements regarding the use of Personal Protective Equipment when performing this work. See Section 3.9 for Matrix on Con Edison's Personal Protective Equipment Guideline.

5.0 Sub-Surface Structure Break Out/Rebuild or Breaking Out a Point of Entry (POE's) in an Electrical Enclosed Space

The ECQMC must be present onsite with the municipal contractor crew to conduct the documented job briefing on each day any breakout operations are to be performed. This includes structure entry for POE, structure break out and/or rebuilds. The ECQMC shall address hazards, live cables, necessary PPE with other municipal contractor employees & request assistance from the PI Representative to arrange any required inspections with qualified Con Edison electrical personnel for any cable movement or adjustments. The ECQMC should refer to section 3.0 through 3.10 & section 4.7 of this procedure for all activities required prior to sub-surface structure entry and cable moving operations respectively. A copy of the documented job briefing shall be available upon request by Con Edison.

5.1 Activities Prior to Sub-Surface Structure Break Out, Rebuild or Creating POE's

5.1.1 Prior to the start of breakout operations, the location of all conduit and cable passing through the section of the wall and beneath the structure floor that is going to be broken out shall be visually identified inside and outside the structure.

5.1.2 When there is a potential for contact between the existing cables that have been visually identified and the tool being used to break the structure, the ECQMC shall discuss with the Public Improvement Representative if there is a possibility that Electric Operations can de-energize the cables that are in the potential zone of contact prior to breaking out the structure.

5.1.3 When the cables cannot be de-energized by Electric Operations then they must be protected by using acceptable non-conductive materials as noted in Section 5.2.

5.1.4 After cables have been protected, they shall be moved by qualified Con Edison electrical personnel or an ECQMC who has met the requirement of Section 4.7 above.

5.1.5 All primary cables shall be moved by or under the direct supervision of qualified Con Edison electrical personnel.

5.2 Structure or POE Break Out Operations

5.2.1 Using caution, expose the exterior sections for the structure that is required to be broken out typically done in 2' – deep vertical sections) by carefully excavating on the outside of the structure. If conduit has been identified to be passing under the structure, take necessary precautions noted below.

5.2.2 Visually identify all conduits and cables passing through the structure and beneath the structure floor as well.

5.2.3 When there is a potential for contact between the existing cables that have been visually identified and the tool being used to break out the structure walls, roof floor and/or POE, protect the cables using fire rated (FR) wood, phenolic board, cable shields or other acceptable non-conductive materials., Cables on the walls in the POE area shall also be protected from falling debris using FR wood even if there is no potential for contact with said cables and the tool being utilized to break the structure.

5.2.4 Once all conduits and cables have been identified and protected on both the inside and the outside of the structure walls and beneath

the structure floor; and the structural integrity of the proposed break out area has been confirmed using hand tools, use the appropriate tool (up to and including a 90-pound jackhammer) to break out the section of structure wall, roof or floor that was previously prepared for break out

5.2.5 If a jackhammer is being used for the structure wall, roof, floor or POE breakout operation, where feasible, support the tool from underneath to prevent slippage.

5.2.6 Where possible, the use of a 90 lb. jackhammer shall be avoided within 8" of a live conduit. If the ECQMC's competent person determines that the breakout can only be made using a jackhammer within 8" of live conduit, a physical barrier must be placed between the jackhammer and all facilities that could possibly come in contact with the jackhammer. The Municipal Contractor may then begin utilizing the 90 lb. jackhammer using a 3" bit or wider.

5.2.7 After the top sections of roof or wall has been broken out, continue to excavate down to expose the next section of that wall to be broken out and repeat the process starting with section 5.2.1

5.2.8 For all additional walls in the structure that need to be broken out, resume operation starting with section 5.1 of this procedure.

APPENDIX – A – Breaking Out Conduit Checklist, On-the-Job Training (OJT) & Video

Breaking-Out Conduit Pre-Job Checklist

Contractor	
Location	
Date and Time	

A new Breaking-Out Conduit Pre-Job Checklist must be completed by the Foreperson each time individuals enter or change roles, and each time a Job Briefing is administered.

Roles Review	*Name(s) of Individuals who will remain continuously on-site throughout this task's progress*	*Training in Compliance and Qualified for task?*	*Lead Person's Initials*	
			Con Edison	*Contractor*
Foreperson		Yes / No		
Individual Completing On-site Peer Check		Yes / No		
Laborer(s) performing break-out		Yes / No		
Con Edison On-Site Representative		Yes / No		

Layout and Activity Review	
Layout #	
Duct(s) in Trench/Manhole	
Duct Type (CD, CED, HDPE, Metal)	
Are there Primary / Secondary electric lines? - What is energized? At what voltages?	
Are duct banks clear of all debris?	
Is there line of sight and all edges and corners?	
Will cable be moved? If so, to where and how will it be supported?	
How will bodies and tools be positioned?	

Personal Protective Equipment	
☐ Safety Boots	☐ 0 kV Gloves (Test Date on gloves: _____)
☐ Hard Hat	☐ Leather Gauntlets
☐ Safety Glasses	☐ Is a Harness Required? (EO-10130)
☐ Face Shield	☐ FR Hood and Goggles (if Primary in structure)
☐ Flame Retardant Coveralls	

Tools - *All tools to be laid out in work area prior to start of activity*	
☐ Claw Hammer	☐ Chipping Gun, must be less than 20 lbs. - Recommended 2"-4" piston stroke and < 1,500 BPM
☐ Chisel with at least 2" wide flat bit	
☐ 3 lbs. Hammer	☐ Micarta or similarly approved half-moon material
☐ 8 lbs. Sledgehammer	☐ Pneumatic Rotary Cutting Tool and Blade (HDPE pipe)

DOJT –OJT0070
PROCEDURE FOR REMOVING CONDUIT FROM UNDERGROUND DISTRIBUTION CABLE

1

conEdison

PROCEDURE FOR REMOVING CONDUIT FROM UNDERGROUND DISTRIBUTION CABLE

- Underground electric cables are protected by conduit pipes which are buried under the roadway in the ground. The conduit protects the high voltage cables placed inside them from damage from shovels, digging bars and other work activities when excavating in the area to install new equipment. Even when using these manual devices to unearth existing ducts, extreme care must be taken not to pierce, cut, or break open the duct unless the safeguards listed in the following pages are used for your safety and the protection of the cables on the inside.
- A mechanical machine such as a backhoe should never be used to excavate around electric or gas facilities. The likelihood of the facility being damaged increases significantly when such practices are used.

conEdison

GETTING PREPARED TO LOCATE DUCTS

- Before removing asphalt and concrete roadbase make sure a code 753 has been called in with the 811 center and spray marks are in place on the ground showing the path of the electric and gas lines.
- Check the spray painted mark outs against the Con Edison plates and prints. (Layout diagram, Conduit plate, Composite Feeder Plate, Low Tension mains & service and Gas Mains & Service Plate). Ask your Con Edison Representative to review these prints and the markouts with you.
- Remove concrete and asphalt within your new work zone with machine. Load out debris.
- Use a backhoe only to dig up areas where you have verified that there are no electric or gas facilities.

3

conEdison

DIGGING IN AREAS WHERE YOU HAVE ELECTRIC, GAS FACILITIES, OR HAVE DISCREPANCIES BETWEEN THE MARKOUTS AND PRINTS

- Dig only using shovels and blunt edge digging bars to find electric and gas facilities. Never strike a blunt edged digging bar straight down into the soil. Precast, HDPE, Cast Iron & plastic gas mains/services can lie a few inches under the surface and the bar can still penetrate through them if you are not careful.
- When using a digging bar on hard, compacted soil, use a sideways striking motion toward the sides of the excavation, never straight down.
- Continuously remove soil from area, keep area clean of debris, locate ducts edge to edge to keep line of sight.
- Use air lance to blow out tight areas between facilities to visualize work zone.

4

conEdison

PRE-JOB CHECKLIST

Breaking-Out Conduit Pre-Job Checklist

Roles Review	Name(s) of individuals who will remain continuously on-site throughout this task's progress	Training in Compliance and Qualified for task?	Lead Person's Initials	
			Con Edison	Contractor
Foreperson		Yes / No		
Individual Completing On-site Peer Check		Yes / No		
Laborer(s) performing break-out		Yes / No		
Con Edison On-Site Representative		Yes / No		

Layout and Activity Review

Personal Protective Equipment

Tools - All tools to be laid out in work area prior to start of activity

Adobe Acrobat Document

- A new Breaking-Out Conduit Pre-Job Checklist must be completed by the Foreperson each time individuals enter or change roles, and each time a Job Briefing is administered.
- All tools to be laid out in work area prior to start of activity

5

conEdison

PREPARE AREA FOR DUCT BREAK OUT

- Additional guidance for routine entry into electrical enclosed space is provided in GEHSI-S17.01 – Electrical Enclosed Space Entry.
- Once you have dug down and located duct banks make sure you clear all debris (soil, rocks) from the trench to visually have a line of site of all edges and corners.
- Determine if you need to remove the duct/s from the electrical conduit to move them to make room for the installation of additional new facilities. (WINGBACK).
- <u>If necessary to conduct a removal:</u> Address the PPE Requirements, work procedures and tools to be used on the following pages with the workers. Stress the importance of following procedures to avoid a high hazard injury such as shock or burns. Document in your safety briefing.

6

conEdison

PPE REQUIREMENTS DURING DUCT BREAKOUT IN A TRENCH OR ENCLOSED SPACE

NOTE: ONLY COTTON WORK CLOTHS UNDERNEATH FR SUITS

You must wear an FR coverall during all duct break out procedures. Remove jewelry (chains, watches, rings, earrings)

FR Coverall

You must wear Class 0 kV gloves, leather gauntlet leather protectors, helmet, safety glasses and face shield

Class 0 kV Gloves, Gauntlets, Safety Glasses, Face Shield, Helmet.

7

conEdison

PPE REQUIREMENTS DURING DUCT BREAKOUT IN AN ELECTRICAL ENCLOSED SPACE

NOTE: ONLY COTTON WORK CLOTHS UNDERNEATH FR SUITS

You must wear an FR coverall and rescue harness during all duct break out procedures inside the EES. Remove jewelry (chains, watches, rings, earrings)

FR Coverall & Rescue Harness

You must wear Class 0 kV gloves, leather gauntlet leather protectors, helmet, safety glasses and face shield

Class 0 kV Gloves, Gauntlets, Safety Glasses, Face Shield, Helmet.

8

conEdison

EQUIPMENT / TOOLS NEEDED FOR BREAKING OUT DUCTS

Precast Concrete Conduit

Only use small hammer to strike duct edges.

Insert Micarta to protect cable, keep striking away from center.

Slide Micarta along as you break off desired length of duct

Concrete Encased Duct

When breaking out concrete encased ducts the only tools to be used are: hammer, 3 lb. hammer With wood/plastic handle, chisel with 1.5" head, 8 lb. Sledgehammer by striking duct edges.

If concrete is not breaking with these tools, a 20 lb. chipping gun with a 1.5" head can be used.

Make a window in the Duct, slide in a Micarta board and continue breaking out the remaining duct.

See sequence on next page:

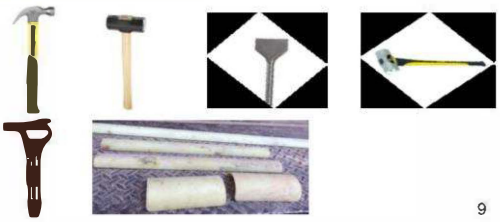

9

conEdison

CONCRETE ENCASED DUCT BREAKOUT SEQUENCE

Use a 3 lb. hammer striking edges.

Advance to hammer & chisel with 1.5" head

If this is still not working, go to #2

1

Use 8 lb. sledgehammer striking Edges, not center.

If this is still not working, go to #3

2

Use a **lightweight Chipping gun** with a 2 to 4" piston stroke with a **1.5" head** breaking toward edges, never straight down.

NEVER USE A JACKHAMMER, A RIVET BUSTER CHIPPING GUN, OR A BIT IN THE CHIPPING GUN LESS THAN A 1.5" HEAD. If this is still not working, go to #4

3

Visualize work zone when breaking away Material. Keep work zone clean. Remember That electrical ducts are usually stacked in Multiple rows and levels.

4

10

conEdison

BREAKING OUT INTERIORS OF CONCRETE/CLAY DUCTS

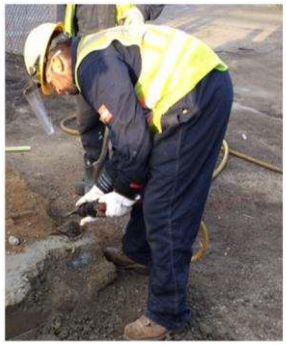

Find edges & visualize all ducts. Remember that There could be several across and underneath. Keep area clean, so you can tell configuration.

5

Break out window on each top duct found. Strike Away From the center.

6

Insert Micarta "half moon" protective insert in windows on ducts, Continue breaking top rows of ducts in a horizontal direction sliding Protective Micara down the run while breaking the top & sides.

7

11

conEdison

HDPE (PLASTIC) CONDUIT & STEEL DUCTS

Tools Needed

3 pd. Hammer, 2" chisel, Rotary Cutting Tool & Blade, Micarta protective "half moon"

PPE Needed

FR Coverall, Class 0 kV Gloves, leather gauntlets, safety glasses, face shield and helmet

12

conEdison

MAKING A WINDOW IN HDPE

Visualize top of duct bank, remove excess concrete chips & dirt.

Have line of site for sections to be removed

1

Use a rotary cutting tool to score a window In the HDPE pipe top.

Do procedure slowly and carefully.

Only score 90% of the way through the conduit.

2

Use hammer & chisel to cut away remaining plastic.

Strike away from center toward sides.
Never strike straight down.

3

Insert Micarta "half moon" protection board.

Slide horizontally into conduit. Continue to cut open the top of conduit to desired length, Moving the Micarta as you go.

Do each duct individually,

Do not lose your line of sight.

4

13

conEdison

MAKING A WINDOW IN METAL CONDUIT

Visualize top of duct bank, remove excess concrete chips & dirt.

Have line of site for sections to be removed

1

If you find a coupling connecting two Sections of metal duct, slide collar over, or cut off.

There may be a large enough section underneath to insert Micarta protection board for conduit removal.

2

Use a rotary cutting tool to score a window In the steel conduit pipe top.

Do procedure slowly and carefully.
Only score through 90% of steel conduit.

Use chisel and hammer to break away the rest striking away from center toward the corners.

3

Insert Micarta "half moon" protection board. Slide horizontally into conduit. Continue to cut open top of conduit to desired length, moving Micarta as you go.

Do each duct individually,
Do not lose your line of sight.

4

14

conEdison

NEVER USE THESE TO FIND ELECTRICAL OR GAS FACILITIES

Never use a pickaxe

Never use a backhoe Bucket, or ramhoe attachment by electric of gas facilities

Never use a sharp digging Bar.
Use blunt edge bar in a sideways motion – never straight down

Never use a jackhammer to break out ducts, or use in the vicinity of a gas main or service.

15

conEdison

QR Code for Video

Breakout Conduit

players.brightcove.net

Breakout Conduit (Spanish subtitles)

players.brightcove.net

16

conEdison

Breaking Out Conduit Video -
https://players.brightcove.net/6012566853001/default_default/index.html?videoId=6283610511001

Appendix B – PI Check Point Tasks

Public Improvement (PI) - Check Point Tasks

A PI Check Point Task is defined as a construction activity involving Con Edison facilities that warrant a briefing or discussion with the PI Representative and the Municipal Contractor. This briefing should be documented by the Municipal Contractor in accordance with the applicable sections of the PI Guideline (CONST-029) and OSHA.

Work Category	Task
Demolish Manhole (MH)	Inspect MH
	Build False Roof
	Remove Forms
	Demolish Walls
	Demolish MH Floor
Build MH	Install Forms
	Remove Forms
Wingback	Inspect Site
	Break Out Conduits / Duct Systems
Excavation	Reivew Mark-Outs
	Excavate
Backfill	Backfill Facilities
Roadway Restoration	Mill, Pave and/or Reconstruct Roadway
Electric Pipe Install	Install Conduit or Duct Systems
Structure POE's	Inspect MH or Service Box (SB)
	Move Cable(s)
MH or Service Box (SB) Regrade	Inspect MH or SB

END OF THE SECTION U (2.0)

THE SECTION U (2.0) CONSISTS OF 44 PAGES

Department of Design and Construction

D□□□S□□□ □ □□ □□□R□S□R□□□□R□
□□R□□□ □□D□S□□□

□□□□M□ □□□□

□R□□□□□ □D□□□□S□R□□

R□□□□S□R□□□□□□ □□ □□□S□□□□ S□□ □RS□S□□□□□ □S□□□D

□□□e□□er □ □□□ □□□□ □r□ □□□de□□a□□□ere□□
□□R□□□□ □□S□□□□□ □S□□□D
□□□□ □□ □□□ □□R□

_____
Contractor

**Da□ed□□□□□□

CITY OF NEW YORK
DEPARTMENT OF DESIGN AND CONSTRUCTION
DIVISION OF INFRASTRUCTURE

ADDENDA CONTROL SHEET

BID SUBMISSION DATE/ TIME: November 27, 2024; between 8:30am and 11:00am
BID OPENING DATE/ TIME: November 27, 2024; 11:30am

PROJECT No. : EC-SER25
TITLE: **R□□□□S□R□□□□□□ □□ □□□S□□□□ S□□ □RS□S□□□□□ □S□□□D**

□DD□□D□ □SS□□D	□□□□□ D□ □	D□□□	□□□R□□□D □□□ S□□□S □□□□	□□□□R□□ □□□□S□□
#1 Revisions to Documents;	0	11/01/2024		11/01/24

THE CITY OF NEW YORK
DEPARTMENT OF DESIGN AND CONSTRUCTION
DIVISION OF INFRASTRUCTURE

□□□□□□□□□

□DD□□D□M □□□□ □
FOR FURNISHING ALL LABOR AND MATERIAL NECESSARY AND REQUIRED FOR:

□□□□□□ □□□□□□□□□S□R□□

R□□□□S□R□□□□□□ □ □□ □□S□□□□ S□□ □RS□S□□□□□ □S□□□D

This addendum is issued for the purpose of amending the requirements of the Bid and Contract Documents and is hereby made a part of said Bid and Contract Documents to the same extent as though it were originally included therein.

The bidder is advised that the items listed below apply to the project:

□□ **□dders □□es□□□s a□d Res□□□ses □□ □□es□□□s□**
No Attachment A is included with this Addendum.

□□ **Re□s□□□s □□ D□□□□ e□s□**
Attachment B is included with this Addendum.

□□ **Re□s□□□s □□ □□SS□□r□□r□ s□**
No Attachment C is included with this Addendum.

Transferring Data Between Rounds of an RFX: A new document titled "Transferring Data Between Rounds of an RFX" has been added to the Documents section of the View RFx tab. Please refer to this document when an addendum has been issued. Note: Whenever an addendum is issued, the RFX item grid will be cleared. You can import the work you have already done by following the steps on this document.

DDC strongly advises vendors to finalize and submit bids 48 hours prior to due date and time. The City is not responsible for technical issues (e.g. internet connection, power outages, technology malfunction, computer errors, etc.) related to bid submissions.

If additional information is required, please contact the Department of Design and Construction, Contract Section via PASSPort (in the Discussions with Buyer section).

Signed for _____
Richard Jones, PE CWI
Executive Director, Executive-Engineering Services

DDC PROJECT #: □□□**S**□**R**□□

□**R**□ □□□□ □□**M**□□**R**□□□□□**S**□**R**□□□□□□ □□ □□□**S**□□□ **S**□□ □**RS**□**S**□□□□□□ □**S**□□□**D**

□□□□□□**M**□□□ □ □□□**DD**□**RS** □□□**S**□□□□**S** □□**D DD**□ **R**□**S**□□□**S**□**S**

None

DDC PROJECT #: **□□□S□R□□**

□R□□□□□ □□M□□R□□□□□S□R□□□□□□ □□□□□S□□□□ S□□ □RS□S□□□□□□ □S□□□D

□□□□□□M□□□□ □ – R□□□S□□□S □□ □□□ D□□□M□□□S

A. VOLUME 3 OF 3:

1) EP7-4: Paragraph 3: “Quantity Overruns,EP-7 Funded Bid Items” the language has been Strike Out/removed

DDC PROJECT #: **S R**

R M R S R S S D

M – R S S SS R RMS

s dde d a es R d e r re e

Please note that numbering of addenda is independent of rounds.

es a re a es

None

e r d a es

None

CITY OF NEW YORK
DEPARTMENT OF DESIGN AND CONSTRUCTION
DIVISION OF INFRASTRUCTURE

ADDENDA CONTROL SHEET

BID SUBMISSION DATE/ TIME: November 27, 2024; between 8:30am and 11:00am
BID OPENING DATE/ TIME: November 27, 2024; 11:30am

PROJECT No. : EC-SER25
TITLE: **R□□□□S□R□□□□□□ □□ □□□S□□□□ S□□ □RS□S□□□□□ □S□□□D**

□DD□□D□ □SS□□D	□□□□□ D□ □	D□□□	□□□R□□□D □□□ S□□□S □□□□	□□□□R□□ □□□□S□□
#1 Revisions to Documents;	0	11/01/2024		
#2 Revisions to PASSPort Form	0	11/18/2024		SM 11/15/24

THE CITY OF NEW YORK
DEPARTMENT OF DESIGN AND CONSTRUCTION
DIVISION OF INFRASTRUCTURE

□□□□□□□□□

□DD□□D□M □□□□ □
FOR FURNISHING ALL LABOR AND MATERIAL NECESSARY AND REQUIRED FOR:

□□□□□□ □□□□□□□□□S□R□□

R□□□□S□R□□□□□□ □ □□ □□S□□□□ S□□ □RS□S□□□□□ □S□□□D

This addendum is issued for the purpose of amending the requirements of the Bid and Contract Documents and is hereby made a part of said Bid and Contract Documents to the same extent as though it were originally included therein.

The bidder is advised that the items listed below apply to the project:

□□ **□dders □□es□□□s a□d Res□□□ses □□ □□es□□□s□**
No Attachment A is included with this Addendum.

□□ **Re□s□□□s □□ D□□□□ e□□s□**
No Attachment B is included with this Addendum.

□□ **Re□s□□□s □□ □□SS□□r□□□r□ s□**
Attachment C is included with this Addendum.

Transferring Data Between Rounds of an RFX: A new document titled "Transferring Data Between Rounds of an RFX" has been added to the Documents section of the View RFx tab. Please refer to this document when an addendum has been issued. Note: Whenever an addendum is issued, the RFX item grid will be cleared. You can import the work you have already done by following the steps on this document.

DDC strongly advises vendors to finalize and submit bids 48 hours prior to due date and time. The City is not responsible for technical issues (e.g. internet connection, power outages, technology malfunction, computer errors, etc.) related to bid submissions.

If additional information is required, please contact the Department of Design and Construction, Contract Section via PASSPort (in the Discussions with Buyer section).

Richard Jones, PE CWI
Executive Director, Executive-Engineering Services

DDC PROJECT #: □□□**S**□**R**□□

□**R**□ □□□□ □□**M**□□**R**□□□□□**S**□**R**□□□□□□ □□ □□□**S**□□□ **S**□□ □**RS**□**S**□□□□□□ □**S**□□□**D**

□□□□□□**M**□□□ □ □□□**DD**□**RS** □□□**S**□□□□**S** □□**D DD**□ **R**□**S**□□□**S**□**S**

None

DDC PROJECT #: □□□**S**□**R**□□

□**R**□ □□□□ □□**M**□□**R**□□□□□**S**□**R**□□□□□□ □ □ □□□**S**□□□ **S**□□ □**RS**□**S**□□□□□ □**S**□□□**D**

□□□□□□**M**□□□ □ **– R**□□□**S**□□□**S** □□ □□□ **D**□□□**M**□□□**S**

None

DDC PROJECT #: **□□□S□R□□**

□R□ □□□□ □□M□□ R□□□□□S□R□□□□□□ □ □ □□□S□□□□ S□□ □RS□S□□□□□ □S□□□D

□□□□□□M□□□ □ – R□□□S□□□S □□ □□SS□□R□ □□RMS

□□□s □dde□d□□ □□□□a□es R□□□d □ □□□□e □r□□□re□ e□□

Please note that numbering of addenda is independent of rounds.

□ □es□□□□a□re □□a□□es□

None

D□□□□ e□□S□□□ □ss□□□ Se□□□□

Added the following document information:
1) OSHA 300 / 300A forms
2) JV Letter of Willingness
3) Apprenticeship Additional Information
4) Iran Divestment Act

Removed the following document information:
1) The SER Requirements Form
2) Bid Schedule

□e□ □r□d □□a□□es□

Added Engineer Estimate in 1) Multiplier Items in Bid Schedule and 2) Fixed Sum Items in Bid Schedule in Item Grid.