Department of Design and Construction

THE CITY OF NEW YORK
DEPARTMENT OF DESIGN AND CONSTRUCTION
DIVISION OF INFRASTRUCTURE

30-30 THOMSON AVENUE
LONG ISLAND CITY, NEW YORK 11101-3045
TELEPHONE (718) 391-1000
WEBSITE www.nyc.gov/buildnyc

VOLUME 1 OF 3

LAW

BID BOOKLET

FOR FURNISHING ALL LABOR AND MATERIALS NECESSARY AND REQUIRED FOR:

PROJECT ID: QED1014

REHABILITATION OF EXISTING TRUNK WATER MAINS IN CRESCENT STREET FROM 34TH AVENUE TO 31ST AVENUE; 31ST AVENUE FROM CRESCENT STREET TO 41ST STREET; AND 41ST STREET FROM 31ST AVENUE TO 25TH AVENUE

INCLUDING DISTRIBUTION WATER MAIN, SEWER AND TRAFFIC SIGNAL WORK

Together With All Work Incidental Thereto
BOROUGH OF QUEENS
CITY OF NEW YORK

FOR THE DEPARTMENT OF ENVIRONMENTAL PROTECTION
PREPARED BY
IN-HOUSE DESIGN

DECEMBER 30, 2015

16-164

PRE-BID QUESTIONS
(PBQs)

Please be advised that PBQs should be submitted to the Agency Contact Person at least five (5) business days (by 5:00 P.M. EST) prior to the bid opening date as indicated in ATTACHMENT 1 – BID INFORMATION, page A-1 and SCHEDULE B, page 13, VOLUME 1 OF 3 of this BID BOOKLET.

NO TEXT THIS PAGE

Notice to Bidders

Compliance with HireNYC and Reporting Requirements

The Hiring and Employment Rider shall apply to contracts valued at $1 million or more for all goods, services and construction except human services contracts that are subject to the Public Assistance Hiring Commitment Rider. The Rider describes the Hire NYC process and obligations, including reporting requirements throughout the life of the contract. The Hire NYC process requires contractors to enroll with the Hire NYC system within thirty days after the registration of the contract subject to this solicitation, to provide information regarding all entry to mid-level job opportunities arising from this contract and located in New York City, and to agree to interview qualified candidates from HireNYC for those opportunities. The Rider also includes reporting requirements unrelated to HireNYC.

(NO TEXT ON THIS PAGE)

SPECIAL NOTICE TO BIDDERS

The New York City Department of Small Business Services (SBS), in conjunction with the New York Business Development Corporation (NYBDC), have established a **NYC Construction Loan** pilot program to provide prime contractors and subcontractors financing for mobilization costs on certain City construction projects.

Under this initiative, loans are available for early stage mobilization needs such as insurance, labor, supplies and equipment. Bidders are strongly encouraged to visit "Growing Your Business" at www.nyc.gov/nycbusiness to learn more about the loan or contact constructionloan@sbs.nyc.gov / (212) 513-6444 to obtain details and to determine preliminary eligibility.

A successful loan applicant will be required to make an assignment of its contract (or subcontract) payments to the lender NYBDC until the loan is repaid. If the loan is to a subcontractor, a prime contractor must honor the terms of such an assignment.

A prime contractor may not discriminate against a subcontractor or potential subcontractor by reason of the subcontractor's participation, or nonparticipation, in the NYC Construction Loan program.

NOTICE TO VENDORS

Please be advised that, pursuant to the authority granted to the City under Labor Law §816-b, the New York City Department of Design and Construction hereby requires that the contractor awarded a contract as a result of this solicitation, and any of its subcontractors with subcontracts worth two million dollars or over, have, prior to entering into such contract or subcontract, apprenticeship agreements appropriate for the type and scope of work to be performed that have been registered with, and approved by, the New York State Commissioner of Labor. In addition, the contractor and its subcontractors will be required to show that such apprenticeship program/s have successfully passed the two year Probation period following the initial registration date of such program/s with the New York State Department of Labor.

The failure to prove, upon request, that these requirements have been met shall result in the contract not being awarded to the contractor or the subcontractor not being approved.

Please be further advised that, pursuant to Labor Law §220, the allowable ratio of apprentices to journeypersons in any craft classification shall not be greater than the ratio permitted to the contractor as to its workforce on any job under the registered apprenticeship program.

(NO TEXT ON THIS PAGE)

CITY OF NEW YORK

DEPARTMENT OF DESIGN AND CONSTRUCTION DIVISION OF INFRASTRUCTURE

BID BOOKLET

FOR FURNISHING ALL LABOR AND MATERIALS NECESSARY AND REQUIRED FOR:

PROJECT ID: QED1014

REHABILITATION OF EXISTING TRUNK WATER MAINS IN CRESCENT STREET FROM 34TH AVENUE TO 31ST AVENUE; 31ST AVENUE FROM CRESCENT STREET TO 41ST STREET; AND 41ST STREET FROM 31ST AVENUE TO 25TH AVENUE

INCLUDING DISTRIBUTION WATER MAIN, SEWER AND TRAFFIC SIGNAL WORK

Together With All Work Incidental Thereto
BOROUGH OF QUEENS

(NO TEXT ON THIS PAGE)

PROJECT ID: QED1014

CITY OF NEW YORK
DEPARTMENT OF DESIGN AND CONSTRUCTION
DIVISION OF INFRASTRUCTURE

BID BOOKLET

TABLE OF CONTENTS

(NO TEXT ON THIS PAGE)

CITY OF NEW YORK
DEPARTMENT OF DESIGN AND CONSTRUCTION
DIVISION OF INFRASTRUCTURE

SPECIAL NOTICE TO BIDDERS

BID SUBMISSION REQUIREMENTS

THE FOLLOWING DOCUMENTS ARE TO BE COMPLETED AND SUBMITTED WITH THE BID:

1. Bid Schedule and Bid Form, including Affirmation
2. Bid Security (if required, see Attachment 1 on Page A-1)
3. Schedule B: M/WBE Utilization Plan (if participation goals have been established)

FAILURE TO SUBMIT ITEMS (1), (2) AND (3)
WILL RESULT IN THE DISQUALIFICATION OF THE BID.

4. Safety Questionnaire
5. Construction Employment Report (if bid is $1,000,000 or more)
6. Contract Certificate (if bid is less than $1,000,000)
7. Confirmation of Vendex Compliance
8. Bidder's Certification of Compliance with Iran Divestment Act
9. Special Experience Requirements (if applicable)
10. Apprenticeship Program Questionnaire (if applicable)
11. Any addenda issued prior to the receipt of bids

FAILURE TO SUBMIT ITEMS (4) THROUGH (11)
MAY RESULT IN THE DISQUALIFICATION OF THE BID.

NOTES:

(1) All of the above referred to blank forms to be completed and submitted with the bid are included in the BID BOOKLET.

(2) If the bidder has any questions or requires additional information, please contact the Department of Design and Construction by phone (718-391- 2601) or by fax (718-391-2615).

(3) VENDEX QUESTIONNAIRES: The Bidder is advised that Vendex Questionnaires and procedures have been changed. Vendex Questionnaires, as well as detailed instructions, may be obtained at www.nyc.gov/vendex. The bidder may also obtain Vendex forms and instructions by contacting the Agency Chief Contracting Officer or the contact person for this contract.

(4) SPECIAL EXPERIENCE REQUIREMENTS: The Bidder is advised that Special Experience Requirements may apply to this contract. Such requirements are set forth on pages 3, 3a, 3b and 4 of this Bid Booklet.

SPECIAL NOTICE TO BIDDERS

SPECIAL EXPERIENCE REQUIREMENTS (Revised 03/2014)

(A) **SPECIAL EXPERIENCE REQUIREMENTS FOR THE BIDDER:** The Special Experience Requirements set forth below apply to the bidder. Compliance with such Special Experience Requirements will be determined solely by the City prior to an award of contract. Failure to comply with the Special Experience Requirements will result in rejection of the bid as non-responsive.

The requirements in this Section (A) apply to this contract where indicated by a blackened box (■).

■ The bidder must, within the last seven (7) consecutive years prior to the bid opening, have successfully completed in a timely fashion at least one (1) project similar in scope and type to the required work. Such prior project may have been performed as a prime contractor, subcontractor or sub-subcontractor.

The Special Experience Requirements next to the blackened box below apply to the bidder. If the bidder intends to perform such work itself, it must demonstrate compliance with the Special Experience Requirements. If the bidder intends to subcontract this work, the proposed subcontractor or sub-subcontractor must demonstrate compliance with the Special Experience Requirements. The contractor, subcontractor or sub-subcontractor (hereinafter referred to as the "entity") that will perform any specific area of work indicated by the blackened box below, may have performed the required prior project(s) as a prime contractor, subcontractor or sub-subcontractor. Once approved, no substitution will be permitted, unless the qualifications of the proposed replacement have been approved in writing in advance by the City.

■ **Trunk Water Main Work:** The entity that will perform the trunk water main work must, within the last seven (7) consecutive years prior to the bid opening, have successfully completed in a timely fashion at least one (1) project similar in scope and type to the required work.

☐ **Best Management Practice Work:** Best Management Practice ("BMP") Work is any item of work in the Bid Schedule that begins with the prefix "BMP". The entity that will perform any BMP Work must, within the last five (5) consecutive years prior to the bid opening, have successfully completed in a timely fashion at least three (3) projects similar in scope and type to the required work.

For professional services in connection with BMP Work, (i.e., monitoring and reporting services), the individual who will perform the required services must, within the last five (5) consecutive years prior to the bid opening, have successfully completed in a timely fashion at least three (3) projects similar in scope and type to the required work. Additional requirements are set forth below.

☐ The individual serving as the Restoration Specialist (Construction Monitor) must be a Registered Landscape Architect licensed by the state of New York, or must have equivalent professional experience.

☐ The individual serving as the Erosion and Sediment Control Licensed/Certified Professional must be a Certified Professional in Erosion and Sediment Control (CPESC), certified by CPESC, Inc.

☐ **Micro-Tunneling/Pipe Jacking Work:** The entity that will perform the micro-tunneling/pipe jacking work must, within the last five (5) consecutive years prior to the bid opening, have successfully completed in a timely fashion at least two (2) projects similar in scope and type to the required work.

☐ **OTHER:**_____

_____

(B) SPECIAL EXPERIENCE REQUIREMENTS FOR SPECIFIC AREAS OF WORK (to be provided after an award of contract):

The requirements in this Section (B) apply to this contract where indicated by a blackened box (■).

The Special Experience Requirements set forth below apply to the contractor, subcontractor or sub-subcontractor that will perform the specific area of work. **Compliance with such Special Experience Requirements will be determined solely by the City after an award of contract.** After an award of contract, when requested by the City, the contractor will be required to submit the qualifications of the contractor, subcontractor or sub-subcontractor that will perform the specific area of work. If the bidder intends to perform such work itself, it must demonstrate compliance with the Special Experience Requirements. If the bidder intends to subcontract this work, the proposed subcontractor or sub-subcontractor must demonstrate compliance with the Special Experience Requirements. Once approved, no substitution will be permitted, unless the qualifications of the proposed replacement have been approved in writing in advance by the City.

Special Experience Requirements apply to the contractor, subcontractor or sub-subcontractor (hereinafter referred to as the "entity") that will perform any specific area of work indicated by a blackened box. The entity may have performed the required prior project(s) as a prime contractor, subcontractor or sub-subcontractor.

■ **Hazmat Work:** Hazmat Work is any item of work in the Bid Schedule that begins with the prefix 8.01. The entity that will perform any Hazmat Work must, within the last three (3) consecutive years prior to the bid opening, have successfully completed in a timely fashion at least five (5) projects similar in scope and type to the required work.

□ **Pile, CFA Pile, and/or Mini-Pile Work:** The entity that will perform the Pile, CFA Pile and/or Mini-Pile Work must, within the last three (3) consecutive years prior to the bid opening, have successfully completed in a timely fashion at least two (2) projects similar in scope and type to the required work.

For professional services in connection with Pile Work, (i.e., engineering and inspection services), the individual who will perform the required services must be a Professional Engineer licensed by the state of New York. Such individual must also comply with the above requirements for prior projects.

■ **Construction Report, Monitoring And Post-Construction Report, and Continuous Real-Time Monitoring For Vibrations And Movements And Post-Construction Report Work:** The entity that will perform the Construction Report, Monitoring For Vibrations And Movements, and Post-Construction Report Work must, within the last three (3) consecutive years prior to the bid opening, have successfully completed in a timely fashion at least two (2) projects similar in scope and type to the required work.

For professional services in connection with Reporting and Monitoring Work, (i.e., engineering and inspection services), the individual who will perform the required services must be a Professional Engineer licensed by the state of New York. Such individual must also comply with the above requirements for prior projects.

■ **Asbestos Abatement Work:** Refer to SPECIFICATIONS FOR ABATEMENT OF TRANSIT AUTHORITY DUCT INSULATION ASBESTOS CONTAINING MATERIALS as provided in Volume 3 of 3, Subsection 79.11.1.3, pages ASB-4 and ASB-5.

■ **Non Destructive Testing:** Refer to SEWER AND WATER MAIN REVISIONS TO SPECIFICATIONS as provided in Volume 3 of 3, Subsection 60.61.5, page SW-12.

(C) **SPECIFICATIONS:** In the event of any conflict, omission or inconsistency between (1) the Specifications and/or Contract Drawings, and (2) the Special Experience Requirements in Section (B) of the Special Notice To Bidders, the special experience listed in the Specifications and/or Contract Drawings shall be controlling. The Special Experience Requirements in Section (B) of this Special Notice To Bidders are only for the convenience of the bidders.

(D) **SUBMISSION REQUIREMENTS:** For each project submitted to demonstrate compliance with the Special Experience Requirements, the bidder must complete and submit the Qualification Form included in the Bid Booklet. The City will only evaluate a project if the following criteria are met: (1) the project is described on the Qualification Form, and (2) all information on the Qualification Form is provided. The City will not evaluate any project which does not comply with the criteria set forth herein, including any project which is referred to only on the resume of an individual.

If Special Experience Requirements are indicated for any specific area of work, the submission requirement set forth above shall apply to the entity that will perform the specific area of work.

(E) **CONDITIONS**: In determining compliance with the Special Experience Requirements for the bidder set forth above, the City may consider prior projects completed by principal(s) or other employees of the bidder while affiliated with another entity, subject to the conditions set forth below.

- Any principal or other employee on whose prior experience the bidder is relying to demonstrate compliance with this special experience requirement must have held the following: (a) a significant management role in the prior entity with which he/she was affiliated, and (b) a significant management role in the entity submitting the bid for a period of six (6) months or more from the inception of the bidding entity.

- The bidder may not rely on the experience of its principals or other employees to demonstrate compliance with any other requirements, including without limitation, financial requirements or requirements for a specified minimum amount of annual gross revenues.

(F) **JOINT VENTURES**: In the event the bidder is a joint venture, at least one firm in the joint venture must meet the above described experience requirements.

Bid Tab

Description	**REHABILITATION OF EXISTING TRUNK WATER MAINS IN CRESCENT STREET- BOROUGH OF QUEENS**		
Bid Date	**6/2/2016**	**FMS ID**	**QED-1014**
Estimated Cost	**$24,635,728.00**	**Client Agency**	**DEP**
Bid Security	**Not less than 2% of Total Bid Price**	**PLA**	**No**
Time Allowed	**730CCD**	**Contract Manager**	**Shermaine Manifold**
Addendum	**5**	**Project Manager**	**A.H.M. Choudhury**
PIN	**8502016WM0005C**	**E-PIN**	**85016B0110**
Selective Bidding	☐Yes ☒No	**Consultant**	**In-House**

Bid Rank	Vendor	Bid Amount	Security Type
1	HALCYON CONSTRUCTION CORP.	$22,190,000.00	Bond
2	TULLY CONSTRUCTION CO. INC.	$24,616,277.15	Bond
3	JR CRUZ CORP	$25,324,423.00	Bond
4	C.A.C. INDUSTRIES, INC.	$27,567,517.50	Bond
5	LAWS CONSTRUCTION CORP.	$28,428,000.00	Bond
6	BEDFORD/CARP CONSTRUCTION INC.	$39,339,339.39	Bond

Recorder: Brenda Barreiro Ext. 1041 **Approver:** Lorraine Holley

Department of Design and Construction

DR. FENIOSKY A. PEÑA-MORA
Commissioner

CHARLETTE HAMAMGIAN
Agency Chief
Contracting Officer

November 09, 2016

CERTIFIED MAIL - RETURN RECEIPT REQUEST
HALCYON CONSTRUCTION CORP.
65 MARBLE AVENUE
PLEASANTVILLE, NY 10570

RE: FMS ID: QED-1014
E-PIN: 85016B0110001
DDC PIN: 8502016WM0005C
REHABILITATION OF EXISTING TRUNK WATER MAINS IN CRESCENT STREET-BOROUGH OF QUEENS
NOTICE OF AWARD

Dear Contractor:

You are hereby awarded the above referenced contract based upon your bid in the amount of $22,190,000.00 submitted at the bid opening on June 02, 2016. Within ten (10) days of your receipt of this notice of award, you are required to take the actions set forth in Paragraphs (1) through (3) below. For your convenience, attached please find a copy of Schedule A of the General Conditions to the Contract, which sets forth the types and amounts of insurance coverage required for this contract.

(1) Execute four copies of the Agreement in the Contracts Unit, 30-30 Thomson Avenue, 1st Floor, Long Island City, New York (IDCNY Building). A Commissioner of Deeds will be available to witness and notarize your signature. The Agreement must be signed by an officer of the corporation or a partner of the firm.

(2) Submit to the Contracts Unit four properly executed performance and payment bonds. If required for this contract, copies of performance and payment bonds are attached.

(3) Submit to the Contracts Unit the following insurance documentation: (a) original certificate of insurance for general liability in the amount required by Schedule A, and (b) original certificates of insurance or other proof of coverage for workers' compensation and disability benefits, as required by New York State Law. The insurance documentation specified in this paragraph is required for registration of the contract with the Comptroller's Office.

Department of Design and Construction

On or before the contract commencement date, you are required to submit all other certificates of insurance and/or policies in the types and amounts required by Schedule A. Such certificates of Insurance and/or policies must be submitted to the Agency Chief Contracting Office, Attention: Risk Manager, Fourth Floor at the above indicated department address.

Your attention is directed to the section of the Information for Bidders entitled "Failure to Execute Contract". As indicated in this section, in the event you fail to execute the contract and furnish the required bonds within the (10) days of your receipt of this notice of award, your bid security will be retained by the City and you will be liable for the difference between your bid price and the price for which the contract is subsequently awarded, less the amount of the bid security retained.

Sincerely,

Michael Shipman
Director of Contracts

30 - 30 Thomson Ave L.I.C., NY 11101 Telephone: (718) 391-2838 Facsimile: (718) 391-1885 www.nyc.gov/buildnyc

Qualification Form

List previous projects completed to meet the special experience requirements for this contract. Please photocopy this form for submission of all required projects.

Name of Contractor: HALCYON CONSTRUCTION CORP. 65 MARBLE AVENUE

Name of Project: PLEASANTVILLE, NEW YORK 10570 MED-606

Location of Project: GRAND STREET, MANHATTAN

Owner or Owner's representative (Architect or Engineer) who is familiar with the work performed:

Name: MR. SHAH JAROMI

Title: NYC DDC DIRECTOR Phone Number: -

Brief description of the Project completed or the Project in progress: INSTALLATION OF TRUNK WATER MAINS & APPURT.

Was the Project performed as a prime, a subcontractor or a sub-subcontractor: SUBCONTRACTOR

Amount of Contract, Subcontract or Sub-subcontract: $55M.

Start Date and Completion Date: 10/2012 - 10/2016

****

Name of Contractor: HALCYON CONSTRUCTION CORP. 65 MARBLE AVENUE

Name of Project: PLEASANTVILLE, NEW YORK 10570 MED-600B

Location of Project: E. 58TH ST., MANHATTAN.

Owner or Owner's representative (Architect or Engineer) who is familiar with the work performed:

Name: MR. SHAH JAROMI

Title: NYCDDC DIRECTOR Phone Number: -

Brief description of the Project completed or the Project in progress: INSTALLATION OF TRUNK WATER MAINS & APPURT.

Was the Project performed as a prime, a subcontractor or a sub-subcontractor: PRIME

Amount of Contract, Subcontract or Sub-subcontract: $19M

Start Date and Completion Date: 10/2013 - 9/2016

BID SCHEDULE

NOTE: (1) The Agency may reject a bid if it contains unbalanced bid prices. An unbalanced bid is considered to be one containing lump sum or unit items which do not reflect reasonable actual costs plus a reasonable proportionate share of the Bidder's anticipated profit, overhead costs, and other indirect costs, anticipated for the performance of the items in question.

(2) The following bid prices on Unit Price Contracts are to be paid for the actual quantities of the item numbers in the completed work or structure, and they cover the cost of all work, labor, material, tools, plant and appliances of every description necessary to complete the entire work, as specified, and the removal of all debris, temporary work and appliances.

(3) PLEASE BE SURE A LEGIBLE BID IS ENTERED, IN INK, FOR EACH ITEM.
Alterations must be initialed in ink by the bidder.

(4) The Extended Amount entered in Column 6 shall be the product of the Estimated Quantity in Column 3 times the Unit Price Bid in Column 5.

(5) Prospective bidders must examine the Bid Schedule carefully and, before bidding, must advise the Commissioner, in writing, if any pages are missing, and must request that such missing pages be furnished them. The pages of this Bid Schedule are numbered consecutively, as follows:
B - 3 [REVISION # 1] Through B - 41 [REVISION # 1]

PLEASE BE SURE A LEGIBLE BID IS ENTERED FOR EACH ITEM.
THE BIDDER SHALL INSERT THE TOTAL BID PRICE IN
THE BID FORM ON PAGE C-4 OF THIS BID BOOKLET.

NEW YORK CITY DEPARTMENT OF DESIGN AND CONSTRUCTION
DIVISION OF INFRASTRUCTURE - BUREAU OF DESIGN

PROJECT ID: QED1014
CONTRACT PIN: 8502016WM0005C

BID SCHEDULE FORM

COL. 1 SEQ. NO	COL. 2 ITEM NUMBER and DESCRIPTION	COL. 3 ENGINEER'S ESTIMATE OF QUANTITTY	COL. 4 UNIT	COL. 5 UNIT PRICE (IN FIGURES) DOLLARS	CTS	COL. 6 EXTENDED AMOUNT (IN FIGURES) DOLLARS	CTS
001	4.02 AB-R ASPHALTIC CONCRETE WEARING COURSE, 1-1/2" THICK	1,965.00	S.Y.	50	-	98,250	-
002	4.02 AF-R ASPHALTIC CONCRETE WEARING COURSE, 2" THICK	2,100.00	S.Y.	50	-	105,000	-
003	4.02 CA BINDER MIXTURE	577.00	TONS	200	-	115,400	-
004	4.04 B CONCRETE BASE FOR PAVEMENT, VARIABLE THICKNESS FOR TRENCH RESTORATION, CLASS B-32	285.00	C.Y.	160	-	45,600	-
005	4.04 H CONCRETE BASE FOR PAVEMENT, VARIABLE THICKNESS FOR TRENCH RESTORATION, (HIGH-EARLY STRENGTH)	710.00	C.Y.	300	-	213,000	-
006	4.08 BA CONCRETE CURB (21" DEEP)	1,240.00	L.F.	55	-	68,200	-

NEW YORK CITY DEPARTMENT OF DESIGN AND CONSTRUCTION
DIVISION OF INFRASTRUCTURE - BUREAU OF DESIGN

PROJECT ID: QED1014
CONTRACT PIN: 8502016WM0005C

BID SCHEDULE FORM

COL. 1 SEQ. NO	COL. 2 ITEM NUMBER and DESCRIPTION	COL. 3 ENGINEER'S ESTIMATE OF QUANTITIY	COL. 4 UNIT	COL. 5 UNIT PRICE (IN FIGURES) DOLLARS	CTS	COL. 6 EXTENDED AMOUNT (IN FIGURES) DOLLARS	CTS
007	4.09 AE STRAIGHT STEEL FACED CONCRETE CURB (21" DEEP)	700.00	L.F.	80	-	56,000	-
008	4.09 BE DEPRESSED STEEL FACED CONCRETE CURB (21" DEEP)	145.00	L.F.	90	-	13,050	-
009	4.09 CE CORNER STEEL FACED CONCRETE CURB (21" DEEP)	125.00	L.F.	127	-	15,875	-
010	4.13 AAS 4" CONCRETE SIDEWALK (UNPIGMENTED)	5,360.00	S.F.	8	-	42,880	-
011	4.13 ABS 4" CONCRETE SIDEWALK (PIGMENTED)	2,450.00	S.F.	9	-	22,050	-
012	4.13 BAS 7" CONCRETE SIDEWALK (UNPIGMENTED)	900.00	S.F.	11	-	9,900	-

NEW YORK CITY DEPARTMENT OF DESIGN AND CONSTRUCTION
DIVISION OF INFRASTRUCTURE - BUREAU OF DESIGN

PROJECT ID: QED1014
CONTRACT PIN: 8502016WM0005C

BID SCHEDULE FORM

COL. 1 SEQ. NO	COL. 2 ITEM NUMBER and DESCRIPTION	COL. 3 ENGINEER'S ESTIMATE OF QUANTITIY	COL. 4 UNIT	COL. 5 UNIT PRICE (IN FIGURES) DOLLARS	CTS	COL. 6 EXTENDED AMOUNT (IN FIGURES) DOLLARS	CTS
013	4.13 BBS 7" CONCRETE SIDEWALK (PIGMENTED)	700.00	S.F.	13	-	9,100	-
014	4.13 DE EMBEDDED PREFORMED DETECTABLE WARNING UNITS	200.00	S.F.	23	-	4,600	-
015	4.13 DSA SURFACE APPLIED DETECTABLE WARNING UNITS	130.00	S.F.	29	-	3,770	-
016	4.15 TOPSOIL	40.00	C.Y.	90	-	3,600	-
017	4.16 AA TREES REMOVED (4" TO UNDER 12" CALIPER)	11.00	EACH	495	-	5,445	-
018	4.16 AB TREES REMOVED (12" TO UNDER 18" CALIPER)	4.00	EACH	995	-	3,980	-

NEW YORK CITY DEPARTMENT OF DESIGN AND CONSTRUCTION
DIVISION OF INFRASTRUCTURE - BUREAU OF DESIGN

PROJECT ID: QED1014
CONTRACT PIN: 8502016WM0005C

BID SCHEDULE FORM

COL. 1 SEQ. NO	COL. 2 ITEM NUMBER and DESCRIPTION	COL. 3 ENGINEER'S ESTIMATE OF QUANTITIY	COL. 4 UNIT	COL. 5 UNIT PRICE (IN FIGURES) DOLLARS	CTS	COL. 6 EXTENDED AMOUNT (IN FIGURES) DOLLARS	CTS
019	4.16 AC TREES REMOVED (18" TO UNDER 24" CALIPER)	2.00	EACH	1,400	-	2,800	-
020	4.16 AD TREES REMOVED (24" CALIPER AND OVER)	1.00	EACH	2,500	-	2,500	-
021	4.16 BA505 TREES PLANTED, 2-1/2" TO 3" CALIPER, ALL TYPES, IN 5' X 5' TREE PITS	50.00	EACH	875	-	43,750	-
022	4.18 A MAINTENANCE TREE PRUNING (UNDER 12" CAL.)	8.00	EACH	300	-	2,400	-
023	4.18 B MAINTENANCE TREE PRUNING (12" TO UNDER 18" CAL.)	1.00	EACH	400	-	400	-
024	4.18 C MAINTENANCE TREE PRUNING (18" TO UNDER 24" CAL.)	2.00	EACH	250	-	500	-

NEW YORK CITY DEPARTMENT OF DESIGN AND CONSTRUCTION
DIVISION OF INFRASTRUCTURE - BUREAU OF DESIGN

PROJECT ID: QED1014
CONTRACT PIN: 8502016WM0005C

BID SCHEDULE FORM

COL. 1 SEQ. NO	COL. 2 ITEM NUMBER and DESCRIPTION	COL. 3 ENGINEER'S ESTIMATE OF QUANTITY	COL. 4 UNIT	COL. 5 UNIT PRICE (IN FIGURES) DOLLARS	CTS	COL. 6 EXTENDED AMOUNT (IN FIGURES) DOLLARS	CTS
025	4.18 D MAINTENANCE TREE PRUNING (24" CAL. AND OVER)	2.00	EACH	1,000	-	2,000	-
026	4.21 TREE CONSULTANT	500.00	P/HR	69	-	34,500	-
027	50.31CC12 12" E.S.V.P. COMBINED SEWER, ON CONCRETE CRADLE	450.00	L.F.	800	-	360,000	-
028	50.31CC15 15" E.S.V.P. COMBINED SEWER, ON CONCRETE CRADLE	200.00	L.F.	800	-	160,000	-
029	50.72C0300EB0400 RECONSTRUCTION OF EXISTING 3'-0"W X 4'-0"H EGG-SHAPED BRICK COMBINED SEWER USING SHOTCRETE METHOD	160.00	L.F.	500	-	80,000	-
030	51.21S0A1000E STANDARD MANHOLE TYPE A-1 ON EXISTING SEWER	3.00	EACH	25,000	-	75,000	-

NEW YORK CITY DEPARTMENT OF DESIGN AND CONSTRUCTION
DIVISION OF INFRASTRUCTURE - BUREAU OF DESIGN

PROJECT ID: QED1014
CONTRACT PIN: 8502016WM0005C

BID SCHEDULE FORM

COL. 1 SEQ. NO	COL. 2 ITEM NUMBER and DESCRIPTION	COL. 3 ENGINEER'S ESTIMATE OF QUANTITIY	COL. 4 UNIT	COL. 5 UNIT PRICE (IN FIGURES) DOLLARS	CTS	COL. 6 EXTENDED AMOUNT (IN FIGURES) DOLLARS	CTS
031	51.21S0A1000V STANDARD MANHOLE TYPE A-1	3.00	EACH	15,000	-	45,000	-
032	51.21S0A2000E STANDARD MANHOLE TYPE A-2 ON EXISTING SEWER	1.00	EACH	25,000	-	25,000	-
033	51.21S0A2000V STANDARD MANHOLE TYPE A-2	3.00	EACH	15,000	-	45,000	-
034	51.22RS RECONSTRUCTION OF EXISTING MANHOLE ON EXISTING SHOTCRETED SEWER	2.00	EACH	2,000	-	4,000	-
035	51.23RF REPLACEMENT OF EXISTING MANHOLE FRAME AND COVER	5.00	EACH	860	-	4,300	-
036	51.41S001 STANDARD CATCH BASIN, TYPE 1	13.00	EACH	15,000	-	195,000	-

NEW YORK CITY DEPARTMENT OF DESIGN AND CONSTRUCTION
DIVISION OF INFRASTRUCTURE - BUREAU OF DESIGN

PROJECT ID: QED1014
CONTRACT PIN: 8502016WM0005C

BID SCHEDULE FORM

COL. 1 SEQ. NO	COL. 2 ITEM NUMBER and DESCRIPTION	COL. 3 ENGINEER'S ESTIMATE OF QUANTITIY	COL. 4 UNIT	COL. 5 UNIT PRICE (IN FIGURES) DOLLARS	CTS	COL. 6 EXTENDED AMOUNT (IN FIGURES) DOLLARS	CTS
037	51.41S003 STANDARD CATCH BASIN, TYPE 3	3.00	EACH	16,000	-	48,000	-
038	51.42S1SO INCREMENTAL COST OF STANDARD CATCH BASIN TYPE 3 WITH CURB PIECE IN LIEU OF STANDARD CATCH BASIN TYPE 1	3.00	EACH	5,000	-	15,000	-
039	52.11D12 12" DUCTILE IRON PIPE BASIN CONNECTION	400.00	L.F.	500	-	200,000	-
040	52.31V06C12 6" E.S.V.P. SPUR FOR HOUSE CONNECTION ON 12" E.S.V.P. COMBINED SEWER	40.00	EACH	1	-	40	-
041	52.31V06C15 6" E.S.V.P. SPUR FOR HOUSE CONNECTION ON 15" E.S.V.P. COMBINED SEWER	5.00	EACH	1	-	5	-
042	52.31V08C12 8" E.S.V.P. SPUR FOR HOUSE CONNECTION ON 12" E.S.V.P. COMBINED SEWER	40.00	EACH	1	-	40	-

NEW YORK CITY DEPARTMENT OF DESIGN AND CONSTRUCTION
DIVISION OF INFRASTRUCTURE - BUREAU OF DESIGN

PROJECT ID: QED1014
CONTRACT PIN: 8502016WM0005C

BID SCHEDULE FORM

COL. 1 SEQ. NO	COL. 2 ITEM NUMBER and DESCRIPTION	COL. 3 ENGINEER'S ESTIMATE OF QUANTITIY	COL. 4 UNIT	COL. 5 UNIT PRICE (IN FIGURES) DOLLARS	CTS	COL. 6 EXTENDED AMOUNT (IN FIGURES) DOLLARS	CTS
043	52.31V08C15 8" E.S.V.P. SPUR FOR HOUSE CONNECTION ON 15" E.S.V.P. COMBINED SEWER	5.00	EACH	1	-	5	-
044	52.41D06R 6" D.I.P. HOUSE CONNECTION DRAIN ON CONCRETE CRADLE (RECONNECTION)	75.00	L.F.	1	-	75	-
045	52.41D08R 8" D.I.P. HOUSE CONNECTION DRAIN ON CONCRETE CRADLE (RECONNECTION)	125.00	L.F.	1	-	125	-
046	52.41V06R 6" E.S.V.P. HOUSE CONNECTION DRAIN ON CONCRETE CRADLE (RECONNECTION)	125.00	L.F.	1	-	125	-
047	52.41V08R 8" E.S.V.P. HOUSE CONNECTION DRAIN ON CONCRETE CRADLE (RECONNECTION)	125.00	L.F.	1	-	125	-
048	53.11DR TELEVISION INSPECTION AND DIGITAL AUDIO-VISUAL RECORDING OF SEWERS	1,300.00	L.F.	1	-	1,300	-

NEW YORK CITY DEPARTMENT OF DESIGN AND CONSTRUCTION
DIVISION OF INFRASTRUCTURE - BUREAU OF DESIGN

PROJECT ID: QED1014
CONTRACT PIN: 8502016WM0005C

BID SCHEDULE FORM

COL. 1 SEQ. NO	COL. 2 ITEM NUMBER and DESCRIPTION	COL. 3 ENGINEER'S ESTIMATE OF QUANTITIY	COL. 4 UNIT	COL. 5 UNIT PRICE (IN FIGURES) DOLLARS	CTS	COL. 6 EXTENDED AMOUNT (IN FIGURES) DOLLARS	CTS
049	54.11SC SEWER CLEANING	160.00	L.F.	250	-	40,000	-
050	54.21PC PORTLAND CEMENT (TYPE V) - INJECTION GROUTING	100.00	BAGS	300	-	30,000	-
051	54.31SR SHOTCRETE FOR REPAIR WORK	500.00	C.F.	15	-	7,500	-
052	6.02 AAN UNCLASSIFIED EXCAVATION	801.00	C.Y.	200	-	160,200	-
053	6.02 XSCW INCREMENTAL COST FOR USING SPECIAL CARE WORK METHODS NEAR (FROM 3 FEET TO 50 FEET) TRANSIT FACILITIES	130.00	C.Y.	20	-	2,600	-
054	6.25 RS TEMPORARY SIGNS	3,330.00	S.F.	—	10	333	-

NEW YORK CITY DEPARTMENT OF DESIGN AND CONSTRUCTION
DIVISION OF INFRASTRUCTURE - BUREAU OF DESIGN

PROJECT ID: QED1014
CONTRACT PIN: 8502016WM0005C

BID SCHEDULE FORM

COL. 1 SEQ. NO	COL. 2 ITEM NUMBER and DESCRIPTION	COL. 3 ENGINEER'S ESTIMATE OF QUANTITTY	COL. 4 UNIT	COL. 5 UNIT PRICE (IN FIGURES) DOLLARS	CTS	COL. 6 EXTENDED AMOUNT (IN FIGURES) DOLLARS	CTS
055	6.26 TIMBER CURB	7,610.00	L.F.	—	10	761	—
056	6.28 AA LIGHTED TIMBER BARRICADES	2,000.00	L.F.	—	10	200	-
057	6.34 ACT TEMPORARY CHAIN LINK FENCE, 6'-0" HIGH	9,035.00	L.F.	—	10	903	50
058	6.34 ACTP TEMPORARY CHAIN LINK FENCE, 6'-0" HIGH (WITH TOP AND BOTTOM RAILS AND POSTS MOUNTED ON STEEL PLATES)	9,035.00	L.F.	—	10	903	50
059	6.40 D ENGINEER'S FIELD OFFICE (TYPE D)	30.00	MONTH	8000	—	240,000	—
060	6.44 THERMOPLASTIC REFLECTORIZED PAVEMENT MARKINGS (4" WIDE)	20,830.00	L.F.	1	25	26,037	50

NEW YORK CITY DEPARTMENT OF DESIGN AND CONSTRUCTION
DIVISION OF INFRASTRUCTURE - BUREAU OF DESIGN

PROJECT ID: QED1014
CONTRACT PIN: 8502016WM0005C

BID SCHEDULE FORM

COL. 1 SEQ. NO	COL. 2 ITEM NUMBER and DESCRIPTION	COL. 3 ENGINEER'S ESTIMATE OF QUANTITY	COL. 4 UNIT	COL. 5 UNIT PRICE (IN FIGURES) DOLLARS	CTS	COL. 6 EXTENDED AMOUNT (IN FIGURES) DOLLARS	CTS
061	6.49 TEMPORARY PAVEMENT MARKINGS (4" WIDE)	17,955.00	L.F.	—	50	8977	50
062	6.50 CLEANING OF DRAINAGE STRUCTURES	1.00	EACH	400	—	400	—
063	6.52 CG CROSSING GUARD	7,080.00	P/HR	30	—	212,400	—
064	6.53 REMOVE EXISTING LANE MARKINGS (4" WIDE)	17,955.00	L.F.	—	50	8,977	50
065	6.59 P TEMPORARY CONCRETE BARRIER	10,385.00	L.F.	—	20	2,077	—
066	6.87 PLASTIC BARRELS	2,080.00	EACH	—	05	104	—

NEW YORK CITY DEPARTMENT OF DESIGN AND CONSTRUCTION
DIVISION OF INFRASTRUCTURE - BUREAU OF DESIGN

PROJECT ID: QED1014
CONTRACT PIN: 8502016WM0005C

BID SCHEDULE FORM

COL. 1 SEQ. NO	COL. 2 ITEM NUMBER and DESCRIPTION	COL. 3 ENGINEER'S ESTIMATE OF QUANTITTY	COL. 4 UNIT	COL. 5 UNIT PRICE (IN FIGURES) DOLLARS	CTS	COL. 6 EXTENDED AMOUNT (IN FIGURES) DOLLARS	CTS
067	60.11R520 FURNISHING AND DELIVERING 20-INCH DUCTILE IRON RESTRAINED JOINT PIPE (CLASS 55)	100.00	L.F.	175	-	17,500	-
068	60.11R606 FURNISHING AND DELIVERING 6-INCH DUCTILE IRON RESTRAINED JOINT PIPE (CLASS 56)	480.00	L.F.	38	-	18,240	-
069	60.11R608 FURNISHING AND DELIVERING 8-INCH DUCTILE IRON RESTRAINED JOINT PIPE (CLASS 56)	120.00	L.F.	60	-	7,200	-
070	60.11R612 FURNISHING AND DELIVERING 12-INCH DUCTILE IRON RESTRAINED JOINT PIPE (CLASS 56)	420.00	L.F.	90	-	37,800	-
071	60.12D06 LAYING 6-INCH DUCTILE IRON PIPE AND FITTINGS	550.00	L.F.	100	-	55,000	-
072	60.12D08 LAYING 8-INCH DUCTILE IRON PIPE AND FITTINGS	135.00	L.F.	100	-	13,500	-

NEW YORK CITY DEPARTMENT OF DESIGN AND CONSTRUCTION
DIVISION OF INFRASTRUCTURE - BUREAU OF DESIGN

PROJECT ID: QED1014
CONTRACT PIN: 8502016WM0005C

BID SCHEDULE FORM

COL. 1 SEQ. NO	COL. 2 ITEM NUMBER and DESCRIPTION	COL. 3 ENGINEER'S ESTIMATE OF QUANTITIY	COL. 4 UNIT	COL. 5 UNIT PRICE (IN FIGURES) DOLLARS	CTS	COL. 6 EXTENDED AMOUNT (IN FIGURES) DOLLARS	CTS
073	60.12D12 LAYING 12-INCH DUCTILE IRON PIPE AND FITTINGS	495.00	L.F.	100	-	49,500	-
074	60.12D20 LAYING 20-INCH DUCTILE IRON PIPE AND FITTINGS	130.00	L.F.	175	-	22,750	-
075	60.13M0A24 FURNISHING AND DELIVERING DUCTILE IRON MECHANICAL JOINT 24 -INCH DIAMETER AND SMALLER FITTINGS, INCLUDING WEDGE TYPE RETAINER GLANDS	11.00	TONS	6000	-	66,000	-
076	60.21SP4T48 FURNISHING, DELIVERING AND LAYING 48-INCH STRAIGHT STEEL PIPE, 1/2-INCH WALL THICKNESS	100.00	L.F.	900	-	90,000	-
077	60.21SP4T52 FURNISHING, DELIVERING AND LAYING 52-INCH STRAIGHT STEEL PIPE, 1/2-INCH WALL THICKNESS	1,250.00	L.F.	560	-	700,000	-
078	60.21SP5T60 FURNISHING, DELIVERING AND LAYING 60-INCH STRAIGHT STEEL PIPE, 5/8-INCH WALL THICKNESS	50.00	L.F.	1,200	-	60,000	-

NEW YORK CITY DEPARTMENT OF DESIGN AND CONSTRUCTION
DIVISION OF INFRASTRUCTURE - BUREAU OF DESIGN

PROJECT ID: QED1014
CONTRACT PIN: 8502016WM0005C

BID SCHEDULE FORM

COL. 1 SEQ. NO	COL. 2 ITEM NUMBER and DESCRIPTION	COL. 3 ENGINEER'S ESTIMATE OF QUANTITIY	COL. 4 UNIT	COL. 5 UNIT PRICE (IN FIGURES) DOLLARS	CTS	COL. 6 EXTENDED AMOUNT (IN FIGURES) DOLLARS	CTS
079	60.21SP6T72 FURNISHING, DELIVERING AND LAYING 72-INCH STRAIGHT STEEL PIPE, 3/4-INCH WALL THICKNESS	200.00	L.F.	2000	-	400,000	-
080	60.22BR4T52 FURNISHING, DELIVERING AND LAYING 52-INCH STEEL BENDS AND REDUCERS, 1/2-INCH WALL THICKNESS	75.00	L.F.	5,500	-	412,500	-
081	60.22BR5T60 FURNISHING, DELIVERING AND LAYING 60-INCH STEEL BENDS AND REDUCERS, 5/8-INCH WALL THICKNESS	7.00	L.F.	7,500	-	52,500	-
082	60.22BR6T72 FURNISHING, DELIVERING AND LAYING 72-INCH STEEL BENDS AND REDUCERS, 3/4-INCH WALL THICKNESS	60.00	L.F.	5,000	-	300,000	-
083	60.23ST48T52 FURNISHING, DELIVERING AND INSTALLING 52-INCH X 48-INCH STEEL TEE	1.00	EACH	250,000	-	250,000	-
084	60.25PSO FURNISHING, DELIVERING AND INSTALLING PLATE STEEL OUTLETS ON STEEL PIPE, ACCESS MANHOLE OUTLETS WITH COVERS, AND NUTS AND BOLTS COMPLETE	34,200.00	LBS.	10	-	342,000	-

BID SCHEDULE FORM

COL. 1 SEQ. NO	COL. 2 ITEM NUMBER and DESCRIPTION	COL. 3 ENGINEER'S ESTIMATE OF QUANTITY	COL. 4 UNIT	COL. 5 UNIT PRICE (IN FIGURES) DOLLARS	CTS	COL. 6 EXTENDED AMOUNT (IN FIGURES) DOLLARS	CTS
085	**60.27RSC48** FURNISHING, DELIVERING AND INSTALLING 48-INCH DIAMETER BOLTED, SPLIT SLEEVE-TYPE RESTRAINED COUPLING	4.00	EACH	75,000	-	300,000	-
086	**60.29CP** FURNISHING, INSTALLING AND TESTING CORROSION CONTROL AND/OR CATHODIC PROTECTION SYSTEM	1.00	L.S.	300,000	-	300,000	-
087	**60.61SLM52S** FURNISHING, DELIVERING AND INSTALLING 52-INCH STRAIGHT STEEL WATER MAIN PIPE BY SLIP-LINING METHOD	7,100.00	L.F.	845	-	5,999,500	-
088	**61.11DFM06** FURNISHING AND DELIVERING 6-INCH FLANGED-MECHANICAL JOINT DUCTILE IRON GATE VALVE COMPLETE WITH WEDGE TYPE RETAINER GLAND	18.00	EACH	3,000	-	54,000	-
089	**61.11DFM12** FURNISHING AND DELIVERING 12-INCH FLANGED-MECHANICAL JOINT DUCTILE IRON GATE VALVE COMPLETE WITH WEDGE TYPE RETAINER GLAND	1.00	EACH	5,000	-	5,000	-

NEW YORK CITY DEPARTMENT OF DESIGN AND CONSTRUCTION
DIVISION OF INFRASTRUCTURE - BUREAU OF DESIGN

PROJECT ID: QED1014
CONTRACT PIN: 8502016WM0005C

BID SCHEDULE FORM

COL. 1 SEQ. NO	COL. 2 ITEM NUMBER and DESCRIPTION	COL. 3 ENGINEER'S ESTIMATE OF QUANTITIY	COL. 4 UNIT	COL. 5 UNIT PRICE (IN FIGURES) DOLLARS	CTS	COL. 6 EXTENDED AMOUNT (IN FIGURES) DOLLARS	CTS
090	61.11DFM20 FURNISHING AND DELIVERING 20-INCH FLANGED-MECHANICAL JOINT DUCTILE IRON GATE VALVE COMPLETE WITH WEDGE TYPE RETAINER GLAND	1.00	EACH	25,000	-	25,000	-
091	61.11DMM12 FURNISHING AND DELIVERING 12-INCH MECHANICAL JOINT DUCTILE IRON GATE VALVE COMPLETE WITH WEDGE TYPE RETAINER GLANDS	2.00	EACH	3,000	-	6,000	-
092	61.11DMM20 FURNISHING AND DELIVERING 20-INCH MECHANICAL JOINT DUCTILE IRON GATE VALVE COMPLETE WITH WEDGE TYPE RETAINER GLANDS	1.00	EACH	25,000	-	25,000	-
093	61.11TWC04 FURNISHING AND DELIVERING 4-INCH WET CONNECTION TAPPING VALVE COMPLETE WITH WEDGE TYPE RETAINER GLANDS	5.00	EACH	1	-	5	-
094	61.11TWC06 FURNISHING AND DELIVERING 6-INCH WET CONNECTION TAPPING VALVE COMPLETE WITH WEDGE TYPE RETAINER GLANDS	5.00	EACH	1	-	5	-

NEW YORK CITY DEPARTMENT OF DESIGN AND CONSTRUCTION
DIVISION OF INFRASTRUCTURE - BUREAU OF DESIGN

PROJECT ID: QED1014
CONTRACT PIN: 8502016WM0005C

BID SCHEDULE FORM

COL. 1 SEQ. NO	COL. 2 ITEM NUMBER and DESCRIPTION	COL. 3 ENGINEER'S ESTIMATE OF QUANTITIY	COL. 4 UNIT	COL. 5 UNIT PRICE (IN FIGURES) DOLLARS	CTS	COL. 6 EXTENDED AMOUNT (IN FIGURES) DOLLARS	CTS
095	61.11TWC08 FURNISHING AND DELIVERING 8-INCH WET CONNECTION TAPPING VALVE COMPLETE WITH WEDGE TYPE RETAINER GLANDS	3.00	EACH	1	-	3	-
096	61.12DFM06 SETTING 6-INCH FLANGED-MECHANICAL JOINT DUCTILE IRON GATE VALVE COMPLETE WITH WEDGE TYPE RETAINER GLAND	18.00	EACH	1,000	-	18,000	-
097	61.12DFM12 SETTING 12-INCH FLANGED-MECHANICAL JOINT DUCTILE IRON GATE VALVE COMPLETE WITH WEDGE TYPE RETAINER GLAND	1.00	EACH	1,500	-	1,500	-
098	61.12DFM20 SETTING 20-INCH FLANGED-MECHANICAL JOINT DUCTILE IRON GATE VALVE COMPLETE WITH WEDGE TYPE RETAINER GLAND	1.00	EACH	2,500	-	2,500	-
099	61.12DMM12 SETTING 12-INCH MECHANICAL JOINT DUCTILE IRON GATE VALVE COMPLETE WITH WEDGE TYPE RETAINER GLANDS	2.00	EACH	500	-	1,000	-
100	61.12DMM20 SETTING 20-INCH MECHANICAL JOINT DUCTILE IRON GATE VALVE COMPLETE WITH WEDGE TYPE RETAINER GLANDS	1.00	EACH	2,000	-	2,000	-

NEW YORK CITY DEPARTMENT OF DESIGN AND CONSTRUCTION
DIVISION OF INFRASTRUCTURE - BUREAU OF DESIGN

PROJECT ID: QED1014
CONTRACT PIN: 8502016WM0005C

BID SCHEDULE FORM

COL. 1 SEQ. NO	COL. 2 ITEM NUMBER and DESCRIPTION	COL. 3 ENGINEER'S ESTIMATE OF QUANTITIY	COL. 4 UNIT	COL. 5 UNIT PRICE (IN FIGURES) DOLLARS	CTS	COL. 6 EXTENDED AMOUNT (IN FIGURES) DOLLARS	CTS
101	61.12TWC04 SETTING 4-INCH WET CONNECTION TAPPING VALVE COMPLETE WITH WEDGE TYPE RETAINER GLANDS	5.00	EACH	1	-	5	-
102	61.12TWC06 SETTING 6-INCH WET CONNECTION TAPPING VALVE COMPLETE WITH WEDGE TYPE RETAINER GLANDS	5.00	EACH	1	-	5	-
103	61.12TWC08 SETTING 8-INCH WET CONNECTION TAPPING VALVE COMPLETE WITH WEDGE TYPE RETAINER GLANDS	3.00	EACH	1	-	3	-
104	61.21BVB48 FURNISHING, DELIVERING AND INSTALLING 48-INCH BUTTERFLY VALVE WITH BY-PASS ARRANGEMENT AND OUTLET, COMPLETE	6.00	EACH	275,000	-	1,650,000	-
105	62.11SD FURNISHING AND DELIVERING HYDRANTS	9.00	EACH	7,500	-	67,500	-
106	62.12SG SETTING HYDRANTS COMPLETE WITH WEDGE TYPE RETAINER GLANDS	9.00	EACH	7,500	-	67,500	-

NEW YORK CITY DEPARTMENT OF DESIGN AND CONSTRUCTION
DIVISION OF INFRASTRUCTURE - BUREAU OF DESIGN

PROJECT ID: QED1014
CONTRACT PIN: 8502016WM0005C

BID SCHEDULE FORM

COL. 1 SEQ. NO	COL. 2 ITEM NUMBER and DESCRIPTION	COL. 3 ENGINEER'S ESTIMATE OF QUANTITY	COL. 4 UNIT	COL. 5 UNIT PRICE (IN FIGURES) DOLLARS	CTS	COL. 6 EXTENDED AMOUNT (IN FIGURES) DOLLARS	CTS
107	62.13RH REMOVING HYDRANTS	7.00	EACH	250	-	1,750	-
108	62.14FS FURNISHING, DELIVERING AND INSTALLING HYDRANT FENDERS	27.00	EACH	200	-	5,400	-
109	63.11MH FURNISHING, DELIVERING AND INSTALLING 36-INCH CAST IRON MANHOLE HEADS AND COVERS	12.00	TONS	3,000	-	36,000	-
110	63.11MS FURNISHING, DELIVERING AND INSTALLING MANHOLE STEPS TYPE PS2-PF	300.00	EACH	30	-	9,000	-
111	63.11VC FURNISHING AND DELIVERING VARIOUS CASTINGS	41.00	TONS	700	-	28,700	-
112	64.11EL WITHDRAWING AND REPLACING HOUSE SERVICES USING 1-1/2-INCH OR LARGER SCREW TAPS	12.00	EACH	675	-	8,100	-

NEW YORK CITY DEPARTMENT OF DESIGN AND CONSTRUCTION
DIVISION OF INFRASTRUCTURE - BUREAU OF DESIGN

PROJECT ID: QED1014
CONTRACT PIN: 8502016WM0005C

BID SCHEDULE FORM

COL. 1 SEQ. NO	COL. 2 ITEM NUMBER and DESCRIPTION	COL. 3 ENGINEER'S ESTIMATE OF QUANTITIY	COL. 4 UNIT	COL. 5 UNIT PRICE (IN FIGURES) DOLLARS	CTS	COL. 6 EXTENDED AMOUNT (IN FIGURES) DOLLARS	CTS
113	64.11ST WITHDRAWING AND REPLACING HOUSE SERVICES USING SMALLER THAN 1-1/2-INCH SCREW TAPS	12.00	EACH	300	-	3,600	-
114	64.12COEG CUTTING AND OFFSETTING HOUSE SERVICE WATER CONNECTIONS (EQUAL TO OR GREATER THAN 3-INCH DIAMETER)	12.00	L.F.	100	-	1,200	-
115	64.12COLT CUTTING AND OFFSETTING HOUSE SERVICE WATER CONNECTIONS (LESS THAN 3-INCH DIAMETER)	12.00	L.F.	100	-	1,200	-
116	64.12ESEG EXTENDING HOUSE SERVICE WATER CONNECTIONS (EQUAL TO OR GREATER THAN 3-INCH DIAMETER)	12.00	L.F.	100	-	1,200	-
117	64.12ESLT EXTENDING HOUSE SERVICE WATER CONNECTIONS (LESS THAN 3-INCH DIAMETER)	12.00	L.F.	100	-	1,200	-
118	64.13WC08 FURNISHING, DELIVERING AND INSTALLING WET CONNECTION SLEEVE ON 8-INCH WATER MAIN PIPE WITH VARIOUS OUTLETS	3.00	EACH	1	-	3	-

NEW YORK CITY DEPARTMENT OF DESIGN AND CONSTRUCTION
DIVISION OF INFRASTRUCTURE - BUREAU OF DESIGN

PROJECT ID: QED1014
CONTRACT PIN: 8502016WM0005C

BID SCHEDULE FORM

COL. 1 SEQ. NO	COL. 2 ITEM NUMBER and DESCRIPTION	COL. 3 ENGINEER'S ESTIMATE OF QUANTITIY	COL. 4 UNIT	COL. 5 UNIT PRICE (IN FIGURES) DOLLARS	CTS	COL. 6 EXTENDED AMOUNT (IN FIGURES) DOLLARS	CTS
119	**64.13WC12** FURNISHING, DELIVERING AND INSTALLING WET CONNECTION SLEEVE ON 12-INCH WATER MAIN PIPE WITH VARIOUS OUTLETS	5.00	EACH	1	–	5	–
120	**64.13WC20** FURNISHING, DELIVERING AND INSTALLING WET CONNECTION SLEEVE ON 20-INCH WATER MAIN PIPE WITH VARIOUS OUTLETS	5.00	EACH	1	–	5	–
121	**65.11BR** FURNISHING, DELIVERING AND INSTALLING BANDS, RODS, WASHERS, ETC., COMPLETE, FOR RESTRAINING JOINTS	225.00	LBS.	10	–	2,250	–
122	**65.21PS** FURNISHING AND PLACING POLYETHYLENE SLEEVE **Unit price bid shall not be less than: $ 0.50**	770.00	L.F.	–	50	385	–
123	**65.31FF** FURNISHING, DELIVERING AND PLACING FILTER FABRIC **Unit price bid shall not be less than: $ 0.10**	35,050.00	S.F.	–	10	3,505	–
124	**65.41PS06** FURNISHING, DELIVERING AND INSTALLING 6-INCH PIPE-TO-WALL PENETRATION SEAL, INCLUDING STEEL SLEEVE AND ANCHOR/WATER STOP PLATE	18.00	EACH	2,000	–	36,000	–

NEW YORK CITY DEPARTMENT OF DESIGN AND CONSTRUCTION
DIVISION OF INFRASTRUCTURE - BUREAU OF DESIGN

PROJECT ID: QED1014
CONTRACT PIN: 8502016WM0005C

BID SCHEDULE FORM

COL. 1 SEQ. NO	COL. 2 ITEM NUMBER and DESCRIPTION	COL. 3 ENGINEER'S ESTIMATE OF QUANTITY	COL. 4 UNIT	COL. 5 UNIT PRICE (IN FIGURES) DOLLARS	CTS	COL. 6 EXTENDED AMOUNT (IN FIGURES) DOLLARS	CTS
125	**65.41PS12** FURNISHING, DELIVERING AND INSTALLING 12-INCH PIPE-TO-WALL PENETRATION SEAL, INCLUDING STEEL SLEEVE AND ANCHOR/WATER STOP PLATE	2.00	EACH	2,500	-	5,000	-
126	**65.41PS20** FURNISHING, DELIVERING AND INSTALLING 20-INCH PIPE-TO-WALL PENETRATION SEAL, INCLUDING STEEL SLEEVE AND ANCHOR/WATER STOP PLATE	2.00	EACH	3,500	-	7,000	-
127	**65.41PS48** FURNISHING, DELIVERING AND INSTALLING 48-INCH PIPE-TO-WALL PENETRATION SEAL, INCLUDING STEEL SLEEVE AND ANCHOR/WATER STOP PLATE	9.00	EACH	1,000	-	9,000	-
128	**65.41PS60** FURNISHING, DELIVERING AND INSTALLING 60-INCH PIPE-TO-WALL PENETRATION SEAL, INCLUDING STEEL SLEEVE AND ANCHOR/WATER STOP PLATE	2.00	EACH	10,000	-	20,000	-
129	**65.41PS72** FURNISHING, DELIVERING AND INSTALLING 72-INCH PIPE-TO-WALL PENETRATION SEAL, INCLUDING STEEL SLEEVE AND ANCHOR/WATER STOP PLATE	4.00	EACH	14,000	-	56,000	-

NEW YORK CITY DEPARTMENT OF DESIGN AND CONSTRUCTION
DIVISION OF INFRASTRUCTURE - BUREAU OF DESIGN

PROJECT ID: QED1014
CONTRACT PIN: 8502016WM0005C

BID SCHEDULE FORM

COL. 1 SEQ. NO	COL. 2 ITEM NUMBER and DESCRIPTION	COL. 3 ENGINEER'S ESTIMATE OF QUANTITIY	COL. 4 UNIT	COL. 5 UNIT PRICE (IN FIGURES) DOLLARS	CTS	COL. 6 EXTENDED AMOUNT (IN FIGURES) DOLLARS	CTS
130	65.51PC FURNISHING AND PLACING CAST-IN-PLACE CONCRETE CLASS 40 AND PRECAST CONCRETE CLASS 50	400.00	C.Y.	750	-	300,000	-
131	65.61SS FURNISHING, DELIVERING AND PLACING STRUCTURAL, REINFORCING AND MISCELLANEOUS STEEL	40,000.00	LBS.	1	-	40,000	-
132	65.71SG FURNISHING, DELIVERING AND PLACING SCREENED GRAVEL OR SCREENED BROKEN STONE BEDDING	325.00	C.Y.	110	-	35,750	-
133	67.11AA48 INCREMENTAL COST FOR ASBESTOS ABATEMENT WORK PERFORMED ON EXISTING 48-INCH DIAMETER STEEL PIPE WATER MAIN TO BE REMOVED, COMPLETE	100.00	L.F.	200	-	20,000	-
134	67.11AA60 INCREMENTAL COST FOR ASBESTOS ABATEMENT WORK PERFORMED ON EXISTING 60-INCH DIAMETER STEEL PIPE WATER MAIN TO BE REMOVED, COMPLETE	130.00	L.F.	400	-	52,000	-

NEW YORK CITY DEPARTMENT OF DESIGN AND CONSTRUCTION
DIVISION OF INFRASTRUCTURE - BUREAU OF DESIGN

PROJECT ID: QED1014
CONTRACT PIN: 8502016WM0005C

BID SCHEDULE FORM

COL. 1 SEQ. NO	COL. 2 ITEM NUMBER and DESCRIPTION	COL. 3 ENGINEER'S ESTIMATE OF QUANTITY	COL. 4 UNIT	COL. 5 UNIT PRICE (IN FIGURES) DOLLARS	CTS	COL. 6 EXTENDED AMOUNT (IN FIGURES) DOLLARS	CTS
135	67.11AA72 INCREMENTAL COST FOR ASBESTOS ABATEMENT WORK PERFORMED ON EXISTING 72-INCH DIAMETER STEEL PIPE WATER MAIN TO BE REMOVED, COMPLETE	40.00	L.F.	500	–	20,000	–
136	7.13 B MAINTENANCE OF SITE Unit price bid shall not be less than: $ 8,000.00	24.00	MONTH	240,000	– ~~0~~ 2	5,760,000	–
137	7.36 PEDESTRIAN STEEL BARRICADES	8,845.00	L.F.	—	10	884	50
138	7.88 AA RODENT INFESTATION SURVEY AND MONITORING Unit price bid shall not be less than: $ 40,000.00	1.00	L.S.	40,000	–	40,000	–
139	7.88 AB RODENT BAIT STATIONS Unit price bid shall not be less than: $ 60.00	410.00	EACH	60	–	24,600	–
140	7.88 AC BAITING OF RODENT BAIT STATIONS Unit price bid shall not be less than: $ 9.50	410.00	EACH	9	50	3,895	–

NEW YORK CITY DEPARTMENT OF DESIGN AND CONSTRUCTION
DIVISION OF INFRASTRUCTURE - BUREAU OF DESIGN

PROJECT ID: QED1014
CONTRACT PIN: 8502016WM0005C

BID SCHEDULE FORM

COL. 1 SEQ. NO	COL. 2 ITEM NUMBER and DESCRIPTION	COL. 3 ENGINEER'S ESTIMATE OF QUANTITIY	COL. 4 UNIT	COL. 5 UNIT PRICE (IN FIGURES) DOLLARS	CTS	COL. 6 EXTENDED AMOUNT (IN FIGURES) DOLLARS	CTS
141	7.88 AD WATERBUG BAIT APPLICATIONS Unit price bid shall not be less than: $ 65.00	710.00	BLOCK	65	-	46,150	-
142	70.21DK DECKING	3,800.00	S.Y.	1	-	3,800	-
143	70.31FN FENCING Unit price bid shall not be less than: $ 2.00	6,850.00	L.F.	2	-	13,700	-
144	70.51EO EXCAVATION OF BOULDERS IN OPEN CUT Unit price bid shall not be less than: $ 75.00	60.00	C.Y.	75	-	4,500	-
145	70.61RE ROCK EXCAVATION	510.00	C.Y.	1	-	510	-
146	70.71SB STONE BALLAST Unit price bid shall not be less than: $ 15.00	10.00	C.Y.	75	-	750	-

NEW YORK CITY DEPARTMENT OF DESIGN AND CONSTRUCTION
DIVISION OF INFRASTRUCTURE - BUREAU OF DESIGN

PROJECT ID: QED1014
CONTRACT PIN: 8502016WM0005C

BID SCHEDULE FORM

COL. 1 SEQ. NO	COL. 2 ITEM NUMBER and DESCRIPTION	COL. 3 ENGINEER'S ESTIMATE OF QUANTITIY	COL. 4 UNIT	COL. 5 UNIT PRICE (IN FIGURES) DOLLARS	CTS	COL. 6 EXTENDED AMOUNT (IN FIGURES) DOLLARS	CTS
147	70.81CB CLEAN BACKFILL Unit price bid shall not be less than: $ 15.00	1,150.00	C.Y.	15	-	17,250	-
148	70.91SW12 FURNISHING AND PLACING SHEETING AND BRACING IN TRENCH FOR WATER MAIN PIPE 12-INCH IN DIAMETER AND LESS	4,000.00	S.F.	—	05	200	-
149	70.91SW20 FURNISHING AND PLACING SHEETING AND BRACING IN TRENCH FOR WATER MAIN PIPE 20-INCH IN DIAMETER	1,450.00	S.F.	—	05	72	50
150	73.11AB ADDITIONAL BRICK MASONRY Unit price bid shall not be less than: $ 62.50	15.00	C.Y.	62	50	937	50
151	73.21AC ADDITIONAL CONCRETE Unit price bid shall not be less than: $ 62.50	42.00	C.Y.	130	-	5,460	-
152	73.31AE0 ADDITIONAL EARTH EXCAVATION INCLUDING TEST PITS (ALL DEPTHS) Unit price bid shall not be less than: $ 20.00	130.00	C.Y.	20	-	2,600	-

BID SCHEDULE FORM

COL. 1 SEQ. NO	COL. 2 ITEM NUMBER and DESCRIPTION	COL. 3 ENGINEER'S ESTIMATE OF QUANTITTY	COL. 4 UNIT	COL. 5 UNIT PRICE (IN FIGURES) DOLLARS	CTS	COL. 6 EXTENDED AMOUNT (IN FIGURES) DOLLARS	CTS
153	73.41AG ADDITIONAL SELECT GRANULAR BACKFILL Unit price bid shall not be less than: $ 15.00	126.00	C.Y.	15	–	1,890	–
154	73.51AS ADDITIONAL STEEL REINFORCING BARS Unit price bid shall not be less than: $ 1.00	100.00	LBS.	2	–	200	–
155	76.11CR CONSTRUCTION REPORT	1.00	L.S.	10,000	–	10,000	–
156	76.21MR MONITORING AND POST-CONSTRUCTION REPORT	1.00	L.S.	4,000	–	4,000	–
157	79.11AATA ALLOWANCE FOR ASBESTOS ABATEMENT WORK PERFORMED ON EXISTING TRANSIT AUTHORITY DUCT INSULATION (REMOVAL OF ACM, REPLACEMENT WITH NON-ACM, AND SUPPORT AND PROTECTION OF EXISTING TRANSIT AUTHORITY DUCT, COMPLETE) PRICE BID SHALL BE FOR THE FIXED SUM OF $ 4,500.00	1.00	F.S.	4,500	00	$4,500	00

NEW YORK CITY DEPARTMENT OF DESIGN AND CONSTRUCTION
DIVISION OF INFRASTRUCTURE - BUREAU OF DESIGN

PROJECT ID: QED1014
CONTRACT PIN: 8502016WM0005C

BID SCHEDULE FORM

COL. 1 SEQ. NO	COL. 2 ITEM NUMBER and DESCRIPTION	COL. 3 ENGINEER'S ESTIMATE OF QUANTITTY	COL. 4 UNIT	COL. 5 UNIT PRICE (IN FIGURES) DOLLARS	CTS	COL. 6 EXTENDED AMOUNT (IN FIGURES) DOLLARS	CTS
158	8.01 C1 HANDLING, TRANSPORTING AND DISPOSAL OF NON-HAZARDOUS CONTAMINATED SOIL	6,000.00	TONS	4	-	24,000	-
159	8.01 C2 SAMPLING AND TESTING OF CONTAMINATED/POTENTIALLY HAZARDOUS SOIL FOR DISPOSAL PURPOSES	15.00	SETS	500	-	7,500	-
160	8.01 H HANDLING, TRANSPORTING AND DISPOSAL OF HAZARDOUS SOIL	100.00	TONS	100	-	10,000	-
161	8.01 S HEALTH AND SAFETY	1.00	L.S.	15,000	-	15,000	-
162	8.01 W1 REMOVAL, TREATMENT, AND DISCHARGE/DISPOSAL OF CONTAMINATED WATER	7.00	DAY	500	-	3,500	-
163	8.01 W2 SAMPLING AND TESTING OF CONTAMINATED WATER	2.00	SETS	950	-	1,900	-

NEW YORK CITY DEPARTMENT OF DESIGN AND CONSTRUCTION
DIVISION OF INFRASTRUCTURE - BUREAU OF DESIGN

PROJECT ID: QED1014
CONTRACT PIN: 8502016WM0005C

BID SCHEDULE FORM

COL. 1 SEQ. NO	COL. 2 ITEM NUMBER and DESCRIPTION	COL. 3 ENGINEER'S ESTIMATE OF QUANTITIY	COL. 4 UNIT	COL. 5 UNIT PRICE (IN FIGURES) DOLLARS	CTS	COL. 6 EXTENDED AMOUNT (IN FIGURES) DOLLARS	CTS
164	8.08 VARIABLE MESSAGE BOARD	4.00	EACH	4,000	-	16,000	-
165	9.04 HW ALLOWANCE FOR ANTI-FREEZE ADDITIVE IN CONCRETE PRICE BID SHALL BE FOR THE FIXED SUM OF $ 7,000.00	1.00	F.S.	7,000	00	$7,000	00
166	9.99 FLASHING ARROW BOARD	7.00	EACH	2,500	-	17,500	-
167	T-1.20 REMOVE TYPE "M" SERIES FOUNDATION	3.00	EACH	350	-	1,050	-
168	T-1.3 INSTALL TYPE "M2-5S" FOUNDATION	3.00	EACH	2,415	-	7,245	-

NEW YORK CITY DEPARTMENT OF DESIGN AND CONSTRUCTION
DIVISION OF INFRASTRUCTURE - BUREAU OF DESIGN

PROJECT ID: QED1014
CONTRACT PIN: 8502016WM0005C

BID SCHEDULE FORM

COL. 1 SEQ. NO	COL. 2 ITEM NUMBER and DESCRIPTION	COL. 3 ENGINEER'S ESTIMATE OF QUANTITIY	COL. 4 UNIT	COL. 5 UNIT PRICE (IN FIGURES) DOLLARS	CTS	COL. 6 EXTENDED AMOUNT (IN FIGURES) DOLLARS	CTS
169	T-2.24 REMOVE TYPE "M" SERIES POST	3.00	EACH	1,761	–	5,283	–
170	T-2.28 REMOVE MAST ARM FROM ANY POST	1.00	EACH	810	–	810	–
171	T-2.32 INSTALL STREET LIGHT LUMINAIRE SUPPORT ARM ON "M-2" POST	1.00	EACH	600	–	600	–
172	T-2.4 INSTALL TYPE "M-2" POST	3.00	EACH	2,113	–	6,339	–
173	T-20220 c) FURNISH 1-1/4" ANCHOR BOLT ASSEMBLIES FOR M-2 (EACH) (4 REQUIRED PER POST)	12.00	EACH	65	–	780	–
174	T-3.1 INSTALL "ONE-WAY" SIGNAL UNIT ON MAST ARM OR TOP OF TRAFFIC POST	9.00	EACH	356	–	3,204	–

NEW YORK CITY DEPARTMENT OF DESIGN AND CONSTRUCTION
DIVISION OF INFRASTRUCTURE - BUREAU OF DESIGN

PROJECT ID: QED1014
CONTRACT PIN: 8502016WM0005C

BID SCHEDULE FORM

COL. 1 SEQ. NO	COL. 2 ITEM NUMBER and DESCRIPTION	COL. 3 ENGINEER'S ESTIMATE OF QUANTITIY	COL. 4 UNIT	COL. 5 UNIT PRICE (IN FIGURES) DOLLARS	CTS	COL. 6 EXTENDED AMOUNT (IN FIGURES) DOLLARS	CTS
175	T-3.12 FURNISH AND INSTALL LOUVERS ON SIGNAL UNIT	1.00	EACH	211	-	211	-
176	T-3.18 REMOVE SIGNAL HEAD FROM ANY TYPE POST	3.00	EACH	352	-	1,056	-
177	T-3.21 REMOVE PEDESTRIAN SIGNAL OR SIGN UNIT OR OTHER ILLUMINATED SIGNS FROM ANY POST	6.00	EACH	352	-	2,112	-
178	T-3.6 INSTALL PEDESTRIAN SIGNAL ON ANY TYPE POST	6.00	EACH	475	-	2,850	-
179	T-30013L FURNISH ADJUSTABLE 3 SECTION 1-WAY, DIE CAST ALUMINUM TRAFFIC SIGNALS 8" - W/LED LENS	9.00	EACH	525	-	4,725	-
180	T-31210 h) "HUB" ASSEMBLY *ASSEMBLY IS EQUAL TO ONE PAIR	3.00	EACH	54	-	162	-

NEW YORK CITY DEPARTMENT OF DESIGN AND CONSTRUCTION
DIVISION OF INFRASTRUCTURE - BUREAU OF DESIGN

PROJECT ID: QED1014
CONTRACT PIN: 8502016WM0005C

BID SCHEDULE FORM

COL. 1 SEQ. NO	COL. 2 ITEM NUMBER and DESCRIPTION	COL. 3 ENGINEER'S ESTIMATE OF QUANTITIY	COL. 4 UNIT	COL. 5 UNIT PRICE (IN FIGURES) DOLLARS	CTS	COL. 6 EXTENDED AMOUNT (IN FIGURES) DOLLARS	CTS
181	T-31225 c) "3MS"	3.00	EACH	396	-	1,188	-
182	T-31351 g) "VB-2P" ASSEMBLY *ASSEMBLY IS EQUAL TO ONE PAIR	3.00	EACH	311	-	933	-
183	T-33000L FURNISH POLYCARBONATE INCANDESCENT PED SIGNAL W/LED LENS	4.00	EACH	428	-	1,712	-
184	T-33001-L FURNISH POLYCARBONATE PEDESTRIAN SIGNAL (16 X 16) W/LED COUNT LENS (SPECIFICATION A-L)	2.00	EACH	565	-	1,130	-
185	T-4.22 INSTALL ANY TYPE OF ADVANCED SOLID STATE TRAFFIC SIGNAL CONTROLLER AND CABINET ON METAL POLE	1.00	EACH	3,013	-	3,013	-
186	T-4.8 REMOVE ONE CONTROL BOX AND CONTROLLER FROM ANY POST OR SUPPORT	1.00	EACH	1,409	-	1,409	-

NEW YORK CITY DEPARTMENT OF DESIGN AND CONSTRUCTION
DIVISION OF INFRASTRUCTURE - BUREAU OF DESIGN

PROJECT ID: QED1014
CONTRACT PIN: 8502016WM0005C

BID SCHEDULE FORM

COL. 1 SEQ. NO	COL. 2 ITEM NUMBER and DESCRIPTION	COL. 3 ENGINEER'S ESTIMATE OF QUANTITIY	COL. 4 UNIT	COL. 5 UNIT PRICE (IN FIGURES) DOLLARS	CTS	COL. 6 EXTENDED AMOUNT (IN FIGURES) DOLLARS	CTS
187	T-5.1 FURNISH AND INSTALL 2" RIGID UNDERGROUND CONDUIT IN UNPAVED ROADWAY	50.00	L.F.	91	-	4,550	-
188	T-5.2 FURNISH AND INSTALL 2" RIGID UNDERGROUND CONDUIT IN PAVED ROADWAY	200.00	L.F.	102	-	20,400	-
189	T-5.32 RESTORING PERMANENT ROADWAY (INCLUDING SAWCUT)	200.00	L.F.	36	50	7,300	-
190	T-5.7 FURNISH AND INSTALL ADDITIONAL 2" RIGID UNDERGROUND CONDUIT	20.00	L.F.	66	-	1,320	-
191	T-6.1 INSTALL CABLE (INCLUDES OVERHEAD)	1,000.00	L.F.	7	40	7,400	-
192	T-6.10 REMOVE CABLE (INCLUDES OVERHEAD)	1,400.00	L.F.	8	40	11,760	-

NEW YORK CITY DEPARTMENT OF DESIGN AND CONSTRUCTION
DIVISION OF INFRASTRUCTURE - BUREAU OF DESIGN

PROJECT ID: QED1014
CONTRACT PIN: 8502016WM0005C

BID SCHEDULE FORM

COL. 1 SEQ. NO	COL. 2 ITEM NUMBER and DESCRIPTION	COL. 3 ENGINEER'S ESTIMATE OF QUANTITIY	COL. 4 UNIT	COL. 5 UNIT PRICE (IN FIGURES) DOLLARS	CTS	COL. 6 EXTENDED AMOUNT (IN FIGURES) DOLLARS	CTS
193	T-6.2 INSTALL MULTIPLE CABLE (INCLUDES OVERHEAD)	1,400.00	L.F.	17	-	23,800	-
194	T-60000B FURNISH 2 c # 10B (BREAKDOWN = 2#10 WITH 3RD WIRE FOR GROUNDING).	1,500.00	L.F.	2	60	3,900	-
195	T-60040 c) 7 CONDUCTOR, 14 A.W.G.	800.00	L.F.	2	-	1,600	-
196	T-60190 e) 13 CONDUCTOR, 14 A.W.G.	1,800.00	L.F.	3	40	6,120	-
197	T-7.14 INSTALL PEDESTRIAN PUSHBUTTON AND PUSHBUTTON SIGN ON ANY POST	1.00	EACH	396	-	396	-
198	T-7.45 REMOVE PEDESTRIAN PUSHBUTTON AND PUSHBUTTON SIGN	1.00	EACH	253	-	253	-

NEW YORK CITY DEPARTMENT OF DESIGN AND CONSTRUCTION
DIVISION OF INFRASTRUCTURE - BUREAU OF DESIGN

PROJECT ID: QED1014
CONTRACT PIN: 8502016WM0005C

BID SCHEDULE FORM

COL. 1 SEQ. NO	COL. 2 ITEM NUMBER and DESCRIPTION	COL. 3 ENGINEER'S ESTIMATE OF QUANTITIY	COL. 4 UNIT	COL. 5 UNIT PRICE (IN FIGURES) DOLLARS	CTS	COL. 6 EXTENDED AMOUNT (IN FIGURES) DOLLARS	CTS
205	UTL-6.01.8 GAS SERVICES CROSSING TRENCHES AND/OR EXCAVATIONS (S6.01) Unit price bid shall not be less than: $ 465.00	5.00	EACH	465	-	2,325	-
206	UTL-6.02 EXTRA EXCAVATION FOR THE INSTALLATION OF CATCH BASIN SEWER DRAIN PIPES WITH GAS INTERFERENCES (S6.02) Unit price bid shall not be less than: $ 715.00	4.00	EACH	715	-	2,860	-
207	UTL-6.03 REMOVAL OF ABANDONED GAS FACILITIES. ALL SIZES. (S6.03) Unit price bid shall not be less than: $ 15.00	370.00	L.F.	15	-	5,550	-
208	UTL-6.03.1A REMOVAL OF ABANDONED GAS FACILITIES WITH POSSIBLE COAL TAR WRAP. ALL SIZES. (FOR CON EDISON WORK ONLY) (S6.03) Unit price bid shall not be less than: $ 25.00	50.00	L.F.	25	-	1,250	-
209	UTL-6.04 ADJUST HARDWARE TO GRADE USING SPACER RINGS/ADAPTORS. (STREET REPAVING.) (S6.04) Unit price bid shall not be less than: $ 35.00	5.00	EACH	35	-	175	-
210	UTL-6.05 ADJUST HARDWARE TO GRADE BY RESETTING. (ROAD RECONSTRUCTION.) (S6.05) Unit price bid shall not be less than: $ 65.00	5.00	EACH	65	-	325	-

NEW YORK CITY DEPARTMENT OF DESIGN AND CONSTRUCTION
DIVISION OF INFRASTRUCTURE - BUREAU OF DESIGN

PROJECT ID: QED1014
CONTRACT PIN: 8502016WM0005C

BID SCHEDULE FORM

COL. 1 SEQ. NO	COL. 2 ITEM NUMBER and DESCRIPTION	COL. 3 ENGINEER'S ESTIMATE OF QUANTITIY	COL. 4 UNIT	COL. 5 UNIT PRICE (IN FIGURES) DOLLARS	CTS	COL. 6 EXTENDED AMOUNT (IN FIGURES) DOLLARS	CTS
211	UTL-6.06 SPECIAL CARE EXCAVATION AND BACKFILLING (S6.06) Unit price bid shall not be less than: $ 180.00	100.00	C.Y.	180	–	18,000	–
212	UTL-6.07 TEST PITS FOR GAS FACILITIES (S6.07) Unit price bid shall not be less than: $ 100.00	40.00	C.Y.	100	–	4,000	–
213	UTL-GCS-2WS GAS INTERFERENCES AND ACCOMMODATIONS PRICE BID SHALL BE FOR THE FIXED SUM OF $ 50,000.00	1.00	F.S.	50,000	00	$50,000	00

SUB-TOTAL: $ 21,344,969

214	6.39 A MOBILIZATION BID PRICE OF MOBILIZATION SHALL NOT EXCEED 4% OF THE ABOVE SUB-TOTAL PRICE.	1.00	L.S.	845,031	–	845,031	–

NEW YORK CITY DEPARTMENT OF DESIGN AND CONSTRUCTION
DIVISION OF INFRASTRUCTURE - BUREAU OF DESIGN

PROJECT ID: QED1014
CONTRACT PIN: 8502016WM0005C

BID SCHEDULE FORM

COL. 1 SEQ. NO	COL. 2 ITEM NUMBER and DESCRIPTION	COL. 3 ENGINEER'S ESTIMATE OF QUANTITIY	COL. 4 UNIT	COL. 5 UNIT PRICE (IN FIGURES) DOLLARS	: CTS	COL. 6 EXTENDED AMOUNT (IN FIGURES) DOLLARS	: CTS

TOTAL BID PRICE: $ 22,190,000 —

PLEASE BE SURE A LEGIBLE BID IS ENTERED FOR EACH ITEM.
THE BIDDER SHALL INSERT THE TOTAL BID PRICE IN
THE BID FORM ON PAGE C-4 OF THIS BID BOOKLET.

BID FORM
THE CITY OF NEW YORK
DEPARTMENT OF DESIGN AND CONSTRUCTION
DIVISION OF INFRASTRUCTURE

BID FOR FURNISHING ALL LABOR AND MATERIAL NECESSARY AND REQUIRED FOR:

PROJECT ID: QED1014

REHABILITATION OF EXISTING TRUNK WATER MAINS IN CRESCENT STREET FROM 34TH AVENUE TO 31ST AVENUE; 31ST AVENUE FROM CRESCENT STREET TO 41ST STREET; AND 41ST STREET FROM 31ST AVENUE TO 25TH AVENUE

INCLUDING DISTRIBUTION WATER MAIN, SEWER AND TRAFFIC SIGNAL WORK

Together With All Work Incidental Thereto
BOROUGH OF QUEENS

Name of Bidder: HALCYON CONST. CORP.

Date of Bid Opening: JUNE 2, 2016

Bidder is: (Check one, whichever applies) Individual ( ) Partnership ( ) Corporation (X)

Place of Business of Bidder: 65 MARBLE AVE., PLEASANTVILLE NY

Bidder's Telephone Number: 914-741-1112 Fax Number: 914-741-2014

Bidder's E-Mail Address: SLEOPOLDO63@GMAIL.COM

Residence of Bidder (If Individual): _____

If Bidder is a Partnership, fill in the following blanks:

Names of Partners	Residence of Partners

If Bidder is a Corporation, fill in the following blanks:

Organized under the laws of the State of NY

Name and Home Address of President: CHARLES CASARELLA.
POUND RIDGE, NY

Name and Home Address of Secretary: CHARLES CASARELLA
POUND RIDGE, NY

Name and Home Address of Treasurer: JOSEPH ZUZZOLO
BRIAR CLIFF, NY

6. Compliance Report

The bidder, as an individual, or as a member, partner, director, or officer of the bidder, if the same be a firm, partnership, or corporation, (1) represents that his attention has been specifically drawn to Executive Order No. 50, dated, April 25, 1980, on Equal Employment Compliance of the contract, and (2) warrants that he will comply with the provisions of Executive Order No. 50. The Employment Report must be submitted as part of the bid.

The bidder, as an individual, or as a member, partner, director, or officer of the bidder, if the same be a firm, partnership, or corporation, executes this document expressly warranting that he will comply with: (1) the provision of the contract on providing records, Chapter 8.

7. By submission of this bid, the bidder certifies that it now has and will continue to have the financial capability to fully perform the work required for this contract. Any award of this contract will be made in reliance upon such certification. Upon request therefor, the bidder will submit written verification of such financial capability in a form that is acceptable to the department.

8. In accordance with Section 165 of the State Finance Law, the bidder agrees that tropical hardwoods, as defined in Section 165 of the State Finance Law, shall not be utilized in the performance of this Contract, except as the same are permitted by the foregoing provision of law.

9. The bidder has visited and examined the site of the work and has carefully examined the Contract in the form approved by the Corporation Counsel, and will execute the Contract and perform all its items, covenants and conditions, and will provide, furnish and deliver all the work, materials, supplies, tools and appliances for all labor and materials necessary or required for the hereinafter named work, all in strict conformity with the Contract, for the prices set forth in the Bid Schedule:

10. M/WBE UTILIZATION PLAN: By signing its bid, the bidder agrees to the Vendor Certification and Required Affirmations set forth below, unless a full waiver of the Participation Goals is granted. The Vendor Certification and Required Affirmations will be deemed to satisfy the requirement to complete Section V of Part II of Schedule B: M/WBE Utilization Plan.

Section V: Vendor Certification and Required Affirmations:

I hereby:

1) acknowledge my understanding of the M/WBE participation requirements as set forth in this Contract and the pertinent provisions of Section 6-129 of the Administrative Code of the City of New York and the rules promulgated thereunder;
2) affirm that the information supplied in support of the M/WBE Utilization Plan is true and correct;
3) agree, if awarded this Contract, to comply with the M/WBE participation requirements of this Contract, the pertinent provisions of Section 6-129, and the rules promulgated thereunder, all of which shall be deemed to be material terms of this Contract;
4) agree and affirm that it is a material term of this Contract that the Vendor will award the total dollar value of the M/WBE Participation Goals to certified MBEs and/or WBEs, unless a full waiver is obtained or such goals are modified by the Agency; and
5) agree and affirm, if awarded this Contract, to make all reasonable, good faith efforts to meet the M/WBE Participation Goals, or If a partial waiver is obtained or such goals are modified by the Agency, to meet the modified Participation Goals by soliciting and obtaining the participation of certified MBE and/or WBE firms.

BID FORM

PROJECT ID: QED1014

TOTAL BID PRICE: In the space provided below, the Bidder shall indicate its Total Bid Price in figures. Such Total Bid Price is set forth on the final page of the Bid Schedule.

TOTAL BID PRICE:
(a/k/a BID PROPOSAL)

$ 22,190,000 —

BB 6/2/16

BIDDER'S SIGNATURE AND AFFIDAVIT

Bidder: HALCYON CONSTRUCTION CORP.
65 MARBLE AVENUE
PLEASANTVILLE, NEW YORK 10570

By: _____
(Signature of Partner or corporate officer)

_____
Secretary of Corporate Bidder

Attest:
(Corporate Seal)

Affidavit on the following page should be subscribed
and sworn to before a Notary Public

MARIA DIOGUARDI
Notary Public, State of New York
No. 01-DI6234278
Qualified in Westchester County
Commission Expires Jan 18, 2019

AFFIRMATION

PROJECT ID: QED1014

The undersigned bidder affirms and declares that said bidder is not in arrears to the City of New York upon debt, contract or taxes and is not a defaulter, as surety or otherwise, upon obligation to the City of New York, and has not been declared not responsible, or disqualified, by any agency of the City of New York, nor is there any proceeding pending relating to the responsibility or qualification of the bidder to receive public contracts except:

"NONE"

(If none, the bidder shall insert the word "None" in the space provided above.)

Full Name of Bidder: HALCYON CONSTRUCTION CORP.

Address: 65 MARBLE AVENUE

City PLEASANTVILLE, NEW YORK 10570 State _____ Zip Code _____

CHECK ONE BOX AND INCLUDE APPROPRIATE NUMBER:

/__/ A - Individual or Sole Proprietorship*
SOCIAL SECURITY NUMBER

- - - - - - - - - - - -

/__/ B - Partnership, Joint Venture or other unincorporated organization
EMPLOYER IDENTIFICATION NUMBER

- - - - - - - - - - - -

/X/ C- Corporation
EMPLOYER IDENTIFICATION NUMBER
13-2995431

By: _____
Signature

Title: PRESIDENT

If a corporation, place seal here

This affirmation must be signed by an officer or duly authorized representative.

*Under the Federal Privacy Act the furnishing of Social Security Numbers by bidders on City contracts is voluntary. Failure to provide a Social Security Number will not result in a bidder's disqualification. Social Security Numbers will be used to identify bidders, proposers or vendors to ensure their compliance with laws, to assist the City in enforcement of laws, as well as to provide the City a means of identifying of businesses which seek City contracts.

A. **PROJECT REFERENCES – SIMILAR CONTRACTS COMPLETED BY THE BIDDER**

List all contracts substantially completed within the last 4 years similar to the contract being awarded, up to a maximum of 10, in descending order of date of substantial completion.

Project & Location	Contract Type	Contract Amount ($000)	Date Completed	Owner Reference & Tel. No.	Architect/Engineer Reference & Tel. No. if different from owner
MED600	WATER	$25,000	10/2012	NYCDDC	TOM FOLEY
GE-349	WATER	$10,000	9/2012	NYCDEP	TASOS GEORGEELIS

APPRENTICESHIP PROGRAM QUESTIONNAIRE

PROJECT ID: ~~SER200245~~ QED-1014

The bidder must submit a completed and signed Apprenticeship Program Questionnaire.

1. Does the bidder have an Apprenticeship Program appropriate for the type and scope of work to be performed? [Note: Participation may be by either direct sponsorship or through collective bargaining agreement(s).]

   ✓ YES _____ NO

2. Has the bidder's Apprenticeship Program been registered with, and approved by, the New York State Commissioner of Labor?

   ✓ YES _____ NO

3. Has the bidder's Apprenticeship Program had three years of successful experience in providing career opportunities?

   ✓ YES _____ NO

If the answer to Question #3 is "Yes", the bidder shall, in the space below, provide information regarding the experience the Apprenticeship Program has had in providing career opportunities. The bidder may attach additional pages if necessary.

PROGRAM HAS BEEN SUCCESSFUL IN THAT APPENTICESHIP UNION LABOR HAS GRADUATED TO JOURNEYMAN STATUS.

Bidder: HALCYON CONSTRUCTION CORP.
65 MARBLE AVENUE
PLEASANTVILLE, NEW YORK 10570

By: _____ Title: J.P.
(Signature of Partner or Corporate Officer)

Date: 5/25/2016

VENDEX COMPLIANCE

(A) **Vendex Fees:** Pursuant to Procurement Policy Board Rule 2-08(f)(2), the contractor will be charged a fee for the administration of the VENDEX system, including the Vendor Name Check process, if a Vendor Name Check review is required to be conducted by the Department of Investigation. The contractor shall also be required to pay the applicable required fees for any of its subcontractors for which Vendor Name Check reviews are required. The fee(s) will be deducted from payments made to the contractor under the contract. For contracts with an estimated value of less than or equal to $1,000,000, the fee will be $175 per Vendor Name Check review. For contracts with an estimated value of greater than $1,000,000, the fee will be $350 per Vendor Name Check review.

(B) **Confirmation of Vendex Compliance:** The Bidder shall submit this Confirmation of Vendex Compliance to the Department of Design and Construction, Contracts Section, 30-30 Thomson Avenue – First Floor, Long Island City, NY 11101.

Bid Information: The Bidder shall complete the bid information set forth below.

Name of Bidder: HALCYON CONSTRUCTION CORP.
Bidder's Address: 65 MARBLE AVENUE
Bidder's Telephone Number: 914-741-1112 ~~PLEASANTVILLE, NEW~~ YORK 10570
Bidder's Fax Number: 914-741-2014
Date of Bid Opening: 6/2/2016
Project ID: QED-1014

Vendex Compliance: To demonstrate compliance with Vendex requirements, the Bidder shall complete either Section (1) or Section (2) below, whichever applies.

(1) **Submission of Vendex Questionnaires to MOCS:** By signing in the space provided below, the Bidder certifies that as of the date specified below, the Bidder has submitted Vendex Questionnaires to the Mayor's Office of Contract Services, Attn: VENDEX, 253 Broadway, 9th Floor, New York, New York 10007.

Date of Submission: 12/23/2015

By: _____
(Signature of Partner or corporate officer)

Print Name: CHARLES CASARELLA

(2) **Submission of Certification of No Change to DDC:** By signing in the space provided below, the Bidder certifies that it has read the instructions in a "Vendor's Guide to Vendex" and that such instructions do not require the Bidder to submit Vendex Questionnaires. The Bidder has completed **TWO ORIGINALS** of the Certification of No Change set forth on the next page of this Bid Booklet.

By: _____
(Signature of Partner or corporate officer)

Print Name: CHARLES CASARELLA

IRAN DIVESTMENT ACT COMPLIANCE RIDER

FOR NEW YORK CITY CONTRACTORS

The Iran Divestment Act of 2012, effective as of April 12, 2012, is codified at State Finance Law ("SFL") §165-a and General Municipal Law ("GML") §103-g. The Iran Divestment Act, with certain exceptions, prohibits municipalities, including the City, from entering into contracts with persons engaged in investment activities in the energy sector of Iran. Pursuant to the terms set forth in SFL §165-a and GML §103-g, a person engages in investment activities in the energy sector of Iran if:

(a) The person provides goods or services of twenty million dollars or more in the energy sector of Iran, including a person that provides oil or liquefied natural gas tankers, or products used to construct or maintain pipelines used to transport oil or liquefied natural gas, for the energy sector of Iran; or

(b) The person is a financial institution that extends twenty million dollars or more in credit to another person, for forty-five days or more, if that person will use the credit to provide goods or services in the energy sector in Iran and is identified on a list created pursuant to paragraph (b) of subdivision three of Section 165-a of the State Finance Law and maintained by the Commissioner of the Office of General Services.

A bid or proposal shall not be considered for award nor shall any award be made where the bidder or proposer fails to submit a signed and verified bidder's certification.

Each bidder or proposer must certify that it is not on the list of entities engaged in investment activities in Iran created pursuant to paragraph (b) of subdivision 3 of Section 165-a of the State Finance Law. In any case where the bidder or proposer cannot certify that they are not on such list, the bidder or proposer shall so state and shall furnish with the bid or proposal a signed statement which sets forth in detail the reasons why such statement cannot be made. The City of New York may award a bid to a bidder who cannot make the certification on a case by case basis if:

(1) The investment activities in Iran were made before the effective date of this section (i.e., April 12, 2012), the investment activities in Iran have not been expanded or renewed after the effective date of this section and the person has adopted, publicized and is implementing a formal plan to cease the investment activities in Iran and to refrain from engaging in any new investments in Iran: or

(2) The City makes a determination that the goods or services are necessary for the City to perform its functions and that, absent such an exemption, the City would be unable to obtain the goods or services for which the contract is offered. Such determination shall be made in writing and shall be a public document.

APPRENTICESHIP PROGRAM QUESTIONNAIRE ("APQ")

Bidder Name: HALCYON CONST. CORP.

Project ID Number: QED-1014

The Bidder MUST complete, sign, and submit this Apprenticeship Program Questionnaire with its bid.

1. Does the bidder have any Apprenticeship Program agreement(s) appropriate for the type and scope of work to be performed? (Note: Participation may be by either direct sponsorship or through collective bargaining agreement(s).)

   X YES _____NO

2. Has/have the bidder's Apprenticeship Program agreement(s) been registered with, and approved by the New York State Commissioner of Labor ("NYSDOL Commissioner")?

   X YES _____NO

3. Has/have the bidder's Apprenticeship Program successfully passed the two-year Probation period following its initial registration with the New York State Department of Labor ("NYSDOL")?

   X YES _____NO

If the answers to Questions 1, 2, and 3 are "Yes". The bidder shall, in the space below (and/or attached herewith where applicable), provide the contact information for such Apprenticeship Program(s) as well as information demonstrating that such Apprenticeship Program(s) have passed the two-year Probation period following its initial registration with the NYSDOL. (The bidder may attach additional pages if necessary).

- **Where the bidder directly sponsors any such apprenticeship Program(s),** the bidder shall provide the following:
  - The trade classification(s) covered by such program(s), and the date(s) such program(s) was/were approved by the NYSDOL Commissioner; and/or
  - A copy of a letter(s) from the NYSDOL, on NYSDOL's letterhead, executed by an official thereof, which verifies/verify the trade classification(s) covered by such program(s), and the date(s) such program(s) was/were approved by the NYSDOL Commissioner and the Active status of such program(s).

- **Where the bidder participates in any such Apprenticeship Program(s) through its membership in an employer organization(s) that directly sponsors such program(s) or where the employer association(s) participates in such program(s) through collective bargaining,** the bidder shall provide the following:
  - The contact information for the employer organization(s), and the apprenticeable trade(s) covered pursuant to the bidder's affiliation therewith, and the date such program(s) was/were approved by the NYSDOL Commissioner; or
  - A letter(s) from such employer organization(s), on letterhead of such organization(s), executed by an officer, delegate or official thereof, which verifies/verify the trade classification(s) covered by such program(s) was/were approved by the NYSDOL Commissioner, and that the bidder is both a member in good standing of the identified employer organization and is subject to the provisions of the Apprenticeship Program agreement(s) sponsored thereby.

APPRENTICESHIP PROGRAM QUESTIONNAIRE ("APQ")

Project ID Number: CXED-1014

- **Where the bidder participates in any such Apprenticeship Programs through collective bargaining agreements,** the bidder shall provide the following:
  - The contact information for such collective bargaining entity(ies) and the apprenticeable trade(s) covered pursuant to the bidder's affiliation therewith;
  - A letter(s) from such collective bargaining entity(ies), on letterhead of such entity(ies), executed by an officer, delegate or official thereof, which verifies/verify the bidder's status as a signatory/participant in good standing to such collective bargaining entity(ies) Apprenticeship Program Agreements.

HALCYON CONSTRUCTION CORP.
65 MARBLE AVENUE
PLEASANTVILLE, NEW YORK 10570

Bidder: HALCYON CONSTRUCTION CORP.

By: _____ Title: VP

(Signature of Partner or Corporate Officer)

Date: 5/26/2016

SCHEDULE B – PART III – REQUEST FOR WAIVER OF M/WBE PARTICIPATION REQUIREMENT

Tax ID # 13-2995431 FMS Vendor ID # 0000806638

Business Name HALCYON CONSTRUCTION CORP.

Contact Name SAL LEOPOLDO Telephone # 914-490-5581 Email SLEOPOLDO63@GMAIL.COM

Type of Procurement ☒ Competitive Sealed Bids ☐ Other Bid/Response Due Date APRIL 15, 2016

APT E-PIN # (for this procurement): 85016B0110 Contracting Agency: NYCDDC

M/WBE Participation Goals as described in bid/solicitation documents

10 % Agency M/WBE Participation Goal

Proposed M/WBE Participation Goal as *anticipated by vendor seeking waiver*

4 % of the total contract value anticipated in good faith by the bidder/proposer to be subcontracted for services and/or credited to an M/WBE Prime Contractor or Qualified Joint Venture.

☐ Vendor does not subcontract services, and has the capacity and good faith intention to perform all such work itself with its own employees.

☒ Vendor subcontracts *some* of this type of work but at a *lower* % than bid/solicitation describes, and has the capacity and good faith intention to do so on this contract. (Attach subcontracting plan outlining services that the vendor will self-perform and subcontract to other vendors or consultants.)

☐ Vendor has other legitimate business reasons for proposing the M/WBE Participation Goal above. Explain under separate cover.

List 3 most recent contracts performed for NYC agencies (if any). Include information for each subcontract awarded in performance of such contracts. Add more pages if necessary

CONTRACT NO. MED-600B	AGENCY NYCDDC	DATE COMPLETED 7/2016
Total Contract Amount $ 19816000	Total Amount Subcontracted $ 1,387,000-	
Item of Work Subcontracted and Value of subcontract ASP. PAVING 600,000-	Item of Work Subcontracted and Value of subcontract WELDING/COMPACTION $512,000	Item of Work Subcontracted and Value of subcontract TREEWORK/ELECTRICAL $275,000
CONTRACT NO. MED-600	AGENCY NYCDDC	DATE COMPLETED 12/2012
Total Contract Amount $ 25,000,000	Total Amount Subcontracted $ 1538,441	
Item of Work Subcontracted and Value of subcontract UTILITY CONSULTANT 807,000	Item of Work Subcontracted and Value of subcontract PAVING/WELDING 591,441-	Item of Work Subcontracted and Value of subcontract ELECTRICAL 140,000-
CONTRACT NO. GE-349	AGENCY NYCDDC/DEP	DATE COMPLETED 6/2012
Total Contract Amount $ 10,000,000	Total Amount Subcontracted $ –	
Item of Work Subcontracted and Value of subcontract – 0	Item of Work Subcontracted and Value of subcontract 0	Item of Work Subcontracted and Value of subcontract – 0

List 3 most recent contracts performed for other entities. Include information for each subcontract awarded in performance of such contracts. Add more pages if necessary.

(Complete ONLY if vendor has performed fewer than 3 New York City contracts.)

TYPE OF Contract _____ ENTITY _____ DATE COMPLETED _____

Manager at entity that hired vendor (Name/Phone No./Email) _____

Total Contract Amount $ _____ Total Amount Subcontracted $ _____

Type of Work Subcontracted _____

TYPE OF Contract _____ AGENCY/ENTITY _____ DATE COMPLETED _____

Manager at agency/entity that hired vendor (Name/Phone No./Email) _____

Total Contract Amount $ _____ Total Amount Subcontracted $ _____

Item of Work Subcontracted and Value of subcontract _____ Item of Work Subcontracted and Value of subcontract _____ Item of Work Subcontracted and Value of subcontract _____

TYPE OF Contract _____ AGENCY/ENTITY _____ DATE COMPLETED _____

Manager at entity that hired vendor (Name/Phone No./Email) _____

Total Contract Amount $ _____ Total Amount Subcontracted $ _____

Item of Work Subcontracted and Value of subcontract _____ Item of Work Subcontracted and Value of subcontract _____ Item of Work Subcontracted and Value of subcontract _____

VENDOR CERTIFICATION: *I hereby affirm that the information supplied in support of this waiver request is true and correct, and that this request is made in good faith.*

Signature: _____ Date: 3/31/2016

Print Name: SAL LEOPOLD Title: V.P.

Shaded area below is for agency completion only

AGENCY CHIEF CONTRACTING OFFICER APPROVAL

Signature: _____ Date: 4/1/16

CITY CHIEF PROCUREMENT OFFICER APPROVAL

Signature: _____ Date: 4/13/16

Waiver Determination

Full Waiver Approved: ☐

Waiver Denied: ☐

Partial Waiver Approved: ☑

Revised Participation Goal 7 %

HALCYON CONSTRUCTION

CORPORATE RESUME

To Whom It May Concern:

Halcyon Construction Corporation is a General Contracting Corporation with expertise in the field of **Sewers, Sewage Treatment Plants, Water Mains, Water Treatment Plants, Heavy and Highway Construction, Site Work, Electric/Telephone/Gas Main Relocation and Installation, and Pump Stations.**

Please place us on your bidding list for any present and future contract work.

Very truly yours,
HALCYON CONSTRUCTION CORPORATION

Charles D. Casarella, P.E.
President

HALCYON CONSTRUCTION CORPORATION

HISTORICAL COMMENT

Halcyon Construction Corporation was organized in 1979 bringing to the construction industry of the tri-state area, a professional organization with the capabilities of designing and constructing Civil and Mechanical projects of varying magnitudes.

Halcyon is indemnified by the Travelers Insurance Company, through the agency of
USI Northeast, of Briarcliff Manor, New York
(Mr. William D. Haas, Account Manager).

International Union of Operating Engineers

LOCAL UNION 15, 15-A, 15-B, 15-C & 15-D
AFFILIATED WITH A.F.L.-C.I.O.
Building & Construction Trades Council of New York City
44-40 11TH STREET • LONG ISLAND CITY, NY 11101

Tel: (212) 929-5327
FAX # (718) 729-3070

Daniel J. Schneider
Acting President and Business Manager

BUSINESS REPRESENTATIVES

ROBERT G. SHAW
AUGUSTINO MARTINIELLO
ANDREW K. CULLIMORE

CHRISTOPHER R. THOMAS
MICHAEL A. SALERNO

ROBERT J. BURNS
ANTHONY R. LAROSA
THOMAS A. CALLAHAN

January 15, 2013

Halcyon Construction Corp.
65 Marble Avenue
Pleasantville, NY 10570

Re: International Union of Operating Engineers, Local 15, 15A Training Fund

To Whom It May Concern:

This is to certify that Halcyon Construction Corp. is signatory to a Collective Bargaining Agreement with Local 15, 15A, 15C and 15D, International Union of Operating Engineers.

Local 15, 15A Apprenticeship Skill Improvement and Training Fund has a New York State Department of Labor Apprenticeship Training Program. As signatory to said Local 15-15A Collective Bargaining Agreement, Halcyon Construction Corp. may request an Apprentice from this Training Program on any of their jobsites.

If you require any further information, please do not hesitate to contact me.

Very truly yours,

Daniel J. Schneider
Acting President and Business Manager

DJS/rmp

INTERNATIONAL UNION OF OPERATING ENGINEERS

AFFILIATED WITH THE A.F.L.-C.I.O.

LOCAL UNION 14-14B

February 1, 2013

To Whom It May Concern:

Kindly allow this letter to confirm that Halcyon Construction Corp. is signatory to a current collective bargaining agreement with the International Union of Operating Engineers, Local 14-14B, AFL-CIO. The Operating Engineers Local 14-14B Joint Apprenticeship Committee is a registered apprenticeship program recognized by the New York State Department of Labor that has been providing apprentice opportunities for registered apprentices in accordance with the training standards approved by the Department of Labor since May 1, 1994.

In the event that you have any questions, please contact our office.

Very truly yours,

Edwin L. Christian
President & Business Manager

ELC:cp

141-57 NORTHERN BOULEVARD, FLUSHING, N.Y. 11354 • TEL. (718) 939-0600 • FAX (718) 939-3131

LOCAL 1536 & 740
CARPENTERS/MILLWRIGHT

INTERIM COMPLIANCE AGREEMENT
INDEPENDENT CONSTRUCTION AGREEMENTS
EFFECTIVE JULY 01, 2011

CONTRACTOR:

ACCT #

This Interim Compliance Agreement will confirm that we have agreed to extend our current Collective Bargaining Agreement (the "Agreement") with the District Council of New York and Vicinity of the United Brotherhood of Carpenters and Joiners of America, (the "Union"), which may expire on June 30, 2011, on the following terms:

Article I
Extension of Term

Not withstanding any express termination date contained in the Agreement, the Agreement shall remain in full force and effective until Union negotiates the successor Agreement with the Association (The "Association(s)") whose members perform work similar to the work performed by the Contractor. The "Associations" include the Building Contractors Association ("BCA"), Association of Wall-Ceiling & Carpentry Industries of New York ("Wall-Ceiling"), Contractors Association of Greater New York ("CAGNY"), Greater Metro New York Resilient Floor Coverers Association ("Floor Coverers") Hoisting Trade Association of New York ("Hoisting Trades") the Cement League and Concrete Contractors of Long Island, General Contractors Association, The New York City Millwright Contractors Association, Association of Dockbuilders, Marine Divers and Pile Drivers, New York Trade Show Contractors Association.

Article II
Retroactive Application of New Agreement

When the Union concludes negotiations with the Association(s), whose members perform work similar to the work performed by this firm, all terms and conditions of the newly negotiated Agreement (the "New Agreement(s)"), including but not limited to, wages, fringe benefits, the arbitration provisions, effective dates and all other terms and conditions of employment, as agreed between the Union and the Association(s), shall be binding on our firm, retroactive to July 01, 2011.

Article III
No Refund of Contribution or Wages

Notwithstanding anything contained herein to the contrary, the Trustees of the various fringe benefit funds of the Union shall not be required to refund any contributions due to a negotiated decrease, if any, in benefit rates contained in the New Agreement(s). Nor shall any employee be required to refund any wages due to a negotiated decrease, if any, in wage rates contained in the New Agreement(s).

Article IV
No-Strike Provision

If the Union reaches an impasse with any of the Associations, whose members perform work similar to the work performed by this firm, and engage in an economic strike against its members, the Union will not engage in an economic strike against the firm. Notwithstanding anything contained herein to the contrary, the Union reserves the right to lawfully strike, at the Union's option, against our firm, our successor, our assignee, our parent and our subsidiary, which perform such work or other work as a subcontractor for the Association(s), or its affiliates, against whom the Union is engaged in a strike.

Article V
Execution and Compliance with New Agreement

Our firm, its successors and/or assignees, shall execute successor agreement(s) within five (5) days of the receipt of the Union's request. However, our firm shall be bound to the terms contained in the New Agreement(s) retroactive to July 01, 2011, by virtue of executing this agreement, regardless of whether it actually executes a successor agreement.

Article VI
Direct Negotiations

If the Union is unable to reach an agreement with the Association(s) for terms and conditions of employment for a successor agreement, upon ten (10) days oral or written notice to our firm, the Union, at its sole option, may cancel the No-Strike Provision of this agreement and demand that direct negotiations be opened with our firm to negotiate a successor Collective Bargaining Agreement.

In Witness Whereof, the parties hereto make and enter into this Interim Compliance Agreement, and we, their duly authorized and empowered representatives, have hereunto set our hands and seal this:

Contractor:

	PRESIDENT	CHARLES CASTRICUM
OFFICER'S SIGNATURE	**TITLE**	**PRINT NAME**

Date Signed:

DISTRICT COUNCIL OF NEW YORK CITY AND VICINITY OF THE UNITED BROTHERHOOD OF CARPENTERS AND JOINERS OF AMERICA

By: Michael J. Forde

Blasters, Drillrunners and Miners Union

118

Local 29

Thomas Russo
Business Manager

George Capria
Secretary-Treasurer

Affiliated with
Laborers' International Union of North America

43-12 DITMARS BLVD. • ASTORIA, NY 11105
Phone: 718-278-5800 • Fax: 718-278-8111

May 29, 2012

Halcyon Construction
65 Marble Avenue
Pleasantville, NY 10570

Re: Blasters, Drillrunners and Miners Union Local #29
Agreement to Comply

Dear Sir or Madam:

As you know, Blasters, Drillrunners and Miners Union Local #29's collective bargaining agreement ("cba") is scheduled to expire on June 30, 2012. Negotiations are presently underway with the General Contractors Association ("GCA"). In the event a settlement cannot be reached on or before July 1, 2012, we ask that you immediately review and sign the attached Agreement to Comply ("ATC") and return same for our files. By signing the ATC, your Company will be permitted to continue to work for an additional ninety (90) days in the event settlement is not reached on a new cba with the GCA by July 1, 2012.

Thank you for your anticipated cooperation.

Very truly yours,

Thomas Russo

By: _____
Thomas Russo
Business Manager

AGREEMENT TO COMPLY

FROM: HALCYON CONSTRUCTION CORP.

TO: BLASTERS, DRILLRUNNERS AND MINERS UNION LOCAL #29
43-12 Ditmars Boulevard, Astoria, NY 11105

Gentleman:

This letter will confirm our agreement to extend the Collective Bargaining Agreement ("Agreement") currently in existence between our Company and you on the following terms and conditions:

1. The new Agreement to be made between you and our Company will commence on and as of July 1, 2012 any and all newly negotiated rates of wages and fringe benefit contributions, as well as all other terms and conditions of employment, will become effective as of that date.

2. We shall continue to make payment of wages and fringe benefits at the last rate provided in the Agreement we made as of July 1, 2006 – June 30, 2012 until such time as the new rates are agreed upon.

3. The rates of wages and fringe benefits contributions to be set forth in our new Agreement will be the same as those negotiated by you with the General Contractors Association of New York, Inc. ("GCA") and all other terms and conditions will be substantially the same, as well.

4. We are aware of the fact that representatives are now engaged in negotiating a new Agreement with the GCA. Therefore, in consideration for signing this Agreement to Comply ("ATC") both parties agree as follows: First, if you do not reach an Agreement with the GCA and, therefore engage in an economic strike against any of its members, it is understood and agreed that you will not engage in an economic strike against our firm for a period of ninety (90) days beginning with the expiration of the current Agreement. Second, this Agreement will also be binding if this Company, or any successor or assignee thereof, or its parent or a subsidiary thereof, performs work on behalf of, or as a subcontractor for, any person(s), firm(s) or corporation(s) which is/are affiliated with the GCA in the event you are engaged in an economic strike. Third, the signing of the ATC shall signify that both parties have agreed to knowingly waive their mutual right of issuing a ninety (90) day notice of contract termination.

5. It is hereby agreed that our Company, its successors and assigns, will within five (5) days of receipt of your request to execute the new prepared Agreement, in the

form, or substantially as described above, sign and abide by said new Agreement and immediately and within such five (5) days period, pay any difference in wages and fringe benefits retroactive to July 1, 2012.

6. In the unlikely event that a dispute or disagreement arises over the interpretation of the terms and conditions of this ATC, both parties have the right to submit this matter to arbitration, pursuant to the grievance/arbitration provision contained in the July 1, 2006 Collective Bargaining Agreement.

Yours truly,

HALCYON CONSTRUCTION CORP.
65 MARBLE AVENUE
PLEASANTVILLE, NEW YORK 10570

Name of Company

Street Address

By: _____
Signature of Principal

City, State, Zip

Title: PRESIDENT

914-741-1112
(Area Code-Telephone #)

CHARLES CASAMASSA
Please type/print the name of the principal whose name appears above)

Dated: 6/15/2012

BLASTERS AND DRILLRUNNERS UNION LOCAL 29 OF THE LABORERS' INTERNATIONAL UNION OF NORTH AMERICA AFL-CIO

By _____
Thomas Russo
Business Manager

By _____
Secretary-Treasurer

FOR AND ON BEHALF OF, AND AUTHORIZED BY, THE MEMBERS OF GENERAL CONTRACTORS ASSOCIATION OF NEW YORK, INC. AND OTHER EMPLOYERS WHO HAVE APPOINTED THE GENERAL CONTRACTORS ASSOCIATION OF NEW YORK, INC. AS THEIR COLLECTIVE BARGAINING AGENT, WHOSE NAMES ARE ATTACHED HERETO IN EXHIBIT I.

By _____
Christopher O. Ward
Managing Director

THE HALCYON CONST. CORP.

Joseph Zuzzolo (OWNER)
JOSEPH ZUZZOLO

AGREEMENT

between

THE BLASTERS, DRILLRUNNERS AND MINERS UNION LOCAL 29 AND BUILDING LABORERS

of

THE LABORERS INTERNATIONAL UNION OF NORTH AMERICA

and

MEMBERS OF THE GENERAL CONTRACTORS ASSOCIATION OF NEW YORK, INC.

JULY 1, 2006 - JUNE 30, 2012

Plumbers Local Union No. 1
158-29 George Meany Blvd.
Howard Beach, New York 11414
Phone: 1-718-738-7500
Fax: 1-718-835-0896

Joint Plumbing Industry Board
158-29 George Meany Blvd.
Howard Beach, New York 11414
Phone: 1-718-835-2700
Fax: 1-718-641-8155

Trade Education Facility
Plumbers Local Union No. 1
37-11 47th Avenue
Long Island City, New York 11101
Phone: 1-718-752-9630
Fax: 1-718-752-9634

National Pension Fund
103 Oronoco Street
Alexandria, Virginia 22314
Phone: 1-800-638-7442
Fax: 1-301-739-9017

United Association
901 Massachusetts Avenue N.W.
Washington, D.C. 20001
Phone: 1-202-628-5823
Fax: 1-202-628-5024

Association of Contracting Plumbers of the
City of New York, Inc.
44 West 28th Street - 12th Floor
New York, New York 10001
Phone: 1-212-481-4580
Fax: 1-212-481-7185

AN AGREEMENT

•

between

ASSOCIATION OF CONTRACTING
PLUMBERS OF THE CITY OF
NEW YORK, INC.

and

LOCAL UNION NO. 1
of the
UNITED ASSOCIATION
of
JOURNEYMEN AND APPRENTICES
of the
PLUMBING AND PIPEFITTING INDUSTRY
OF
UNITED STATES AND CANADA

Effective date, July 1, 2007
Termination date, June 30, 2010

BUILDING, CONCRETE, EXCAVATING & COMMON LABORERS' UNION LOCAL No. 731

of

GREATER NEW YORK, LONG ISLAND AND VICINITY

of the

LABORERS' INTERNATIONAL UNION OF NORTH AMERICA

INDEPENDENT AGREEMENT

JULY 1, 2012 to JUNE 30, 2016

118

AGREEMENT TO COMPLY

Mailed 6-11-12

FROM: #1738
Halcyon Construction Corp.
65 Marble Ave
Pleasantville, NY 10570

TO: BUILDING, CONCRETE, EXCAVATING & COMMON LABORERS UNION LOCAL No. 731
3411 35th Avenue, Astoria, New York 11106

Gentleman:

This letter will confirm our agreement to extend the Collective Bargaining Agreement ("Agreement") currently in existence between our Company and you on the following terms and conditions:

1. The new Agreement to be made between you and our Company will commence on and as of July 1, 2012 and all rates of wages and fringe benefit contributions, as well as all other terms and conditions of employment, will become effective as of that date.

2. We shall continue to make payment of wages and fringe benefits at the last rate provided in the Agreement we made as of July 1, 2006 – June 30, 2012 until such time as the new rates are agreed upon.

3. The rates of wages and fringe benefits contributions to be set forth in our new Agreement will be the same as those negotiated by you with the General Contractors Association of New York, Inc. ("GCA") and all other terms and conditions will be substantially the same, as well.

4. We are aware of the fact that your representatives are now engaged in negotiating a new Agreement with the GCA. Therefore, in consideration for signing this Agreement to Comply both parties agree as follows: First, if you do not reach an Agreement with the GCA and, therefore engage in an economic strike against any of its members, it is understood and agreed that you will not engage in an economic strike against our firm for a period of ninety (90) days beginning with the expiration of the current Collective Bargaining Agreement. Second, this Agreement will also be binding if this Company, or any successor or assignee thereof, or its parent or a subsidiary thereof, performs work on behalf of, or as a subcontractor for, any person(s), firm(s) or corporation(s) which is/are affiliated with the GCA in the event you are engaged in an economic strike. Third, the signing of the Agreement to Comply shall signify that both parties have agreed to knowingly waive their mutual right of issuing a ninety (90) day notice of contract termination.

5. It is hereby agreed that our Company, its successors and assigns, will within five (5) days of receipt of your request to execute the new prepared Agreement, in the form, or substantially as described above, sign and abide by said new Agreement and immediately and within such five (5) days period, pay any differences in wages and fringe benefits retroactive to July 1, 2012.

6. In the unlikely event that a dispute or disagreement arises over the interpretation of the terms and conditions of this Agreement to Comply, both parties have the right to submit this matter to arbitration, pursuant to the grievance/arbitration provision contained in the July 1, 2006 Collective Bargaining Agreement.

Yours truly,

HALCYON CONST. CORP.
Name of Company

By: Joseph Zuzzolo
Signature of Principal

Title: OWNER

JOSEPH ZUZZOLO
(Please type/print the name of the principal whose name appears above)

65 MARBLE AVE.
Street Address

PLEASANTVILLE, N.Y. 10570
City, State, Zip

914-741-1112
(Area Code-Telephone #)

Dated: 6/8/2012

TOTAL P.02

Project ID. QED-1014

SAFETY QUESTIONNAIRE

The bidder must include, with its bid, all information requested on this Safety Questionnaire. Failure to provide a completed and signed Safety Questionnaire at the time of bid opening may result in disqualification of the bid as non-responsive.

1. Bidder Information:

Company Name: HALCYON CONSTRUCTION CORP. 65 MARBLE AVENUE PLEASANTVILLE, NEW YORK 10570

DDC Project Number: QED-1014

Company Size: _____ Ten (10) employees or less

X Greater than ten (10) employees

Company has previously worked for DDC X YES _____ NO

2. Type(s) of Construction Work

TYPE OF WORK	LAST 3 YEARS	THIS PROJECT
General Building Construction		
Residential Building Construction		
Nonresidential Building Construction		
Heavy Construction, except building		
Highway and Street Construction	X	X
Heavy Construction, except highways	X	X
Plumbing, Heating, HVAC		
Painting and Paper Hanging		
Electrical Work		
Masonry, Stonework and Plastering		
Carpentry and Floor Work		
Roofing, Siding, and Sheet Metal		
Concrete Work		
Specialty Trade Contracting		
Asbestos Abatement		
Other (specify)		

3. Experience Modification Rate:

The Experience Modification Rate (EMR) is a rating generated by the National Council of Compensation Insurance (NCCI). This rating is used to determine the contractor's premium for worker's compensation insurance. The contractor may obtain its EMR by contacting its insurance broker or the NCCI. If the contractor cannot obtain its EMR, it must submit a written explanation as to why.

Project ID. QED-1014

If the contractor's Incident Rate for any of the past three years is one point higher than the Incident Rate for the type of construction it performs (listed below), the contractor must attach, to this questionnaire, a written explanation for the relatively high rate.

General Building Construction	8.5
Residential Building Construction	7.0
Nonresidential Building Construction	10.2
Heavy Construction, except building	8.7
Highway and Street Construction	9.7
Heavy Construction, except highways	8.3
Plumbing, Heating, HVAC	11.3
Painting and Paper Hanging	6.9
Electrical Work	9.5
Masonry, Stonework and Plastering	10.5
Carpentry and Floor Work	12.2
Roofing, Siding, and Sheet Metal	10.3
Concrete Work	8.6
Specialty Trade Contracting	8.6

5. Safety Performance on Previous DDC Project(s)

X YES ___ NO Contractor previously audited by the DDC Office of Site Safety.

DDC Project Number(s): MED-606, MED600B, MED600

X YES ___ NO Accident on previous DDC Project(s).

DDC Project Number(s): MED-606, MED600B, MED600

___ YES X NO Fatality or Life-altering Injury on DDC Project(s) within the last three years. [Examples of a life-altering injury include loss of limb, loss of a sense (e.g., sight, hearing), or loss of neurological function].

DDC Project Number(s): _____, _____, _____

Date: 5/25/2016 By: _____

(Signature of Owner, Partner, Corporate Officer)

Title: V.P.

Project ID. QED-1014

The Contractor must indicate its Intrastate and Interstate EMR for the past three years. [Note: For contractors with less than three years of experience, the EMR will be considered to be 1.00].

YEAR	INTRASTATE RATE	INTERSTATE RATE
2016	.94	
2015	1.00	
2014	1.03	
2013	.93	

If the Intrastate and/or Interstate EMR for any of the past three years is greater than 1.00, the contractor must attach, to this questionnaire, a written explanation for the rating and identify what corrective action was taken to correct the situation resulting in that rating.

4. OSHA Information:

____ YES X NO Contractor has received a willful violation issued by OSHA or New York City Department of Buildings (NYCDOB) within the last three years.

____ YES X NO Contractor has had an incident requiring OSHA notification within 8 hours (i.e., fatality, or hospitalization of three or more employees).

The Occupational Safety and Health Act (OSHA) of 1970 requires employers with ten or more employees, on a yearly basis to complete and maintain on file the form entitled "Log of Work-related Injuries and Illnesses". This form is commonly referred to as the OSHA 300 Log (OSHA 200 Log for 2001 and earlier).

The OSHA 300 Log must be submitted for the last three years for contractors with more than ten employees.

The Contractor must indicate the total number of hours worked by its employees, as reflected in payroll records for the past three years.

The contractor must submit the Incident Rate for Lost Time Injuries (the Incident Rate) for the past three years. The Incident Rate is calculated in accordance with the formula set forth below. For each given year, the total number of incidents is the total number of non-fatal injuries and illnesses reported on the OSHA 300 Log. The 200,000 hours represents the equivalent of 100 employees working forty hours a week, fifty weeks per year.

$$\text{Incident Rate} = \frac{\text{Total Number of Incidents X 200,000}}{\text{Total Number of Hours Worked by Employees}}$$

YEAR	TOTAL NUMBERS OF HOURS WORKED BY EMPLOYEES	INCIDENT RATE
2015	157,070	3.82
2014	137,682	1.45
2013	141,681	0

OSHA's Form 300A (Rev. 01/2004)

Summary of Work-Related Injuries and Illnesses

Year 20 1 5

U.S. Department of Labor
Occupational Safety and Health Administration
Form approved OMB no. 1218-0176

All establishments covered by Part 1904 must complete this Summary page, even if no work-related injuries or illnesses occurred during the year. Remember to review the Log to verify that the entries are complete and accurate before completing this summary.

Using the Log, count the individual entries you made for each category. Then write the totals below, making sure you've added the entries from every page of the Log. If you had no cases, write "0."

Employees, former employees, and their representatives have the right to review the OSHA Form 300 in its entirety. They also have limited access to the OSHA Form 301 or its equivalent. See 29 CFR Part 1904.35, in OSHA's recordkeeping rule, for further details on the access provisions for these forms.

Number of Cases

Total number of deaths	Total number of cases with days away from work	Total number of cases with job transfer or restriction	Total number of other recordable cases
0	2	0	0
(G)	(H)	(I)	(J)

Number of Days

Total number of days away from work	Total number of days of job transfer or restriction
21	0
(K)	(L)

Injury and Illness Types

Total number of . . . (M)

(1) Injuries	3	(4) Poisonings	0
		(5) Hearing loss	0
(2) Skin disorders	0	(6) All other illnesses	0
(3) Respiratory conditions	0		

Post this Summary page from February 1 to April 30 of the year following the year covered by the form.

Establishment information

Your establishment name: Halcyon Construction Corp

Street: 65 Marble Avenue

City: Pleasantville State: NY ZIP: 10570

Industry description (*e.g., Manufacture of motor truck trailers*): Construction

Standard Industrial Classification (SIC), if known (*e.g., 3715*): 4 6 2 4

OR

North American Industrial Classification (NAICS), if known (e.g., 336212): ___ ___ ___ ___ ___ ___

Employment information

(If you don't have these figures, see the Worksheet on the back of this page to estimate.)

Annual average number of employees: 76

Total hours worked by all employees last year: 157070

Sign here

Knowingly falsifying this document may result in a fine.

I certify that I have examined this document and that to the best of my knowledge the entries are true, accurate, and complete.

Christine Gencarelli — Company executive
PR Mgr/HR Admin — Title
(914)741-1112 — Phone
01/8/16 — Date

OSHA's Form 300 (Rev. 01/2004)

Log of Work-Related Injuries and Illnesses

Attention: This form contains information relating to employee health and must be used in a manner that protects the confidentiality of employees to the extent possible while the information is being used for occupational safety and health purposes.

Year 20 1 5

U.S. Department of Labor
Occupational Safety and Health Administration

Form approved OMB no. 1218-0176

You must record information about every work-related death and about every work-related injury or illness that involves loss of consciousness, restricted work activity or job transfer, days away from work, or medical treatment beyond first aid. You must also record significant work-related injuries and illnesses that are diagnosed by a physician or licensed health care professional. You must also record work-related injuries and illnesses that meet any of the specific recording criteria listed in 29 CFR Part 1904.8 through 1904.12. Feel free to use two lines for a single case if you need to. You must complete an Injury and Illness Incident Report (OSHA Form 301) or equivalent form for each injury or illness recorded on this form. If you're not sure whether a case is recordable, call your local OSHA office for help.

Establishment name Halcyon Construction Corp

City Pleasantville State New York

Identify the person			Describe the case			Classify the case (CHECK ONLY ONE box for each case based on the most serious outcome for that case:)				Enter the number of days the injured or ill worker was:		Check the "Injury" column or choose one type of illness:					
								Remained at Work				(M)					
(A) Case no.	(B) Employee's name	(C) Job title (*e.g., Welder*)	(D) Date of injury or onset of illness	(E) Where the event occurred (*e.g., Loading dock north end*)	(F) Describe injury or illness, parts of body affected, and object/substance that directly injured or made person ill (*e.g., Second degree burns on right forearm from acetylene torch*)	Death (G)	Days away from work (H)	Job transfer or restriction (I)	Other recordable cases (J)	Away from work (K)	On job transfer or restriction (L)	Injury (1)	Skin disorder (2)	Respiratory condition (3)	Poisoning (4)	Hearing loss (5)	All other illnesses (6)
01	Rodrigues, Carlos	Millwright	10/09 (month/day)	Grand Street NYC	Sprain Right Ankle		X			15 days	days	X					
02	Portelli, Jonathan	Lab Foreman	12/23 (month/day)	Southern Blvd NYC	Crushed Right Thumb		X			6 days	days	X					
03	Zuzzolo, Anthony	Super	02/22 (month/day)	58th Street	Flash Burns To Eyes From Welding					days	days	X					
			/ (month/day)							days	days						
			/ (month/day)							days	days						
			/ (month/day)							days	days						
			/ (month/day)							days	days						
			/ (month/day)							days	days						
			/ (month/day)							days	days						
			/ (month/day)							days	days						
			/ (month/day)							days	days						
			/ (month/day)							days	days						
			/ (month/day)							days	days						
			/ (month/day)							days	days						
			/ (month/day)							days	days						
Page totals ➤						0	2	0	0	21		3	0	0	0	0	0
												Injury (1)	Skin disorder (2)	Respiratory condition (3)	Poisoning (4)	Hearing loss (5)	All other illnesses (6)

Be sure to transfer these totals to the Summary page (Form 300A) before you post it.

Page ___ of ___

OSHA's Form 300 (Rev. 01/2004)

Log of Work-Related Injuries and Illnesses

Attention: This form contains information relating to employee health and must be used in a manner that protects the confidentiality of employees to the extent possible while the information is being used for occupational safety and health purposes.

Year 20 14

U.S. Department of Labor
Occupational Safety and Health Administration

Form approved OMB no. 1218-0176

You must record information about every work-related death and about every work-related injury or illness that involves loss of consciousness, restricted work activity or job transfer, days away from work, or medical treatment beyond first aid. You must also record significant work-related injuries and illnesses that are diagnosed by a physician or licensed health care professional. You must also record work-related injuries and illnesses that meet any of the specific recording criteria listed in 29 CFR Part 1904.8 through 1904.12. Feel free to use two lines for a single case if you need to. You must complete an injury and illness incident Report (OSHA Form 301) or equivalent form for each injury or illness recorded on this form. If you're not sure whether a case is recordable, call your local OSHA office for help.

Establishment name HALCYON CONST. CORP.
City PLEASANTVILLE State NY

Identify the person			Describe the case			Classify the case — CHECK ONLY ONE box for each case based on the most serious outcome for that case:				Enter the number of days the injured or ill worker was:		Check the "Injury" column or choose one type of illness:					
								Remained at Work				(M)					
(A) Case no.	(B) Employee's name	(C) Job title (e.g., *Welder*)	(D) Date of injury or onset of illness	(E) Where the event occurred (e.g., *Loading dock north end*)	(F) Describe injury or illness, parts of body affected, and object/substance that directly injured or made person ill (e.g., *Second degree burns on right forearm from acetylene torch*)	(G) Death	(H) Days away from work	(I) Job transfer or restriction	(J) Other record-able cases	(K) Away from work	(L) On job transfer or restriction	(1) Injury	(2) Skin disorder	(3) Respiratory condition	(4) Poisoning	(5) Hearing loss	(6) All other illnesses
1	SILVA, ADELIO	FOREMAN	5/14 month/day	GRAND ST NYC	KNOCKED OUT BY WOODEN BEAM	☐	☑	☐	☐	148 days	___ days	☑	☐	☐	☐	☐	☐
			/ month/day		ON CHIN	☐	☐	☐	☐	___ days	___ days	☐	☐	☐	☐	☐	☐
			/ month/day			☐	☐	☐	☐	___ days	___ days	☐	☐	☐	☐	☐	☐
			/ month/day			☐	☐	☐	☐	___ days	___ days	☐	☐	☐	☐	☐	☐
			/ month/day			☐	☐	☐	☐	___ days	___ days	☐	☐	☐	☐	☐	☐
			/ month/day			☐	☐	☐	☐	___ days	___ days	☐	☐	☐	☐	☐	☐
			/ month/day			☐	☐	☐	☐	___ days	___ days	☐	☐	☐	☐	☐	☐
			/ month/day			☐	☐	☐	☐	___ days	___ days	☐	☐	☐	☐	☐	☐
			/ month/day			☐	☐	☐	☐	___ days	___ days	☐	☐	☐	☐	☐	☐
			/ month/day			☐	☐	☐	☐	___ days	___ days	☐	☐	☐	☐	☐	☐
			/ month/day			☐	☐	☐	☐	___ days	___ days	☐	☐	☐	☐	☐	☐
			/ month/day			☐	☐	☐	☐	___ days	___ days	☐	☐	☐	☐	☐	☐
			/ month/day			☐	☐	☐	☐	___ days	___ days	☐	☐	☐	☐	☐	☐
					Page totals ➤	0	1	0	0	148	0	1	0	0	0	0	0
												Injury (1)	Skin disorder (2)	Respiratory condition (3)	Poisoning (4)	Hearing loss (5)	All other illnesses (6)

Be sure to transfer these totals to the Summary page (Form 300A) before you post it.

Public reporting burden for this collection of information is estimated to average 14 minutes per response, including time to review the instructions, search and gather the data needed, and complete and review the collection of information. Persons are not required to respond to the collection of information unless it displays a currently valid OMB control number. If you have any comments about these estimates or any other aspects of this data collection, contact: US Department of Labor, OSHA Office of Statistical Analysis, Room N-3644, 200 Constitution Avenue, NW, Washington, DC 20210. Do not send the completed forms to this office.

Page ___ of ___

OSHA's Form 300A (Rev. 01/2004)

Summary of Work-Related Injuries and Illnesses

Year 20 14

U.S. Department of Labor
Occupational Safety and Health Administration
Form approved OMB no. 1218-0176

All establishments covered by Part 1904 must complete this Summary page, even if no work-related injuries or illnesses occurred during the year. Remember to review the Log to verify that the entries are complete and accurate before completing this summary.

Using the Log, count the individual entries you made for each category. Then write the totals below, making sure you've added the entries from every page of the Log. If you had no cases, write "0."

Employees, former employees, and their representatives have the right to review the OSHA Form 300 in its entirety. They also have limited access to the OSHA Form 301 or its equivalent. See 29 CFR Part 1904.35, in OSHA's recordkeeping rule, for further details on the access provisions for these forms.

Number of Cases

Total number of deaths	Total number of cases with days away from work	Total number of cases with job transfer or restriction	Total number of other recordable cases
0	1	0	0
(G)	(H)	(I)	(J)

Number of Days

Total number of days away from work	Total number of days of job transfer or restriction
148	0
(K)	(L)

Injury and Illness Types

Total number of . . .

	(M)		
(1) Injuries	1	(4) Poisonings	0
(2) Skin disorders	0	(5) Hearing loss	0
(3) Respiratory conditions	0	(6) All other illnesses	0

Post this Summary page from February 1 to April 30 of the year following the year covered by the form.

Public reporting burden for this collection of information is estimated to average 58 minutes per response, including time to review the instructions, search and gather the data needed, and complete and review the collection of information. Persons are not required to respond to the collection of information unless it displays a currently valid OMB control number. If you have any comments about these estimates or any other aspects of this data collection, contact: US Department of Labor, OSHA Office of Statistical Analysis, Room N-3644, 200 Constitution Avenue, NW, Washington, DC 20210. Do not send the completed forms to this office.

Establishment information

Your establishment name HALCYON CONST CORP.

Street 65 MARBLE AVENUE

City MEDIANVILLE State NY ZIP 10570

Industry description (e.g., Manufacture of motor truck trailers) CONSTRUCTION

Standard Industrial Classification (SIC), if known (e.g., 3715) 4624

OR

North American Industrial Classification (NAICS), if known (e.g., 336212)

Employment information (If you don't have these figures, see the Worksheet on the back of this page to estimate.)

Annual average number of employees 69

Total hours worked by all employees last year 137682

Sign here

Knowingly falsifying this document may result in a fine.

I certify that I have examined this document and that to the best of my knowledge the entries are true, accurate, and complete.

Company executive [signature] Title PRES.

Phone 914 741-1112 Date 12/18/14

OSHA's Form 300 (Rev. 01/2004)

Log of Work-Related Injuries and Illnesses

Note: You can type input into this form and save it. Because the forms in this recordkeeping package are "fillable/writable" PDF documents, you can type into the input form fields and then save your inputs using the free Adobe PDF Reader. In addition, the forms are programmed to auto-calculate as appropriate.

Attention: This form contains information relating to employee health and must be used in a manner that protects the confidentiality of employees to the extent possible while the information is being used for occupational safety and health purposes.

Year 20 13

U.S. Department of Labor
Occupational Safety and Health Administration

You must record information about every work-related death and about every work-related injury or illness that involves loss of consciousness, restricted work activity or job transfer, days away from work, or medical treatment beyond first aid. You must also record significant work-related injuries and illnesses that are diagnosed by a physician or licensed health care professional. You must also record work-related injuries and illnesses that meet any of the specific recording criteria listed in 29 CFR Part 1904.8 through 1904.12. Feel free to use two lines for a single case if you need to. You must complete an Injury and Illness Incident Report (OSHA Form 301) or equivalent form for each injury or illness recorded on this form. If you're not sure whether a case is recordable, call your local OSHA office for help.

Form approved OMB no. 1218-0176

Establishment name HALCYON CONST. CORP.

City PLEASANTVILLE State NY

Identify the person			Describe the case			Classify the case (SELECT ONLY ONE box for each case based on the most serious outcome for that case:)				Enter the number of days the injured or ill worker was:		Select the "injury" column or choose one type of illness: (M)					
(A) Case no.	(B) Employee's name	(C) Job title (e.g., Welder)	(D) Date of injury or onset of illness (e.g., 2/10)	(E) Where the event occurred (e.g., Loading dock north end)	(F) Describe injury or illness, parts of body affected, and object/substance that directly injured or made person ill (e.g., Second degree burns on right forearm from acetylene torch)	Death (G)	Days away from work (H)	Remained at Work: Job transfer or restriction (I)	Remained at Work: Other recordable cases (J)	Away from work (K)	On job transfer or restriction (L)	Injury (1)	Skin disorder (2)	Respiratory condition (3)	Poisoning (4)	Hearing loss (5)	All other illnesses (6)
Reset	NONE		/ month / day							days	days						
Reset			/ month / day							days	days						
Reset			/ month / day							days	days						
Reset			/ month / day							days	days						
Reset			/ month / day							days	days						
Reset			/ month / day							days	days						
Reset			/ month / day							days	days						
Reset			/ month / day							days	days						
Reset			/ month / day							days	days						
Reset			/ month / day							days	days						
Reset			/ month / day							days	days						
					Page totals ▶	0	0	0	0	0	0	0	0	0	0	0	0
												Injury (1)	Skin disorder (2)	Respiratory condition (3)	Poisoning (4)	Hearing loss (5)	All other illnesses (6)

Public reporting burden for this collection of information is estimated to average 14 minutes per response, including time to review the instructions, search and gather the data needed, and complete and review the collection of information. Persons are not required to respond to the collection of information unless it displays a currently valid OMB control number. If you have any comments about these estimates or any other aspects of this data collection, contact: US Department of Labor, OSHA Office of Statistical Analysis, Room N-3644, 200 Constitution Avenue, NW, Washington, DC 20210. Do not send the completed forms to this office.

Save Input

Add a Form Page

OSHA's Form 300A (Rev. 01/2004)

Summary of Work-Related Injuries and Illnesses

Note: You can type input into this form and save it. Because the forms in this recordkeeping package are "fillable/writable" PDF documents, you can type into the input form fields and then save your inputs using the free Adobe PDF Reader.

Year 20 13

U.S. Department of Labor
Occupational Safety and Health Administration

Form approved OMB no 1218-0176

All establishments covered by Part 1904 must complete this Summary page, even if no work-related injuries or illnesses occurred during the year. Remember to review the Log to verify that the entries are complete and accurate before completing this summary.

Using the Log, count the individual entries you made for each category. Then write the totals below, making sure you've added the entries from every page of the Log. If you had no cases, write "0."

Employees, former employees, and their representatives have the right to review the OSHA Form 300 in its entirety. They also have limited access to the OSHA Form 301 or its equivalent. See 29 CFR Part 1904.35, in OSHA's recordkeeping rule, for further details on the access provisions for these forms.

Number of Cases

Total number of deaths	Total number of cases with days away from work	Total number of cases with job transfer or restriction	Total number of other recordable cases
0	0	0	0
(G)	(H)	(I)	(J)

Number of Days

Total number of days away from work	Total number of days of job transfer or restriction
0	0
(K)	(L)

Injury and Illness Types

Total number of . . . (M)

(1) Injuries	0	(4) Poisonings	0
(2) Skin disorders	0	(5) Hearing loss	0
(3) Respiratory conditions	0	(6) All other illnesses	0

Post this Summary page from February 1 to April 30 of the year following the year covered by the form.

Establishment information

Your establishment name: HALCYON CONST. CORP.

Street: 65 MAPLE AVENUE

City: PLEASANTVILLE State: NY Zip: 10570

Industry description (*e.g., Manufacture of motor truck trailers*): CONSTRUCTION

Standard Industrial Classification (SIC), if known (*e.g., 3715*): 4624

OR

North American Industrial Classification (NAICS), if known (e.g., 336212):

Employment information (*If you don't have these figures, see the Worksheet on the next page to estimate.*)

Annual average number of employees: 58

Total hours worked by all employees last year: 141,681

Sign here

Knowingly falsifying this document may result in a fine.

I certify that I have examined this document and that to the best of my knowledge the entries are true, accurate, and complete.

Company executive: [signature] Title: PR Mgr.

Phone: 914-741-1112 Date: 03/04/14

Save Input

Fairfield County Bank
Insurance Services

June 13, 2016

City of New York
Department of Design Construction
30-30 Thompson Avenue
Long Island City NY 11101

RE: The Halcyon Construction Corp
Experience Modification Factor

Dear Sir:

In regard to the current experience modification factor for The Halcyon Construction Corp please be advised that in the period of 2/1/14 the mod was 1.03.

In reviewing the data that had been submitted to the New York State Workers Compensation Board , we have compiled a report using the currently valued loss history and audited payrolls for the 2010-2013period.

The report shows one large loss in 2012-2013 term which impacted the experience modification and without this loss the modification factor would be below a 1.00.

The loss occurred on May 7th, 2012. Their employee who was crossing the street to enter the project site, had to jump out of the way to avoid a vehicle that had gotten too close to him. The employee was not struck by the vehicle, but had injured himself getting out of the way. The Halcyon Construction Corp had proper procedures in place and the project site was secure.

The Halcyon Construction Corp does use the services of The Leahy Company Inc., to verify all data submitted to the Workers Compensation Board and to determine if there have been any statistical reporting errors.

The Insured has a very good claims history, and their 2015 experience mod was 1.00 and

P.O. BOX 969 • 401 MAIN STREET • RIDGEFIELD CT 06877-8969
Tel: 203.438.0404 • Fax: 203.431.8789 • www.fairfieldcountybankinsurance.com

their latest declared mod factor for 2016 is .94.
Please advise if you have any questions, or need any additional information to complete your file.

Sincerely

AnnMarie Spencer
203-894-3188

Fairfield County Bank
Insurance Services

June 13th, 2016

Halcyon Construction Corp
65 Marble Avenue
Pleasantville NY , 10570

Re: Workers Compensation
Experience Rating Modification Factor

Dear Charles Casarella:

In regard to your New York State Workers Compensation Rating Modification Factor for your current and last five years please be advised of the following:

2012	Experience Mod Factor	1.01
2013	Experience Mod Factor	.93
2014	Experience Mod Factor	1.03
2015	Experience Mod Factor	1.00
2016	Experience Mod Factor	.94

If you have any questions or would like any additional information please do not hesitate to call.

Sincerely,

AnnMarie Spencer

P.O. BOX 969 • 401 MAIN STREET • RIDGEFIELD CT 06877-8969
Tel: 203.438.0404 • Fax: 203.431.8789 • www.fairfieldcountybankinsurance.com

CORPORATE OFFICERS AND PARTNERS

Charles D Casarella, P.E., President

Joseph Zuzzolo, P.E., Owner

Joseph Zuzzolo, P.E.
Principal

Mr. Zuzzolo is a graduate of New York University with a B.S. in Mechanical Engineering and an M.S. in Engineering Mechanics. He is also a licensed Professional Engineer in the State of New York.

With over forty years of experience in construction management, Mr. Zuzzolo has developed an expertise in heavy subsurface construction, including wastewater treatment plants and pump stations, throughout New York, Pennsylvania and the City of New York. He presently oversees all Halcyon field operations while administrating general and technical endeavors within the organization, as well as bidding.

Charles D. Casarella, P.E.
President

Mr. Casarella is a graduate of New York University with a B.S. in Civil Engineering and he is a licensed Professional Engineer in the State of New York.

Mr. Casarella has forty years experience in construction, including eight years as Senior Engineer for the Westchester County Department of Environmental Facilities and twenty-five years in construction of water mains, sewers, site work, pump stations and treatment plants.

Mr. Casarella presently oversees all corporate finances, administration, bidding and engineering.

MANAGEMENT

Sal Leopoldo	Executive Vice President/ Estimator
Assadollah A. Dilmaghani	Vice President/Estimator
Michael Grobarcik	Vice President/General Superintendant
David Yonelunas	Project Manager
Maria Dioguardi	Controller
Anthony Zuzzolo	Project Superintendent/ Safety Officer
Joseph Monte	Project Superintendant
Michael Murnin	Project Superintendent
Paul Janda	Project Engineer

Sal V. Leopoldo
Executive Vice President/ Estimator

Mr. Leopoldo is a graduate of Westchester Community College with an A.A.S. in Civil Technology and an A.A.S. in Engineering Science.

Mr. Leopoldo's twenty seven years experience includes various positions as Construction Superintendent, Project Manager, Project Estimator and Executive Vice President.

Mr. Leopoldo is presently chief administrator for all corporate Civil projects from bid to construction.

Assadollah A. Dilmaghani
Vice President/Estimator

Mr. Dilmaghani is a graduate of the Polytechnical Institute of New York, Brooklyn, New York with a B.S. in Mechanical Engineering and an M.S. in Industrial Engineering.

Mr. Dilmaghani's Thirty years experience includes the position of Area Engineer for the City of New York, Department of Environmental Protection.

Mr. Dilmaghani is presently chief administrator for all corporate mechanical projects from bid to construction.

Michael Grobarcik, P.E.
Vice President/ General Superintendant

Mr. Grobarcik is a graduate of the University of Illinois with a B.S. in Civil Engineering. He has Forty years experience including affiliation as Chief Engineer, Resident Engineer and Project Manager responsible for construction of the Yonkers Sewage Treatment Plant, Wakegan Sewage Treatment Plant, Wakegan Illinois, Subdivision construction in Westchester County and Pumping Stations in Rockland County, New York.

Mr. Grobarcik has acted as Project Manager for various Sewer and Watermain Construction projects, as well as Mechanical Installation projects throughout New York City and Westchester County.

Anthony Zuzzolo
Project Superintendent/ Safety Officer

Mr. Zuzzolo is a graduate of Pratt Institute in Brooklyn, New York with a B.S. in Construction Management. Mr. Zuzzolo's thirteen years experience includes supervising various Sewer, Watermain, and Sewage Treatment Plant Rehabilitation Projects.

Mr. Zuzzolo is also the designated O.S.H.A. Safety Officer whose training has included:

a) Confined Space Entry; General Industry; Final Rule
b) Excavation Standard - Competent Person
c) Personal Protective Equipment
d) Fall Protection

Maria Dioguardi
Controller

Ms. Dioguardi is a graduate of Fordham University with a B.B.A. in Finance.

Ms. Dioguardi's has twenty five years experience in construction accounting which includes managing and supervising accounting departments for companies with over $500 million in annual revenue. She has extensive experience working with Project Managers to monitor direct costs and maintain budgetary data and is responsible for all fiscal tracking, reporting and analysis.

Equipment

The historical overview of Halcyon Construction Corporation has been to not maintain an equipment fleet of a major magnitude, but to rely on the multiple resources afforded by major equipment manufactures and/or distributors. We do, however, maintain the following as our in-house fleet:

(10) CAT 446 Backhoe
(1) Kamatsu Dozer D-341
(1) Ford 6-wheel Dump Truck
Miscellaneous Boring Equipment
Miscellaneous Generators, Lasers, Lights, Welders, Compressors, Tools, Trucks, Trailers Vans, Etc.
(2) CAT 330 Excavators
(6) 315 Excavator
(1) 320 Excavator
(1) 938 Loaders
(1) 950 Loader
(1) Sterling Boom truck w/26 ton crane
(2) 4" Hydraulic pumps
(8) 3" pumps
(1) 10-Ton Caterpillar Vibratory Road Compactor
(1) 5-Ton Caterpillar Asphalt Roller

Miscellaneous other equipment includes:

A. Light towers
B. Message Boards
C. Arrow Boards
D. Compressors
E. Slide Rail Systems
F. Roadway Plates

CORRTECH

CORROSION ENGINEERING
INFRASTRUCTURE TECHNOLOGIES

NYC DDC QED 1014
CP System Survey and Engineering Study of Soils and Stray Currents Cathodic Protection System Design

Prepared For:

NYC Department of Design and Construction
30-30 Thomson Ave
Long Island City, NY 11101

Prepared By:

CorrTech, Inc.
25 South Street
Hopkinton, MA 01748
CorrTech, Inc. Report No. 8284-4681
NYC DDC Task Order 023

May 2016

Certificate of No Change Form

Mayor's Office of Contract Services

- Please submit two completed forms. Copies will not be accepted.
- Please send both copies to the agency that requested it, unless you are advised to send it directly to the Mayor's Office of Contract Services (MOCS).
- A materially false statement willfully or fraudulently made in connection with this certification, and/or the failure to conduct appropriate due diligence in verifying the information that is the subject of this certification, may result in rendering the submitting entity non-responsible for the purpose of contract award.
- A materially false statement willfully or fraudulently made in connection with this certification may subject the person making the false statement to criminal charges

I, CHARLES CASARELLA, being duly sworn, state that I have read
Enter Your Name

and understand all the items contained in the vendor questionnaire and any submission of change as identified on page one of this form and certify that as of this date, these items have not changed. I further certify that, to the best of my knowledge, information and belief, those answers are full, complete, and accurate; and that, to the best of my knowledge, information, and belief, those answers continue to be full, complete, and accurate.

In addition, I further certify on behalf of the submitting vendor that the information contained in the principal questionnaire(s) and any submission of change identified on page two of this form have not changed and have been verified and continue, to the best of my knowledge, to be full, complete and accurate.

I understand that the City of New York will rely on the information supplied in this certification as additional inducement to enter into a contract with the submitting entity.

Vendor Questionnaire *This section is required.*

This refers to the vendor questionnaire(s) submitted for the vendor doing business with the City.

Name of Submitting Entity: HALCYON CONSTRUCTION CORP.

Vendor's Address: 65 MARBLE AVENUE PLEASANTVILLE, NEW YORK 10570

Vendor's EIN or TIN: [illegible] Requesting Agency: NYCDDC

Are you submitting this Certification as a parent? (Please circle one) Yes (No)

Signature date on the last full vendor questionnaire signed for the submitting vendor: 12/23/2015

Signature date on change submission for the submitting vendor: 12/23/2015

STATEMENT OF LIMITATION

The conclusions presented in this document are based on the services described and not on tasks or procedures beyond the scope of the described procedures or the time and budgetary constraints imposed by the contract limitations.

CorrTech, Inc. has performed this assessment in a professional manner using that degree of skill and care exercised for similar projects under similar conditions by reputable and competent consultants, and in accordance with the procedures established within CorrTech's quality assurance, quality control protocol.

CorrTech, Inc. shall not be responsible for conditions or consequences arising from relevant facts that were concealed, withheld or not fully disclosed at the time the evaluation was performed.

CORROSION NACE SCOTT H. PAUL 4163 SPECIALIST

Report Reviewed by:
Scott Paul, P.E.
NACE Corrosion Specialist No. 4163
May 2016

Report Prepared by:
Ted Midura, P.E.
NACE Cathodic Protection Technician No. 31210

Table of Contents

INTRODUCTION

On June 28th, 2011, CorrTech, Inc. entered into agreement with the NYC Department of Design and Construction with the expectation of providing cathodic protection design, construction support, field testing, final system testing, and as-built documentation. The QED 1014 project is located in Queens, New York, along Crescent St, 31st Ave, and 41st St. It is estimated that approximately 7993 linear feet of 52-in steel pipe and associated fittings are to be installed under this contract. Approximately 6,902-ft of pipe is being slip line inserted and 1,091-ft is direct bury pipe. Approximately 65-ft of 48-in; 158-ft of 72-in; and 50-ft of 20-in piping is also to be installed as part of this system. These segments of pipe, isolated at all ends, will be protected by a cathodic protection system designed by CorrTech. Work is being completed under CorrTech, Inc. Job No. 8284, Task 023, and issued under contract GEDRC001, registration number 20121401831.

Field testing was performed on May 3, 2016 in order to obtain soil resistivity data and to perform stray current monitoring in the approximate areas in which the new steel water main is to be installed. During this visit, testing was completed in specific areas associated with the route of the new piping system. Data collected has been used to design the sacrificial cathodic protection system. In addition to the field testing, a cursory review of area utilities was completed.

CorrTech, Inc. provides corrosion engineering expertise in accordance with specifications section 5.04A. Furnishing, installing and testing corrosion control and/or cathodic protection System was done in accordance with New York City Department of Environmental Protection (NYCDEP) "Specifications for Trunk Main Work".[1]

CONCLUSION

Based on the field testing protocol and test results obtained during the system evaluation and energization, the following conclusions are presented:

1. The average soil resistivity measured along the construction route was found to be approximately 11,607 ohm-cm. Measured values ranged from 2,000 ohm-cm to 24,000 ohm-cm. The soil resistivity study indicates that the area soils are classified as mildly less corrosive to metallic structures. Steel piping installed in this area will require corrosion control measures that will include a bonded polyurethane external dielectric coating system, host pipe grouting and sacrificial anode cathodic protection that will provide adequate corrosion control for in excess of 90 years.

2. Stray current effects measured along the construction route are considered to be significant. The magnitude of variations observed near the rail crossing, clearly indicates the existence of dynamic stray DC voltage effects.

[1] This publication includes "Special Provisions for Trunk Main Work"; and "Specification for Furnishing, Delivering and Laying Steel Pipe and Appurtenances".

RECOMMENDATIONS

While the soils in the area are considered mildly corrosive, the effect of dynamic stray current and minimum life expectancy of 50 years must be considered. In order to protect against passive corrosion and active corrosion caused by stray current, the newly installed steel pipe should be installed with an external coating system, electrical isolation, and sacrificial anode type cathodic protection system. The following are required for the system to function as designed:

1. Flange isolation assemblies are required where the new steel pipe connects to existing piping. Insulating flanges must also be installed at all butterfly valve chambers and at any/all ductile iron or cast iron main connections. These have been indicated on the design drawings

2. The new steel piping must have a high quality dielectric coating, such as the polyurethane coating system, for any and all steel pipe surfaces that are in contact with the surrounding soil and host pipe grout environment. The dielectric coating system should be applied to all piping associated with the air cock hydrants and blow-off assemblies.

3. Sacrificial magnesium anodes, permanent reference electrodes, pipe test wires, steel counter electrodes and flush-to-grade test stations at the locations indicated on the design drawings must be installed adjacent to the direct-buried piping, as per design drawings. All test stations must be installed on the inside of nearby curbs in order to prevent the enclosures from being subject to vehicular traffic and to make them easier to locate for future testing.

4. FRP shields must be installed around the pipe at any/all points of contact with reinforced concrete piles or similar structures. Electrical isolation between the new steel piping and other structures is of critical importance.

5. Casing spacers shall be utilized to provide dielectric separation between the existing 60-in lock bar steel host pipe and new 52-in insertion slip line pipe.

6. Electrical isolation must be monitored during installation. Any values less than 500-ohms shall be resolved before proceeding with additional pipe slip lining.

7. Final testing shall be performed by CorrTech personnel in concert with the REI team. Testing must verify that the installed cathodic protection system meets the criteria set forth by NACE International Standard Practice SP0169, which requires control of external corrosion on underground or submerged metallic piping systems at all locations.

8. Based on the cathodic protection design worksheets and pipe network, the following table summarizes the direct-buried pipe segments for QED 1014:

Pipe Segment	Location and Description	No of Anodes	No of Anode Test Stations
1	CRESCENT ST BETWEEN 34TH AVE AND 33RD AVE	7	1
2	CRESCENT ST BETWEEN 33RD AVE AND BROADWAY	7	1
3	CRESCENT ST AND 31ST ROAD	10	1
4	CRESCENT ST BETWEEN 31ST ROAD AND 31ST AVE	13	1
5	CORNER OF CRESCENT ST AND 31ST AVE	45	1
6	31ST AVE BETWEEN 29TH ST AND 30TH ST	10	1
7A	31ST AVE BETWEEN 30TH ST AND 31ST ST	12	1
7B	31ST AVE BETWEEN 30TH ST AND 31ST ST	12	1
8	31ST AVE BETWEEN 31ST ST AND 32ND ST	6	1
9	31ST AVE BETWEEN 32ND ST AND 33RD ST	10	1
10	31ST AVE BETWEEN 35TH ST AND 36TH ST	10	1
11	31ST AVE BETWEEN 37TH ST AND 38TH ST	5	1
12	31ST AVE BETWEEN STEINWAY ST AND 41ST ST	10	1
13	CORNER OF 31ST AVE AND 41ST ST	30	1
14A	41ST ST BETWEEN NEWTOWN RD AND 30TH AVE	14	1
14B	41ST ST BETWEEN NEWTOWN RD AND 30TH AVE	14	1
15	41ST ST AT 28TH AVE	15	1
16	41ST ST BETWEEN 28TH AVE AND 25TH AVE	10	1
17	41ST ST AT 25TH AVE	40	1
18	41ST ST AT 25TH AVE	8	1
19	41ST ST AT 25TH AVE	4	1
	TOTAL	**292**	**21**

DISCUSSION

The coated steel water main piping associated with project QED 1014 consists of 52-inch slip line, and open trench steel water main. Testing was completed in and around Crescent Street, 31st Ave, and 41st St, following the layout of the piping system.

The purpose of the pre-constructing testing and subsequent evaluation is to quantify the levels of stray traction DC currents and to evaluate the area soil resistivity along the proposed construction route. Stray current testing was performed in and around the area where the new pipe will be installed. Significant stray current effects were measured near the MTA subway tracks crossing 31st Ave.

A reference cell-to-reference cell potential profile obtained in the area indicates that potential variations are considered significant as well. The potential measurements obtained indicated variations of approximately 0.135-volts or less (as monitored over a 30-minute period). The proposed area of construction for the new steel water main being installed as part of QED 1014 will be subjected to adverse effects from stray traction DC currents. Mitigation techniques employed in this design include a dielectric coating of the pipe, the use of galvanic anodes for corrosion protection, proper isolation of the piping segments subjected to the stray current, and isolation of the 52-in carrier piping from the 60-in casing achieved by means of dielectric casing spacers.

Soil resistivity measurements were obtained at fourteen (14) locations using a Collins Rod and calibrated Wheatstone Bridge. Depths obtained ranged from 3-feet to 4-feet. The data obtained is shown in Appendix I of this report. Soil resistivity ranged from a low of 2k ohm-cm to a high of 24k ohm-cm. Low resistivity areas were measured at locations that are likely subject to accumulation of road salt, among other contaminants. The mean soil resistivity is approximately 11.6k Ω-cm. This is a reasonable representation of the average soil resistivity in this area.

Only a small portion of the piping will be in contact with the soil directly. The majority of the piping will be inside the host pipe and surrounded by concrete grout.

The measurement of soil resistivity has been used for years as an indicator of the corrosivity of soil. Soil resistivity is the reciprocal of conductivity; the lower the resistivity, the easier current flows through the soil. Of the measurable soil characteristics, resistivity is generally accepted as the primary indicator of soil corrosivity. Resistivity is a property of the bulk volume of soil and electrolytes.

Although no universal standard has been accepted, (by an organization such as the American Society for Testing and Materials or the National Association of Corrosion Engineers), it is generally agreed that the classification shown below, or other similar classifications, reflect soil corrosivity.

Resistivity (Ohm-Cm)	Classification
< 1,000	Extremely Corrosive
1,000 to 3,000	Highly Corrosive
3,000 to 5,000	Corrosive
5,000 to 10,000	Moderately Corrosive
10,000 to 25,000	Mildly Corrosive
> 25,000	Progressively Less Corrosive

The above table provides qualitative insight to the expected corrosion exposure of a metallic structure in a soil of known resistivity. Accordingly, deterioration can generally be expected to be rapid and relatively severe in soils below 1,000 ohm-cm. This does not mean, however, that severe corrosion will not occur in soils of higher resistivity. In fact, depending on chemical conditions, severe corrosion can occur in soils above 25,000 ohm-cm. The table only indicates that the latter occurrence is generally not observed.

The review of the plans for the new steel water main indicates that there are multiple ties to existing structures. The installation of insulating flanges is required for any/all tie-ins to the existing water supply network, as well as any butterfly valve connections and at any/all ductile iron or cast iron distribution tie-in points. The installation of electrical isolation flange assemblies produces a more concise, manageable cathodic protection system.

The cathodic protection design created by CorrTech, Inc. assumes that the piping will be electrically isolated and provided with a high quality dielectric coating system, (such as the polyurethane coating system) and installed on all steel piping in contact with the soil environment. The piping associated with air cock hydrants and blow-offs should be coated with this coating system as well as electrically isolated from the steel trunk water main. There will be a total of 18 distinct segments associated with the QED 1014 project installation relative to cathodic protection. Please refer to Appendix II for the associated Ground Bed Design Worksheets.

SLIP-LINING

Slip lining has provided a viable option for trenchless pipe rehabilitation for years. This technique involves the insertion of a new pipe into an existing pipe. A new pipe with an outside dimension smaller than the inside dimension of the host pipe is either pulled or pushed into the host pipe. The ideal host pipe for slip lining are straight with no deformities, that is pipes with no or modest bends, no severe protrusions into the pipe, and only modest offset joints. Slip lining may be continuous or segmental. This project involves the insertion of a 52-in diameter, ½-in thick polyurethane coated and lined steel pipe into a 60-in lock bar riveted steel host pipe.

Casing spacers shall be utilized to provide dielectric separation between the existing 60-in lock bar steel host pipe and new 52-in insertion slip line pipe. In addition, the new pipe shall be coated with polyurethane coating on the external surface of the pipe and provided with sacrificial anode cathodic protection in the direct buried sections of piping (insertion pits). Electrical separation is essential to facilitate corrosion control and function of the sacrificial anode cathodic protection system.

Electrical isolation must be monitored during installation. For each of the sixteen individual insertion sections of slip lined pipe, the electrical resistance between the existing pipe and new slip line shall be measured every day. The measured resistance shall not be less than 500-ohms. The measurements shall be made in the presence of a resident inspector every day during pipe installation. Any values less than 500-ohms shall be resolved before proceeding with additional pipe slip lining.

To monitor the isolation of the 52-in piping from the 60-in piping after the installation is completed, casing test stations with reference cells and counter electrodes installed both inside and outside the casing annulus have been incorporated into the cathodic protection design.

DESIGN PARAMETERS

The following NYC DEP cathodic protection design criteria have been applied to facilitate the final design calculations:

- Percent of bare pipe 2.00%.
- Required current density 1.25 mA/ft² for direct buried piping.
- Pipe coating quality 25,000 ohm-cm
- 50-year design life for the cathodic protection anodes
- Anode consumption rate of 17-pounds per ampere-year
- 50% anode consumption utilization factor

For the segments of pipe inside the host pipe and encased in cementitious grout, the following design criteria have been applied:

- Percent of bare pipe 2.00%.
- Required current density 1 mA/ft².
- Pipe coating quality 25,000 ohm-cm
- 50-year design life for the cathodic protection anodes
- Anode consumption rate of 17-pounds per ampere-year
- 50% anode consumption utilization factor

The grout that will be used as fill between the new 52-in steel pipe and the existing 60-in steel host pipe has characteristics that differ greatly from the normal soil environment of direct buried pipe. Aside from the mechanical differences (higher yield; higher impermeability to moisture or air), the electrical and chemical qualities of the grout offer further corrosion protection. When fully set, the grout resistivity is extremely high (a typical value of 80,000 ohm-cm was used in this design). The grout is also more alkaline (pH close to 10) than what's normally encountered in soil, which is typically neutral with pH around 7. For steel, corrosion is inhibited in a more alkaline environment, and accelerated by a more acidic environment. The high resistivity combined with the high alkalinity of the grout inherently provides corrosion protection to the piping. This lowers the current requirement of the piping contacting the grout. A conservative value of 1mA/sqft was considered for the steel contacting the grout.

The magnesium anodes will be divided into groups and these groups will be distributed along the direct bury piping segments. Installing the anodes in individual groups enables current distribution to the 52-in piping in each segment, and provides multiple ground beds as backup in the event of damage to one groundbed.

The cathodic protection design has been prepared in accordance with NACE SP0169. NACE Standard Practice SP0169 (formerly RP0169), "Control of External Corrosion on Underground or Submerged Metallic Piping Systems". This standard practice presents procedures and practices for achieving effective control of external corrosion on buried or submerged metallic piping systems.

These recommendations are also applicable to many other buried or submerged metallic structures. They are intended for use by corrosion control personnel concerned with the corrosion of buried or submerged piping systems, including oil, gas, water, and similar structures. This standard describes the use of electrically insulating coatings, electrical isolation, and cathodic protection as external corrosion control methods. The standard contains specific provisions for the application of cathodic protection to existing bare, existing coated and to new piping systems. Also included are procedures for control of interference currents on pipelines.

Sacrificial anode cathodic protection provides protection with no external power source or rectifier. Sacrificial anodes are designed to corrode, thereby protecting the steel structure being installed. Energy for the sacrificial anode system is provided by the difference in the electrochemical level between the anode and the structure being protected. Typically, magnesium anodes are utilized to protect steel structures. The magnesium anode will corrode preferentially when connected to steel as part of a cathodic protection system. This is due to the fact that it sits at a higher electrochemical level.

A sacrificial anode installation is also a DC circuit with positive current supplied by the anodes and a return negative current supplied from the structure. The driving voltage of the sacrificial anode circuits is approximately 1.2 volt, the difference between magnesium and steel.

Ohm's Law (E=IR) is valid for DC circuits, where E is the driving voltage, or rectifier output, of the circuit, I is the resulting current magnitude and R is the resistance of the circuit. Proper system design seeks to minimize the resistance of the circuit through the use of an anode ground bed design. Sacrificial anode systems do not provide as much energy output as the impressed current design and therefore do not function properly in some applications where cathodic protection is required. Sacrificial systems require that the structure is first coated with a tightly adhered coating system and is also electrically isolated from all other metallic structures and system components. It is important to understand that pipe coating alone is not sufficient to provide complete corrosion control. Coatings must be supplemented with cathodic protection.[2]

NACE requirements specify that the cathodic protection of buried steel structures must be evidenced by two criteria. Firstly, adequate steel polarization is needed to ensure that the electrochemical processes have been established in order to arrest corrosion of the steel surface. Secondly, the cathodic protection design should be constructed and implemented in order to allow for field-testing protocol. Protection levels with respect to polarization criteria can then be verified. All testing is performed in order to demonstrate that adequate cathodic polarization exists on the protected structure. Polarization criteria must take into account any significant drop in the field measurements conducted. This is important both to satisfy the regulations as well as to ensure the preservation of pipe integrity. The primary focus of testing protocol and system design is to ensure that corrosion of any exposed steel has been mitigated.

[2] However, as defined in Sections 4 and 5 of NACE SP0169, cathodic protection can be provided to uncoated structures under certain conditions.

Sacrificial anode design utilizes a number of electrical parameters as input to the CorrTech, Inc. design calculation worksheet. The calculation worksheets for the total pipe section is included in this report as Appendix II.

In addition to the soil resistivity data, pipe geometry and anode dimensions and weight, the above design criteria are inputs to the design. The anode-to-remote earth resistance calculation is based on Dwight's Equation for a single horizontal anode.

$$R = \left(\frac{0.00521\rho}{L}\right)\left(\ln\left(\frac{4L^2 + 4L\sqrt{s^2 + L^2}}{dS}\right) + \frac{S}{L} - \frac{\sqrt{S^2 + L^2}}{L} - 1\right)$$

Where
R = resistance in ohms
L = anode length in feet
S = twice the depth of anode in feet
d = anode diameter in feet
ρ = resistivity in ohm-cm
ln is the natural logarithm function

This calculation provides the resistance for one (1) anode set in the measured average soil resistivity. The resistance to ground of the pipe is also calculated in the worksheet. Both the theoretical current requirement based on 1.25 mA/Ft² applied to the 2.00% of bare steel pipe and the circuit resistance of the pipe and anodes are calculated in the worksheet. The number of anodes to be installed is a variable input in the worksheet that determines total anode circuit resistance based on parallel resistance theory. The check in the design calculation worksheet indicates that the comparison of theoretical current compared to the field-tested circuit resistance, (as determined by the number of anodes to be installed), is between 0 and 25% and is in agreement.

The final total anode current output value is used to calculate the life of the anode system based on the magnesium anode consumption rate and 50% utilization. The life expectancy of anodes on these cathodically protected piping segments is in excess of 90 years.

Based on the cathodic protection design worksheets and pipe network, the following table summarizes the direct buried pipe segments for QED 1014:

Pipe Segment	Location and Description	No of Anodes	No of Anode Test Stations
1	CRESCENT ST BETWEEN 34TH AVE AND 33RD AVE	7	1
2	CRESCENT ST BETWEEN 33RD AVE AND BROADWAY	7	1
3	CRESCENT ST AND 31ST ROAD	10	1
4	CRESCENT ST BETWEEN 31ST ROAD AND 31ST AVE	13	1
5	CORNER OF CRESCENT ST AND 31ST AVE	45	1
6	31ST AVE BETWEEN 29TH ST AND 30TH ST	10	1
7A	31ST AVE BETWEEN 30TH ST AND 31ST ST	12	1
7B	31ST AVE BETWEEN 30TH ST AND 31ST ST	12	1
8	31ST AVE BETWEEN 31ST ST AND 32ND ST	6	1
9	31ST AVE BETWEEN 32ND ST AND 33RD ST	10	1
10	31ST AVE BETWEEN 35TH ST AND 36TH ST	10	1
11	31ST AVE BETWEEN 37TH ST AND 38TH ST	5	1
12	31ST AVE BETWEEN STEINWAY ST AND 41ST ST	10	1
13	CORNER OF 31ST AVE AND 41ST ST	30	1
14A	41ST ST BETWEEN NEWTOWN RD AND 30TH AVE	14	1
14B	41ST ST BETWEEN NEWTOWN RD AND 30TH AVE	14	1
15	41ST ST AT 28TH AVE	15	1
16	41ST ST BETWEEN 28TH AVE AND 25TH AVE	10	1
17	41ST ST AT 25TH AVE	40	1
18	41ST ST AT 25TH AVE	8	1
19	41ST ST AT 25TH AVE	4	1
	TOTAL	**292**	**21**

APPENDIX I

- Soil Resistivity Tabulations
- Stray Current Test Results
- Cathodic Protection Design Worksheet, 1 through 18 Segment(s)
- Material List- Engineers Estimate

CorrTech, Inc **Soil Resistivity**

Client: NYC DDC Job Number: 8284

Project: QED 1014 - Task Order 023 - Queens, NY Date: 5/2/2016

Test Number	Resistivity (ohm-cm)	Location	Soil Type
1	21,000	Crescent St and 34th St (NW Corner)	Grass
2	24,000	Crescent St and 34th St (NW Corner)	Treebed
3	5,500	31st St and 31st Ave (SE Corner)	Soil
4	20,500	31st St and 31st Ave (NE Corner)	Soil
5	11,000	31st Ave and 33rd St (NW Corner)	Treebed
6	2,000	On 31st Ave between 34th St and 35th St (North Side of St)	Treebed
7	4,000	On 31st Ave between 35th St and 36th St (North Side of St)	Soil
8	9,000	On 31st Ave between 38th St and Steinway St (North Side of St)	Soil
9	22,000	31st Ave and 41st St (NW Corner)	Soil
10	6,000	On 41st St between 31st Ave and Newtown Rd (West Side of St)	Treebed
11	19,000	41st St and Newtown Rd (NE Corner)	Treebed
12	4,000	On 41st St between Newtown Rd and 28th Ave (West Side of St)	Treebed
13	12,000	41st St and 28th Ave (NW Corner)	Treebed
14	2,500	41st St and 25th Ave (NE Corner)	Soil
AVG.	**11,607**	**(ohm-cm)**	

CorrTech Inc., Groundbed Design Worksheet
NYC DDC Water Trunk Main Cathodic Protection

Client: NYC DDC Project: QED 1014
Date: 5/3/16
Description: 52-in slip line into 60-in host pipe, with grout casing fill; 48-in, 20-in appurtenances
Segment: 1-17

Structure Calculations DIRECT BURY		ENTER		SURFACE AREA
Length of pipe	ft	1,091		14,841 ft2
Diameter	ft	4.33		
Length of pipe	ft	51		268 ft2
Diameter	ft	1.67		
Length of pipe	ft	13		163 ft2
Diameter	ft	4		
				15,272 ft2

Circuit Calculations			
Soil Resistivity (ohm-cm)	11,607		*average of 14 resistivities
Coating Quality (% bare)	2.00%		per DDC design standards
Pipe Surface requiring protection	305.44	FT2	
Pipe electrically isloated (yes/no)	yes		
Coating quality OHM-FT2	25000		per DDC design standards
Pipe to Earth Resistance	1.64	OHM	
Theoretical Current Required (mA/ft2)	1.25		per DDC design standards
Theoretical Current Requirements	0.3818	AMPS	0.1832629

Structure Calculations CONCRETE ENCASED		ENTER		SURFACE AREA
Length of pipe	ft	6,902		93,893 ft2
Diameter	ft	4.33		
Length of pipe	ft			0 ft2
Diameter	ft			
				93,893 ft2

Circuit Calculations				
Soil Resistivity (ohm-cm)	grout	80,000		typical value for grout (fully set)
Coating Quality (% bare)		2.00%		per DDC design standards
Pipe Surface requiring protection		1877.87	FT2	
Pipe electrically isloated (yes/no)		yes		
Coating quality OHM-FT2		25000		per DDC design standards
Pipe to Earth Resistance		0.27	OHM	
Theoretical Current Required (mA/ft2)		1		
Theoretical Current Requirements		1.8779	AMPS	1.12672

TOTAL theorectical current requirement 2.2597 AMPS

Anode Parameters			Individual anode resistance
Anode Type	Magnesium anode, prepackaged		20.07 square of S2+L2 factor
Anode Weight (lbs)	32		36.77 resistivity x .0052 factor
Anode Diameter (feet)	0.46 see notes below		1.19 log value
Anode Length (feet)	1.64 see notes below		62.50 Horizontal anode resistance
2 time anode depth (feet)	20		86.46 Vertical anode resistance

Circuit Resistance Current Requirements					
Anode Resistance to Earth	plug in Resistance value	62.50	OHMS		
Driving Potential (V)		1.2	VOLTS		
Individual anode output		0.019	AMPS	Check	Between 0% and 25%
Number of anodes to be installed		280		-17.43%	Yes
Total circuit resistance		0.45	OHMS		
Current output of system		2.6534	AMPS		
Consumption Rate (lb/A-yr)		17.00			
Anode life based on anodes to be installed		99.32	YEARS	considers 50% anode efficiency	

Design conforms to the following standards:
National Association of Corrosion Engineers (NACE)
Standard Recommended Practice SP 0169 latest revision

CORROSION NACE SCOTT M. PAUL 4163 SPECIALIST

NOTES on anode dimensions:

Bare anode dimensions were considered due to the fact that the life of the anode is more dependent on the actual anode size than the packaging backfill.

The backfill may leech into surrounding earth as time progresses, which will cause depletion not related to the anode performance or cathodic protection mechanisms.

Other than erosion / leeching effects described above, the anode backfill is NOT consumable and will remain stable throughout the operational life of the anode.

Dwight's formula, utilized above, does not consider the inherent resistivity of the backfill.

For this reason, bare anode dimensions, when factored into the calculations, offer more conservative estimates as to the number of anodes required.

CorrTech Inc., Groundbed Design Worksheet
NYC DDC Water Trunk Main Cathodic Protection

Client: NYC DDC Project: QED 1014
Date: 5/3/16
Description: 72-inch, 48-inch steel piping
Segment: 18

Structure Calculations DIRECT BURY		ENTER		SURFACE AREA
Length of pipe	ft	121		2,281 ft2
Diameter	ft	6		
Length of pipe	ft	42		528 ft2
Diameter	ft	4		
				2,809 ft2
Circuit Calculations				
Soil Resistivity (ohm-cm)		11,607		*average of 14 resistivities
Coating Quality (% bare)		2.00%		per DDC design standards
Pipe Surface requiring protection		56.17	FT2	
Pipe electrically isloated (yes/no)		yes		
Coating quality OHM-FT2		25000		per DDC design standards
Pipe to Earth Resistance		8.90	OHM	
Theoretical Current Required (mA/ft2)		1.25		per DDC design standards
Theoretical Current Requirements		0.0702	AMPS	0.033703

Structure Calculations CONCRETE ENCASED		ENTER		SURFACE AREA
Length of pipe	ft	0		0 ft2
Diameter	ft	4.33		
Length of pipe	ft			0 ft2
Diameter	ft			
				0 ft2
Circuit Calculations				
Soil Resistivity (ohm-cm)	grout	80,000		typical value for grout (fully set)
Coating Quality (% bare)		2.00%		per DDC design standards
Pipe Surface requiring protection		0.00	FT2	
Pipe electrically isloated (yes/no)		yes		
Coating quality OHM-FT2		25000		per DDC design standards
Pipe to Earth Resistance		N/A	OHM	
Theoretical Current Required (mA/ft2)		1		
Theoretical Current Requirements		0.0000	AMPS	#VALUE!

TOTAL theorectical current requirement		0.0702	AMPS	
				Individual anode resistance
Anode Parameters			20.07	square of S2+L2 factor
Anode Type		Magnesium anode, prepackaged	36.77	resistivity x .0052 factor
Anode Weight (lbs)		32	1.19	log value
Anode Diameter (feet)		0.46 see notes below	62.50	Horizontal anode resistance
Anode Length (feet)		1.64 see notes below		
2 time anode depth (feet)		20	86.46	Vertical anode resistance

Circuit Resistance Current Requirements					
Anode Resistance to Earth	plug in Resistance value	62.50	OHMS		
Driving Potential (V)		1.2	VOLTS		
Individual anode output		0.019	AMPS	Check	Between 0% and 25%
Number of anodes to be installed		8		-2.25%	Yes
Total circuit resistance		16.71	OHMS		
Current output of system		0.0718	AMPS		
Consumption Rate (lb/A-yr)		17.00			
Anode life based on anodes to be installed		**104.87**	**YEARS**	considers 50% anode efficiency	

Design conforms to the following standards:
National Association of Corrosion Engineers (NACE)
Standard Recommended Practice SP 0169 latest revision

CORROSION NACE SCOTT H. PAUL 4188 SPECIALIST

NOTES on anode dimensions:

Bare anode dimensions were considered due to the fact that the life of the anode is more dependent on the actual anode size than the packaging backfill.

The backfill may leech into surrounding earth as time progresses, which will cause depletion not related to the anode performance or cathodic protection mechanisms.

Other than erosion / leeching effects described above, the anode backfill is NOT consumable and will remain stable throughout the operational life of the anode.

Dwight's formula, utilized above, does not consider the inherent resistivity of the backfill.

For this reason, bare anode dimensions, when factored into the calculations, offer more conservative estimates as to the number of anodes required.

CorrTech Inc., Groundbed Design Worksheet
NYC DDC Water Trunk Main Cathodic Protection

Client: NYC DDC
Date: 5/3/16
Description: 72-inch, 48-inch steel piping
Segment: 19

Project: QED 1014

Structure Calculations DIRECT BURY		ENTER		SURFACE AREA
Length of pipe	ft	37		697 ft2
Diameter	ft	6		
Length of pipe	ft	10		126 ft2
Diameter	ft	4		
				823 ft2

Circuit Calculations			
Soil Resistivity (ohm-cm)	11,607		*average of 14 resistivities
Coating Quality (% bare)	2.00%		per DDC design standards
Pipe Surface requiring protection	16.46	FT2	
Pipe electrically isloated (yes/no)	yes		
Coating quality OHM-FT2	25000		per DDC design standards
Pipe to Earth Resistance	30.37	OHM	
Theoretical Current Required (mA/ft2)	1.25		per DDC design standards
Theoretical Current Requirements	0.0206	AMPS	0.0098772

Structure Calculations CONCRETE ENCASED		ENTER		SURFACE AREA
Length of pipe	ft	0		0 ft2
Diameter	ft	4.33		
Length of pipe	ft			0 ft2
Diameter	ft			
				0 ft2

Circuit Calculations				
Soil Resistivity (ohm-cm)	grout	80,000		typical value for grout (fully set)
Coating Quality (% bare)		2.00%		per DDC design standards
Pipe Surface requiring protection		0.00	FT2	
Pipe electrically isloated (yes/no)		yes		
Coating quality OHM-FT2		25000		per DDC design standards
Pipe to Earth Resistance		N/A	OHM	
Theoretical Current Required (mA/ft2)		1		
Theoretical Current Requirements		0.0000	AMPS	#VALUE!

TOTAL theorectical current requirement	0.0206	AMPS	

Anode Parameters			Individual anode resistance
Anode Type	Magnesium anode, prepackaged		20.07 square of S2+L2 factor
Anode Weight (lbs)	32		36.77 resistivity x .0052 factor
Anode Diameter (feet)	0.46 see notes below		1.19 log value
Anode Length (feet)	1.64 see notes below		62.50 Horizontal anode resistance
2 time anode depth (feet)	20		86.46 Vertical anode resistance

Circuit Resistance Current Requirements					
Anode Resistance to Earth	plug in Resistance value	62.50	OHMS		
Driving Potential (V)		1.2	VOLTS		
Individual anode output		0.019	AMPS	Check	Between 0% and 25%
Number of anodes to be installed		4		-26.78%	Yes
Total circuit resistance		46.00	OHMS		
Current output of system		0.0261	AMPS		
Consumption Rate (lb/A-yr)		17.00			
Anode life based on anodes to be installed		144.31	YEARS	considers 50% anode efficiency	

Design conforms to the following standards:
National Association of Corrosion Engineers (NACE)
Standard Recommended Practice SP 0169 latest revision

CORROSION NACE SCOTT H. PAUL 4169 SPECIALIST

NOTES on anode dimensions:

Bare anode dimensions were considered due to the fact that the life of the anode is more dependent on the actual anode size than the packaging backfill.

The backfill may leech into surrounding earth as time progresses, which will cause depletion not related to the anode performance or cathodic protection mechanisms.

Other than erosion / leeching effects described above, the anode backfill is NOT consumable and will remain stable throughout the operational life of the anode.

Dwight's formula, utilized above, does not consider the inherent resistivity of the backfill.

For this reason, bare anode dimensions, when factored into the calculations, offer more conservative estimates as to the number of anodes required.

CorrTech Inc.	Task Order 023
Client	NYC DDC
Project	Queens, NY on Crescent St, 31st Ave, and 41st St.
Contract	QED 1014
Prepared	5/6/2016

Quantity and Cost Estimating

TOTAL-FURNISH AND INSTALL CATHODIC PROTECTION

Item No	Description	Quantity	Measure
1	32-pound high potential magnesium anodes	298	each
2	Stuart Steel Type S Splice Kit	152	each
3	AWG 8 HMWPE, Black (anode header cable)	5,960	feet
4	AWG 10 THWN, Red	8,720	feet
5	AWG 10 THWN, White	710	feet
6	AWG 10 THWN, Blue	710	feet
7	AWG 10 THWN, Green	5,060	feet
8	Thermite welds, CA-15	284	each
9	Copper-copper sulfate reference cells w/50-ft HMWPE 12 yellow (standard type)	40	each
10	Silver Chloride reference cells w/50-ft HMWPE 12 black (casing type)	32	each
11	Counter electrodes w/50-ft AWG 12 THWN Purple (standard type black tape for casing)	72	each
13	Burndy KS-17 Copper Split bolts (for anode splicing and test stations)	224	each
14	3M Supper 88- Black Electrical Tape (used wjth splice kit)	20	each
15	3M 130 C Rubber Tape (used with splice kit)	20	each
16	Cans 3M scotchkote electrical coating FD (used with splice kit)	8	each
17	Royston Handi-Caps (cover thermite weld)	284	each
18	Test station housing (NYC DEP Standard)	63	each
19	Acrylic Tags for Labeling Test Stations	63	sets

ATTACHMENT "A"

Typical Pipe Push Stops for Liner Pipe

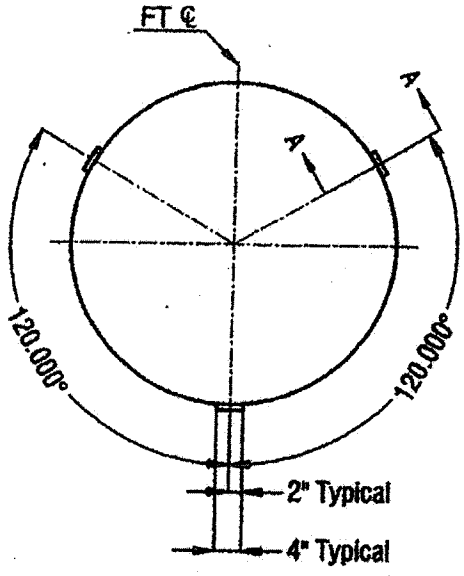

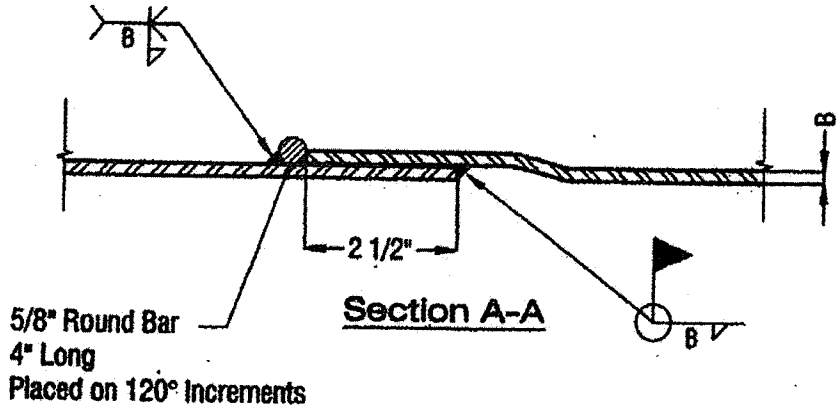

Section A-A

NOTES:
- All dimensions are in inches unless otherwise specifid.
- All fillet welds to be the size of the thinner of the two materials being welded.
- The Contractor shall submit shop drawings to the Engineer for approval.

HALCYON CONSTRUCTION CORPORATION

CONTRACTORS — ENGINEERS
65 MARBLE AVENUE
PLEASANTVILLE, NEW YORK 10570

TEL. 914-741-1112

June 13, 2016

Shermaine Manifold, Contract Manager, Contracts Unit
City of New York
Department of Design and Construction
30-30 Thomson Avenue – 1st Floor
Long Island City, New York 11101

Re.: NYCDDC Contract QED1014, Rehabilitation of Existing Trunk Water Mains in Crescent Street, Queens
Pre-Award Process

Per NYCDDC Pre Award Notification fax, Halcyon Construction Corporation hereby submits the following attached information for your review:

- Halcyon Construction Corp. corporate resume detailing contractor's management personnel, experience and equipment owned.
- Financial Information – marked in separate envelope with Project Reference Information.
- The last full Vendex submission date for Halcyon Construction was 12/23/2015, this was updated from our 5/07/2015 submission. I have attached a copy of the full Vendex submittal along with delivery confirmation to MOCS on 12/24/2015.
- Signed EEO statement and documents checked on page 3, question 20 of Construction Employment Report..
- Page 22 of Safety Questionnaire – Inserted year 2013 EMR rate as requested.
- Letter from Fairfield County Bank Insurance Services regarding year 2014 EMR rating.

If any additional information is required or if you have any questions with the above please do not hesitate to call.

Sincerely,
HALCYON CONSTRUCTION CORPORATION

Sal Leopoldo
Vice President

EQUAL EMPLOYMENT AND

AFFIRMATIVE ACTION PROGRAM

HALCYON CONSTRUCTION CORP.

AN EQUAL OPPORTUNITY EMPLOYER

TABLE OF CONTENTS

I. PURPOSE OF EQUAL EMPLOYMENT AND AFFIRMATIVE ACTION PLAN AND STATEMENT OF POLICIES:

A. Purpose of Plan:

The purpose of the Halcyon Construction Corp., Equal Employment Policy and Affirmative Action Plan is ensure that persons are recruited, hired, assigned and promoted without regard to race, ' religion, color, national origin, citizenship, sex, veteran's status, age or disability.

1. To achieve the equal treatment of minorities, women, covered veterans and individuals with disabilities at all levels and in all sectors of the workforce;

2. To ensure compliance with applicable federal, state and local equal employment laws and regulations.

3. To set forth steps to be taken at all Halcyon Construction Corp., locations to maintain the existence of equal employment opportunity and affirmative action policies throughout the Company.

B. Statement of Policies:

1. Equal Employment: Halcyon Construction Corp., will take steps to assures that "the treatment of all employees & applicants will be treated without regard to race, creed, color, national origin, sex, age, disability, marital status, sexual orientation, or citizenship status or any other protected characteristic in all employment decisions, including but not limited to recruitment, hiring, compensation, training & apprenticeship, promotion, upgrading, demotion, downgrading, transfer, lay-off & termination, & all other terms &conditions of employment".

2. Affirmative Action: Halcyon Construction Corp, President, and all officers of the Company will affirmatively implement the policies and procedures in this plan with regard to women, minorities, covered veterans, individuals with disabilities and other protected class individuals and will regard those policies and procedures as contract requirements.

II. DISSEMINATION OF THE PLAN AND POLICIES:

A. Internal: Halcyon Construction Corp's EEO Officer will communicate to all employees, including each executive, manager, supervisor, and foreman and nonsupervisory employee this Plan and its equal employment opportunity and affirmative action policies through following procedures:

1. .As appropriate, upon request, the Company will give to any employee a copy of this plan.

2. The existence, requirements, and goals of the Plan will be communicated to all employees, including supervisory employees, and employees responsible for hiring, periodically through internal publications by the EEO Officer. New employees will be educated by the EEO Officer about the existence, requirements and goals of the Plan within 30 days of hire. The EEO Officer will conduct meetings with supervisory employees and personnel office employees, before the beginning of construction work, regarding the existence, requirements and goals of the plan, prior to the beginning of construction work. These meetings will take plan at least every 6 months.

3. This Plan and its EEO and Affirmative Action Policies will be disseminated to all employees. The Company will ensure that a signed receipt, to acknowledge receipt and training/awareness of the Plan, has been provided, with an opportunity for a "Question and Answer" period.

4. A copy of the Equal Employment Opportunity/Affirmative Action policy statement will be given to all applicants for employment upon their request for an employment application.

5. Implementation of the Plan will be periodically discussed during management staff meetings.

6. Periodically, the Equal Opportunity Officer will meet with each manager and the manager's immediate staff to give them assistance in implementing the plan.

7. The Company's Equal Employment Opportunity/Affirmative Action policy will be displayed in conspicuous places where employees and applicants can view the policy.

B. External: Halcyon Construction Corp will communicate the Plan and the Statement of Policies to the public by the following procedures:

1. As appropriate, recruiting sources such as personnel agencies, community organizations, colleges and training institutes will be informed of, the Company's Equal Employment Opportunity/Affirmative Action policy. The Recruiting sources will be requested to refer qualified applicants, including minorities and females and other protected group members, persons in their referrals.

2. Advertisements for employment will be placed in news media chosen to reach all qualified applicants, including minorities, women, covered veterans, individuals with disabilities and other protected group members. All employment advertisements will contain the phrase "An Equal Opportunity Employer M/F/V/D." The Company will endeavor to, as appropriate, place a reasonable 'proportion of our help-wanted advertising in media directed to minorities and/or women and other protected group members.

3. The Company will, in all solicitations or advertisements for employees placed by or on behalf of the Company, state that all qualified applicants will receive consideration for employment without regard to race, color, religion, sex, national origin, handicap status; citizenship status, disability, age, sexual orientation, covered veteran status, marital status, and other protected characteristic.

4. The Company's recruitment and hiring practices will include:

   (a) The avoidance of any help-wanted advertising in segregated columns in newspapers or other publications

   (b) The avoidance in recruitment letters, or other materials or any reference to "male or "female" or any indication of preference for men or women in certain jobs.

5. Develop and/or participate in on the job training opportunities, upgrading and/or apprenticeship programs in the area for all employees, including minorities and females.

III. ADMINISTRATION:

A. RESPONSIBILITY: Halcyon Construction Corp., Board of Directors has overall responsibility for the policies included in the Plan. The President of the Company has the primary responsibility for the successful implementation of the Plan. The President has appointed Christine Gencarelli the Company's Equal Opportunity Officer with delegated responsibility for program planning, direction and operation.

B. DUTIES OF THE EQUAL OPPORTUNITY OFFICER:

1. Manages, coordinates, supervises and integrates day-to-day operations and activities in implementing the Plan at all offices of the Company:

2. Develops programs and policies for securing compliance at all Company locations with equal employment opportunity and affirmative action policies of the Company:

3. Reviews employment practices as required to determine whether any current policies serve to bar individuals with disabilities from employment:

4. Review all qualification requirements to assure that they are job related, consistent with job necessity and safe performance on the job:

5. Directs compliance reviews and investigations of complaints of discrimination:

6. Prepares and issues statistical data and evaluation of progress to measure the success of the program and to identify areas where minorities and women are underutilized.

IV. UTILIZATION AND WORKFORCE ANALYSIS:

A. UTILIZATION ANALYSIS:

The purpose of the utilization analysis is to identify job groups within the Company's workforce in which minorities and women are being underutilized. The utilization analysis will compare the representation of minorities and females within each of the Company's job groups to the percentage of minorities and women who are internally and externally available to fill positions in each job group.

In determining if minorities and women are underutilized in any of the Company's job groups, the Equal Opportunity Officer shall evaluate the following factors, as appropriate:

1 The percentage of minorities or women having requisite skills in the reasonable recruitment area in which the Company recruits;

2 The percentage of minorities or women among those promotable, t transferable and trainable within the organization with the requisite skills for the job classifications involved;

B. WORKFORCE ANALYSIS:

The Equal Opportunity Officer will develop an analysis of job titles and job classifications held by minorities and women which shall include a listing of each job title including the wage rate or salary range, as it appears on Company payroll records, ranked from the lowest paid to the highest paid within organizational unit and the total number of incumbents by sex and minority in each job title.

C. IDENTIFICATION OF PROBLEM AREAS:

The Equal Opportunity Officer will be responsible for the periodic analysis of the entire employment process in order to identify problem areas. Among the subjects covered will be:

1 The recruitment process;
2 Concentration of women and minorities in various job and job classifications;
3 Selection standards and procedures;
4 Transfer and promotion policies;
5 Administration and validity of all tests for employment and promotional purposes, if applicable;
6 Upward mobility systems, promotions, and training;
7 Terminations and disciplinary actions;

V. PLACEMENT GOALS:

Once the utilization analysis is established, the Company will set placement goals placement qualified minorities and women in job groups where goals have been established. The Company will use the following process in establishing goals:

1. A Goal will be established when the percentage of total minorities and/or woman in a particular job group is lower, to a statistically significant degree than the total percentage of minorities and women available both internally and externally to fill positions within in that job group.

2. The goal will be equal to the percentage of minorities and/or women available for work in the job group.

VI. EXECUTION OF THE EQUAL EMPLOYMENT OPPORTUNITY PROGRAM:

A. RECRUITMENT:

Halcyon Construction Corp. will actively seek qualified minorities, women veterans and individuals with. disabilities persons for employment. Employees will be encouraged to refer qualified candidates for employment, including qualified minorities and females, and other protected group members.

The following techniques will be used to ensure that personnel practices of the company are not discriminatory:

1. The Company will analyze and review recruitment procedures for each job title to identify and eliminate discriminatory barriers;

2. The Company will establish objective measures to analyze and monitor the recruitment process. These shall include: Applicant records, including for each job applicant; name race, sex, disabled status, covered veteran status, referral source, date of application, position applied for, and whether a job offer was made.

3. Prior to filling any position for which goals have been established, the Equal Opportunity Officer will review, as appropriate, the applications of applicants, including those of minorities and women applicants who applied for the position;

4. As appropriate, recruitment sources will be enlisted to ensure that the Company is making contact with recruitment sources that provide a diverse pool of qualified applicants. All personnel who are engaged in direct recruitment for the project will be instructed by the EEO Officer in the contractor's procedures for locating and hiring minority group employees. The Company will establish referral procedures with each recruitment source.

5. The Company's recruitment and hiring practices will include the avoidance in recruitment letters other materials or any reference to "male" or "female" or any indication of preference for men or women in certain jobs...unless women or protected groups are underutilized.

B SELECTION OF STANDARDS AND PROCEDURES:

1. Halcyon Construction Corp. will carefully review and evaluate every step of its hiring process to ensure that the job requirements, hiring standards, and methods of selection and placement do not discriminate, are job related and contribute toward the goals of this Plan.

2. Having identified handicap status, reasonable accommodation to the known physical or mental limitations of an otherwise qualified handicapped applicant will be made, unless it can be shown that such accommodation would impose an undue hardship on the Company.

C UPWARD MOBILITY, PROMOTIONS, TRAINING & WAGES:

In order to assure the absence of discrimination against the employment of minorities, women, covered veterans, individuals with disabilities and other protected group members, in all positions, Halcyon Construction Corp. will review all practices, both formal and informal, affecting promotions and training opportunities to ensure that all qualified employees, including minorities, women, covered veterans, individuals with disabilities and other protected group members, are promoted and given training opportunities, both on the job and through apprenticeship programs. Employees will be encouraged to take advantage of and pursue training and promotional opportunities.

The following records and procedures will be used, developed, and implemented in order to ensure compliance:

1. Periodically monitor the number and percentage of minorities, women covered veterans, individuals with disabilities and other protected group members, and handicapped persons who participate in the Company's training programs;

2. Employees will be informed of all job opportunities.

3. Halcyon Construction Corp. participates in, and will continue to participate in, training programs. Our participation includes, on-the-job training which provides the opportunity for trainees who successfully complete the program(s), to qualify for higher paying employment.

4. It is the practice of Halcyon Construction Corp. to assure that all of its personnel, receive the "Predetermined Minimum Wage", or higher and that all employees, including Mechanics and Laborers will be paid in compliance with over-time and other wage payment requirements.

5. The wage determination of the Secretary of Labor will be posted, at the work sites, in a prominent and accessible place.

D. LAYOFFS. DISCHARGE. DEMOTION. DISCIPLINARY ACTIONS & RECALLS:

The standards for deciding when an employee will be terminated recalled, demoted, or disciplined, will be the same for all employees of the Company and will not be applied differently for minorities, women, covered veterans and individuals with disabilities. The Company will keep a record of;

1. All terminations, indicating total, name, date, number of members of minority group, handicapped person and women by job category and reason for termination; and

2. All Layoffs and Demotions, indicating total, name, date, number of members of minority group, handicapped persons and women by job category and reasons for action.

3. Extended Personal Leave -An employee should make all requests for extended personal leave to their supervisor or department manager. Maternity leave requests will be unconditionally accepted upon receipt of proof of medical disability. In all cases of approved leave, the employee will be afforded the opportunity to be reinstated in the same or equivalent position at the same rate of pay.

VII. INVESTIGATIVE PROCESS OF ALLEGED DISCRIMINATION:

A. Who to notify:

Any individual associated with Halcyon Construction Corp., who believes that they have been discriminated against, are to report any and all allegations directly to:

Christine Gencarelli
Halcyon Construction Corp.
Corporate EEO Officer
65 Marble Avenue
Pleasantville, NY 10570
(914)741-1112 Ext. 10

B. Investigative Procedures, Determinations and Notifications:

Upon notification of an alleged act of discrimination, an investigation will be conducted promptly by the EEO Officer. The investigation process Will include and may not be limited to the following:

- An opportunity for both the alleged victim and the accused' to report their account' of all allegations
- The EEO Officer may, when applicable, also take statements from anyone claiming to have witnessed any alleged acts of discrimination.
- All parties involved will be notified, in writing, by the EEO Officer of the final determination and course of disciplinary action, if applicable, to include immediate termination of all those proven to have committed an act of discrimination. Involved parties will also be made aware of the course of appeal available.

VIII. RECORDS AND REPORTS:

Halcyon Construction Corp. will periodically monitor appropriate personnel records and reports to ensure its policy of equal employment opportunity is being carried out, and that the Company is making good faith efforts to achieve its stated goals.

Halcyon Construction Corp. Will develop and implement a reporting procedure that will provide for the continued auditing, monitoring, and evaluation of Company offices. .

Halcyon Construction Corp. will also retain, the records listed below, to document compliance with EEO requirements. These records will be retained for a three year period following the completion of contract work. All records will be made available for inspection throughout this period.

Retained Documents:

- The number of Minority and non-minority group members and women employed in each work classification on the project;
- The progress and efforts being made in locating, hiring, training, qualifying and upgrading minority and female employees; and
- The progress and efforts being made in securing the services of DBE subcontractors or subcontractors with meaningful minority and female representation among their employees.
- Halcyon Construction Corp. will submit all on-the-job reports, when required.

IX. SUBCONTRACTORS SERVICES:

Halcyon Construction Corp. recognizes its responsibilities in the areas of equal opportunity and affirmative action with respect to subcontractors, consultants, and companies that supply materials and services to our Company. The Equal Opportunity Officer will develop and implement policies and procedures to ensure that those responsibilities are being met. whether as part of their contract or pursuant to any Federal and/or State funded projects, as applicable.

A. UTILIZATION OF DISADVANTAGED BUSINESS ENTERPRISES

It is the policy of Halcyon Construction Corp. that disadvantaged business enterprises shall have the maximum practicable opportunity to participate in the performance of this Contract.

1. Halcyon Construction Corp. will establish policies and procedures that will enable disadvantaged business enterprises to be considered fairly as subcontractors and suppliers under City, State and Federal contracts. In this connection:

(a) The Company will develop and implement policies and procedures to recruit and give equal consideration to women and disadvantaged firms and consultants to provide personal services or supplies to the Company. The Company will not discriminate in selecting and retaining subcontractors, material suppliers and lessors of equipment. The Company will periodically notify its subcontractors, suppliers and lessors of the Company's Equal Employment Opportunity/Affirmative Action policy. These entities will be asked .to abide by this policy.

(b) The Company will develop a listing of women and disadvantaged firms and consultants that provide services for which the Company normally contracts;

(c) The Equal Opportunity Officer will periodically review and monitor the Company's use of subcontractors, suppliers consultants and 'services in order to assure fair use consideration and treatment of women and disadvantaged suppliers, subcontractors, consultant .and services;

(d) The Company will notify all subcontractors and suppliers that its affirmative action plan is on file and that their affirmative action plans must also be filed with the contracting City Agency at or prior to the bidding on the contract;

(e) The Company will endeavor .to cause non-discrimination clauses in collective bargaining agreements and to endeavor to discovery any present discriminatory provisions in said agreements and to modify and delete same;

(f) When the Company contemplates subcontracting activities a good faith effort will be made to utilize disadvantaged firms or subcontractors.

(g) Halcyon Construction Corp. will not use a facility or 'any portion thereof that segregates because of race, religion, color, age, national, origin citizen status, disability, sexual orientation, marital status, sex or other protected characteristic. Further, the Company will not sponsor, endorse, or contribute to any association or establishment that excludes minorities, women, covered veterans, individuals with disabilities and other protected members. Halcyon Construction Corp. will conduct periodic inspections of project sites to ensure that working conditions and employee facilities do not indicate discriminatory treatment of project site personnel.

X. STATEMENT OF COMMITMENT

It is the policy of Halcyon Construction Corp. to provide equal employment opportunity in all employment practices including but not limited to recruitment, advertising, hiring, layoff, recalls, rate of. pay, training, termination, upgrading, demotion, transfer, fringe benefits and use of facilities; without discrimination because of race, color, sex, age, religion, national origin, citizen status, disability, sexual orientation, marital status, or other protected characteristic. This Plan will be updated and revised to reflect experience, changes in laws and regulations ,and better understanding of effective approaches that will assure equal employment opportunities for all.

_____

EQUAL OPPORTUNITY OFFICER

_____

DATE

AN EQUAL OPPORTUNITY EMPLOYER

HALCYON CONSTRUCTION CORP.

EMPLOYEE HANDBOOK

AND

BENEFITS GUIDE

TABLE OF CONTENTS

TABLE OF CONTENTS (cont.)

WELCOME TO HALCYON CONSTRUCTION CORP.

We have always emphasized that outstanding people are the key to our success. Through the efforts of our people Halcyon Construction Corp. is fast becoming a leader in the construction industry. To ensure continued success, we feel it is important that all employees understand our policies and procedures. This employee handbook will familiarize you with the various aspects of working with Halcyon Construction Corp.. I encourage you to use it as a valuable resource for understanding the company. We feel it will also be a useful reference document for all employees. If you have any questions, please do not hesitate to ask them of either your supervisor or any member of the management team.

My best wishes to you and thank you for taking this first step in knowing your company.

_____

Charles A. Casarella
President

I - OVERVIEW

INTRODUCTION

Our policies, practices and benefits are continuously reviewed for updating and we expect to change them from time to time. Therefore, you should always check with your manager or supervisor for the most current ones. Company benefit plans are defined in legal documents such as insurance contracts, official plan texts and trust agreements. This means that if a question ever arises about the nature and extent of plan benefits or if there is conflicting language, the formal language of the plan documents govern, not the informal wording of this handbook. Plan documents are available for your inspection in your manager's office.

ETHICAL STANDARDSCONFLICT OF INTEREST

Halcyon Construction Corp. has an excellent reputation for conducting its business activities with integrity, fairness, and in accordance with the highest ethical standards. As an employee you are obligated to uphold that reputation in every business activity. If you are ever in doubt whether an activity meets our ethical standards or compromises the Company's reputation, please discuss it with your manager or supervisor.

OPEN DOOR POLICY

Employees are encouraged to share their concerns, seek information, provide input, and resolve problemsissues through their immediate management, and as appropriate, consult with any member of management toward those ends. Managers and supervisors are expected to listen to employee concerns, to encourage their input, and to seek resolution to their problemsissues.

SUGGESTIONS

If you have any suggestions or ideas that you feel would benefit Halcyon Construction Corp., we would encourage you to tell us about them. We are always looking for suggestions that improve methods, procedures and working conditions, reduce costs or errors, and benefit the Company and its employees.

II - POLICIES

EQUAL EMPLOYMENT OPPORTUNITY

Halcyon Construction Corp. maintains a strong policy of equal employment opportunity. We ensure equal opportunity for all employees and applicants for employment. We hire, train, promote, compensate and dismiss employees without regard for race, creed, color, religion, sex, sexual orientation, national origin, age over 40, marital or veteran status, disability or citizenship, as well as other classifications protected by applicable federal, state or local laws.

Our equal employment opportunity philosophy applies to all aspects of employment with Halcyon Construction Corp. including recruiting, hiring, training, transfer, promotion, job benefits, pay, dismissal, educational assistance, and social and recreational activities.

HARASSMENT

It is illegal to harass others on the basis of their sex, age over 40, race, creed, color, national origin, religion, marital or veteran status, Sexual Orientation, citizenship, disability and other personal characteristics. Harassment includes making derogatory remarks about such characteristics, making "jokes" about ethnic or other groups, and other verbal, physical and visual behavior.

Sexual harassment is also prohibited. Propositions, repeated requests for dates, dirty jokes, sexually provocative pictures and other verbal, physical and visual harassment are prohibited.

The harassment of another employee by an employee will lead to disciplinary action, up to and including immediate termination in cases of gross misconduct.

COMPLAINT PROCEDURE

Any employee who feels harassed or discriminated against has the right to file a charge with the Equal Employment Opportunity Commission of the Division of Human Rights, and in some states with a state agency. Before doing so, the procedure the employee should follow would be to speak first with the Site EEO Officer, the Corporate EEO Administrator, Christine Gencarelli in the main office (914)741-1112 or his or her supervisor, or if the supervisor is not appropriate, to the next level supervisor, the office manager, owner or anyone else in management, in an attempt to reach resolution. It is the manager's duty to listen to such complaints and to refer them to the appropriate authority.

Once a complaint has been filed, the corporate EEO Administrator, Christine Gencarelli, will conduct interviews, speak with witnesses and assist in investigating complaints to come to a resolution. All complaints will be handled with strict confidentiality. We will make every effort to resolve any and all conflicts within 48 hours.

JOB CLASSIFICATIONS

Halcyon Construction Corp. places employees into one of two classifications, based on grade level and position, consistent with the Fair Labor Standards Act and applicable state law.

Exempt employees hold executive, administrative, and professional positions. Exempt employees are not eligible for overtime pay.

All other employees are non-exempt. Non-exempt employees are eligible for overtime pay.

COMPENSATION POLICIES

PAY PERIOD

For all employees the standard pay period is weekly (five working days).

When a payday falls on a weekend or holiday, paychecks will be distributed on the last working day prior to the holiday.

Time sheets must be submitted no later than 9 o'clock Monday morning.

WORK SCHEDULE

The standard workweek is five days. The standard workday is 8 hours. The standard work hours are from 8:00 a.m. to 5:00 p.m. The workweek commences on Sunday morning and ends the following Saturday evening. Paychecks are delivered at the close of business each Thursday.

The lunch period for all employees is one hour., to be taken between the hours of 12 noon and 2 o'clock. The scheduled lunch hour will be determined by the needs of the individual department.

PAYROLL DEDUCTIONS

Your earnings and payroll deductions are shown on a voucher with your check. Deductions required or requested are as follows:

As Required by : Federal, State and Local Tax Laws:

Federal Income Tax
State Income Tax
Local Income Tax (if applicable)
Social Security Tax
State Disability Insurance
GarnishmentsWage Attachments
Dependent Health Care Coverage Premium (if applicable)

Any questions about your paycheck should be directed to your manager or supervisor.

OVERTIME

Our intent is to compensate overtime in accordance with Federal and State law. An attempt will be made to plan overtime with consideration for employees and customers.

Only non-exempt employees are eligible for overtime pay. Non-exempt employees must receive advance authorization from the supervisor or manager to work beyond the standard workday. Non-exempt employees will be compensated for all authorized work in excess of the standard workday.

The compensation for overtime is one-and-one-half times the regular rate of pay depending upon applicable laws.

PAY INCREASES

Salary increases are based on merit, business conditions or other factors. Most pay increases will be based upon a performance appraisal and will take effect at the beginning of the next pay period.

WAGE GARNISHMENT

Garnishment of wages results when an unpaid creditor has taken the matter to court. A garnishment is legal permission for creditors to collect part of an employee's pay directly from Halcyon Construction Corp.. Although Halcyon Construction Corp. does not wish to become involved in an employee's private matters, we are compelled by law to administer the court's orders.

In doing so, a supervisor will contact the employee to explain the details of garnishment and how it affects wages. The possibility of resolving the situation before turning it over to implementation will also be explored. Employees are encouraged to resolve these matters privately to avoid Halcyon Construction Corp.'s involvement in this mutually unpleasant situation.

DIRECT DEPOSIT

At this time, Halcyon Construction Corp. is offers its employees direct deposit of their paychecks into their bank or credit union.

UNACCEPTABLE JOB PERFORMANCEDISCIPLINARY ACTION

The principle objective of any disciplinary action shall be to improve performance and efficiency of the employee. Any action by an employee which reflects discredit on Halcyon Construction Corp., or is a direct hindrance to the effective performance of the employee's job functions, constitutes improper employee conduct and shall be considered cause for disciplinary action or dismissal if the action is of such serious nature.

EMPLOYEE GRIEVANCE PROCEDURE

As a matter of general policy, your supervisors at all levels, will provide an open door policy and a receptive ear for the discussion and review of employee grievances concerning conditions of employment.

SEVERANCE ALLOWANCE

At its discretion, Halcyon Construction Corp. may pay a severance allowance to salaried employees if they are terminated due to:

- a reduction in Halcyon Construction Corp. workforce
- elimination of their job or position

The severance allowance may be paid as part of or in addition to any payments required by law. Those time employees, deemed entitled to severance pay, are paid in accordance with the following schedule:

Length of Service	Amount of Pay
0-12 Months	None
12-24 Months	1 Week
2 Years or More	2 Weeks

Such severance pay will be paid in a lump sum at the time of termination.

INTRODUCTORY PERIOD NEW EMPLOYEES

Full-time employees newly hired are subject to a 90-day introductory period.

The designation of this time frame does not constitute an obligation on the part of Halcyon Construction Corp. to retain the employee until the end of the period specified. During this time, or at any time during employment, either Halcyon Construction Corp. or the employee may terminate the working relationship without cause and without advance notice. At the end of the 90 days, the supervisor may extend the period for additional time at his or her discretion.

Full-time employees are eligible for benefits during the introductory period but may not use accrued paid time off. See section III of this handbook for further information.

EMPLOYMENT OF RELATIVES

Halcyon Construction Corp. has no prohibition against hiring relatives. However, one general restriction has been established to help assure fair treatment of all employees.

While we accept and consider applications for employment from relatives, close family members such as parents, children, spouses or in-laws will not be hired into or transferred into positions where they directly or indirectly supervise or are supervised by another family member.

COMPANY RULES AND REGULATIONS

OVERVIEW

Every organization has certain guidelines, which were developed to reflect good business practices. In establishing any rules of conduct, Halcyon Construction Corp. has no intention of restricting the personal rights of any individual. Rather, we wish to define the guidelines that protect the rights of all employees and to ensure maximum understanding and cooperation. Therefore, employees are expected to be:

- On-time and alert when scheduled to be at work.
- Careful and conscientious in performance of duties.
- Thoughtful and considerate of other people.
- Courteous and helpful, both when dealing with customers and with other employees.

ABSENTEEISM AND TARDINESS

Halcyon Construction Corp. expects employees to be at work on time and to work a full 8 hours. An employee who will be absent from work for any reason must call the Human Resources Department within 30 minutes of the start time of that day. Repeated absenteeism andor tardiness may lead to disciplinary action up to and including termination.

SAFETY

Halcyon Construction Corp. expects its employees to conduct themselves in a safe manner. Use good judgement and common sense in matters of safety, observe any safety rules posted in various areas, and follow all OSHA and state safety regulations.

SUBSTANCE ABUSE

Halcyon Construction Corp. will not tolerate any substance abuse on its premises. Any employee reporting for work under the influence of alcohol or drugs will be asked to leave immediately. Under these circumstances, assistance will be provided to ensure that the employee arrives home safely. Any employee who repeatedly reports to work under the influence of alcohol or drugs may have hisher employment terminated immediately.

CONSIDERATION FOR SMOKERS AND NONSMOKERS

Employees are requested to confine smoking to designated smoking areas, if such an area is available. Smokers are further requested to have consideration for their non-smoking co-workers. Where local ordinances are in effect, they will be observed.

OFFICE DRESS CODE

You should dress in a professional and businesslike manner. All employees should practice common sense rules of neatness, good taste and comfort. All male employees are expected to be clean-shaven or to have a neatly trimmed beard or moustache. All female employees are expected to refrain from wearing tight fitting or provocative clothing. Our company's image will be greatly influenced by your professional and courteous manner and your businesslike appearance. Clean, modest clothing will always be appropriate. When in doubt, it is better to be dressed conservatively, or overdressed, then to be dressed too casually.

Fridays are a company designated casual dress day. However, in case you have some questions, hear are some examples of ***unacceptable*** dress down attire.

- Tank tops
- Shorts
- Beach Attire – such as flip-flops
- Jogging Suits and or sweat pants
- Jeans with holes
- Bare midriff (exposed navels, pierced or not, are forbidden)

If you have any questions, please ask your supervisor or the Manager of Human Resources for guidance.

OUTSIDE EMPLOYMENT

Halcyon Construction Corp. does not limit an employee's activities during non-working hours unless those activities interfere with or are in conflict with the performance of his/her job, or create a conflict of interest.

TERMINATIONS

We hope to retain good employees. However, employment at Halcyon Construction Corp. is for no specified time, regardless of length of service. Just as you are free to leave for any reason, we reserve the same right to end our relationship with you at any time, with or without notice, for any reason not prohibited by law.

When an employee wishes to resign because of illness or for personal reasons, the possibility of a leave of absence may be explored if the employee has a good work record and has sufficient length of service.

The employee is requested to give at least two weeks notice before voluntarily terminating employment.

PROPRIETARY INFORMATION CONFIDENTIALITY

Halcyon Construction Corp. has developed certain procedures and processes that are unique to Halcyon Construction Corp.. Keeping such information from competitors plays an important part in our success.

Employee understands that hisher employment by Halcyon Construction Corp. will result in hisher learning such confidential andor proprietary information, which heshe is bound not to reveal or otherwise to use in violation of the covenant not to compete that is a part of this contract.

Halcyon Construction Corp. protects its confidential andor proprietary information by restricting employee and visitor access to certain designated Halcyon Construction Corp. areas and documents to only those who have business reasons for access. An employee who divulges confidential andor proprietary information may be immediately terminated.

NON-DISCLOSURE NON-COMPETE

During Employee's employment by Halcyon Construction Corp. and for 730 days after the termination of employment:

(a) Employees will not share trade secrets, confidential andor proprietary information directly or indirectly with any construction business that competes with Halcyon Construction Corp. in any state where it does business.

(b) Employee will use Employer's confidential andor proprietary information only within the scope of

his/her duties as Employee of Halcyon Construction Corp.\.

(b) Employee will not disclose confidential andor proprietary information to any third parties not authorized by Halcyon Construction Corp. to receive it.

Upon termination of employment, Employee will promptly return to Halcyon Construction Corp. all documents in hisher possession that contain or relate to confidential and or proprietary information.

COMPANY PROPERTY

Upon termination of employment by either the Company or the employee, all property belonging to Halcyon Construction Corp., must be returned immediately. Any monies due the employee will be held until all Company property is returned.

All passwords and codes (telephone, computer, etc.) are to be registered with the Human Resources Department. Please advise Human Resources of any changes made to these passwords or codes.

PROTECTION OF HALCYON CONSTRUCTION CORP. & EMPLOYEE PROPERTY

Respect and protection of Halcyon Construction Corp. property and employee personal property is everyone's concern. If you find property missing or damaged, report it to your supervisor immediately.

RELEASE OF INFORMATION

Except for records and information that we are legally required to provide to government agencies, no information about you will be released unless there is a signed authorization form from you on file, and the request is in writing.

SECURITY LOSS PREVENTION

Halcyon Construction Corp. has installed and maintains an elaborate security system to protect the premises from fire, unlawful entry, and theft. The details of this system are available from your supervisor.

Employees are encouraged to assist management in ensuring that the system is not compromised in any way, shape or form. Tampering with the system, violating procedures or revealing the system to others may result in immediate termination.

PERSONNEL FILES

Halcyon Construction Corp. maintains up-to-date personnel files on all employees. It is important to keep your records timely because this information is used for benefit administration, continued insurance notices under COBRA, notification in case of emergency, etc. We respect your right to have the information on your records treated confidentially.

Contact the Human Resource Department if there are any changes in your:

- o home address
- o telephone number
- o emergency contact
- o marital status
- o number of dependents
- o military status

You may review your personnel file by contacting the Human Resource Department and arranging a time to do so.

TELEPHONE USE

Telephones are a vital part of our business since much of our business is handled on the phone. Personal use of the telephone should be limited to emergencies and unusual circumstances. Also, personal calls should be brief. Personal long distance calls not billed to the employee may not be made without maintaining accurate records and reimbursing Halcyon Construction Corp. for the cost of the call.

SOLICITATIONS & DISTRIBUTIONS

Employees must not solicit other employees for any purpose during working time. This does not include break or meal times. Our employees are not permitted to distribute literature of any kind at any time in work areas.

People who don't work for Halcyon Construction Corp. or who are not approved vendors are prohibited from distributing literature of any kind or soliciting employees for any purpose at any time on Halcyon Construction Corp. property.

EXIT INTERVIEWS

Exit interviews are encouraged upon termination of employment, regardless of reason. You or your supervisor may schedule an appointment with the Benefits Plan Administrator for an interview. At this time you may openly address any concerns you have regarding insurance and benefits, and any other pertinent issues.

III – COMPANY BENEFITS

PAID TIME OFF

All full-time employees are eligible for paid time off (PTO). Temporary employees and part-time employees working less than 1000 hours per year are not eligible for PTO.

The PTO schedule is as follows:

PTO time will be accumulated against hours worked based upon 17 allowable PTO days per year and an anticipated 1880 hours worked per year. Therefore, an employee will be entitled to a full PTO day for each 110 hours previously worked.

Paid holidays, PTO and overtime will not count as hours worked.

PTO may be taken at any time during the year, except that they must be scheduled to avoid conflicts with other employees' PTO and with busy periods of the year. Specific PTO dates must be approved by the employee's supervisor at least 30 days prior to the anticipated PTO.

PTO days may be carried over to April 30th of the following year. Financial compensation is not provided in lieu of PTO. You need time away form the office to rest, relax, and refresh your mind, and Halcyon Construction Corp. wants you to take the time.

If employment is terminated, either by the employer or the employee, employees will receive accrued PTO pay.

Employees who, upon resigning, give less than two weeks notice are not entitled to compensation for unused PTO days.

HOLIDAYS

Full-time and part-time employees working at least 1000 hours per year are eligible for holiday pay.

The following paid holidays will be observed:

New Year's Day	Labor Day
President's Day	Columbus Day
Memorial Day	Independence Day
Election Day (Presidential Only)	Thanksgiving Day
Christmas Day	

Employees may not elect financial compensation in lieu of taking time off for a holiday. If an exempt employee is requested to work a holiday, an alternate day off will be allowed in lieu of taking the holiday. If a non-exempt employee is requested to work on a holiday, heshe will be paid at the applicable overtime rate.

If a holiday falls on a weekend, the holiday will be observed on the closest Friday or Monday.

LEAVES OF ABSENCE

A leave of absence is an extended period of time absent from work without loss of employment. Leave of absence is without pay. During the first 30 days of a leave of absence Halcyon Construction Corp. continues to pay Halcyon Construction Corp. paid benefits; the employee must pay premiums for dependent coverage in advance to Halcyon Construction Corp..

A written request for a leave of absence, providing full explanation of the circumstances, must be presented to the employee's immediate supervisor at least two weeks before the start date of the leave of absence. Failure to report to work on the first day after the expiration of the leave of absence, without approval, will be considered a voluntary termination of employment.

PERSONAL LEAVE OF ABSENCE

Halcyon Construction Corp. has a policy of granting personal leaves of absence in a few exceptional cases. A personal leave of absence may be granted by Halcyon Construction Corp. up to a maximum of 30 days without pay. An extension beyond 30 days will be considered in the event of serious or extenuating circumstances.

DISABILITY LEAVE OF ABSENCE

Halcyon Construction Corp. will grant a leave of absence without pay for medical disabilities, including pregnancy disability, for a period not to exceed three months. When the employee returns to work, he or she will be reinstated in the same or substantially similar position.

MATERNITY LEAVE OF ABSENCE

Maternity leave for any full-time employee who is giving birth is comprised of a disability period of 6 to 8 weeks, during which the employee is eligible for disability compensation from their state and an unpaid period of an additional 6 weeks. Additional unpaid leave may be granted in certain circumstances.

MILITARY LEAVE OF ABSENCE

An employee who is drafted for service in the armed forces is eligible for military leave of absence. If the employee applies within 90 days of return from service, the employee will be eligible for re-employment and will be reinstated in the same or substantially similar position, unless no longer qualified for the position.

An employee who is a member of the Armed Forces Reserve or the National Guard and who is required to attend annual active duty for training or other short-term (2 weeks or less) reserve or Guard duty (i.e. forest fire fighting, police duty for natural disaster, etc.) is eligible for a military leave of absence. Such time off will not be considered vacation time. If the employee's military pay for the training is less than hisher average Halcyon

Construction Corp. earnings for a like period Halcyon Construction Corp. will pay the difference to the employee for a period not exceeding two (2) weeks.

JURY DUTY LEAVE OF ABSENCE

Halcyon Construction Corp. policy is not to discourage employees to serve on jury panels. An employee should inquire about the duration of the jury trial in advance of accepting such service.

Halcyon Construction Corp. will pay the difference between your regular earnings and the fee you receive for jury service, if required by applicable laws. Please contact your supervisor promptly after receiving notification to appear. If possible, Halcyon Construction Corp. will assist the employee in obtaining a deferment from jury service.

WITNESS DUTY LEAVE OF ABSENCE

Halcyon Construction Corp. is aware that employees may be subpoenaed to appear as witnesses in trials before the court. In these cases Halcyon Construction Corp. will grant time off with pay not to exceed two (2) days. After two (2) days, time off will be given as needed without pay or be given with pay if required by law.

BEREAVEMENT LEAVE OF ABSENCE

In the event of a death in your immediate family, you may have time needed up to three working days, with pay, to handle family affairs and attend the funeral. "Immediate family" is defined as: father, mother, sister, brother, spouse, child, grandparents, grandchildren, nieces, nephews, in-laws of the same degree, and domestic partners. If additional time is required, the situation should be discussed with the department manager.

VOTING

Halcyon Construction Corp. policy is to encourage its employees to participate in the election of government leaders. Therefore, if the employee will be unable to vote, adequate time off is allowed from the beginning or end of the workday to exercise this right. The employee may wish to inquire of their Registrar of Voters about the possibility of voting by absentee ballot.

Please be sure to schedule time off with your supervisor in advance.

GROUP INSURANCE

MEDICAL INSURANCE

All full-time employees are eligible for medical insurance. Temporary and part-time employees working less than 1000 hours per year are not eligible on Halcyon Construction Corp. plan. Benefits begin after a 30-day waiting period.

The medical plan is contributory by the employee and paid through a weekly payroll pretax deduction. Beginning June 01, 2010, the portion paid by the employee is based on a base amount, plus 50% of any annual increases imposed by the insurance carrier.

This Medical Plan was selected to ensure the employees are not burdened with extreme medical costs. This very comprehensive policy was developed for the benefit of all full-time employees. Please schedule medical appointments for early morning or late afternoon.

DENTAL INSURANCE

All full-time employees are eligible for dental insurance. Temporary and part-time employees working less than 1000 hours per year are not eligible on Halcyon Construction Corp. plan. Benefits begin after a 30-day waiting period.

The cost for dental insurance is paid 100% by Halcyon Construction Corp.. Cost of dependent medical coverage will be at the employee's expense, paid through a weekly payroll deduction.

This Dental Plan was selected to ensure that employees are not burdened with extreme dental costs. The intention of this benefit is to encourage employees to take preventive dental care. Please schedule dental appointments for early morning or late afternoon.

WORKERS COMPENSATION

All injuries incurred on the job must be reported to the supervisor IMMEDIATELY.

An employee injured on the job will be paid through the end of the workday in which the injury took place. After that, the employee will be eligible for workers compensation benefits.
Halcyon Construction Corp. and its insurance carrier shall not be responsible for the payment of Workers Compensation benefits for any injury which arises out of an employee's voluntary participation in any off-duty recreational, social or athletic activity which is not part of the employee's work- related duties.

Halcyon Construction Corp. and its insurance carrier shall be responsible for the payment of Workers Compensation benefits when the injury is the result of any recreational, social or athletic activity which is a reasonable expectancy or is required by Halcyon Construction Corp..

There are currently no such activities requiring your participation. If and when there are, you will be so notified.

EMPLOYEE DEVELOPMENT

SEMINARS

Seminars are typically paid 100% by Halcyon Construction Corp. when job related or required by certain contracts.

ADDENDUM I

Halcyon Construction Corp. Employee Handbook is intended to give you a general overview of Halcyon Construction Corp. and information regarding policies and benefits. Because we operate in a dynamic industry, some policies and benefit programs currently in effect may be revised, suspended, or eliminated by Halcyon Construction Corp. in response to business needs or changing legal requirements. These changes will be in writing.

ADDENDUM II

Halcyon Construction Corp., Inc.. will not discriminate against any employee of applicant for employment because of race, color, creed, Disability, age, Marital Status, Sexual Orientation, citizenship status, religion, sex or national origin. Halcyon Construction Corp., will take affirmative action to ensure that applicants are employed, and that employees are treated during employment, with out regard to their race, color, creed, Disability, age, Marital Status, Sexual Orientation, citizenship status, religion, sex or national origin. Such action shall include, but not be limited to the following: Employment, upgrading, demotion, or transfer, recruitment or recruitment advertising; layoff or termination; rates of pay or other forms of compensation; and selection for training, including apprenticeship. Halcyon Construction Corp., Inc.. agrees to post in conspicuous places, available to employees and applicants for employment, notices to be provided by the contracting officer setting forth the provisions of this non-discrimination clause.

ADDENDUM III

INVITATION TO IDENTIFY FOR APPLICANTS & EMPLOYEES

Halcyon Construction Corp. is a government contractor subject to Section 503 of the Rehabilitation Act of 1973, as amended, which requires government contractors to take affirmative to employ and advance in employment qualified handicapped individuals. If you have such a handicap and would like to be considered under the affirmative action program, please tell us. Submission of this information is voluntary and refusal to provide it will not subject you to discharge or disciplinary treatment. Information obtained concerning individuals shall be kept confidential, except that (i) supervisors or managers may be informed regarding restrictions on the work of duties of handicapped individuals, and regarding necessary accommodations, (ii) first aid and safety personnel may be informed, when and to the extent appropriate, if the condition might require emergency treatment, and (iii) government officials investigating compliance with the Act shall be informed.

If you are handicapped, we would like to include you under the affirmative action program. It would assist us if you tell us about (1) any special methods, skills and procedures which qualify you for positions that you might not otherwise be able to do because of your handicap, so that you will be considered for any positions of that kind, and (2) the accommodations which we could make which would enable you to perform the job properly and safely, including special equipment, changes in the physical layout of the job, elimination of certain duties relating to the job, or other accommodations.

ADDENDUM IV

EQUAL EMPLOYMENT OPPORTUNITY STATEMENT

Equal Employment Opportunity at Halcyon Construction Corp. is defined as the treatment of all employees and applicants for employment without unlawful discrimination as to race, creed, color, national origin, sex, age, disability, marital status, sexual orientation or citizenship status in all employment decisions, including but not limited to recruitment, hiring, compensation, training and apprenticeship, promotion, upgrading, demotion, downgrading, transfer, lay-off and termination, and all other terms and conditions of employment.

It is the policy of Halcyon Construction Corp. not to discriminate against any employee of applicant for employment because of race, creed, color, national origin, sex, age, disability, marital status, sexual orientation of citizenship status. We will take specific action to ensure that applicants are employed and that employees are treated during employment, without regard to their race, creed, color, national origin, sex, age, disability, marital status, sexual orientation or citizenship status. Such action shall include, but not be limited to the following: recruitment, hiring, compensation, training and apprenticeship, promotion, upgrading, demotion, downgrading, transfer, lay-off, and termination, and all other Terms and Conditions of Employment except as provided by law.

Christine Gencarelli has been appointed Director of our equal opportunity programs and will report directly to me on the results of such programs. As Director of Halcyon Construction Corp. equal opportunity programs, her responsibilities include:

I. Developing policy statements, equal employment programs, Internal and external communication techniques and programs;

II. Assisting in the identification of problem areas;

III. Assisting line management in arriving at solutions to problems;

IV. Designing and implementing audit and reporting systems that will:

A. Measure effectiveness of the policy and implementing programs including supervisors' and managements' adherence to the equal employment opportunity policy;

B. Indicate need for remedial action; and

C. Determine the degree to which the equal employment objectives have been met.

V. Serve as liaison between the company and enforcement agencies.

VI. Serve as a liaison between the company and minority organizations, women's organizations, and advocate organizations for other protected groups and community action group concerned with equal employment opportunity.

To ensure adherence to this policy, performance evaluations for supervisory personnel shall include ratings on their equal employment opportunity efforts and results.

Additionally, in furtherance to our equal employment opportunity commitment Halcyon Construction Corp. shall insist that labor unions and other recruiting sources actively recruit and refer members of all protected groups for all positions; incorporate non-discriminatory provisions in all its contracts and purchase orders and include the EEO logo, slogan or statement in all solicitations or advertisements for employees.

ADOPTION AGREEMENT FOR ALTIGRO PENSION SERVICES, INC. VOLUME SUBMITTER 401(K) PROFIT SHARING PLAN

CAUTION: Failure to properly fill out this Adoption Agreement may result in disqualification of the Plan.

EMPLOYER INFORMATION

(An amendment to the Adoption Agreement is not needed solely to reflect a change in this Employer Information Section.)

1. EMPLOYER'S NAME, ADDRESS, TELEPHONE NUMBER, TIN AND FISCAL YEAR

Name: Halcyon Construction Corporation

Address: 65 Marble Avenue
Street

Pleasantville (City) New York (State) 10570 (Zip)

Telephone: (914) 741-1112

Taxpayer Identification Number (TIN): 13-2995431

Employer's Fiscal Year ends: December 31st

2. TYPE OF ENTITY

a. [X] Corporation (including tax-exempt or non-profit Corporation)
b. [ ] Professional Service Corporation
c. [ ] S Corporation
d. [ ] Limited Liability Company that is taxed as:
   1. [ ] a partnership or sole proprietorship
   2. [ ] a Corporation
   3. [ ] an S Corporation
e. [ ] Sole Proprietorship
f. [ ] Partnership (including limited liability)
g. [ ] Other: _____ (must be a legal entity recognized under federal income tax laws)

3. AFFILIATED EMPLOYERS/PARTICIPATING EMPLOYERS (Plan Sections 1.7 and 1.61). Is the Employer an Affiliated Employer (i.e., a member of a controlled group or an affiliated service group (within the meaning of Code §414(b), (c), (m) or (o)))?

a. [X] No
b. [ ] Yes, the Employer is a member of (select one or both of 1. - 2. AND select one of 3. - 4. below):
   1. [ ] A controlled group
   2. [ ] An affiliated service group

   AND, will any of the Affiliated Employers adopt the Plan as Participating Employers?
   3. [ ] Yes (Complete a participation agreement for each Participating Employer.)
   4. [ ] No (The Plan could fail to satisfy the Code §410(b) coverage rules.)

MULTIPLE EMPLOYER PLAN (Plan Article XIV). Will any Employers who are not Affiliated Employers adopt this Plan as part of a multiple employer plan (MEP) arrangement?

c. [X] No
d. [ ] Yes (Complete a participation agreement for each Participating Employer.)

PLAN INFORMATION

(An amendment to the Adoption Agreement is not needed solely to reflect a change in the information in Questions 9. through 11.)

4. PLAN NAME:

Halcyon Construction Corporation 401(k) Profit Sharing Plan

5. PLAN STATUS
   a. [X] New Plan
   b. [ ] Amendment and restatement of existing Plan
   PPA RESTATEMENT (leave blank if not applicable)
   1. [ ] This is an amendment and restatement to bring a plan into compliance with the Pension Protection Act of 2006 ("PPA") and other legislative and regulatory changes (i.e., the 6-year pre-approved plan restatement).

6. EFFECTIVE DATE (Plan Section 1.25) (complete a. if new plan; complete a. AND b. if an amendment and restatement)
   Initial Effective Date of Plan
   a. January 1, 2014 (enter month day, year) (hereinafter called the "Effective Date" unless 6.b. is entered below)

   Restatement Effective Date. If this is an amendment and restatement, the effective date of the restatement (hereinafter called the "Effective Date") is:
   b. _____ (enter month day, year; may enter a restatement date that is the first day of the current Plan Year. Plan contains appropriate retroactive effective dates with respect to provisions for appropriate laws.)

7. PLAN YEAR (Plan Section 1.65) means, except as otherwise provided in d. below:
   a. [X] the calendar year
   b. [ ] the twelve-month period ending on _____ (e.g., June 30th)
   c. [ ] other: _____ (e.g., a 52/53 week year ending on the date nearest the last Friday in December).

   SHORT PLAN YEAR (Plan Section 1.76). Select below if there is a Short Plan Year (if the effective date of participation is based on a Plan Year, then coordinate with Question 15) (leave blank if not applicable):
   d. [ ] beginning on _____ (enter month day, year; e.g., July 1, 2013) and ending on _____ (enter month day, year).

8. VALUATION DATE (Plan Section 1.86) means:
   a. [X] every day that the Trustee (or Insurer), any transfer agent appointed by the Trustee (or Insurer) or the Employer, and any stock exchange used by such agent are open for business (daily valuation)
   b. [ ] the last day of each Plan Year
   c. [ ] the last day of each Plan Year half (semi-annual)
   d. [ ] the last day of each Plan Year quarter
   e. [ ] other (specify day or days): _____ (must be at least once each Plan Year)
   NOTE: The Plan always permits interim valuations.

9. PLAN NUMBER assigned by the Employer
   a. [ ] 001
   b. [ ] 002
   c. [X] Other: 003

10. TRUSTEE(S) OR INSURER(S) (Plan Sections 1.44 and 1.84):
   a. [ ] **Insurer.** This Plan is funded exclusively with Contracts and the name of the Insurer(s) is:
   (1) _____ (2) _____ (if more than 2, add names to signature page).
   b. [X] **Individual Trustee(s).** Individual Trustee(s) who serve as Trustee(s) over assets not subject to control by a corporate Trustee. (add additional Trustees as necessary)

Name(s)	Title(s)
Charles D. Casarella	President
Joseph Zuzzolo	Vice President

Address and telephone number
1. [X] Use Employer address and telephone number
2. [ ] Use address and telephone number below:

Address: _____
Street

_____ _____ _____
City State Zip

Telephone: _____

c. [ ] **Corporate Trustee(s)** (add additional Trustees as necessary)

Name: _____

Address: _____
Street

_____ _____ _____
City State Zip

Telephone: _____

Directed/Discretionary Trustee. Unless otherwise specified below, if there is a corporate Trustee, it will serve as a Directed (nondiscretionary) Trustee (Plan Section 1.21) and if there is an individual Trustee, he or she will serve as a Discretionary Trustee (Plan Section 1.22) over all Plan assets (select all that apply; leave blank if defaults apply)

d. [ ] Directed Trustee exceptions (leave blank if no exceptions):
Directed Trustee over specified Plan assets (select all that apply; leave blank if none apply)
1. [ ] The corporate Trustee will serve as Directed Trustee over the following assets: _____
2. [ ] The individual Trustee(s) will serve as Directed Trustee over the following assets: _____

Individual Trustee will serve as Directed Trustee (may not be selected with d.1. or d.2.)
3. [ ] over all Plan assets

e. [ ] Discretionary Trustee exceptions (leave blank if no exceptions):
Discretionary Trustee over specified Plan assets (select all that apply; leave blank if none apply)
1. [ ] The individual Trustee(s) will serve as Discretionary Trustee over the following assets: _____
2. [ ] The corporate Trustee will serve as Discretionary Trustee over the following assets: _____

Corporate Trustee will serve as Discretionary Trustee (may not be selected with e.1. or e.2.)
3. [ ] over all Plan assets

NOTE: Appendix A to the Adoption Agreement (Special Effective Dates and Other Permitted Elections) or a separate agreement may be used to appoint a special Trustee for purposes of collecting delinquent contributions. If no such appointment is made, then except as provided in Plan Section 7.3(c), the Trustee will have such responsibility.

Separate trust. Will a separate trust agreement that is approved by the IRS for use with this Plan be used?

f. [X] No
g. [ ] Yes

NOTE: If Yes is selected, an executed copy of the trust agreement between the Trustee and the Employer must be attached to this Plan. The Plan and trust agreement will be read and construed together. The responsibilities, rights and powers of the Trustee will be those specified in the trust agreement.

11. ADMINISTRATOR'S NAME, ADDRESS AND TELEPHONE NUMBER
(If none is named, the Employer will be the Administrator (Plan Section 1.5).)

a. [X] Employer (use Employer address and telephone number)
b. [ ] Other:

Name: _____

Address: _____
Street

_____ _____ _____
City State Zip

Telephone: _____

12. CONTRIBUTION TYPES

The selections made below must correspond with the selections made under the Contributions and Allocations Section of this Adoption Agreement.

FROZEN PLAN OR CONTRIBUTIONS HAVE BEEN SUSPENDED (Plan Section 4.1(c)) (optional)

a. [ ] This is a frozen Plan (i.e., all contributions cease) (if this is a temporary suspension, select a.2):

1. [ ] All contributions ceased as of, or prior to, the effective date of this amendment and restatement and the prior Plan provisions are not reflected in this Adoption Agreement (may enter effective date at 3. below and/or select contributions at b. - h. (optional), skip questions 13-19 and 23-31)
2. [ ] All contributions ceased or were suspended and the prior Plan provisions are reflected in this Adoption Agreement (must enter effective date at 3. below and select contributions at b. - h.)

Effective date

3. [ ] as of _____ (effective date is optional unless a.2. has been selected above or this is the amendment or restatement to freeze the Plan).

CONTRIBUTIONS

The Plan permits the following contributions (select one or more):

b. [X] **Elective Deferrals** (Question 25). Also select below if Roth Elective Deferrals are permitted.

1. [X] Roth Elective Deferrals (Plan Section 1.73)

c. [ ] **401(k) "ADP test safe harbor contributions"** (Question 27)

1. [ ] **401(k) "ADP test safe harbor contributions"** (other than QACA "ADP test safe harbor contributions") (Match, Nonelective)
2. [ ] **QACA "ADP test safe harbor contributions"**

d. [ ] **Employer matching contributions** (Question 28)

e. [X] **Employer profit sharing contributions** (includes "prevailing wage contributions") (Questions 29-30)

f. [X] **Rollover contributions** (Question 46)

g. [ ] **After-tax voluntary Employee contributions** (Question 47)

h. [ ] **SIMPLE 401(k) contributions** (Plan Section 13.1) (may not be selected with 12.c., 12.d., 12.e. or 12.g.)

ELIGIBILITY REQUIREMENTS

13. ELIGIBLE EMPLOYEES (Plan Section 1.28) means all Employees (including Leased Employees) EXCEPT those Employees who are excluded below or elsewhere in the Plan:

a. [ ] **No excluded Employees.** There are no additional excluded Employees under the Plan (skip to Question 14).

b. [ ] **Exclusions - same for all contribution types.** The following Employees are not Eligible Employees for all contribution types (select one or more of e. - k. below; also select 1. for each exclusion selected at e. - j.):

c. [X] **Exclusions - different exclusions apply.** The following Employees are not Eligible Employees for the designated contribution types (select one or more of d. - k. below; also select 1. OR all that apply of 2. - 4. for each exclusion selected at d. - j.):

NOTE: Unless otherwise specified in this Section, Elective Deferrals include Roth Elective Deferrals, after-tax voluntary Employee contributions, and rollover contributions; Matching includes QMACs; and Nonelective Profit Sharing includes QNECs. **"ADP test safe harbor contributions" (SH) (including those made pursuant to a QACA) and SIMPLE 401(k) contributions are subject to the exclusions for Elective Deferrals except as provided in Question 27.**

Exclusions	All Contributions		Elective Deferrals/SH	Matching	Nonelective Profit Sharing
d. No exclusions	N/A		2. [ ]	3. [ ]	4. [ ]
e. Union Employees (as defined in Plan Section 1.28)	1. [X]	**OR**	2. [ ]	3. [ ]	4. [ ]
f. Nonresident aliens (as defined in Plan Section 1.28)	1. [ ]	**OR**	2. [ ]	3. [ ]	4. [ ]
g. Highly Compensated Employees (Plan Section 1.41)	1. [ ]	**OR**	2. [ ]	3. [ ]	4. [ ]
h. Leased Employees (Plan Section 1.49)	1. [X]	**OR**	2. [ ]	3. [ ]	4. [ ]
i. Part-time/temporary/seasonal Employees. A part-time, temporary or seasonal Employee is an Employee whose regularly scheduled service is less than _____ Hours of Service in the relevant eligibility computation period (as defined in Plan Section 1.88). However, if any such excluded Employee actually completes a Year of Service, then such Employee will no longer be part of this excluded class.	1. [ ]	**OR**	2. [ ]	3. [ ]	4. [ ]

j. Other: Employees entitled to benefits from the Halcyon Construction Corp. Defined Benefit Pension Plan _____ 1. [ ] **OR** 2. [ ] 3. [ ] 4. [X]

(must be definitely determinable, may not be based on age or length of service (except in a manner consistent with i. above) or level of Compensation, and, if using the average benefits test to satisfy Code §410(b) coverage testing, must be a reasonable classification)

k. [ ] Other: _____ (must (1) specify contributions to which exclusions apply, (2) be definitely determinable and not based on age or length of service (except in a manner consistent with i. above) or level of Compensation, and, (3) if using the average benefits test to satisfy Code §410(b) coverage testing, be a reasonable classification).

14. CONDITIONS OF ELIGIBILITY (Plan Section 3.1)

a. [ ] **No age or service required.** No age or service required for all contribution types (skip to Question 15).

b. [X] **Eligibility - same for all contribution types.** An Eligible Employee will be eligible to participate in the Plan for all contribution types upon satisfaction of the following (select one or more of e. - n. below; also select 1. (All Contributions) for each condition selected at e. - m.):

c. [ ] **Eligibility - different conditions apply.** An Eligible Employee will be eligible to participate in the Plan upon satisfaction of the following either for all contribution types or to the designated contribution type (select one or more of d. - n. below; also select 1. OR all that apply of 2. - 4. for each condition selected at d. - m.):

NOTE: Unless otherwise specified in this Section, Elective Deferrals include Roth Elective Deferrals, after-tax voluntary Employee contributions, and rollover contributions (unless otherwise selected at Question 46); Matching includes QMACs; and Nonelective Profit Sharing includes QNECs. **"ADP test safe harbor contributions" (SH) (including those made pursuant to a QACA) and SIMPLE 401(k) contributions are subject to the conditions for Elective Deferrals except as provided in Question 27.**

Eligibility Conditions	All Contributions		Elective Deferrals/SH	Matching	Nonelective Profit Sharing
d. No age or service required	N/A		2. [ ]	3. [ ]	4. [ ]
e. Age 20 1/2	1. [ ]	**OR**	2. [ ]	3. [ ]	4. [ ]
f. Age 21	1. [X]	**OR**	2. [ ]	3. [ ]	4. [ ]
g. Age _____ (may not exceed 21)	1. [ ]	**OR**	2. [ ]	3. [ ]	4. [ ]
h. _____ (not to exceed 12) months of service (elapsed time)	1. [ ]	**OR**	2. [ ]	3. [ ]	4. [ ]
i. 1 Year of Service	1. [X]	**OR**	2. [ ]	3. [ ]	4. [ ]
j. 2 Years of Service	N/A	**OR**	N/A	3. [ ]	4. [ ]
k. _____ (not to exceed 12) consecutive month period from the Eligible Employee's employment commencement date and during which at least _____ (not to exceed 1,000) Hours of Service are completed. If an Employee does not complete the stated Hours of Service during the specified time period, the Employee is subject to the 1 Year of Service requirement in i. above.	1. [ ]	**OR**	2. [ ]	3. [ ]	4. [ ]
l. _____ (not to exceed 12) consecutive months of employment from the Eligible Employee's employment commencement date. If an Employee does not complete the stated number of months, the Employee is subject to the 1 Year of Service requirement in i. above.	1. [ ]	**OR**	2. [ ]	3. [ ]	4. [ ]
m. Other: _____ (e.g., date on which 1,000 Hours of Service is completed within the computation period) (must satisfy the Notes below)	1. [ ]	**OR**	2. [ ]	3. [ ]	4. [ ]

n. [ ] Other: _____ (e.g., date on which 1,000 Hours of Service is completed within the computation period) (must specify contributions to which conditions apply and satisfy the Notes below)

NOTE: If m. or n. is selected, the condition must be an age or service requirement that is definitely determinable and may not exceed age 21 and for Elective Deferrals, 1 Year of Service; for Employer matching and/or Nonelective profit sharing

contributions, may not exceed 2 Years of Service. If more than 1 Year of Service is required for Employer matching and/or Nonelective profit sharing contributions, 100% immediate vesting is required.

NOTE: If the service requirement is or includes a fractional year, then, except in a manner consistent with k., an Employee will not be required to complete any specified number of Hours of Service to receive credit for such fractional year. If expressed in months of service, then an Employee will not be required to complete any specified number of Hours of Service in a particular month, unless selected in k. above. In both cases, the Plan must use the elapsed time method to determine service, except that the Hours of Service method will be used for the 1 Year of Service override (e.g., options k. and l.). In such case, select the Hours of Service method at Question 17.

NOTE: Year of Service means Period of Service if elapsed time method is chosen.

Waiver of conditions. The service and/or age requirements specified above will be waived in accordance with the following (leave blank if there are no waivers of conditions):

Requirements waived	**All Contributions**		**Elective Deferrals/SH**	**Matching**	**Nonelective Profit Sharing**
o. [X] If employed on January 1, 2014 the following requirements, and the entry date requirement, will be waived. The waiver applies to any Eligible Employee unless c. selected below. Such Employees will enter the Plan as of such date (select a. and/or b. AND c. if applicable; also select 1. OR all that apply of 2. - 4.):	1. [X]	**OR**	2. [ ]	3. [ ]	4. [ ]
a. [X] service requirement (may let part-time Eligible Employees into the Plan)					
b. [X] age requirement					
c. [ ] waiver is for: _____ (e.g., Employees of a specific division or Employees covered by a Code §410(b)(6)(C) acquisition)					
p. [X] If employed on January 1, 2014 the following requirements, and the entry date requirement, will be waived. The waiver applies to any Eligible Employee unless c. selected below. Such Employees will enter the Plan as of such date (select a. and/or b. AND c. if applicable; also select 1. OR all that apply of 2. - 4.):	1. [X]	**OR**	2. [ ]	3. [ ]	4. [ ]
a. [X] service requirement (may let part-time Eligible Employees into the Plan)					
b. [X] age requirement					
c. [ ] waiver is for: _____ (e.g., Employees of a specific division or Employees covered by a Code §410(b)(6)(C) acquisition)					

Amendment or restatement to change eligibility requirements

q. [ ] This amendment or restatement (or a prior amendment and restatement) modified the eligibility requirements and the prior eligibility conditions continue to apply to the Eligible Employees specified below. If this option is NOT selected, then all Eligible Employees must satisfy the eligibility conditions set forth above.

1. [ ] The eligibility conditions above only apply to Eligible Employees who were not Participants as of the effective date of the modification.
2. [ ] The eligibility conditions above only apply to individuals who were hired on or after the effective date of the modification.

15. EFFECTIVE DATE OF PARTICIPATION (ENTRY DATE) (Plan Section 3.2)

a. [X] **Entry date same for all contribution types.** An Eligible Employee who has satisfied the eligibility requirements will become a Participant in the Plan for all contribution types as of the entry date selected below (select one of c. - g., j. or k. below; also select 1. (All Contributions) for entry date selected at c. - g. or j.):

b. [ ] **Entry date - different dates apply.** An Eligible Employee who has satisfied the eligibility requirements will become a Participant in the Plan for the designated contribution type as of the entry dates selected below (select one or more of c. - k. below; also select all that apply of 2. - 4. for each entry date selected at c. - j.)

NOTE: Option g. below can only be selected when eligibility for Elective Deferral purposes is six months of service or less and age is 20 1/2 or less. Options g.3. and g.4. may be selected when eligibility is 1 1/2 Years of Service or less and age is 20 1/2 or less and the Plan provides for 100% vesting.

NOTE: Unless otherwise specified in this Section or any other Section, Elective Deferrals include Roth Elective Deferrals, after-tax voluntary Employee contributions, and rollover contributions (unless otherwise selected at Question 46); Matching includes QMACs; and Nonelective Profit Sharing includes QNECs. **"ADP test safe harbor contributions"**

(SH) (including those made pursuant to a QACA) and SIMPLE 401(k) contributions are subject to the provisions for Elective Deferrals except as provided in Question 27.

Entry Date	All Contributions		Elective Deferrals/SH	Matching	Nonelective Profit Sharing
c. Date requirements met	1. [ ]	OR	2. [ ]	3. [ ]	4. [ ]
d. First day of the month coinciding with or next following date requirements met	1. [ ]	OR	2. [ ]	3. [ ]	4. [ ]
e. First day of the Plan Year quarter coinciding with or next following date requirements met	1. [X]	OR	2. [ ]	3. [ ]	4. [ ]
f. First day of Plan Year or first day of 7th month of Plan Year coinciding with or next following date requirements met	1. [ ]	OR	2. [ ]	3. [ ]	4. [ ]
g. First day of Plan Year coinciding with or next following date requirements met	1. [ ]	OR	2. [ ]	3. [ ]	4. [ ]
h. First day of Plan Year in which requirements met	N/A		N/A	3. [ ]	4. [ ]
i. First day of Plan Year nearest date requirements met	N/A		N/A	3. [ ]	4. [ ]
j. Other: _____ (must be definitely determinable and satisfy Note below)	1. [ ]	OR	2. [ ]	3. [ ]	4. [ ]

k. [ ] Other: _____ (must specify contributions to which the conditions apply and must be definitely determinable and satisfy Note below)

NOTE: If j. or k. above is selected, then it must be completed in a manner that ensures an Eligible Employee who has satisfied the maximum age (21) and service requirements (1 Year (or Period) of Service (or more than 1 year if full and immediate vesting)) and who is otherwise entitled to participate, will become a Participant not later than the earlier of (a) 6 months after such requirements are satisfied, or (b) the first day of the first Plan Year after such requirements are satisfied, unless the Employee separates from service before such participation date.

SERVICE

16. RECOGNITION OF SERVICE WITH OTHER EMPLOYERS (Plan Sections 1.62 and 1.88)

a. [X] No service with other employers is recognized except as otherwise required by law (e.g., the Plan already provides for the recognition of service with Employers who have adopted this Plan as well as service with Affiliated Employers and predecessor Employers who maintained this Plan; skip to Question 17).

b. [ ] Prior service with the designated employers is recognized as follows (answer c. and select one or more of c.1. - 3.; select d. - g. as applicable) (if more than 3 employers, attach an addendum to the Adoption Agreement or complete option 1. under Section B of Appendix A to the Adoption Agreement (Special Effective Dates and Other Permitted Elections)):

Other Employer	Eligibility	Vesting	Contribution Allocation
c. [ ] Employer name: _____	1. [ ]	2. [ ]	3. [ ]
d. [ ] Employer name: _____	1. [ ]	2. [ ]	3. [ ]
e. [ ] Employer name: _____	1. [ ]	2. [ ]	3. [ ]
f. [ ] Any entity the Employer acquires whether by asset or stock purchase, but only with respect to individuals who are employees of the acquired entity at the time of the acquisition	1. [ ]	2. [ ]	3. [ ]
Limitations			
g. [ ] The following provisions or limitations apply with respect to the recognition of prior service: _____ (e.g., credit service with X only on/following 1/1/13 or credit all service with entities the Employer acquires after 12/31/12)	1. [ ]	2. [ ]	3. [ ]

NOTE: If the other Employer(s) maintained this qualified Plan, then Years (and/or Periods) of Service with such Employer(s) must be recognized pursuant to Plan Sections 1.62 and 1.88 regardless of any selections above.

17. SERVICE CREDITING METHOD (Plan Sections 1.62 and 1.88)

NOTE: The provisions set forth in the definition of Year of Service in Plan Section 1.88 will apply, including the following defaults, except as otherwise elected below:

1. A Year of Service means completion of at least 1,000 Hours of Service during the applicable computation period.
2. Hours of Service (Plan Section 1.43) will be based on actual Hours of Service.
3. For eligibility purposes, the computation period will be as defined in Plan Section 1.88 (i.e., shift to the Plan Year if the eligibility condition is one (1) Year of Service or less).
4. For vesting and allocation purposes, the computation period will be the Plan Year.
5. The one-year hold-out rule after a 1-Year Break in Service will not be used.

a. [ ] **Elapsed time method.** (Period of Service applies instead of Year of Service) Instead of Hours of Service, elapsed time will be used for:

1. [ ] all purposes (skip to Question 18)
2. [ ] the following purposes (select one or more):
   a. [ ] eligibility to participate
   b. [ ] vesting
   c. [ ] sharing in allocations or contributions

b. [ ] **Alternative definitions for the Hours of Service method.** Instead of the defaults, the following alternatives will apply for the Hours of Service method (select one or more):

1. [ ] **Eligibility computation period.** Instead of shifting to the Plan Year, the eligibility computation period after the initial eligibility computation period will be based on each anniversary of the date the Employee first completes an Hour of Service
2. [ ] **Vesting computation period.** Instead of the Plan Year, the vesting computation period will be the date an Employee first performs an Hour of Service and each anniversary thereof.
3. [ ] **Equivalency method.** Instead of using actual Hours of Service, an equivalency method will be used to determine Hours of Service for:
   a. [ ] all purposes
   b. [ ] the following purposes (select one or more):
      1. [ ] eligibility to participate
      2. [ ] vesting
      3. [ ] sharing in allocations or contributions

   Such method will apply to:
   c. [ ] all Employees
   d. [ ] Employees for whom records of actual Hours of Service are not maintained or available (e.g., salaried Employees)
   e. [ ] other: _____ (e.g., per-diem Employees only)

   Hours of Service will be determined on the basis of:
   f. [ ] days worked (10 hours per day)
   g. [ ] weeks worked (45 hours per week)
   h. [ ] semi-monthly payroll periods worked (95 hours per semi-monthly pay period)
   i. [ ] months worked (190 hours per month)
   j. [ ] bi-weekly payroll periods worked (90 hours per bi-weekly pay period)
   k. [ ] other: _____ (e.g., option f. is used for per-diem Employees and option g. is used for on-call Employees)

4. [ ] **Number of Hours of Service required.** Instead of 1,000 Hours of Service, Year of Service means the applicable computation period during which an Employee has completed at least _____ (not to exceed 1,000) Hours of Service for:
   a. [ ] all purposes
   b. [ ] the following purposes (select one or more):
      1. [ ] eligibility to participate
      2. [ ] vesting
      3. [ ] sharing in allocations or contributions

VESTING

18. VESTING OF PARTICIPANT'S INTEREST (Plan Section 6.4(b))

a. [ ] N/A (no Employer Nonelective profit sharing contributions (other than "prevailing wage contributions"), matching contributions or QACA "ADP test safe harbor contributions"; skip to Question 20)

b. [X] The vesting provisions selected below apply to all Participants unless otherwise selected below. In addition, option m. under Section B of Appendix A to the Adoption Agreement (Special Effective Dates and Other Permitted Elections) can be used to specify any exceptions to the provisions below.

Vesting waiver. Employees who were employed on the date(s) indicated below and were Participants as of such date are 100% Vested. For Participants who enter the Plan after such date, the vesting provisions selected below apply (leave blank if no waiver applies):

1. [ ] For all contributions. The vesting waiver applies to all contributions if employed on _____ (enter date)
2. [ ] For designated contributions. The vesting waiver applies to (select one or more):
   a. [ ] Employer Nonelective profit sharing contributions if employed on _____
   b. [ ] Employer matching contributions if employed on _____
   c. [ ] QACA "ADP test safe harbor contributions" if employed on _____

Vesting for Employer Nonelective profit sharing contributions

c. [ ] N/A (no Employer Nonelective profit sharing contributions (other than "prevailing wage contributions"); skip to f.)

d. [ ] 100% vesting. Participants are 100% Vested in Employer Nonelective profit sharing contributions upon entering Plan (required if eligibility requirement is greater than one (1) Year (or Period) of Service).

e. [X] The following vesting schedule, based on a Participant's Years of Service (or Periods of Service if the elapsed time method is selected), applies to Employer Nonelective profit sharing contributions:

1. [X] 6 Year Graded: 0-1 year-0%; 2 years-20%; 3 years-40%; 4 years-60%; 5 years-80%; 6 years-100%
2. [ ] 4 Year Graded: 1 year-25%; 2 years-50%; 3 years-75%; 4 years-100%
3. [ ] 5 Year Graded: 1 year-20%; 2 years-40%; 3 years-60%; 4 years-80%; 5 years-100%
4. [ ] 3 Year Cliff: 0-2 years-0%; 3 years-100%
5. [ ] Other - Must be at least as liberal as either 1. or 4. above in each year without switching between the two schedules:

Years (or Periods) of Service	Percentage
_____	_____%
_____	_____%
_____	_____%
_____	_____%
_____	_____%
_____	_____%

Vesting for Employer matching contributions

f. [X] N/A (no Employer matching contributions; skip to j.)

g. [ ] The schedule above will also apply to Employer matching contributions.

h. [ ] 100% vesting. Participants are 100% Vested in Employer matching contributions upon entering Plan. (required if eligibility requirement is greater than 1 Year (or Period) of Service)

i. [ ] The following vesting schedule, based on a Participant's Years of Service (or Periods of Service if the elapsed time method is selected), applies to Employer matching contributions:

1. [ ] 6 Year Graded: 0-1 year-0%; 2 years-20%; 3 years-40%; 4 years-60%; 5 years-80%; 6 years-100%
2. [ ] 4 Year Graded: 1 year-25%; 2 years-50%; 3 years-75%; 4 years-100%
3. [ ] 5 Year Graded: 1 year-20%; 2 years-40%; 3 years-60%; 4 years-80%; 5 years-100%
4. [ ] 3 Year Cliff: 0-2 years-0%; 3 years-100%
5. [ ] Other - must be at least as liberal as either 1. or 4. above in each year without switching between the two schedules:

Years (or Periods) of Service	Percentage
_____	_____%
_____	_____%
_____	_____%
_____	_____%
_____	_____%
_____	_____%

Vesting for QACA safe harbor contributions

j. [X] N/A (no QACA "ADP test safe harbor contributions"; skip to Question 19)

k. [ ] 100% vesting. Participants are 100% Vested in QACA "ADP test safe harbor contributions" upon entering Plan (skip to Question 19).

l. [ ] The following vesting schedule, based on a Participant's Years of Service (or Periods of Service if the elapsed time method is selected), applies to the Participant's Qualified Automatic Contribution Safe Harbor Account:

1. [ ] 100% after two years: 0-1 year-0%; 2 years-100%
2. [ ] Other - Must be at least as liberal as 1. above in each year:

Years (or Periods) of Service	Percentage
Less than 1	_____%
1	_____%
2	100%

19. VESTING OPTIONS

Excluded vesting service. The following Years of Service will be disregarded for vesting purposes (select all that apply; leave blank if none apply):

a. [ ] Service prior to the initial Effective Date of the Plan or a predecessor plan (as defined in Regulations §1.411(a)-5(b)(3))
b. [ ] Service prior to the computation period in which an Employee has attained age 18

Vesting for death, Total And Permanent Disability and Early Retirement Date. Regardless of the vesting schedule, a Participant will become fully Vested upon (select all that apply; leave blank if none apply):

c. [X] Death
d. [X] Total and Permanent Disability
e. [ ] Early Retirement Date

NOTE: Unless otherwise elected at option v. under Section B of Appendix A to the Adoption Agreement (Special Effective Dates and Other Permitted Elections), the options above apply to QACA "ADP test safe harbor contributions," if any, as well as to Employer Nonelective profit sharing contributions and matching contributions.

RETIREMENT AGES

20. NORMAL RETIREMENT AGE ("NRA") (Plan Section 1.55) means:

a. [ ] **Specific age.** The date a Participant attains age _____ (see Note below).
b. [X] **Age/participation.** The later of the date a Participant attains age _65_ (see Note below) or the _5th_ (not to exceed 5th) anniversary of the first day of the Plan Year in which participation in the Plan commenced.

NOTE: A Participant's age specified above may not exceed 65 and, if this Plan includes transferred pension assets, may not be less than age 62 unless the Employer has evidence that the representative typical retirement age for the adopting Employer's industry is a lower age, but may be no less than age 55.

21. NORMAL RETIREMENT DATE (Plan Section 1.56) means, with respect to any Participant, the:

a. [ ] date on which the Participant attains "NRA"
b. [X] first day of the month coinciding with or next following the Participant's "NRA"
c. [ ] first day of the month nearest the Participant's "NRA"
d. [ ] Anniversary Date coinciding with or next following the Participant's "NRA"
e. [ ] Anniversary Date nearest the Participant's "NRA"
f. [ ] Other: _____ (e.g., first day of the month following the Participant's "NRA").

22. EARLY RETIREMENT DATE (Plan Section 1.23)

a. [X] N/A (no early retirement provision provided)
b. [ ] Early Retirement Date means the:
   1. [ ] date on which a Participant satisfies the early retirement requirements
   2. [ ] first day of the month coinciding with or next following the date on which a Participant satisfies the early retirement requirements
   3. [ ] Anniversary Date coinciding with or next following the date on which a Participant satisfies the early retirement requirements

   Early retirement requirements

   4. [ ] Participant attains age _____
      AND, completes.... (leave blank if not applicable)
      a. [ ] at least _____ Years (or Periods) of Service for vesting purposes
      b. [ ] at least _____ Years (or Periods) of Service for eligibility purposes

COMPENSATION

23. COMPENSATION with respect to any Participant is defined as follows (Plan Sections 1.18 and 1.40).

Base definition

a. [X] Wages, tips and other compensation on Form W-2
b. [ ] Code §3401(a) wages (wages for withholding purposes)
c. [ ] 415 safe harbor compensation

NOTE: Plan Sections 1.18(d) and 1.40 provide that the base definition of Compensation includes deferrals that are not included in income due to Code §§401(k), 125,132(f)(4), 403(b), 402(h)(1)(B)(SEP), 414(h)(2), & 457.

Determination period. Compensation will be based on the following "determination period" (this will also be the Limitation Year unless otherwise elected at option i. under Section B of Appendix A to the Adoption Agreement (Special Effective Dates and Other Permitted Elections)):

d. [X] the Plan Year
e. [ ] the Fiscal Year coinciding with or ending within the Plan Year
f. [ ] the calendar year coinciding with or ending within the Plan Year

Adjustments to Compensation (for Plan Section 1.18). Compensation will be adjusted by:

g. [X] **No adjustments.** No adjustments to Compensation for all contribution types (skip to v. below).
h. [ ] **Adjustments - same for all contribution types.** The following Compensation adjustments apply to all contribution types (select one or more of l. - u. below; also select 1. (All Contributions) for each adjustment selected at l. - t.):
i. [ ] **Adjustments - different adjustments apply.** The following Compensation adjustments for the designated contribution type (select one or more of j. - u. below; also select 1. OR all that apply of 2. - 5. for each adjustment selected at j. - t.):

NOTE: Elective Deferrals include Roth Elective Deferrals, Matching includes QMACs and matching "ADP test safe harbor contributions" (including those made pursuant to a QACA), and Nonelective Profit Sharing includes QNECs unless specified otherwise. ADP Safe Harbor Nonelective includes nonelective "ADP test safe harbor contributions" (including those made pursuant to a QACA).

Adjustments	All Contributions		Elective Deferrals	Matching	Nonelective Profit Sharing	ADP Safe Harbor Nonelective
j. no Adjustments	N/A		2. [ ]	3. [ ]	4. [ ]	5. [ ]
k. excluding salary reductions (401(k), 125, 132(f)(4), 403(b), SEP, 414(h)(2) pickup, & 457)	N/A		N/A	N/A	4. [ ]	5. [ ]
l. excluding reimbursements or other expense allowances, fringe benefits (cash or non-cash), moving expenses, deferred compensation (other than deferrals specified in k. above) and welfare benefits.	1. [ ]	**OR**	2. [ ]	3. [ ]	4. [ ]	5. [ ]
m. excluding Compensation paid during the "determination period" while not a Participant in the component of the Plan for which the definition applies.	1. [ ]	**OR**	2. [ ]	3. [ ]	4. [ ]	5. [ ]
n. excluding Compensation paid during the "determination period" while not a Participant in *any* component of the Plan for which the definition applies.	1. [ ]	**OR**	2. [ ]	3. [ ]	4. [ ]	5. [ ]
o. excluding Military Differential Pay	1. [ ]	**OR**	2. [ ]	3. [ ]	4. [ ]	5. [ ]
p. excluding overtime	1. [ ]	**OR**	2. [ ]	3. [ ]	4. [ ]	5. [ ]
q. excluding bonuses	1. [ ]	**OR**	2. [ ]	3. [ ]	4. [ ]	5. [ ]
r. excluding commissions	1. [ ]	**OR**	2. [ ]	3. [ ]	4. [ ]	5. [ ]
s. excluding Compensation paid by an Affiliated Employer that has not adopted this Plan.	1. [ ]	**OR**	2. [ ]	3. [ ]	4. [ ]	5. [ ]
t. other: _____ (e.g., describe Compensation from the elections available above or a combination thereof as to a Participant group (e.g., no exclusions as to Division A Employees and exclude bonuses as to Division B Employees); and/or describe another exclusion (e.g., exclude shift differential pay))	1. [ ]	**OR**	2. [ ]	3. [ ]	4. [ ]	5. [ ]

u. other: _____ (e.g., describe Compensation from the elections available above or a combination thereof as to a contribution source and Participant group (e.g., no exclusions as to Division A Employees and exclude bonuses as to Division B Employees); and/or describe another exclusion (e.g., exclude shift differential pay)).

NOTE: If p., q., r., s., t. or u. is selected, the definition of Compensation could violate the nondiscrimination rules. In addition, p., q., r., s., t. or u. are not recommended if the Plan is using the ADP/ACP safe harbor provisions.

Military Differential Pay special effective date (leave blank if not applicable)

v. [ ] If this is a PPA restatement and the provisions above regarding Military Differential Pay (included unless o. is selected) have a later effective date than Plan Years beginning after December 31, 2008, then enter the date such provisions were first effective: _____ (may not be earlier than January 1, 2009; for Plan Years beginning prior to January 1, 2009, Military Differential Pay is treated in accordance with the post-severance compensation provisions in the following Question).

24. POST-SEVERANCE COMPENSATION (415 REGULATIONS)

The following optional provision of the 415 Regulations will apply to Limitation Years beginning on or after July 1, 2007 unless otherwise elected below:

415 Compensation (post-severance compensation adjustments) (select all that apply at a. - b.; leave blank if none apply)

NOTE: Unless otherwise elected under a. below, the following defaults apply: 415 Compensation will **include** (to the extent provided in Plan Section 1.40), post-severance regular pay, leave cash-outs and payments from nonqualified unfunded deferred compensation plans.

a. [ ] The defaults listed above apply except for the following (select one or more):
   1. [ ] Leave cash-outs will be **excluded**
   2. [ ] Nonqualified unfunded deferred compensation will be **excluded**
   3. [ ] Military Differential Pay will be **included** (Plan automatically includes for Limitation Years beginning after December 31, 2008)
   4. [ ] Disability continuation payments will be **included** for:
      a. [ ] Nonhighly Compensated Employees only
      b. [ ] all Participants and the salary continuation will continue for the following fixed or determinable period: _____

b. [ ] The last paycheck ("administrative delay") rule will be applied (amounts paid in the first few weeks of a Limitation Year due to administrative delay relate back to the prior Limitation Year).

Plan Compensation (post-severance compensation adjustments)

c. [X] **Defaults apply.** For all contribution types, Compensation will **include** (to the extent provided in Plan Section 1.18 and to the extent such amounts would be included in Compensation if paid prior to severance of employment) post-severance regular pay, leave cash-outs, and payments from nonqualified unfunded deferred compensation plans (skip to n. below).

d. [ ] **Exclude all post-severance compensation.** Exclude all post-severance compensation for all contribution types (skip to n. below).

e. [ ] **Post-severance adjustments - same for all contribution types.** The defaults listed at c. apply except for the following for all contribution types (select one or more of i. - m. below; also select 1. (All Contributions) for each adjustment selected):

f. [ ] **Post-severance adjustments - different adjustments apply.** The defaults listed at c. apply except for the following for the designated contribution type (select one or more of g. - m. below; also select 1. OR all that apply of 2. - 5. for each adjustment selected):

Adjustments	All Contributions	Elective Deferrals	Matching	Nonelective Profit Sharing	ADP Safe Harbor Nonelective
g. Defaults apply	N/A	2. [ ]	3. [ ]	4. [ ]	5. [ ]
h. Exclude all post-severance compensation (may violate the nondiscrimination requirements)	N/A	2. [ ]	3. [ ]	4. [ ]	5. [ ]
i. Regular pay will be **excluded** (may violate the nondiscrimination requirements)	1. [ ] **OR**	2. [ ]	3. [ ]	4. [ ]	5. [ ]
j. Leave cash-outs will be **excluded**	1. [ ] **OR**	2. [ ]	3. [ ]	4. [ ]	5. [ ]
k. Nonqualified unfunded deferred compensation will be **excluded**	1. [ ] **OR**	2. [ ]	3. [ ]	4. [ ]	5. [ ]
l. Military Differential Pay will be **included**	1. [ ] **OR**	2. [ ]	3. [ ]	4. [ ]	5. [ ]
m. Disability continuation payments will be **included** for:	1. [ ] **OR**	2. [ ]	3. [ ]	4. [ ]	5. [ ]

   a. [ ] Nonhighly Compensated Employees only
   b. [ ] all Participants and the salary continuation will continue for the following fixed or determinable period: _____

NOTE: The above treatment of Military Differential Pay only applies to Plan Years beginning prior to January 1, 2009. For Plan Years beginning after such date, Military Differential Pay is not considered post-severance compensation and the provisions of Question 23 apply.

Post-severance compensation special effective date (leave blank if not applicable)

n. [ ] If this is a PPA restatement and the post-severance compensation adjustments above for 415 Compensation or Plan Compensation applied other than the first day of the Plan Year beginning on or after July 1, 2007, then enter the date such provisions were first effective: _____

CONTRIBUTIONS AND ALLOCATIONS

25. SALARY DEFERRAL ARRANGEMENT - ELECTIVE DEFERRALS (Plan Section 12.2) (skip if Elective Deferrals NOT selected at Question 12.b.) (Roth Elective Deferrals are permitted if selected at Question 12.b.1)

A. **Elective Deferral limit.** Each Participant may elect to have Compensation deferred by:

a. [ ] up to _____%

b. [ ] from _____% (may not be less than 1%) to _____%

c. [X] up to the maximum amount allowed by law (i.e., Code §§402(g) and 415)

B. **Additional Elective Deferral limits.** Regardless of the above limits (if any), the following apply (select all that apply; leave blank if none apply):

d. [ ] If a. or b. above is selected, a Participant may make a separate election to defer up to _____% of any irregular pay (e.g., bonus) regardless of the limitation in a. or b. above

e. [ ] For Participants who are HCEs determined as of the beginning of a Plan Year, then instead of 25.A. applying, the Elective Deferral limit is (must be equal to or lower than limit selected in 25.A.; may not be selected if HCEs are excluded at 13.g.1 or 13.g.2):

1. [ ] _____% of Compensation
2. [ ] the percentage equal to the Elective Deferral limit in effect under Code §402(g)(3) for the calendar year that begins with or within the Plan Year divided by the annual compensation limit in effect for the Plan Year under Code §401(a)(17)
3. [ ] other: _____ (e.g., must be a specific limit that only applies to some or all HCEs)

C. **Catch-Up Contributions** (Plan Section 1.15). May eligible Participants make Catch-Up Contributions?

f. [ ] No (skip to D. below)

g. [X] Yes, and the following provisions apply:

Matching Catch-Up Contributions. Will Catch-Up Contributions be taken into account in applying any matching contribution under the Plan?

1. [ ] Yes
2. [X] No (may not be selected if this Plan provides for matching "ADP test safe harbor contributions" or "ACP test safe harbor matching contributions")

Special effective date (may be left blank if effective date is same as the Plan or Restatement Effective Date)

3. [X] The effective date of the Catch-Up Contribution provisions is July 1, 2014 (enter special effective date)

Applying limits. If the amount of Elective Deferrals that may be made to the Plan is limited in A. and/or B. above, are Catch-Up Contributions aggregated with other Elective Deferrals in applying such limits?

4. [X] No or N/A (there are no limits or Catch-Up Contributions may be made in addition to any imposed limits)
5. [ ] Yes (if selected, the limits in A. and/or B. must not be less than 75% of Compensation)

D. **Elective Deferral special effective date** (may be left blank if effective date is same as the Plan or Restatement Effective Date)

h. [X] The effective date of the Elective Deferral component of the Plan is July 1, 2014 (enter month day, year; may not be earlier than the date on which the Employer first adopts the Elective Deferral component of the Plan).

26. AUTOMATIC CONTRIBUTION ARRANGEMENT (Plan Section 12.2 and 12.9) (skip if Elective Deferrals are NOT selected at Question 12.b.)

A. **Automatic Deferral provisions.** Will the Plan include Automatic Deferral provisions?

a. [X] No (skip to Question 27)

b. [ ] Yes, this Plan includes (select one):

1. [ ] A traditional Automatic Contribution Arrangement (not an Eligible Automatic Contribution Arrangement (EACA) or a Qualified Automatic Contribution Arrangement (QACA))
2. [ ] An Eligible Automatic Contribution Arrangement (EACA) but not a Qualified Automatic Contribution Arrangement (QACA)
3. [ ] A Qualified Automatic Contribution Arrangement (QACA) (a QACA, by definition, satisfies the requirements of an Eligible Automatic Contribution Arrangement (EACA)) (must be selected if QACA safe harbor contributions is selected at 12.c.2.)

B. **Participants subject to the Automatic Deferral provisions.** The Automatic Deferral provisions apply to Employees who become Participants on or after the effective date of the Automatic Deferral provisions, except as otherwise provided herein.

Application to existing Participants. For Employees who became Participants prior to the effective date of the Automatic Deferral provisions (if an EACA and not a QACA, see the Note below; skip if new Plan):

c. [ ] Provisions do not apply to existing Participants (may not be selected with QACA)

d. [ ] Provisions apply to existing Participants in accordance with the following (select one):

1. [ ] **All Participants.** All Participants, regardless of any prior Salary Deferral Agreement.
2. [ ] **Affirmative Election of at least Automatic Deferral amount.** All Participants, except those who have an Affirmative Election in effect on the effective date of the Automatic Deferral provisions that is at least equal to the Automatic Deferral amount and except as otherwise provided below with respect to the escalation of deferral provisions.
3. [ ] **No existing Affirmative Election.** All Participants, except those who have an Affirmative Election in effect on the effective date of the Automatic Deferral provisions and except as otherwise provided below with respect to the escalation of deferral provisions.
4. [ ] **Escalation only.** Escalation provisions in Part D. below apply to all Participants, including those who become Participants on or after the effective date of the escalation provisions, who have Affirmative Elections. No other Automatic Deferral provisions apply. If selected, complete 26.f. under Part C. below with the percentage at which escalation applies and complete 26.j. under Part D. (may not be selected with QACA)

e. [ ] Other (may not be used if a QACA): _____ (must be definitely determinable in accordance with Regulation §1.401-1(b)(1)(ii)).

NOTE: Option E.k.3. may be used to exclude other Participants from the Automatic Deferral provisions.

NOTE: If an EACA and not a QACA and c. is selected (i.e., EACA does not apply to existing Participants), then the six-month period for relief from the excise tax under Code §4979(f)(1) will not apply. In addition, effective for Plan Years beginning on or after January 1, 2010, the six-month period for relief from the excise tax will only apply if all HCEs and NHCEs are covered Employees under the EACA for the entire Plan Year (or for the portion of the Plan Year that such Employees are Eligible Employees under the Plan within the meaning of Code §410(b)).

C. **Automatic Deferral amount.** Unless a Participant makes an Affirmative Election, the Employer will withhold the following Automatic Deferral amount (only select one):

f. [ ] _____% of Compensation for each payroll period (if a QACA, must not be more than 10% and may not be less than 3% if escalation provisions used in j. below or 6% if no escalation provisions are selected)

g. [ ] $_____ for each payroll period (may not be selected if a QACA or EACA)

h. [ ] **QACA statutory minimum schedule** (may select even if Plan is not a QACA). Unless a modified QACA statutory schedule is selected below, the Employer will withhold from a Participant's Compensation each payroll period the percentage of Compensation set forth in the following, which is based on the Plan Year of application to a Participant: 1-2 years-3%; 3 years-4%; 4 years-5%; 5 or more-6%. (if selected, skip D.)

1. [ ] The following modified QACA statutory schedule will apply:

Plan Year of application to a Participant	Automatic Deferral Percentage
1 - 2	_____% (not less than 3)
3	_____% (not less than 4)
4	_____% (not less than 5)
5	_____% (not less than 6 and not more than 10)
6 and thereafter	_____% (not less than 6 and not more than 10)

NOTE: If Plan only applies escalation provisions to Participants with Affirmative Elections then select f. above and enter the percentage at which escalation applies (e.g., if escalation only applies to Participants who have an Affirmative Election of 3% or greater, then enter 3%).

D. **Escalation of Automatic Deferral amount** (may not be selected with 26.h.)

i. [ ] No escalation

j. [ ] **Scheduled increases.** The initial Automatic Deferral amount will increase as selected below (may not be selected with h. above):

1. [ ] by _____% of Compensation up to a maximum of _____% of Compensation (may not be selected if a QACA)
2. [ ] by $_____ up to a maximum of $_____ (may not be selected if a QACA or EACA)
3. [ ] other: _____ (in order to satisfy the QACA requirements (if applicable), an alternative Automatic Deferral amount schedule (i) must be uniform based on the number of years, or portions of years, since the beginning of the initial period for a Participant, (ii) must satisfy the minimum percentage requirement in h. above throughout the Plan Year, and (iii) must not exceed 10% of Compensation)

Timing of escalation

4. [ ] N/A (entry at j.3. includes timing provision)
5. [ ] The escalation provision above will apply as of:
   a. [ ] each anniversary of the Participant's date of hire
   b. [ ] each anniversary of the Participant's Entry Date
   c. [ ] the first day of each Plan Year
   d. [ ] the first day of each calendar year
   e. [ ] other: _____ (must be a specified date that occurs at least annually after the Plan Year in which the Participant is first subject to the Automatic Contribution Arrangement).

First period of application. Unless selected below, the escalation provision above will apply as of the second period specified above that begins after the period in which the Participant first has contributions made pursuant to a default election.

f. [ ] The escalation provision will apply as of the first period after the Participant first has contributions made pursuant to a default election (or the date of Affirmative Election if 6. or 7. below is selected).

Application to Participants with Affirmative Elections

Unless selected below, the escalation provisions will not apply to Participants with an Affirmative Election.

6. [ ] The escalation provisions apply to Participants with an Affirmative Election of at least _____% of Compensation.
7. [ ] The escalation provisions apply to Participants with an Affirmative Election in accordance with the following rules: ____ (must be definitely determinable in accordance with Regulation §1.401-1(b)(1)(ii) and if an EACA, must be uniform).

E. **Other Automatic Deferral elections** (leave blank if none apply)

k. [ ] **Optional elections** (select one or more)

Type of Elective Deferral. The Automatic Deferral is a Pre-Tax Elective Deferral unless selected below (may only be selected if Roth Elective Deferrals are selected at 12.b.1.):

1. [ ] the Automatic Deferral is a Roth Elective Deferral
2. [ ] other: _____ (e.g., 50% Pre-Tax and 50% Roth Elective Deferrals)

Excluded Participants. If this is not a QACA, then the following Participants are excluded from the Automatic Deferral provisions:

3. [ ] _____ (must be definitely determinable; e.g., union Employees or Participants employed in Division A) (may not be selected if a QACA). If this option is elected and the Plan is an EACA, then the six-month period for relief from the excise tax under Code §4979(f)(1) will not apply.

F. **EACA elections** (skip if NOT a QACA or EACA)

Permissible withdrawals. Does the Plan permit Participant permissible withdrawals (as described in Plan Section 12.2(b)(4)) within 90 days (or less) of first Automatic Deferral?

l. [ ] No
m. [ ] Yes, within 90 days of first Automatic Deferral
n. [ ] Yes, within: _____ days (may not be less than 30 nor more than 90 days)

Affirmative Election. For Plan Years beginning on or after January 1, 2010, will Participants who make an Affirmative Election continue to be covered by the EACA provisions (i.e., their Affirmative Election will remain intact but they must receive an annual notice)? (skip if a QACA)

o. [ ] Yes (if selected, then the annual notice must be provided to Participants)
p. [ ] No (if selected, then the Plan cannot use the six-month period for relief from the excise tax of Code §4979(f)(1))

G. **Special effective date** (may be left blank if the effective date is the same as the Effective Date)

q. [ ] The Automatic Deferral provisions are effective for Plan Years beginning after _____ (if using an EACA or QACA and this is a PPA restatement and the provisions were effective prior to the Restatement Effective Date, then enter the date such provisions were first effective; may not be earlier than December 31, 2007)
r. [ ] Other: _____ (If using an EACA or QACA and this is a PPA restatement and the provisions were effective prior to the Restatement Effective Date, then enter the date such provisions were first effective; may not be earlier than December 31, 2007. If there are multiple retroactive special effective dates (e.g., for a PPA restatement), complete this Question 26 based on the current Plan provisions and then duplicate this Question 26 and attach as an Appendix to indicate the special retroactive effective dates and provisions that applied.)

27. 401(k) ADP TEST SAFE HARBOR PROVISIONS (Plan Sections 12.8 and 12.9) (skip if "ADP test safe harbor contributions" are NOT selected at Question 12.c.)

NOTE: If the Employer wants the discretion to determine whether the provisions will apply on a year-by-year basis, then the Employer may select 27.a. or b. and 27.d.3.

A. **ADP and ACP test safe harbor.** For any Plan Year in which any type of matching contribution is made, will the "ADP and ACP test safe harbor" provisions be used?

a. [ ] No. Only the "ADP (and NOT the ACP) test safe harbor" provisions will be used.
b. [ ] Yes. Both the "ADP and ACP test safe harbor" provisions will be used for any Plan Year in which any type of matching contribution is made. (If selected, complete the provisions of the Adoption Agreement relating to Employer matching contributions (i.e., Question 28) that will apply in addition to any selections made in c. below. Also, no allocation conditions may be imposed at 28.E. unless no HCEs are eligible to receive the matching contribution)

B. **Safe harbor contribution.** The Employer will make the following "ADP test safe harbor contribution" for the Plan Year:

NOTE: The "ACP test safe harbor" is automatically satisfied if the only matching contribution made to the Plan is either, as described below, (1) a basic matching contribution (traditional or QACA) or (2) an enhanced matching contribution (traditional or QACA) that does not provide a match on Elective Deferrals in excess of 6% of Compensation.

c. [ ] **Safe harbor matching contribution** (select one of 1. - 4. **AND** one of 5. - 9.). The Employer will make matching "ADP test safe harbor contributions" to the Account of each "eligible Participant" as elected below.

1. [ ] **Traditional basic matching contribution** (may not be selected if a QACA). The Employer will contribute an amount equal to the sum of 100% of the amount of the Participant's Elective Deferrals that do not exceed 3% of the Participant's Compensation, plus 50% of the amount of the Participant's Elective Deferrals that exceed 3% of the Participant's Compensation but do not exceed 5% of the Participant's Compensation.
2. [ ] **Traditional enhanced matching contribution** (may not be selected if a QACA). The Employer will contribute an amount equal to the sum of:
   a. [ ] _____% (may not be less than 100%) of the Participant's Elective Deferrals that do not exceed _____% (may not be less than 3%; if over 6% or if left blank, the ACP test will still apply) of the Participant's Compensation, plus
   b. [ ] _____% of the Participant's Elective Deferrals that exceed _____% (must be the same % entered at a.) of the Participant's Compensation but do not exceed _____% (if over 6% or if left blank, the ACP test will still apply) of the Participant's Compensation, plus
   c. [ ] _____% of the Participant's Elective Deferrals that exceed _____% (must be the same % entered at b.) of the Participant's Compensation but do not exceed _____% (if over 6% or if left blank, the ACP test will still apply) of the Participant's Compensation.

   NOTE: a., b. and c. must be completed so that, at any rate of Elective Deferrals, the matching contribution is at least equal to what the matching contribution would be if the Employer were making basic matching contributions (as defined in 27.c.1. above), but the rate of match cannot increase as Elective Deferrals increase. For example, if a. is completed to provide a matching contribution equal to 100% of Elective Deferrals up to 4% of Compensation, then b. and c. need not be completed.
3. [ ] **QACA basic matching contribution.** The Employer will contribute an amount equal to the sum of 100% of a Participant's Elective Deferrals that do not exceed 1% of Participant's Compensation, plus 50% of the Participant's Elective Deferrals that exceed 1% of the Participant's Compensation but do not exceed 6% of the Participant's Compensation.
4. [ ] **QACA enhanced matching contribution.** The Employer will contribute an amount equal to the sum of:
   a. [ ] _____% (may not be less than 100%) of the Participant's Elective Deferrals that do not exceed _____% (may not be less than 1%; if over 6% or if left blank, the ACP test will still apply) of the Participant's Compensation, plus
   b. [ ] _____% of the Participant's Elective Deferrals that exceed _____% (must be the same % entered at a.) of the Participant's Compensation but do not exceed _____% (if over 6% or if left blank, the ACP test will still apply) of the Participant's Compensation, plus
   c. [ ] _____% of the Participant's Elective Deferrals that exceed _____% (must be the same % entered at b.) of the Participant's Compensation but do not exceed _____% (if over 6% or if left blank, the ACP test will still apply) of the Participant's Compensation.

   NOTE: a., b. and c. must be completed so that, at any rate of Elective Deferrals, the matching contribution is at least equal to what the matching contribution would be if the Employer were making QACA basic matching contributions (as defined in 27.c.3. above), but the rate of match cannot increase as Elective Deferrals increase. For example, if a. is completed to provide a matching contribution equal to 100% of Elective Deferrals up to 4% of Compensation, then b. and c. need not be completed.

Determination period. The matching "ADP test safe harbor contribution" above will be applied on the following basis (and Elective Deferrals and any Compensation or dollar limitation used in determining the matching contribution will be based on the applicable period):

5. [ ] the Plan Year
6. [ ] each payroll period
7. [ ] each month
8. [ ] each Plan Year quarter
9. [ ] each payroll unit (e.g., hour)

d. [ ] **Safe harbor nonelective contributions** (select one)

1. [ ] **3% contribution.** The Employer will make a nonelective "ADP test safe harbor contribution" for the Plan Year to the Account of each "eligible Participant" in an amount equal to 3% of each Participant's Compensation.
2. [ ] **Stated contribution.** The Employer will make a nonelective "ADP test safe harbor contribution" to the Account of each "eligible Participant" in an amount equal to _____% (may not be less than 3%) of each Participant's Compensation.
3. [ ] **"Maybe" election.** The Employer may elect to make a nonelective "ADP test safe harbor contribution" after a Plan Year has commenced in accordance with the provisions of Plan Section 12.8(h). If this option d.3. is

selected, the nonelective "ADP test safe harbor contribution" will be required only for a Plan Year for which the Plan is amended to provide for such contribution and the appropriate supplemental notice is provided to Participants.

e. [ ] **Safe harbor contribution to another Plan.** The Employer will make a nonelective or matching "ADP test safe harbor contribution" to another defined contribution plan maintained by the Employer (specify the name of the other plan):

_____.

C. **Excluded Participants.** For purposes of the "ADP test safe harbor contribution," the term "eligible Participant" means any Participant who is eligible to make Elective Deferrals unless otherwise excluded below (leave blank if no exclusions):

f. [ ] Exclusions (select one or more):

1. [ ] Highly Compensated Employees (HCEs). The Employer may, however, make a discretionary "ADP test safe harbor contribution" for the HCEs in a percentage that does not exceed the amount (or in the case of a matching "ADP test safe harbor contribution," the rate) provided to the NHCEs.
2. [ ] Employees who have not satisfied the greatest minimum age and service conditions permitted under Code §410(a) (i.e., age 21 and 1 Year of Service), with the following deemed effective date of participation:
   a. [ ] the earlier of the first day of the first month or the first day of the seventh month of the Plan Year immediately following the date such conditions are satisfied
   b. [ ] the first day of the Plan Year in which the requirements are met
   c. [ ] other: _____ (not later than the earlier of (a) 6 months after such requirements are satisfied, or (b) the first day of the first Plan Year after such requirements are satisfied)
3. [ ] Union Employees (as defined in Plan Section 1.28)
4. [ ] Other: _____ (must be an HCE or an Employee who can be excluded under the permissive or mandatory disaggregation rules of Regulations §§1.401(k)-1(b)(4) and 1.401(m)-1(b)(4); e.g., Employees who have not completed 6 months of service)

D. **Special effective dates** (may be left blank if no special effective dates need to be specified in this Plan)

g. [ ] **Safe harbor provisions (other than QACA).** The "ADP and ACP test safe harbor" provisions are effective for Plan Years beginning on and after: _____ (enter the first day of the Plan Year for which the provisions are effective and, if necessary, enter any other special effective dates that apply with respect to the provisions).

h. [ ] **QACA provisions.** The QACA provisions are effective for Plan Years beginning after: _____ (if this is a PPA restatement and the provisions were effective prior to the Restatement Effective Date, then enter the date such provisions were first effective; may not be earlier than December 31, 2007)

i. [ ] **Other:** _____ (If there are multiple retroactive special effective dates (e.g., for a PPA restatement), complete this Question 27 based on the current Plan provisions and then duplicate this Question 27 and attach as an Appendix to indicate the special retroactive effective dates and provisions that applied.)

E. **Elective Deferrals considered for matching contribution.** If a matching contribution is selected above, then the Plan will disregard a Participant's Elective Deferrals that are made prior to the date the matching contribution component of the Plan is effective with respect to such Participant unless otherwise elected below.

j. [ ] The Plan will include a Participant's Elective Deferrals that are made prior to the date the matching contribution component of the Plan is effective with respect to such Participant.

28. EMPLOYER MATCHING CONTRIBUTIONS (Plan Section 12.1(a)(2)) (skip if matching contributions are NOT selected at Question 12.d.)

If the "ACP test safe harbor" provisions are being used (i.e., Question 27.b. is selected), then the Plan will only take into account Elective Deferrals up to 6% of Compensation in applying the matching contribution set forth below and the maximum discretionary matching contribution that may be made on behalf of any Participant is 4% of Compensation.

A. **Matching formula.**

a. [ ] Employer matching contribution as follows (select 1. or 2.):

1. [ ] **Discretionary.** The Employer may make matching contributions equal to a discretionary percentage, to be determined by the Employer, of the Participant's Elective Deferrals.
   a. [ ] **Discretionary based on business units or location.** The Employer may determine a separate discretionary matching contribution for Participants working in different business units or locations.
2. [ ] **Fixed - uniform rate/amount.** The Employer will make matching contributions equal to _____% (e.g., 50) of the Participant's Elective Deferrals, plus (select a. or leave blank if not applicable):
   a. [ ] an additional matching contribution of a discretionary percentage determined by the Employer,
      1. [ ] but not to exceed _____% of Compensation (leave blank if not applicable)

Matching limit on Elective Deferrals. In determining the Employer matching contribution above, only the following will be matched. Elective Deferrals up to (select 3. OR 4.; leave blank if not applicable):

3. [ ] the percentage or dollar amount specified below (select one or both)
   a. [ ] _____% of a Participant's Compensation.
   b. [ ] $_____.

4. [ ] a discretionary percentage of a Participant's Compensation or a discretionary dollar amount, the percentage or dollar amount to be determined by the Employer on a uniform basis for all Participants.

b. [ ] **Discretionary - tiered.** The Employer may make matching contributions equal to a discretionary percentage of a Participant's Elective Deferrals, to be determined by the Employer, of each tier, to be determined by the Employer. The tiers may be based on the rate of a Participant's Elective Deferrals or Years of Service.

c. [ ] **Fixed - tiered.** The Employer will make matching contributions equal to a uniform percentage of each tier of each Participant's Elective Deferrals, determined as follows:

NOTE: Fill in only percentages or dollar amounts, but not both. If percentages are used, each tier represents the amount of the Participant's applicable contributions that equals the specified percentage of the Participant's Compensation (add additional tiers if necessary):

Tiers of Contributions (indicate $ or %)	Matching Percentage
First _____	_____%
Next _____	_____%
Next _____	_____%
Next _____	_____%

d. [ ] **Fixed - Years of Service.** The Employer will make matching contributions equal to a uniform percentage of each Participant's Elective Deferrals based on the Participant's Years of Service (or Periods of Service if the elapsed time method is selected), determined as follows (add additional tiers if necessary):

Years (or Periods) of Service	Matching Percentage
_____	_____%
_____	_____%
_____	_____%

For purposes of the above matching contribution formula, a Year (or Period) of Service means a Year (or Period) of Service for:

1. [ ] vesting purposes
2. [ ] eligibility purposes

In determining the Employer matching contribution above, only Elective Deferrals up to the percentage or dollar amount specified below will be matched (select all that apply; leave blank if not applicable):

3. [ ] _____% of a Participant's Compensation.
4. [ ] $_____.

e. [ ] Other: _____ (the formula described must satisfy the definitely determinable requirement under Reg. §1.401-1(b). If the formula is non-uniform, it is not a design-based safe harbor for nondiscrimination purposes.)

NOTE: If b., c., d. or e. above is selected, the Plan may violate the Code §401(a)(4) nondiscrimination requirements if the rate of matching contributions increases as a Participant's Elective Deferrals or Years (or Periods) of Service increase.

Maximum matching contribution. The matching contribution made on behalf of any Participant for any Plan Year will not exceed (leave blank if no limit on matching contribution):

f. [ ] $_____.
g. [ ] _____% of Compensation.

B. **Elective Deferrals considered for matching contribution.** The Plan will disregard a Participant's Elective Deferrals that are made prior to the date the matching contribution component of the Plan is effective with respect to such Participant unless otherwise elected below.

h. [ ] The Plan will include a Participant's Elective Deferrals that are made prior to the date the matching contribution component of the Plan is effective with respect to such Participant.

C. **Period of determination.** The matching contribution formula will be applied on the following basis (and Elective Deferrals and any Compensation or dollar limitation used in determining the matching contribution will be based on the applicable period):

i. [ ] the Plan Year
j. [ ] each payroll period
k. [ ] each month
l. [ ] each Plan Year quarter
m. [ ] each payroll unit (e.g., hour)
n. [ ] N/A (Plan only provides for discretionary matching contributions; i.e., a.1. or b. is selected above)

NOTE: For any discretionary match, the Employer will determine the calculation methodology at the time the matching contribution is determined.

D. **QMACs** (Plan Section 1.69). The matching contributions will NOT be Qualified Matching Contributions (QMACs) unless otherwise selected below (leave blank if not applicable).

o. [ ] The matching contributions will be QMACs (fully Vested and subject to restrictions on withdrawals as set forth in the Plan). Such contributions may be used in either the ADP or ACP test.

E. **Allocation conditions** (Plan Section 12.3). Select p. OR q. and all that apply of r. - x. (**Note:** If the "ACP test safe harbor" provisions are being used (Question 27.b.), option p. below (no conditions) must be selected, unless no HCEs are eligible to receive the matching contribution.)

p. [ ] **No conditions.** All Participants share in the allocations regardless of service completed during the Plan Year or employment status on the last day of the Plan Year (skip r. - x.).

q. [ ] **Allocation conditions apply** (select one of 1. - 5. AND one of 6. - 9. below)

Conditions for Participants NOT employed on the last day of the Plan Year.

1. [ ] A Participant must complete more than _____ (not to exceed 500) Hours of Service (or _____ (not to exceed 3) months of service if the elapsed time method is selected).
2. [ ] A Participant must complete a Year of Service (or Period of Service if the elapsed time method is selected). (could cause the Plan to violate coverage requirements under Code §410(b))
3. [ ] Participants will NOT share in the allocations, regardless of service. (could cause the Plan to violate coverage requirements under Code §410(b))
4. [ ] Participants will share in the allocations, regardless of service.
5. [ ] Other: _____ (must be definitely determinable, not subject to Employer discretion and may not require more than one Year of Service (or Period of Service if the elapsed time method is selected))

Conditions for Participants employed on the last day of the Plan Year (options 7., 8. and 9. could cause the Plan to violate coverage requirements under Code §410(b))

6. [ ] No service requirement.
7. [ ] A Participant must complete a Year of Service (or Period of Service if the elapsed time method is selected).
8. [ ] A Participant must complete at least _____ (not to exceed 1,000) Hours of Service during the Plan Year.
9. [ ] Other: _____ (must be definitely determinable, not subject to Employer discretion and may not require more than one Year of Service (or Period of Service if the elapsed time method is selected)).

Waiver of conditions for Participants NOT employed on the last day of the Plan Year. If q.1., 2., 3., or 5. is selected, Participants who are not employed on the last day of the Plan Year in which one of the following events occur will be eligible to share in the allocations regardless of the above conditions (select all that apply; leave blank if none apply):

r. [ ] Death

s. [ ] Total and Permanent Disability

t. [ ] Termination of employment on or after Normal Retirement Age

1. [ ] or Early Retirement Date

Code §410(b) fail-safe. If q.2., 3., 5. and/or q.7., 8. or 9. is selected, the Code §410(b) ratio percentage fail-safe provisions (Plan Section 12.3(f)) will NOT apply unless selected below (leave blank if not applicable or fail-safe will not be used):

u. [ ] The Plan will use the Code §410(b) fail-safe provisions and must satisfy the "ratio percentage test" of Code §410(b).

Conditions based on period other than Plan Year. The allocation conditions above will be applied based on the Plan Year unless otherwise selected below. If selected, the above provisions will be applied by substituting the term Plan Year with the specified period (e.g., if Plan Year quarter is selected below and the allocation condition is 250 Hours of Service per quarter, enter 250 hours (not 1000) at q.8. above). (may not be selected with q.2. or q.7.)

v. [ ] The Plan Year quarter.

w. [ ] Payroll period.

x. [ ] Other: _____ (must be definitely determinable and not subject to Employer discretion and may not be longer than a twelve month period).

F. **Additional matching contributions.** No additional matching contribution may be made unless otherwise selected below (leave blank if not applicable).

y. [ ] Additional matching contributions may be made (e.g., a matching contribution made on a periodic basis as well as a matching contribution based on the end of the Plan Year). Specify the additional matching contribution by attaching an addendum to the Adoption Agreement that duplicates this entire Question 28. If selected, the additional matching contribution applies to all Participants eligible to share in matching contributions except as otherwise specified in the addendum or below.

1. [ ] The additional matching contribution only applies to the following Participants: _____ (must be definitely determinable). (If the additional matching contribution is in lieu of the matching contribution set forth in 28A - E above then use Eligible Employee question to exclude these Participants from such matching contribution.)

G. **True-up contributions.** Under Period of determination above, if j. - m. is selected, does the Employer have the discretion to true-up the Employer matching contribution (i.e., apply the Employer matching contribution on a Plan Year basis)? (leave blank if not applicable).

z. [ ] Yes (may not be elected if the "ADP and/or ACP test safe harbor" provisions are being used).

29. EMPLOYER PROFIT SHARING CONTRIBUTIONS (Plan Section 12.1(a)(3)) (skip Questions 29 and 30 if Employer profit sharing contributions are NOT selected at Question 12.e.)

A. **Profit sharing formula** (c. may be selected in addition to a., b. or d.)

a. [X] **Discretionary.** Discretionary contribution, to be determined by the Employer.

1. [ ] **Discretionary based on business units or location.** The Employer may determine a separate discretionary contribution for Participants working in different business units or locations.

b. [ ] **Fixed.** Fixed contribution equal to _____% of Compensation of Participants eligible to share in allocations.

c. [ ] **Prevailing wage contribution.** The Employer will make a "prevailing wage contribution" on behalf of each Participant who performs services subject to the Service Contract Act, Davis-Bacon Act or similar federal, state, or municipal prevailing wage statutes. The "prevailing wage contribution" will be an amount equal to the remaining balance of the prevailing wage defined bona-fide fringe benefit amount, based on the Participant's employment classification as designated on the appropriate prevailing wage determination, after the application of other prevailing wage defined bona-fide fringe payments. Specify the "prevailing wage contribution" by attaching an appendix to the Adoption Agreement that indicates the contribution rate(s) applicable to the prevailing wage employment/job classification(s). The "prevailing wage contribution" will not be subject to any age or service requirements set forth in Question 14, entry date provisions at Question 15, nor to any service or employment conditions set forth in Question 30 and will be 100% Vested.

Additional "prevailing wage contribution" provisions (select all that apply; leave blank if none apply)

1. [ ] **Offset.** The "prevailing wage contribution" made on behalf of a Participant for a Plan Year will reduce (offset) other Employer contributions allocated or contributed on behalf of such Participant for the Plan.
2. [ ] **Exclude Highly Compensated Employees.** Highly Compensated Employees will be excluded from receiving a "prevailing wage contribution."
3. [ ] **QNEC.** The "prevailing wage contribution" is considered a Qualified Nonelective Contribution (QNEC).

d. [ ] Other: _____ (the formula described must satisfy the definitely determinable requirement under Reg. §1.401-1(b). If the formula is non-uniform, it is not a design-based safe harbor for nondiscrimination purposes.)

B. **Contribution allocations.** If a., b., or d. above is selected, the Employer Nonelective profit sharing contribution for a Plan Year will be allocated as follows:

e. [ ] **INCORPORATION OF CONTRIBUTION FORMULA.** In accordance with the contribution formula specified above (may only be selected if b. or d. above is selected).

f. [ ] **NON-INTEGRATED ALLOCATION**

1. [ ] in the same ratio as each Participant's Compensation bears to the total of such Compensation of all Participants
2. [ ] in the same dollar amount to all Participants (per capita)
3. [ ] in the same dollar amount per Hour of Service completed by each Participant
4. [ ] in the same proportion that each Participant's points bears to the total of such points of all Participants. A Participant's points with respect to any Plan Year will be computed as follows (select all that apply):

a. [ ] _____ point(s) will be allocated for each Year of Service (or Period of Service).
However, the maximum Years (or Periods if elapsed time method is selected) of Service taken into account will not exceed:

1. [ ] _____ (leave blank if no limit on service applies).

Year of Service (or Period of Service if applicable), means:

2. [ ] service for eligibility purposes
3. [ ] service for vesting purposes

b. [ ] _____ point(s) will be allocated for each full $_____ (may not exceed $200) of Compensation

c. [ ] _____ point(s) will be allocated for each year of age as of the last day of the Plan Year

g. [ ] **INTEGRATED (PERMITTED DISPARITY) ALLOCATION**

In accordance with Plan Section 4.3(b)(2) based on a Participant's Compensation in excess of:

1. [ ] the Taxable Wage Base
2. [ ] _____% (not to exceed 100%) of the Taxable Wage Base (see Note below)
3. [ ] 80% of the Taxable Wage Base plus $1.00
4. [ ] $_____ (not greater than the Taxable Wage Base) (see Note below)

NOTE: The integration percentage of 5.7% will be reduced to:

1. 4.3% if 2. or 4. above is more than 20% and less than or equal to 80% of the Taxable Wage Base.

2. 5.4% if 3. is selected or if 2. or 4. above is more than 80% of the Taxable Wage Base.

h. [X] **NON-SAFE HARBOR ALLOCATION METHODS**

1. [X] **Grouping method.** Pursuant to Plan Section 4.3(b)(3)(vi), the classifications are (select a. or b.):

a. [X] Each Participant constitutes a separate classification.

b. [ ] Participants will be divided into the following classifications with the allocation methods indicated under each classification.

Definition of classifications. Define each classification and specify the method of allocating the contribution among members of each classification. Classifications specified below must be clearly defined in a manner that will not violate the definitely determinable allocation requirement of Regulation §1.401-1(b)(1)(ii). The design of the groups cannot be such that the only NHCEs benefiting under the Plan are those with the lowest amount of Compensation and/or the shortest periods of service and who may represent the minimum number of these Employees necessary to satisfy coverage under Code §410(b).

Classification A will consist of _____
The allocation method will be: [ ] pro rata based on Compensation
[ ] equal dollar amounts (per capita)

Classification B will consist of _____
The allocation method will be: [ ] pro rata based on Compensation
[ ] equal dollar amounts (per capita)

Classification C will consist of _____
The allocation method will be: [ ] pro rata based on Compensation
[ ] equal dollar amounts (per capita)

Classification D will consist of _____
The allocation method will be: [ ] pro rata based on Compensation
[ ] equal dollar amounts (per capita)

Additional classifications: _____ (specify the classifications and which of the above allocation methods (pro rata or per capita) will be used for each classification).

NOTE: In the case of Self-Employed Individuals (i.e., sole proprietors or partners), the requirements or Regulation §1.401(k)-1(a)(6) continue to apply and the allocation method should not be such that a cash or deferred election is created for a Self-Employed Individual as a result of application of the allocation method.

NOTE: If more than four (4) classifications, the additional classifications and allocation methods may be attached as an addendum to the Adoption Agreement or may be entered under Additional Classifications above.

Determination of applicable group. If a Participant shifts from one classification to another during a Plan Year, then unless selected below, the Participant is in a classification based on the Participant's status as of the last day of the Plan Year, or if earlier, the date of termination of employment. If selected below, the Administrator will apportion the Participant's allocation during a Plan Year based on the following:

1. [ ] Beginning of Plan Year. The classification will be based on the Participant's status as of the beginning of the Plan Year.
2. [ ] Months in each classification. Pro rata based on the number of months the Participant spent in each classification.
3. [ ] Days in each classification. Pro rata based on the number of days the Participant spent in each classification.
4. [ ] One classification only. The Employer in a nondiscriminatory manner will direct the Administrator to place the Participant in only one classification for the entire Plan Year during which the shift occurs.

2. [ ] **Age-weighted method.** The Schedule of Age-Weighted Allocation Factors is set forth in attached Exhibit A (which is hereby incorporated by reference and made a part of the Plan) and will be based on the following interest rate (if no selection is made, c. will be deemed to have been selected):

a. [ ] 7.5% interest
b. [ ] 8.0% interest
c. [ ] 8.5% interest

3. [ ] **Other:** _____ (the formula described must satisfy the definitely determinable requirement under Reg. §1.401-1(b). If the formula is non-uniform, it is not a design-based safe harbor for nondiscrimination purposes.)

30. ALLOCATION CONDITIONS (Plan Section 12.3). Requirements to share in allocations of Employer Nonelective profit sharing contributions and QNECs (as permitted by Plan Section 12.1(a)(4)) (select a. OR b. and all that apply of c. - f.)

a. [ ] **No conditions.** All Participants share in the allocations regardless of service completed during the Plan Year or employment status on the last day of the Plan Year (skip to Question 31).

b. [X] **Allocation conditions apply** (select one of 1. - 5. AND one of 6. - 9. below)

Conditions for Participants NOT employed on the last day of the Plan Year

1. [ ] A Participant must complete more than _____ (not to exceed 500) Hours of Service (or _____ (not to exceed 3) months of service if the elapsed time method is selected).
2. [ ] A Participant must complete a Year of Service (or Period of Service if the elapsed time method is selected). (could cause the Plan to violate coverage requirements under Code §410(b))
3. [X] Participants will NOT share in the allocations, regardless of service. (could cause the Plan to violate coverage requirements under Code §410(b))
4. [ ] Participants will share in the allocations, regardless of service.
5. [ ] Other: _____ (must be definitely determinable, not subject to Employer discretion and may not require more than one Year of Service (or Period of Service if the elapsed time method is selected)).

Conditions for Participants employed on the last day of the Plan Year (options 7., 8. and 9. could cause the Plan to violate coverage requirements under Code §410(b))

6. [ ] No service requirement.
7. [X] A Participant must complete a Year of Service (or Period of Service if the elapsed time method is selected).
8. [ ] A Participant must complete at least _____ (not to exceed 1,000) Hours of Service during the Plan Year.
9. [ ] Other: _____ (must be definitely determinable, not subject to Employer discretion and may not require more than one Year of Service (or Period of Service if the elapsed time method is selected)).

Waiver of conditions for Participants NOT employed on the last day of the Plan Year. If b.1., 2., 3., or 5. is selected, Participants who are not employed on the last day of the Plan Year in which one of the following events occur will be eligible to share in the allocations regardless of the above conditions (select all that apply; leave blank if none apply):

c. [X] Death
d. [X] Total and Permanent Disability
e. [X] Termination of employment on or after Normal Retirement Age
   1. [ ] or Early Retirement Date

Code §410(b) fail-safe. If b.2., 3., 5. and/or b.7., 8. or 9. is selected, the Code §410(b) ratio percentage fail-safe provisions will NOT apply (Plan Section 4.3(m)) unless selected below (leave blank if not applicable or fail-safe will not be used):

f. [ ] The Plan will use the Code §410(b) fail-safe provisions and must satisfy the ratio percentage test of Code §410(b).

31. FORFEITURES (Plan Sections 1.37 and 4.3(e))

Except as provided in Plan Section 1.37, a Forfeiture will occur:

a. [ ] N/A (may only be selected if all contributions are fully Vested (default provisions at Plan Section 4.3(e) apply); skip to Question 32)
b. [X] As of the earlier of (1) the last day of the Plan Year in which the former Participant incurs five (5) consecutive 1-Year Breaks in Service, or (2) the distribution of the entire Vested portion of the Participant's Account.
c. [ ] As of the last day of the Plan Year in which the former Participant incurs five (5) consecutive 1-Year Breaks in Service.

NOTE: (1) Forfeitures are disposed of in accordance with Employer direction that is consistent with Section 4.3(e).
(2) Effective for Plan Years beginning after the Plan Year in which this Plan document is adopted, Forfeitures may not be used to reduce Employer contributions which are required pursuant to the Code to be fully Vested when contributed to the Plan (such as QMACs, QNECs and "ADP test safe harbor contributions" other than QACA "ADP test safe harbor contributions"). The reallocation of Forfeitures could affect the Plan's top-heavy exemption (see Plan Section 12.8(f)). One approach to avoid this result is to provide for a discretionary matching contribution that satisfies the "ACP test safe harbor" provisions (i.e., select Question 27A.b. and select a discretionary matching contribution at Question 28) and then allocate Forfeitures as a matching contribution.

32. ALLOCATION OF EARNINGS (Plan Section 4.3(c))

Allocation of earnings with respect to amounts which are not subject to Participant investment direction and which are contributed to the Plan after the previous Valuation Date will be determined:

a. [X] N/A. (all assets in the Plan are subject to Participant investment direction)
b. [ ] by using a weighted average based on the amount of time that has passed between the date a contribution or distribution is made and the prior Valuation Date
c. [ ] by treating one-half of all such contributions as being a part of the Participant's nonsegregated Account balance as of the previous Valuation Date
d. [ ] by using the method specified in Plan Section 4.3(c) (balance forward method)
e. [ ] other: _____ (must be a definite predetermined formula that is not based on Compensation, that satisfies the nondiscrimination requirements of Regulation §1.401(a)(4)-4, and that is applied uniformly to all Participants)

33. TOP-HEAVY MINIMUM ALLOCATION
The minimum allocation requirements for any Top-Heavy Plan Year will be applied only to Non-Key Employee Participants unless selected below:
a. [ ] The Top-Heavy minimum will be provided to both Key and Non-Key Employee Participants.

DISTRIBUTIONS

34. FORM OF DISTRIBUTIONS (Plan Sections 6.5 and 6.6)
Distributions under the Plan may be made in (select all that apply; must select at least one from a. - e. unless g. is selected below)
a. [X] lump-sums
b. [X] substantially equal installments
c. [X] partial withdrawals, provided the minimum withdrawal is $ 1,000 (leave blank if no minimum)
d. [ ] partial withdrawals or installments are only permitted for Participants or Beneficiaries who must receive required minimum distributions under Code §401(a)(9) except for the following (e.g., partial is not permitted for death benefits; leave blank if no exceptions):
1. [ ] _____
e. [ ] other: _____ (must be definitely determinable and not subject to Employer discretion)

NOTE: Regardless of the above, a Participant is not required to request a withdrawal of his or her total Account for an in-service distribution, a hardship distribution, or a distribution from the Participant's Rollover Account.

Annuities. Is the annuity form of distribution the normal form of distribution?

NOTE: If this Plan includes transferred pension assets, f.1. or g. below must be selected.

f. [X] **Annuities are not allowed or are not the normal form of distribution** (except as indicated below). Plan Section 6.13(b) will apply and the joint and survivor rules of Code §§401(a)(11) and 417 will not apply to the Plan.

Special rules. An annuity form of distribution is available to certain Participants and/or with respect to only a portion of the Plan assets according to the following: (select all that apply)
1. [ ] **Pension assets.** Annuities are the normal form of distribution for assets that are transferred pension assets (Plan Section 6.13(a)).
2. [ ] **Annuity selected by Participant.** Plan Section 6.13(c) will apply and the joint and survivor rules of Code §§401(a)(11) and 417 will apply only if an annuity form of distribution is selected by a Participant.

However, the Participant may only select an annuity distribution according to the following:
a. [ ] _____ (leave blank if no conditions apply).

g. [ ] **Annuities are the normal form of distribution.** The qualified Joint and Survivor Annuity and Qualified Pre-Retirement Survivor Annuity provisions apply (Plan Section 6.13 will not apply and the joint and survivor rules of Code §§401(a)(11) and 417 will automatically apply).

Pre-Retirement Survivor Annuity
If the Plan permits an annuity form of payment under option f.1. or g. above, the Pre-Retirement Survivor Annuity (minimum Spouse's death benefit) will be equal to 50% of a Participant's interest in the Plan unless a different percentage is selected below (leave blank if default applies)
h. [ ] 100% of a Participant's interest in the Plan.
i. [ ] _____% (may not be less than 50%) of a Participant's interest in the Plan.

Cash or property. Distributions may be made in:
j. [ ] cash only, except for (select all that apply; leave blank if none apply):
1. [ ] insurance Contracts
2. [ ] annuity Contracts
3. [ ] Participant loans
4. [ ] property in an open brokerage window or similar arrangement
k. [X] cash or property, except that the following limitation(s) apply: (leave blank if there are no limitations on property distributions):
1. [ ] _____

35. CONDITIONS FOR DISTRIBUTIONS UPON SEVERANCE OF EMPLOYMENT. Distributions upon severance of employment pursuant to Plan Section 6.4(a) will not be made unless the following conditions have been satisfied:

A. **Accounts in excess of $5,000**
a. [X] Distributions may be made as soon as administratively feasible following severance of employment.
b. [ ] Distributions may be made as soon as administratively feasible after the Participant has incurred _____ 1-Year Break(s) in Service (or Period(s) of Severance if the elapsed time method is selected).
c. [ ] Distributions may be made as soon as administratively feasible after the last day of the Plan Year coincident with or next following severance of employment.
d. [ ] Distributions may be made as soon as administratively feasible after the last day of the Plan Year quarter coincident with or next following severance of employment.

e. [ ] Distributions may be made as soon as administratively feasible after the Valuation Date coincident with or next following severance of employment.
f. [ ] Distributions may be made as soon as administratively feasible after _____ months have elapsed following severance of employment.
g. [ ] No distributions may be made until a Participant has reached Early or Normal Retirement Date.
h. [ ] Other: _____ (must be objective conditions which are ascertainable and are not subject to Employer discretion except as otherwise permitted in Regulation §1.411(d)-4 and may not exceed the limits of Code §401(a)(14) as set forth in Plan Section 6.7)

B. **Accounts of $5,000 or less**
i. [X] Same as above
j. [ ] Distributions may be made as soon as administratively feasible following severance of employment.
k. [ ] Distributions may be made as soon as administratively feasible after the Participant has incurred _____ 1-Year Break(s) in Service (or Period(s) of Severance if the elapsed time method is selected).
l. [ ] Distributions may be made as soon as administratively feasible after the last day of the Plan Year coincident with or next following severance of employment.
m. [ ] Other: _____ (must be objective conditions which are ascertainable and are not subject to Employer discretion except as otherwise permitted in Regulation §1.411(d)-4 and may not exceed the limits of Code §401(a)(14) as set forth in Plan Section 6.7)

C. **Timing after initial distributable event.** If a distribution is not made in accordance with the above provisions upon the occurrence of the distributable event, then a Participant may elect a subsequent distribution at any time after the time the amount was first distributable (assuming the amount is still distributable), unless otherwise selected below (may not be selected with 35.g. and 35.i.):
n. [ ] Other: _____ (e.g., a subsequent distribution request may only be made in accordance with l. above (i.e., the last day of another Plan Year); must be objective conditions which are ascertainable and are not subject to Employer discretion except as otherwise permitted in Regulation §1.411(d)-4 and may not exceed the limits of Code §401(a)(14) as set forth in Plan Section 6.7)

D. **Participant consent (i.e., involuntary cash-outs).** Should Vested Account balances less than a certain dollar threshold be automatically distributed without Participant consent (mandatory distributions)?

NOTE: The Plan provides that distributions of amounts of $5,000 or less do not require spousal consent and are only paid as lump-sums.
o. [ ] No, Participant consent is required for all distributions.
p. [X] Yes, Participant consent is required only if the distribution is over:
1. [X] $5,000
2. [ ] $1,000
3. [ ] $_____ (less than $1,000)

NOTE: If 2. or 3. is selected, rollovers will be included in determining the threshold for Participant consent.

Automatic IRA rollover. With respect to mandatory distributions of amounts that are $1,000 or less, if a Participant makes no election, the amount will be distributed as a lump-sum unless selected below.
4. [ ] If a Participant makes no election, then the amount will be automatically rolled over to an IRA provided the amount is at least $_____ (e.g., $200).

E. **Rollovers in determination of $5,000 threshold.** Unless otherwise elected below, amounts attributable to rollover contributions (if any) will be **included** in determining the $5,000 threshold for timing of distributions, form of distributions or consent rules.
q. [X] Exclude rollovers (rollover contributions will be **excluded** in determining the $5,000 threshold)

NOTE: Regardless of the above election, if the Participant consent threshold is $1,000 or less, then the Administrator must include amounts attributable to rollovers for such purpose. In such case, an election to exclude rollovers above will apply for purposes of the timing and form of distributions.

F. **Mandatory distribution at Normal Retirement Age.** Regardless of the above elections other than any mandatory distributions provided for in p. above, unless otherwise selected below, a Participant who has severed employment may elect to delay a distribution beyond the later of age 62 or the Participant's Normal Retirement Age (subject to Plan Section 6.8).
r. [X] A Participant who has severed employment may not elect to delay a distribution beyond the later of age 62 or the Participant's Normal Retirement Age.

36. DISTRIBUTIONS UPON DEATH (Plan Section 6.8(b)(2))
Distributions upon the death of a Participant prior to the "required beginning date" will:
a. [X] be made pursuant to the election of the Participant or "designated Beneficiary"
b. [ ] begin within 1 year of death for a "designated Beneficiary" and be payable over the life (or over a period not exceeding the "life expectancy") of such Beneficiary, except that if the "designated Beneficiary" is the Participant's Spouse, begin prior to December 31st of the year in which the Participant would have attained age 70 1/2

c. [ ] be made within 5 (or if lesser _____) years of death for all Beneficiaries
d. [ ] be made within 5 (or if lesser _____) years of death for all Beneficiaries, except that if the "designated Beneficiary" is the Participant's Spouse, begin prior to December 31st of the year in which the Participant would have attained age 70 1/2 and be payable over the life (or over a period not exceeding the "life expectancy") of such "surviving Spouse"

NOTE: The elections above must be coordinated with the Form of distributions (e.g., if the Plan only permits lump-sum distributions, then options a., b. and d. would not be applicable).

37. HARDSHIP DISTRIBUTIONS (Plan Sections 6.12 and/or 12.10)
a. [ ] Hardship distributions are NOT permitted (skip to Question 38).
b. [X] Hardship distributions are permitted from the following Participant Accounts:
1. [X] all Accounts
2. [ ] only from the following Accounts (select one or more):
a. [ ] Pre-Tax Elective Deferral Account
b. [ ] Roth Elective Deferral Account
c. [ ] Account(s) attributable to Employer matching contributions
d. [ ] Account attributable to Employer Nonelective profit sharing contributions
e. [ ] Rollover Account
f. [ ] Transfer Account (other than amounts attributable to a money purchase pension plan)
g. [ ] Other: _____ (specify Account(s) and conditions in a manner that is definitely determinable and not subject to Employer discretion)

NOTE: Distributions from a Participant's Elective Deferral Account are limited to the portion of such Account attributable to such Participant's Elective Deferrals (and earnings attributable thereto up to December 31, 1988). Hardship distributions are NOT permitted from a Participant's Qualified Nonelective Contribution Account, Qualified Matching Contribution Account, Accounts attributable to "ADP test safe harbor contributions" or Transfer Account attributable to pension assets (e.g., from a money purchase pension plan).

Additional limitations. The following limitations apply to hardship distributions:
3. [ ] N/A (no additional limitations)
4. [X] Additional limitations (select one or more):
a. [X] The minimum amount of a distribution is $ 1,000 (may not exceed $1,000).
b. [ ] No more than _____ distribution(s) may be made to a Participant during a Plan Year.
c. [X] Distributions may only be made from Accounts which are fully Vested.
d. [ ] A Participant does not include a Former Employee at the time of the hardship distribution.
e. [ ] Hardship distributions may be made subject to the following provisions: _____ (must be definitely determinable and not subject to Employer discretion).

Beneficiary Hardship. Hardship distributions for Beneficiary expenses are NOT allowed unless otherwise selected below.
5. [ ] Hardship distributions for expenses of Beneficiaries are allowed
Special effective date (may be left blank if effective date is same as the Plan or Restatement Effective Date; select a. and, if applicable, b.)
a. [ ] effective as of _____ (if this is a PPA restatement and the provisions were effective prior to the Restatement Effective Date, then enter the date such provisions were first effective; may not be earlier than August 17, 2006)
b. [ ] eliminated effective as of _____.

Safe harbor hardship rules. Will the safe harbor hardship rules of Plan Section 12.10 apply to hardship distributions from all Accounts?
6. [X] Yes. The provisions of Plan Section 12.10 apply to all hardship distributions.
7. [ ] No. The provisions of Plan Section 6.12 apply to hardship distributions from all Accounts other than a Participant's Elective Deferral Account.
8. [ ] No. The provisions of Plan Section 6.12 apply to all hardship distributions.

38. IN-SERVICE DISTRIBUTIONS (Plan Section 6.11)
a. [ ] In-service distributions are NOT permitted (except as otherwise selected for Hardship Distributions).
b. [X] In-service distributions may be made to a Participant who has not separated from service provided any of the following conditions have been satisfied (select one or more):
1. [X] Age
a. [X] the Participant has attained age 59 1/2
b. [ ] the Participant has reached Normal Retirement Age
2. [ ] the Participant has been a Participant in the Plan for at least _____ years (may not be less than five (5))
3. [ ] the amounts being distributed have accumulated in the Plan for at least 2 years
4. [ ] other: _____ (must satisfy the definitely determinable requirement under Regulations §401-1(b); may not be subject to Employer discretion; must be nondiscriminatory; and must be limited to a combination of items b.1. – b.3. or a Participant's disability)

More than one condition. If more than one condition is selected above, then a Participant only needs to satisfy one of the conditions, unless selected below:

5. [ ] A Participant must satisfy each condition

NOTE: Regardless of any elections above, distributions from a Participant's Elective Deferral Account, Qualified Matching Contribution Account, Qualified Nonelective Contribution Account and Accounts attributable to "ADP test safe harbor contributions" are subject to restrictions and generally may not be distributed prior to age 59 1/2. Distributions from a Transfer Account attributable to a money purchase pension plan are not permitted prior to age 62.

Account restrictions. In-service distributions are permitted from the following Participant Accounts:

6. [X] all Accounts
7. [ ] only from the following Accounts (select one or more):
   a. [ ] Pre-Tax Elective Deferral Account
   b. [ ] Roth Elective Deferral Account
   c. [ ] Account(s) attributable to Employer matching contributions (includes matching "ADP test safe harbor contributions")
   d. [ ] Account attributable to Employer Nonelective profit sharing contributions
   e. [ ] Qualified Nonelective Contribution Account (includes nonelective "ADP test safe harbor contributions")
   f. [ ] Rollover Account
   g. [ ] Transfer Account attributable to (select one or both):
      1. [ ] non-pension assets
      2. [ ] pension assets (e.g., from a money purchase pension plan)
   h. [ ] Other: _____ (specify Account(s) and conditions in a manner that is definitely determinable and not subject to Employer discretion)

Limitations. The following limitations apply to in-service distributions:

8. [ ] N/A (no additional limitations)
9. [X] Additional limitations (select one or more):
   a. [X] The minimum amount of a distribution is $ 1,000 (may not exceed $1,000).
   b. [ ] No more than _____ distribution(s) may be made to a Participant during a Plan Year.
   c. [X] Distributions may only be made from Accounts which are fully Vested.
   d. [X] Distributions from the Roth Elective Deferral Account (38.b.6. or 38.b.7.b. selected), may only be made if the distribution is a "qualified distribution."
   e. [ ] In-service distributions may be made subject to the following provisions: _____ (must be definitely determinable and not subject to discretion).

39. AGE 62 IN-SERVICE DISTRIBUTIONS FOR TRANSFERRED MONEY PURCHASE ASSETS (Plan Section 6.11)
In-service distributions at age 62 will NOT be allowed (except as otherwise permitted under the Plan without regard to this provision) unless selected below (applies only for Transfer Accounts from a money purchase pension plan):

a. [ ] In-service distributions will be allowed for Participants at age 62.
Special effective date. If this is a PPA restatement and the provision applied other than as of the first day of the 2007 Plan Year, then enter the date such provision was first effective: (leave blank if not applicable)
   1. [ ] _____ (may not be earlier than the first day of the 2007 Plan Year).

Limitations. The following limitations apply to these in-service distributions:

2. [ ] The Plan already provides for in-service distributions and the restrictions set forth in the Plan (e.g., minimum amount of distributions or frequency of distributions) are applicable to in-service distributions at age 62.
3. [ ] N/A (no limitations)
4. [ ] The following elections apply to in-service distributions at age 62 (select one or more):
   a. [ ] The minimum amount of a distribution is $_____ (may not exceed $1,000).
   b. [ ] No more than _____ distribution(s) may be made to a Participant during a Plan Year.
   c. [ ] Distributions may only be made from Accounts which are fully Vested.
   d. [ ] In-service distributions may be made subject to the following provisions: _____ (must be definitely determinable and not subject to discretion).

40. IN-PLAN ROTH ROLLOVER CONTRIBUTIONS (Plan Section 12.11) (skip if Roth Elective Deferrals NOT selected at Question 12.b.1.)

a. [X] In-Plan Roth rollover contributions are NOT permitted (skip to Question 41).
b. [ ] In-Plan Roth rollover contributions are permitted according to the following provisions.
Special effective date. (may be left blank if same as Plan or Restatement Effective Date)
   1. [ ] _____ (if this is a PPA restatement and the provisions were effective prior to the Restatement Effective Date, then enter the date such provisions were first effective; may not be earlier than September 28, 2010)

Eligibility and type of rollover. Any Participant may elect an in-Plan Roth rollover contribution by direct rollover except as selected below (select all that apply; leave blank if none apply):

c. [ ] **In-service distribution only.** Only Participants who are Employees may elect an in-Plan Roth rollover contribution. (if not selected, Terminated Participants may make an in-Plan Roth rollover contribution but only when entitled to an actual cash distribution)

d. [ ] **No transfer of loans.** Loans may not be distributed as part of an in-Plan Roth rollover contribution. (if not selected, **any loans may be transferred)**

In-service distribution provisions. The Employer elects the following regarding in-service distributions from the Plan solely for purposes of making an in-Plan Roth rollover contribution:

e. [ ] N/A (Plan's existing in-service distribution provisions apply) (may only be selected if Plan permits in-service distributions; skip to Question 41)

f. [ ] In-service distribution provisions. The Employer elects to permit in-service distributions as follows solely for purposes of making an in-Plan Roth rollover contribution (select one or more):

1. [ ] the Participant has attained age _____
2. [ ] the Participant has _____ months of participation (specify minimum of 60 months)
3. [ ] the amounts being distributed have accumulated in the Plan for at least _____ years (at least 2)
4. [ ] other (describe): _____ (must satisfy the definitely determinable requirement under Regulations §401-1(b); may not be subject to Employer discretion; must be nondiscriminatory; and must be limited to a combination of items f.1. – f.3. or a Participant's disability)

More than one condition. If more than one condition is selected above, then a Participant only needs to satisfy one of the conditions, unless selected below:

5. [ ] A Participant must satisfy each condition

NOTE: Regardless of any election above to the contrary, in-Plan Roth rollover contributions are not permitted from a Participant's Elective Deferral Account, Qualified Matching Contribution Account, Qualified Nonelective Contribution Account and Accounts attributable to "ADP test safe harbor contributions" prior to age 59 1/2. Distributions from a Transfer Account attributable to a money purchase pension plan are not permitted prior to age 62.

Source of in-Plan Roth rollover contribution. Plan permits a direct rollover from the following qualifying sources:

6. [ ] all Accounts
7. [ ] only from the following qualifying sources (select one or more):
   a. [ ] Pre-Tax Elective Deferral Account
   b. [ ] Account(s) attributable to Employer matching contributions (includes any matching "ADP test safe harbor contributions")
   c. [ ] Account attributable to Employer Nonelective profit sharing contributions
   d. [ ] Qualified Nonelective Contribution Account (includes any nonelective "ADP test safe harbor contributions")
   e. [ ] Rollover Account
   f. [ ] Transfer Account
   g. [ ] Other: _____ (specify Account(s) and conditions in a manner that is definitely determinable and not subject to Employer discretion; e.g., a Participant's Pre-Tax Deferral Account or Matching Contribution Account, but not the Participant's Nonelective Contribution Account)

Other limitations on direct in-Plan Roth rollover contribution (leave blank if none apply)

8. [ ] The following limitations apply (select one or more):
   a. [ ] The minimum amount that may be rolled over is $_____ (may not exceed $1,000).
   b. [ ] Distributions may only be made from Accounts which are fully Vested.
   c. [ ] In-service distributions may be made subject to the following provisions: _____ (describe - must be definitely determinable and not subject to discretion).

Withholding. If the Plan does not permit an actual distribution upon the event triggering the right to elect the in-Plan Roth rollover contribution, then a Participant may not elect to have a portion of the amount that may be distributed as an in-Plan Roth rollover contribution distributed for tax withholding purposes unless selected below (leave blank if not applicable):

9. [ ] **Distribution for withholding.** A Participant may elect to have a portion of the amount that may be distributed as an in-Plan Roth rollover contribution distributed solely for purposes of federal or state income tax withholding related to the in-Plan Roth rollover contribution.

41. QUALIFIED RESERVIST DISTRIBUTIONS (Plan Section 6.18)

a. [ ] Qualified reservist distributions are NOT permitted

b. [X] Qualified reservist distributions are permitted

Special effective date (may be left blank if same as Plan or Restatement Effective Date)

1. [ ] _____ (if this is a PPA restatement and the provisions were effective prior to the Restatement Effective Date, then enter the date such provisions were first effective; may not be earlier than September 12, 2001)

42. HEART ACT PROVISIONS (Plan Section 6.18)
Continued benefit accruals.
a. [ ] Continued benefit accruals will NOT apply
b. [X] Continued benefit accruals will apply

Special effective date. If this is a PPA restatement and the provision applied other than as of the first day of the 2007 Plan Year, then enter the date such provision was first effective: (leave blank if not applicable)
c. [ ] _____ (may not be earlier than the first day of the 2007 Plan Year)

Distributions for deemed severance of employment
d. [X] The Plan does NOT permit distributions for deemed severance of employment
e. [ ] The Plan permits distributions for deemed severance of employment
Special effective date (may be left blank if same as Plan or Restatement Effective Date)
1. [ ] _____ (if this is a PPA restatement and the provisions were effective prior to the Restatement Effective Date, then enter the date such provisions were first effective; may not be earlier than January 1, 2007)

NONDISCRIMINATION TESTING

43. HIGHLY COMPENSATED EMPLOYEE (Plan Section 1.41)
Top-Paid Group election and calendar year data election are not used unless selected below (the selections made for the latest year will continue to apply to subsequent Plan Years unless the Plan is amended) (select all that apply; leave blank if none apply):
a. [ ] **Top-Paid Group election** will be used.
b. [ ] **Calendar year data election** will be used (only applicable to non-calendar year Plan Year).

44. ADP AND ACP TESTS (Plan Sections 12.4 and 12.6)
NOTE: The selections made below for the latest year will continue to apply to subsequent Plan Years unless the Plan is amended. Also, the prior method will not apply if the Employer uses the discretionary nonelective "ADP test safe harbor contribution" described in Section 12.8(h) or if the Plan is amended during a Plan Year to eliminate an "ADP test safe harbor contribution."

ADP test. If applicable, the ADP ratio for NHCEs will be based on the current year ratio unless prior year testing method is selected below (leave blank if current year testing method is being used):
a. [ ] **Prior year testing method.** The prior year ratio will be used. If this selection is made for the first year the Code §401(k) feature is added to this Plan (unless this Plan is a successor plan), then for the first Plan Year only, the amount taken into account as the ADP of Nonhighly Compensated Employees for the preceding Plan Year will be the greater of 3% or the actual percentage for the initial Plan Year.

ACP test. If applicable, the ACP ratio for NHCEs will be based on the current year ratio unless prior year testing method is selected below (leave blank if current year testing method is being used):
b. [ ] **Prior year testing method.** The prior year ratio will be used. If this selection is made for the first year the Code §401(m) feature is added to this Plan (unless this Plan is a successor plan), then for the first Plan Year only, the amount taken into account as the ACP of NHCEs for the preceding Plan Year will be the greater of 3% or the actual percentage for the initial Plan Year.

Effective dates. (optional)
c. [ ] **Current year testing method.** If the current year testing method is currently being used, enter the date it was first effective (used for purposes of applying the five year restriction on amending to the prior year testing method):
1. [ ] ADP test: _____ (may not be selected with 44.a.)
2. [ ] ACP test: _____ (may not be selected with 44.b.)

MISCELLANEOUS

45. LOANS TO PARTICIPANTS (Plan Section 7.6)
a. [ ] New loans are NOT permitted.
b. [X] New loans are permitted.

NOTE: Regardless of whether new loans are permitted, if the Plan permits rollovers, then the Administrator may, in a uniform and nondiscriminatory manner, accept rollovers of loans into this Plan.

46. ROLLOVERS (Plan Section 4.6) (skip if rollover contributions are NOT selected at 12.f.)
Eligibility. Rollovers may be accepted from all Participants who are Employees as well as the following (select all that apply; leave blank if not applicable):
a. [X] Any Eligible Employee, even prior to meeting eligibility conditions to be a Participant
b. [ ] Participants who are Former Employees

Distributions. When may distributions be made from a Participant's Rollover Account?
c. [X] At any time

d. [ ] Only when the Participant is otherwise entitled to a distribution under the Plan

47. AFTER-TAX VOLUNTARY EMPLOYEE CONTRIBUTIONS (Plan Section 4.8) (skip if after-tax voluntary Employee contributions NOT selected at Question 12.g.)
Matching after-tax voluntary Employee contributions. There are no Employer matching contributions on after-tax voluntary Employee contributions unless elected below.
a. [ ] After-tax voluntary Employee contributions are aggregated with Elective Deferrals for purposes of applying any matching contributions under the Plan.

PPA TRANSITION RULES

The following questions only apply if this is a PPA restatement (i.e., Question 5.b.1. is selected). If this is not a PPA restatement, then this Plan will not be considered an individually designed plan merely because the following questions are deleted from the Adoption Agreement.

NOTE: The following provisions are designed to be left unanswered if the selections do not apply to the Plan.

48. PRIOR VESTING SCHEDULE FOR EMPLOYER NONELECTIVE PROFIT SHARING CONTRIBUTIONS. The vesting schedule for amounts attributable to Employer Nonelective profit sharing contributions made prior to Plan Years beginning after December 31, 2006, is (leave blank if not applicable):
a. [ ] _____ (enter the vesting schedule that applied prior to the Plan Year beginning in 2007; such schedule must satisfy 5-year cliff or 7-year graded and, if applicable, must provide for a top-heavy minimum schedule)

49. WRERA - RMD WAIVERS FOR 2009 (Plan Section 6.8(f))
Suspension/continuation of RMDs. Unless otherwise elected below, required minimum distributions (RMDs) for 2009 were suspended unless a Participant or Beneficiary elected to receive such distributions:
a. [ ] RMDs for 2009 were suspended for any Participant or Beneficiary who was scheduled to receive his/her first RMD for 2009 or who did not make a continuing election prior to 2009 to receive his/her RMD (unless the Participant or Beneficiary made an election to receive such distribution). RMDs for 2009 were continued for any Participant or Beneficiary who had made a continuing election to receive an RMD prior to 2009 (unless the Participant or Beneficiary made an election to suspend such distribution).
b. [ ] RMDs continued unless otherwise elected by a Participant or Beneficiary.
c. [ ] RMDs continued in accordance with the terms of the Plan (i.e., no election available to Participants or Beneficiaries).
d. [ ] Other: _____

Direct rollovers. The Plan also treated the following as "eligible rollover distributions" in 2009 (If no election is made, then a "direct rollover" was only offered for "2009 RMDs"):
e. [ ] "2009 RMDs" and "Extended 2009 RMDs."
f. [ ] "2009 RMDs" but only if paid with an additional amount that is an "eligible rollover distribution" without regard to Code §401(a)(9)(H).

50. NON-SPOUSAL ROLLOVERS (Plan Section 6.15(d)). Non-spousal rollovers are permitted effective for distributions after December 31, 2006 unless an alternative effective date is selected at a. below:
a. [ ] Non-spousal rollovers are allowed effective _____ (may not be earlier than January 1, 2007 and not later than January 1, 2010; the Plan already provides for non-spousal rollovers effective as of January 1, 2010)

The adopting Employer may rely on an advisory letter issued by the Internal Revenue Service as evidence that the Plan is qualified under Code §401 only to the extent provided in Rev. Proc. 2011-49 or subsequent guidance.

The Employer may not rely on the advisory letter in certain other circumstances or with respect to certain qualification requirements, which are specified in the advisory letter issued with respect to the Plan and in Rev. Proc. 2011-49 or subsequent guidance. In order to have reliance in such circumstances or with respect to such qualification requirements, application for a determination letter must be made to Employee Plans Determinations of the Internal Revenue Service.

This Adoption Agreement may be used only in conjunction with the Volume Submitter basic Plan document #07. This Adoption Agreement and the basic Plan document will together be known as Altigro Pension Services, Inc. Volume Submitter 401(k) Profit Sharing Plan #07-003.

The adoption of this Plan, its qualification by the IRS, and the related tax consequences are the responsibility of the Employer and its independent tax and legal advisors.

Altigro Pension Services, Inc. will notify the Employer of any amendments made to the Plan or of the discontinuance or abandonment of the Plan. Furthermore, in order to be eligible to receive such notification, the Employer agrees to notify Altigro Pension Services, Inc. of any change in address. In addition, this Plan is provided to the Employer either in connection with investment in a product or pursuant to a contract or other arrangement for products and/or services. Upon cessation of such investment in a product or cessation of such contract or arrangement, as applicable, the Employer is no longer considered to be an adopter of this Plan and Altigro Pension Services, Inc. no longer has any obligations to the Employer that relate to the adoption of this Plan.

With regard to any questions regarding the provisions of the Plan, adoption of the Plan, or the effect of an advisory letter from the IRS, call or write (this information must be completed by the sponsor of this Plan or its designated representative):

Name: Altigro Pension Services, Inc.

Address: 3 U.S. Highway 46 West

Fairfield New Jersey 07004

Telephone: (973) 439-0200

The Employer and Trustee (or Insurer), by executing below, hereby adopt this Plan:

EMPLOYER: Halcyon Construction Corporation

By: _____ _____
DATE SIGNED

TRUSTEE (OR INSURER):

[ ] The signature of the Trustee or Insurer appears on a separate agreement or Contract,

OR (add additional Trustee signature lines as necessary)

Charles D. Casarella

_____ _____
TRUSTEE OR INSURER DATE SIGNED

Joseph Zuzzolo

_____ _____
TRUSTEE OR INSURER DATE SIGNED

APPENDIX A
SPECIAL EFFECTIVE DATES AND OTHER PERMITTED ELECTIONS

A. **Special effective dates/spin-offs/mergers** (the following elections are optional; select any that apply):

a. [ ] **Employer matching contributions.** The Employer matching contribution provisions under Question 28. are effective: _____.

b. [ ] **Employer profit sharing contributions.** The Employer profit sharing contribution provisions under Questions 29. and 30. are effective: _____.

c. [ ] **Distribution elections.** The distribution elections under Questions _____ (Choose 34. - 42. as applicable) are effective: _____.

d. [ ] **Other special effective date(s):** _____. For periods prior to the specified special effective date(s), the Plan terms in effect prior to its restatement under this Adoption Agreement will control for purposes of the designated provisions. A special effective date may not result in the delay of a Plan provision beyond the permissible effective date under any applicable law.

e. [ ] **Spin-off.** The Plan was a spin-off from the _____ (enter name of plan), which was originally effective _____ (enter effective date of original plan).

f. [ ] **Merged plans.** The following plan(s) are merged into this Plan (enter applicable information; attach addendum if more than 4 merged plans):

	Name of merged plan	Merger date	Original effective date of merged plan
1.	_____	_____	_____
2.	_____	_____	_____
3.	_____	_____	_____
4.	_____	_____	_____

B. **Other permitted elections** (the following elections are optional):

a. [ ] **No other permitted elections**

The following elections apply (select one or more):

b. [ ] **Deemed 125 compensation** (Plan Section 1.40). Deemed 125 compensation will be included in Compensation and 415 Compensation.

c. [ ] **Reemployed after five (5) 1-Year Breaks in Service ("rule of parity" provisions)** (Plan Section 3.5(d)). The "rule of parity" provisions in Plan Section 3.5(d) will not apply for (select one or both):
1. [ ] eligibility purposes
2. [ ] vesting purposes

d. [ ] **The "one-year hold-out" rule** described in Plan Section 3.5(e) will apply to (select one or both):
1. [ ] determine eligibility (for all contributions types except Elective Deferrals)
2. [ ] determine vesting

e. [ ] **Normal form of annuity.** If the Plan permits an annuity form of payment (e.g., if 34.f.1., f.2. or g. is selected), instead of a joint and 50% survivor annuity, the normal form of the qualified Joint and Survivor Annuity will be:
1. [ ] joint and 100% survivor annuity
2. [ ] joint and 75% survivor annuity
3. [ ] joint and 66 2/3% survivor annuity

f. [ ] **Beneficiary if no beneficiary elected by Participant** (Plan Section 6.2(e)). In the event no valid designation of Beneficiary exists, then in lieu of the order set forth in Plan Section 6.2(e), the following order of priority will be used: _____ (specify an order of beneficiaries; e.g., children per stirpes, parents, and then step-children).

g. [ ] **Common, collective or pooled trust funds** (Plan Sections 7.2(c)(5) and/or 7.3(b)(6)). The name(s) of the common, collective or pooled trust funds available under the Plan is (are): _____.

h. [ ] **"Section 411(d)(6) protected benefits"** (Plan Section 8.1(b)). The following are Code §411(d)(6) protected benefits that are preserved under this Plan: _____ (specify the protected benefits and the accrued benefits that are subject to the protected benefits).

i. [ ] **Limitation Year** (Plan Section 1.50). The Limitation Year for Code §415 purposes will be _____ (must be a consecutive twelve month period) instead of the "determination period" for Compensation.

j. [ ] **415 Limits when 2 or more defined contribution plans are maintained** (Plan Section 4.4). If any Participant is covered under another qualified defined contribution plan maintained by the Employer or an Affiliated Employer, or if the Employer or an Affiliated Employer maintains a welfare benefit fund, as defined in Code §419(e), or an individual medical account, as defined in Code §415(l)(2), under which amounts are treated as "annual additions" with respect to any Participant in this Plan, then the provisions of Plan Section 4.4(b) will apply unless otherwise specified below:
1. [ ] Specify, in a manner that precludes Employer discretion, the method under which the plans will limit total "annual additions" to the "maximum permissible amount" and will properly reduce any "excess amounts":

_____.

k. [X] **Top-heavy duplications** (select one or more)

1. [ ] **Top-heavy duplications when 2 or more defined contribution plans are maintained** (Plan Section 4.3(f)). When a Non-Key Employee is a Participant in this Plan and another defined contribution plan maintained by the Employer that is subject to the top-heavy rules, indicate which method will be utilized to avoid duplication of top-heavy minimum benefits:
   a. [ ] The full top-heavy minimum will be provided in each plan.
   b. [ ] A minimum, non-integrated contribution of 3% of each Non-Key Employee's 415 Compensation will be provided in the Money Purchase Plan (or other plan subject to Code §412).
   c. [ ] Specify the method under which the plans will provide top-heavy minimum benefits for Non-Key Employees that will preclude Employer discretion and avoid inadvertent omissions, including any adjustments required under Code §415: _____.

   NOTE: If b. or c. is selected then (1) an Employer may not rely on the advisory letter issued by the Internal Revenue Service with respect to the requirements of Code §416, and (2), if the plans do not benefit the same Participants, the uniformity requirement of the Regulations under Code §401(a)(4) may be violated.

2. [X] **Top-heavy duplications when a defined benefit plan is maintained** (Plan Section 4.3(i)). When a Non-Key Employee is a Participant in this Plan and a non-frozen defined benefit plan maintained by the Employer that is subject to the top-heavy rules, indicate which method will be utilized to avoid duplication of top-heavy minimum benefits: (select one of a. - d. AND complete e. or select f.)
   a. [ ] The full top-heavy minimum will be provided in each plan (if selected, Plan Section 4.3(i) will not apply).
   b. [ ] 5% defined contribution minimum
   c. [ ] 2% defined benefit minimum will be made in the _____ (enter the name of the other plan)
   d. [X] Specify the method under which the plans will provide top-heavy minimum benefits for Non-Key Employees that will preclude Employer discretion and avoid inadvertent omissions: No top heavy minimum requirement for DB plan due to its frozen state.

   NOTE: If b., c., or d. is selected then (1) an Employer may not rely on the advisory letter issued by the Internal Revenue Service with respect to the requirements of Code §416, and (2), if the plans do not benefit the same Participants, the uniformity requirement of the Regulations under Code §401(a)(4) may be violated.

   AND, the "present value" (Plan Section 9.2) for top-heavy purposes will be based on:
   e. [X] Interest Rate: 0

   Mortality Table: none
   f. [ ] The interest rate and mortality table specified to determine "present value" for top-heavy purposes in the defined benefit plan.

   AND, a Participant must be employed on the last day of the Plan Year in order to receive the top-heavy minimum (Plan Section 4.3(h)) unless elected below.
   g. [ ] A Participant is not required to be employed by the Employer on the last day of the Plan Year.

l. [ ] **Recognition of Service with other employers** (Plan Sections 1.62 and 1.88). Service with the following employers (in addition to those specified at Question 16) will be recognized as follows (select one or more; if more than 6 employers, attach an addendum to the Adoption Agreement):

		Eligibility	Vesting	Contribution Allocation
1. [ ]	Employer name: _____	a. [ ]	b. [ ]	c. [ ]
2. [ ]	Employer name: _____	a. [ ]	b. [ ]	c. [ ]
3. [ ]	Employer name: _____	a. [ ]	b. [ ]	c. [ ]
4. [ ]	Employer name: _____	a. [ ]	b. [ ]	c. [ ]
5. [ ]	Employer name: _____	a. [ ]	b. [ ]	c. [ ]
6. [ ]	Employer name: _____	a. [ ]	b. [ ]	c. [ ]

Limitations

7. [ ] The following provisions or limitations apply with respect to the recognition of prior service: _____ (e.g., credit service with X only on/following 1/1/13 or credit all service with entities the Employer acquires after 12/31/12)	a. [ ]	b. [ ]	c. [ ]

m. [ ] **Other vesting provisions.** The following vesting provisions apply to the Plan (select one or more):

1. [ ] **Special vesting provisions.** The following special provisions apply to the vesting provisions of the Plan: _____ (must be definitely determinable, non-discriminatory under Code §401(a)(4) and otherwise satisfy the parameters set forth in Questions 18 and 19 and Plan Section 6.4.; e.g., rather than the schedule specified at Question 18, the 5-year graded schedule applies to amounts merged into the Plan from the XYZ Plan.)

2. [ ] **Pre-amendment vesting schedule.** (Plan Section 6.4(h)). If the vesting schedule has been amended and a different vesting schedule other than the schedule at Question 18 applies to any Participants, then the following provisions apply (must select one of a. - d. AND complete e.):

Applicable Participants. The vesting schedules in Question 18 only apply to:

a. [ ] Participants who are Employees as of _____ (enter date).
b. [ ] Participants in the Plan who have an Hour of Service on or after _____ (enter date).
c. [ ] Participants (even if not an Employee) in the Plan on or after _____ (enter date).
d. [ ] Other: _____ (e.g., Participants in division A)

Vesting schedule

e. The schedule that applies to Participants not subject to the vesting schedule in Question 18 is:

Years (or Periods) of Service	Percentage
_____	_____%
_____	_____%
_____	_____%
_____	_____%
_____	_____%
_____	_____%

3. [ ] **Prior vesting schedule for Employer matching contributions.** The vesting schedule for amounts attributable to Employer matching contributions made prior to Plan Years beginning after December 31, 2001 is: _____ (enter the vesting schedule that applied prior to the Plan Year beginning in 2002; such schedule must satisfy 5-year cliff or 7-year graded and, if applicable, must provide for a top-heavy minimum schedule)

n. [ ] **Top-heavy vesting schedule** (Plan Section 6.4(e)).

Instead of any other vesting schedules set forth in the Plan, if this Plan becomes a Top-Heavy Plan, the following vesting schedule, based on number of Years of Service (or Periods of Service if the elapsed time method is selected) will apply:

1. [ ] 6 Year Graded: 0-1 year-0%; 2 years-20%; 3 years-40%; 4 years-60%; 5 years-80%; 6 years-100%
2. [ ] 3 Year Cliff: 0-2 years-0%; 3 years-100%
3. [ ] Other - Must be at least as liberal as either 1. or 2. above in each year without switching between the two schedules. (if a different top-heavy schedule applies to different contribution sources, attach an addendum specifying the schedule that applies to each source):

Years (or Periods) of Service	Percentage
_____	_____%
_____	_____%
_____	_____%
_____	_____%
_____	_____%
_____	_____%

NOTE: This Section does not apply to the Account balance of any Participant who does not have an Hour of Service after the Plan has initially become top-heavy. Such Participant's Vested Account balance will be determined without regard to this Section.

o. [ ] **Leased Employees** (Plan Section 1.49)

1. [ ] **Offset of contributions to leasing organization plan.** The Employer will reduce allocations to this Plan for any Leased Employee to the extent that the leasing organization contributes to or provides benefits under a leasing organization plan to or for the Leased Employee and which are attributable to the Leased Employee's services for the Employer.

2. [ ] **Disregard one year requirement.** The definition of Leased Employee shall be applied by disregarding the requirement of performing services for at least one year, for the following contributions (select a. or all that apply of b.1. - b.3.) (Elective Deferrals include Roth Elective Deferrals, "ADP test safe harbor contributions" (including those made pursuant to a QACA) and SIMPLE 401(k) contributions, after-tax voluntary Employee contributions, and rollover contributions; Matching includes QMACs; and Nonelective Profit Sharing includes QNECs):

a. [ ] All contributions
b. [ ] The following contributions (select all that apply)
   1. [ ] Elective Deferrals
   2. [ ] Matching contributions
   3. [ ] Nonelective Profit Sharing contributions

p. [ ] **Minimum distribution transitional rules** (Plan Section 6.8(e)(5))

NOTE: This Section does not apply to (1) a new Plan, (2) an amendment or restatement of an existing Plan that never contained the provisions of Code §401(a)(9) as in effect prior to the amendments made by the Small Business Job Protection Act of 1996 (SBJPA), or (3) a Plan where the transition rules below do not affect any current Participants.

The "required beginning date" for a Participant who is not a "five percent (5%) owner" is:

1. [ ] April 1st of the calendar year following the year in which the Participant attains age 70 1/2. (pre-SBJPA rules continue to apply)
2. [ ] April 1st of the calendar year following the later of the year in which the Participant attains age 70 1/2 or retires (the post-SBJPA rules), with the following exceptions (select one or both; leave blank if both applied effective as of January 1, 1996):
   a. [ ] A Participant who was already receiving required minimum distributions under the pre-SBJPA rules as of _____ (may not be earlier than January 1, 1996) was allowed to stop receiving distributions and have them recommence in accordance with the post-SBJPA rules. Upon the recommencement of distributions, if the Plan permits annuities as a form of distribution then the following apply:
      1. [ ] N/A (annuity distributions are not permitted)
      2. [ ] Upon the recommencement of distributions, the original Annuity Starting Date will be retained.
      3. [ ] Upon the recommencement of distributions, a new Annuity Starting Date is created.
   b. [ ] A Participant who had not begun receiving required minimum distributions as of _____ (may not be earlier than January 1, 1996) may elect to defer commencement of distributions until retirement. The option to defer the commencement of distributions (i.e., to elect to receive in-service distributions upon attainment of age 70 1/2) applies to all such Participants unless selected below:
      1. [ ] The in-service distribution option was eliminated with respect to Participants who attained age 70 1/2 in or after the calendar year that began after the later of (1) December 31, 1998, or (2) the adoption date of the restatement to bring the Plan into compliance with the SBJPA.

q. [ ] **Other spousal provisions** (select one or more)

1. [ ] **One-year marriage rule.** For purposes of the Plan, other than for purposes of determining eligible hardship distribution expenses, an individual is treated as Spouse only if such individual was married throughout the one year period ending on the earlier of the Annuity Starting Date or the date of the Participant's death.
2. [ ] **Definition of Spouse.** The term Spouse includes a spouse under federal law as well as the following:

   _____.
3. [ ] **Automatic revocation of spousal designation** (Plan Section 6.2(f)). The automatic revocation of a spousal Beneficiary designation in the case of divorce does not apply.
4. [ ] **Timing of QDRO payment.** A distribution to an Alternate Payee shall not be permitted prior to the time a Participant would be entitled to a distribution.

r. [ ] **Applicable law.** Instead of using the applicable laws set forth in Plan Section 10.4(a), the Plan will be governed by the laws of: _____

s. [ ] **Total and Permanent Disability.** Instead of the definition at Plan Section 1.83, Total and Permanent Disability means: _____ (must be definitely determinable).

t. [ ] **Other Trust provisions** (select any that apply)

1. [ ] **Special Trustee for collection of contributions.** The Employer appoints the following Special Trustee with the responsibility to collect delinquent contributions pursuant to Plan Section 7.1(b):

   Name: _____

   Title

   a. [ ] _____

   Address and telephone number

   b. [ ] Use Employer address and telephone number

   c. [ ] Use address and telephone number below:

   Address: _____
   Street

   _____ _____ _____
   City State Zip

   Telephone: _____

   NOTE: The Trustee named above is hereby appointed as a Trustee for the Plan, and is referred to as the Special Trustee. The sole responsibility of the Special Trustee is to collect contributions the Employer owes to the Plan. No other Trustee has any duty to ensure that the contributions received comply with the provisions of the Plan or is obliged to collect any contributions from the Employer. No Trustee, other than the Special Trustee, is obliged to ensure that funds deposited are deposited according to the provisions of the Plan. The Special Trustee must accept its position and agree to its obligations hereunder.

2. [ ] **Permissible Trust (or Custodian) modifications.** The Employer makes the following modifications to the Trust (or Custodial) provisions as permitted under Rev. Proc. 2011-49 (or subsequent IRS guidance) (select one or more of a. - c. below):

NOTE: Any elections below must not: (i) conflict with any Plan provision unrelated to the Trust or Trustee; or (ii) cause Plan to violate Code §401(a). In addition, this may not be used to substitute all of the Trust provisions in the Plan.

a. [ ] **Investments.** The Employer amends the Trust provisions relating to Trust investments as follows: _____

b. [ ] **Duties.** The Employer amends the Trust provisions relating to Trustee (or Custodian) duties as follows: _____

c. [ ] **Other administrative provisions.** The Employer amends the other administrative provisions of the Trust as follows: _____

u. [ ] **Other provisions for matching contributions** (select one or more)

1. [ ] **Match applied to elective deferrals to 403(b) arrangement.** In applying any matching contributions in this Plan, elective deferrals to a Code §403(b) arrangement will be aggregated with Elective Deferrals to this Plan.
2. [ ] **Matching contributions not used to satisfy top-heavy contribution** (Plan Section 4.3(j)). Employer matching contributions will NOT be taken into account for purposes of satisfying the minimum contribution requirements of Code §416(c)(2) and the Plan.

v. [ ] **QACA safe harbor contributions vesting options.** The vesting options selected at Question 19 on the Adoption Agreement also apply to the Participant's Qualified Automatic Contribution Safe Harbor Account unless otherwise selected below (select all that apply):

Excluded service prior to initial Effective Date of Plan or a predecessor plan (as defined in Regulations §1.411(a)-5(b)(3))

1. [ ] applies
2. [ ] does not apply

Excluded service prior to the computation period in which an Employee has attained age 18

3. [ ] applies
4. [ ] does not apply

Full vesting upon death

5. [ ] applies
6. [ ] does not apply

Full vesting upon Total and Permanent Disability

7. [ ] applies
8. [ ] does not apply

ADMINISTRATIVE PROCEDURES

The following are optional administrative provisions. The Administrator may implement procedures that override any elections in this Section without a formal Plan amendment. In addition, modifications to these procedures will not affect an Employer's reliance on the Plan.

A. **Loan limitations. Note:** the separate loan program required by the DOL will override any inconsistent selections made below. (complete only if loans to Participants are permitted)

a. [X] Limitations (select one or more; leave blank if none apply):

1. [X] Loans will be treated as Participant directed investments.
2. [ ] Loans will only be made for hardship or financial necessity as defined below (select a. or b.)
   a. [ ] hardship reasons specified in Plan Section 12.10
   b. [ ] other: _____ (specify financial necessity)
3. [X] The minimum loan will be $_1,000_ (may not exceed $1,000).
4. [X] A Participant may only have _one (1)_ (e.g., one (1)) loan(s) outstanding at any time.
5. [ ] All outstanding loan balances will become due and payable in their entirety upon severance of employment unless directly rolled over (if otherwise permitted) to another employer's plan.
6. [ ] **Account restrictions.** Loans will only be permitted from the following Participant Accounts (select all that apply or leave blank if no limitations apply):
   a. [ ] Pre-Tax Elective Deferral Account
   b. [ ] Roth Elective Deferral Account
   c. [ ] Account(s) attributable to Employer matching contributions (includes matching "ADP test safe harbor contributions")
   d. [ ] Account attributable to Employer Nonelective profit sharing contributions
   e. [ ] Qualified Nonelective Contribution Account (includes nonelective "ADP test safe harbor contributions")
   f. [ ] Rollover Account
   g. [ ] Transfer Account attributable to (select one or both):
      1. [ ] non-pension assets
      2. [ ] pension assets (e.g., from a money purchase pension plan)
   h. [ ] Voluntary Contribution Account
   i. [ ] Other: _____

   AND, if loans are restricted to certain Accounts, the limitations of Code §72(p) and the adequate security requirement of the DOL Regulations will be applied:
   j. [ ] by determining the limits by only considering the restricted Accounts.
   k. [ ] by determining the limits taking into account a Participant's entire interest in the Plan.

Additional loan provisions (select all that apply; leave blank if none apply)

b. [X] **Loan payments.** Loans are repaid by (if left blank, then payroll deduction applies unless Participant is not subject to payroll; e.g., partner who only has a draw):

1. [X] payroll deduction
2. [ ] ACH (Automated Clearing House)
3. [X] check
   a. [X] Only for prepayment

c. [X] **Interest rate.** Loans will be granted at the following interest rate (if left blank, then 3. below applies):

1. [X] _1_ percentage points over the prime interest rate
2. [ ] _____%
3. [ ] the Administrator establishes the rate in a nondiscriminatory manner

d. [ ] **Refinancing.** Loan refinancing is allowed.

B. **Life insurance.** (Plan Section 7.5)

a. [X] Life insurance may not be purchased.

b. [ ] Life insurance may be purchased...

1. [ ] at the option of the Administrator
2. [ ] at the option of the Participant

Limitations

3. [ ] N/A (no limitations)
4. [ ] The purchase of initial or additional life insurance will be subject to the following limitations (select one or more):
   a. [ ] Each initial Contract will have a minimum face amount of $_____.
   b. [ ] Each additional Contract will have a minimum face amount of $_____.
   c. [ ] The Participant has completed _____ Years (or Periods) of Service.
   d. [ ] The Participant has completed _____ Years (or Periods) of Service while a Participant in the Plan.
   e. [ ] The Participant is under age _____ on the Contract issue date.
   f. [ ] The maximum amount of all Contracts on behalf of a Participant may not exceed $_____.
   g. [ ] The maximum face amount of any life insurance Contract will be $_____.

C. **Plan expenses and Forfeitures**

Plan expenses. Will the Plan assess against an individual Participant's Account certain Plan expenses that are incurred by, or are attributable to, a particular Participant based on use of a particular Plan service?

a. [ ] No
b. [X] Yes

Use of Forfeitures

Other than Employer matching contributions. Forfeitures of amounts attributable to Employer contributions other than Employer matching contributions will be:

c. [X] added to any Employer discretionary contribution (e.g., matching or profit sharing) and allocated in the same manner
d. [ ] used to reduce any Employer contribution (other than contributions that must be fully Vested when contributed such as QNECs, QMACs and "ADP test safe harbor" contributions that are not made pursuant to a QACA) (see Note below)
e. [ ] added to any Employer matching contribution and allocated as an additional matching contribution
f. [ ] allocated to all Participants eligible to share in the allocations of profit sharing contributions or Forfeitures in the same proportion that each Participant's Compensation for the Plan Year bears to the Compensation of all Participants for such year
g. [ ] other: _____ (describe the treatment of Forfeitures in a manner that is definitely determinable and not subject to Employer discretion; e.g., Forfeitures attributable to transferred balances from Plan X are allocated as additional discretionary contributions only to former Plan X Participants)

Matching contributions. Forfeitures of amounts attributable to Employer matching contributions will be:

h. [ ] N/A (same as above or no Employer matching contributions)
i. [ ] used to reduce the Employer matching contribution (other than contributions that must be fully Vested when contributed such as QNECs, QMACs and "ADP test safe harbor" contributions that are not made pursuant to a QACA) (see Note below)
j. [ ] added to any Employer matching contribution and allocated as an additional matching contribution
k. [ ] added to any Employer discretionary profit sharing contribution
l. [ ] used to reduce any Employer contribution (other than contributions that must be fully Vested when contributed such as QNECs, QMACs and "ADP test safe harbor" contributions that are not made pursuant to a QACA) (see Note below)
m. [ ] other: _____ (describe the treatment of Forfeitures in a manner that is definitely determinable and not subject to Employer discretion; e.g., Forfeitures attributable to transferred balances from Plan X are allocated as additional discretionary contributions only to former Plan X Participants)

NOTE: Effective for Plan Years beginning after the Plan Year in which this Plan document is adopted, Forfeitures may not be used to reduce Employer contributions which are required pursuant to the Code to be fully Vested when contributed to the Plan (such as QMACs, QNECs and "ADP test safe harbor contributions" other than QACA "ADP test safe harbor contributions"). The reallocation of Forfeitures could affect the Plan's top-heavy exemption (see Plan Section 12.8(f)). One approach to avoid this result is to provide for a discretionary matching contribution that satisfies the "ACP test safe harbor" provisions (i.e., select Question 27A.b and select a discretionary matching contribution at Question 28) and then allocate Forfeitures as a matching contribution.

D. **Directed investments** (Plan Section 4.10)

a. [ ] Participant directed investments are NOT permitted.
b. [X] Participant directed investments are permitted from the following Participant Accounts:
   1. [X] all Accounts
   2. [ ] only from the following Accounts (select one or more):
      a. [ ] Pre-Tax Elective Deferral Account
      b. [ ] Roth Elective Deferral Account
      c. [ ] Account(s) attributable to Employer matching contributions (includes matching "ADP test safe harbor contributions")
      d. [ ] Account attributable to Employer Nonelective profit sharing contributions
      e. [ ] Qualified Nonelective Contribution Account (includes nonelective "ADP test safe harbor contributions")
      f. [ ] Rollover Account
      g. [ ] Transfer Account
      h. [ ] Voluntary Contribution Account
      i. [ ] Other: _____ (specify Account(s) and conditions in a manner that is definitely determinable and not subject to Employer discretion)

Directed investment options (If directed investments are permitted, select all that apply; leave blank if none apply)

c. [X] **ERISA Section 404(c).** It is intended that the Plan comply with ERISA Section 404(c) with respect to the Accounts subject to Participant investment directions.
d. [ ] **QDIA.** Plan will include a qualified default investment alternative.

E. **Rollover limitations.** Will the Plan specify which sources of rollovers will be accepted? (skip if rollover contributions are NOT selected at 12.f.)

a. [ ] No, Administrator determines in operation which sources will be accepted.

b. [X] Yes

Rollover sources. Indicate the sources of rollovers that will be accepted (select one or more)

1. [X] **Direct rollovers.** Plan will accept a direct rollover of an eligible rollover distribution from (select one or more):
   - a. [X] a qualified plan described in Code §401(a) (including a 401(k) plan, profit sharing plan, defined benefit plan, stock bonus plan and money purchase plan), excluding after-tax employee contributions
   - b. [ ] a qualified plan described in Code §401(a) (including a 401(k) plan, profit sharing plan, defined benefit plan, stock bonus plan and money purchase plan), including after-tax employee contributions
   - c. [X] a plan described in Code §403(a) (an annuity plan), excluding after-tax employee contributions
   - d. [ ] a plan described in Code §403(a) (an annuity plan), including after-tax employee contributions
   - e. [X] a plan described in Code §403(b) (a tax-sheltered annuity), excluding after-tax employee contributions
   - f. [ ] a plan described in Code §403(b) (a tax-sheltered annuity), including after-tax employee contributions
   - g. [ ] a governmental plan described in Code §457(b) (eligible deferred compensation plan)
   - h. [ ] if this Plan permits Roth Elective Deferrals, a Roth Elective Deferral Account from (select one or more):
     1. [ ] a qualified plan described in Code §401(a)
     2. [ ] a plan described in Code §403(b) (a tax-sheltered annuity)

   Direct rollovers of Participant loan. The Plan will NOT accept a direct rollover of a Participant loan from another plan unless selected below (leave blank if default applies)

   - i. [ ] The Plan will accept a direct rollover of a Participant loan
     1. [ ] only in the following situation(s): _____ (e.g., only from Participants who were employees of an acquired organization; leave blank if not applicable).

2. [ ] **Participant rollover contributions from other plans (i.e., not via a direct plan-to-plan transfer).** The Plan will accept a contribution of an eligible rollover distribution (select one or more):
   - a. [ ] a qualified plan described in Code §401(a) (including a 401(k) plan, profit sharing plan, defined benefit plan, stock bonus plan and money purchase plan)
   - b. [ ] a plan described in Code §403(a) (an annuity plan)
   - c. [ ] a plan described in Code §403(b) (a tax-sheltered annuity)
   - d. [ ] a governmental plan described in Code §457(b) (eligible deferred compensation plan)

3. [ ] **Participant rollover contributions from IRAs:** The Plan will accept a rollover contribution of the portion of a distribution from a traditional IRA that is eligible to be rolled over and would otherwise be includible in gross income. Rollovers from Roth IRAs or a Coverdell Education Savings Account (formerly known as an Education IRA) are not permitted because they are not traditional IRAs. A rollover from a SIMPLE IRA is allowed if the amounts are rolled over after the individual has been in the SIMPLE IRA for at least two years.

F. **Elective Deferral procedure.** Participants may commence Elective Deferrals on the effective date of participation.

Optional date. Participants may also commence making Elective Deferrals on (leave blank if not applicable):

a. [ ] _____ (must be at least once each calendar year)

Elective Deferral modifications. Participants may modify Elective Deferral elections:

b. [ ] as of each payroll period

c. [ ] on the first day of each month

d. [X] on the first day of each Plan Year quarter

e. [ ] on the first day of the Plan Year or the first day of the 7th month of the Plan Year

f. [ ] other: _____ (must be at least once each calendar year)

Irregular pay (e.g., bonuses). Unless the Administrator has implemented separate procedures or selected below, a Participant is permitted to make a separate Elective Deferral election for irregular pay and the Participant's existing Elective Deferral election will not apply to such irregular pay.

g. [ ] A Participant's existing Elective Deferral election will apply to irregular pay (provided such irregular pay is Compensation for Elective Deferral purposes) unless the Participant makes a different Elective Deferral election for such irregular pay.

h. [X] A Participant is not permitted to make a separate Elective Deferral election for irregular pay and the Participant's existing Elective Deferral election will apply to such irregular pay (provided such irregular pay is Compensation for Elective Deferral purposes).

Escalation (leave blank if not applicable)

i. [ ] Include option for Participants to elect to automatically escalate an Affirmative Election in accordance with the following:

Escalation amount. A Participant's Affirmative Election will increase by:

1. [ ]_____% of Compensation
   a. [ ] up to a maximum of _____% of Compensation (leave blank if no limit)
2. [ ] other: _____

Timing of escalation. The escalation will apply as of:

3. [ ] first day of each Plan Year
4. [ ] anniversary of date of participation
5. [ ] other: _____

First period of application. Unless selected below, the escalation provision above will apply as of the second period specified above that begins after the period in which the Participant first has contributions made pursuant to a default election.

6. [ ] The escalation provision will apply as of the first period after the Participant first has contributions made pursuant to a default election.

Suspended Elective Deferrals. If a Participant's Elective Deferrals must be suspended pursuant to a provision of the Plan (e.g., due to a hardship distribution or distribution due to military leave covered by the HEART Act), then a Participant is deemed to have made as of the date the suspension period begins, an Affirmative Election to have no Elective Deferrals made to the Plan unless otherwise selected below.

j. [ ] the Participant's Affirmative Election will resume after the suspension period.

k. [ ] the Participant is deemed to have no Affirmative Election after the suspension period (e.g., for purposes of applying any Automatic Deferral provisions).

Lapse of Affirmative Elections. Affirmative Elections will remain in effect until revoked or modified by a Participant unless selected below.

l. [ ] Affirmative Elections lapse at the end of each Plan Year.

ALTIGRO PENSION SERVICES, INC. VOLUME SUBMITTER MODIFICATIONS

HALCYON CONSTRUCTION CORPORATION 401(K) PROFIT SHARING PLAN

The enclosed Plan is being submitted for expedited review as a Volume Submitter Plan.

No modifications from the approved specimen plan have been made to this Plan.

HALCYON CONSTRUCTION CORPORATION

CONTRACTORS-ENGINEERS
65 MARBLE AVENUE
PLEASANTVILLE, NEW YORK 10570

TEL. 914-741-1112

May 4 , 2016

To: All Employees

Re: Health Insurance Renewal

Our healthcare renewal is June 1, 2016. We are offering two (2) plans. The base plan is the Oxford Freedom HSA Gold EPO, and the buy up plan is the Oxford Freedom NG Platinum PPOc. Details as outlined below.

As in prior years Halcyon will continue to pay the premium for the base plan, as well as 50% of the deductible in the base plan. If you elect to buy up to the Platinum plan the premium differential will be a made through a pre-tax payroll deduction.

The monthly premiums are as follows:

	Base Plan - Oxford Freedom HSA Gold EPO	**Buy Up Plan – Oxford Freedom NG Platinum PPOc**
Employee	$ 763.61	$ 1024.37
Employee/Spouse	$ 1527.22	$ 2048.74
Employee/Child	$ 1298.15	$ 1741.43
Family	$ 2176.30	$ 2919.46

For example, if you elect the base plan as employee only coverage there is no cost you as Halcyon is paying the premium. If you elect the buy up plan, then the difference between the base plan premium, $763.61, and the buy up premium, $1024.37 would be a weekly pre-tax payroll deduction of $60.18.

The two (2) plan designs and an explanation of how HSA's function is attached for your review. Please note the HSA is only available with the Base Plan and you would need to set it up with your own financial institution.

This letter is to inform you of the increases in the plans. If you are currently on the Buy up Plan, your payroll deduction will change week ending June 4, 2016. The increase is approximately 5.5%. If you would like to change your plan, please let me know no later than May 20, 2016 to allow the changes to take place for June 1, 2016.

If you have any questions please contact me directly and I will be happy to answer your questions.

Very truly yours,

Christine Gencarelli
Plan Administrator

085ABRPNYG22003001-00655-12

UnitedHealthcare Oxford
4 Research Drive
Shelton, CT 06484

March 28, 2016

HALCYON CONSTRUCTION CORP
65 MARBLE AVENUE
PLEASANTVILLE NY 10570

NOTICE OF RENEWAL AND 2016 PREMIUM RATES

Dear Charles Casarella,

Your group health insurance coverage is coming up for renewal. Your group policy will be automatically renewed on June 1, 2016 as long as your group continues to be eligible. Your group's members will be automatically re-enrolled unless you choose another policy. Included are changes we'll be making to your policy, the new premium for this policy, and some information about options if you wish to change policies.

Premium Rate Changes:
The premium rates for your health insurance policy are changing. The new rates will take effect on June 1, 2016. The new rates below have been approved by the New York State Department of Financial Services (DFS). This will provide an estimate based on current enrollment of your group. This amount may change depending on the individuals who actually enroll in the policy.

OXFORD NEW YORK SMALL GROUP MONTHLY PREMIUMS FOR:
alcyon Construction Corp; Group #: HC06501/CS17F

TIERS	2015 RATES		2016 RATES	
	Employee Count	Rate	Employee Count	Rate
Single	0	$723.57	0	$763.61
Couple	3	$1447.16	3	$1527.22
Parent/Children	1	$1230.09	1	$1298.15
Family	4	$2062.20	4	$2176.30
Premium Total	8	$13820.37	8	**$14585.01**

You may visit the DFS website atwww.dfs.ny.gov for more information regarding this rate change. You may also contact us by calling Client Services at 1-888-201-4216 or via e-mail atgroupservices@oxfordhealth.comor via our website at oxfordhealth.com for further information about this rate change.

Other Changes to Your Current Health Insurance Policy:
Below is a high level description of changes for your renewing Oxford plan. Please refer to the *Required Uniform Modification Notice for Small Group* enclosure to review additional benefit changes that impact your renewal. Additional information about member cost-share and benefit changes is contained in your Summary of Benefits and Coverage (SBC).

How Do I access the SBC?
Under the Affordable Care Act (ACA), health plan issuers (e.g., Oxford and UnitedHealthcare) and group health plans are required to provide new and renewing groups and members an SBC. The SBC for this renewal will be made available through our Oxford small group online enrollment tool, Idea Management System[SM] (IDEA), within 60 days of your renewal date. Simply log onto the Employer portal of **oxfordhealth.com**, click on the "My Account" tab and you will see the IDEA link. If, for reason, the SBC is not successfully loaded to IDEA, a hard copy will be mailed within 30 days of your renewal date. rmation related to when you must provide the SBCs to your members is found directly on IDEA and the Employer portal. A paper copy is also available upon request by calling Client Services. At this time, we are relying upon the employer group to deliver the SBCs to its employees and their dependents. Please review this information and your SBC to better understand the upcoming changes.

[1]Our Oxford small group HMO products are underwritten by Oxford Health Plans (NY), Inc. All other Oxford small group products are underwritten

What If I Don't Have a Username and Password for oxfordhealth.com?
Registering for a username and password is easy. Simply go to oxfordhealth.com and click on the "Employer" link from the home page. From there, select "Need to Register," which will direct you to a registration page. Once registered, you will be able to access the "My Account" tab from the Employer portal where you can then access the IDEA link. You will not need a separate username and password for the IDEA portion of the site.

PLAN DESIGN	EXISTING	RENEWAL
Metallic Level	GOLD	GOLD
Network		
Office Visit Copayment	$0PCP/$0SPEC	$0PCP/$0SPEC
Package Description	NYSM HSA EPO INPLAN D&C	NYSG EPO HSA INPT-D&C/OP-D&C
Prescription	UHSAPEH03F	UAHSA105F
In-Network Coinsurance	90/10 MAX $0	90/10 MAX $0
In-Network Deductible	$3000/$3000	$3000/$3000
In-Network Reimbursement Amount (where available)	N/A	N/A
In-Network Out-of-Pocket Limit	$2000/$4000	$2000/$4000
Out-of-Network Coinsurance	N/A	N/A
Out-of-Network Deductible	N/A	N/A
Out-of-Network Reimbursement Amount (where available)	STANDARD	STANDARD
Out-of-Network Out-of-Pocket Limit	N/A	N/A
Other Benefit Information (formerly Riders)	AGE29-CO, CALYEAR-R DOMESTIC2, RXNYSHSAMS	AGE29-CO, CALYEAR-R DOMESTIC2, RXNYSHSAMS

Coverage Options:
If you do not want your group's current policy to automaticallyrenew, you have the option of choosing a different policy either from us or from another insurer. To choose a different Oxford policy directly from us, you can use IDEA, call Client Services at **1-888-201-4216**, or contact your broker or agent. If you decide to select a new policy using IDEA, you **must submit** the documents listed below by the last day of the month prior to your effective date. Using IDEA will speed up the process by creating the required forms from the information you provide and will generate an electronic record for your files. You may also send these documents by mail to the Oxford Enrollment Department at 14 Central Park Drive, Hooksett, NH 03106. If you are not submitting information online through IDEA, a letter of request on company letterhead signed by an authorized contact detailing requested changes along with a signed rate sheet must be submitted. If you are moving into a different product underwritten by another licensed company (e.g., HMO to EPO), you may also be asked to submit a new application.

- ***New York Small Group Annual Certification Form***: This form is enclosed in this renewal package and needs to be completed.

- **Tax documentation**: Examples of acceptable documents include a *Quarterly Combined Withholding, Wage Reporting and Unemployment Insurance Return Form (NYS-45), Form 1120S* and *K1 (S Corporation), Form 1120 (C Corporation) and Schedule C*. If you filed a consolidated tax return as an affiliated group, please provide your most recent *IRS Form 851*. See enclosed *Instruction Sheet* for details.

You should also be aware of the following:
- **Audits**: We may conduct an audit of your group to confirm that the group meets eligibility and/or participation requirements. At that time, additional documentation may be required. Please visit oxfordhealth.com to review the *New York Small Group Underwriting Requirements*, which give more detail about our participation (does not apply to HMO products) and eligibility requirements for small group coverage. Please note that our lock box administrator automatically cashes all premium checks upon receipt. If your group does not meet eligibility and participation requirements, your cashed check does not obligate us to replace your coverage. Further, if you submit payment that exceeds any outstanding balance, and your group is not renewed, we will refund the additional amount.

UnitedHealthcare Oxford
4 Research Drive
Shelton, CT 06484

March 28, 2016

085ABRPNYG22003001-00655-01

HALCYON CONSTRUCTION CORP
65 MARBLE AVENUE
PLEASANTVILLE NY 10570

NOTICE OF RENEWAL AND 2016 PREMIUM RATES

Dear Charles Casarella,

Your group health insurance coverage is coming up for renewal. Your group policy will be automatically renewed on June 1, 2016 as long as your group continues to be eligible. Your group's members will be automatically re-enrolled unless you choose another policy. Included are changes we'll be making to your policy, the new premium for this policy, and some information about options if you wish to change policies.

Premium Rate Changes:
The premium rates for your health insurance policy are changing. The new rates will take effect on June 1, 2016. The new rates below have been approved by the New York State Department of Financial Services (DFS). This will provide an estimate based on current enrollment of your group. This amount may change depending on the individuals who actually enroll in the policy.

OXFORD NEW YORK SMALL GROUP MONTHLY PREMIUMS FOR:
alcyon Construction Corp; Group #: HC06501/CSP16

TIERS	2015 RATES		2016 RATES	
	Employee Count	Rate	Employee Count	Rate
Single	1	$959.02	1	$1024.37
Couple	2	$1918.05	2	$2048.74
Parent/Children	1	$1630.34	1	$1741.43
Family	1	$2733.22	1	$2919.46
Premium Total	5	$9158.68	5	$9782.74

You may visit the DFS website atwww.dfs.ny.gov for more information regarding this rate change. You may also contact us by calling Client Services at 1-888-201-4216 or via e-mail atgroupservices@oxfordhealth.comor via our website at oxfordhealth.com for further information about this rate change.

Other Changes to Your Current Health Insurance Policy:
Below is a high level description of changes for your renewing Oxford plan. Please refer to the *Required Uniform Modification Notice for Small Group* enclosure to review additional benefit changes that impact your renewal. Additional information about member cost-share and benefit changes is contained in your Summary of Benefits and Coverage (SBC).

How Do I access the SBC?
Under the Affordable Care Act (ACA), health plan issuers (e.g., Oxford and UnitedHealthcare) and group health plans are required to provide new and renewing groups and members an SBC. The SBC for this renewal will be made available through our Oxford small group online enrollment tool, Idea Management System[SM] (IDEA), within 60 days of your renewal date. Simply log onto the Employer portal of **oxfordhealth.com**, click on the "My Account" tab and you will see the IDEA link. If, for reason, the SBC is not successfully loaded to IDEA, a hard copy will be mailed within 30 days of your renewal date. mation related to when you must provide the SBCs to your members is found directly on IDEA and the Employer portal. A paper copy is also available upon request by calling Client Services. At this time, we are relying upon the employer group to deliver the SBCs to its employees and their dependents. Please review this information and your SBC to better understand the upcoming changes.

[1]Our Oxford small group HMO products are underwritten by Oxford Health Plans (NY), Inc. All other Oxford small group products are underwritten

What If I Don't Have a Username and Password for oxfordhealth.com?
Registering for a username and password is easy. Simply go to oxfordhealth.com and click on the "Employer" link from the home page. From there, select "Need to Register," which will direct you to a registration page. Once registered, you will be able to access the "My Account" tab from the Employer portal where you can then access the IDEA link. You will not need a separate username and password for the IDEA portion of the site.

PLAN DESIGN	EXISTING	RENEWAL
Metallic Level	PLATINUM	PLATINUM
Network		
Office Visit Copayment	$10PCP/$20SPEC	$5PCP/$15SPEC
Package Description	NY SMALL $10/20 PPO	NY SMALL PPO $5/15 IP $150
Prescription	UEHD103060	UEHA100
In-Network Coinsurance	N/A	N/A
In-Network Deductible	N/A	N/A
In-Network Reimbursement Amount (where available)	N/A	N/A
In-Network Out-of-Pocket Limit	$3000/$6000	$3000/$6000
Out-of-Network Coinsurance	70/30 MAX $0	70/30 MAX $0
Out-of-Network Deductible	$2000/$4000	$2000/$4000
Out-of-Network Reimbursement Amount (where available)	140MCARE	140MCARE
Out-of-Network Out-of-Pocket Limit	$5000/$10000	$5000/$10000
Other Benefit Information (formerly Riders)	AGE29-CO, CALYEAR-T DOMESTIC2, RXNYSEH6ET	AGE29-CO, CALYEAR-T DOMESTIC2, RXNYSEH6ET

Coverage Options:
If you do not want your group's current policy to automatically renew, you have the option of choosing a different policy either from us or from another insurer. To choose a different Oxford policy directly from us, you can use IDEA, call Client Services at **1-888-201-4216**, or contact your broker or agent. If you decide to select a new policy using IDEA, you **must submit** the documents listed below by the last day of the month prior to your effective date. Using IDEA will speed up the process by creating the required forms from the information you provide and will generate an electronic record for your files. You may also send these documents by mail to the Oxford Enrollment Department at 14 Central Park Drive, Hooksett, NH 03106. If you are not submitting information online through IDEA, a letter of request on company letterhead signed by an authorized contact detailing requested changes along with a signed rate sheet must be submitted. If you are moving into a different product underwritten by another licensed company (e.g., HMO to EPO), you may also be asked to submit a new application.

- ***New York Small Group Annual Certification Form***: This form is enclosed in this renewal package and needs to be completed.

- **Tax documentation**: Examples of acceptable documents include a *Quarterly Combined Withholding, Wage Reporting and Unemployment Insurance Return Form (NYS-45), Form 1120S* and *K1 (S Corporation), Form 1120 (C Corporation) and Schedule C*. If you filed a consolidated tax return as an affiliated group, please provide your most recent *IRS Form 851*. See enclosed *Instruction Sheet* for details.

You should also be aware of the following:
- **Audits**: We may conduct an audit of your group to confirm that the group meets eligibility and/or participation requirements. At that time, additional documentation may be required. Please visit oxfordhealth.com to review the *New York Small Group Underwriting Requirements*, which give more detail about our participation (does not apply to HMO products) and eligibility requirements for small group coverage. Please note that our lock box administrator automatically cashes all premium checks upon receipt. If your group does not meet eligibility and participation requirements, your cashed check does not obligate us to replace your coverage. Further, if you submit payment that exceeds any outstanding balance, and your group is not renewed, we will refund the additional amount.

The City of New York Department of Small Business Services
Division of Labor Services Contract Compliance Unit
110 William Street, New York, New York 10038
Phone: (212) 513 – 6323
Fax: (212) 618-8879

CONSTRUCTION EMPLOYMENT REPORT

GENERAL INFORMATION

1. Your contractual relationship in this contract is: Prime contractor_x_ Subcontractor____

1a. Are M/WBE goals attached to this project? Yes X No ____

2. Please check one of the following if your firm would like information on how to certify with the City of New York as a:

___Minority Owned Business Enterprise
___Women Owned Business Enterprise
___Disadvantaged Business Enterprise
___Locally Based Business Enterprise
___Emerging Business Enterprise

2a. If you are certified as an **MBE, WBE, LBE, EBE** or **DBE**, what city/state agency are you certified with? _____ Are you DBE certified? Yes ____ No ____

3. Please indicate if you would like assistance from SBS in identifying certified M/WBEs for contracting opportunities: Yes___ No X

4. Is this project subject to a project labor agreement? Yes ____ No X

5. Are you a Union contractor? Yes X No ____ If yes, please list which local(s) you affiliated with 15, 14, 731, 1536, 1010

6. Are you a Veteran owned company? Yes ____ No X

PART I: CONTRACTOR/SUBCONTRACTOR INFORMATION

7. 13-2995431 SLEOPOLDO83@GMAIL.COM
Employer Identification Number or Federal Tax I.D. Email Address

8. HALCYON CONSTRUCTION CORP.
Company Name

9. 65 MARBLE AVENUE
PLEASANTVILLE, NEW YORK 10570
Company Address and Zip Code

10. CHARLES CASARELLA 914-741-1112
Chief Operating Officer Telephone Number

11. "SAME" 914-741-1112
Designated Equal Opportunity Compliance Officer (If same as Item #10, write "same") Telephone Number

12. "SAME"
Name of Prime Contractor and Contact Person (If same as Item #8, write "same")

13. Number of employees in your company: 75

14. Contract information:

(a) NYC DDC
Contracting Agency (City Agency)

(b) _____
Contract Amount

(c) 85016B0110
Procurement Identification Number (PIN)

(d) —
Contract Registration Number (CT#)

(e) 1/2017
Projected Commencement Date

(f) 1/2019
Projected Completion Date

(g) Description and location of proposed contract:

INSTALLATION OF TRUNK WATER MAINS IN CRESCENT STREET, QUEENS

15. Has your firm been reviewed by the Division of Labor Services (DLS) within the past 36 months and issued a Certificate of Approval? Yes___ No X

If yes, attach a copy of certificate.

16. Has DLS within the past month reviewed an Employment Report submission for your company and issued a Conditional Certificate of Approval? Yes___ No X

If yes, attach a copy of certificate.

NOTE: DLS WILL NOT ISSUE A CONTINUED CERTIFICATE OF APPROVAL IN CONNECTION WITH THIS CONTRACT UNLESS THE REQUIRED CORRECTIVE ACTIONS IN PRIOR CONDITIONAL CERTIFICATES OF APPROVAL HAVE BEEN TAKEN.

17. Has an Employment Report already been submitted for a different contract (not covered by this Employment Report) for which you have not yet received compliance certificate?
Yes___ No X If yes,

Date submitted: _____
Agency to which submitted: _____
Name of Agency Person: _____
Contract No: _____
Telephone: _____

18. Has your company in the past 36 months been audited by the United States Department of Labor, Office of Federal Contract Compliance Programs (OFCCP)? Yes___ No X

If yes,

(a) Name and address of OFCCP office.

_____

_____

(b) Was a Certificate of Equal Employment Compliance issued within the past 36 months? Yes___ No___

If yes, attach a copy of such certificate.

(c) Were any corrective actions required or agreed to? Yes___ No___

If yes, attach a copy of such requirements or agreements.

(d) Were any deficiencies found? Yes___ No___

If yes, attach a copy of such findings.

19. Is your company or its affiliates a member or members of an employers' trade association which is responsible for negotiating collective bargaining agreements (CBA) which affect construction site hiring? Yes___ No X

If yes, attach a list of such associations and all applicable CBA's.

PART II: DOCUMENTS REQUIRED

20. For the following policies or practices, attach the relevant documents (e.g., printed booklets, brochures, manuals, memoranda, etc.). If the policy(ies) are unwritten, attach a full explanation of the practices. See instructions.

Y (a) Health benefit coverage/description(s) for all management, nonunion and union employees (whether company or union administered)

N (b) Disability, life, other insurance coverage/description

N (c) Employee Policy/Handbook

N (d) Personnel Policy/Manual

N (e) Supervisor's Policy/Manual

Y (f) Pension plan or 401k coverage/description for all management, nonunion and union employees, whether company or union administered

Y (g) Collective bargaining agreement(s).

N (h) Employment Application(s)

N (i) Employee evaluation policy/form(s).

N (j) Does your firm have medical and/or non-medical (i.e. education, military, personal, pregnancy, child care) leave policy?

21. To comply with the Immigration Reform and Control Act of 1986 when and of whom does your firm require the completion of an I-9 Form?

(a) Prior to job offer	Yes___	No X
(b) After a conditional job offer	Yes___	No X
(c) After a job offer	Yes___	No X
(d) Within the first three days on the job	Yes X	No___
(e) To some applicants	Yes___	No X
(f) To all applicants	Yes___	No X
(g) To some employees	Yes___	No X
(h) To all employees	Yes X	No___

22. Explain where and how completed I-9 Forms, with their supportive documentation, are maintained and made accessible.
FILED AT 65 MARBLE AVE. OFFICE

23. Does your firm or any of its collective bargaining agreements require job applicants to take a medical examination? Yes___ No X

If yes, is the medical examination given:

(a) Prior to a job offer	Yes___	No___
(b) After a conditional job offer	Yes___	No___
(c) After a job offer	Yes___	No___
(d) To all applicants	Yes___	No___
(e) Only to some applicants	Yes___	No___

If yes, list for which applicants below and attach copies of all medical examination or questionnaire forms and instructions utilized for these examinations.

24. Do you have a written equal employment opportunity (EEO) policy? Yes___ No X

If yes, list the document(s) and page number(s) where these written policies are located.

25. Does the company have a current affirmative action plan(s) (AAP)
N Minorities and Women
N Individuals with handicaps
N Other. Please specify

26. Does your firm or collective bargaining agreement(s) have an internal grievance procedure with respect to EEO complaints? Yes___ No X

If yes, please attach a copy of this policy.

If no, attach a report detailing your firm's unwritten procedure for handling EEO complaints.

27. Has any employee, within the past three years, filed a complaint pursuant to an internal grievance procedure or with any official of your firm with respect to equal employment opportunity? Yes___ No X

If yes, attach an internal complaint log. See instructions.

28. Has your firm, within the past three years, been named as a defendant (or respondent) in any administrative or judicial action where the complainant (plaintiff) alleged violation of any anti-discrimination or affirmative action laws? Yes___ No X

If yes, attach a log. See instructions.

29. Are there any jobs for which there are physical qualifications? Yes X No___

If yes, list the job(s), submit a job description and state the reason(s) for the qualification(s).
CONSTRUCTION LABORER — DUE TO PHYSICAL NATURE OF TRADE.

30. Are there any jobs for which there are age, race, color, national origin, sex, creed, disability, marital status, sexual orientation, or citizenship qualifications? Yes___ No X

If yes, list the job(s), submit a job description and state the reason(s) for the qualification(s).

FOR OFFICIAL USE ONLY: Bid No.

SIGNATURE PAGE

I, (print name of authorized official signing) CHARLES CASARELLA hereby certify that the information submitted herewith is true and complete to the best of my knowledge and belief and submitted with the understanding that compliance with New York City's equal employment requirements, as contained in Chapter 56 of the City Charter, Executive Order No. 50 (1980), as amended, and the implementing Rules and Regulations, is a contractual obligation. I also agree on behalf of the company to submit a certified copy of payroll records to the Division of Labor Services on a monthly basis.

HALCYON CONSTRUCTION
Contractor's Name

CHARLES CASARELLA — PRESIDENT
Name of person who prepared this Employment Report — Title

"SAME"
Name of official authorized to sign on behalf of the contractor — Title

914-741-1112
Telephone Number

Signature of authorized official — 5/25/2016 Date

If contractors are found to be underutilizing minorities and females in any given trade based on Chapter 56 Section 3H, the Division of Labor Services reserves the right to request the contractor's workforce data and to implement an employment program.

Contractors who fail to comply with the above mentioned requirements or are found to be in noncompliance may be subject to the withholding of final payment.

Willful or fraudulent falsifications of any data or information submitted herewith may result in the termination of the contract between the City and the bidder or contractor and in disapproval of future contracts for a period of up to five years. Further, such falsification may result in civil and/and or criminal prosecution.

To the extent permitted by law and consistent with the proper discharge of DLS' responsibilities under Charter Chapter 56 of the City Charter and Executive Order No. 50 (1980) and the implementing Rules and Regulations, all information provided by a contractor to DLS shall be confidential.

Only original signatures accepted.

Sworn to before me this 25th day of May 2016

Notary Public — Authorized Signature — May 25, 2016 Date

MARIA DIOGUARDI
Notary Public, State of New York
No. 01-DI6234276
Qualified in Westchester County
Commission Expires Jan 18, 2019

FOR OFFICIAL USE ONLY: File No.

FORM A. **CONTRACT BID INFORMATION: USE OF SUBCONTRACTORS/TRADES**

1. Do you plan to subcontractor work on this contract? Yes X No___

2. If yes, complete the chart below.

NOTE: All proposed subcontractors with a subcontract in excess of $750,000 must complete an Employment Report for review and approval before the contract may be awarded and work commences.

SUBCONTRACTOR'S NAME*	OWNERSHIP (ENTER APPROPRIATE CODE LETTERS BELOW)	WORK TO BE PERFORMED BY SUBCONTRACTOR	TRADE PROJECTED FOR USE BY SUBCONTRACTOR	PROJECTED DOLLAR VALUE OF SUBCONTRACT
TREE WORK				80,000 -
FLAGMEN				200,000 -
ASP. PAVING				100,000 -
ELECTRICAL				140,000 -
ASBESTOS ABATEMENT				90,000 -
WELDING				500,000 -
INSPECTION				100,000 -
RODENT CONTROL				75,000 -
SHOT CRETE				150,000 -

***If subcontractor is presently unknown, please enter the trade (craft name).**

OWNERSHIP CODES
- W: White
- B: Black
- H: Hispanic
- A: Asian
- N: Native American
- F: Female

FOR OFFICIAL USE ONLY: File No. _____

FORM B: PROJECTED WORKFORCE

TRADE CLASSIFICATION CODES

(J) Journeylevel Workers
(H) Helper
(TOT) Total by Column
(A) Apprentice
(TRN) Trainee

For each trade to be engaged by your company for this project, enter the projected workforce for Males and Females by trade classification on the charts below.

Trade: TIMBERMAN

Union Affiliation, if applicable: 1536

Total (Col. #1-10):

Total Minority, Male & Female (Col. #2,3,4,5,7,8,9, & 10):

Total Female (Col. #6 – 10):

	MALES					FEMALES				
	(1) White Non Hisp.	(2) Black Non Hisp.	(3) Hisp.	(4) Asian	(5) Native Amer.	(6) White Non Hisp.	(7) Black Non Hisp.	(8) Hisp.	(9) Asian	(10) Native Amer.
J	3	1								
H										
A										
TRN										
TOT	3	1								

What are the recruitment sources for you projected hires (i.e., unions, government employment office, job tap center, community outreach)?

UNION

FOR OFFICIAL USE ONLY: File No._____

FORM B: PROJECTED WORKFORCE

Trade: LABORERS

Union Affiliation, if applicable

731

Total (Col. #1-10):

Total Minority, Male & Female (Col. #2,3,4,5,7,8,9, & 10):

Total Female (Col. #6 – 10):

	MALES					FEMALES				
	(1) White Non Hisp.	(2) Black Non Hisp.	(3) Hisp.	(4) Asian	(5) Native Amer.	(6) White Non Hisp.	(7) Black Non Hisp.	(8) Hisp.	(9) Asian	(10) Native Amer.
J	5	3	5							
H										
A										
TRN										
TOT	5	3	5							

What are the recruitment sources for you projected hires (i.e., unions, government employment office, job tap center, community outreach)?

UNIONS

FOR OFFICIAL USE ONLY: File No.

FORM C: CURRENT WORKFORCE

TRADE CLASSIFICATION CODES

(J) Journeylevel Workers
(H) Helper
(TOT) Total by Column
(A) Apprentice
(TRN) Trainee

For each trade currently engaged by your company for all work performed in New York City, enter the current workforce for Males and Females by trade classification on the charts below.

Trade: O.P. ENG.

Union Affiliation, if applicable: 15

Total (Col. #1-10):

Total Minority, Male & Female (Col. #2,3,4,5,7,8,9, & 10):

Total Female (Col. #6 – 10):

	MALES					FEMALES				
	(1) White Non Hisp.	(2) Black Non Hisp.	(3) Hisp.	(4) Asian	(5) Native Amer.	(6) White Non Hisp.	(7) Black Non Hisp.	(8) Hisp.	(9) Asian	(10) Native Amer.
J	1	1	1							
H										
A										
TRN										
TOT	1	1	1							

What are the recruitment sources for you projected hires (i.e., unions, government employment office, job tap center, community outreach)?

UNIONS

FOR OFFICIAL USE ONLY: File No._____

FORM C: CURRENT WORKFORCE

Trade: _____

Union Affiliation, if applicable _____

Total (Col. #1-10): _____

Total Minority, Male & Female (Col. #2,3,4,5,7,8,9, & 10): _____

Total Female (Col. #6 – 10): _____

	MALES					FEMALES				
	(1) White Non Hisp.	(2) Black Non Hisp.	(3) Hisp.	(4) Asian	(5) Native Amer.	(6) White Non Hisp.	(7) Black Non Hisp.	(8) Hisp.	(9) Asian	(10) Native Amer.
J										
H										
A										
TRN										
TOT										

What are the recruitment sources for you projected hires (i.e., unions, government employment office, job tap center, community outreach)?

_____

_____

FOR OFFICIAL USE ONLY: File No._____

(NO TEXT ON THIS PAGE)

Qualification Form

List previous projects completed to meet the special experience requirements for this contract. Please photocopy this form for submission of all required projects.

Name of Contractor: _____

Name of Project: _____

Location of Project: _____

Owner or Owner's representative (Architect or Engineer) who is familiar with the work performed:

Name: _____
Title: _____ Phone Number: _____

Brief description of the Project completed or the Project in progress: _____
_____
_____

Was the Project performed as a prime, a subcontractor or a sub-subcontractor: _____

Amount of Contract, Subcontract or Sub-subcontract: _____

Start Date and Completion Date: _____

****

Name of Contractor: _____

Name of Project: _____

Location of Project: _____

Owner or Owner's representative (Architect or Engineer) who is familiar with the work performed:

Name: _____
Title: _____ Phone Number: _____

Brief description of the Project completed or the Project in progress: _____
_____
_____

Was the Project performed as a prime, a subcontractor or a sub-subcontractor: _____

Amount of Contract, Subcontract or Sub-subcontract: _____

Start Date and Completion Date: _____

(NO TEXT ON THIS PAGE)

ATTACHMENT 1 - BID INFORMATION

PROJECT ID: QED1014
PIN: 8502016WM0005C

Description and Location of Work: Rehabilitation Of Existing Trunk Water Mains In Crescent Street From 34th Avenue To 31st Avenue; 31st Avenue From Crescent Street To 41st Street; And 41st Street From 31st Avenue To 25th Avenue Including Distribution Water Main, Sewer And Traffic Signal Work, Together With All Work Incidental Thereto, Borough Of Queens.

Documents Available At: 30-30 Thomson Avenue
First Floor Bid Procurement Room
Long Island City, New York 11101
8:30 A.M. to 4:00 P.M. - Monday through Friday

Submission of Bids To: 30-30 Thomson Avenue
First Floor Bid Procurement Room
Long Island City, New York 11101
Before 11:00 A.M. on **April 15, 2016**

Bid Opening: 30-30 Thomson Avenue
First Floor Bid Procurement Room
Long Island City, New York 11101

Time and Date: 11:00 A.M. on **April 15, 2016**

Pre-Bid Conference: Yes _____ No X

If Yes, Mandatory: _____ Optional: _____
Time and Date: _____
Location: _____

Bid Security: Bid Security is required in the amount set forth below; provided, however, bid security is not required if the TOTAL BID PRICE set forth on the Bid Form is less than $1,000,000.00.

(1) Bond in an amount not less than 10% of the TOTAL BID PRICE set forth on the Bid Form, OR
(2) Certified Check in an amount not less than 2% of the TOTAL BID PRICE set forth on the Bid Form.

Performance and Payment Security: Required for contracts in the amount of $1,000,000 or more. Performance Security and Payment Security shall each be in an amount equal to 100% of the Contract Price.

Agency Contact Person: Lorraine Holley
Phone: 718-391-2601 FAX: 718-391-2615

(NO TEXT ON THIS PAGE)

BID SCHEDULE

NOTICE TO BIDDERS

Items listed in this Bid Schedule which have one (1) digit followed by a decimal (e.g. 4.02 AG), excluding items beginning with the number "8.01", shall comply with the requirements of the corresponding numerical Sections of the NYCDOT Standard Highway Specifications as amended by Revisions To The New York City Department Of Transportation Standard Highway Specifications and Sewer And Water Main Revisions To Specifications, herein Volume 3 of 3.

Items listed in this Bid Schedule beginning with the number "8.01" (e.g. 8.01 C1) shall comply with the requirements of Specifications For Handling, Transportation And Disposal Of Nonhazardous And Potentially Hazardous Contaminated Materials, herein Volume 3 of 3.

Items listed in this Bid Schedule which have two (2) digits beginning with the number "5" followed by a decimal (e.g. 50.31CC15) shall comply with the requirements of the New York City Department of Environmental Protection (NYCDEP) Standard Sewer and Water Main Specifications dated July 1, 2014, as amended by Sewer And Water Main Revisions To Specifications, herein Volume 3 of 3.

Items listed in this Bid Schedule which have two (2) digits beginning with the number "6" followed by a decimal (e.g. 60.11R612) shall comply with the requirements of the New York City Department of Environmental Protection (NYCDEP) Standard Sewer and Water Main Specifications dated July 1, 2014, as amended by Sewer And Water Main Revisions To Specifications, herein Volume 3 of 3.

Items listed in this Bid Schedule which have two (2) digits beginning with the number "7" followed by a decimal (e.g. 70.31FN) shall comply with the requirements of the New York City Department of Environmental Protection (NYCDEP) Standard Sewer and Water Main Specifications dated July 1, 2014, as amended by Sewer And Water Main Revisions To Specifications, herein Volume 3 of 3.

Items listed in this Bid Schedule beginning with the prefix "T-" (e.g. T-2.15) are Traffic Items which shall be done in accordance with the requirements of Sub-Section 1.06.23.(D) and Section 1.06.49 in the Standard Highway Specifications.

Items listed in this Bid Schedule beginning with the prefix "UTL-" (e.g. UTL-6.01.8) are for Gas Cost Sharing (EP-7) work and shall comply with the requirements of Gas Cost Sharing (EP-7) Standard Specifications, herein Volume 3 of 3.

(NO TEXT ON THIS PAGE)

BID SCHEDULE

NOTE: (1) The Agency may reject a bid if it contains unbalanced bid prices. An unbalanced bid is considered to be one containing lump sum or unit items which do not reflect reasonable actual costs plus a reasonable proportionate share of the Bidder's anticipated profit, overhead costs, and other indirect costs, anticipated for the performance of the items in question.

(2) The following bid prices on Unit Price Contracts are to be paid for the actual quantities of the item numbers in the completed work or structure, and they cover the cost of all work, labor, material, tools, plant and appliances of every description necessary to complete the entire work, as specified, and the removal of all debris, temporary work and appliances.

(3) PLEASE BE SURE A LEGIBLE BID IS ENTERED, IN INK, FOR EACH ITEM.
Alterations must be initialed in ink by the bidder.

(4) The Extended Amount entered in Column 6 shall be the product of the Estimated Quantity in Column 3 times the Unit Price Bid in Column 5.

(5) Prospective bidders must examine the Bid Schedule carefully and, before bidding, must advise the Commissioner, in writing, if any pages are missing, and must request that such missing pages be furnished them. The pages of this Bid Schedule are numbered consecutively, as follows:
B - 3 Through B - 40

PLEASE BE SURE A LEGIBLE BID IS ENTERED FOR EACH ITEM.
THE BIDDER SHALL INSERT THE TOTAL BID PRICE IN
THE BID FORM ON PAGE C-4 OF THIS BID BOOKLET.

NEW YORK CITY DEPARTMENT OF DESIGN AND CONSTRUCTION
DIVISION OF INFRASTRUCTURE - BUREAU OF DESIGN

PROJECT ID: QED1014
CONTRACT PIN: 8502016WM0005C

BID SCHEDULE FORM

COL. 1 SEQ. NO	COL. 2 ITEM NUMBER and DESCRIPTION	COL. 3 ENGINEER'S ESTIMATE OF QUANTITIY	COL. 4 UNIT	COL. 5 UNIT PRICE (IN FIGURES) DOLLARS	CTS	COL. 6 EXTENDED AMOUNT (IN FIGURES) DOLLARS	CTS
001	4.02 AB-R ASPHALTIC CONCRETE WEARING COURSE, 1-1/2" THICK	1,965.00	S.Y.				
002	4.02 AF-R ASPHALTIC CONCRETE WEARING COURSE, 2" THICK	2,100.00	S.Y.				
003	4.02 CA BINDER MIXTURE	577.00	TONS				
004	4.04 B CONCRETE BASE FOR PAVEMENT, VARIABLE THICKNESS FOR TRENCH RESTORATION, CLASS B-32	285.00	C.Y.				
005	4.04 H CONCRETE BASE FOR PAVEMENT, VARIABLE THICKNESS FOR TRENCH RESTORATION, (HIGH-EARLY STRENGTH)	710.00	C.Y.				
006	4.08 BA CONCRETE CURB (21" DEEP)	1,240.00	L.F.				

NEW YORK CITY DEPARTMENT OF DESIGN AND CONSTRUCTION
DIVISION OF INFRASTRUCTURE - BUREAU OF DESIGN

PROJECT ID: QED1014
CONTRACT PIN: 8502016WM0005C

BID SCHEDULE FORM

COL. 1 SEQ. NO	COL. 2 ITEM NUMBER and DESCRIPTION	COL. 3 ENGINEER'S ESTIMATE OF QUANTITIY	COL. 4 UNIT	COL. 5 UNIT PRICE (IN FIGURES) DOLLARS	CTS	COL. 6 EXTENDED AMOUNT (IN FIGURES) DOLLARS	CTS
007	**4.09 AE** STRAIGHT STEEL FACED CONCRETE CURB (21" DEEP)	700.00	L.F.				
008	**4.09 BE** DEPRESSED STEEL FACED CONCRETE CURB (21" DEEP)	145.00	L.F.				
009	**4.09 CE** CORNER STEEL FACED CONCRETE CURB (21" DEEP)	125.00	L.F.				
010	**4.13 AAS** 4" CONCRETE SIDEWALK (UNPIGMENTED)	5,360.00	S.F.				
011	**4.13 ABS** 4" CONCRETE SIDEWALK (PIGMENTED)	2,450.00	S.F.				
012	**4.13 BAS** 7" CONCRETE SIDEWALK (UNPIGMENTED)	900.00	S.F.				

NEW YORK CITY DEPARTMENT OF DESIGN AND CONSTRUCTION
DIVISION OF INFRASTRUCTURE - BUREAU OF DESIGN

PROJECT ID: QED1014
CONTRACT PIN: 8502016WM0005C

BID SCHEDULE FORM

COL. 1 SEQ. NO	COL. 2 ITEM NUMBER and DESCRIPTION	COL. 3 ENGINEER'S ESTIMATE OF QUANTITIY	COL. 4 UNIT	COL. 5 UNIT PRICE (IN FIGURES) DOLLARS	CTS	COL. 6 EXTENDED AMOUNT (IN FIGURES) DOLLARS	CTS
013	4.13 BBS 7" CONCRETE SIDEWALK (PIGMENTED)	700.00	S.F.				
014	4.13 DE EMBEDDED PREFORMED DETECTABLE WARNING UNITS	200.00	S.F.				
015	4.13 DSA SURFACE APPLIED DETECTABLE WARNING UNITS	130.00	S.F.				
016	4.15 TOPSOIL	40.00	C.Y.				
017	4.16 AA TREES REMOVED (4" TO UNDER 12" CALIPER)	11.00	EACH				
018	4.16 AB TREES REMOVED (12" TO UNDER 18" CALIPER)	4.00	EACH				

NEW YORK CITY DEPARTMENT OF DESIGN AND CONSTRUCTION
DIVISION OF INFRASTRUCTURE - BUREAU OF DESIGN

PROJECT ID: QED1014
CONTRACT PIN: 8502016WM0005C

BID SCHEDULE FORM

COL. 1 SEQ. NO	COL. 2 ITEM NUMBER and DESCRIPTION	COL. 3 ENGINEER'S ESTIMATE OF QUANTITIY	COL. 4 UNIT	COL. 5 UNIT PRICE (IN FIGURES) DOLLARS	CTS	COL. 6 EXTENDED AMOUNT (IN FIGURES) DOLLARS	CTS
019	**4.16 AC** TREES REMOVED (18" TO UNDER 24" CALIPER)	2.00	EACH				
020	**4.16 AD** TREES REMOVED (24" CALIPER AND OVER)	1.00	EACH				
021	**4.16 BA505** TREES PLANTED, 2-1/2" TO 3" CALIPER, ALL TYPES, IN 5' X 5' TREE PITS	50.00	EACH				
022	**4.18 A** MAINTENANCE TREE PRUNING (UNDER 12" CAL.)	8.00	EACH				
023	**4.18 B** MAINTENANCE TREE PRUNING (12" TO UNDER 18" CAL.)	1.00	EACH				
024	**4.18 C** MAINTENANCE TREE PRUNING (18" TO UNDER 24" CAL.)	2.00	EACH				

NEW YORK CITY DEPARTMENT OF DESIGN AND CONSTRUCTION
DIVISION OF INFRASTRUCTURE - BUREAU OF DESIGN

PROJECT ID: QED1014
CONTRACT PIN: 8502016WM0005C

BID SCHEDULE FORM

COL. 1 SEQ. NO	COL. 2 ITEM NUMBER and DESCRIPTION	COL. 3 ENGINEER'S ESTIMATE OF QUANTITIY	COL. 4 UNIT	COL. 5 UNIT PRICE (IN FIGURES) DOLLARS	CTS	COL. 6 EXTENDED AMOUNT (IN FIGURES) DOLLARS	CTS
025	4.18 D MAINTENANCE TREE PRUNING (24" CAL. AND OVER)	2.00	EACH				
026	4.21 TREE CONSULTANT	500.00	P/HR				
027	50.31CC12 12" E.S.V.P. COMBINED SEWER, ON CONCRETE CRADLE	450.00	L.F.				
028	50.31CC15 15" E.S.V.P. COMBINED SEWER, ON CONCRETE CRADLE	200.00	L.F.				
029	50.72C0300EB0400 RECONSTRUCTION OF EXISTING 3'-0"W X 4'-0"H EGG-SHAPED BRICK COMBINED SEWER USING SHOTCRETE METHOD	160.00	L.F.				
030	51.21S0A1000E STANDARD MANHOLE TYPE A-1 ON EXISTING SEWER	3.00	EACH				

NEW YORK CITY DEPARTMENT OF DESIGN AND CONSTRUCTION
DIVISION OF INFRASTRUCTURE - BUREAU OF DESIGN

PROJECT ID: QED1014
CONTRACT PIN: 8502016WM0005C

BID SCHEDULE FORM

COL. 1 SEQ. NO	COL. 2 ITEM NUMBER and DESCRIPTION	COL. 3 ENGINEER'S ESTIMATE OF QUANTITIY	COL. 4 UNIT	COL. 5 UNIT PRICE (IN FIGURES) DOLLARS	CTS	COL. 6 EXTENDED AMOUNT (IN FIGURES) DOLLARS	CTS
031	51.21S0A1000V STANDARD MANHOLE TYPE A-1	3.00	EACH				
032	51.21S0A2000E STANDARD MANHOLE TYPE A-2 ON EXISTING SEWER	1.00	EACH				
033	51.21S0A2000V STANDARD MANHOLE TYPE A-2	3.00	EACH				
034	51.22RS RECONSTRUCTION OF EXISTING MANHOLE ON EXISTING SHOTCRETED SEWER	2.00	EACH				
035	51.23RF REPLACEMENT OF EXISTING MANHOLE FRAME AND COVER	5.00	EACH				
036	51.41S001 STANDARD CATCH BASIN, TYPE 1	13.00	EACH				

NEW YORK CITY DEPARTMENT OF DESIGN AND CONSTRUCTION
DIVISION OF INFRASTRUCTURE - BUREAU OF DESIGN

PROJECT ID: QED1014
CONTRACT PIN: 8502016WM0005C

BID SCHEDULE FORM

COL. 1 SEQ. NO	COL. 2 ITEM NUMBER and DESCRIPTION	COL. 3 ENGINEER'S ESTIMATE OF QUANTITIY	COL. 4 UNIT	COL. 5 UNIT PRICE (IN FIGURES) DOLLARS	CTS	COL. 6 EXTENDED AMOUNT (IN FIGURES) DOLLARS	CTS
037	51.41S003 STANDARD CATCH BASIN, TYPE 3	3.00	EACH				
038	51.42S1SO INCREMENTAL COST OF STANDARD CATCH BASIN TYPE 3 WITH CURB PIECE IN LIEU OF STANDARD CATCH BASIN TYPE 1	3.00	EACH				
039	52.11D12 12" DUCTILE IRON PIPE BASIN CONNECTION	400.00	L.F.				
040	52.31V06C12 6" E.S.V.P. SPUR FOR HOUSE CONNECTION ON 12" E.S.V.P. COMBINED SEWER	40.00	EACH				
041	52.31V06C15 6" E.S.V.P. SPUR FOR HOUSE CONNECTION ON 15" E.S.V.P. COMBINED SEWER	5.00	EACH				
042	52.31V08C12 8" E.S.V.P. SPUR FOR HOUSE CONNECTION ON 12" E.S.V.P. COMBINED SEWER	40.00	EACH				

NEW YORK CITY DEPARTMENT OF DESIGN AND CONSTRUCTION
DIVISION OF INFRASTRUCTURE - BUREAU OF DESIGN

PROJECT ID: QED1014
CONTRACT PIN: 8502016WM0005C

BID SCHEDULE FORM

COL. 1 SEQ. NO	COL. 2 ITEM NUMBER and DESCRIPTION	COL. 3 ENGINEER'S ESTIMATE OF QUANTITIY	COL. 4 UNIT	COL. 5 UNIT PRICE (IN FIGURES) DOLLARS	CTS	COL. 6 EXTENDED AMOUNT (IN FIGURES) DOLLARS	CTS
043	52.31V08C15 8" E.S.V.P. SPUR FOR HOUSE CONNECTION ON 15" E.S.V.P. COMBINED SEWER	5.00	EACH				
044	52.41D06R 6" D.I.P. HOUSE CONNECTION DRAIN ON CONCRETE CRADLE (RECONNECTION)	75.00	L.F.				
045	52.41D08R 8" D.I.P. HOUSE CONNECTION DRAIN ON CONCRETE CRADLE (RECONNECTION)	125.00	L.F.				
046	52.41V06R 6" E.S.V.P. HOUSE CONNECTION DRAIN ON CONCRETE CRADLE (RECONNECTION)	125.00	L.F.				
047	52.41V08R 8" E.S.V.P. HOUSE CONNECTION DRAIN ON CONCRETE CRADLE (RECONNECTION)	125.00	L.F.				
048	53.11DR TELEVISION INSPECTION AND DIGITAL AUDIO-VISUAL RECORDING OF SEWERS	1,300.00	L.F.				

NEW YORK CITY DEPARTMENT OF DESIGN AND CONSTRUCTION
DIVISION OF INFRASTRUCTURE - BUREAU OF DESIGN

PROJECT ID: QED1014
CONTRACT PIN: 8502016WM0005C

BID SCHEDULE FORM

COL. 1 SEQ. NO	COL. 2 ITEM NUMBER and DESCRIPTION	COL. 3 ENGINEER'S ESTIMATE OF QUANTITIY	COL. 4 UNIT	COL. 5 UNIT PRICE (IN FIGURES) DOLLARS	CTS	COL. 6 EXTENDED AMOUNT (IN FIGURES) DOLLARS	CTS
049	54.11SC SEWER CLEANING	160.00	L.F.				
050	54.21PC PORTLAND CEMENT (TYPE V) - INJECTION GROUTING	100.00	BAGS				
051	54.31SR SHOTCRETE FOR REPAIR WORK	500.00	C.F.				
052	6.02 AAN UNCLASSIFIED EXCAVATION	801.00	C.Y.				
053	6.02 XSCW INCREMENTAL COST FOR USING SPECIAL CARE WORK METHODS NEAR (FROM 3 FEET TO 50 FEET) TRANSIT FACILITIES	130.00	C.Y.				
054	6.25 RS TEMPORARY SIGNS	3,330.00	S.F.				

NEW YORK CITY DEPARTMENT OF DESIGN AND CONSTRUCTION
DIVISION OF INFRASTRUCTURE - BUREAU OF DESIGN

PROJECT ID: QED1014
CONTRACT PIN: 8502016WM0005C

BID SCHEDULE FORM

COL. 1 SEQ. NO	COL. 2 ITEM NUMBER and DESCRIPTION	COL. 3 ENGINEER'S ESTIMATE OF QUANTITIY	COL. 4 UNIT	COL. 5 UNIT PRICE (IN FIGURES) DOLLARS	CTS	COL. 6 EXTENDED AMOUNT (IN FIGURES) DOLLARS	CTS
055	6.26 TIMBER CURB	7,610.00	L.F.				
056	6.28 AA LIGHTED TIMBER BARRICADES	2,000.00	L.F.				
057	6.34 ACT TEMPORARY CHAIN LINK FENCE, 6'-0" HIGH	9,035.00	L.F.				
058	6.34 ACTP TEMPORARY CHAIN LINK FENCE, 6'-0" HIGH (WITH TOP AND BOTTOM RAILS AND POSTS MOUNTED ON STEEL PLATES)	9,035.00	L.F.				
059	6.40 D ENGINEER'S FIELD OFFICE (TYPE D)	30.00	MONTH				
060	6.44 THERMOPLASTIC REFLECTORIZED PAVEMENT MARKINGS (4" WIDE)	20,830.00	L.F.				

NEW YORK CITY DEPARTMENT OF DESIGN AND CONSTRUCTION
DIVISION OF INFRASTRUCTURE - BUREAU OF DESIGN

PROJECT ID: QED1014
CONTRACT PIN: 8502016WM0005C

BID SCHEDULE FORM

COL. 1 SEQ. NO	COL. 2 ITEM NUMBER and DESCRIPTION	COL. 3 ENGINEER'S ESTIMATE OF QUANTITIY	COL. 4 UNIT	COL. 5 UNIT PRICE (IN FIGURES) DOLLARS	CTS	COL. 6 EXTENDED AMOUNT (IN FIGURES) DOLLARS	CTS
061	6.49 TEMPORARY PAVEMENT MARKINGS (4" WIDE)	17,955.00	L.F.				
062	6.50 CLEANING OF DRAINAGE STRUCTURES	1.00	EACH				
063	6.52 CG CROSSING GUARD	7,080.00	P/HR				
064	6.53 REMOVE EXISTING LANE MARKINGS (4" WIDE)	17,955.00	L.F.				
065	6.59 P TEMPORARY CONCRETE BARRIER	10,385.00	L.F.				
066	6.87 PLASTIC BARRELS	2,080.00	EACH				

NEW YORK CITY DEPARTMENT OF DESIGN AND CONSTRUCTION
DIVISION OF INFRASTRUCTURE - BUREAU OF DESIGN

PROJECT ID: QED1014
CONTRACT PIN: 8502016WM0005C

BID SCHEDULE FORM

COL. 1 SEQ. NO	COL. 2 ITEM NUMBER and DESCRIPTION	COL. 3 ENGINEER'S ESTIMATE OF QUANTITIY	COL. 4 UNIT	COL. 5 UNIT PRICE (IN FIGURES) DOLLARS	CTS	COL. 6 EXTENDED AMOUNT (IN FIGURES) DOLLARS	CTS
067	**60.11R520** FURNISHING AND DELIVERING 20-INCH DUCTILE IRON RESTRAINED JOINT PIPE (CLASS 55)	100.00	L.F.				
068	**60.11R606** FURNISHING AND DELIVERING 6-INCH DUCTILE IRON RESTRAINED JOINT PIPE (CLASS 56)	480.00	L.F.				
069	**60.11R608** FURNISHING AND DELIVERING 8-INCH DUCTILE IRON RESTRAINED JOINT PIPE (CLASS 56)	120.00	L.F.				
070	**60.11R612** FURNISHING AND DELIVERING 12-INCH DUCTILE IRON RESTRAINED JOINT PIPE (CLASS 56)	420.00	L.F.				
071	**60.12D06** LAYING 6-INCH DUCTILE IRON PIPE AND FITTINGS	550.00	L.F.				
072	**60.12D08** LAYING 8-INCH DUCTILE IRON PIPE AND FITTINGS	135.00	L.F.				

NEW YORK CITY DEPARTMENT OF DESIGN AND CONSTRUCTION
DIVISION OF INFRASTRUCTURE - BUREAU OF DESIGN

PROJECT ID: QED1014
CONTRACT PIN: 8502016WM0005C

BID SCHEDULE FORM

COL. 1 SEQ. NO	COL. 2 ITEM NUMBER and DESCRIPTION	COL. 3 ENGINEER'S ESTIMATE OF QUANTITIY	COL. 4 UNIT	COL. 5 UNIT PRICE (IN FIGURES) DOLLARS	CTS	COL. 6 EXTENDED AMOUNT (IN FIGURES) DOLLARS	CTS
073	60.12D12 LAYING 12-INCH DUCTILE IRON PIPE AND FITTINGS	495.00	L.F.				
074	60.12D20 LAYING 20-INCH DUCTILE IRON PIPE AND FITTINGS	130.00	L.F.				
075	60.13M0A24 FURNISHING AND DELIVERING DUCTILE IRON MECHANICAL JOINT 24 -INCH DIAMETER AND SMALLER FITTINGS, INCLUDING WEDGE TYPE RETAINER GLANDS	11.00	TONS				
076	60.21SP4T48 FURNISHING, DELIVERING AND LAYING 48-INCH STRAIGHT STEEL PIPE, 1/2-INCH WALL THICKNESS	100.00	L.F.				
077	60.21SP4T52 FURNISHING, DELIVERING AND LAYING 52-INCH STRAIGHT STEEL PIPE, 1/2-INCH WALL THICKNESS	1,250.00	L.F.				
078	60.21SP5T60 FURNISHING, DELIVERING AND LAYING 60-INCH STRAIGHT STEEL PIPE, 5/8-INCH WALL THICKNESS	50.00	L.F.				

NEW YORK CITY DEPARTMENT OF DESIGN AND CONSTRUCTION
DIVISION OF INFRASTRUCTURE - BUREAU OF DESIGN

PROJECT ID: QED1014
CONTRACT PIN: 8502016WM0005C

BID SCHEDULE FORM

COL. 1 SEQ. NO	COL. 2 ITEM NUMBER and DESCRIPTION	COL. 3 ENGINEER'S ESTIMATE OF QUANTITIY	COL. 4 UNIT	COL. 5 UNIT PRICE (IN FIGURES) DOLLARS	CTS	COL. 6 EXTENDED AMOUNT (IN FIGURES) DOLLARS	CTS
079	60.21SP6T72 FURNISHING, DELIVERING AND LAYING 72-INCH STRAIGHT STEEL PIPE, 3/4-INCH WALL THICKNESS	200.00	L.F.				
080	60.22BR4T52 FURNISHING, DELIVERING AND LAYING 52-INCH STEEL BENDS AND REDUCERS, 1/2-INCH WALL THICKNESS	75.00	L.F.				
081	60.22BR5T60 FURNISHING, DELIVERING AND LAYING 60-INCH STEEL BENDS AND REDUCERS, 5/8-INCH WALL THICKNESS	7.00	L.F.				
082	60.22BR6T72 FURNISHING, DELIVERING AND LAYING 72-INCH STEEL BENDS AND REDUCERS, 3/4-INCH WALL THICKNESS	60.00	L.F.				
083	60.23ST48T52 FURNISHING, DELIVERING AND INSTALLING 52-INCH X 48-INCH STEEL TEE	1.00	EACH				
084	60.25PSO FURNISHING, DELIVERING AND INSTALLING PLATE STEEL OUTLETS ON STEEL PIPE, ACCESS MANHOLE OUTLETS WITH COVERS, AND NUTS AND BOLTS COMPLETE	34,200.00	LBS.				

NEW YORK CITY DEPARTMENT OF DESIGN AND CONSTRUCTION
DIVISION OF INFRASTRUCTURE - BUREAU OF DESIGN

PROJECT ID: QED1014
CONTRACT PIN: 8502016WM0005C

BID SCHEDULE FORM

COL. 1 SEQ. NO	COL. 2 ITEM NUMBER and DESCRIPTION	COL. 3 ENGINEER'S ESTIMATE OF QUANTITIY	COL. 4 UNIT	COL. 5 UNIT PRICE (IN FIGURES) DOLLARS	CTS	COL. 6 EXTENDED AMOUNT (IN FIGURES) DOLLARS	CTS
085	60.27RSC48 FURNISHING, DELIVERING AND INSTALLING 48-INCH DIAMETER BOLTED, SPLIT SLEEVE-TYPE RESTRAINED COUPLING	4.00	EACH				
086	60.29CP FURNISHING, INSTALLING AND TESTING CORROSION CONTROL AND/OR CATHODIC PROTECTION SYSTEM	1.00	L.S.				
087	60.61SLM52S FURNISHING, DELIVERING AND INSTALLING 52-INCH STRAIGHT STEEL WATER MAIN PIPE BY SLIP-LINING METHOD	7,100.00	L.F.				
088	61.11DFM06 FURNISHING AND DELIVERING 6-INCH FLANGED-MECHANICAL JOINT DUCTILE IRON GATE VALVE COMPLETE WITH WEDGE TYPE RETAINER GLAND	18.00	EACH				
089	61.11DFM12 FURNISHING AND DELIVERING 12-INCH FLANGED-MECHANICAL JOINT DUCTILE IRON GATE VALVE COMPLETE WITH WEDGE TYPE RETAINER GLAND	1.00	EACH				

BID SCHEDULE FORM

COL. 1 SEQ. NO	COL. 2 ITEM NUMBER and DESCRIPTION	COL. 3 ENGINEER'S ESTIMATE OF QUANTITIY	COL. 4 UNIT	COL. 5 UNIT PRICE (IN FIGURES) DOLLARS	CTS	COL. 6 EXTENDED AMOUNT (IN FIGURES) DOLLARS	CTS
090	**61.11DFM20** FURNISHING AND DELIVERING 20-INCH FLANGED-MECHANICAL JOINT DUCTILE IRON GATE VALVE COMPLETE WITH WEDGE TYPE RETAINER GLAND	1.00	EACH				
091	**61.11DMM12** FURNISHING AND DELIVERING 12-INCH MECHANICAL JOINT DUCTILE IRON GATE VALVE COMPLETE WITH WEDGE TYPE RETAINER GLANDS	2.00	EACH				
092	**61.11DMM20** FURNISHING AND DELIVERING 20-INCH MECHANICAL JOINT DUCTILE IRON GATE VALVE COMPLETE WITH WEDGE TYPE RETAINER GLANDS	1.00	EACH				
093	**61.11TWC04** FURNISHING AND DELIVERING 4-INCH WET CONNECTION TAPPING VALVE COMPLETE WITH WEDGE TYPE RETAINER GLANDS	5.00	EACH				
094	**61.11TWC06** FURNISHING AND DELIVERING 6-INCH WET CONNECTION TAPPING VALVE COMPLETE WITH WEDGE TYPE RETAINER GLANDS	5.00	EACH				

NEW YORK CITY DEPARTMENT OF DESIGN AND CONSTRUCTION
DIVISION OF INFRASTRUCTURE - BUREAU OF DESIGN

PROJECT ID: QED1014
CONTRACT PIN: 8502016WM0005C

BID SCHEDULE FORM

COL. 1 SEQ. NO	COL. 2 ITEM NUMBER and DESCRIPTION	COL. 3 ENGINEER'S ESTIMATE OF QUANTITIY	COL. 4 UNIT	COL. 5 UNIT PRICE (IN FIGURES) DOLLARS	CTS	COL. 6 EXTENDED AMOUNT (IN FIGURES) DOLLARS	CTS
095	61.11TWC08 FURNISHING AND DELIVERING 8-INCH WET CONNECTION TAPPING VALVE COMPLETE WITH WEDGE TYPE RETAINER GLANDS	3.00	EACH				
096	61.12DFM06 SETTING 6-INCH FLANGED-MECHANICAL JOINT DUCTILE IRON GATE VALVE COMPLETE WITH WEDGE TYPE RETAINER GLAND	18.00	EACH				
097	61.12DFM12 SETTING 12-INCH FLANGED-MECHANICAL JOINT DUCTILE IRON GATE VALVE COMPLETE WITH WEDGE TYPE RETAINER GLAND	1.00	EACH				
098	61.12DFM20 SETTING 20-INCH FLANGED-MECHANICAL JOINT DUCTILE IRON GATE VALVE COMPLETE WITH WEDGE TYPE RETAINER GLAND	1.00	EACH				
099	61.12DMM12 SETTING 12-INCH MECHANICAL JOINT DUCTILE IRON GATE VALVE COMPLETE WITH WEDGE TYPE RETAINER GLANDS	2.00	EACH				
100	61.12DMM20 SETTING 20-INCH MECHANICAL JOINT DUCTILE IRON GATE VALVE COMPLETE WITH WEDGE TYPE RETAINER GLANDS	1.00	EACH				

NEW YORK CITY DEPARTMENT OF DESIGN AND CONSTRUCTION
DIVISION OF INFRASTRUCTURE - BUREAU OF DESIGN

PROJECT ID: QED1014
CONTRACT PIN: 8502016WM0005C

BID SCHEDULE FORM

COL. 1 SEQ. NO	COL. 2 ITEM NUMBER and DESCRIPTION	COL. 3 ENGINEER'S ESTIMATE OF QUANTITIY	COL. 4 UNIT	COL. 5 UNIT PRICE (IN FIGURES) DOLLARS	CTS	COL. 6 EXTENDED AMOUNT (IN FIGURES) DOLLARS	CTS
101	**61.12TWC04** SETTING 4-INCH WET CONNECTION TAPPING VALVE COMPLETE WITH WEDGE TYPE RETAINER GLANDS	5.00	EACH				
102	**61.12TWC06** SETTING 6-INCH WET CONNECTION TAPPING VALVE COMPLETE WITH WEDGE TYPE RETAINER GLANDS	5.00	EACH				
103	**61.12TWC08** SETTING 8-INCH WET CONNECTION TAPPING VALVE COMPLETE WITH WEDGE TYPE RETAINER GLANDS	3.00	EACH				
104	**62.11SD** FURNISHING AND DELIVERING HYDRANTS	9.00	EACH				
105	**62.12SG** SETTING HYDRANTS COMPLETE WITH WEDGE TYPE RETAINER GLANDS	9.00	EACH				
106	**62.13RH** REMOVING HYDRANTS	7.00	EACH				

NEW YORK CITY DEPARTMENT OF DESIGN AND CONSTRUCTION
DIVISION OF INFRASTRUCTURE - BUREAU OF DESIGN

PROJECT ID: QED1014
CONTRACT PIN: 8502016WM0005C

BID SCHEDULE FORM

COL. 1 SEQ. NO	COL. 2 ITEM NUMBER and DESCRIPTION	COL. 3 ENGINEER'S ESTIMATE OF QUANTITIY	COL. 4 UNIT	COL. 5 UNIT PRICE (IN FIGURES) DOLLARS	CTS	COL. 6 EXTENDED AMOUNT (IN FIGURES) DOLLARS	CTS
107	62.14FS FURNISHING, DELIVERING AND INSTALLING HYDRANT FENDERS	27.00	EACH				
108	63.11MH FURNISHING, DELIVERING AND INSTALLING 36-INCH CAST IRON MANHOLE HEADS AND COVERS	12.00	TONS				
109	63.11MS FURNISHING, DELIVERING AND INSTALLING MANHOLE STEPS TYPE PS2-PF	300.00	EACH				
110	63.11VC FURNISHING AND DELIVERING VARIOUS CASTINGS	41.00	TONS				
111	64.11EL WITHDRAWING AND REPLACING HOUSE SERVICES USING 1-1/2-INCH OR LARGER SCREW TAPS	12.00	EACH				
112	64.11ST WITHDRAWING AND REPLACING HOUSE SERVICES USING SMALLER THAN 1-1/2-INCH SCREW TAPS	12.00	EACH				

NEW YORK CITY DEPARTMENT OF DESIGN AND CONSTRUCTION
DIVISION OF INFRASTRUCTURE - BUREAU OF DESIGN

PROJECT ID: QED1014
CONTRACT PIN: 8502016WM0005C

BID SCHEDULE FORM

COL. 1 SEQ. NO	COL. 2 ITEM NUMBER and DESCRIPTION	COL. 3 ENGINEER'S ESTIMATE OF QUANTITIY	COL. 4 UNIT	COL. 5 UNIT PRICE (IN FIGURES) DOLLARS	CTS	COL. 6 EXTENDED AMOUNT (IN FIGURES) DOLLARS	CTS
113	**64.12COEG** CUTTING AND OFFSETTING HOUSE SERVICE WATER CONNECTIONS (EQUAL TO OR GREATER THAN 3-INCH DIAMETER)	12.00	L.F.				
114	**64.12COLT** CUTTING AND OFFSETTING HOUSE SERVICE WATER CONNECTIONS (LESS THAN 3-INCH DIAMETER)	12.00	L.F.				
115	**64.12ESEG** EXTENDING HOUSE SERVICE WATER CONNECTIONS (EQUAL TO OR GREATER THAN 3-INCH DIAMETER)	12.00	L.F.				
116	**64.12ESLT** EXTENDING HOUSE SERVICE WATER CONNECTIONS (LESS THAN 3-INCH DIAMETER)	12.00	L.F.				
117	**64.13WC08** FURNISHING, DELIVERING AND INSTALLING WET CONNECTION SLEEVE ON 8-INCH WATER MAIN PIPE WITH VARIOUS OUTLETS	3.00	EACH				
118	**64.13WC12** FURNISHING, DELIVERING AND INSTALLING WET CONNECTION SLEEVE ON 12-INCH WATER MAIN PIPE WITH VARIOUS OUTLETS	5.00	EACH				

NEW YORK CITY DEPARTMENT OF DESIGN AND CONSTRUCTION
DIVISION OF INFRASTRUCTURE - BUREAU OF DESIGN

PROJECT ID: QED1014
CONTRACT PIN: 8502016WM0005C

BID SCHEDULE FORM

COL. 1 SEQ. NO	COL. 2 ITEM NUMBER and DESCRIPTION	COL. 3 ENGINEER'S ESTIMATE OF QUANTITIY	COL. 4 UNIT	COL. 5 UNIT PRICE (IN FIGURES) DOLLARS	CTS	COL. 6 EXTENDED AMOUNT (IN FIGURES) DOLLARS	CTS
119	**64.13WC20** FURNISHING, DELIVERING AND INSTALLING WET CONNECTION SLEEVE ON 20-INCH WATER MAIN PIPE WITH VARIOUS OUTLETS	5.00	EACH				
120	**65.11BR** FURNISHING, DELIVERING AND INSTALLING BANDS, RODS, WASHERS, ETC., COMPLETE, FOR RESTRAINING JOINTS	225.00	LBS.				
121	**65.21PS** FURNISHING AND PLACING POLYETHYLENE SLEEVE **Unit price bid shall not be less than: $ 0.50**	770.00	L.F.				
122	**65.31FF** FURNISHING, DELIVERING AND PLACING FILTER FABRIC **Unit price bid shall not be less than: $ 0.10**	35,050.00	S.F.				
123	**65.41PS06** FURNISHING, DELIVERING AND INSTALLING 6-INCH PIPE-TO-WALL PENETRATION SEAL, INCLUDING STEEL SLEEVE AND ANCHOR/WATER STOP PLATE	18.00	EACH				

NEW YORK CITY DEPARTMENT OF DESIGN AND CONSTRUCTION
DIVISION OF INFRASTRUCTURE - BUREAU OF DESIGN

PROJECT ID: QED1014
CONTRACT PIN: 8502016WM0005C

BID SCHEDULE FORM

COL. 1 SEQ. NO	COL. 2 ITEM NUMBER and DESCRIPTION	COL. 3 ENGINEER'S ESTIMATE OF QUANTITIY	COL. 4 UNIT	COL. 5 UNIT PRICE (IN FIGURES) DOLLARS	CTS	COL. 6 EXTENDED AMOUNT (IN FIGURES) DOLLARS	CTS
124	**65.41PS12** FURNISHING, DELIVERING AND INSTALLING 12-INCH PIPE-TO-WALL PENETRATION SEAL, INCLUDING STEEL SLEEVE AND ANCHOR/WATER STOP PLATE	2.00	EACH				
125	**65.41PS20** FURNISHING, DELIVERING AND INSTALLING 20-INCH PIPE-TO-WALL PENETRATION SEAL, INCLUDING STEEL SLEEVE AND ANCHOR/WATER STOP PLATE	2.00	EACH				
126	**65.41PS48** FURNISHING, DELIVERING AND INSTALLING 48-INCH PIPE-TO-WALL PENETRATION SEAL, INCLUDING STEEL SLEEVE AND ANCHOR/WATER STOP PLATE	9.00	EACH				
127	**65.41PS60** FURNISHING, DELIVERING AND INSTALLING 60-INCH PIPE-TO-WALL PENETRATION SEAL, INCLUDING STEEL SLEEVE AND ANCHOR/WATER STOP PLATE	2.00	EACH				
128	**65.41PS72** FURNISHING, DELIVERING AND INSTALLING 72-INCH PIPE-TO-WALL PENETRATION SEAL, INCLUDING STEEL SLEEVE AND ANCHOR/WATER STOP PLATE	4.00	EACH				

NEW YORK CITY DEPARTMENT OF DESIGN AND CONSTRUCTION
DIVISION OF INFRASTRUCTURE - BUREAU OF DESIGN

PROJECT ID: QED1014
CONTRACT PIN: 8502016WM0005C

BID SCHEDULE FORM

COL. 1 SEQ. NO	COL. 2 ITEM NUMBER and DESCRIPTION	COL. 3 ENGINEER'S ESTIMATE OF QUANTITIY	COL. 4 UNIT	COL. 5 UNIT PRICE (IN FIGURES) DOLLARS	CTS	COL. 6 EXTENDED AMOUNT (IN FIGURES) DOLLARS	CTS
129	65.51PC FURNISHING AND PLACING CAST-IN-PLACE CONCRETE CLASS 40 AND PRECAST CONCRETE CLASS 50	400.00	C.Y.				
130	65.61SS FURNISHING, DELIVERING AND PLACING STRUCTURAL, REINFORCING AND MISCELLANEOUS STEEL	40,000.00	LBS.				
131	65.71SG FURNISHING, DELIVERING AND PLACING SCREENED GRAVEL OR SCREENED BROKEN STONE BEDDING	325.00	C.Y.				
132	7.13 B MAINTENANCE OF SITE **Unit price bid shall not be less than: $ 8,000.00**	24.00	MONTH				
133	7.36 PEDESTRIAN STEEL BARRICADES	8,845.00	L.F.				
134	7.88 AA RODENT INFESTATION SURVEY AND MONITORING **Unit price bid shall not be less than: $ 40,000.00**	1.00	L.S.				

NEW YORK CITY DEPARTMENT OF DESIGN AND CONSTRUCTION
DIVISION OF INFRASTRUCTURE - BUREAU OF DESIGN

PROJECT ID: QED1014
CONTRACT PIN: 8502016WM0005C

BID SCHEDULE FORM

COL. 1 SEQ. NO	COL. 2 ITEM NUMBER and DESCRIPTION	COL. 3 ENGINEER'S ESTIMATE OF QUANTITIY	COL. 4 UNIT	COL. 5 UNIT PRICE (IN FIGURES) DOLLARS	CTS	COL. 6 EXTENDED AMOUNT (IN FIGURES) DOLLARS	CTS
135	7.88 AB RODENT BAIT STATIONS Unit price bid shall not be less than: $ 60.00	410.00	EACH				
136	7.88 AC BAITING OF RODENT BAIT STATIONS Unit price bid shall not be less than: $ 9.50	410.00	EACH				
137	7.88 AD WATERBUG BAIT APPLICATIONS Unit price bid shall not be less than: $ 65.00	710.00	BLOCK				
138	70.21DK DECKING	3,800.00	S.Y.				
139	70.31FN FENCING Unit price bid shall not be less than: $ 2.00	6,850.00	L.F.				
140	70.51EO EXCAVATION OF BOULDERS IN OPEN CUT Unit price bid shall not be less than: $ 75.00	60.00	C.Y.				

NEW YORK CITY DEPARTMENT OF DESIGN AND CONSTRUCTION
DIVISION OF INFRASTRUCTURE - BUREAU OF DESIGN

PROJECT ID: QED1014
CONTRACT PIN: 8502016WM0005C

BID SCHEDULE FORM

COL. 1 SEQ. NO	COL. 2 ITEM NUMBER and DESCRIPTION	COL. 3 ENGINEER'S ESTIMATE OF QUANTITIY	COL. 4 UNIT	COL. 5 UNIT PRICE (IN FIGURES) DOLLARS	CTS	COL. 6 EXTENDED AMOUNT (IN FIGURES) DOLLARS	CTS
141	70.61RE ROCK EXCAVATION	510.00	C.Y.				
142	70.71SB STONE BALLAST **Unit price bid shall not be less than: $ 15.00**	10.00	C.Y.				
143	70.81CB CLEAN BACKFILL **Unit price bid shall not be less than: $ 15.00**	1,150.00	C.Y.				
144	70.91SW12 FURNISHING AND PLACING SHEETING AND BRACING IN TRENCH FOR WATER MAIN PIPE 12-INCH IN DIAMETER AND LESS	4,000.00	S.F.				
145	70.91SW20 FURNISHING AND PLACING SHEETING AND BRACING IN TRENCH FOR WATER MAIN PIPE 20-INCH IN DIAMETER	1,450.00	S.F.				
146	73.11AB ADDITIONAL BRICK MASONRY **Unit price bid shall not be less than: $ 62.50**	15.00	C.Y.				

NEW YORK CITY DEPARTMENT OF DESIGN AND CONSTRUCTION
DIVISION OF INFRASTRUCTURE - BUREAU OF DESIGN

PROJECT ID: QED1014
CONTRACT PIN: 8502016WM0005C

BID SCHEDULE FORM

COL. 1 SEQ. NO	COL. 2 ITEM NUMBER and DESCRIPTION	COL. 3 ENGINEER'S ESTIMATE OF QUANTITIY	COL. 4 UNIT	COL. 5 UNIT PRICE (IN FIGURES) DOLLARS	CTS	COL. 6 EXTENDED AMOUNT (IN FIGURES) DOLLARS	CTS
147	73.21AC ADDITIONAL CONCRETE **Unit price bid shall not be less than: $ 62.50**	42.00	C.Y.				
148	73.31AE0 ADDITIONAL EARTH EXCAVATION INCLUDING TEST PITS (ALL DEPTHS) **Unit price bid shall not be less than: $ 20.00**	130.00	C.Y.				
149	73.41AG ADDITIONAL SELECT GRANULAR BACKFILL **Unit price bid shall not be less than: $ 15.00**	126.00	C.Y.				
150	73.51AS ADDITIONAL STEEL REINFORCING BARS **Unit price bid shall not be less than: $ 1.00**	100.00	LBS.				
151	76.11CR CONSTRUCTION REPORT	1.00	L.S.				
152	76.21MR MONITORING AND POST-CONSTRUCTION REPORT	1.00	L.S.				

NEW YORK CITY DEPARTMENT OF DESIGN AND CONSTRUCTION
DIVISION OF INFRASTRUCTURE - BUREAU OF DESIGN

PROJECT ID: QED1014
CONTRACT PIN: 8502016WM0005C

BID SCHEDULE FORM

COL. 1 SEQ. NO	COL. 2 ITEM NUMBER and DESCRIPTION	COL. 3 ENGINEER'S ESTIMATE OF QUANTITIY	COL. 4 UNIT	COL. 5 UNIT PRICE (IN FIGURES) DOLLARS	CTS	COL. 6 EXTENDED AMOUNT (IN FIGURES) DOLLARS	CTS
153	79.11AATA ALLOWANCE FOR ASBESTOS ABATEMENT WORK PERFORMED ON EXISTING TRANSIT AUTHORITY DUCT INSULATION (REMOVAL OF ACM, REPLACEMENT WITH NON-ACM, AND SUPPORT AND PROTECTION OF EXISTING TRANSIT AUTHORITY DUCT, COMPLETE) **PRICE BID SHALL BE FOR THE FIXED SUM OF $ 4,500.00**	1.00	F.S.	4,500	00	4,500	00
154	8.01 C1 HANDLING, TRANSPORTING AND DISPOSAL OF NON-HAZARDOUS CONTAMINATED SOIL	6,000.00	TONS				
155	8.01 C2 SAMPLING AND TESTING OF CONTAMINATED/POTENTIALLY HAZARDOUS SOIL FOR DISPOSAL PURPOSES	15.00	SETS				
156	8.01 H HANDLING, TRANSPORTING AND DISPOSAL OF HAZARDOUS SOIL	100.00	TONS				
157	8.01 S HEALTH AND SAFETY	1.00	L.S.				

BID SCHEDULE FORM

COL. 1 SEQ. NO	COL. 2 ITEM NUMBER and DESCRIPTION	COL. 3 ENGINEER'S ESTIMATE OF QUANTITIY	COL. 4 UNIT	COL. 5 UNIT PRICE (IN FIGURES) DOLLARS	CTS	COL. 6 EXTENDED AMOUNT (IN FIGURES) DOLLARS	CTS
158	8.01 W1 REMOVAL, TREATMENT, AND DISCHARGE/DISPOSAL OF CONTAMINATED WATER	7.00	DAY				
159	8.01 W2 SAMPLING AND TESTING OF CONTAMINATED WATER	2.00	SETS				
160	8.08 VARIABLE MESSAGE BOARD	4.00	EACH				
161	9.04 HW ALLOWANCE FOR ANTI-FREEZE ADDITIVE IN CONCRETE PRICE BID SHALL BE FOR THE FIXED SUM OF $ 7,000.00	1.00	F.S.	7,000	00	7,000	00
162	9.99 FLASHING ARROW BOARD	7.00	EACH				

NEW YORK CITY DEPARTMENT OF DESIGN AND CONSTRUCTION
DIVISION OF INFRASTRUCTURE - BUREAU OF DESIGN

PROJECT ID: QED1014
CONTRACT PIN: 8502016WM0005C

BID SCHEDULE FORM

COL. 1 SEQ. NO	COL. 2 ITEM NUMBER and DESCRIPTION	COL. 3 ENGINEER'S ESTIMATE OF QUANTITIY	COL. 4 UNIT	COL. 5 UNIT PRICE (IN FIGURES) DOLLARS	CTS	COL. 6 EXTENDED AMOUNT (IN FIGURES) DOLLARS	CTS
163	T-1.20 REMOVE TYPE "M" SERIES FOUNDATION	3.00	EACH				
164	T-1.3 INSTALL TYPE "M2-5S" FOUNDATION	3.00	EACH				
165	T-2.24 REMOVE TYPE "M" SERIES POST	3.00	EACH				
166	T-2.28 REMOVE MAST ARM FROM ANY POST	1.00	EACH				
167	T-2.32 INSTALL STREET LIGHT LUMINAIRE SUPPORT ARM ON "M-2" POST	1.00	EACH				
168	T-2.4 INSTALL TYPE "M-2" POST	3.00	EACH				

BID SCHEDULE FORM

COL. 1 SEQ. NO	COL. 2 ITEM NUMBER and DESCRIPTION	COL. 3 ENGINEER'S ESTIMATE OF QUANTITIY	COL. 4 UNIT	COL. 5 UNIT PRICE (IN FIGURES) DOLLARS	CTS	COL. 6 EXTENDED AMOUNT (IN FIGURES) DOLLARS	CTS
169	T-20220 c) FURNISH 1-1/4" ANCHOR BOLT ASSEMBLIES FOR M-2 (EACH) (4 REQUIRED PER POST)	12.00	EACH				
170	T-3.1 INSTALL "ONE-WAY" SIGNAL UNIT ON MAST ARM OR TOP OF TRAFFIC POST	9.00	EACH				
171	T-3.12 FURNISH AND INSTALL LOUVERS ON SIGNAL UNIT	1.00	EACH				
172	T-3.18 REMOVE SIGNAL HEAD FROM ANY TYPE POST	3.00	EACH				
173	T-3.21 REMOVE PEDESTRIAN SIGNAL OR SIGN UNIT OR OTHER ILLUMINATED SIGNS FROM ANY POST	6.00	EACH				
174	T-3.6 INSTALL PEDESTRIAN SIGNAL ON ANY TYPE POST	6.00	EACH				

NEW YORK CITY DEPARTMENT OF DESIGN AND CONSTRUCTION
DIVISION OF INFRASTRUCTURE - BUREAU OF DESIGN

PROJECT ID: QED1014
CONTRACT PIN: 8502016WM0005C

BID SCHEDULE FORM

COL. 1 SEQ. NO	COL. 2 ITEM NUMBER and DESCRIPTION	COL. 3 ENGINEER'S ESTIMATE OF QUANTITIY	COL. 4 UNIT	COL. 5 UNIT PRICE (IN FIGURES) DOLLARS	CTS	COL. 6 EXTENDED AMOUNT (IN FIGURES) DOLLARS	CTS
175	T-30013L FURNISH ADJUSTABLE 3 SECTION 1-WAY, DIE CAST ALUMINUM TRAFFIC SIGNALS 8" - W/LED LENS	9.00	EACH				
176	T-31210 h) "HUB" ASSEMBLY *ASSEMBLY IS EQUAL TO ONE PAIR	3.00	EACH				
177	T-31225 c) "3MS"	3.00	EACH				
178	T-31351 g) "VB-2P" ASSEMBLY *ASSEMBLY IS EQUAL TO ONE PAIR	3.00	EACH				
179	T-33000L FURNISH POLYCARBONATE INCANDESCENT PED SIGNAL W/LED LENS	4.00	EACH				
180	T-33001-L FURNISH POLYCARBONATE PEDESTRIAN SIGNAL (16 X 16) W/LED COUNT LENS (SPECIFICATION A-L)	2.00	EACH				

NEW YORK CITY DEPARTMENT OF DESIGN AND CONSTRUCTION
DIVISION OF INFRASTRUCTURE - BUREAU OF DESIGN

PROJECT ID: QED1014
CONTRACT PIN: 8502016WM0005C

BID SCHEDULE FORM

COL. 1 SEQ. NO	COL. 2 ITEM NUMBER and DESCRIPTION	COL. 3 ENGINEER'S ESTIMATE OF QUANTITIY	COL. 4 UNIT	COL. 5 UNIT PRICE (IN FIGURES) DOLLARS	CTS	COL. 6 EXTENDED AMOUNT (IN FIGURES) DOLLARS	CTS
181	T-4.22 INSTALL ANY TYPE OF ADVANCED SOLID STATE TRAFFIC SIGNAL CONTROLLER AND CABINET ON METAL POLE	1.00	EACH				
182	T-4.8 REMOVE ONE CONTROL BOX AND CONTROLLER FROM ANY POST OR SUPPORT	1.00	EACH				
183	T-5.1 FURNISH AND INSTALL 2" RIGID UNDERGROUND CONDUIT IN UNPAVED ROADWAY	50.00	L.F.				
184	T-5.2 FURNISH AND INSTALL 2" RIGID UNDERGROUND CONDUIT IN PAVED ROADWAY	200.00	L.F.				
185	T-5.32 RESTORING PERMANENT ROADWAY (INCLUDING SAWCUT)	200.00	L.F.				
186	T-5.7 FURNISH AND INSTALL ADDITIONAL 2" RIGID UNDERGROUND CONDUIT	20.00	L.F.				

NEW YORK CITY DEPARTMENT OF DESIGN AND CONSTRUCTION
DIVISION OF INFRASTRUCTURE - BUREAU OF DESIGN

PROJECT ID: QED1014
CONTRACT PIN: 8502016WM0005C

BID SCHEDULE FORM

COL. 1 SEQ. NO	COL. 2 ITEM NUMBER and DESCRIPTION	COL. 3 ENGINEER'S ESTIMATE OF QUANTITIY	COL. 4 UNIT	COL. 5 UNIT PRICE (IN FIGURES) DOLLARS	CTS	COL. 6 EXTENDED AMOUNT (IN FIGURES) DOLLARS	CTS
187	T-6.1 INSTALL CABLE (INCLUDES OVERHEAD)	1,000.00	L.F.				
188	T-6.10 REMOVE CABLE (INCLUDES OVERHEAD)	1,400.00	L.F.				
189	T-6.2 INSTALL MULTIPLE CABLE (INCLUDES OVERHEAD)	1,400.00	L.F.				
190	T-60000B FURNISH 2 c # 10B (BREAKDOWN = 2#10 WITH 3RD WIRE FOR GROUNDING).	1,500.00	L.F.				
191	T-60040 c) 7 CONDUCTOR, 14 A.W.G.	800.00	L.F.				
192	T-60190 e) 13 CONDUCTOR, 14 A.W.G.	1,800.00	L.F.				

BID SCHEDULE FORM

COL. 1 SEQ. NO	COL. 2 ITEM NUMBER and DESCRIPTION	COL. 3 ENGINEER'S ESTIMATE OF QUANTITIY	COL. 4 UNIT	COL. 5 UNIT PRICE (IN FIGURES) DOLLARS	CTS	COL. 6 EXTENDED AMOUNT (IN FIGURES) DOLLARS	CTS
193	T-7.14 INSTALL PEDESTRIAN PUSHBUTTON AND PUSHBUTTON SIGN ON ANY POST	1.00	EACH				
194	T-7.45 REMOVE PEDESTRIAN PUSHBUTTON AND PUSHBUTTON SIGN	1.00	EACH				
195	T-8.10 RELOCATE CONCRETE PYLON WITH POST	3.00	EACH				
196	T-8.8 INSTALL CONCRETE PYLON	3.00	EACH				
197	T-8.9 REMOVE CONCRETE PYLON	3.00	EACH				
198	T-81000 FURNISH CONCRETE PYLON	3.00	EACH				

NEW YORK CITY DEPARTMENT OF DESIGN AND CONSTRUCTION
DIVISION OF INFRASTRUCTURE - BUREAU OF DESIGN

PROJECT ID: QED1014
CONTRACT PIN: 8502016WM0005C

BID SCHEDULE FORM

COL. 1 SEQ. NO	COL. 2 ITEM NUMBER and DESCRIPTION	COL. 3 ENGINEER'S ESTIMATE OF QUANTITY	COL. 4 UNIT	COL. 5 UNIT PRICE (IN FIGURES) DOLLARS	CTS	COL. 6 EXTENDED AMOUNT (IN FIGURES) DOLLARS	CTS
199	UTL-6.01.1 GAS MAIN CROSSING SEWER UP TO 24" IN DIAMETER (S6.01) **Unit price bid shall not be less than: $ 1,040.00**	4.00	EACH				
200	UTL-6.01.12 GAS MAIN CROSSING WATER MAIN 48" THRU 54" IN DIAMETER (S6.01) **Unit price bid shall not be less than: $ 810.00**	6.00	EACH				
201	UTL-6.01.8 GAS SERVICES CROSSING TRENCHES AND/OR EXCAVATIONS (S6.01) **Unit price bid shall not be less than: $ 465.00**	5.00	EACH				
202	UTL-6.02 EXTRA EXCAVATION FOR THE INSTALLATION OF CATCH BASIN SEWER DRAIN PIPES WITH GAS INTERFERENCES (S6.02) **Unit price bid shall not be less than: $ 715.00**	4.00	EACH				
203	UTL-6.03 REMOVAL OF ABANDONED GAS FACILITIES. ALL SIZES. (S6.03) **Unit price bid shall not be less than: $ 15.00**	370.00	L.F.				
204	UTL-6.03.1A REMOVAL OF ABANDONED GAS FACILITIES WITH POSSIBLE COAL TAR WRAP. ALL SIZES. (FOR CON EDISON WORK ONLY) (S6.03) **Unit price bid shall not be less than: $ 25.00**	50.00	L.F.				

NEW YORK CITY DEPARTMENT OF DESIGN AND CONSTRUCTION
DIVISION OF INFRASTRUCTURE - BUREAU OF DESIGN

PROJECT ID: QED1014
CONTRACT PIN: 8502016WM0005C

BID SCHEDULE FORM

COL. 1 SEQ. NO	COL. 2 ITEM NUMBER and DESCRIPTION	COL. 3 ENGINEER'S ESTIMATE OF QUANTITIY	COL. 4 UNIT	COL. 5 UNIT PRICE (IN FIGURES) DOLLARS	CTS	COL. 6 EXTENDED AMOUNT (IN FIGURES) DOLLARS	CTS
205	UTL-6.04 ADJUST HARDWARE TO GRADE USING SPACER RINGS/ADAPTORS. (STREET REPAVING.) (S6.04) **Unit price bid shall not be less than: $ 35.00**	5.00	EACH				
206	UTL-6.05 ADJUST HARDWARE TO GRADE BY RESETTING. (ROAD RECONSTRUCTION.) (S6.05) **Unit price bid shall not be less than: $ 65.00**	5.00	EACH				
207	UTL-6.06 SPECIAL CARE EXCAVATION AND BACKFILLING (S6.06) **Unit price bid shall not be less than: $ 180.00**	100.00	C.Y.				
208	UTL-6.07 TEST PITS FOR GAS FACILITIES (S6.07) **Unit price bid shall not be less than: $ 100.00**	40.00	C.Y.				
209	UTL-GCS-2WS GAS INTERFERENCES AND ACCOMMODATIONS **PRICE BID SHALL BE FOR THE FIXED SUM OF $ 50,000.00**	1.00	F.S.	50,000	00	50,000	00

NEW YORK CITY DEPARTMENT OF DESIGN AND CONSTRUCTION
DIVISION OF INFRASTRUCTURE - BUREAU OF DESIGN

PROJECT ID: QED1014
CONTRACT PIN: 8502016WM0005C

BID SCHEDULE FORM

COL. 1 SEQ. NO	COL. 2 ITEM NUMBER and DESCRIPTION	COL. 3 ENGINEER'S ESTIMATE OF QUANTITIY	COL. 4 UNIT	COL. 5 UNIT PRICE (IN FIGURES) DOLLARS	CTS	COL. 6 EXTENDED AMOUNT (IN FIGURES) DOLLARS	CTS
210	6.39 A MOBILIZATION BID PRICE OF MOBILIZATION SHALL NOT EXCEED 4% OF THE ABOVE SUB-TOTAL PRICE.	1.00	L.S.				

SUB-TOTAL: $ _____

TOTAL BID PRICE: $ _____

PLEASE BE SURE A LEGIBLE BID IS ENTERED FOR EACH ITEM.
THE BIDDER SHALL INSERT THE TOTAL BID PRICE IN
THE BID FORM ON PAGE C-4 OF THIS BID BOOKLET.

BID FORM
THE CITY OF NEW YORK
DEPARTMENT OF DESIGN AND CONSTRUCTION
DIVISION OF INFRASTRUCTURE

BID FOR FURNISHING ALL LABOR AND MATERIAL NECESSARY AND REQUIRED FOR:

PROJECT ID: QED1014

REHABILITATION OF EXISTING TRUNK WATER MAINS IN CRESCENT STREET FROM 34TH AVENUE TO 31ST AVENUE; 31ST AVENUE FROM CRESCENT STREET TO 41ST STREET; AND 41ST STREET FROM 31ST AVENUE TO 25TH AVENUE

INCLUDING DISTRIBUTION WATER MAIN, SEWER AND TRAFFIC SIGNAL WORK

Together With All Work Incidental Thereto
BOROUGH OF QUEENS

Name of Bidder: _____

Date of Bid Opening: _____

Bidder is: (Check one, whichever applies) Individual ( ) Partnership ( ) Corporation ( )

Place of Business of Bidder: _____

Bidder's Telephone Number: _____ Fax Number: _____

Bidder's E-Mail Address: _____

Residence of Bidder (If Individual): _____

If Bidder is a Partnership, fill in the following blanks:

Names of Partners	Residence of Partners
_____	_____
_____	_____
_____	_____

If Bidder is a Corporation, fill in the following blanks:

Organized under the laws of the State of _____

Name and Home Address of President: _____

_____

Name and Home Address of Secretary: _____

_____

Name and Home Address of Treasurer: _____

BID FORM

The above-named Bidder affirms and declares:

1. The said bidder is of lawful age and the only one interested in this bid; and no person, firm or corporation other than hereinbefore named has any interest in this bid, or in the Contract proposed to be taken.

2. By submission of this bid, each bidder and each person signing on behalf of any bidder certifies, and in the case of a joint bid each party thereto certifies as to its own organization, under penalty of perjury, that to the best of its knowledge and belief: (1) the prices in this bid have been arrived at independently without collusion, consultation, communication or agreement, for the purpose of restricting competition, as to any matter relating to such prices with any other bidder or with any competitor; (2) unless otherwise required by law, the prices quoted in this bid have not been knowingly disclosed by the bidder and will not knowingly be disclosed by the bidder prior to opening, directly or indirectly, to any other bidder or to any competitor; and (3) No attempt has been made or will be made by the bidder to induce any other person, partnership or corporation to submit or not to submit a bid for the purpose of restricting competition.

3. No councilman or other officer or employee or person whose salary is payable in whole or in part from the City Treasury is directly or indirectly interested in this bid, or in the supplies, materials, equipment, work or labor to which it relates, or in any of the profits thereof.

4. The bidder is not in arrears to the City of New York upon debt or contract or taxes, and is not a defaulter, as surety or otherwise, upon any obligation of the City of New York, and has not been declared not responsible, or disqualified, by any agency of the City of New York or State of New York, nor is there any proceeding pending relating to the responsibility or qualification of the bidder to receive public contracts except as set forth on the Affirmation included as page C-6 of this Bid Booklet.

The bidder hereby affirms that it has paid all applicable City income, excise and other taxes for all years it has conducted business activities in New York City.

5. The bidder, as an individual, or as a member, partner, director or officer of the bidder, if the same be a firm, partnership or corporation, executes this document expressly warranting and representing that should this bid be accepted by the City and the Contract awarded to him, he and his subcontractors engaged in the performance: (1) will comply with the provisions of Section 6-108 of the Administrative Code of the City of New York and the non-discrimination provisions of Section 220a of the New York State Labor Law, as more expressly and in detail set forth in the Agreement; (2) will comply with Section 6-109 of the Administrative Code of the City of New York in relation to minimum wages and other stipulations as more expressly and in detail set forth in the Agreement; (3) have complied with the provisions of the aforesaid laws since their respective effective dates, and (4) will post notices to be furnished by the City, setting forth the requirements of the aforesaid laws in prominent and conspicuous places in each and every plant, factory, building and structure where employees engaged in the performance of the Contract can readily view it, and will continue to keep such notices posted until the supplies, materials and equipment, or work labor and services required to be furnished or rendered by the Contractor have been finally accepted by the City. In the event of any breach or violation of the foregoing, the Contractor may be subject to damages, liquidated or otherwise, cancellation of the Contract and suspension as a bidder for a period of three years. (The words, "the bidder", "he", "his", and "him" where used herein shall mean the individual bidder, firm, partnership or corporation executing the bid).

6. Compliance Report

The bidder, as an individual, or as a member, partner, director, or officer of the bidder, if the same be a firm, partnership, or corporation, (1) represents that his attention has been specifically drawn to Executive Order No. 50, dated, April 25, 1980, on Equal Employment Compliance of the contract, and (2) warrants that he will comply with the provisions of Executive Order No. 50. The Employment Report must be submitted as part of the bid.

The bidder, as an individual, or as a member, partner, director, or officer of the bidder, if the same be a firm, partnership, or corporation, executes this document expressly warranting that he will comply with: (1) the provision of the contract on providing records, Chapter 8.

7. By submission of this bid, the bidder certifies that it now has and will continue to have the financial capability to fully perform the work required for this contract. Any award of this contract will be made in reliance upon such certification. Upon request therefor, the bidder will submit written verification of such financial capability in a form that is acceptable to the department.

8. In accordance with Section 165 of the State Finance Law, the bidder agrees that tropical hardwoods, as defined in Section 165 of the State Finance Law, shall not be utilized in the performance of this Contract, except as the same are permitted by the foregoing provision of law.

9. The bidder has visited and examined the site of the work and has carefully examined the Contract in the form approved by the Corporation Counsel, and will execute the Contract and perform all its items, covenants and conditions, and will provide, furnish and deliver all the work, materials, supplies, tools and appliances for all labor and materials necessary or required for the hereinafter named work, all in strict conformity with the Contract, for the prices set forth in the Bid Schedule:

10. M/WBE UTILIZATION PLAN: By signing its bid, the bidder agrees to the Vendor Certification and Required Affirmations set forth below, unless a full waiver of the Participation Goals is granted. The Vendor Certification and Required Affirmations will be deemed to satisfy the requirement to complete Section V of Part II of Schedule B: M/WBE Utilization Plan.

Section V: Vendor Certification and Required Affirmations:

I hereby:

1) acknowledge my understanding of the M/WBE participation requirements as set forth in this Contract and the pertinent provisions of Section 6-129 of the Administrative Code of the City of New York and the rules promulgated thereunder;
2) affirm that the information supplied in support of the M/WBE Utilization Plan is true and correct;
3) agree, if awarded this Contract, to comply with the M/WBE participation requirements of this Contract, the pertinent provisions of Section 6-129, and the rules promulgated thereunder, all of which shall be deemed to be material terms of this Contract;
4) agree and affirm that it is a material term of this Contract that the Vendor will award the total dollar value of the M/WBE Participation Goals to certified MBEs and/or WBEs, unless a full waiver is obtained or such goals are modified by the Agency; and
5) agree and affirm, if awarded this Contract, to make all reasonable, good faith efforts to meet the M/WBE Participation Goals, or If a partial waiver is obtained or such goals are modified by the Agency, to meet the modified Participation Goals by soliciting and obtaining the participation of certified MBE and/or WBE firms.

(NO TEXT ON THIS PAGE)

BID FORM

PROJECT ID: QED1014

TOTAL BID PRICE: In the space provided below, the Bidder shall indicate its Total Bid Price in figures. Such Total Bid Price is set forth on the final page of the Bid Schedule.

TOTAL BID PRICE: $ _____
(a/k/a BID PROPOSAL)

BIDDER'S SIGNATURE AND AFFIDAVIT

Bidder: _____

By: _____
(Signature of Partner or corporate officer)

_____

Attest: Secretary of Corporate Bidder
(Corporate Seal)

Affidavit on the following page should be subscribed
and sworn to before a Notary Public

BID FORM (TO BE NOTARIZED)

AFFIDAVIT WHERE BIDDER IS AN INDIVIDUAL

STATE OF NEW YORK, COUNTY OF _____ ss:

_____ being duly sworn says:

I am the person described in and who executed the foregoing bid, and the several matters therein stated are in all respects true.

_____
(Signature of the person who signed the Bid)

Subscribed and sworn to before me this
_____ day of _____, _____

_____
Notary Public

AFFIDAVIT WHERE BIDDER IS A PARTNERSHIP

STATE OF NEW YORK, COUNTY OF _____ ss:

_____ being duly sworn says:

I am a member of _____ the firm described in and which executed the foregoing bid. I subscribed the name of the firm thereto on behalf of the firm, and the several matters therein stated are in all respects true.

_____
(Signature of Partner who signed the Bid)

Subscribed and sworn to before me this
_____ day of _____, _____

_____
Notary Public

AFFIDAVIT WHERE BIDDER IS A CORPORATION

STATE OF NEW YORK, COUNTY OF _____ ss:

_____ being duly sworn says:

I am the _____ of the above named corporation whose name is subscribed to and which executed the foregoing bid. I reside at _____

I have knowledge of the several matters therein stated, and they are in all respects true.

_____
(Signature of Partner who signed the Bid)

Subscribed and sworn to before me this
_____ day of _____, _____

_____
Notary Public

AFFIRMATION

PROJECT ID: QED1014

The undersigned bidder affirms and declares that said bidder is not in arrears to the City of New York upon debt, contract or taxes and is not a defaulter, as surety or otherwise, upon obligation to the City of New York, and has not been declared not responsible, or disqualified, by any agency of the City of New York, nor is there any proceeding pending relating to the responsibility or qualification of the bidder to receive public contracts except:

_____

_____

(If none, the bidder shall insert the word "None" in the space provided above.)

Full Name of Bidder: _____

Address: _____

City _____ State _____ Zip Code _____

CHECK ONE BOX AND INCLUDE APPROPRIATE NUMBER:

/__/ A - Individual or Sole Proprietorship*
SOCIAL SECURITY NUMBER

- - - - - - - - - - - -

/__/ B - Partnership, Joint Venture or other unincorporated organization
EMPLOYER IDENTIFICATION NUMBER

- - - - - - - - - - - -

/__/ C- Corporation
EMPLOYER IDENTIFICATION NUMBER

- - - - - - - - - - - -

By:_____
Signature

Title:_____

If a corporation, place seal here

This affirmation must be signed by an officer or duly authorized representative.

*Under the Federal Privacy Act the furnishing of Social Security Numbers by bidders on City contracts is voluntary. Failure to provide a Social Security Number will not result in a bidder's disqualification. Social Security Numbers will be used to identify bidders, proposers or vendors to ensure their compliance with laws, to assist the City in enforcement of laws, as well as to provide the City a means of identifying of businesses which seek City contracts.

(NO TEXT ON THIS PAGE)

BID BOND 1
FORM OF BID BOND

KNOW ALL MEN BY THESE PRESENTS. That we,_____

_____

_____

hereinafter referred to as the "Principal", and _____

_____

_____

_____

hereinafter referred to as the "Surety" are held and firmly bound to THE CITY OF NEW YORK, hereinafter referred to as the "CITY", or to its successors and assigns in the penal sum of _____

_____

($_____), Dollars lawful money of the United States, for the payment of which said sum of money well and truly to be made, we, and each of us, bind ourselves, our heirs, executors, administrators, successors and assigns, jointly and severally, firmly by these presents.

Whereas, the Principal is about to submit (or has submitted) to the City the accompanying proposal, hereby made a part hereof, to enter into a contract in writing for _____

_____

_____

NOW, THEREFORE, the conditions of this obligation are such that if the Principal shall not withdraw said Proposal without the consent of the City for a period of forty-five (45) days after the opening of bids and in the event of acceptance of the Principal's Proposal by the City, if the Principal shall:

(a) Within ten (10) days after notification by the City, execute in quadruplicate and deliver to the City all the executed counterparts of the Contract in the form set forth in the Contract Documents, in accordance with the proposal as accepted, and

(b) Furnish a performance bond and separate payment bond, as may be required by the City, for the faithful performance and proper fulfillment of such Contract, which bonds shall be satisfactory in all respects to the City and shall be executed by good and sufficient sureties, and

(c) In all respects perform the agreement created by the acceptance of said Proposal as provided in the Information for Bidders, bound herewith and made a part hereof, or if the City shall reject the aforesaid Proposal, then this obligation shall be null and void; otherwise to remain in full force and effect.

BID BOND 2

In the event that the Proposal of the Principal shall be accepted and the Contract be awarded to him the Surety hereunder agrees subject only to the payment by the Principal of the premium therefore, if requested by the City, to write the aforementioned performance and payment bonds in the form set forth in the Contract Documents.

It is expressly understood and agreed that the liability of the Surety for any and all claims hereunder shall in no event exceed the penal amount of this obligation as herein stated.

There shall be no liability under this bond if, in the event of the acceptance of the Principal's Proposal by the City, either a performance bond or payment bond, or both, shall not be required by the City on or before the 30th day after the date on which the City signs the Contract.

The surety, for the value received, hereby stipulates and agrees that the obligations of the Surety and its bond shall in no way be impaired or affected by any postponements of the date upon which the City will receive or open bids, or by any extensions of the time within which the City may accept the Principal's Proposal, or by any waiver by the City of any of the requirements of the Information for Bidders, and the Surety hereby waives notice of any such postponements, extensions, or waivers.

IN WITNESS WHEREOF, the Principal and the Surety have hereunto set their hands and seals and such of them as are corporations have caused their corporate seals to be hereto affixed and these presents to be signed by their proper officers the _____ day of _____, _____.

(Seal) _____(L.S.)
Principal

By: _____

(Seal) _____
Surety

By: _____

BID BOND 3

ACKNOWLEDGMENT OF PRINCIPAL, IF A CORPORATION

State of _____ County of _____ ss:
On this _____ day of _____, _____, before me personally came _____ to me known, who, being by me duly sworn, did depose and say that he resides at _____
that he is the _____ of _____
the corporation described in and which executed the foregoing instrument; that he knows the seal of said corporation; that one of the seals affixed to said instrument is such seal; that it was so affixed by order of the directors of said corporation, and that he signed his name thereto by like order.

_____
Notary Public

ACKNOWLEDGMENT OF PRINCIPAL, IF A PARTNERSHIP

State of _____ County of _____ ss:
On this _____ day of _____, _____, before me personally appeared _____ to me known and known to me to be one of the members of the firm of _____ described in and who executed the foregoing instrument, and he acknowledged to me that he executed the same as and for the act and deed of said firm.

_____
Notary Public

ACKNOWLEDGMENT OF PRINCIPAL, IF AN INDIVIDUAL

State of _____ County of _____ ss:
On this _____ day of _____, _____, before me personally appeared _____ to me known and known to me to be the person described in and who executed the foregoing instrument and acknowledged that he executed the same.

_____
Notary Public

AFFIX ACKNOWLEDGMENTS AND JUSTIFICATION OF SURETIES

(NO TEXT ON THIS PAGE)

M/WBE PROGRAM

M/WBE UTILIZATION PLAN

M/WBE Program Requirements: The requirements for the M/WBE Program are set forth on the following pages of this Bid Booklet, in the section entitled "Notice to All Prospective Contractors".

Schedule B: M/WBE Utilization Plan: Schedule B: M/WBE Utilization Plan for this Contract is set forth in this Bid Booklet on the pages following the section entitled "Notice to All Prospective Contractors". The M/WBE Utilization Plan (Part I) indicates whether Participation Goals have been established for this Contract. If Participation Goals have been established for this Contract, the bidder must submit an M/WBE Utilization Plan (Part II) with its bid.

Waiver: The bidder may seek a full or partial pre-award waiver of the Participation Goals in accordance with the "Notice to All Prospective Contractors" (See Part A, Section 10). The bidder's request for a waiver must be submitted at least seven (7) calendar days prior to the bid date. Waiver requests submitted after the deadline will not be considered. The form for requesting a waiver of the Participation Goals is set forth in the M/WBE Utilization Plan (Part III).

Rejection of the Bid: The bidder must complete Schedule B: M/WBE Utilization Plan (Part II) set forth in this Bid Booklet on the pages following the section entitled "Notice to All Prospective Contractors". A Schedule B submitted by the bidder which does not include the Vendor Certification and Required Affirmations (See Section V of Part II) will be deemed to be non-responsive, unless a full waiver of the Participation Goals is granted (Schedule B, Part III). In the event that the City determines that the bidder has submitted a Schedule B where the Vendor Certification and Required Affirmations are completed but other aspects of the Schedule B are not complete, or contain a copy or computation error that is at odds with the Vendor Certification and Required Affirmations, the bidder will be notified by the Agency and will be given four (4) calendar days from receipt of notification to cure the specified deficiencies and return a completed Schedule B to the Agency. Failure to do so will result in a determination that the Bid is non-responsive. Receipt of notification is defined as the date notice is emailed or faxed (if the bidder has provided an email address or fax number), or no later than five (5) calendar days from the date of mailing or upon delivery, if delivered.

Impact on LBE Requirements: If Participation Goals have been established for the participation of M/WBEs, the contractor is not required to comply with the Locally Based Enterprise Program ("LBE"). The LBE Program is set forth in Article 67 of the Contract.

NOTICE TO ALL PROSPECTIVE CONTRACTORS

PARTICIPATION BY MINORITY-OWNED AND WOMEN-OWNED BUSINESS ENTERPRISES IN CITY PROCUREMENT

ARTICLE I. M/WBE PROGRAM

Local Law No. 129 of 2005 added and Local Law 1 of 2013 amended Section 6-129 of the Administrative Code of the City of New York (hereinafter "Section 6-129"). Section 6-129 establishes the program for participation in City procurement ("M/WBE Program") by minority- owned business enterprises ("MBEs") and women-owned business enterprises ("WBEs"), certified in accordance with Section 1304 of the New York City Charter. As stated in Section 6-129, the intent of the program is to address the impact of discrimination on the City's procurement process, and to promote the public interest in avoiding fraud and favoritism in the procurement process, increasing competition for City business, and lowering contract costs. The contract provisions contained herein are pursuant to Section 6-129, and the rules of the Department of Small Business Services ("DSBS") promulgated thereunder.

If this Contract is subject to the M/WBE Program established by Section 6-129, the specific requirements of MBE and/or WBE participation for this Contract are set forth in Schedule B of the Contract (entitled the "M/WBE Utilization Plan"), and are detailed below. The Contractor must comply with all applicable MBE and WBE requirements for this Contract.

All provisions of Section 6-129 are hereby incorporated in the Contract by reference and all terms used herein that are not defined herein shall have the meanings given such terms in Section 6-129. Article I, Part A, below, sets forth provisions related to the participation goals for construction, standard and professional services contracts. Article I, Part B, below, sets forth miscellaneous provisions related to the M/WBE Program.

PART A

PARTICIPATION GOALS FOR CONSTRUCTION, STANDARD AND PROFESSIONAL SERVICES CONTRACTS OR TASK ORDERS

1. The **MBE and/or WBE Participation Goals** established for this Contract or Task Orders issued pursuant to this Contract, ("**Participation Goals**"), as applicable, are set forth on Schedule B, Part I to this Contract (see Page 1, line 1 Total Participation Goals) or will be set forth on Schedule B, Part I to Task Orders issued pursuant to this Contract, as applicable.

The **Participation Goals** represent a percentage of the total dollar value of the Contract or Task Order, as applicable, that may be achieved by awarding subcontracts to firms certified with New York City Department of Small Business Services as MBEs and/or WBEs, and/or by crediting the participation of prime contractors and/or qualified joint ventures as provided in Section 3 below, unless the goals have been waived or modified by Agency in accordance with Section 6-129 and Part A, Sections 10 and 11 below, respectively.

2. If **Participation Goals** have been established for this Contract or Task Orders issued pursuant to this Contract, Contractor agrees or shall agree as a material term of the Contract that Contractor shall be subject to the **Participation Goals**, unless the goals are waived or modified by Agency in accordance with Section 6-129 and Part A, Sections 10 and 11 below, respectively.

3. If **Participation Goals** have been established for this Contract or Task Order issued pursuant to this Contract, a Contractor that is an MBE and/or WBE shall be permitted to count its own participation toward fulfillment of the relevant **Participation Goal**, provided that in accordance with Section 6-129 the value of Contractor's participation shall be determined by subtracting from the total value of the Contract or Task Order, as applicable, any amounts that the Contractor pays to direct subcontractors (as defined in Section 6-129(c)(13)), and provided further that a Contractor that is certified as both an MBE and a WBE may count its own participation either toward the goal for MBEs or the goal for WBEs, but not both.

A Contractor that is a qualified joint venture (as defined in Section 6-129(c)(30)) shall be permitted to count a percentage of its own participation toward fulfillment of the relevant **Participation Goal**. In accordance with Section 6-129, the value of Contractor's participation shall be determined by subtracting from the total value of the Contract or Task Order, as applicable, any amounts that Contractor pays to direct subcontractors, and then multiplying the remainder by the percentage to be applied to total profit to determine the amount to which an MBE or WBE is entitled pursuant to the joint venture agreement, provided that where a participant in a joint venture is certified as both an MBE and a WBE, such amount shall be counted either toward the goal for MBEs or the goal for WBEs, but not both.

4. A. If **Participation Goals** have been established for this Contract, a prospective contractor shall be required to submit with its bid or proposal, as applicable, a completed Schedule B, M/WBE Utilization Plan, Part II (see Pages 2-4) indicating: (a) whether the contractor is an MBE or WBE, or qualified joint venture; (b) the percentage of work it intends to award to direct subcontractors; and (c) in cases where the contractor intends to award direct subcontracts, a description of the type and dollar value of work designated for participation by MBEs and/or WBEs, and the time frames in which such work is scheduled to begin and end. In the event that this M/WBE Utilization Plan indicates that the bidder or proposer, as applicable, does not intend to meet the **Participation Goals**, the bid or proposal, as applicable, shall be deemed non-responsive, unless Agency has granted the bidder or proposer, as applicable, a pre- award waiver of the Participation Goals in accordance with Section 6-129 and Part A, Section 10 below.

B. (i) If this Contract is for a master services agreement or other requirements type contract that will result in the issuance of Task Orders that will be individually registered ("Master Services Agreement") and is subject to M/WBE **Participation Goals**, a prospective contractor shall be required to submit with its bid or proposal, as applicable, a completed Schedule B, M/WBE Participation Requirements for Master Services Agreements That Will Require Individually Registered Task Orders, Part II (page 2) indicating the prospective contractor's certification and required affirmations to make all reasonable good faith efforts to meet participation goals established on each individual Task Order issued pursuant to this Contract, or if a partial waiver is obtained or such goals are modified by the Agency, to meet the modified **Participation Goals** by soliciting and obtaining the participation of certified MBE and/or WBE firms. In the event that the Schedule B indicates that the bidder or proposer, as applicable, does not intend to meet the **Participation Goals** that may be established on Task Orders issued pursuant to this Contract, the bid or proposal, as applicable, shall be deemed nonresponsive.

(ii) **Participation Goals** on a Master Services Agreement will be established for individual Task Orders issued after the Master Services Agreement is awarded. If **Participation Goals** have been established on a Task Order, a contractor shall be required to submit a Schedule B – M/WBE Utilization Plan For Independently Registered Task Orders That Are Issued Pursuant to Master Services Agreements, Part II (see Pages 2-4) indicating: (a) whether the contractor is an MBE or WBE, or qualified joint venture; (b) the percentage of work it intends to award to direct subcontractors; and (c) in cases where the contractor intends to award direct subcontracts, a description of the type and dollar value of work designated for participation by MBEs and/or WBEs, and the time frames in which such work is scheduled to begin and end. The contractor must engage in good faith efforts to meet the **Participation Goals** as established for the Task Order unless Agency has granted the contractor a pre-award waiver of the Participation Goals in accordance with Section 6-129 and Part A, Section 10 below.

C. THE BIDDER/PROPOSER MUST COMPLETE THE SCHEDULE B INCLUDED HEREIN (SCHEDULE B, PART II). A SCHEDULE B SUBMITTED BY THE BIDDER/PROPOSER WHICH DOES NOT INCLUDE THE VENDOR CERTIFICATION AND REQUIRED AFFIRMATIONS (SEE SECTION V OF PART II) WILL BE DEEMED TO BE NON-RESPONSIVE, UNLESS A FULL WAIVER OF THE PARTICIPATION GOALS IS GRANTED (SCHEDULE B, PART III). IN THE EVENT THAT THE CITY DETERMINES THAT THE BIDDER/PROPOSER HAS SUBMITTED A SCHEDULE B WHERE THE VENDOR CERTIFICATION AND REQUIRED AFFIRMATIONS ARE COMPLETED BUT OTHER ASPECTS OF THE SCHEDULE B ARE NOT COMPLETE, OR CONTAIN A COPY OR COMPUTATION ERROR THAT IS AT ODDS WITH THE VENDOR CERTIFICATION AND AFFIRMATIONS, THE BIDDER/PROPOSER WILL BE NOTIFIED BY THE AGENCY AND WILL BE GIVEN FOUR (4) CALENDAR DAYS FROM RECEIPT OF NOTIFICATION TO CURE THE SPECIFIED DEFICIENCIES AND RETURN A COMPLETED SCHEDULE B TO THE AGENCY. FAILURE TO DO _

SO WILL RESULT IN A DETERMINATION THAT THE BID/PROPOSAL IS NON-RESPONSIVE. RECEIPT OF NOTIFICATION IS DEFINED AS THE DATE NOTICE IS E-MAILED OR FAXED (IF THE BIDDER/PROPOSER HAS PROVIDED AN E-MAIL ADDRESS OR FAX NUMBER), OR NO LATER THAN FIVE (5) CALENDAR DAYS FROM THE DATE OF MAILING OR UPON DELIVERY, IF DELIVERED.

5. Where an **M/WBE** Utilization Plan has been submitted, the Contractor shall, within 30 days of issuance by Agency of a notice to proceed, submit a list of proposed persons or entities to which it intends to award subcontracts within the subsequent 12 months. In the case of multiyear contracts, such list shall also be submitted every year thereafter. The Agency may also require the Contractor to report periodically about the contracts awarded by its direct subcontractors to indirect subcontractors (as defined in Section 6-129(c)(22)). **PLEASE NOTE: If this Contract is a public works project subject to GML §101(5) (i.e., a contract valued at or below $3M for projects in New York City) or if the Contract is subject to a project labor agreement in accordance with Labor Law §222, and the bidder is required to identify at the time of bid submission its intended subcontractors for the Wicks trades (plumbing and gas fitting; steam heating, hot water heating, ventilating and air conditioning (HVAC); and electric wiring), the Contractor must identify all those to which it intends to award construction subcontracts for any portion of the Wicks trade work at the time of bid submission, regardless of what point in the life of the contract such subcontracts will occur. In identifying intended subcontractors in the bid submission, bidders may satisfy any Participation Goals established for this Contract by proposing one or more subcontractors that are MBEs and/or WBEs for any portion of the Wicks trade work.** In the event that the Contractor's selection of a subcontractor is disapproved, the Contractor shall have a reasonable time to propose alternate subcontractors.

6. MBE and WBE firms must be certified by DSBS in order for the Contractor to credit such firms' participation toward the attainment of the **Participation Goals**. Such certification must occur prior to the firms' commencement of work. A list of MBE and WBE firms may be obtained from the DSBS website at www.nyc.gov/buycertified, by emailing DSBS at buyer@sbs.nyc.gov, by calling (212) 513-6356, or by visiting or writing DSBS at 110 William St., New York, New York, 10038, 7th floor. Eligible firms that have not yet been certified may contact DSBS in order to seek certification by visiting www.nyc.gov/getcertified, emailing MWBE@sbs.nyc.gov, or calling the DSBS certification helpline at (212) 513-6311. A firm that is certified as both an MBE and a WBE may be counted either toward the goal for MBEs or the goal for WBEs, but not both. No credit shall be given for participation by a graduate MBE or graduate WBE, as defined in Section 6-129(c)(20).

7. Where an **M/WBE** Utilization Plan has been submitted, the Contractor shall, with each voucher for payment, and/or periodically as Agency may require, submit statements, certified under penalty of perjury, which shall include, but not be limited to,: the total amount the Contractor paid to its direct subcontractors, and, where applicable pursuant to Section 6-129(j), the total amount direct subcontractors paid to indirect subcontractors; the names, addresses and contact numbers of each MBE or WBE hired as a subcontractor by the Contractor, and, where applicable, hired by any of the Contractor's direct subcontractors; and the dates and amounts paid to each MBE or WBE. The Contractor shall also submit, along with its voucher for final payment: the total amount it paid to subcontractors, and, where applicable pursuant to Section 6-129(j), the total amount its direct subcontractors paid directly to their indirect subcontractors; and a final list, certified under penalty of perjury, which shall include the name, address and contact information of each subcontractor that is an MBE or WBE, the work performed by, and the dates and amounts paid to each.

8. If payments made to, or work performed by, MBEs or WBEs are less than the amount specified in the Contractor's **M/WBE** Utilization Plan, Agency shall take appropriate action, in accordance with Section 6-129 and Article II below, unless the Contractor has obtained a modification of its **M/WBE** Utilization Plan in accordance with Section 6-129 and Part A, Section 11 below.

9. Where an **M/WBE** Utilization Plan has been submitted, and the Contractor requests a change order the value of which exceeds the greater of 10 percent of the Contract or Task Order, as applicable, or $500,000, Agency shall review the scope of work for the Contract or Task Order, as applicable, and the scale and types of work involved in the change order, and determine whether the **Participation Goals** should be modified.

10. Pre-award waiver of the **Participation Goals**. (a) A bidder or proposer, or contractor with respect to a Task Order, may seek a pre-award full or partial waiver of the **Participation Goals** in accordance with Section 6-129, which requests that Agency change one or more **Participation Goals** on the grounds that the **Participation Goals** are unreasonable in light of the availability of certified firms to perform the services required, or by demonstrating that it has legitimate business reasons for proposing a lower level of subcontracting in its M/WBE Utilization Plan.

(b) To apply for a full or partial waiver of the **Participation Goals**, a bidder, proposer, or contractor, as applicable, must complete Part III (Page 5) of Schedule B and submit such request no later than seven (7) calendar days prior to the date and time the bids, proposals, or Task Orders are due, in writing to the Agency by email at poped@ddc.nyc.gov or via facsimile at (718) 391-1886. Bidders, proposers, or contractors, as applicable, who have submitted requests will receive an Agency response by no later than two (2) calendar days prior to the due date for bids, proposals, or Task Orders; provided, however, that if that date would fall on a weekend or holiday, an Agency response will be provided by close-of-business on the business day before such weekend or holiday date.

(c) If the Agency determines that the **Participation Goals** are unreasonable in light of the availability of certified firms to perform the services required, it shall revise the solicitation and extend the deadline for bids and proposals, or revise the Task Order, as applicable.

(d) Agency may grant a full or partial waiver of the **Participation Goals** to a bidder, proposer or contractor, as applicable, who demonstrates—before submission of the bid, proposal or Task Order, as applicable—that it has legitimate business reasons for proposing the level of subcontracting in its **M/WBE** Utilization Plan. In making its determination, Agency shall consider factors that shall include, but not be limited to, whether the bidder, proposer or contractor, as applicable, has the capacity and the bona fide intention to perform the Contract without any subcontracting, or to perform the Contract without awarding the amount of subcontracts represented by the **Participation Goals**. In making such determination, Agency may consider whether the **M/WBE** Utilization Plan is consistent with past subcontracting practices of the bidder, proposer or contractor, as applicable, whether the bidder, proposer or contractor, as applicable, has made efforts to form a joint venture with a certified firm, and whether the bidder, proposer, or contractor, as applicable, has made good faith efforts to identify other portions of the Contract that it intends to subcontract.

11. Modification of **M/WBE** Utilization Plan. (a) A Contractor may request a modification of its **M/WBE** Utilization Plan after award of this Contract. **PLEASE NOTE: If this Contract is a public works project subject to GML §101(5) (i.e., a contract valued at or below $3M for projects in New York City) or if the Contract is subject to a project labor agreement in accordance with Labor Law §222, and the bidder is required to identify at the time of bid submission its intended subcontractors for the Wicks trades (plumbing and gas fitting; steam heating, hot water heating, ventilating and air conditioning (HVAC); and electric wiring), the Contractor may request a Modification of its M/WBE Utilization Plan as part of its bid submission**. The Agency may grant a request for Modification of a Contractor's **M/WBE** Utilization Plan if it determines that the Contractor has established, with appropriate documentary and other evidence, that it made reasonable, good faith efforts to meet the **Participation Goals.** In making such determination, Agency shall consider evidence of the following efforts, as applicable, along with any other relevant factors:

(i) The Contractor advertised opportunities to participate in the Contract, where appropriate, in general circulation media, trade and professional association publications and small business media, and publications of minority and women's business organizations;
(ii) The Contractor provided notice of specific opportunities to participate in the Contract, in a timely manner, to minority and women's business organizations;
(iii) The Contractor sent written notices, by certified mail or facsimile, in a timely manner, to advise MBEs or WBEs that their interest in the Contract was solicited;
(iv) The Contractor made efforts to identify portions of the work that could be substituted for portions originally designated for participation by MBEs and/or WBEs in the M/WBE Utilization Plan, and for which the Contractor claims an inability to retain MBEs or WBEs;

(v) The Contractor held meetings with MBEs and/or WBEs prior to the date their bids or proposals were due, for the purpose of explaining in detail the scope and requirements of the work for which their bids or proposals were solicited;

(vi) The Contractor made efforts to negotiate with MBEs and/or WBEs as relevant to perform specific subcontracts, or act as suppliers or service providers;

(vii) Timely written requests for assistance made by the Contractor to Agency's M/WBE liaison officer and to DSBS;

(viii) Description of how recommendations made by DSBS and Agency were acted upon and an explanation of why action upon such recommendations did not lead to the desired level of participation of MBEs and/or WBEs.

Agency's M/WBE officer shall provide written notice to the Contractor of the determination.

(b) The Agency may modify the **Participation Goals** when the scope of the work has been changed by the Agency in a manner that affects the scale and types of work that the Contractor indicated in its **M/WBE** Utilization Plan would be awarded to subcontractors.

12. If this Contract is for an indefinite quantity of construction, standard or professional services or is a requirements type contract and the Contractor has submitted an **M/WBE** Utilization Plan and has committed to subcontract work to MBEs and/or WBEs in order to meet the **Participation Goals**, the Contractor will not be deemed in violation of the M/WBE Program requirements for this Contract with regard to any work which was intended to be subcontracted to an MBE and/or WBE to the extent that the Agency has determined that such work is not needed.

13. If **Participation Goals** have been established for this Contract or a Task Order issued pursuant to this Contract, at least once annually during the term of the Contract or Task Order, as applicable, Agency shall review the Contractor's progress toward attainment of its M/WBE Utilization Plan, including but not limited to, by reviewing the percentage of work the Contractor has actually awarded to MBE and/or WBE subcontractors and the payments the Contractor made to such subcontractors.

14. If **Participation Goals** have been established for this Contract or a Task Order issued pursuant to this Contract, Agency shall evaluate and assess the Contractor's performance in meeting those goals, and such evaluation and assessment shall become part of the Contractor's overall contract performance evaluation.

PART B: MISCELLANEOUS

1. The Contractor shall take notice that, if this solicitation requires the establishment of an **M/WBE** Utilization Plan, the resulting contract may be audited by DSBS to determine compliance with Section 6-129. See §6-129(e)(10). Furthermore, such resulting contract may also be examined by the City's Comptroller to assess compliance with the **M/WBE** Utilization Plan.

2. Pursuant to DSBS rules, construction contracts that include a requirement for an **M/WBE** Utilization Plan shall not be subject to the law governing Locally Based Enterprises set forth in Section 6-108.1 of the Administrative Code of the City of New York.

3. DSBS is available to assist contractors and potential contractors in determining the availability of MBEs and/or WBEs to participate as subcontractors, and in identifying opportunities that are appropriate for participation by MBEs and/or WBEs in contracts.

4. Prospective contractors are encouraged to enter into qualified joint venture agreements with MBEs and/or WBEs as defined by Section 6-129(c)(30).

5. By submitting a bid or proposal the Contractor hereby acknowledges its understanding of the M/WBE Program requirements set forth herein and the pertinent provisions of Section 6-129, and any rules promulgated thereunder, and if awarded this Contract, the Contractor hereby agrees to comply with the M/WBE Program requirements of this Contract and pertinent provisions of Section 6-129, and any rules promulgated thereunder, all of which shall be deemed to be material terms of this Contract. The Contractor hereby agrees to make all reasonable, good faith efforts to solicit and obtain the participation of MBEs and/or WBEs to meet the required **Participation Goals**.

ARTICLE II. ENFORCEMENT

1. If Agency determines that a bidder or proposer, as applicable, has, in relation to this procurement, violated Section 6-129 or the DSBS rules promulgated pursuant to Section 6-129, Agency may disqualify such bidder or proposer, as applicable, from competing for this Contract and the Agency may revoke such bidder's or proposer's prequalification status, if applicable.

2. Whenever Agency believes that the Contractor or a subcontractor is not in compliance with Section 6-129 or the DSBS rules promulgated pursuant to Section 6-129, or any provision of this Contract that implements Section 6-129, including, but not limited to any **M/WBE** Utilization Plan, Agency shall send a written notice to the Contractor describing the alleged noncompliance and offering the Contractor an opportunity to be heard. Agency shall then conduct an investigation to determine whether such Contractor or subcontractor is in compliance.

3. In the event that the Contractor has been found to have violated Section 6-129, the DSBS rules promulgated pursuant to Section 6-129, or any provision of this Contract that implements Section 6-129, including, but not limited to, any **M/WBE** Utilization Plan, Agency may determine that one of the following actions should be taken:

(a) entering into an agreement with the Contractor allowing the Contractor to cure the violation;
(b) revoking the Contractor's pre-qualification to bid or make proposals for future contracts;
(c) making a finding that the Contractor is in default of the Contract;
(d) terminating the Contract;
(e) declaring the Contractor to be in breach of Contract;
(f) withholding payment or reimbursement;
(g) determining not to renew the Contract;
(h) assessing actual and consequential damages;
(i) assessing liquidated damages or reducing fees, provided that liquidated damages may be based on amounts representing costs of delays in carrying out the purposes of the M/WBE Program, or in meeting the purposes of the Contract, the costs of meeting utilization goals through additional procurements, the administrative costs of investigation and enforcement, or other factors set forth in the Contract;
(j) exercising rights under the Contract to procure goods, services or construction from another contractor and charge the cost of such contract to the Contractor that has been found to be in noncompliance; or
(k) taking any other appropriate remedy.

4. If an **M/WBE** Utilization Plan has been submitted, and pursuant to this Article II, Section 3, the Contractor has been found to have failed to fulfill its **Participation Goals** contained in its **M/WBE** Utilization Plan or the **Participation Goals** as modified by Agency pursuant to Article I, Part A, Section 11, Agency may assess liquidated damages in the amount of ten percent (10%) of the difference between the dollar amount of work required to be awarded to MBE and/or WBE firms to meet the **Participation Goals** and the dollar amount the Contractor actually awarded and paid, and/or credited, to MBE and/or WBE firms. In view of the difficulty of accurately ascertaining the loss which the City will suffer by reason of Contractor's failure to meet the **Participation Goals**, the foregoing amount is hereby fixed and agreed as the liquidated damages that the City will suffer by reason of such failure, and not as a penalty. Agency may deduct and retain out of any monies which may become due under this Contract the amount of any such liquidated damages; and in case the amount which may become due under this Contract shall be less than the amount of liquidated damages suffered by the City, the Contractor shall be liable to pay the difference.

5. Whenever Agency has reason to believe that an MBE and/or WBE is not qualified for certification, or is participating in a contract in a manner that does not serve a commercially useful function (as defined in Section 6-129(c)(8)), or has violated any provision of Section 6- 129, Agency shall notify the Commissioner of DSBS who shall determine whether the certification of such business enterprise should be revoked.

6. Statements made in any instrument submitted to Agency pursuant to Section 6-129 shall be submitted under penalty of perjury and any false or misleading statement or omission shall be grounds for the application of any applicable criminal and/or civil penalties for perjury. The making of a false or fraudulent statement by an MBE and/or WBE in any instrument submitted pursuant to Section 6-129 shall, in addition, be grounds for revocation of its certification.

7. The Contractor's record in implementing its **M/WBE** Utilization Plan shall be a factor in the evaluation of its performance. Whenever Agency determines that a Contractor's compliance with an **M/WBE** Utilization Plan has been unsatisfactory, Agency shall, after consultation with the City Chief Procurement Officer, file an advice of caution form for inclusion in VENDEX as caution data.

Tax ID #: _____

APT E-PIN #: 85016B0110

SCHEDULE B – M/WBE Utilization Plan
Part I: M/WBE Participation Goals

Part I to be completed by contracting agency

Contract Overview

APT E- Pin #	85016B0110	**FMS Project ID#:**	QED-1014
Project Title/ Agency PIN #	REHABILITATION OF EXISTING TRUNK WATER MAINS / 8502016WM0005C		
Bid/Proposal Response Date	April 15, 2016		
Contracting Agency	Department of Design and Construction		
Agency Address	30-30 Thomson Avenue **City** Long Island City **State** NY **Zip Code** 11101		
Contact Person	Lea Case	**Title**	MWBE Liaison & Compliance Analyst
Telephone #	(718) 391-1003	**Email**	casele@ddc.nyc.gov

Project Description *(attach additional pages if necessary)*

PROJECT ID: QED1014

REHABILITATION OF EXISTING TRUNK WATER MAINS IN CRESCENT STREET FROM 34TH AVENUE TO 31ST AVENUE; 31ST AVENUE FROM CRESCENT STREET TO 41ST STREET; AND 41ST STREET FROM 31ST AVENUE TO 25TH AVENUE

INCLUDING DISTRIBUTION WATER MAIN, SEWER AND TRAFFIC SIGNAL WORK

Together With All Work Incidental Thereto
BOROUGH OF QUEENS
CITY OF NEW YORK

M/WBE Participation Goals for Services
Enter the percentage amount for each group or for an unspecified goal. Please note that there are no goals for Asian Americans in Professional Services.

Prime Contract Industry: Construction

Group	Percentage
Unspecified*	10%
or	
Black American	UNSPECIFIED*
Hispanic American	UNSPECIFIED*
Asian American	UNSPECIFIED*
Women	UNSPECIFIED*
Total Participation Goals	10% Line 1

**Note: For this procurement, individual ethnicity and gender goals are not specified. The Total Participation Goal for construction contracts may be met by using either Black-American, Hispanic-American, Asian American, or Women certified firms or any combination of such firms.*

Tax ID #: _____

APT E-
PIN #: 85016B0095

SCHEDULE B - Part II: M/WBE Participation Plan

Part II to be completed by the bidder/proposer.
Please note: For Non-M/WBE Prime Contractors who will NOT subcontract any services and will self-perform the entire contract, you must obtain a FULL waiver by completing the Waiver Application on pages 17 and 18 and timely submitting it to the contracting agency pursuant to the Notice to Prospective Contractors. Once a FULL WAIVER is granted, it must be included with your bid or proposal and you do not have to complete or submit this form with your bid or proposal.

Section I: Prime Contractor Contact Information

Tax ID # _____ **FMS Vendor ID #** _____

Business Name _____ **Contact Person** _____

Address _____

Telephone # _____ **Email** _____

Section II: M/WBE Utilization Goal Calculation: Check the applicable box and complete subsection.

PRIME CONTRACTOR ADOPTING AGENCY M/WBE PARTICIPATION GOALS

☐ **For Prime Contractors (including Qualified Joint Ventures and M/WBE firms) adopting Agency M/WBE Participation Goals.**	**Total Bid/Proposal Value**		**Agency Total Participation Goals (Line 1, Page 13)**		**Calculated M/WBE Participation Amount**
Calculate the total dollar value of your total bid that you agree will be awarded to M/WBE subcontractors for services and/or credited to an M/WBE prime contractor or Qualified Joint Venture. Please review the Notice to Prospective Contractors for more information on how to obtain credit for M/WBE participation.	$	X		=	$ Line 2

PRIME CONTRACTOR OBTAINED PARTIAL WAIVER APPROVAL: ADOPTING MODIFIED M/WBE PARTICIPATION GOALS

☐ **For Prime Contractors (including Qualified Joint Ventures and M/WBE firms) adopting Modified M/WBE Participation Goals.**	**Total Bid/Proposal Value**		**Adjusted Participation Goal (From Partial Waiver)**		**Calculated M/WBE Participation Amount**
Calculate the total dollar value of your total bid that you agree will be awarded to M/WBE subcontractors for services and/or credited to an M/WBE prime contractor or Qualified Joint Venture. Please review the Notice to Prospective Contractors for more information on how to obtain credit for M/WBE participation.	$	X		=	$ Line 3

Tax ID #:_____ APT E-PIN #: 85016B0110

Section III: M/WBE Utilization Plan: How Proposer/Bidder Will Fulfill M/WBE Participation Goals. Please review the Notice to Prospective Contractors for more information on how to obtain credit for M/WBE participation. Check applicable box. The Proposer or Bidder will fulfill the M/WBE Participation Goals:

☐ As an M/WBE Prime Contractor that will self-perform and/or subcontract to other M/WBE firms a portion of the contract the value of which is at least the amount located on Lines 2 or 3 above, as applicable. The value of any work subcontracted to non-M/WBE firms will not be credited towards fulfillment of M/WBE Participation Goals. Please check all that apply to Prime Contractor:

☐ MBE ☐ WBE

☐ As a Qualified Joint Venture with an M/WBE partner, in which the value of the M/WBE partner's participation and/or the value of any work subcontracted to other M/WBE firms is at least the amount located on Lines 2 or 3 above, as applicable. The value of any work subcontracted to non M/WBE firms will not be credited towards fulfillment of M/WBE Participation Goals.

☐ As a non M/WBE Prime Contractor that will enter into subcontracts with M/WBE firms the value of which is at least the amount located on Lines 2 or 3 above, as applicable.

Section IV: General Contract Information

What is the expected percentage of the total contract dollar value that you expect to award in subcontracts for services, regardless of M/WBE status? % _____

✓ Scopes of Subcontract Work

Enter brief description of the type(s) and dollar value of subcontracts for all/any services you plan on subcontracting if awarded this contract. For each item, indicate whether the work is designated for participation by MBEs and/or WBEs and the time frame in which such work is scheduled to begin and end. Use additional sheets if necessary.

1. _____
2. _____
3. _____
4. _____
5. _____
6. _____
7. _____
8. _____
9. _____
10. _____
11. _____
12. _____
13. _____
14. _____
15. _____
16. _____
17. _____

Tax ID #: _____

APT E-PIN #: 85016B0110

Section V: Vendor Certification and Required Affirmations

I hereby:

1) acknowledge my understanding of the M/WBE participation requirements as set forth herein and the pertinent provisions of Section 6-129 of the Administrative Code of the City of New York ("Section 6-129"), and the rules promulgated thereunder;

2) affirm that the information supplied in support of this M/WBE Utilization Plan is true and correct;

3) agree, if awarded this Contract, to comply with the M/WBE participation requirements of this Contract, the pertinent provisions of Section 6-129, and the rules promulgated thereunder, all of which shall be deemed to be material terms of this Contract;

4) agree and affirm that it is a material term of this Contract that the Vendor will award the total dollar value of the M/WBE Participation Goals to certified MBEs and/or WBEs, unless a full waiver is obtained or such goals are modified by the Agency; and

5) agree and affirm, if awarded this Contract, to make all reasonable, good faith efforts to meet the M/WBE Participation Goals, or If a partial waiver is obtained or such goals are modified by the Agency, to meet the modified Participation Goals by soliciting and obtaining the participation of certified MBE and/or WBE firms.

Signature _____ **Date** _____

Print Name _____ **Title** _____

SCHEDULE B – PART III – REQUEST FOR WAIVER OF M/WBE PARTICIPATION REQUIREMENT

Contract Overview

Tax ID # _____ **FMS Vendor ID #** _____

Business Name _____

Contact Name _____ **Telephone #** _____ **Email** _____

Type of Procurement ☐ **Competitive Sealed Bids** ☐ **Other** **Bid/Response Due Date** _____

APT E-PIN # (for this procurement): _____ **Contracting Agency:** _____

M/WBE Participation Goals ***as described in bid/solicitation documents***

_____ % **Agency M/WBE Participation Goal**

Proposed M/WBE Participation Goal ***as anticipated by vendor seeking waiver***

_____ % **of the total contract value anticipated in good faith by the bidder/proposer to be subcontracted for services and/or credited to an M/WBE Prime Contractor or Qualified Joint Venture.**

Basis for Waiver Request: ***Check appropriate box & explain in detail below (attach additional pages if needed)***

☐ **Vendor does not subcontract services, and has the capacity and good faith intention to perform all such work itself with its own employees.**

☐ **Vendor subcontracts *some* of this type of work but at a *lower* % than bid/solicitation describes, and has the capacity and good faith intention to do so on this contract. (Attach subcontracting plan outlining services that the vendor will self-perform and subcontract to other vendors or consultants.)**

☐ **Vendor has other legitimate business reasons for proposing the M/WBE Participation Goal above. Explain under separate cover.**

References

List 3 most recent contracts performed for NYC agencies (if any). Include information for each subcontract awarded in performance of such contracts. Add more pages if necessary.

CONTRACT NO. _____ **AGENCY** _____ **DATE COMPLETED** _____

Total Contract Amount $ _____ **Total Amount Subcontracted** $ _____

Item of Work Subcontracted and Value of subcontract _____ Item of Work Subcontracted and Value of subcontract _____ Item of Work Subcontracted and Value of subcontract _____

CONTRACT NO. _____ **AGENCY** _____ **DATE COMPLETED** _____

Total Contract Amount $ _____ **Total Amount Subcontracted** $ _____

Item of Work Subcontracted and Value of subcontract _____ Item of Work Subcontracted and Value of subcontract _____ Item of Work Subcontracted and Value of subcontract _____

CONTRACT NO. **AGENCY** **DATE COMPLETED**

Total Contract Amount $ **Total Amount Subcontracted** $

Item of Work Subcontracted and Value of subcontract _____ Item of Work Subcontracted and Value of subcontract _____ Item of Work Subcontracted and Value of subcontract _____

List 3 most recent contracts performed for other entities. Include information for each subcontract awarded in performance of such contracts. Add more pages if necessary.

(Complete ONLY if vendor has performed fewer than 3 New York City contracts.)

TYPE OF Contract _____ **ENTITY** _____ **DATE COMPLETED** _____

Manager at entity that hired vendor (Name/Phone No./Email) _____

Total Contract Amount $ _____ **Total Amount Subcontracted** $ _____

Type of Work Subcontracted _____ _____ _____

TYPE OF Contract _____ **AGENCY/ENTITY** _____ **DATE COMPLETED** _____

Manager at agency/entity that hired vendor (Name/Phone No./Email) _____

Total Contract Amount $ _____ **Total Amount Subcontracted** $ _____

Item of Work Subcontracted and Value of subcontract _____ Item of Work Subcontracted and Value of subcontract _____ Item of Work Subcontracted and Value of subcontract _____

TYPE OF Contract _____ **AGENCY/ENTITY** _____ **DATE COMPLETED** _____

Manager at entity that hired vendor (Name/Phone No./Email) _____

Total Contract Amount $ _____ **Total Amount Subcontracted** $ _____

Item of Work Subcontracted and Value of subcontract _____ Item of Work Subcontracted and Value of subcontract _____ Item of Work Subcontracted and Value of subcontract _____

VENDOR CERTIFICATION: *I hereby affirm that the information supplied in support of this waiver request is true and correct, and that this request is made in good faith.*

Signature: _____ **Date:** _____

Print Name: _____ **Title:** _____

Shaded area below is for agency completion only

AGENCY CHIEF CONTRACTING OFFICER APPROVAL

Signature: _____ **Date:** _____

CITY CHIEF PROCUREMENT OFFICER APPROVAL

Signature: _____ **Date:** _____

Waiver Determination

Full Waiver Approved: ☐
Waiver Denied: ☐
Partial Waiver Approved: ☐
Revised Participation Goal: ____ %

APPRENTICESHIP PROGRAM REQUIREMENTS

Bidders are advised that the Apprenticeship Program Requirements set forth below apply to each contract for which a check mark is indicated before the word "Yes". Compliance with these requirements will be determined solely by the City.

___√___ YES _____ NO

(1) Apprenticeship Program Requirements

Notice to Bidders: Please be advised that, pursuant to the authority granted to the City under Labor Law Section 816-b, the Department of Design and Construction hereby requires that the contractor awarded a contract as a result of this Invitation for Bids, and any of its subcontractors with subcontracts worth two million dollars or over, have, prior to entering into such contract or subcontract, apprenticeship agreements appropriate for the type and scope of work to be performed that have been registered with, and approved by, the New York State Commissioner of Labor. In addition, the contractor and its subcontractors will be required to show that such apprenticeship program/s have successfully passed the two year Probation period following the initial registration date of such program/s with the New York State Department of Labor.

The failure to prove, upon request, that these requirements have been met shall result in the contract not being awarded to the contractor or the subcontract not being approved.

Please be further advised that, pursuant to Labor Law Section 220, the allowable ratio of apprentices to journeypersons in any craft classification shall not be greater than the ratio permitted to the contractor as to its workforce on any job under the registered apprenticeship program.

(2) Apprenticeship Program Questionnaire

The bidder must submit a completed and signed Apprenticeship Program Questionnaire. The Questionnaire is set forth on the following page of the Bid Booklet.

APPRENTICESHIP PROGRAM QUESTIONNAIRE

PROJECT ID: SER200245

The bidder must submit a completed and signed Apprenticeship Program Questionnaire.

1. Does the bidder have an Apprenticeship Program appropriate for the type and scope of work to be performed? [Note: Participation may be by either direct sponsorship or through collective bargaining agreement(s).]

   _____ YES _____ NO

2. Has the bidder's Apprenticeship Program been registered with, and approved by, the New York State Commissioner of Labor?

   _____ YES _____ NO

3. Has the bidder's Apprenticeship Program had three years of successful experience in providing career opportunities?

   _____ YES _____ NO

If the answer to Question #3 is "Yes", the bidder shall, in the space below, provide information regarding the experience the Apprenticeship Program has had in providing career opportunities. The bidder may attach additional pages if necessary.

_____

_____

_____

_____

_____

_____

_____

_____

_____

_____

_____

Bidder: _____

By: _____ Title: _____
(Signature of Partner or Corporate Officer)

Date: _____

Project ID. _____

SAFETY QUESTIONNAIRE

The bidder must include, with its bid, all information requested on this Safety Questionnaire. Failure to provide a completed and signed Safety Questionnaire at the time of bid opening may result in disqualification of the bid as non-responsive.

1. Bidder Information:

Company Name: _____

DDC Project Number: _____

Company Size: _____ Ten (10) employees or less

_____ Greater than ten (10) employees

Company has previously worked for DDC _____ YES _____ NO

2. Type(s) of Construction Work

TYPE OF WORK	LAST 3 YEARS	THIS PROJECT
General Building Construction	_____	_____
Residential Building Construction	_____	_____
Nonresidential Building Construction	_____	_____
Heavy Construction, except building	_____	_____
Highway and Street Construction	_____	_____
Heavy Construction, except highways	_____	_____
Plumbing, Heating, HVAC	_____	_____
Painting and Paper Hanging	_____	_____
Electrical Work	_____	_____
Masonry, Stonework and Plastering	_____	_____
Carpentry and Floor Work	_____	_____
Roofing, Siding, and Sheet Metal	_____	_____
Concrete Work	_____	_____
Specialty Trade Contracting	_____	_____
Asbestos Abatement	_____	_____
Other (specify)		
_____	_____	_____

3. Experience Modification Rate:

The Experience Modification Rate (EMR) is a rating generated by the National Council of Compensation Insurance (NCCI). This rating is used to determine the contractor's premium for worker's compensation insurance. The contractor may obtain its EMR by contacting its insurance broker or the NCCI. If the contractor cannot obtain its EMR, it must submit a written explanation as to why.

Project ID. _____

The Contractor must indicate its Intrastate and Interstate EMR for the past three years. [Note: For contractors with less than three years of experience, the EMR will be considered to be 1.00].

YEAR	INTRASTATE RATE	INTERSTATE RATE
_____	_____	_____
_____	_____	_____
_____	_____	_____

If the Intrastate and/or Interstate EMR for any of the past three years is greater than 1.00, the contractor must attach, to this questionnaire, a written explanation for the rating and identify what corrective action was taken to correct the situation resulting in that rating.

4. OSHA Information:

____ YES ____ NO Contractor has received a willful violation issued by OSHA or New York City Department of Buildings (NYCDOB) within the last three years.

____ YES ____ NO Contractor has had an incident requiring OSHA notification within 8 hours (all work-related fatalities) or an incident requiring OSHA notification within 24 hours (all work-related in-patient hospitalizations, all amputations and all losses of an eye).

The Occupational Safety and Health Act (OSHA) of 1970 requires employers with ten or more employees, on a yearly basis to complete and maintain on file the form entitled "Log of Work-related Injuries and Illnesses". This form is commonly referred to as the OSHA 300 Log (OSHA 200 Log for 2001 and earlier).

The OSHA 300 Log must be submitted for the last three years for contractors with more than ten employees.

The Contractor must indicate the total number of hours worked by its employees, as reflected in payroll records for the past three years.

The contractor must submit the Incident Rate for Lost Time Injuries (the Incident Rate) for the past three years. The Incident Rate is calculated in accordance with the formula set forth below. For each given year, the total number of incidents is the total number of non-fatal injuries and illnesses reported on the OSHA 300 Log. The 200,000 hours represents the equivalent of 100 employees working forty hours a week, fifty weeks per year.

$$\text{Incident Rate} = \frac{\text{Total Number of Incidents X 200,000}}{\text{Total Number of Hours Worked by Employees}}$$

YEAR	TOTAL NUMBERS OF HOURS WORKED BY EMPLOYEES	INCIDENT RATE
_____	_____	_____
_____	_____	_____
_____	_____	_____

Project ID. _____

If the contractor's Incident Rate for any of the past three years is one point higher than the Incident Rate for the type of construction it performs (listed below), the contractor must attach, to this questionnaire, a written explanation for the relatively high rate.

General Building Construction	8.5
Residential Building Construction	7.0
Nonresidential Building Construction	10.2
Heavy Construction, except building	8.7
Highway and Street Construction	9.7
Heavy Construction, except highways	8.3
Plumbing, Heating, HVAC	11.3
Painting and Paper Hanging	6.9
Electrical Work	9.5
Masonry, Stonework and Plastering	10.5
Carpentry and Floor Work	12.2
Roofing, Siding, and Sheet Metal	10.3
Concrete Work	8.6
Specialty Trade Contracting	8.6

5. Safety Performance on Previous DDC Project(s)

____ YES ____ NO Contractor previously audited by the DDC Office of Site Safety.

DDC Project Number(s): _____, _____, _____

____ YES ____ NO Accident on previous DDC Project(s).

DDC Project Number(s): _____, _____, _____

____ YES ____ NO Fatality or Life-altering Injury on DDC Project(s) within the last three years. [Examples of a life-altering injury include loss of limb, loss of a sense (e.g., sight, hearing), or loss of neurological function].

DDC Project Number(s): _____, _____, _____

Date: _____ By: _____

(Signature of Owner, Partner, Corporate Officer)

Title: _____

(NO TEXT ON THIS PAGE)

Pre-Award Process

The bidder is advised that as part of the pre-award review of its bid, it may be required to submit the information described in Sections (A) through (D) below. If required, such information must be submitted by the bidder within five (5) business days following receipt of notification from DDC that it is among the low bidders. Such notification from DDC will be by facsimile or in writing and will specify the types of information must be submitted. The types of information the bidder may be required to submit are described below. In the event the bidder fails to submit the required information within the specified time frame, its bid may be rejected as nonresponsive.

****

(A) **Project Reference Form**: If required, the bidder must complete and submit the Project Reference Form set forth on pages 26 through 28 of this Bid Booklet. The Project Reference Form consists of 3 parts: (1) Similar Contracts Completed by the Bidder, (2) Contracts Currently Under Construction by the Bidder, and (3) Pending Contracts Not Yet Started by the Bidder.

(B) **Copy of License**: If required, the bidder must submit a copy of the license under which the bidder will be performing the work. Such license must clearly show the following: (1) Name of the Licensee, (2) License Number, and (3) Expiration date of the License. A copy of the license will be required from bidders for the following contracts: Plumbing Work, Electrical Work and Asbestos Abatement.

(C) **Financial Information**: If required, the bidder must submit the financial information described below:

(1) Audited Financial Statements: Financial statements (Balance Sheet and Income Statement) of the entity submitting the bid, as audited by an independent auditor licensed to practice as a certified public accountant (CPA). Audited financial statements for the three most recent fiscal years must be submitted. Each such financial statement must include the auditor's standard report.

If the bidder does not have audited financial statements, it must submit an affidavit attesting to the fact that the bidder does not have such statements. In addition, the bidder must submit the following documentation covering the three most recent fiscal years: signed federal tax returns, unaudited financial statements, and a "certified review letter" from a certified public accountant (CPA) verifying the unaudited financial statements.

Unless the most recent audited or unaudited financial statement was issued within ninety (90) days, the bidder must submit interim financial information that includes data on financial position and results of operation (income data) for the current fiscal year. Such information may be summarized on a monthly or quarterly basis or at other intervals.

(2) Schedule of Aged Accounts Receivable, including portion due within ninety (90) days.

(D) **Project Specific Information**: If required, the bidder must submit the project specific information described below:

(1) Statement indicating the number of years of experience the bidder has had and in what type of construction.
(2) Resumes of all key personnel to be involved in the project, including the proposed project superintendent.
(3) List of significant pieces of equipment expected to be used for the contract, and whether such equipment is owned or leased.
(4) Description of work expected to be subcontracted, and to what firms, if known.
(5) List of key material suppliers.
(6) Preliminary bar chart time schedule
(7) Contractor's expected means of financing the project. This should be based on the assumption that the contractor is required to finance 2X average monthly billings throughout the contract period.
(8) Any other issues the contractor sees as impacting his ability to complete the project according to the contract.

In addition to the information described in Sections (A) through (D) above, the bidder shall submit such additional information as the Commissioner may require, including without limitation, an explanation or justification for specific unit price items.

The bidder is further advised that it may be required to attend a pre-award meeting with DDC representatives. If such a meeting is convened, the bidder will be advised as to any additional material to be provided.

A. PROJECT REFERENCES – SIMILAR CONTRACTS COMPLETED BY THE BIDDER

List all contracts substantially completed within the last 4 years similar to the contract being awarded, up to a maximum of 10, in descending order of date of substantial completion.

Project & Location	Contract Type	Contract Amount ($000)	Date Completed	Owner Reference & Tel. No.	Architect/Engineer Reference & Tel. No. if different from owner

B. PROJECT REFERENCES – CONTRACTS CURRENTLY UNDER CONSTRUCTION BY THE BIDDER

List all contracts currently under construction even if they are not similar to the contract being awarded.

Project & Location	Contract Type	Contract Amount ($000)	Subcontracted to Others ($000)	Uncompleted Portion ($000)	Date Scheduled to Complete	Owner Reference & Tel. No.	Architect/Engineer Reference & Tel. No. if different from owner

C. PROJECT REFERENCES – PENDING CONTRACTS NOT YET STARTED BY THE BIDDER

List all contracts awarded to or won by the bidder but not yet started.

Project & Location	Contract Type	Contract Amount ($000)	Date Scheduled to Start	Owner Reference & Tel. No.	Architect/Engineer Reference & Tel. No. if different from owner

(NO TEXT ON THIS PAGE)

OFFICE OF THE MAYOR
BUREAU OF LABOR SERVICES
CONTRACT CERTIFICATE

To be completed if the contract is less than $1,000,000

Contractor: _____

Address: _____

_____

Telephone Number: _____

Name and Title of Signatory: _____

_____

Contracting Agency or Owner: _____

Project Number: _____

Proposed Contract Amount: _____

Description and Address of Proposed Contract: _____

Names of Subcontractors in the amount of 750,000 or more on this contract (if not known at this time, so state indicating that trades will be subcontracted):

_____

_____

_____

I, (fill in name of person signing) _____, hereby affirm that I am authorized by the above-named contractor to certify that said contractor's proposed contract with the above-named owner or city agency is less than $1,000,000. This affirmation is made in accordance with Executive Order No. 50 (1980) as amended and its implementing regulations.

_____ _____
Date Signature

WILLFUL OR FRAUDULENT FALSIFICATION OF ANY DATA OR INFORMATION SUBMITTED HEREWITH MAY RESULT IN THE TERMINATION OF ANY CONTRACT BETWEEN THE CITY AND THE BIDDER OR CONTRACTOR AND BAR THE BIDDER OR CONTRACTOR FROM PARTICIPATION IN ANY CITY CONTRACT FOR A PERIOD OF UP TO THREE YEARS. FURTHER, SUCH FALSIFICATION MAY RESULT IN CRIMINAL PROSECUTION.

(NO TEXT ON THIS PAGE)

VENDEX COMPLIANCE

(A) **Vendex Fees:** Pursuant to Procurement Policy Board Rule 2-08(f)(2), the contractor will be charged a fee for the administration of the VENDEX system, including the Vendor Name Check process, if a Vendor Name Check review is required to be conducted by the Department of Investigation. The contractor shall also be required to pay the applicable required fees for any of its subcontractors for which Vendor Name Check reviews are required. The fee(s) will be deducted from payments made to the contractor under the contract. For contracts with an estimated value of less than or equal to $1,000,000, the fee will be $175 per Vendor Name Check review. For contracts with an estimated value of greater than $1,000,000, the fee will be $350 per Vendor Name Check review.

(B) **Confirmation of Vendex Compliance:** The Bidder shall submit this Confirmation of Vendex Compliance to the Department of Design and Construction, Contracts Section, 30-30 Thomson Avenue – First Floor, Long Island City, NY 11101.

Bid Information: The Bidder shall complete the bid information set forth below.

Name of Bidder: _____
Bidder's Address: _____
Bidder's Telephone Number: _____
Bidder's Fax Number: _____
Date of Bid Opening: _____
Project ID: _____

Vendex Compliance: To demonstrate compliance with Vendex requirements, the Bidder shall complete either Section (1) or Section (2) below, whichever applies.

(1) **Submission of Vendex Questionnaires to MOCS:** By signing in the space provided below, the Bidder certifies that as of the date specified below, the Bidder has submitted Vendex Questionnaires to the Mayor's Office of Contract Services, Attn: VENDEX, 253 Broadway, 9th Floor, New York, New York 10007.

Date of Submission: _____

By: _____
(Signature of Partner or corporate officer)

Print Name: _____

(2) **Submission of Certification of No Change to DDC:** By signing in the space provided below, the Bidder certifies that it has read the instructions in a "Vendor's Guide to Vendex" and that such instructions do not require the Bidder to submit Vendex Questionnaires. The Bidder has completed **TWO ORIGINALS** of the Certification of No Change set forth on the next page of this Bid Booklet.

By: _____
(Signature of Partner or corporate officer)

Print Name: _____

(NO TEXT ON THIS PAGE)

Certificate of No Change Form

Mayor's Office of Contract Services

- Please submit two completed forms. Copies will not be accepted.
- Please send both copies to the agency that requested it, unless you are advised to send it directly to the Mayor's Office of Contract Services (MOCS).
- A materially false statement willfully or fraudulently made in connection with this certification, and/or the failure to conduct appropriate due diligence in verifying the information that is the subject of this certification, may result in rendering the submitting entity non-responsible for the purpose of contract award.
- A materially false statement willfully or fraudulently made in connection with this certification may subject the person making the false statement to criminal charges

I, _____, being duly sworn, state that I have read
Enter Your Name

and understand all the items contained in the vendor questionnaire and any submission of change as identified on page one of this form and certify that as of this date, these items have not changed. I further certify that, to the best of my knowledge, information and belief, those answers are full, complete, and accurate; and that, to the best of my knowledge, information, and belief, those answers continue to be full, complete, and accurate.

In addition, I further certify on behalf of the submitting vendor that the information contained in the principal questionnaire(s) and any submission of change identified on page two of this form have not changed and have been verified and continue, to the best of my knowledge, to be full, complete and accurate.

I understand that the City of New York will rely on the information supplied in this certification as additional inducement to enter into a contract with the submitting entity.

Vendor Questionnaire *This section is required.*

This refers to the vendor questionnaire(s) submitted for the vendor doing business with the City.

Name of Submitting Entity: _____

Vendor's Address: _____

Vendor's EIN or TIN: _____ Requesting Agency: _____

Are you submitting this Certification as a parent? (Please circle one) Yes No

Signature date on the last full vendor questionnaire signed for the submitting vendor: _____

Signature date on change submission for the submitting vendor: _____

Principal Questionnaire

This section refers to the most recent principal questionnaire submissions.

Mayor's Office of Contract Services

	Principal Name	Date of signature on last full Principal Questionnaire	Date(s) of signature on submission of change
1			
2			
3			
4			
5			
6			

☐ Check if additional changes were submitted and attach a document with the date of additional submissions.

Certification *This section is required.*

This form must be signed and notarized. Please complete this twice. Copies will not be accepted.

Certified By:

_____
Name (Print)

_____
Title

_____
Name of Submitting Entity

_____ _____
Signature *Date*

Notarized By:

_____ _____ _____
Notary Public *County License Issued* *License Number*

Sworn to before me on: _____
Date

Certificate of No Change Form

Mayor's Office of Contract Services

- Please submit two completed forms. Copies will not be accepted.
- Please send both copies to the agency that requested it, unless you are advised to send it directly to the Mayor's Office of Contract Services (MOCS).
- A materially false statement willfully or fraudulently made in connection with this certification, and/or the failure to conduct appropriate due diligence in verifying the information that is the subject of this certification, may result in rendering the submitting entity non-responsible for the purpose of contract award.
- A materially false statement willfully or fraudulently made in connection with this certification may subject the person making the false statement to criminal charges

I, _____, being duly sworn, state that I have read
Enter Your Name

and understand all the items contained in the vendor questionnaire and any submission of change as identified on page one of this form and certify that as of this date, these items have not changed. I further certify that, to the best of my knowledge, information and belief, those answers are full, complete, and accurate; and that, to the best of my knowledge, information, and belief, those answers continue to be full, complete, and accurate.

In addition, I further certify on behalf of the submitting vendor that the information contained in the principal questionnaire(s) and any submission of change identified on page two of this form have not changed and have been verified and continue, to the best of my knowledge, to be full, complete and accurate.

I understand that the City of New York will rely on the information supplied in this certification as additional inducement to enter into a contract with the submitting entity.

Vendor Questionnaire *This section is required.*

This refers to the vendor questionnaire(s) submitted for the vendor doing business with the City.

Name of Submitting Entity: _____

Vendor's Address: _____

Vendor's EIN or TIN: _____ Requesting Agency: _____

Are you submitting this Certification as a parent? (Please circle one) Yes No

Signature date on the last full vendor questionnaire signed for the submitting vendor: _____

Signature date on change submission for the submitting vendor: _____

Principal Questionnaire

This section refers to the most recent principal questionnaire submissions.

Mayor's Office of Contract Services

	Principal Name	Date of signature on last full Principal Questionnaire	Date(s) of signature on submission of change
1			
2			
3			
4			
5			
6			

☐ Check if additional changes were submitted and attach a document with the date of additional submissions.

Certification *This section is required.*

This form must be signed and notarized. Please complete this twice. Copies will not be accepted.

Certified By:

_____
Name (Print)

_____
Title

_____
Name of Submitting Entity

_____ _____
Signature *Date*

Notarized By:

_____ _____ _____
Notary Public *County License Issued* *License Number*

Sworn to before me on: _____
Date

IRAN DIVESTMENT ACT COMPLIANCE RIDER

FOR NEW YORK CITY CONTRACTORS

The Iran Divestment Act of 2012, effective as of April 12, 2012, is codified at State Finance Law ("SFL") §165-a and General Municipal Law ("GML") §103-g. The Iran Divestment Act, with certain exceptions, prohibits municipalities, including the City, from entering into contracts with persons engaged in investment activities in the energy sector of Iran. Pursuant to the terms set forth in SFL §165-a and GML §103-g, a person engages in investment activities in the energy sector of Iran if:

(a) The person provides goods or services of twenty million dollars or more in the energy sector of Iran, including a person that provides oil or liquefied natural gas tankers, or products used to construct or maintain pipelines used to transport oil or liquefied natural gas, for the energy sector of Iran; or

(b) The person is a financial institution that extends twenty million dollars or more in credit to another person, for forty-five days or more, if that person will use the credit to provide goods or services in the energy sector in Iran and is identified on a list created pursuant to paragraph (b) of subdivision three of Section 165-a of the State Finance Law and maintained by the Commissioner of the Office of General Services.

A bid or proposal shall not be considered for award nor shall any award be made where the bidder or proposer fails to submit a signed and verified bidder's certification.

Each bidder or proposer must certify that it is not on the list of entities engaged in investment activities in Iran created pursuant to paragraph (b) of subdivision 3 of Section 165-a of the State Finance Law. In any case where the bidder or proposer cannot certify that they are not on such list, the bidder or proposer shall so state and shall furnish with the bid or proposal a signed statement which sets forth in detail the reasons why such statement cannot be made. The City of New York may award a bid to a bidder who cannot make the certification on a case by case basis if:

(1) The investment activities in Iran were made before the effective date of this section (i.e., April 12, 2012), the investment activities in Iran have not been expanded or renewed after the effective date of this section and the person has adopted, publicized and is implementing a formal plan to cease the investment activities in Iran and to refrain from engaging in any new investments in Iran: or

(2) The City makes a determination that the goods or services are necessary for the City to perform its functions and that, absent such an exemption, the City would be unable to obtain the goods or services for which the contract is offered. Such determination shall be made in writing and shall be a public document.

BIDDER'S CERTIFICATION OF COMPLIANCE WITH IRAN DIVESTMENT ACT

Pursuant to General Municipal Law §103-g, which generally prohibits the City from entering into contracts with persons engaged in investment activities in the energy sector of Iran, the bidder/proposer submits the following certification:

[*Please Check One*]

BIDDER'S CERTIFICATION

☐ By submission of this bid or proposal, each bidder/proposer and each person signing on behalf of any bidder/proposer certifies, and in the case of a joint bid each party thereto certifies as to its own organization, under penalty of perjury, that to the best of its knowledge and belief, that each bidder/proposer is not on the list created pursuant to paragraph (b) of subdivision 3 of Section 165-a of the State Finance Law.

☐ I am unable to certify that my name and the name of the bidder/proposer does not appear on the list created pursuant to paragraph (b) of subdivision 3 of Section 165-a of the State Finance Law. I have attached a signed statement setting forth in detail why I cannot so certify.

_____
SIGNATURE

_____
PRINTED NAME

_____
TITLE

Sworn to before me this
_____ day of_____, 20____

_____
Notary Public

Dated:

THE CITY OF NEW YORK
DEPARTMENT OF SMALL BUSINESS SERVICES
DIVISION OF LABOR SERVICES
CONTRACT COMPLIANCE UNIT
110 WILLIAMS STREET
NEW YORK, NEW YORK 10038
PHONE: (212) 513-6323
FAX: (212) 618-8879

CONSTRUCTION

EMPLOYMENT

REPORT

(NO TEXT ON THIS PAGE)

The City of New York
Department of Small Business Services
Division of Labor Services
Contract Compliance Unit
110 William Street
New York, New York 10038
Phone: (212) 513 – 6323
Fax: (212) 618-8879

CONSTRUCTION EMPLOYMENT REPORT INSTRUCTIONS

WHO MUST FILE A CONSTRUCTION EMPLOYMENT REPORT

A Construction Employment Report (ER) must be filed if you meet the following conditions:

CONTRACT FUNDING SOURCE	CONTRACTOR	CONTRACT VALUE	SUBMISSION REQUIREMENT
Federal/Federally assisted	Prime and subcontractors	$10,000 or greater	Construction Employment Report
City and state funded	Prime contractor	$1,000,000 or greater	
	Subcontractor	$750,000 or greater	
		Less than $750,000	Less than $750,000 Certificate (City/State Only)

Prime Contractor:

- A general contractor or construction manager selected to perform work on a construction project funded (in whole or in part) by the federal government with a proposed contract value of $10,000 or more.
- A general contractor or construction manager selected to perform work on a construction project funded or assisted by the City of New York with a proposed contract value of $1,000,000 or more.

Subcontractor:

- A subcontractor selected to perform work on a construction project funded (in whole or in part) by the federal government with a proposed contract value of $10,000 or more.
- A subcontractor selected to perform work on a construction project funded or assisted by the City of New York with a proposed contract value of $750,000 or more.
- A subcontractor selected to perform work on a construction project funded or assisted by the City of New York with a proposed contract value of less than $750,000 must submit a "Less than $750,000" certificate.

WHERE TO FILE

Employment Reports must be filed with the City agency awarding the contract. If you are a contractor or subcontractor who will be working for a private developer in receipt of funding or assistance from the City, the ER must be filed with the City agency with jurisdiction over the developer's project.

DLS REVIEW PROCESS

In accordance with Executive Order 50 (EO 50), upon receipt by DLS of a completed ER, DLS conducts a review of the contractor's current employment policies, practices and procedures, as well as perform a statistical analysis of the contractor's workforce, if necessary. The process is as follows:

1. Within five (5) business days, DLS will review the ER for completeness and accuracy. If any information is omitted or incorrect, or if necessary documents are not submitted, the submission shall be deemed incomplete and DLS will inform the contractor. The substantive compliance review does not commence until the submission is complete. **An incomplete submission will delay the review process and may preclude or interrupt the contract approval.**

2. If the ER submission is complete, the compliance review will proceed, resulting in one of the following:

   Certificate of Approval
   The contractor is found to be in compliance with all applicable laws and regulations. The approval is valid for 36 months.

   Continued Approval Certificate
   The contractor has been issued a Certificate of Approval in the previous 36 months which is good for the applicable contract.

   Conditional Certificate of Compliance
   The contractor is required to take corrective actions in order to be in compliance with EO 50. The contractor must meet the conditions within one month of the issue of the Conditional Certificate.

   Determination of Nonperformance
   The contractor has failed to take the required corrective actions stipulated in the Conditional Certificate. A determination of nonperformance may prevent a contractor from receiving an award of a contract.

HOW TO COMPLETE THE EMPLOYMENT REPORT

Contents

General Information
Part I: Contractor/Subcontractor Information
Part II: Employment Policies and Practices
Part III: Contract Bid Information and Projected and Current Workforce Forms
Signature Page

PART I: CONTRACTOR/SUBCONTRACTOR INFORMATION

Questions 7 – 11: Please provide the required contact information for your company. All contracts must have a designated Equal Employment Officer.

Question 12: If you are a subcontractor, you must state the name of the contractor for whom you are providing the construction services.

Question 13: Please provide the number of permanent employees in your company.

Question 14a-g: The Project Identification Number (PIN) and the Contract Registration ID Number (CT#) can be obtained from the City agency. Provide a description of the trade work you will perform on this project and the address where the work will be performed. Subcontractors can obtain this information from the contract they have with the prime contractor.

Questions 15 – 18: If your company has received a valid Certificate of Approval within the past 36 months, been audited by the United States Department of Labor, Office of Federal Contract Compliance Programs (OFCCP), or if your company has submitted an ER for a different contract for which you have not yet received a compliance certificate, then you only need to complete and submit the following:

- General Information section
- Part I - Contractor/Subcontractor Information
- Form B - Projected Workforce
- Signature Page

If your company is currently waiting for an approval on another contract previously submitted, be certain to identify the date on which you submitted the completed Employment Report, the name of the City contracting agency with which the contract was made, and the name and telephone number of the person to whom the Employment Report was submitted.

If your company was issued a Conditional Certificate of Approval, all required corrective actions must have been taken or DLS will not issue a Continued Certificate.

Question 18: If the company was audited by the OFCCP, also provide the following:

- Identify the reviewing OFCCP office by its name and address
- If an unconditional certificate of compliance was issued by the OFCCP, attach a copy of the certificate in lieu of completing Parts II and III;
- Include copies of all corrective actions and documentation of OFCCP's performance; and
- Provide a copy of all stated OFCCP findings.

Question 19: Please provide a copy of any Collective Bargaining Agreement(s) which is negotiated through an employer trade association on behalf of your organization or any of its affiliates.

PART II: EMPLOYMENT POLICIES AND PRACTICES

Remember to label all documents with the question number for which they are submitted.

Questions 20a – j: You must respond to the questions as to whether or not your firm has documents reflecting written policies, benefits and procedures. If so, then you must identify by name each document in which the policy(ies), procedure(s) and benefit(s) is located and submit copies of all of the document(s). If your firm follows unwritten practices or procedures, include an explanation of how they operate. Please submit the most current document(s), including all applicable amendments. Label each document and/or unwritten practice according to the question to which it corresponds (e.g. 20a, 20b, etc.)

Questions 21a – h: Inquires about the manner/methods by which you comply with the requirements of the Immigration Reform and Control Act of 1986 (IRCA).

Question 22: Inquires into where and how I-9 forms are maintained and stored.

Questions 23a – e: Inquires into whether or not there is a requirement that an applicant or employee be subjected to a medical examination at any given time. Copes of the medical information questionnaire and instructions must be submitted with the Employment Report.

Question 24: Indicate the existence and location of all statements of your firm's Equal Employment Opportunity policy and attach a copy of each statement.

Question 25: Submit any current Affirmative Action Plan(s) created pursuant to Executive Order 11246.

Question 26: If your firm or collective bargaining agreement has an internal grievance procedure, indicate this and submit a copy of the policy and procedure. If unwritten, explain its nature and operation. Explain how your firm's procedure addresses EEO complaints.

Question 27: If your employees have used the procedure in the last three (3) years, please submit an explanation in the format indicated below:

1. Number of complaint(s)	2. Nature of the complaint(s)	3. Position(s) of the complainant(s)	4. Was an investigation conducted? Y/N	5. Current status of the disposition

Question 28: Indicate whether in the past three (3) years complaints have been filed with a court of law or administrative agency, naming your company as a defendant (or respondent) in a complaint alleging violation of any anti-discrimination or affirmative action laws. If yes, develop and submit a log to show, for each administrative/and or judicial action filed, the following information:

1. Name(s) of complainant(s)	2. Administrative agency or court in which action was filed	3. Nature of the complaint(s)	4. Current status	5. If not pending, the complaint's disposition

Question 29: Identify each job for which a physical qualification exists. Identify and explain the physical qualification(s) for each stated job. Submit job descriptions for each job and the reasons for the qualifications.

Question 30: Identify each job for which there exists any qualification related to age, race, color, national origin, sex, creed, disability, marital status, sexual orientation or citizenship status. Identify and explain the specific related qualification for each job stated. Submit job descriptions for each job and the reasons for the qualifications.

PART III: CONTRACT BID INFORMATION AND PROJECTED AND CURRENT WORKFORCE FORMS

FORM A: CONTRACT BID INFORMATION – USE OF SUBCONTRACTORS/TRADES

Your projections for the utilization of subcontractors on the proposed contract are to be provided in this section. A chart has been provided for the identification of subcontractors. Information is to be provided to the extent known at the time the ER is filed for review by DLS. If the subcontractor's name is unknown, then write "unknown". Under "ownership", enter the appropriate race/ethnic and gender code. If the contract is federally funded or assisted and the subcontractor is being utilized in accordance with applicable federal requirements with respect to Minority Business Enterprise or Woman Business Enterprise requirements, enter the appropriate code. This will also apply to state funded contracts with similar requirements for minority and female owned businesses.

FORM B: PROJECTED WORKFORCE FOR WORK TO BE PERFORMED ON THIS PROJECT

For each trade to be engaged by your company for this project, enter the projected workforce for Males and Females by trade classification in the charts provided.

FORM C: CURRENT WORKFORCE FOR WORK TO BE PERFORMED ON THIS PROJECT

For each trade *currently* engaged by your company for all work performed in NYC, enter the current workforce for Males and Females by trade classification in the charts provided.

SIGNATURE PAGE

The signatory of this Employment Report and all other documents submitted to DLS must be an official authorized to enter into a binding legal agreement. The signature page must be completed in its entirety and notarized. Only original signatures will be accepted.

The City of New York Department of Small Business Services
Division of Labor Services Contract Compliance Unit
110 William Street, New York, New York 10038
Phone: (212) 513 - 6323
Fax: (212) 618-8879

CONSTRUCTION EMPLOYMENT REPORT

GENERAL INFORMATION

1. Your contractual relationship in this contract is: Prime contractor_x_ Subcontractor____

1a. Are M/WBE goals attached to this project? Yes ____ No ____

2. Please check one of the following if your firm would like information on how to certify with the City of New York as a:

___Minority Owned Business Enterprise
___Women Owned Business Enterprise
___Disadvantaged Business Enterprise
___Locally Based Business Enterprise
___Emerging Business Enterprise

2a. If you are certified as an **MBE, WBE, LBE, EBE** or **DBE**, what city/state agency are you certified with? _____ Are you DBE certified? Yes ____ No ____

3. Please indicate if you would like assistance from SBS in identifying certified M/WBEs for contracting opportunities: Yes___ No___

4. Is this project subject to a project labor agreement? Yes ____ No ____

5. Are you a Union contractor? Yes ____ No ____ If yes, please list which local(s) you affiliated with _____

6. Are you a Veteran owned company? Yes ____ No ____

PART I: CONTRACTOR/SUBCONTRACTOR INFORMATION

7. _____
Employer Identification Number or Federal Tax I.D. Email Address

8. _____
Company Name

9. _____
Company Address and Zip Code

10. _____
Chief Operating Officer Telephone Number

11. _____
Designated Equal Opportunity Compliance Officer Telephone Number
(If same as Item #10, write "same")

12. _____
Name of Prime Contractor and Contact Person
(If same as Item #8, write "same")

13. Number of employees in your company: _____

14. Contract information:

(a) _____
Contracting Agency (City Agency)

(b) _____
Contract Amount

(c) _____
Procurement Identification Number (PIN)

(d) _____
Contract Registration Number (CT#)

(e) _____
Projected Commencement Date

(f) _____
Projected Completion Date

(g) Description and location of proposed contract:

_____

_____

15. Has your firm been reviewed by the Division of Labor Services (DLS) within the past 36 months and issued a Certificate of Approval? Yes___ No___

If yes, attach a copy of certificate.

16. Has DLS within the past month reviewed an Employment Report submission for your company and issued a Conditional Certificate of Approval? Yes___ No___

If yes, attach a copy of certificate.

NOTE: DLS WILL NOT ISSUE A CONTINUED CERTIFICATE OF APPROVAL IN CONNECTION WITH THIS CONTRACT UNLESS THE REQUIRED CORRECTIVE ACTIONS IN PRIOR CONDITIONAL CERTIFICATES OF APPROVAL HAVE BEEN TAKEN.

17. Has an Employment Report already been submitted for a different contract (not covered by this Employment Report) for which you have not yet received compliance certificate?
Yes___ No___ If yes,

Date submitted: _____
Agency to which submitted: _____
Name of Agency Person: _____
Contract No: _____
Telephone: _____

18. Has your company in the past 36 months been audited by the United States Department of Labor, Office of Federal Contract Compliance Programs (OFCCP)? Yes___ No___

If yes,

(a) Name and address of OFCCP office.

_____

_____

(b) Was a Certificate of Equal Employment Compliance issued within the past 36 months? Yes___ No___

If yes, attach a copy of such certificate.

(c) Were any corrective actions required or agreed to? Yes___ No___

If yes, attach a copy of such requirements or agreements.

(d) Were any deficiencies found? Yes___ No___

If yes, attach a copy of such findings.

19. Is your company or its affiliates a member or members of an employers' trade association which is responsible for negotiating collective bargaining agreements (CBA) which affect construction site hiring? Yes___ No___

If yes, attach a list of such associations and all applicable CBA's.

PART II: DOCUMENTS REQUIRED

20. For the following policies or practices, attach the relevant documents (e.g., printed booklets, brochures, manuals, memoranda, etc.). If the policy(ies) are unwritten, attach a full explanation of the practices. See instructions.

___ (a) Health benefit coverage/description(s) for all management, nonunion and union employees (whether company or union administered)

___ (b) Disability, life, other insurance coverage/description

___ (c) Employee Policy/Handbook

___ (d) Personnel Policy/Manual

___ (e) Supervisor's Policy/Manual

___ (f) Pension plan or 401k coverage/description for all management, nonunion and union employees, whether company or union administered

___ (g) Collective bargaining agreement(s).

___ (h) Employment Application(s)

___ (i) Employee evaluation policy/form(s).

___ (j) Does your firm have medical and/or non-medical (i.e. education, military, personal, pregnancy, child care) leave policy?

21. To comply with the Immigration Reform and Control Act of 1986 when and of whom does your firm require the completion of an I-9 Form?

(a) Prior to job offer Yes___ No___
(b) After a conditional job offer Yes___ No___
(c) After a job offer Yes___ No___
(d) Within the first three days on the job Yes___ No___
(e) To some applicants Yes___ No___
(f) To all applicants Yes___ No___
(g) To some employees Yes___ No___
(h) To all employees Yes___ No___

22. Explain where and how completed I-9 Forms, with their supportive documentation, are maintained and made accessible.

_____

_____

23. Does your firm or any of its collective bargaining agreements require job applicants to take a medical examination? Yes___ No___

If yes, is the medical examination given:

(a) Prior to a job offer Yes___ No___
(b) After a conditional job offer Yes___ No___
(c) After a job offer Yes___ No___
(d) To all applicants Yes___ No___
(e) Only to some applicants Yes___ No___

If yes, list for which applicants below and attach copies of all medical examination or questionnaire forms and instructions utilized for these examinations.

_____

_____

24. Do you have a written equal employment opportunity (EEO) policy? Yes___ No___

If yes, list the document(s) and page number(s) where these written policies are located.

_____

_____

25. Does the company have a current affirmative action plan(s) (AAP)
_____Minorities and Women
_____Individuals with handicaps
_____Other. Please specify _____

26. Does your firm or collective bargaining agreement(s) have an internal grievance procedure with respect to EEO complaints? Yes___ No___

If yes, please attach a copy of this policy.

If no, attach a report detailing your firm's unwritten procedure for handling EEO complaints.

27. Has any employee, within the past three years, filed a complaint pursuant to an internal grievance procedure or with any official of your firm with respect to equal employment opportunity? Yes___ No___

If yes, attach an internal complaint log. See instructions.

28. Has your firm, within the past three years, been named as a defendant (or respondent) in any administrative or judicial action where the complainant (plaintiff) alleged violation of any anti-discrimination or affirmative action laws? Yes___ No___

If yes, attach a log. See instructions.

29. Are there any jobs for which there are physical qualifications? Yes___ No___

If yes, list the job(s), submit a job description and state the reason(s) for the qualification(s).

_____

_____

30. Are there any jobs for which there are age, race, color, national origin, sex, creed, disability, marital status, sexual orientation, or citizenship qualifications? Yes___ No___

If yes, list the job(s), submit a job description and state the reason(s) for the qualification(s).

_____

_____

SIGNATURE PAGE

I, (print name of authorized official signing)_____ hereby certify that the information submitted herewith is true and complete to the best of my knowledge and belief and submitted with the understanding that compliance with New York City's equal employment requirements, as contained in Chapter 56 of the City Charter, Executive Order No. 50 (1980), as amended, and the implementing Rules and Regulations, is a contractual obligation. I also agree on behalf of the company to submit a certified copy of payroll records to the Division of Labor Services on a monthly basis.

_____

Contractor's Name

_____

Name of person who prepared this Employment Report Title

_____

Name of official authorized to sign on behalf of the contractor Title

_____

Telephone Number

_____

Signature of authorized official Date

If contractors are found to be underutilizing minorities and females in any given trade based on Chapter 56 Section 3H, the Division of Labor Services reserves the right to request the contractor's workforce data and to implement an employment program.

Contractors who fail to comply with the above mentioned requirements or are found to be in noncompliance may be subject to the withholding of final payment.

Willful or fraudulent falsifications of any data or information submitted herewith may result in the termination of the contract between the City and the bidder or contractor and in disapproval of future contracts for a period of up to five years. Further, such falsification may result in civil and/and or criminal prosecution.

To the extent permitted by law and consistent with the proper discharge of DLS' responsibilities under Charter Chapter 56 of the City Charter and Executive Order No. 50 (1980) and the implementing Rules and Regulations, all information provided by a contractor to DLS shall be confidential.

Only original signatures accepted.

Sworn to before me this _____ day of _____ 20 _____

_____

Notary Public Authorized Signature Date

FOR OFFICIAL USE ONLY: File No._____

FORM A. CONTRACT BID INFORMATION: USE OF SUBCONTRACTORS/TRADES

1. Do you plan to subcontractor work on this contract? Yes___ No___

2. If yes, complete the chart below.

NOTE: All proposed subcontractors with a subcontract in excess of $750,000 must complete an Employment Report for review and approval before the contract may be awarded and work commences.

SUBCONTRACTOR'S NAME*	OWNERSHIP (ENTER APPROPRIATE CODE LETTERS BELOW)	WORK TO BE PERFORMED BY SUBCONTRACTOR	TRADE PROJECTED FOR USE BY SUBCONTRACTOR	PROJECTED DOLLAR VALUE OF SUBCONTRACT

***If subcontractor is presently unknown, please enter the trade (craft name).**

OWNERSHIP CODES
- W: White
- B: Black
- H: Hispanic
- A: Asian
- N: Native American
- F: Female

FOR OFFICIAL USE ONLY: File No._____

FORM B: PROJECTED WORKFORCE

TRADE CLASSIFICATION CODES

(J) Journeylevel Workers
(H) Helper
(TOT) Total by Column
(A) Apprentice
(TRN) Trainee

For each trade to be engaged by your company for this project, enter the projected workforce for Males and Females by trade classification on the charts below.

Trade: _____

Union Affiliation, if applicable _____

Total (Col. #1-10): _____

Total Minority, Male & Female (Col. #2,3,4,5,7,8,9, & 10): _____

Total Female (Col. #6 – 10): _____

	MALES					FEMALES				
	(1) White Non Hisp.	(2) Black Non Hisp.	(3) Hisp.	(4) Asian	(5) Native Amer.	(6) White Non Hisp.	(7) Black Non Hisp.	(8) Hisp.	(9) Asian	(10) Native Amer.
J										
H										
A										
TRN										
TOT										

What are the recruitment sources for you projected hires (i.e., unions, government employment office, job tap center, community outreach)?

_____

_____

FOR OFFICE USE ONLY: File No._____

FORM B: PROJECTED WORKFORCE

Trade: _____

Union Affiliation, if applicable _____

Total (Col. #1-10): _____

Total Minority, Male & Female (Col. #2,3,4,5,7,8,9, & 10): _____

Total Female (Col. #6 – 10): _____

	MALES					FEMALES				
	(1) White Non Hisp.	(2) Black Non Hisp.	(3) Hisp.	(4) Asian	(5) Native Amer.	(6) White Non Hisp.	(7) Black Non Hisp.	(8) Hisp.	(9) Asian	(10) Native Amer.
J										
H										
A										
TRN										
TOT										

What are the recruitment sources for you projected hires (i.e., unions, government employment office, job tap center, community outreach)?

_____

_____

FORM C: CURRENT WORKFORCE

TRADE CLASSIFICATION CODES

(J) Journeylevel Workers
(H) Helper
(TOT) Total by Column
(A) Apprentice
(TRN) Trainee

For each trade currently engaged by your company for all work performed in New York City, enter the current workforce for Males and Females by trade classification on the charts below.

Trade: _____

Union Affiliation, if applicable _____

Total (Col. #1-10): _____

Total Minority, Male & Female (Col. #2,3,4,5,7,8,9, & 10): _____

Total Female (Col. #6 – 10): _____

	MALES					FEMALES				
	(1) White Non Hisp.	(2) Black Non Hisp.	(3) Hisp.	(4) Asian	(5) Native Amer.	(6) White Non Hisp.	(7) Black Non Hisp.	(8) Hisp.	(9) Asian	(10) Native Amer.
J										
H										
A										
TRN										
TOT										

What are the recruitment sources for you projected hires (i.e., unions, government employment office, job tap center, community outreach)?

_____

_____

FOR OFFICE USE ONLY: File No._____

FORM C: CURRENT WORKFORCE

Trade: _____

Union Affiliation, if applicable _____

Total (Col. #1-10): _____

Total Minority, Male & Female (Col. #2,3,4,5,7,8,9, & 10): _____

Total Female (Col. #6 – 10): _____

	MALES					FEMALES				
	(1) White Non Hisp.	(2) Black Non Hisp.	(3) Hisp.	(4) Asian	(5) Native Amer.	(6) White Non Hisp.	(7) Black Non Hisp.	(8) Hisp.	(9) Asian	(10) Native Amer.
J										
H										
A										
TRN										
TOT										

What are the recruitment sources for you projected hires (i.e., unions, government employment office, job tap center, community outreach)?

_____

_____

FOR OFFICIAL USE ONLY: File No._____

(NO TEXT ON THIS PAGE)

The City of New York Department of Small Business Services
Division of Labor Services Contract Compliance Unit
110 William Street, New York, New York 10038
Phone: (212) 513 - 6323
Fax: (212) 618-8879

CONSTRUCTION EMPLOYMENT REPORT

GENERAL INFORMATION

1. Your contractual relationship in this contract is: Prime contractor____ Subcontractor_x_

1a. Are M/WBE goals attached to this project? Yes ____ No ____

2. Please check one of the following if your firm would like information on how to certify with the City of New York as a:

___Minority Owned Business Enterprise
___Women Owned Business Enterprise
___Disadvantaged Business Enterprise
___Locally Based Business Enterprise
___Emerging Business Enterprise

2a. If you are certified as an **MBE**, **WBE**, **LBE, EBE** or **DBE**, what city/state agency are you certified with? _____ Are you DBE certified? Yes ____ No ____

3. Please indicate if you would like assistance from SBS in identifying certified M/WBEs for contracting opportunities: Yes___ No___

4. Is this project subject to a project labor agreement? Yes ____ No ____

5. Are you a Union contractor? Yes ____ No ____ If yes, please list which local(s) you affiliated with _____

6. Are you a Veteran owned company? Yes ____ No ____

PART I: CONTRACTOR/SUBCONTRACTOR INFORMATION

7. _____
Employer Identification Number or Federal Tax I.D. Email Address

8. _____
Company Name

9. _____
Company Address and Zip Code

10. _____
Chief Operating Officer Telephone Number

11. _____
Designated Equal Opportunity Compliance Officer Telephone Number
(If same as Item #10, write "same")

12. _____
Name of Prime Contractor and Contact Person
(If same as Item #8, write "same")

13. Number of employees in your company: _____

14. Contract information:

(a) _____
Contracting Agency (City Agency)

(b) _____
Contract Amount

(c) _____
Procurement Identification Number (PIN)

(d) _____
Contract Registration Number (CT#)

(e) _____
Projected Commencement Date

(f) _____
Projected Completion Date

(g) Description and location of proposed contract:

_____

_____

15. Has your firm been reviewed by the Division of Labor Services (DLS) within the past 36 months and issued a Certificate of Approval? Yes___ No___

If yes, attach a copy of certificate.

16. Has DLS within the past month reviewed an Employment Report submission for your company and issued a Conditional Certificate of Approval? Yes___ No___

If yes, attach a copy of certificate.

NOTE: DLS WILL NOT ISSUE A CONTINUED CERTIFICATE OF APPROVAL IN CONNECTION WITH THIS CONTRACT UNLESS THE REQUIRED CORRECTIVE ACTIONS IN PRIOR CONDITIONAL CERTIFICATES OF APPROVAL HAVE BEEN TAKEN.

17. Has an Employment Report already been submitted for a different contract (not covered by this Employment Report) for which you have not yet received compliance certificate?
Yes___ No___ If yes,

Date submitted: _____
Agency to which submitted: _____
Name of Agency Person: _____
Contract No: _____
Telephone: _____

18. Has your company in the past 36 months been audited by the United States Department of Labor, Office of Federal Contract Compliance Programs (OFCCP)? Yes___ No___

If yes,

(a) Name and address of OFCCP office.

_____

_____

(b) Was a Certificate of Equal Employment Compliance issued within the past 36 months? Yes___ No___

If yes, attach a copy of such certificate.

(c) Were any corrective actions required or agreed to? Yes___ No___

If yes, attach a copy of such requirements or agreements.

(d) Were any deficiencies found? Yes___ No___

If yes, attach a copy of such findings.

19. Is your company or its affiliates a member or members of an employers' trade association which is responsible for negotiating collective bargaining agreements (CBA) which affect construction site hiring? Yes___ No___

If yes, attach a list of such associations and all applicable CBA's.

PART II: DOCUMENTS REQUIRED

20. For the following policies or practices, attach the relevant documents (e.g., printed booklets, brochures, manuals, memoranda, etc.). If the policy(ies) are unwritten, attach a full explanation of the practices. See instructions.

___ (a) Health benefit coverage/description(s) for all management, nonunion and union employees (whether company or union administered)

___ (b) Disability, life, other insurance coverage/description

___ (c) Employee Policy/Handbook

___ (d) Personnel Policy/Manual

___ (e) Supervisor's Policy/Manual

___ (f) Pension plan or 401k coverage/description for all management, nonunion and union employees, whether company or union administered

___ (g) Collective bargaining agreement(s).

___ (h) Employment Application(s)

___ (i) Employee evaluation policy/form(s).

___ (j) Does your firm have medical and/or non-medical (i.e. education, military, personal, pregnancy, child care) leave policy?

21. To comply with the Immigration Reform and Control Act of 1986 when and of whom does your firm require the completion of an I-9 Form?

(a) Prior to job offer	Yes___	No___
(b) After a conditional job offer	Yes___	No___
(c) After a job offer	Yes___	No___
(d) Within the first three days on the job	Yes___	No___
(e) To some applicants	Yes___	No___
(f) To all applicants	Yes___	No___
(g) To some employees	Yes___	No___
(h) To all employees	Yes___	No___

22. Explain where and how completed I-9 Forms, with their supportive documentation, are maintained and made accessible.

_____

_____

23. Does your firm or any of its collective bargaining agreements require job applicants to take a medical examination? Yes___ No___

If yes, is the medical examination given:

(a) Prior to a job offer	Yes___	No___
(b) After a conditional job offer	Yes___	No___
(c) After a job offer	Yes___	No___
(d) To all applicants	Yes___	No___
(e) Only to some applicants	Yes___	No___

If yes, list for which applicants below and attach copies of all medical examination or questionnaire forms and instructions utilized for these examinations.

_____

_____

24. Do you have a written equal employment opportunity (EEO) policy? Yes___ No___

If yes, list the document(s) and page number(s) where these written policies are located.

_____

_____

25. Does the company have a current affirmative action plan(s) (AAP)

_____Minorities and Women

_____Individuals with handicaps

_____Other. Please specify _____

26. Does your firm or collective bargaining agreement(s) have an internal grievance procedure with respect to EEO complaints? Yes___ No___

If yes, please attach a copy of this policy.

If no, attach a report detailing your firm's unwritten procedure for handling EEO complaints.

27. Has any employee, within the past three years, filed a complaint pursuant to an internal grievance procedure or with any official of your firm with respect to equal employment opportunity? Yes___ No___

If yes, attach an internal complaint log. See instructions.

28. Has your firm, within the past three years, been named as a defendant (or respondent) in any administrative or judicial action where the complainant (plaintiff) alleged violation of any anti-discrimination or affirmative action laws? Yes___ No___

If yes, attach a log. See instructions.

29. Are there any jobs for which there are physical qualifications? Yes___ No___

If yes, list the job(s), submit a job description and state the reason(s) for the qualification(s).

_____

_____

30. Are there any jobs for which there are age, race, color, national origin, sex, creed, disability, marital status, sexual orientation, or citizenship qualifications? Yes___ No___

If yes, list the job(s), submit a job description and state the reason(s) for the qualification(s).

_____

_____

SIGNATURE PAGE

I, (print name of authorized official signing)_____ hereby certify that the information submitted herewith is true and complete to the best of my knowledge and belief and submitted with the understanding that compliance with New York City's equal employment requirements, as contained in Chapter 56 of the City Charter, Executive Order No. 50 (1980), as amended, and the implementing Rules and Regulations, is a contractual obligation. I also agree on behalf of the company to submit a certified copy of payroll records to the Division of Labor Services on a monthly basis.

_____

Contractor's Name

_____

Name of person who prepared this Employment Report Title

_____

Name of official authorized to sign on behalf of the contractor Title

_____

Telephone Number

_____

Signature of authorized official Date

If contractors are found to be underutilizing minorities and females in any given trade based on Chapter 56 Section 3H, the Division of Labor Services reserves the right to request the contractor's workforce data and to implement an employment program.

Contractors who fail to comply with the above mentioned requirements or are found to be in noncompliance may be subject to the withholding of final payment.

Willful or fraudulent falsifications of any data or information submitted herewith may result in the termination of the contract between the City and the bidder or contractor and in disapproval of future contracts for a period of up to five years. Further, such falsification may result in civil and/and or criminal prosecution.

To the extent permitted by law and consistent with the proper discharge of DLS' responsibilities under Charter Chapter 56 of the City Charter and Executive Order No. 50 (1980) and the implementing Rules and Regulations, all information provided by a contractor to DLS shall be confidential.

Only original signatures accepted.

Sworn to before me this _____ day of _____ 20 _____

_____

Notary Public Authorized Signature Date

FOR OFFICIAL USE ONLY: File No._____

FORM A. CONTRACT BID INFORMATION: USE OF SUBCONTRACTORS/TRADES

1. Do you plan to subcontractor work on this contract? Yes___ No___

2. If yes, complete the chart below.

NOTE: All proposed subcontractors with a subcontract in excess of $750,000 must complete an Employment Report for review and approval before the contract may be awarded and work commences.

SUBCONTRACTOR'S NAME*	OWNERSHIP (ENTER APPROPRIATE CODE LETTERS BELOW)	WORK TO BE PERFORMED BY SUBCONTRACTOR	TRADE PROJECTED FOR USE BY SUBCONTRACTOR	PROJECTED DOLLAR VALUE OF SUBCONTRACT

***If subcontractor is presently unknown, please enter the trade (craft name).**

OWNERSHIP CODES
- W: White
- B: Black
- H: Hispanic
- A: Asian
- N: Native American
- F: Female

FOR OFFICIAL USE ONLY: File No._____

FORM B: PROJECTED WORKFORCE

TRADE CLASSIFICATION CODES

(J) Journeylevel Workers
(H) Helper
(TOT) Total by Column
(A) Apprentice
(TRN) Trainee

For each trade to be engaged by your company for this project, enter the projected workforce for Males and Females by trade classification on the charts below.

Trade: _____

Union Affiliation, if applicable _____

Total (Col. #1-10): _____

Total Minority, Male & Female (Col. #2,3,4,5,7,8,9, & 10): _____

Total Female (Col. #6 – 10): _____

	MALES					FEMALES				
	(1) White Non Hisp.	(2) Black Non Hisp.	(3) Hisp.	(4) Asian	(5) Native Amer.	(6) White Non Hisp.	(7) Black Non Hisp.	(8) Hisp.	(9) Asian	(10) Native Amer.
J										
H										
A										
TRN										
TOT										

What are the recruitment sources for you projected hires (i.e., unions, government employment office, job tap center, community outreach)?

_____

_____

FOR OFFICE USE ONLY: File No._____

FORM B: PROJECTED WORKFORCE

Trade: _____

Union Affiliation, if applicable _____

Total (Col. #1-10): _____

Total Minority, Male & Female (Col. #2,3,4,5,7,8,9, & 10): _____

Total Female (Col. #6 – 10): _____

	MALES					FEMALES				
	(1) White Non Hisp.	(2) Black Non Hisp.	(3) Hisp.	(4) Asian	(5) Native Amer.	(6) White Non Hisp.	(7) Black Non Hisp.	(8) Hisp.	(9) Asian	(10) Native Amer.
J										
H										
A										
TRN										
TOT										

What are the recruitment sources for you projected hires (i.e., unions, government employment office, job tap center, community outreach)?

_____

_____

FOR OFFICIAL USE ONLY: File No._____

FORM C: CURRENT WORKFORCE

TRADE CLASSIFICATION CODES

(J) Journeylevel Workers
(H) Helper
(TOT) Total by Column
(A) Apprentice
(TRN) Trainee

For each trade currently engaged by your company for all work performed in New York City, enter the current workforce for Males and Females by trade classification on the charts below.

Trade: _____

Union Affiliation, if applicable _____

Total (Col. #1-10): _____

Total Minority, Male & Female (Col. #2,3,4,5,7,8,9, & 10): _____

Total Female (Col. #6 – 10): _____

	MALES					FEMALES				
	(1) White Non Hisp.	(2) Black Non Hisp.	(3) Hisp.	(4) Asian	(5) Native Amer.	(6) White Non Hisp.	(7) Black Non Hisp.	(8) Hisp.	(9) Asian	(10) Native Amer.
J										
H										
A										
TRN										
TOT										

What are the recruitment sources for you projected hires (i.e., unions, government employment office, job tap center, community outreach)?

_____

_____

FOR OFFICE USE ONLY: File No._____

FORM C: CURRENT WORKFORCE

Trade:

_____

Union Affiliation, if applicable

_____

Total (Col. #1-10):

_____

Total Minority, Male & Female
(Col. #2,3,4,5,7,8,9, & 10):

_____

Total Female
(Col. #6 – 10):

_____

	MALES					FEMALES				
	(1) White Non Hisp.	(2) Black Non Hisp.	(3) Hisp.	(4) Asian	(5) Native Amer.	(6) White Non Hisp.	(7) Black Non Hisp.	(8) Hisp.	(9) Asian	(10) Native Amer.
J										
H										
A										
TRN										
TOT										

What are the recruitment sources for you projected hires (i.e., unions, government employment office, job tap center, community outreach)?

_____

_____

(NO TEXT ON THIS PAGE)

The City of New York Department of Small Business Services
Division of Labor Services Contract Compliance Unit
110 William Street, New York, New York 10038
Phone: (212) 513 - 6323 Fax: (212) 618-8879

Date _____ File Number _____

LESS THAN $750,000 SUBCONTRACT CERTIFICATE
(CITY, STATE AND ICIP ONLY)

Are you currently certified as one of the following? Please check yes or no:

MBE Yes ___No ___ WBE Yes ___No ___ LBE Yes ___No ___

DBE Yes___No___ EBE Yes ___ No ___

If you are certified as an MBE, WBE, LBE, EBE or DBE, what city/state agency are you certified with?

_____

Please check one of the following if your firm would like information on how to certify with the City of New York as a:

___Minority Owned Business Enterprise ___Locally based Business Enterprise

___Women Owned Business Enterprise ___Emerging Business Enterprise

___Disadvantaged Business Enterprise

_____
Company Name Employer Identification Number or Federal Tax I.D

_____
Company Address and Zip Code

_____
Contact Person (First Name, Last Name) Telephone Number

_____
Fax Number E-mail Address

Description and location of proposed subcontract:_____
_____
_____

Are you a Union contractor? Yes ____ No ____ If yes, please list which local(s) you affiliated with

_____

Are you a Veteran owned company? Yes ____ No ____

_____ _____
Procurement Identification Number (PIN) Contract Registration Number (CT#)
(City contracts only) (City contracts only)

Revised 8/13
FOR OFFICIAL USE ONLY: File No._____

Block and Lot Number
(ICIP projects only)

Contract Amount

I, (print name of authorized official signing)_____ hereby certify that I am authorized by the above-named subcontractor to certify that said subcontractor's proposed contract with the above named owner or City agency is less than $750,000. This affirmation is made in accordance with NYC Charter Chapter 56, Executive Order No. 50 (1980) and the implementing Rules.

Willful or fraudulent falsifications of any data or information submitted herewith may result in the termination of the contract between the City and the bidder or contractor and in disapproval of future contracts for a period of up to five years. Further, such falsification may result in civil and/and or criminal prosecution.

Signature of authorized official

Date

Only original signatures accepted.

Sworn to before me this _____ day of _____ 20 _____

Notary Public

Authorized Signature

Date

FOR OFFICIAL USE ONLY: File No._____

CITY OF NEW YORK
DEPARTMENT OF DESIGN AND CONSTRUCTION
DIVISION OF INFRASTRUCTURE

ADDENDA CONTROL SHEET

BID OPENING DATE: MAY 3, 2016

PROJECT NO.: QED1014

TITLE: REHABILITATION OF EXISTING TRUNK WATER MAINS IN CRESCENT STREET, ETC

ADDENDA ISSUED	No. OF DRAWINGS	DATE
#1: Additional Amendments		04/11/2016

ATTACH TO CONTRACT DOCUMENTS

THE CITY OF NEW YORK
DEPARTMENT OF DESIGN AND CONSTRUCTION
INFRASTRUCTURE DIVISION
BUREAU OF DESIGN

PROJECT ID: QED1014

REHABILITATION OF EXISTING TRUNK WATER MAINS IN CRESCENT STREET FROM 34TH AVENUE TO 31ST AVENUE; 31ST AVENUE FROM CRESCENT STREET TO 41ST STREET; AND 41ST STREET FROM 31ST AVENUE TO 25TH AVENUE

INCLUDING DISTRIBUTION WATER MAIN, SEWER AND TRAFFIC SIGNAL WORK

Together With All Work Incidental Thereto

BOROUGH OF QUEENS

ADDENDUM NO. 1

DATED: April 11, 2016

This Addendum is issued for the purpose of amending the requirements of the contract documents and is hereby made part of said contract documents to the same extent as if it was originally included therein.

(1) **Refer** to the Bid and Contract Documents, VOLUME 1 OF 3, Page A-1, Attachment 1 - Bid Information;
Change the dates shown for Submission of Bids To: and for Bid Opening: from "April 15, 2016" to read "May 3, 2016."

(2) **Refer** to the Bid and Contract Documents, VOLUME 1 OF 3, Page 13, Schedule B - MWBE;
Change the dates shown for Bid/Proposal Response Date: from "April 15" to read "May 3, 2016."

(3) **Refer** to the Bid and Contract Documents, VOLUME 1 OF 3, Page 20, APPRENTICE PROGRAM QUESTIONNAIRE;
Change the Project ID from "SER200245" to read "QED1014".

By signing in the space provided below, the bidder acknowledges receipt of the one (1) page of this Addendum.

THIS ADDENDUM MUST BE SIGNED BY ALL BIDDERS AND ATTACHED TO THEIR BIDS.

HALCYON CONSTRUCTION CORP.
65 MARBLE AVENUE
PLEASANTVILLE, NEW YORK 10570

Name of Bidder

By:

G. Saini

GURDIP SAINI, P.E.
Associate Commissioner/Design I

CITY OF NEW YORK
DEPARTMENT OF DESIGN AND CONSTRUCTION
DIVISION OF INFRASTRUCTURE

ADDENDA CONTROL SHEET

BID OPENING DATE: MAY 17, 2016

PROJECT NO.: QED1014

TITLE: REHABILITATION OF EXISTING TRUNK WATER MAINS IN CRESCENT STREET, ETC

ADDENDA ISSUED	No. OF DRAWINGS	DATE
#1: Additional Amendments		04/11/2016
#2: Additional Amendments		04/28/2016

ATTACH TO CONTRACT DOCUMENTS

THE CITY OF NEW YORK
DEPARTMENT OF DESIGN AND CONSTRUCTION
INFRASTRUCTURE DIVISION
BUREAU OF DESIGN

PROJECT ID: QED1014

REHABILITATION OF EXISTING TRUNK WATER MAINS IN CRESCENT STREET FROM 34TH AVENUE TO 31ST AVENUE; 31ST AVENUE FROM CRESCENT STREET TO 41ST STREET; AND 41ST STREET FROM 31ST AVENUE TO 25TH AVENUE

INCLUDING DISTRIBUTION WATER MAIN, SEWER AND TRAFFIC SIGNAL WORK

Together With All Work Incidental Thereto

BOROUGH OF QUEENS

ADDENDUM NO. 2

DATED: April 28, 2016

This Addendum is issued for the purpose of amending the requirements of the contract documents and is hereby made part of said contract documents to the same extent as if it was originally included therein.

(1) **Refer** to the Bid and Contract Documents, VOLUME 1 OF 3, Page A-1, Attachment 1 - Bid Information;
Change the dates shown for Submission of Bids To: and for Bid Opening: from "May 3, 2016" to read "May 17, 2016."

(2) **Refer** to the Bid and Contract Documents, VOLUME 1 OF 3, Page 13, Schedule B - MWBE;
Change the dates shown for Bid/Proposal Response Date: from "May 3, 2016" to read "May 17, 2016."

By signing in the space provided below, the bidder acknowledges receipt of the one (1) page of this Addendum.

THIS ADDENDUM MUST BE SIGNED BY ALL BIDDERS AND ATTACHED TO THEIR BIDS.

for P. Shaw
GURDIP SAINI, P.E.
Associate Commissioner/Design I

Name of Bidder HALCYON CONSTRUCTION CORP.

By: 65 MARBLE AVENUE
PLEASANTVILLE, NEW YORK 10570

CITY OF NEW YORK
DEPARTMENT OF DESIGN AND CONSTRUCTION
DIVISION OF INFRASTRUCTURE

ADDENDA CONTROL SHEET

BID OPENING DATE: JUNE 2, 2016

PROJECT NO.: QED1014

TITLE: REHABILITATION OF EXISTING TRUNK WATER MAINS IN CRESCENT STREET, ETC

ADDENDA ISSUED	No. OF DRAWINGS	DATE
#1: Additional Amendments		04/11/2016
#2: Additional Amendments		04/28/2016
#3: Additional Amendments	18	05/10/2016

Question 28: Indicate whether in the past three (3) years complaints have been filed with a court of law or administrative agency, naming your company as a defendant (or respondent) in a complaint alleging violation of any anti-discrimination or affirmative action laws. If yes, develop and submit a log to show, for each administrative/and or judicial action filed, the following information:

1. Name(s) of complainant(s)	2. Administrative agency or court in which action was filed	3. Nature of the complaint(s)	4. Current status	5. If not pending, the complaint's disposition

Question 29: Identify each job for which a physical qualification exists. Identify and explain the physical qualification(s) for each stated job. Submit job descriptions for each job and the reasons for the qualifications.

Question 30: Identify each job for which there exists any qualification related to age, race, color, national origin, sex, creed, disability, marital status, sexual orientation or citizenship status. Identify and explain the specific related qualification for each job stated. Submit job descriptions for each job and the reasons for the qualifications.

PART III: CONTRACT BID INFORMATION AND PROJECTED AND CURRENT WORKFORCE FORMS

FORM A: CONTRACT BID INFORMATION – USE OF SUBCONTRACTORS/TRADES

Your projections for the utilization of subcontractors on the proposed contract are to be provided in this section. A chart has been provided for the identification of subcontractors. Information is to be provided to the extent known at the time the ER is filed for review by DLS. If the subcontractor's name is unknown, then write "unknown". Under "ownership", enter the appropriate race/ethnic and gender code. If the contract is federally funded or assisted and the subcontractor is being utilized in accordance with applicable federal requirements with respect to Minority Business Enterprise or Woman Business Enterprise requirements, enter the appropriate code. This will also apply to state funded contracts with similar requirements for minority and female owned businesses.

FORM B: PROJECTED WORKFORCE FOR WORK TO BE PERFORMED ON THIS PROJECT

For each trade to be engaged by your company for this project, enter the projected workforce for Males and Females by trade classification in the charts provided.

FORM C: CURRENT WORKFORCE FOR WORK TO BE PERFORMED ON THIS PROJECT

For each trade *currently* engaged by your company for all work performed in NYC, enter the current workforce for Males and Females by trade classification in the charts provided.

SIGNATURE PAGE

The signatory of this Employment Report and all other documents submitted to DLS must be an official authorized to enter into a binding legal agreement. The signature page must be completed in its entirety and notarized. Only original signatures will be accepted.

ATTACH TO CONTRACT DOCUMENTS

THE CITY OF NEW YORK
DEPARTMENT OF DESIGN AND CONSTRUCTION
INFRASTRUCTURE DIVISION
BUREAU OF DESIGN

PROJECT ID: QED1014

REHABILITATION OF EXISTING TRUNK WATER MAINS IN CRESCENT STREET FROM 34TH AVENUE TO 31ST AVENUE; 31ST AVENUE FROM CRESCENT STREET TO 41ST STREET; AND 41ST STREET FROM 31ST AVENUE TO 25TH AVENUE

INCLUDING DISTRIBUTION WATER MAIN, SEWER AND TRAFFIC SIGNAL WORK

Together With All Work Incidental Thereto

BOROUGH OF QUEENS

ADDENDUM NO. 3

DATED: May 10, 2016

This Addendum is issued for the purpose of amending the requirements of the contract documents and is hereby made part of said contract documents to the same extent as if it was originally included therein.

(1) **Refer** to the Bid and Contract Documents, VOLUME 1 OF 3, Page A-1, Attachment 1 - Bid Information;
Change the dates shown for Submission of Bids To: and for Bid Opening: from "May 17, 2016" to read "June 2, 2016."

(2) **Refer** to the Bid and Contract Documents, VOLUME 1 OF 3, Page B-1, NOTICE TO BIDDERS;
Add the following note:

"Items listed as "67.11" in this Bid Schedule shall comply with the requirements of Addendum No. 4 dated May 10, 2016."

(3) **Refer** to the Bid and Contract Documents, VOLUME 1 OF 3, BID SCHEDULE, pages B-3 to B-40;
Delete all pages in their entirety;
Substitute attached revised pages B-3 (REVISION #1) to B-41 (REVISION #1).

(4) **Refer** to the Bid and Contract Documents, VOLUME 1 OF 3, Page 13, Schedule B - MWBE;
Delete Page 13 in its entirety;
Substitute with attached revised Page 13-R.

(5) **Refer** to the Bid and Contract Documents, VOLUME 3 OF 3, SEWER AND WATER MAIN REVISIONS TO SPECIFICATIONS, NOTICE TO BIDDERS, page SW-2;
Add the following notes:

"(14) **INTENT AND HISTORY OF PROJECT:**

It is the intent of this project to rehabilitate the existing 60 inch steel trunk water main in Crescent Street from 31st Avenue to 34th Avenue; 31st Avenue from Crescent Street to 41st Street; and 41st Street from 31st Avenue to 25th Avenue, which was installed in 1988, and has not been in service due to substandard manufacturing of the existing steel pipe.

The 60 inch pipe is to be rehabilitated with new 52 inch steel water main (outside diameter 52 inches) by slip lining method and replaced with new steel pipe per open trench method within the limits as shown on the contract drawings and as ordered by the Engineer. Insertion/ receiving pits shall be utilized in areas where bends cannot be negotiated by sliplining and at connections to Butterfly Valve Chambers. The proposed open cut areas are shown on the contract drawings.

The slip lining method was selected to minimize disturbances and disruptions to the community. Open cut will be used only where necessary. The contractor is encouraged to minimize trenches wherever possible.

The existing trunk mains within the project limits are 72 inches, 60 inches and 48 inches in diameter as noted on the Contract Drawings. There also exists four (4) 48 inch Butterfly Valve and Chambers within the project limits. Two of these valve chambers have a single 48 inch valve and two valve chambers have two 48 inch valves. Their locations are noted on the contract drawings and details of the existing valve installations are included in the Contract Drawings as "Reference Only" sheets BFV1 thru BFV4 attached to Addendum No. 3 dated May 10, 2016. The existing chambers shall remain but the existing valves shall be removed and transported to NYC DEP 3rd Ward Pipe Yard. The existing 6 inch bypass valves removed from the existing Butterfly Valve Chambers shall also be transported to the 3rd Ward Pipe Yard. The valve coatings should be tested for asbestos and, if found, be removed prior to delivery to the yard.

New 48 inch Butterfly Valves with 6 inch bypass valves and the arrangement shall be installed without damaging the existing chambers. New link seals shall be installed and waterproofing will be applied to the exposed sections of the existing chambers as per "NYC DEP Standard Sewer and Water Main Specifications", Section 25.05 "Waterproofing" and as ordered by the Engineer."

(6) **Refer** to the Bid and Contract Documents, VOLUME 3 OF 3, SEWER AND WATER MAIN REVISIONS TO SPECIFICATIONS, Sub-Section 60.61.4 – MATERIALS, Paragraph (A)(2), page SW-11;
Change the text "**For reference of Typical Pipe Push Stops for Liner Pipe see attachment "A" attached to the end of this Addendum**" to read "**For reference of Typical Pipe Push Stops for Liner Pipe see attachment "A" attached to the end of Addendum No. 3 dated May 10, 2016**".

(7) **Refer** to the Contract Drawings, Sheet Nos. 2, 3, 6, 9, 10, 12, 14, and 15 of 15;
Delete these sheets in their entirety;
Substitute with attached revised Sheet Nos. 2R, 3R, 6R, 9R, 10R, 12R, 14R, and 15R of 15.

(8) **Refer** to the Contract Drawings;
Add attached Sheet Nos. BFV 1 to BFV 4, CP1 to CP2, and CPD1 to CPD4;

(9) The Contractor is notified that as part of this contract a "Cathodic Protection (CP) System Survey and Engineering Study of Soil and Stray Currents and Cathodic Protection System Design" has been prepared by the firm of CorrTech, Inc. The Contractor's attention is directed to the Cathodic Protection Design drawings consisting of six (6) sheets that are included in the contract drawings; to the Cathodic Protection (CP) System Survey and Engineering Study of Soil and Stray Currents and Cathodic Protection System Design report that consists of eighteen (18) pages that is attached to the end of this addendum; and to the Quantity and Cost Estimating report consisting of one (1) page that is attached to the end of this Addendum.

(10) Attached to the end of this Addendum, is "Attachment A", details for Typical Pipe Push Stops for Linear Pipe, consisting of one (1) page.

(11) See attached list of QUESTIONS SUBMITTED BY BIDDERS AND RESPONSES PROVIDED BY DDC for additional information.

CITY OF NEW YORK
DEPARTMENT OF DESIGN AND CONSTRUCTION
DIVISION OF INFRASTRUCTURE

ADDENDA CONTROL SHEET

BID OPENING DATE: JUNE 2, 2016

PROJECT NO.: QED1014

TITLE: REHABILITATION OF EXISTING TRUNK WATER MAINS IN CRESCENT STREET, ETC

ADDENDA ISSUED	No. OF DRAWINGS	DATE
#1: Additional Amendments		04/11/2016
#2: Additional Amendments		04/28/2016
#3: Additional Amendments	18	05/10/2016
#4: Additional Amendments		05/10/2016

ATTACH TO CONTRACT DOCUMENTS

THE CITY OF NEW YORK
DEPARTMENT OF DESIGN AND CONSTRUCTION
INFRASTRUCTURE DIVISION
BUREAU OF DESIGN

PROJECT ID: QED1014

REHABILITATION OF EXISTING TRUNK WATER MAINS IN CRESCENT STREET FROM 34TH AVENUE TO 31ST AVENUE; 31ST AVENUE FROM CRESCENT STREET TO 41ST STREET; AND 41ST STREET FROM 31ST AVENUE TO 25TH AVENUE

INCLUDING DISTRIBUTION WATER MAIN, SEWER AND TRAFFIC SIGNAL WORK

Together With All Work Incidental Thereto

BOROUGH OF BROOKLYN

ADDENDUM NO. 4

DATED: May 10, 2016

This Addendum is issued for the purpose of amending the requirements of the contract documents and is hereby made part of said contract documents to the same extent as if it was originally included therein.

Specifications For
Abatement Of Coal Tar Wrap Asbestos Containing Materials
REHABILITATION OF EXISTING TRUNK WATER MAINS IN CRESCENT STREET FROM 34TH AVENUE TO 31ST AVENUE; 31ST AVENUE FROM CRESCENT STREET TO 41ST STREET; AND 41ST STREET FROM 31ST AVENUE TO 25TH AVENUE
QUEENS, NY

Department of Design and Construction

Prepared By:

Bureau of Environmental and Geotechnical Services
30-30 Thomson Avenue, 5th Floor
Long Island City, New York 11101

Revision #: 00 or Final Submission
Date: 10/16/2009

TABLE OF CONTENTS

SECTION 67.11
INCREMENTAL COST FOR ASBESTOS ABATEMENT WORK PERFORMED ON EXISTING STEEL PIPE WATER MAIN TO BE REMOVED

67.11.1 GENERAL

67.11.1.1 DESCRIPTION

(A) The contract documents are as defined in the "Standard Construction Contract". The General Conditions shall apply to all work of this section.

(B) Work specified herein shall be the removal and disposal of water main pipe of the specified diameter covered with Coal Tar Wrap Asbestos-Containing Materials (ACM) and asbestos-contaminated materials from designated areas of the water main replacement on this project.

(C) The phasing and scheduling of work for this project shall be coordinated with and approved by the Engineer. The Engineer will make the final determination on all issues under this contract covered by this specification in coordination with NYC Department of Design and Construction's Bureau of Environmental and Geotechnical Services (BEGS).

67.11.1.2 SCOPE OF WORK

(A) The Contractor is to provide all labor, materials, equipment, services, testing, appurtenances, permits and agreements necessary to perform the work required for the abatement of ACM and removal of pipe covered with asbestos-containing Coal Tar Wrap as required by these contract documents. All work shall be performed in accordance with this specification, EPA regulations, OSHA regulations, New York City Local Law 70, Title 15, Chapter 1 RCNY, New York State Industrial Code 56, NIOSH recommendations, and any other applicable federal, state or local government regulations. Whenever there is a conflict or overlap of the above references the most stringent provisions are applicable.

(B) The intent of this section is to ensure that the Contractor is responsible for the following:

(1) Abatement of all ACM.

(2) Cleaning and decontamination of the entire affected area.

(3) Removal of various sections of pipe in varying lengths, as necessary, that may be required to access ACM in each excavated area. The Contractor shall dispose of all debris associated with such removal activities as ACM waste.

(4) Removal and disposal of all ACM found within these areas such as soil within excavated area, section of pipes, and coal tar wrap, etc.

(5) Provide all scaffolding, platform installation, equipment, tools, transportation and any other equipment required and/or necessary to complete all work described in the contract documents.

(6) The Contractor shall be responsible for and shall include in the Contractor's bid any and all fees or changes imposed by Local, State or Federal Law, Rule or Regulation applicable to the work specified herein, including fees or charges which may be imposed subsequent to the date of the Bid Opening.

(C) The Contractor shall perform the following work as described below and indicated on the drawings. The drawings are only a diagrammatic representation of the work areas and do not constitute the actual quantities of material and or size of the pipe. Contractor is responsible for the confirmation of the actual total quantities of the work to be performed prior to bidding.

WORK AREA EXCAVATION:

Remove and dispose of asbestos-containing coal tar pipe wrap within work area. Asbestos-containing coal tar wrap shall be removed utilizing the approved NYCDEP procedure outlined below. Variance for utilizing this procedure within the work area shall be applied for by the Contractor and approved by the New York City Department of Environmental Protection (NYCDEP) prior to the start of abatement activities. In areas where coal tar wrap and pipe with coating of same are to be removed, the Contractor shall be responsible to remove all coal tar wrap material within the soil below the area where the pipe has to be removed. Repeating this procedure at several locations will not be cause for additional compensation to the Contractor. All piping and associated materials as well as impacted soil shall be disposed of as contaminated waste.

(D) The Contractor's attention is directed to the fact that patents cover certain methods of asbestos abatement indicated in the specifications. To date, patents have been issued with regard to negative pressure enclosures or negative or reduced pressure and glove-bag.

(E) The Contractor shall be solely responsible for and shall hold the City of New York Department of Design and Construction and the City harmless from any and all damages, losses and expenses resulting from any infringement by Contractor of any patent including, but not limited to, the patents described above, used by Contractor during performance of this agreement.

(F) Prior to starting, the Contractor must notify the Commissioner of the City of New York Department of Design and Construction if the Contractor anticipates any difficulty in performing the work as directed and required by these specifications. The Contractor shall be required to attend an on-site job meeting with the Engineer prior to start of work to examine conditions of the site for removal and plan the sequence for removal operations.

(G) The Contractor is responsible for amending the Asbestos Inspection Report (ACP-7) and resubmitting it to the NYCDEP Asbestos Control Program prior to abatement work as per Title 15, Chapter 1 of RCNY for any changes in quantities and/or starting date.

(H) If more than one (1) year has elapsed since the original ACP-7 was submitted to the Department of Environmental Protection, the Contractor is responsible for preparing and submitting a new ACP-7 to the Department of Environmental Protection as well as providing all other notifications to various regulatory agencies as required.

(I) In addition, the Contractor is also responsible for preparing, amending and submitting any Asbestos Variance Applications (ACP-9) that may be required for the completion of the contract or incidental work.

(J) The Contractor is also responsible for preparing and submitting all filings, notifications, etc. required by all City, State and Federal regulatory agencies having jurisdiction.

(K) For coordination with other contractors, see the General Conditions governing all contracts.

(L) Related Asbestos Removal Work Under Other Contracts:

(1) Each contractor shall be responsible for the removal of incidental asbestos not identified in this section and found prior to or during the work.

(2) Incidental asbestos is defined as ACM that is discovered during the course of their work that must be abated to enable contractors to perform the work of their contract.

(M) Work Hours:

(1) The Contractor shall establish the Contractor's work schedule in a way that avoids interference or conflict with the normal activities of the area. Work in the evenings shall be done at no additional cost to the City.

(2) All work shall be done during regular working hours unless the Contractor requests authorization to work in other than regular working hours and such authorization is granted by the Commissioner. (Regular working hours are those during which any given facility in which work is to be done is customarily open and functioning). If such work schedule is authorized by the Commissioner the work shall be done at no additional cost to the City.

(3) The order of phases and start dates associated with each will be determined by the Engineer.

(4) Waste transfer must be approved by the Engineer.

(N) Stages Of Asbestos Removal Work:

The Abatement Contractor or Subcontractor will be required to perform the work and it is the intent of this specification to remove all asbestos-containing and asbestos contaminated materials from the work area. The Contractor is responsible for verifying all quantities of materials listed here and bid accordingly.

(O) Certain equipment in the work area may need to remain operational during removal. Therefore, the removal of ACM from this equipment shall be performed as the last removal activities within the work area. The Contractor shall coordinate the scheduling for the removal of ACM on functioning equipment with the Engineer.

67.11.1.3 SPECIAL EXPERIENCE REQUIREMENTS FOR ASBESTOS ABATEMENT

(A) General: The special experience requirements set forth in Paragraph (B) below apply to the contractor who will be performing the Asbestos Abatement work under this contract. If the bidder intends to perform such work itself, it must demonstrate compliance with the special experience requirements. If the bidder intends to subcontract this work, the proposed subcontractor must demonstrate compliance with the special experience requirements. Once approved, no substitution will be permitted, unless the qualifications of the proposed replacement have been approved in writing in advance by the City.

(1) Evaluation: Compliance with the special experience requirements for Asbestos Abatement must be submitted for evaluation a minimum of thirty (30) days prior to commencement of that phase of work which may require removal coal tar wrap asbestos-containing materials. The Contractor is advised that the Contractor will not be permitted to commence excavation work at the site for that phase of construction which may require possible removal of coal tar wrap asbestos-containing materials, should the Contractor's Asbestos Abatement contractor fail to comply with the special experience requirements. Compliance with the experience requirements set forth herein will be determined solely by the City.

(2) Compliance By The Asbestos Abatement Contractor As An Entity: Compliance with the special experience requirements must be demonstrated by the Asbestos Abatement contractor. The Asbestos Abatement contractor itself must have been in existence as the same entity for the three (3) year period prior to the bid opening. During such period, the bidding entity itself must have achieved compliance with the special experience requirements. The Asbestos Abatement contractor entity may not use or rely on the experience or credentials of any other entity regardless of any relationship such other entity may have to the Asbestos Abatement contractor.

(B) Requirements: The Asbestos Abatement contractor must demonstrate compliance with the special experience requirements set forth in subparagraphs (1) through (5) below. The Asbestos Abatement contractor must submit documentation demonstrating compliance with all listed requirements. Such documentation shall include without limitation, all required licenses, certificates, and documentation.

(1) The Asbestos Abatement contractor must, whether an individual, corporation, partnership, joint venture or other legal entity, demonstrate for the three (3) year period prior to the bid opening,

that it has been licensed by the New York State Department of Labor, as an "Asbestos Contractor".

(2) The Asbestos Abatement contractor must, for the three (3) year period prior to the bid opening, have been in the business of providing asbestos abatement services as a routine part of its daily operations.

(3) The Asbestos Abatement contractor proposing to do asbestos abatement work must be thoroughly experienced in such work and must provide evidence of having successfully performed and completed in a timely fashion at least five (5) asbestos abatement projects of similar size and complexity. The aggregate cost of these projects must be at least $1,000,000 in each of the three (3) years.

(4) For each project submitted to meet the experience requirements set forth above, the Asbestos Abatement contractor must submit the following information for the project: name and location of the project; name title and telephone number of the owner or the owner's representative who is familiar with the Asbestos Abatement contractor's work; brief description of the work completed as a prime or sub-contractor; amount of contract or subcontract; and, the date of completion.

(5) The Asbestos Abatement contractor must demonstrate that it has the financial resources, supervisory personnel and equipment necessary to carry out the work and to comply with the required performance schedule, taking into consideration other business commitments. The Asbestos Abatement contractor must submit such documentation as may be required by the Department of Design and Construction to demonstrate that it has the requisite capacity to perform the required services of this contract.

(C) Throughout the specifications, reference is made to codes and standards which establish qualities and types of workmanship and materials, methods for testing and reporting on the pertinent characteristics thereof to provide materials or workmanship that meet or exceed the specifically named codes or standards where required by these specifications.

(D) Site Investigation: The Contractor shall inspect all the specifications and related drawings, and will investigate and confirm the site conditions affecting the work, including, but not limited to:

(1) Physical considerations and conditions of both the material and structure. These considerations include any obstacles or obstructions encountered in accessing or removing the material.

(2) Handling, storage, transportation and disposal of the material.

(3) Availability of qualified and skilled labor.

(4) Availability of utilities.

(5) Exact quantities of all materials to be disturbed and/or removed.

67.11.1.4 WORK BY OTHERS

The City reserves the right during the term of this contract to have work performed on asbestos abatement projects by other contractors as the situation warrants.

67.11.1.5 DEFINITIONS

(A) General Explanation: Certain terms used in this specification are defined below. Definitions and explanations of this specification are not necessarily complete or exclusive, but are general for the work to the extent they are not stated more explicitly in another element of the contract documents.

(B) Definitions In General Use:

(1) Approve: Where used in conjunction with Engineer's response to submittals, requests, applications, inquiries, reports and claims by Contractor, the meaning of term "approved" will be held to limitations of Engineer's responsibilities and duties as specified in contract documents. In no case will "approval" by Engineer be interpreted as a release of Contractor from responsibilities to fulfill requirements of contract documents.

(2) Directed, Requested, Etc.: Where not otherwise explained, terms such as "directed," "requested," "authorized," "selected," "approved," "required," "accepted," and "permitted" mean "directed by Engineer," "requested by Engineer," and similar phrases. However, no such implied meaning will be interpreted to extend Engineer's responsibility into Contractor's responsibility for construction supervision.

(3) Furnish: Except as otherwise defined in greater detail, term "furnish" is used to mean supply and deliver to project site, ready for unloading, unpacking, assembly, installation, etc., as applicable in each instance.

(4) Indicated: The term "indicated" is a cross-reference to graphic representations, notes or schedules on drawings, to other paragraphs or schedules in the specifications, and to similar means of recording requirements in contract documents. Where terms such as "shown," "noted," "scheduled," and "specified" are used in lieu of "indicated," it is for purpose of helping reader locate cross-reference, and no limitation of location is intended except as specifically noted.

(5) Install: Except as otherwise defined in greater detail, term "install" is used to describe operations at project site including unloading, unpacking, assembly, erection, placing, anchoring, applying, working to dimension, finishing, curing, protecting, cleaning and similar operations, as applicable in each instance.

(6) Installer: The term "installer" is defined as the entity (person or firm) engaged by Contractor, or its subcontractor or sub-subcontractor for performance of a particular unit of work at project site, including installation, erection, application and similar required operations. It is a general requirement that such entities (installers) be expert in operations they are engaged to perform.

(7) Provide: Except as otherwise defined in greater detail, term "provide" means furnish and install, complete and ready for intended use, as applicable in each instance.

(8) Testing Laboratory: The term "Testing Laboratory" is defined as an entity engaged by the City to perform specific inspections or tests of the work, either at project site or elsewhere; and to report and (if required) interpret results of those inspections or tests.

(C) Definitions Relative To Asbestos Abatement:

(1) Abatement: Procedures physically taken to control fiber release from ACM. This includes removal, encapsulation, enclosure, and repair.

(2) Aggressive Sampling: Method of sampling in which the individual collecting the air sample creates activity by the use of mechanical equipment during the sampling period to stir up settled dust and simulate activity in that area of the building.

(3) AIHA: American Industrial Hygiene Association.

(4) Airlock: System for permitting entrance and exit while restricting air movement between a contaminated area and an uncontaminated area. It consists of two (2) curtained doorways separated by a distance of at least three (3) feet such that one passes through one doorway into the airlock, allowing the doorway sheeting to overlap and close off the opening before proceeding through the second doorway, thereby preventing flow-through contamination.

(5) Air Sampling: Process of measuring the fiber content of a known volume of air collected during a specific period. The procedure utilized for asbestos follows the NIOSH Standard Analytical

Method 7400, or the provisional transmission electron microscopy methods developed by the US EPA which is utilized for lower detection levels and specific fiber identification.

(6) Amended Water: Water to which a surfactant has been added.

(7) ANSI: American National Standards Institute.

(8) Area Air Sampling: Any form of air sampling or monitoring where the sampling device is placed at some stationary location.

(9) Asbestos: Any hydrated mineral silicate separable into commercially usable fibers, including but not limited to chrysotile (serpentine), amosite (cumingtonite-grunerite), crocidolite (riebeckite), tremolite, anthophyllite and actinolite.

(10)Asbestos-Containing Material (ACM): Asbestos or any material containing more than one percent (1%) asbestos.

(11)Asbestos-Containing Waste Material: ACM or asbestos-contaminated objects requiring disposal.

(12)Asbestos Handler: Individual who disturbs, removes, repairs, or encloses friable asbestos material. This individual shall have completed approved training course(s) and be in possession of certification issued by NYCDEP and NYSDOL.

(13)Asbestos Handler Supervisor: Individual who supervises the handlers during an asbestos project and ensures that proper asbestos abatement procedures as well as individual safety procedures are being adhered to. This individual shall have completed approved training course(s) and be in possession of certification issued by NYCDEP and NYSDOL.

(14)Asbestos Handling Certificate: Certificate(s) issued to individuals who have met the criteria established by NYCDEP and/or NYSDOL.

(15)Asbestos Inspection Report: A report on the condition of a building or structure in relation to the presence and condition of asbestos therein.

(16)Asbestos Investigator: An individual certified by NYCDEP as having successfully demonstrated the ability to identify the presence of and evaluate the condition of asbestos in a building or structure.

(17)Asbestos Project: Any form of work performed in connection with the alteration, innovation, modification, or demolition of a building or structure which will disturb (e.g. remove, enclose, encapsulate) more than three (3) linear feet or more than three (3) square feet of friable ACM.

(18)ASTM: The American Society for Testing and Materials International.

(19)Authorized Visitor: Authorized visitor shall mean the Commissioner and the Commissioner's representative, and any representative of a regulatory or other agency having jurisdiction over the project.

(20)Certified Industrial Hygienist (CIH): Individual with a minimum of five (5) years experience as an industrial hygienist and who has successfully completed both levels of the examination administered by the American Board of Industrial Hygiene and who is currently certified by that board.

(21)Certified Safety Professional (CSP): Individual having a bachelor's degree from an accredited college or university and a minimum of four (4) years experience as a safety professional and who has successfully completed both levels of the examination administered by the Board of Certified Safety Professionals and who is currently certified by that board.

(22)City: Shall mean the City of New York.

(23)Clean Room: An uncontaminated area or room that is part of worker decontamination enclosure system with provisions for storage of workers' street clothes and protective equipment.

(24)Clearance Air Monitoring: Employment of aggressive sampling techniques with a volume of air collected to determine the airborne concentration of residual fibers and shall be performed as the final abatement activity.

(25)Commissioner: Shall mean the head of the Agency that has entered into this contract or a duly authorized representative.

(26)Competent Person: Shall mean the designated person as defined in OSHA 29CFR 1926.1101.

(27)Curtained Doorway: Device that consists of at least three (3) overlapping sheets of polyethylene over an existing or temporarily framed doorway. One sheet shall be secured at the top and left side, the second sheet at the top and right side, and the third sheet at the top and left side. All sheets shall have weights attached to the bottom to ensure that the sheets hang straight and maintain a seal over the doorway when not in use.

(28)Decontamination Enclosure System: Series of connected rooms, separated from the work area and from each other by air locks, for the decontamination of workers, materials, waste containers, and equipment.

(29)Encapsulant (Sealant) or Encapsulating Agent: Liquid material which can be applied to ACM and which temporarily controls the possible release of asbestos fibers from the material either by creating a membrane over the surface (bridging encapsulant) or by penetrating into the material and binding its components together (penetrating encapsulant). This may also be used to seal surfaces from which ACM has been removed.

(30)Encapsulation: Coating or spraying of ACM with a sealant.

(31)Enclosure: Construction of airtight walls and/or ceilings between ACM and the facility environment, or around surfaces coated with ACM, or any other appropriate procedure as determined by the NYCDEP which prevents the release of asbestos fibers.

(32)ELAP: Environmental Laboratory Approval Program administered by the New York State Department of Health.

(33)EPA or USEPA: United States Environmental Protection Agency.

(34)Equipment Room: Contaminated area or room that is part of the worker decontamination enclosure system with provisions for the storage of contaminated clothing and equipment.

(35)Fixed Object: Utility or associated piping within the work area that cannot be removed from the work area.

(36)Friable Asbestos Material: Asbestos or any ACM that can be crumbled, pulverized, or reduced to powder when dry, by hand or other mechanical pressure.

(37)Glove-Bag Technique: Method for removing friable ACM from heating, ventilation, and air conditioning (HVAC) ducts, short piping runs, valves, joints, elbows, and other nonplanar surfaces in a noncontained work area. The glove-bag assembly is a manufactured device consisting of a glove-bag (constructed of at least 6-mil transparent polyethylene), two inward-projecting long sleeve gloves, one inward-projecting water wand sleeve, an internal tool pouch, and an attached, labeled receptacle for asbestos waste. The glove-bag is constructed and installed in such a manner that it surrounds the object or area to be decontaminated and contains all asbestos fibers released during the removal process.

(38)HEPA-Filter: High efficiency particulate air filter capable of trapping and retaining 99.97-percent of particles (asbestos fibers) greater than 0.3-micrometers mass median aerodynamic equivalent diameter.

(39)Holding Area: Chamber in the equipment decontamination enclosure located between the washroom and an uncontaminated area.

(40)Homogeneous Work Area: Portion of the work area that contains one type of ACM and/or where one type of abatement is used.

(41)Industrial Hygiene: Science and art devoted to the recognition, evaluation, and control of those environmental factors or stresses, arising in or from the work place, which may cause sickness, impaired health and well being, or significant discomfort and inefficiency among worker or among the citizens of the community.

(42)Industrial Hygienist: Individual having a college or university degree or degrees in Engineering, Chemistry, Physics or Medicine, or related Biological Sciences who, by virtue of special studies and training, has acquired competence in industrial hygiene. Such special studies and training must have been sufficient in all of the above cognate sciences to provide the abilities:

(a) To recognize the environmental factors and to understand their effect on people and their well being; and,

(b) To evaluate, on the basis of experience and with the aid of quantitative measurement techniques, the magnitude of these stresses in terms of ability to impair people's health and well being; and,

(c) To prescribe methods to eliminate, control, or reduce such stresses when necessary to alleviate their efforts.

(43)Large Asbestos Project: Asbestos project involving the disturbances (e.g. removal, enclosure, encapsulation) of 260-linear feet or more of friable ACM or 160-square feet or more of friable ACM.

(44)Major Violation: Any action, on the job performance or lack of performance that may place any individual at risk other than the worker who commits the violation. A major violation is equivalent to two (2) violation points.

(45)Minor Asbestos Project: Project involving the disturbance (e.g. removal, enclosure, encapsulation, repair) of more than three (3) linear feet, but not more than twenty-five (25) linear feet of friable ACM or more than three (3) square feet, but not more than ten (10) square feet of friable ACM.

(46)Minor Violation: Any action, on the job performance or lack of performance that may place the worker at risk. A minor violation is equivalent to one (1) violation point.

(47)Movable Object: Any equipment or utility in the work area that can be removed from the work area.

(48)Negative Air Pressure Equipment: Portable local exhaust system equipped with HEPA filtration. The system shall be capable of creating a negative pressure differential between the outside and inside of the work area.

(49)NESHAPS: National Emission Standards for Hazardous Air Pollutants.

(50)NIOSH: National Institute for Occupational Safety and Health.

(51)NYCDEP: New York City Department of Environmental Protection.

(52)NYSDOL: New York State Department of Labor.

(53)Occupied Area: Area of the work site where abatement is not taking place and where personnel or occupants normally function or where workers are not required to use personal protective equipment.

(54)OSHA: Occupational Safety and Health Administration.

(55)Person: Individual, partnership, company, corporation, association, firm, organization, governmental agency, administration, or the NYCDEP, or any other group of individuals, or any officer or employee thereof.

(56)Personal Air Monitoring: Method used to determine employees' exposure to airborne fibers. The sample is collected outside the respirator in the worker's breathing zone.

(57)Personal Protective Equipment (PPE): Appropriate protective clothing, gloves, eye protection, footwear, and head gear.

(58)Physician: Person licensed or otherwise authorized under Article 131 Section 65.22 of the New York State Education Law.

(59)Plasticize: Cover floors and walls with polyethylene sheeting as herein specified or by using spray plastics as acceptable to the NYCDEP.

(60)Professional Engineer (PE): Individual having, at a minimum, a Bachelor's Degree in Engineering from an accredited college or university with four (4) years acceptable experience as an engineer and who has successfully completed both levels of the Professional Engineers Examination administered by the State of New York Department of Education, Division of Professional Licensing.

(61)Qualitative Fit Test: Individual test subject's responding (either voluntarily or involuntarily) to a chemical challenge outside the respirator face-piece. Three of the most popular methods include: (1) irritant smoke test; (2) odorous vapor test; and (3) taste test.

(62)Quantitative Fit Test: Exposing the respiratory wearer to a test atmosphere containing an easily detectable, nontoxic aerosol, vapor or gas as the test agent. Instrumentation, which samples the test atmosphere and the air inside the face-piece of the respirator, is used to measure quantitatively the leakage into the respirator. There are a number of test atmospheres, test agents, and exercises to perform during the test.

(63)Registered Architect (RA): Individual having, at a minimum, a Bachelor's Degree in Architecture from an accredited college or university with three (3) years acceptable experience as an architect and who has successfully completed both levels of the Architects Registration Examination administered by the State of New York Department of Education, Division of Professional Licensing.

(64)Removal: Stripping of any asbestos-containing materials from surfaces or components of a structure or taking out structural components in accordance with 40 CFR 61 Subparts A and M.

(65)Shower Room: Room between the clean room and the equipment room in the worker decontamination enclosure with hot and cold running water controllable at the tap and arranged for complete showering during decontamination.

(66)Small Asbestos Project: Asbestos project involving the disturbance (e.g. removal, enclosure, encapsulation) of more than 25-linear feet and less than 260-linear feet of friable ACM or more than 10-square feet and less than 160-square feet of friable ACM.

(67)Staging Area: Work area near the waste transfer airlock where containerized asbestos waste has been placed prior to removal from the work area.

(68)Structural Member: Load-supporting member of a facility, such as beams and load-supporting walls, or any nonload-supporting member, such as ceiling and nonload-supporting walls.

(69)Surfactant: Chemical wetting agent added to water to improve penetration.

(70)Visible Emissions: Emissions containing particulate material that are visually detectable without the aid of instruments.

(71)Washroom: Room between the work area and the holding area in the equipment decontamination enclosure system where equipment and waste containers are wet cleaned and/or HEPA-vacuumed prior to disposal.

(72)Wet Cleaning: Removal of asbestos fibers from building surfaces and objects by using cloths, mops, or other cleaning tools which have been dampened with amended water.

(73)Work Area: Designated excavation, spaces, or areas within a trench or structure where asbestos abatement activities take(s) place.

(74)Worker Decontamination Enclosure System: Portion of a decontamination enclosure system designed for controlled passage of workers and authorized visitors, consisting of a clean room, a shower room, and an equipment room separated from each other and from the work area by airlocks and curtained doorways.

(75)Work Site: Area where abatement activity is being performed. May be composed of one or more work areas.

67.11.1.6 STANDARD OPERATING PROCEDURES

(A) Develop and implement a written standard procedure for abatement work to ensure maximum protection and safeguard from asbestos exposure of the workers, visitors, employees, public, and environment.

(B) TELEPHONE PAGING DEVICE:

The Contractor or the Contractor's authorized representative shall, at all times during the normal workday or during periods of overtime work under this contract, carry a digital telephone paging device ("Beeper") and/or cellular telephones which can be activated by a telephone number in the 212 or 646 or 718 or 917 area code. The Contractor shall supply the Department of Design and Construction with the activation number for the device and the Contractor is liable to respond back to the calls from DDC within the next one (1) hour period after the Contractor receives calls from DDC. The cost to the Contractor for this device and all charges accruing thereto is deemed included in the price(s) bid for item(s) labeled, "INCREMENTAL COST FOR ASBESTOS ABATEMENT WORK PERFORMED ON EXISTING STEEL PIPE WATER MAIN TO BE REMOVED, COMPLETE".

(C) The standard operating procedure shall ensure:

(1) Tight security from unauthorized entry into the workspace.

(2) Restriction of Contractor's personnel to the immediate work area and access/egress routes.

(3) Donning of proper protective clothing and respiratory protection prior to entering the work area.

(4) Safe work practices in the work place, including provisions for inter-room communications, exclusion of eating, drinking, smoking, or in any way breaking the respiratory protection.

(5) Proper exit practices from the work space to the outside through the showering and decontamination facilities.

(6) Removing asbestos in ways that minimize release of fibers.

(7) Packing, labeling, loading, transporting, and disposing of contaminated material in a way that minimize exposure and contamination.

(8) Emergency evacuation procedures, for medical or safety situations, to minimize the potential exposure to airborne asbestos fibers for emergency personnel, and building environment.

(9) Safety from accidents in the workspace, especially from electrical shocks, fall hazards associated with scaffolding, slippery surfaces, and entanglements in loose hoses and equipment.

(10) Provisions for effective supervision, air monitoring and personnel monitoring for exposure during the work.

(11) Engineering systems that minimize exposure to fibers within the workspace.

(D) Provide an Asbestos Handler Supervisor to provide continuous supervision of all work, and to be responsible for the following:

(1) Ensure that individuals are using proper personal protective equipment and are trained in its use.

(2) Maintain entry log records and ensure that they are recorded in accordance with the provisions of Title 15, Chapter 1 of RCNY.

(3) Surveillance of the work areas at a minimum of once per work shift or as required by Title 15, Chapter 1 of RCNY, to ensure that the workers personal protective equipment is not torn or ripped and that respiratory protection is worn at all times.

(4) Ensure that sufficient personal protective equipment is stored in the clean room.

(5) Take precautions to prevent heat stress. Precautions include, but are not limited to, selecting lightweight protective clothing, reducing the work rate, and providing adequate fluid breaks.

(E) ENGINEERING CONTROLS:

(1) The 8-hour time weighted average airborne concentration of fibers to which any passerby may be exposed shall not exceed 0.01-fibers per cubic centimeter of air when fibers have a physical dimension longer than 5-micrometers as determined by the method prescribed in these specifications.

(2) All large asbestos projects shall utilize negative pressure ventilation equipment.

(3) The negative pressure ventilation equipment shall operate continuously, 24-hours a day, from the establishment of isolation barriers through successful clearance air monitoring. If such equipment shuts off, adjacent areas shall be monitored for asbestos fibers.

(4) On loss of negative pressure or electric power to the negative pressure ventilating units, abatement shall stop immediately and shall not resume until power is restored and negative pressure ventilation equipment is operating again.

(5) Negative pressure ventilation equipment shall be exhausted to the outside of the tent enclosure away from passer-by and/or sidewalks.

(a) At no time shall the negative pressure ventilation unit exhaust with 40-feet of a receptor or adversely affect the intake ports, louvers, or entrances for the adjacent buildings.

(b) Heavy duty ducting of equivalent, or larger, shape and dimension as that of the negative pressure ventilation exhaust port shall be used to exhaust to the structure.

(c) All ducting shall be sealed and braced or supported to maintain airtight joints.

(6) Where ducting to the outside is not possible, a second negative pressure ventilation unit compatible with the primary unit's capacity shall be connected in series. The area receiving the exhaust shall have sufficient, nonrecycling exhaust capacity to the outside of the structure.

(7) In the event that there is a failure of the containment system or a breach in the Isolation Barriers, all abatement work will cease and the Contractor will immediately correct the condition. Abatement work will not resume until the work area has been smoke tested by the third party laboratory and approved by the Project Monitor.

(F) LOCKDOWN ENCAPSULATION PROCEDURES:

The following procedures shall be followed to seal in nonvisible residue while conducting lockdown encapsulation on all surfaces from which ACM is removed:

(a) Only encapsulants rated as acceptable or marginally acceptable on the basis of Battelle Columbus Laboratory test procedures and rating requirements developed under the 1978 USEPA Contract shall be used for lockdown encapsulation.

(b) The encapsulant solvent or vehicle shall not contain a volatile hydrocarbon unless reviewed and approved by DEP.

(c) Latex paint with solids content greater than 15-percent shall be considered a lockdown sealant for coating all nonmetallic surfaces.

(d) Encapsulants shall be applied using airless spray equipment. Spraying is to occur at the lowest pressure range possible to minimize fiber release from encapsulant impact at the surface. It shall be applied with a consistent horizontal or vertical motion.

67.11.1.7 NOTIFICATIONS, PERMITS, WARNING SIGNS, LABELS, AND POSTERS

(A) Erect bilingual (English-Spanish) warning signs around the excavation and at every point of potential entry from the street level which can be viewed by the public without obstruction, in accordance with OSHA 29 CFR 1926.1101 (K) (Sign Specifications) and Title 15, Chapter 1 of RCNY. The warning signs shall be a bright color so that they will be easily noticeable. The size of the sign and the size of the lettering shall be no less than OSHA requirements.

(B) Provide the required labels for all polyethylene bags and all drums utilized to transport contaminated material to the landfill in accordance with OSHA 29 CFR 1926.1101 (K)(2) and by 49 CFR Parts 171 and 172 of the Department of Transportation regulations.

(C) Provide any other signs, labels, warnings, and posted instructions that are necessary to protect, inform and warn people of the hazard from asbestos exposure. Post in a prominent and convenient place for the workers a copy of the latest applicable regulations from OSHA, EPA, NIOSH, State of New York and New York City and any additional items mandated for posting by the aforementioned regulations.

(D) Furnish all permits, variances and notices required to perform the work.

67.11.1.8 EMERGENCY PRECAUTIONS

(A) Establish emergency exit(s) from the work area. The clean side of all emergency exits shall be equipped with two full sets of protective clothing and respirators at all times.

(B) Notify local medical emergency personnel, both ambulance crews and hospital emergency room staff prior to commencement of abatement operations as to the possibility of having to handle contaminated or injured workmen, and shall be advised on safe decontamination.

(C) Prepare to administer first aid to injured personnel after decontamination. Seriously injured personnel shall be treated immediately or evacuated immediately for decontamination. When an injury occurs, precautions shall be taken to reduce airborne fiber concentrations (i.e. misting of the air with water) until the injured person has been removed from the work area.

(D) Notify, before actual removal of the asbestos material, the local police and fire departments to the danger of entering the excavated area where removal is taking place. Contractor shall make every effort to help these agencies form plans of action should their personnel need to enter the contaminated area.

67.11.1.9 SUBMITTALS

(A) Pre-Construction Submittals:

Attend a pre-construction meeting scheduled by the City of New York Department of Design and Construction. This meeting shall also be attended by a designated representative of the City of New York third party air monitoring firm and the Engineer. At this meeting, the Contractor shall present three (3) copies of the following items, bound and indexed. The detailed plan of action must be submitted at least five (5) days prior to the pre-construction meeting.

(a) Contractor's scope of work, work plan and schedule.

(b) Notifications to Government Agencies.

(c) Copies of permits, clearance and licenses if required.

(d) Schedules: The Contractor shall provide to the Engineer a copy of the following schedules for approval. Once approved, schedules shall be maintained and updated as received. The Contractor shall post a copy of all schedules at the site:

(1) A construction schedule stating critical dates of the project including, but not limited to, mobilization, work area preparation, demolition, gross removal, fine cleaning, encapsulation, inspections, clearance monitoring, and phase of refinishing and final inspections. The schedule shall be updated biweekly, at a minimum.

(2) A schedule of staffing stating number of workers per shift per activity, name and number of supervisor(s) per shift, shifts per day, and total days to be worked.

(3) Submit all changes in schedule or staffing to the Engineer prior to implementation.

(4) A schedule of equipment to be used including numbers and types of all major equipment such as HEPA Air Filtration Units, HEPA-vacuums, airless sprayers, Water Atomizing Devices and Type "C" compressors.

(e) A written plan and shop drawings for preparation of work site and decontamination chamber.

(f) Description of protective clothing and approved respirator to be used, make, model, NIOSH approval numbers.

(g) Delineation of responsibility of work site supervision, including competent person, with names, resumes, and home telephone numbers.

(h) Explanation of decontamination sequence and isolation techniques.

(i) Description of specific equipment to be utilized, including make and model number of air filtration devices, vacuums, sprayers, etc.

(j) Description of any prepared methods, procedures, techniques, or equipment other than those specified in the contract documents.

(k) Explanation of the handling of contaminated wastes including EPA and NYCDEP identification numbers of Waste Hauler.

(l) Description of the final clean-up procedures to be used.

(m) Name and qualifications of Contractor's testing laboratory including AIHA accreditation, and proof of NIOSH PAT and NIST/NVLAP Bulk Quality Assurance Proficiency of OSHA samples for approval by the City of New York Department of Design and Construction.

(n) Written description of emergency procedures to be followed in case of injury or fire. This section must include evacuation procedures, source of medical assistance (name and telephone number) and procedures to be used for access by medical personnel (examples: first aid squad and physician). NOTE: Necessary Emergency Procedures Shall Take Priority Over All Other Requirements Of These Specifications.

(o) Material Safety Data Sheets (MSDS) for encapsulants, sealants, firestopping foam, cleaners/disinfectants, spray adhesive and any and all potentially hazardous materials that may be employed on the project. No work involving the aforementioned will be allowed to proceed until MSDS are reviewed.

(p) Worker Training And Medical Surveillance: Contractor shall submit a list of the persons who will be employed by The Contractor and the Contractor's Subcontractors in the removal work. Present evidence that workers have received proper training required by the regulations and the medical examinations required by OSHA 29 CFR 1926.1101.

(q) Logs: Specimen copies of daily progress log, visitor's log, and disposal log.

(1) The Contractor shall provide a permanently bound log book of minimum 8-1/2" x 11" size at the entrance to the Worker and Waste Decontamination enclosure system as hereinafter specified. Log book shall contain on title page the project name, name, address and phone number of Environmental Control Representative; name, address and phone number of Abatement Contractor; name, address and phone number of Contractor and City's air testing entity; and, emergency numbers including, but not limited to local Fire/Rescue Department. Log book shall contain a list of personnel approved by the laboratory for entry into the work area.

(2) All entries into the log shall be made in nonwashable, permanent ink and such pen shall be strung to or otherwise attached to the log to prevent removal from the log-in area. Under no circumstances shall pencil entries be permitted. Any significant events occurring during the abatement project shall be entered into the log. Upon completion of the job, the Contractor shall submit the logbook containing a day-to-day record of personnel log entries countersigned by the Project Monitor everyday.

(r) Worker's Acknowledgments: Submit statements signed by each employee that the employee has received training in the proper handling of ACM understands the health implications and risks involved; and understands the use and limitations of the respiratory equipment to be used.

(B) Submit copies of the following items to the Project Monitor during the work:

(1) Security and safety logs showing names of person entering workspace, date and time of entry and exit, record of any accident, emergency evacuation, and any other safety and/or health incident.

(2) Progress logs showing the number of workers, supervisors, hours of work and tasks completed shall be submitted daily to the Engineer.

(3) Contractor's current work progress shall be submitted for review by the Engineer at weekly progress meetings.

(4) All Contractors' air monitoring and inspection results.

(C) Project Closeout Submittals:

Upon completion of the project and as a condition of acceptance, the Contractor shall present two (2) copies of the following items, bound and indexed:

(1) Lien Waivers from Contractor, Subcontractors and Suppliers,

(2) Daily OSHA air monitoring results,

(3) All Waste Manifests (Asbestos and Construction Debris), seals and disposal logs,

(4) Field Sign-In/Sign-Out Logs for every shift,

(5) A Letter of Compliance stating that all the work on this project was performed in accordance with the specifications and all applicable Federal, State and Local regulations,

(6) All Warranties as stated in the specifications,

(7) Fully executed disposal certificates and transportation manifest.

67.11.1.10 QUALITY ASSURANCE

(A) All work required for the completion of this project or called for in this specification must be executed in a workmanlike manner by using the appropriate methods established by regulatory requirements and/or industrial standards. All workmanship or work methods are subject to review and acceptance by the Engineer. Throughout the specification, reference is made to codes and standards which establish qualities, levels or types of workmanship which will be considered acceptable. It is the Abatement Contractor's responsibility to comply with these codes and standards during the execution of this work.

(B) All materials and equipment required or consumed during the work of this contract must meet the minimum acceptable criteria established by codes and standards referenced elsewhere in this specification. Materials and equipment must be submitted for prior approval as part of the Contractor's "Shop Drawings".

(C) It is the Abatement Contractor's responsibility, when so required by the specification or upon written request from the Commissioner or the Commissioner's representative to furnish all required proof that workmanship, materials and/or equipment meet or exceed the codes and standards referenced. Such proof shall be in the form requested, typically a certified report or test conducted by a testing entity approved for that purpose by DDC.

(D) The Contractor shall furnish proof that employees working under the Contractor's supervision have had instruction on the dangers of asbestos exposure, on respirator use, decontamination, and OSHA

regulations. This proof shall be in the form of a notarized affidavit to the effect that the above requirements have been satisfied.

(E) The Contractor will have at all times in the Contractor's possession and in view at the job site the OSHA regulations 29 CFR 1910.1001, and 1926.1101 Asbestos, and Environmental Protection Agency 40 CFR, Part 61, subpart B: National Emission Standard for asbestos, asbestos stripping, work practices and disposal of asbestos waste. The Contractor shall also have one copy of NYC Title 15, Chapter 1 of RCNY and NYS DOL ICR 56 at the job site at all times.

(F) Familiarity With Pertinent Codes And Standards: In procuring all items used in this work, it is the Contractor's responsibility to verify the detailed requirements of the specifically named codes and standards and to verify that the items procured for use in this work meet or exceed the specified requirements, and are suitable for their intended use.

(G) Rejection Of Noncomplying Items: The Commissioner reserves the right to reject items incorporated into the work that fail to meet the specified minimum requirements. The Commissioner further reserves the right, and without prejudice to other recourse that maybe taken, to accept noncomplying items subject to an adjustment in the contract amount as approved by the City.

(H) Applicable Regulations, Codes And Standards: Applicable standards listed in these specifications include, but are not necessarily limited to, standards promulgated by the following agencies and organizations:

(1) United States Environmental Protection Agency (EPA or USEPA)
Region II
Asbestos NESHAPS Contact
Air And Waste Management Division
(Air Compliance Branch) - USEPA
290 Broadway, 21st Floor
New York, New York 10007-1866
212-637-3660

(2) Occupational Safety and Health Administration (OSHA)
Region II - Regional Office
201 Varick Street, Room 908
New York, New York 10014
212-337-2378

(3) National Electrical Code (NEC)
See NFPA

(4) National Fire Protection Association (NFPA)
1 Batterymarch Park
Quincy, Massachusetts 02169-7471
617-770-3000

(5) National Institute for Occupational Safety and Health (NIOSH)
Robert A. Taft Laboratory
4676 Columbia Parkway
Mailstop R12 Cincinnati, Ohio 45226
513-841-4428

(6) Department of Health and Mental Hygiene (DOHMH)
Environmental Investigation
125 Worth Street
New York, New York 10013
212-442-3372

(7) American National Standards Institute (ANSI)
(Successor to USASI and ASA)
25 West 43rd Street (between 5th and 6th Avenue), 4th Floor
New York, New York 10036
212-642-4900

(8) American Society for Testing and Materials (ASTM)
100 Bar Harbor Drive
West Conshohocken, Pennsylvania 19428-2959
610-832-9500

(9) New York City Department of Environmental Protection (NYCDEP)
Bureau of Environmental Compliance
Asbestos Control Program
59-17 Junction Boulevard, 8th Floor
Corona, New York 11368
718-595-3682

(10) New York City Department of Sanitation
125 Worth Street, Room 714
New York, New York 10013
212-566-1066

(11) New York State Department of Labor (NYSDOL)
Division Of Safety And Health
Engineering Services Unit
State Office Building Campus
Albany, New York 12240-0010

(I) Post all applicable regulations in a conspicuous place at the job site. Assure that the regulations are not altered, defaced or covered by other materials. One copy of each regulation must also be kept at the Contractor's office.

67.11.1.11 CITY/CONTRACTOR RESPONSIBILITIES

(A) The City will not enter the portions of the excavation, in which work is being performed during the entire asbestos removal operation, including completion of clean up.

(B) The Contractor shall provide a plan for 24-hours job security both for prevention of theft and for barring entry of curious but unprotected personnel into work areas.

(C) The Contractor shall provide own means of power if needed and the City will not be held responsible for the downtime due to faulty Contractor's equipment.

(D) The Contractor shall provide, at Contractor's own expense, all electrical, water, and waste connections, tie-ins, extensions, and construction materials, supplies, etc. At the end of each shift, the Contractor shall disconnect all hoses within the work zone and place in equipment room of the worker decontamination unit. The Contractor shall ensure positive shutoff of all water to work area during nonworking hours.

(E) All temporary facilities required to be installed, shall be subject to the approval of the Commissioner. Prior to starting the work at any site; specify clearly the temporary locations of facilities preferably with sketches and submit the same to the Engineer for approval.

(F) The Contractor shall provide water needed to conduct the required asbestos abatement. All temporary plumbing or adaptations to supply the needs of the work area shall be installed and removed by the Contractor and the cost thereof included in the unit price bid for abatement work.

Shower water for the decontamination unit shall be provided hot. Heating of water, if necessary, shall be provided by the Contractor.

(G) Any additional electrical equipment (i.e. transformers, etc.), which is necessary shall be at the Contractor's expense.

(H) The Contractor shall provide fire protection in accordance with all State and Local fire codes.

(I) Any parts of the service lines, within the excavated work area, disturbed or damaged by the installation and/or removal of the temporary service lines, shall be restored to their original condition by the Contractor to the satisfaction of the respective utility company.

(J) Contractor shall supply hot shower water necessary for use in the decontamination unit.

67.11.1.12 USE OF THE AREA

(A) The Contractor shall confine Contractor's apparatus, the storage of materials, and supplies, and the operation of the Contractor's workmen to limits established by law, ordinances, and the directions of the Engineer. All flammable or combustible materials shall be properly stored to obviate fire and in areas approved by the Engineer.

(B) The Contractor shall assure of a clear path out of the excavated area, that appropriate safety barriers are established to prevent access, and that work areas are kept neat, clean, and safe.

(C) All surrounding work, fixtures, soil lines, drains, water lines, gas pipes, electrical conduit, wires, utilities, etc. which are to remain in place shall be carefully protected and, if disturbed or damaged, shall be repaired or replaced as directed by the City in accordance with the terms of this contract.

(D) Attention is specifically drawn to the fact that other contractors, performing the work of other contracts, may be (or are) brought upon any of the work sites of this contract. Therefore, the Contractor shall not have exclusive rights to any site of work and shall fully cooperate and coordinate Contractor's work with the work of other contractors who may be on (or are on) any site of the work of this contract. Regulated area exempted.

(E)Temporary toilet facilities must be provided by the Contractor on the site. Coordinate location of such facilities with the Engineer.

67.11.1.13 PROTECTION AND DAMAGE

(A) The Contractor is responsible to cover and protect all equipment that cannot be removed from work areas.

(B) No materials or debris shall be thrown within the excavated area.

(C) Debris shall be removed from the work site daily. Work area shall be left neat and clean after each work shift, so that work may proceed the next regular workday without interruption. Limited bag storage may take place within the work area when approved by the Engineer.

67.11.1.14 RESPIRATORY PROTECTION REQUIREMENTS

(A) Respiratory protection shall be worn by all individuals who may be exposed to asbestos fibers from the initiation of the asbestos project until all areas have successfully passed clearance air monitoring in accordance with regulations and these specifications.

(B) The Contractor shall develop and implement a written respiratory protection program with required site-specific procedures and elements. The program shall be administered by a properly trained individual. The written respiratory protection program shall include the requirements set forth in OSHA Standard 29 CFR 1910.134, at a minimum.

(C) The Contractor shall provide workers with individually issued and marked respiratory equipment. Respiratory equipment shall be suitable for the asbestos exposure level(s) in the work area(s), as specified in OSHA Standards 26 CFR 1910.134 and 29 CFR 1926.1101, NIOSH Standard 42 CFR 84, or as more stringently specified otherwise, herein.

(D) Where respirators with disposable filter parts are employed, the Contractor will provide sufficient filter parts for replacement as necessary or as required by the applicable regulation.

(E) All respiratory protection shall be NIOSH approved.. All respiratory protection shall be provided by the Contractor, and used by workers in conjunction with the written respiratory protection program.

(F) Contractor shall provide respirators selected by an Industrial Hygienist that meet the following requirements:

AIRBORNE CONCENTRATION OF ASBESTOS OR CONDITIONS OF USE	REQUIRED RESPIRATOR
Not in excess of 1-fibers per cubic centimeter (f/cc), ten (10) times Permissible Exposure Level (PEL)	Half-mask air purifying respirator, other than a disposable respirator, equipped with high efficiency filters.
Not in excess of 5-f/cc, 50 times PEL	Full face-piece air-purifying respirator equipped with high efficiency filters.
Not in excess of 100-f/cc, 1,000 times PEL	Powered air purifying respirator equipped with equipped with high efficiency filters or any supplied air respirator operated in continuous flow mode.
Not in excess of 100-f/cc, 1,000 times PEL	Full face-piece supplied air respirator operate in pressure demand mode.
Greater than 1,000-f/cc, 10,000 times PEL, or unknown concentration	Full face-piece supplied air respirator operate in pressure demand mode, equipped with an auxiliary positive pressure self-contained breathing apparatus.

(G) Selection of high efficiency filters:

(1) All high efficiency filters shall have a nominal efficiency rating of 100 (99.97-percent effective) when tested against 0.3-micrometer monodisperse diethyl-hexyl phthalate (DOP) particles.

(2) Choose N-, R-, or P- series filters based upon the presence or absence of oil particles.

(a) N- series filters shall only be used for non-oil solid and water based aerosols or fumes.

(b) R- and P -series filters shall be used when oil aerosols or fumes (i.e., lubricants, cutting fluids, glycerin, etc.) are present. The R- series filters are oil resistant and the P- series filters are oil proof.

(c) Follow filter manufacture recommendations.

(3) If a vapor hazard exists, use an organic vapor cartridge in combination with the high efficiency filter.

(H) Historical airborne fiber level data may serve as the basis for selection of the level of respiratory protection to be used for an abatement task. Historical data provided by the Contractor shall be based on personal air monitoring performed during work operations closely resembling the processes, type of material, control methods, work practices, and environmental conditions present at the site. Documentation of aforementioned results may be requested by the City and/or Testing Laboratory for review. This will not relieve the Contractor from providing personal air monitoring to

determine the time-weighted average (TWA) for the work under contract. The TWA shall be determined in accordance with 29 CFR 1926.1101.

(I) At no time during actual removal operations shall half-mask air purifying respirators be allowed unless a full 8-hour TWA and excursion limit have been conducted, and reviewed by the Project Monitor. Use of single use dust respirators is prohibited for the above respiratory protection.

(J) Workers shall be provided with personally issued and individually marked respirators. Respirators shall not be marked with any equipment that will alter the fit of the respirator in any way. Only waterproof identification markers shall be used.

(K) The Contractor shall ensure that the workers are qualitatively or quantitatively fit tested by an Industrial Hygienist initially and every 12-months thereafter with the type of respirator the Contractor will be using.

(L) Whenever the respirator design permits, workers shall perform the positive and negative air pressure fit test each time a respirator is worn. Powered air-purifying respirators shall be tested for adequate flow as specified by the manufacturer.

(M) No facial hairs (beards) shall be permitted to be worn when wearing respiratory protection that requires a mask-to-face seal.

(N) If a worker wears glasses, a spectacle kit to fit their respirator shall be provided by the Contractor at the Contractor's expense.

(O) Respiratory protection maintenance and decontamination procedures shall meet the following requirements:

(1) Respirators shall be inspected and decontaminated on a daily basis in accordance with OSHA 29 CFR 1910.134 (b); and,

(2) High efficiency filters for negative pressure respirators shall be changed after each shower; and,

(3) Respiratory protection shall be the last piece of worker protection equipment to be removed. Workers must wear respirators in the shower when going through decontamination procedures as stated in Subsection 67.11.3.3; and,

(4) Airline respirators with high efficiency filtered disconnect shall be disconnected in the equipment room and worn into the shower. Powered air-purifying respirator face pieces shall be worn into the shower. Filtered/power pack assemblies shall be decontaminated in accordance with manufacturers recommendations; and,

(5) Respirators shall be stored in a dry place and in such a manner that the face-piece and exhalation valves are not distorted; and,

(6) Organic solvents shall not be used for washing of respirators.

(P) Authorized visitors shall be provided with suitable respirators and instruction on the proper use of respirators whenever entering the work area. Qualitative fit test shall be done to ensure proper fit of respirator.

67.11.1.15 PROTECTIVE CLOTHING

(A) Provide worker protection as required by the most stringent OSHA and/or EPA standards applicable to the work. Provide to all workers, foremen, superintendents, authorized visitors and inspectors, protective disposable clothing consisting of full-body coveralls, head covers, gloves and 18-inch high boot type covers or reusable footwear.

(B) In addition to personal protective equipment for workers, the Contractor shall make available at each worksite at least four (4) additional uniforms and required respiratory equipment each day for personnel who are authorized to inspect the work site. The Contractor shall also provide, for the duration of the work at any site involving a decontamination unit for worksite access, a lockable storage locker for use by the Engineer. In addition to respiratory masks for workers, the Contractor must have on hand at the beginning of each work day, at least four (4) masks each with two (2) sets of fresh filters, for use by personnel who are authorized to inspect the worksite. The Contractor shall check for proper fit of the respirators of all City personnel authorized to enter the work area.

(C) Asbestos handlers involved in tent procedures shall wear two (2) disposable suits, including gloves, hood and footwear, and appropriate respiratory equipment. All street clothes shall be removed and stored in a clean room within the work site. The double layer personal protective equipment shall be used for installation of the tent and throughout the procedure, if a decontamination unit (with shower and clean room) is contiguous to the work area, only one (1) layer of disposable personal protective equipment shall be required; in this case, prior to exiting the tent the worker shall HEPA vacuum and wet clean the disposable suit.

The outer disposable suit (if two (2) suits are worn) shall be removed and remain in the tent upon exiting. Following the tent disposal and work site clean up the workers shall immediately proceed to a shower at the work site. The inner disposal unit and respirator shall be removed in the shower after appropriate wetting. The disposal clothing shall be disposed of as asbestos-containing waste material. The workers shall then fully and vigorously shower with supplied liquid bath soap, shampoo, and clean dry towels.

(D) Coveralls: Provide disposable full-body coveralls and disposable head covers. Require that they be worn by all workers in the work area. Provide a sufficient number for all required changes for all workers in the work area.

(E) Boots: Provide work boots with non-skid soles, and where required by OSHA, foot protection, for all workers. Provide boots at no cost to workers. Paint uppers of all boots yellow with waterproof enamel. Do not allow boots to be removed from the work area for any reason after being contaminated with ACM and/or dust.

(F) Hard Hats: Provide hard hats as required by OSHA for all workers, and provide a minimum of four (4) spares for Inspectors, visitors, etc. Label all hats with same warning label as used on disposal bags. Require hard hats to be worn at all times that work is in progress that may cause potential head injury. Provide hard hats of the type with polyethylene strap suspension. Require hats to remain in the work area throughout the work. Thoroughly clean and decontaminate and bag hard hats prior to removing them from the work area at the end of the work.

(G) Goggles: Provide eye protection (goggles) as required by OSHA for all workers involved in any activity that may potentially cause eye injury. Require them to be worn at all times during these activities. Thoroughly clean and decontaminate goggles before removing them from the work area.

(H) Gloves: Provide work gloves to all workers, of the type dictated by the work and OSHA Standards. Do not remove gloves from the work area. Dispose of as asbestos-contaminated waste at the end of the work. Gloves shall be worn at all times, except during work area preparation activities that do not disturb ACM.

(I) Reusable footwear, hard hats and eye protection devices shall be left in the contaminated Equipment Room until the end of the asbestos abatement work.

(J) Disposable protective clothing shall be discarded and disposed of as asbestos waste every time the wearer exits from the workspace to the outside through the decontamination facility.

(K) Respirators, disposable coveralls, head covers and foot covers shall be provided by the Contractor for the Project Monitor, Engineer and any other authorized representative who may inspect the work area. Provide two (2) respirators and six (6) respirator filter changes per day.

67.11.1.16 AIR MONITORING - CONTRACTOR

(A) The Contractor shall employ a qualified Industrial Hygiene Laboratory to analyze air samples in accordance with OSHA Regulations, 1926.1101 (Asbestos Standards for Construction) and New York City regulations. All costs for this work shall be deemed included in the price(s) bid for item(s) labeled, "INCREMENTAL COST FOR ASBESTOS ABATEMENT WORK PERFORMED ON EXISTING STEEL PIPE WATER MAIN TO BE REMOVED, COMPLETE".

(B) The Industrial Hygiene Laboratory shall be a current proficient participant in the American Industrial Hygiene Association (AIHA) PAT Program. The laboratory identification number shall be submitted and approved by the City. The laboratory shall be accredited by the AIHA and New York State Department of Health Environmental Laboratory Approval Program (ELAP).

(C) The Industrial Hygiene Laboratory shall also be a current proficient participant in the NIST/NVLAP Quality Assurance Program for the identification of bulk samples. Laboratory identification number shall be submitted to and approved by the City.

(D) The Contractor shall require a competent person (as defined in OSHA 1926.1101) to perform the following functions and to be on-site continuously for the duration of the project:

(1) Monitor the set up of the work area enclosure and ensure its integrity.

(2) Control entry and exit into the work enclosure.

(3) Ensure that employees are adequately trained in the use of engineering controls, proper work practices, proper personal protective equipment and in decontamination procedures.

(4) Insure that employees use proper engineering controls, proper work practices, proper personal protective equipment and proper decontamination procedures.

(5) The competent person (as defined in OSHA1926.1101) shall check for rips and tears in work suits, and ensure that they are mended immediately or replaced.

(E) Air monitoring responsibilities, shall be performed by a representative of the testing laboratory retained by the Contractor.

(F) Contractor shall submit to the City all credentials of the designated (as defined in OSHA 1926.1101) and Industrial Hygiene Laboratory representative for approval.

(G) Air monitoring and inspection shall be conducted by the Contractor's competent person (as defined in OSHA 1926.1101).

(H) Continuous (daily or per shift) monitoring and inspection will include work area samples, personnel samples from the breathing zone of a worker to accurately determine the employees' 8-hour TWA (unless Type C respirators are used) and decontamination unit clean room samples.

(I) Work area samples and employee personnel samples shall be taken using pumps whose flow rates can be determined to an accuracy of ±5-percent, at a minimum of two (2) liters per minute. This must be demonstrated at the job site.

(J) Sampling and analysis methods shall be per NIOSH 7400A.

(K) Test Reports:

(1) Promptly process and distribute one (1) copy of the test results, to the Commissioner.

(2) Prompt reports are necessary so that if required, modifications to work methods and/or practices may be implemented as soon as possible.

(3) Contractor shall by facsimile notify the Commissioner within 24-hours of the results of each test, followed by written notification within three (3) days.

(L) The Contractor's competent person shall conduct inspections and provide written reports daily. Inspections will include checking the standard operating procedures, engineering control systems, respiratory protection and decontamination systems, packaging and disposal of asbestos waste, and any other aspects of the project which may affect the health and safety of the people and environment.

(M) All costs for required air monitoring by the Contractor's competent person shall be borne by the Contractor.

(N) The City reserves the right to conduct air and surface dust sampling in conjunction with and separate from the Testing Laboratory for the purposes of Quality Assurance.

(O) All samples shall be accompanied by a Chain of Custody Record that shall be submitted to the Project Monitor upon completion of analysis.

67.11.1.17 TESTING LABORATORY

(A) The City, at its own expense, will employ the services of an Independent Testing Laboratory. The Testing Laboratory will perform air sampling activities at the site and perform periodic observations of the work site.

(B) The Laboratory will perform analysis of air samples utilizing phase contrast microscopy (PCM) and/or transmission electron microscopy (TEM). This laboratory shall meet the standards stated herein.

(C) Observations will include, but not be limited to, checking the standard operating procedures, engineering control systems, respiratory protection, decontamination systems, packaging and disposal of asbestos waste, and any other aspects of the project that may affect the health and safety of the environment, Contractor, and/or facility occupants.

(D) The Testing Laboratory shall have access to all areas of the asbestos removal project at all times and shall continuously inspect and monitor the performance of the Contractor to verify that said performance complies with this specification. The Testing Laboratory shall be on site throughout the entire abatement operation.

(E) The City will be responsible for costs incurred with the required laboratory work. Any subsequent additional testing required due to limits exceeded during initial testing shall be paid for by the Contractor.

(F) At a minimum, air sampling shall be conducted in accordance with the following schedule:

ABATEMENT ACTIVITY	PRE-ABATEMENT	DURING ABATEMENT	POST- ABATEMENT
Equal to or greater than 10,000-square feet or 10,000-linear feet of ACM	PCM	PCM	TEM
Less than 10,000-square feet or 10,000-linear feet of ACM	PCM	PCM	PCM
Exceptions to the above:			
Boiler Rooms	PCM	PCM	PCM
Tent and Glovebag Procedures	PCM	PCM	PCM
Demolitions	PCM	PCM	PCM

Note: TEM is acceptable wherever PCM is required.

(G) Prior to commencement of abatement activities, the Testing Laboratory will collect a minimum number of area samples inside each homogeneous work area.

(1) Samples will be taken during normal activities and circumstances at the work site.

(2) Samplers shall be located within the proposed work area and at all proposed isolation barrier locations.

(3) Samples shall be analyzed using PCM.

(4) The number of samples to be collected will be determined by the size of the project.

(H) Area air sampling during abatement shall be conducted as specified in the following documents except as restricted or modified herein:

(1) Measuring Airborne Asbestos Following An Abatement Action, US EPA document 600/4-85-049 (Nov., 1985);

(2) Guidance For Controlling Asbestos-Containing Materials In Buildings; US EPA Publication 560/5-85-024 (June, 1984);

(3) Methodology For The Measurement Of Airborne Asbestos By Electron Microscopy, US EPA Contract No. 68-02-3266;

(4) Mandatory And Nonmandatory Electron Microscopy Methods, set forth in 40 CFR Part 763, Subpart E, Appendix A;

(5) NIOSH 7400 method using "A" counting rules.

(I) In accordance with the above criteria, area samples (see NYCDEP Asbestos Control Program Regulations) shall conform to the following schedule:

AREA SAMPLES FOR ANALYSIS BY	MINIMUM VOLUME	FLOW RATE
PCM, 25-mm cassettes	560-liters	5 to 15-liters/minute
TEM, 25-mm cassettes	560-liters	1 to 10-liters/minute
TEM, 37-mm cassettes	1,250-liters	1 to 10-liters/minute

(1) All costs resulting from additional air tests and observations shall be borne by the Contractor. These costs may include, but are not limited to, labor, analysis fees, materials, and expenses.

(2) After the area has been found to be in compliance, the Contractor may remove Isolation Barriers, tents if any and perform final cleaning as specified.

(J) Clearance And Excavation Re-entry Criteria:

(1) The clearance criteria shall be applied to each excavated work area independently.

(2) For PCM analysis, the clearance air monitoring shall be considered satisfactory when all of the samples regardless of the size of the project are less than or equal to 0.01-f/cc or the background concentrations, whichever is greater.

(3) For TEM analysis, the clearance air monitoring shall be considered satisfactory when the requirements stated in 40 CFR Part 763, Subpart E, Appendix A, Section IV are met.

(4) As soon as the air monitoring tests are completed, the Testing Laboratory will send the results of such tests to the City and notify the Contractor.

(5) The Contractor shall cooperate fully with all aspects of air monitoring operations.

67.11.1.18 TAMPERING WITH TEST EQUIPMENT

All parties to this contract are hereby notified that any tampering with testing equipment will be considered an attempt at falsifying reports and records to federal and state agencies and each offense will be prosecuted under applicable state and federal criminal codes to the fullest extent possible.

67.11.2 PRODUCTS

67.11.2.1 MATERIALS

(A) Wetting Agents: Surfactant shall consist of resin materials in a water base, that have been tested to ensure materials are nontoxic and nonhazardous. Surfactants shall be installed according to the manufacturer's written instructions.

(B) Encapsulants (Sealants, Lockdown Encapsulants): Encapsulants shall consist of pigmented (nontransparent) liquid material which can be applied to asbestos containing materials or bare surfaces exposed after an abatement which temporarily controls the possible release of asbestos fibers from the material or surface either by creating a membrane over the surface (bridging encapsulant) or by penetrating into the material and binding its components together (penetrating encapsulant). The encapsulant shall be installed according to the manufacturer's written instructions. Sealing materials to be applied to structural members and decking assemblies scheduled to receive spray-applied fireproofing shall be approved by UL for use with the specified material.

(C) Fire Retardant Polyethylene Sheeting: Minimum uniform thickness of 6-mil. Provide largest size possible to minimize seams.

(D) Fire Retardant Reinforced Polyethylene Sheeting: For covering floor of decontamination units, provide translucent, nylon reinforced or woven polyethylene laminated, fire retardant polyethylene sheeting. Provide largest size possible to minimize seams, minimum uniform thickness 6-mil.

(E) Drums: Asbestos-transporting drums, sealable and clearly marked with warning labels as required by OSHA and EPA.

(F) Polyethylene Disposal Bags: Asbestos disposal bags, minimum of 6-mil thick. Bags shall be clearly marked with warning labels as required by OSHA and EPA.

(G) Signs: Asbestos warning signs for posting at perimeter of work area, as required by OSHA and EPA.

(H) Waste Container Bag Liners And Flexible Trailer Trays: One piece leak-resistant flexible tray with absorbent pad.

(I) Tape: Provide tape which is of high quality with an adhesive that is formulated to aggressively stick to sheet polyethylene.

(J) Spray Adhesive: Provide spray adhesive in aerosol cans which is specifically formulated to stick tenaciously to sheet polyethylene.

(K) Flexible Duct: Spiral reinforced flex duct for air filtration devices.

(L) Protective Clothing: Workers shall be provided with sufficient sets of properly fitting, full-body, disposable coveralls, head covers, gloves, and 18-inch high boot-type foot covers. Protective clothing shall conform to OSHA Standard 29 CFR 1926.1101.

67.11.2.2 TOOLS AND EQUIPMENT

(A) Air Filtration Device (AFD): AFDs shall be equipped with High Efficiency Particulate Air (HEPA) filtration systems and shall be approved by and listed with Underwriter's Laboratory.

(B) Transportation Equipment: Transportation Equipment, as required, shall be suitable for loading, temporary storage, transit and unloading of contaminated waste without exposure to persons or property. Any temporary storage containers positioned outside the excavated work area for temporary storage shall be metal, closed and locked.

(C) Vacuum Equipment: All vacuum equipment utilized in the work area shall utilize HEPA filtration systems.

(D) Vacuum Attachments: Soft Brush Attachment, Asbestos Scraper Tool, Drill Dust Control Kit.

(E) Electric Sprayer: An electric airless sprayer suitable for application of encapsulating material and shall be approved by and listed with Underwriters Laboratory.

(F) Water Sprayer: The water sprayer shall be an airless or other low-pressure sprayer for amended water application.

(G) Water Atomizer: Powered air-misting device equipped with a ground fault interrupter and equipped to operate continuously.

(H) Brushes: All brushes shall have nylon bristles. Wire brushes are excluded from use due to their potential to shred asbestos fibers into small, fine fibers. Wire brushes may be used for cleaning pipe joints within glove-bags upon written approval of the Engineer.

(I) Hand Power Tools: Shall be equipped with HEPA-filtered local exhaust ventilation if used to drill, cut into or otherwise disturb ACM.

(J) Other Tools And Equipment: The Contractor shall provide other suitable tools for the stripping, removal, encapsulation, and disposal activities including but not limited to: hand-held scrapers, sponges, rounded-edge shovels, brooms, and carts.

(K) Fans And Leaf Blower: Provide Leaf Blower (one leaf blower per floor) and one 20-inch diameter fans for each 10,000-cubic feet of work area volume to be used for aggressive sampling technique for clearance air testing.

(L) Fire Extinguishers: Provide type "A" fire extinguishers in spaces where there is minimal danger of electrical or grease-oil-flammable liquid fires. In other areas, provide type "ABC" dry chemical extinguishers of NFPA recommended types for the exposure in each case. All fire extinguishers shall comply with the applicable recommendations of NFPA Standard 10, "Standard For Portable Extinguishers." Provide a minimum of four (4) fire extinguishers in each work area; one in the equipment room of the decontamination unit, one outside the work area in the clean room or directly outside same, and two fire extinguishers where they are most effective for their intended purpose. Do not exceed seventy-five (75) feet between fire extinguishers within the workarea.

(M) First Aid Kits: The Contractor shall maintain adequately stocked first aid kits in the clean rooms of the decontamination units and within work areas. The first aid kit shall be approved by a licensed physician for the work to be performed under this contract.

(N) Water Service:

Water Heater: Provide UL rated 40-gallon electric water heaters to supply hot water for Personal Decontamination Enclosure System Shower. Wiring of the water heater shall comply with NEMA, NECA, and UL standards.

(O) Telephone Paging Device:

The Contractor or the Contractor's authorized representative shall, at all times during the normal workday or during periods of overtime work under this contract, carry a digital telephone paging device (Beeper). The device shall be activated by a telephone number in the 718, 212, 646, 917, 800, or 888 area codes. The Contractor shall supply the City with the activation number for the device and respond to calls from the City within one (1) hour. The cost to Contractor for this device and all charges accruing thereto is deemed included in the price(s) bid for item(s) labeled, "INCREMENTAL COST FOR ASBESTOS ABATEMENT WORK PERFORMED ON EXISTING STEEL PIPE WATER MAIN TO BE REMOVED, COMPLETE".

67.11.2.3 CLEANING

(A) Throughout the construction period, the Contractor shall maintain the work area as described in this section.

(1) The Contractor shall prevent excavated areas other than the work area from becoming contaminated with asbestos-containing dust or debris. Should areas outside the work area become contaminated with asbestos-containing dust or debris as a consequence of the Contractor's work practices, the Contractor shall be responsible for cleaning these areas in accordance with the procedures appended in Title 15, Chapter 1 of RCNY and NYSDOL ICR56. All costs incurred in cleaning or otherwise decontaminating nonwork areas and the contents thereof shall be borne by the Contractor at no additional cost to the City.

(2) The Contractor shall provide to all personnel and laborers the required equipment and materials needed to maintain the specified standard of cleanliness.

(B) General:

(1) Waste water from asbestos removal operations, including shower water, may be discharged into the public sewer system only after approved filtration is on operation to remove asbestos fibers.

(2) Asbestos wastes shall be double bagged in six (6) mil (0.006") polyethylene bags approved for ACM disposal and shall be properly labeled and handled before disposal.

(3) The Contractor shall use corrugated cartons or drums for disposal of asbestos-containing waste having sharp edged components (e.g. nails, screws, metal lathe and tin sheeting) that may tear polyethylene bags and sheeting. The waste within the drums or cartons must be double bagged.

(4) The Contractor shall transport all bags of waste to disposal site in thirty (30) gallon capacity metal or fiber drums with tight lids, or in locked steel dumpster.

(5) Dumping of debris, waste or bagged waste will not be permitted.

(6) Cleanup of visible accumulations of loose ACM shall occur whenever there is a sufficient amount to fill a single asbestos bag.

(7) ACM shall be collected utilizing rubber dust pans and rubber squeegees.

(8) HEPA vacuums shall not be used on wet materials unless specifically designed for that purpose.

(9) Metal shovels shall not be used within the work area.

(10) Accumulations of dust shall be cleaned off all surfaces of the work area daily.

(11) Mastic solvent when used will be applied in moderation (e.g. by airless sprayer).

(12)The Contractor shall retain all items in the storage area in an orderly arrangement allowing maximum access, not impeding traffic, and providing the required protection of all materials.

(13)The Contractor shall not allow accumulation of scrap, debris, waste material, and other items not required for use in this work. Asbestos contaminated waste must not be kept on the work site overnight.

(14)At least twice a week (more if necessary), the Contractor shall completely remove all scrap, debris and waste material from the job site.

(15)The Contractor shall provide adequate storage space for all items awaiting removal from the job site, observing all requirements for fire protection and concerns for the environment.

(16)All respiratory protection equipment shall be selected from the latest NIOSH Certified Equipment list.

(17)Daily and more often, if necessary, the Contractor shall inspect the work areas and adjoining spaces, and pick up all scrap, debris, and waste material. All such items shall be removed to the place designated for their storage.

(18)Weekly, and more often, if necessary, the Contractor shall inspect all arrangements of materials stored on the site; re-stack and tidy them or otherwise service them to meet the requirements of these specifications.

(19)The Contractor shall maintain the site in a neat and orderly condition at all times.

67.11.3 EXECUTION

67.11.3.1 WORKER DECONTAMINATION FACILITY

(A) Large Asbestos Projects (Small Project Option):

Provide a worker decontamination facility in accordance with, Title 15, Chapter 1, OSHA Standard 29 CFR 1926.1101, 12NYCRR Part 56 and as specified herein. Worker decontamination shall be in accordance of the NYCDEP approved procedure for removing asbestos containing coal tar wrap.

(a) Structure:

(1) Use modular systems or build using wood or metal frame studs, joists, and rafters placed at a maximum of 16-inches on-center.

(2) When worker decontamination unit is located outdoors, in areas with public access, or in correctional facilities, frame work shall be lined with minimum 3/8" thickness plywood sheathing. Sheathing shall be caulked or taped airtight at all joints and seams.

(3) Interior shall be covered with two (2) layers of opaque 6-mil polyethylene sheeting, with a minimum overlap of 12-inches at seams. Seal seams airtight using tape and adhesive. The interior floor shall be covered with two (2) layers of reinforced fire-retardant polyethylene sheeting with a minimum overlap on the walls of twelve (12) inches.

(4) Entrances to the decontamination unit shall be secured with lockable hinged doors. Doors shall be open at all times when abatement operations are in progress. Doors shall be louvered to allow for air movement through the decontamination units into work area.

(b) Curtained Doorways: A device to allow ingress or egress from one room to another while permitting minimal air movement between the rooms.

(c) Air Locks: Air locks shall consist of two curtained doorways placed a minimum of three (3) feet apart.

(d) Decontamination Enclosure System shall be placed adjacent to the work area and shall consist of three (3) totally enclosed chambers, separated from work area and each other by airlocks, as follows:

(1) Equipment Room: The equipment room shall have a curtain doorway to separate it from the work area, and share a common airlock with the shower room. The equipment room shall be large enough to accommodate at least one (1) worker (allowing them enough room to remove their protective clothing and footwear), and a 6-mil disposal bag for collection of discarded clothing and equipment. The equipment room shall be utilized for the storage of equipment and tools after decontamination using a HEPA-vacuum and/or wet cleaning. A one-day supply of replacement filters, in sealed containers, for HEPA-vacuums and negative air machines, extra tools, containers of surfactant, and other materials and equipment required for the project shall be stored here. A walk-off pan filled with water shall be placed in the work area just outside the equipment room for persons to clean foot coverings when leaving the work area. Contaminated footwear and reusable work clothing shall be stored in this room.

(2) Shower Room: The shower room shall have two (2) airlocks (one that separates it from the equipment room and one that separates it from the clean room). The shower room shall contain at least one (1) shower, with hot and cold water adjustable at the tap, per eight (8) workers. Careful attention shall be given to the shower to ensure against leaking of any kind. Contractor shall supply towels, shampoo and liquid soap in the shower room at all times. Shower water shall be drained collected, and filtered through a system with at least a 5-micron particle size collection capacity. A system containing a series of several filters with progressively smaller pore sizes shall be used to avoid rapid clogging of the filters by large particles. Filtered water shall be discharged in accordance with applicable codes. Contaminated filters shall be disposed of as asbestos waste.

(3) Clean Room: The clean room shall share a common airlock with the shower room and shall have a curtained doorway to separate it from outside noncontaminated areas. Lockers, for storage of workers' street clothing, and shelves, for storing respirators, shall be provided in this area. Clean disposable clothing, replacement filters for respirators, and clean dry towels shall be provided in the clean room. The clean room shall not be used for the storage of tool, equipment or other materials.

(B) Small Asbestos Projects:

Provide a worker decontamination facility in accordance with, Title 15, Chapter 1, OSHA Standard 29 CFR 1926.1101, 12NYCRR Part 56 and as specified herein. Unless approved by NYCDEP and the City, worker decontamination facilities shall be attached to the work areas.

(a) Structure:

(1) Use modular systems or build using wood or metal frame studs, joists, and rafters placed at a maximum of 16-inches on-center.

(2) When worker decontamination unit is located outdoors, in areas with public access, or in correctional facilities, frame work shall be lined with minimum 3/8" thickness plywood sheathing. Sheathing shall be caulked or taped airtight at all joints and seams.

(3) Interior shall be covered with two (2) layers of opaque 6-mil polyethylene sheeting, with a minimum overlap of 12-inches at seams. Seal seams airtight using tape and adhesive. The interior floor shall be covered with two (2) layers of reinforced fire-retardant polyethylene sheeting with a minimum overlap on the walls of twelve (12) inches.

(4) Entrances to the decontamination unit shall be secured with lockable hinged doors. Doors shall be open at all times when abatement operations are in progress. Doors shall be louvered to allow for air movement through the decontamination units into work area.

(b) Curtained Doorways: A device to allow ingress or egress from one room to another while permitting minimal air movement between the rooms.

(c) Air Locks: Air locks shall consist of two (2) curtained doorways placed a minimum of three (3) feet apart.

(d) Decontamination Enclosure System shall be placed adjacent to the work area and shall consist of three (3) totally enclosed chambers, separated from work area and each other by airlocks, as follows:

(1) Shower Room: The shower room shall have two (2) airlocks (one that separates it from the work area and one that separates it from the clean room). The shower room shall contain at least one (1) shower, with hot and cold water adjustable at the tap, per eight (8) workers. Careful attention shall be given to the shower to ensure against leaking of any kind. The Contractor shall supply towels, shampoo and soap in the shower room at all times. Shower water shall be drained collected, and filtered through a system with at least a 5-micron particle size collection capacity. A system containing a series of several filters with progressively smaller pore sizes shall be used to avoid rapid clogging of the filters by large particles. Filtered water shall be discharged in accordance with applicable codes. Contaminated filters shall be disposed of as asbestos waste.

(2) Clean Room: The clean room shall share a common airlock with the shower room and shall have a curtained doorway to separate it from outside noncontaminated areas. Lockers, for storage of workers' street clothing, and shelves, for storing respirators, shall be provided in this area. Clean disposable clothing, replacement filters for respirators, and clean dry towels shall be provided in the clean room. The clean room shall not be used for the storage of tools, equipment or other materials.

(C) Decontamination Enclosure System Utilities: Lighting, heat, and electricity shall be provided as necessary by the Contractor, and as specified herein.

67.11.3.2 WASTE DECONTAMINATION FACILITY

(A) Large Asbestos Project (Small Project Option):

Provide a worker decontamination facility in accordance with, Title 15, Chapter 1, OSHA Standard 29 CFR 1926.1101, 12NYCRR Part 56 and as specified herein. Unless approved by NYCDEP and the City, worker decontamination facilities shall be attached to the work areas.

(a) Structure:

(1) Use modular systems or build using wood or metal frame studs, joists, and rafters placed at a maximum of 16-inches on-center.

(2) When worker decontamination unit is located outdoors, in areas with public access, or in correctional facilities, frame work shall be lined with minimum 3/8" thickness plywood sheathing. Sheathing shall be caulked or taped airtight at all joints and seams.

(3) Interior walls shall be covered with two (2) layers of opaque 6-mil polyethylene sheeting, with a minimum overlap of 12-inches at seams. Seal seams airtight using tape and adhesive. The interior floor shall be covered with two (2) layers of reinforced fire-retardant polyethylene sheeting with a minimum overlap on the walls of twelve (12) inches.

(4) Entrances to the decontamination unit shall be secured with lockable hinged doors. Doors shall be open at all times when abatement operations are in progress. Doors shall be louvered to allow for air movement through the decontamination units into the work area.

(b) Curtained Doorways: A device to allow ingress or egress from one room to another while permitting minimal air movement between the rooms.

(c) Air Locks: Air locks shall consist of two (2) curtained doorways placed a minimum of three (3) feet apart.

(d) Decontamination Enclosure System shall be placed adjacent to the work area and shall consist of three (3) totally enclosed chambers, separated from the work area and each other by airlocks, as follows:

(1) Washroom: An equipment washroom shall have two (2) air locks (one separating the unit from the work area and one common air lock that separates it from the holding area. The washroom shall have facilities for washing material containers and equipment. Gross removal of dust and debris from contaminated material containers and equipment shall be accomplished in the work area, prior to moving to the washroom.

(2) Holding Area: A holding area shall share a common air lock with the equipment washroom and shall have a curtained doorway to outside areas. A hinged, lockable door shall be placed at the holding area entrance to prevent unauthorized access into the work area.

(B) Decontamination Enclosure System Utilities: Lighting, heat, and electricity shall be provided as necessary by the Contractor, and as specified herein.

67.11.3.3 PERSONNEL ENTRANCE AND DECONTAMINATION PROCEDURES FOR REMOVAL OPERATIONS UTILIZING REMOTE DECONTAMINATION FACILITIES

(A) All individuals who enter the work area shall sign the entry log, located in the clean room, upon each entry and exit. The log shall be permanently bound and shall fully identify the facility, agents, contractor(s), the project, each work area, and worker respiratory protection employed. The job supervisor shall be responsible for the maintenance of the log during the abatement activity.

(B) Each worker shall remove street clothes in the clean room; wear two (2) disposable suits, including gloves, hoods and non-skid footwear; and put on a clean respirator (with new filters) before entering the work area.

(C) Each worker shall, before leaving the work area or tent, clean the outside of the respirators and outer layer of protective clothing by wet cleaning and/or HEPA-vacuuming. The outer disposable suit shall be removed in the airlock prior to proceeding to the Worker Decontamination Unit. The inner disposable suit and respirator shall be wet wiped and HEPA-vacuumed thoroughly before removing and prior to aggressive shower.

(D) Following showering and drying off, each worker or authorized visitor shall proceed directly to the clean room, dress in street clothes, and exit the decontamination enclosure system immediately.

67.11.4 PREPARATION OF WORK AREA AND REMOVAL PROCEDURES

67.11.4.1 REMOVAL OF ASBESTOS-CONTAINING MATERIAL

(A) Contractor shall be responsible for the proper removal of ACM from the work area using standard industry techniques. The Testing Laboratory representative shall observe the work.

General Requirements:

(a) Removal of ACM shall be performed using wet methods. Dry removal of ACM is prohibited.

(b) Spray ACM with amended water with sufficient frequency and quantity to enhance penetration. Sufficient time shall be allowed for amended water to penetrate the material to the substrate prior to removal. All ACM shall be thoroughly wetted while work is being conducted.

(c) Accumulation of standing water on the floor of the work area is prohibited.

(d) Apply removal encapsulants, when used, in accordance with the manufacturer's recommendations and guidelines.

(e) Containerize ACM immediately upon detachment from the substrate.

(f) Pre-Removal Inspections:

(1) Prior to removal of any ACM, the Contractor shall notify the Testing Laboratory and request a pre-removal inspection. Posting of warning signs, building of decontamination enclosure systems, and all other preparatory steps have been taken prior to notification of the Testing Laboratory.

(2) Contractor shall correct any deficiencies observed by Testing Laboratory at no additional cost to City.

(3) Following the Testing Laboratory's approval of the work area preparations, removal of ACM may commence.

(B) Removal of Coal Tar Wrap shall be as follows:

Work shall be performed as outlined in the coal tar wrap removal procedures (see Appendix) approved by the New York City Department of Environmental Protection (NYCDEP).

67.11.4.2 MAINTENANCE OF CONTAINED WORK AREA AND DECONTAMINATION ENCLOSURE SYSTEMS

(A) Ensure that barriers are installed in a manner appropriate to the expected weather conditions during the project and for its duration. Repair damaged barriers and remedy defects immediately upon their discovery. Visually inspect barriers at the beginning and end of each work period.

(B) Visually inspect nonwork areas and the decontamination enclosure system for water leakage. Perform the visual inspection a minimum of two (2) times for each 8-hour work shift.

67.11.5 ASBESTOS WASTE MANAGEMENT

67.11.5.1 ACM WASTE REQUIREMENTS

(A) The Contractor and all subcontractors are specifically alerted to the illegal practice of combining asbestos-containing waste (ACW) from one project with the ACW of other projects without using the services of a permitted waste transfer station as defined by 6 NYCRR Part 360 and 364. As part of the shop drawing submittals, the Contractor must submit for approval the proposed method of transportation and disposal that will be utilized to manage the ACW of this contract. If a permitted transfer station is to be used, the cost shall be included in the bid price. The Contractor must submit a waste manifest consistent with whatever approved method is utilized as part of the invoicing and payment procedures.

(B) The Contractor shall maintain compliance with the strictest set of regulations of Title 15, Chapter 1 of RCNY, NYC LL 70/85, NYS DOL ICR 56, USEPA, Asbestos Regulation 40 CFR Section 61.152, 29

CFR 1926.1101, 29 CFR 1910.1200 (F) of OSHA's Hazard Communication Standards, and other applicable standards.

NOTE: Any penalties incurred for failure to comply with any of the above regulations and/or fines imposed due to negligence of the Contractor will be the sole responsibility of the Contractor.

When presenting ACW for storage at the generation site, the Contractor shall:

(1) Wet down ACW in a manner sufficient to prevent all visible emissions of dust into the air.

(2) Seal material in a leak tight container while wet.

(3) Keep ACW separate from any other waste.

(C) When presenting ACW for storage away from the site of generation, the Contractor shall:

(1) Ensure that ACW has been properly packaged as per requirements above.

(2) Examine the containers of ACW to ensure that there are no breaks in the containers and that no visible dust is being released into the air.

(3) If examination reveals damage to a container of ACW the Contractor or person accepting the waste shall immediately wet down the ACW and repackage it into a clean leak tight container. The subsequent repackaging shall be the financial responsibility of the Contractor and occur at no extra cost to the City.

(4) Keep ACW separate from any other waste.

(D) When storing ACW - The Contractor shall:

(1) Ensure that the ACW has been sufficiently wetted down in tight containers.

(2) Rewet and repackage any damaged containers.

(3) Maintain at storage site an adequate supply of spare leak tight containers.

(4) Maintain at storage site an adequate supply of amended water.

(5) Keep ACW separate from any other waste.

(6) Keep ACW in a secured, enclosed, and locked container.

(7) If the Contractor has intention of sorting a quantity of ACW greater than or equal to 50-cubic yards, the Contractor shall:

Submit a written request and receive written approval from the City.

(E) When presenting for transport, the Contractor shall:

(1) Ensure that ACW has been sufficiently wetted down.

(2) Examine the integrity of the container's airtight seal.

(3) Rewet and repackage any damaged containers.

(4) Keep ACW separate from all other waste.

(5) Ensure that a person transporting asbestos waste holds a valid permit issued pursuant to law.

(6) Frequency of waste removal:

Properly packaged and labeled asbestos waste shall be removed from the site on a daily basis. Under no circumstance shall asbestos waste be stored on site without written approval from the City. The Waste Hauler and landfill shall be as indicated on the notifications to regulatory agencies.

(F) Waste Load-Out Through Equipment Decontamination Enclosure (Full Decontamination Facility): Place asbestos waste in disposal bags. Large items not able to fit into disposal bags shall be wrapped in one (1) layer of 6-mil thick polyethylene sheeting. Clean outer covering of asbestos waste package by wet cleaning and/or HEPA-vacuuming in a designated part of the work area. Move wrapped asbestos waste to the equipment washroom, wet clean each bag or object and place it inside a second disposal bag, or a second layer of 6-mil polyethylene sheeting, as the item's physical characteristics demand. Air volume shall be minimized, and the bags or sheeting shall be sealed airtight with tape.

(1) The clean containerized items shall be moved to the equipment decontamination enclosure holding area pending load-out to storage or disposal facilities.

(2) Workers who have entered the equipment decontamination enclosure system from the uncontaminated nonwork area shall perform load-out of containers from the decontamination enclosure holding area. Dress workers moving asbestos waste to storage or disposal facilities in clean overalls of a color different than from that of coveralls used in the work area. Ensure that workers do not enter from uncontaminated areas into the equipment washroom or the work area. Ensure that contaminated workers do not exit the work area through the equipment decontamination enclosure system.

(3) Thoroughly clean the equipment decontamination enclosure system immediately upon completion of the waste load-out activities, and at the completion of each work shift.

(4) Labeled ACM waste containers or bags shall not be used for non-ACM debris or trash. Any materials placed in labeled containers or bags, including those turned "inside-out", shall be handled and disposed of as ACM waste.

(G) All asbestos materials, wastes, shower water, polyethylene, disposable equipment and supplies shall be disposed of as contaminated waste, in accordance with the EPA regulation (40 CFR, Section 61.150) and those requirements of the New York Department of Environmental Conservation and New York City Department of Sanitation.

(H) All asbestos materials shall be prepared for transportation in accordance with this specification and all applicable Federal, State, County and City Regulations. The Contractor shall submit the following documentation:

(1) Where applicable, an EPA Generator's identification number which has been obtained from the EPA for all asbestos waste generated from the project.

(2) Applicable State Waste Hauler license and registration numbers.

(3) Federal Hazardous Materials Waste Hauler number.

(4) Designated landfill EPA Permit numbers.

(I) Prior to loading asbestos waste the enclosed cargo areas (dumpster) shall be prepared as follows:

(1) Clean via HEPA-vacuum and wet wipe techniques the enclosed cargo areas of all visible debris prior to preparing with polyethylene.

(2) Line the cargo area with two (2) layers of 6-mil polyethylene sheeting to prevent contamination from damaged or leaking containers. Floor sheeting shall be installed first and extend up the walls a minimum of 24-inches. Wall sheeting shall be overlapped and taped securely into place.

(J) Asbestos-containing waste shall be placed on level surfaces in the cargo area of the dumpster and shall be packed tightly to prevent any shifting or tipping of the waste during transportation.

(K) Asbestos-containing waste shall not be thrown into or dropped from the dumpster. All material shall be handled carefully to prevent rupture of the containers.

(L) All personnel engaged in handling and loading of contaminated waste outside of the work area shall wear protective clothing. The disposable clothing shall include head, body and foot protection and color of clothing shall be different from abatement personnel in the work area. Minimum respiratory protection shall be half face, dual cartridge, air purifying respirators with HEPA-filters.

(M) The Contractor shall immediately clean debris or residue observed on containers or surfaces outside of the work area. Cleaning shall be via HEPA equipped wet/dry vacuums only.

(N) All asbestos-containing waste shall be transported from the abatement site to the landfill by a registered Waste Hauler. When transporting ACW:

(1) Ensure that the ACW has been sufficiently wetted down in a leak tight container.

(2) Rewet and repackage any damaged containers.

(3) Maintain at storage site an adequate supply of spare leak tight containers.

(4) Maintain at storage site an adequate supply of amended water.

(5) Keep ACW separate from any other waste.

(O) Keep ACW in a secured, enclosed, and locked container.

(P) Waste transport documents shall conform to the requirements of the U.S. Department of Transportation, Hazardous Materials Transportation Regulation, 49 CFR Part 173 and EPA 40 CFR 61.150 (d)(1)(2). Shipping documents shall be clearly marked with the required designation "RQ Asbestos". The Contractor shall provide a copy of this document to the City.

(Q) A uniform hazardous waste manifest shall be prepared by the Contractor and signed by the Contractor each time the Contractor ships a dumpster load of Asbestos-Containing Waste Material. The uniform hazardous waste manifest shall include the site of waste generation, the names and addresses of the Transporter, the Contractor, and the landfill operator with information on the type and number of asbestos-waste containers, time and date. The Contractor shall provide the Engineer, Testing Laboratory or authorized designated representative with signed copies of the waste manifest before each departure.

(R) The Contractor or the Contractor's registered hazardous Waste Hauler shall transport asbestos-containing waste material from the abatement site directly to the specified disposal site. The Contractor or Waste Hauler shall not accept material from any other site when transporting asbestos-containing waste material from the abatement site. The authorized DDC representative or Engineer reserves the right to travel with Contractor's Waste Hauler to the waste disposal site. No intermediate storage of waste material (i.e. Contractors warehouse) shall be permitted.

(S) Final or progress application for payments will not be processed unless all hazardous waste manifests generated to date have been received and reviewed by the Engineer.

(T) All asbestos materials, wastes, shower water, polyethylene disposable equipment and supplies shall be disposed of as contaminated waste, in accordance with the EPA regulation (40 CFR, Section

61.150) and those requirements of the New York State Department of Environmental Conservation and the New York Department of Sanitation.

(U) The Contractor shall transport all sealed drums to a landfill disposal site approved by the Department of Environmental Conservation and the EPA. Transportation shall be performed by a New York State registered Waste Hauler, where required. When presenting the ACW for disposal the Contractor or subcontractor shall:

(1) Ensure that waste container is properly labeled according to the National Emission Standard for Hazardous Air Pollutants (NESHAP); Asbestos Revision, 40 CFR, Part 61, Subpart M. The labels shall include the name of the waste generator and the location where the waste was generated.

(2) Comply with all applicable orders issued pursuant to asbestos disposal.

(3) Ensure that ACW has been sufficiently wetted down.

(4) Rewet and repackage any damaged containers.

(5) Keep ACW separate from all other wastes.

(V) The Contractor shall notify the waste disposal site, at least 24-hours prior to transportation of contaminated waste to be delivered. The Contractor shall determine if a larger notification period is required.

(W) At the site, the Contractor or Waste Hauler trucks shall approach the dump location as close as possible for unloading asbestos waste. Containers shall be carefully placed in the ground. Do not throw containers from truck.

(X) The Contractor or Waste Hauler shall inspect containers as they are unloaded at the disposal site. Material in damaged containers shall be repacked in empty containers, as necessary.

(Y) The Contractor or Waste Hauler shall not remove asbestos-containing waste material from drums unless required to do so by the disposal site City. Used drums shall be disposed of as asbestos-contaminated waste.

(Z) All personnel engaged in unloading of the containers at the waste site shall wear protective clothing. The disposable clothing shall include head, body and foot protection. Minimum respiratory protection shall be half face, dual cartridge, air purifying respirators with HEPA-filters. Workers shall remove their protective clothing at the disposal site, place it in labeled disposal bags and leave them with the deposited waste shipment.

(AA) For the compaction operation, the Contractor shall ensure that disposal sites personnel have been provided with personal protective equipment by the disposal operator. If the disposal site City has not provided this protective equipment, the Contractor shall supply protective clothing and respiratory protection for the duration of this operation (PAPR respirators are mandatory).

(BB) If containers are broken or damaged, the Contractor or Waste Hauler shall, using personnel who are properly trained and wearing proper protective equipment, shall repackage the waste in properly labeled containers. The Contractor shall then clean the entire truck and its contents using HEPA-vacuums and wet cleaning techniques until no visible residue is observed.

(CC) Following the removal of all containerized waste, the Contractor shall decontaminate the truck cargo area using HEPA-vacuums and/or wet cleaning techniques until no residue is observed. All 6-mil polyethylene sheeting shall be removed and discarded as asbestos-containing waste material along with contaminated cleaning material and protective clothing, in containers at the disposal site.

(DD) The transporter(s) of all asbestos waste shall not back-haul any items on returning from landfill/disposal site.

(EE) All asbestos waste shall be disposed of in an approved Asbestos Landfill site only.

(1) NO PERSON UNDER ANY CIRCUMSTANCES SHALL ABANDON A.C.W. The same shall be disposed of only by certified persons in approved landfills.

(2) A manifest form will be signed by the Landfill documenting receipt and acceptance of the asbestos-containing waste. This manifest will be furnished to the City of New York.

(3) It is the responsibility of the Asbestos Contractor to determine current waste handling, transportation and disposal regulations for the work site and for each waste disposal landfill. The Asbestos Contractor must comply fully with these regulations and all appropriate U.S. Department of Transportation, EPA and other Federal, State and Local entities' regulations and all other current legal requirements.

(4) The Asbestos Contractor shall obtain an agreement from the transporter(s) that the practice of "Back-Hauling" will not be engaged in, with respect to any and all waste loads taken from this site during the work.

(5) The Asbestos Contractor will document actual disposal of the waste at the designated landfill by having completed a Disposal Certificate and will provide a copy of the same to the Department of Design and Construction.

67.11.6 ACCEPTANCE

67.11.6.1 ACCEPTANCE

(A) Upon satisfactory completion of all decontamination procedures, a certificate will be issued by the Engineer with copies to all parties.

(B) A Letter Of Compliance stating that all the work on the project was performed in accordance with the specifications and all applicable Federal, State and Local regulations.

(C) All warranties as stated in the specifications.

67.11.7 MEASUREMENT AND PAYMENT

67.11.7.1 MEASUREMENT

The quantity of "INCREMENTAL COST FOR ASBESTOS ABATEMENT WORK PERFORMED ON EXISTING STEEL PIPE WATER MAIN TO BE REMOVED, COMPLETE" to be measured for payment shall be the actual number of linear feet of each size steel water main pipe and fittings with asbestos containing coal tar wrap removed in compliance with the requirements of this section. Measurement shall be made in linear feet along the axis of the pipes. The removal lengths of valves, fittings and other pipe connections that are attached to the steel pipe water main and required to be removed as part of the removal operation of the existing steel pipe water main shall be included for purpose of this calculation.

No additional measurement for payment will be made for the removal of any coal tar wrap asbestos containing material from the existing steel pipe which is designated to remain in place, but is required to facilitate the cutting of the existing pipe and joining it to the new pipe to the existing steel pipe. The cost shall be deemed to be included in the unit price bid for this item.

67.11.7.2 PAYMENT

The contract price for "INCREMENTAL COST FOR ASBESTOS ABATEMENT WORK PERFORMED ON EXISTING STEEL PIPE WATER MAIN TO BE REMOVED, COMPLETE" shall be the unit price bid per

each size existing steel pipe water main's incremental cost difference for all labor, material, equipment, insurance, and incidentals required to complete all work under other scheduled contract items, using the methods required under this section to remove and dispose of coal tar wrap asbestos containing materials associated with water main replacement.

This item will be paid only in conjunction with other scheduled contract items for installing the new steel water main pipe (e.g. Payment would be made under the unit price bid for Item No. 60.21SP6T72 - FURNISHING, DELIVERING AND LAYING 72-INCH STRAIGHT STEEL PIPE, 3/4-INCH WALL THICKNESS, for the length of pipe installed plus payment would be made under the unit price bid for Item No. 67.11AA72 - INCREMENTAL COST FOR ASBESTOS ABATEMENT WORK PERFORMED ON EXISTING 72-INCH DIAMETER STEEL PIPE WATER MAIN TO BE REMOVED, COMPLETE, in order to remove and dispose of the existing asbestos contaminated coal tar wrapped pipe). However, payment will be made under this item only for the initial length of pipe and appurtenances removed at a particular location.

Payment for Incremental Cost For Asbestos Abatement Work Performed On Existing Steel Pipe Water Main To Be Removed, Complete will be made under the Item Number as calculated below:

The Item Numbers for Incremental Cost For Asbestos Abatement Work Performed On Existing Steel Pipe Water Main To Be Removed, Complete have nine characters. (The decimal point is considered a character, the third character.)

(1) The first five characters shall define Incremental Cost For Asbestos Abatement Work Performed On Existing Steel Pipe Water Main To Be Removed, Complete:

67.11

(2) The sixth and seventh characters shall define Incremental Cost For Asbestos Abatement Work Performed On Existing Steel Pipe Water Main To Be Removed, Complete:

AA - Incremental Cost For Asbestos Abatement Work Performed On Existing Steel Pipe Water Main To Be Removed, Complete

(3) The eighth and ninth characters shall define the Diameter of the Existing Steel Pipe Water Main. (The eighth and ninth characters representing the unit of inches for the Diameter of the Existing Steel Pipe Water Main.) See examples below:

36 - 36"
72 - 72"

(4) Examples of Item Numbers together with Description and Pay Unit as provided in the Bid Schedule are provided below:

Item No.	Description	Pay Unit
67.11AA36	INCREMENTAL COST FOR ASBESTOS ABATEMENT WORK PERFORMED ON EXISTING 36-INCH DIAMETER STEEL PIPE WATER MAIN TO BE REMOVED, COMPLETE	L.F.
67.11AA72	INCREMENTAL COST FOR ASBESTOS ABATEMENT WORK PERFORMED ON EXISTING 72-INCH DIAMETER STEEL PIPE WATER MAIN TO BE REMOVED, COMPLETE	L.F.

APPENDIX

NYCDEP ATTACHMENTS

NYC DEP Asbestos Control Program VAR #_____

ATTACHMENT TM
REQUIREMENTS FOR MODIFIED TENT PROCEDURES (FOR GROSS ABATEMENT)
APPLIES TO VARIANCES FROM TITLE 15, CHAPTER 1, RULES OF THE CITY OF NEW YORK, SECTIONS 1-81(m) AND 1-91(c) {15 RCNY § 1-81(m) AND § 1-91(c)}

1. All tent enclosures and contiguous spaces within a radius of 10 feet shall be roped off and regulated to allow only certified workers and authorized visitors to enter.

2. 15 RCNY § 1-106 shall be complied with except that
   I. all tents shall be lined with 2 layers of plastic sheeting (6-mil thickness at a minimum);
   ii. the amounts of ACM that may be abated in each modified tent shall NOT EXCEED (a) 160 square feet and/or (b) 260 linear feet.
   iii. the total amount of ACM that may be abated at any one time in several modified tents shall NOT EXCEED 1,000 combined square feet plus linear feet.

3. All modified tents shall be fully framed (including horizontally across the top, if applicable) with 2x3 (minimum) wood or metal studs spaced not more than 36 inch center-to-center vertically around all sides (except at the entry/exit which shall not exceed 36 inch width); and

4. A minimum of one air volume change per 15 minutes through each modified tent shall be maintained.

5. An airlock having at least 3 feet length between the two curtained doorways shall be constructed at the entrance to each and every tent if the decontamination unit is not attached to the tents, and

6. If a decontamination unit is not attached to each tent, located within each airlock there shall be extra clean and uncontaminated disposable protective suits (e.g.Tyveks), and one such clean suit shall be worn by each worker in the airlock, immediately after removal of the outer suit as per 15 RCNY § 1-106(k), before each worker exits any airlock.

7. Any decontamination unit that is not attached to a tent (i.e. that is remote from a tent) shall be constructed in compliance with the requirements of Attachment D and must be located on the same floor as the modified tents.

8. Decontamination units that are attached to tents shall comprise at least a shower room and a clean room, with one curtained doorway separating them, and with a second curtained doorway separating the tent from the shower room.

9. After the ACM removal and bagging [refer 15 RCNY § 1-106(f) and (g)], the bagged waste shall be HEPA-vacuumed then wet cleaned and transferred into the airlock or into the shower room (as per Items 5 and 8 above respectively) for double bagging, and thereafter the double-bagged waste shall be transferred outside the airlock or outside the clean room for its final transfer to storage in a holding area and/or to legal means of disposal.

10. If the integrity of the tent is compromised and/or visible emissions are detected outside the tent and/or levels exceed 0.01 f/cc work shall stop and 15 RCNY § 1-45(a) shall be complied with immediately. Post-abatement clearance air samples shall be required in the areas outside the tent.

11. A minimum of 3 during area air samples and 3 post abatement clearance air samples must be taken in compliance with section 1-41 of the NYC DEP Asbestos Regulation for each modified tent.

NOTE: This attachment may be revised at any time by the Department.

TRU/JM 04/2005

NYC DEP ASBESTOS CONTROL PROGRAM VAR#_____

ATTACHMENT D
REMOTE WORKER DECONTAMINATION UNIT

APPLIES TO VARIANCE FROM TITLE 15, CHAPTER 1, RULES OF THE CITY OF NEW YORK SECTIONS 1-82(a) AND 1-83(a)* {15 RCNY § 1-82(a) AND § 1-83(a)*}.

1. The remote worker decontamination unit shall be constructed outside the work area, in accordance with 15 RCNY § 1-82, and attached to individual glovebag work areas (or tents) or common space leading to individual work areas.

2. The remote worker decontamination unit shall consist of, at least, a shower room, and a clean room separated from each other by an airlock and from the glovebag work area.

3. In addition to the shower heads, the shower room shall be provided with a flexible hose for equipment and waste decontamination.

4. The remote holding area for the asbestos containing waste shall comply with Title 16, Chapter 8, Rules of the City of New York (16RCNY 8 ET SEQ.)

5. The decontamination unit shall be maintained in accordance with 15 RCNY § 1-94 (except sub-section b).

6. All asbestos handlers shall wear two disposable suits, including gloves, hood and footwear, and appropriate respiratory equipment, after removing street clothes in the clean room, and must exit from the shower room.

7. Each worker, before leaving the glovebag work area (or tent), shall clean the outside of the respirators and outer protecting clothing by wet cleaning and/or HEPA vacuuming. The outer disposable suit shall be removed in the work area and the workers shall then proceed to the shower room. The inner disposable suit and respirator shall be washed thoroughly before removing and prior to aggressive shower.

8. After the ACM removal and bagging {refer 15 RCNY § 1-105(c)15}, the bagged waste shall be HEPA-vacuumed and then transferred to the shower room for wet cleaning and double bagging, prior to storage and disposal.

9. Worker and waste decontamination cannot take place at the same time and decontamination system shall be in place for the entire duration of the abatement activities.

10. The following additional conditions must be complied with in order to re-use an attached decontamination enclosure system(s) as a remote decontamination unit.

    i) Final air clearance must be achieved in the full containment area to which the decontamination enclosure system(s) is attached.

    ii) The decontamination enclosure system(s) shall be re-plasticized in accordance with 15 RCNY § 1-82.

*Required for projects disturbing 1,000 or more linear feet.

NOTE: This attachment may be revised at any time by the Department.

TEU/JM 4/2005

ATTACHMENT
ASBESTOS CONTAINING COAL TAR WRAP AND PIPE REMOVAL PROCEDURE

The work procedure to be utilized for the removal of asbestos and the water main pipe shall be as follows:

I. Personal Protective Equipment

Prior to beginning work, all workers performing the removal of the coal tar wrap must equip themselves with the proper personal protective equipment (PPE). The PPE required for the removal of coal tar wrap includes:

(1) Tyvek suit with boot protection ("booties").
(2) Disposable gloves (latex ornitrile).
(3) Eye protection.
(4) Half face respirator with HEPA cartridges.

In addition to the PPE listed above, the tools and materials which will be required for this operation shall include the following:

(1) Amended water solution.
(2) 6-mil plastic sheeting.
(3) 6-mil plastic asbestos disposal bags.
(4) Disposable rags or wipes.
(5) Duct tape.
(6) Hand tools (chipping hammer, chisel, scraper, putty knife).
(7) Abrasive pads.
(8) Asbestos barrier tape.

NOTE: No power tools, grinders, sanders, or burning apparatus can be used to remove coal tar wrap.

II. Work Procedure

(A) Removal:

The following work procedure shall be employed when removing coal tar wrap:

(1) Set up the asbestos barrier tape around the perimeter of the excavation.
(2) Place 6-mil plastic sheeting under the steel water main pipe to collect loose debris.
(3) Wet down coal tar wrap with amended water.
(4) Use hand tools to break away the large chunks of coal tar wrap. Place the removed wrap in a plastic asbestos disposal bag.
(5) Remove only the amount of wrap around the circumference of the pipe (two (2) foot wide strip) necessary to cut the pipe for future removal.
(6) Ensure that the intact coal tar wrap on the pipe is not damaged when removing the pipe from the excavation.
(7) For sections of pipe left in the ground, seal all ends of exposed wrap with duct tape. Plastic wrap and duct tape all coated pipes that will be removed from the site.
(8) In the event that some wrapping material did not fall onto the plastic sheeting, collect these pieces and place them on the sheeting.
(9) Once coal tar wrap removal is completed and the exposed ends are sealed, fold the plastic sheeting onto itself and place it in a properly labeled asbestos bag.
(10) Wet wipe all equipment with amended water and rags before removal from work area. Place used rags and old work gloves in asbestos disposal bags.
(11) Ensure that bagged ACM is wet prior to transportation.
(12) Cut the pipe at the abated locations using mechanical, cold cutting methods.
(13) Double wrap large sections of cut pipe with intact ACM with two (2) layers of six (6) mil plastic sheeting, sealed with tape in ten (10) foot sections.

(14) Wrapped sections of pipe with intact ACM shall be properly labeled in accordance with OSHA Regulations 29 CFR 1926 58K(2), and shall be kept wet until disposal in compliance with Title 15, Chapter 1, Rules of the City of New York (15RCNY 1).

(B) Disposal:

The following work procedure shall be employed when disposing coal tar wrap:

(1) Double bag all waste materials. The inside and outside bags must have an asbestos label with the work location identified.
(2) Complete an asbestos waste tracking form and attach it to the bag.
(3) Place double bagged waste in a truck and transport it to an approved New York State asbestos landfill.
(4) All ACM waste bags must be picked up and disposed of on a daily basis at the end of each shift.

By signing in the space provided below, the bidder acknowledges receipt of the forty-five (45) pages of this Addendum.

THIS ADDENDUM MUST BE SIGNED BY ALL BIDDERS AND ATTACHED TO THEIR BIDS.

HALCYON CONSTRUCTION CORP.
65 MARBLE AVENUE
PLEASANTVILLE, NEW YORK 10570

Name of Bidder

By:

G. Saini

GURDIP SAINI, P.E.
Associate Commissioner/Design I

CITY OF NEW YORK
DEPARTMENT OF DESIGN AND CONSTRUCTION
DIVISION OF INFRASTRUCTURE

ADDENDA CONTROL SHEET

BID OPENING DATE: JUNE 2, 2016

PROJECT NO.: QED1014

TITLE: REHABILITATION OF EXISTING TRUNK WATER MAINS IN CRESCENT STREET, ETC

ADDENDA ISSUED	No. OF DRAWINGS	DATE
#1: Additional Amendments		04/11/2016
#2: Additional Amendments		04/28/2016
#3: Additional Amendments	18	05/10/2016
#4: Additional Amendments		05/10/2016
#5: Additional Amendments		05/25/2016

ATTACH TO CONTRACT DOCUMENTS

THE CITY OF NEW YORK
DEPARTMENT OF DESIGN AND CONSTRUCTION
INFRASTRUCTURE DIVISION
BUREAU OF DESIGN

PROJECT ID: QED1014

REHABILITATION OF EXISTING TRUNK WATER MAINS IN CRESCENT STREET FROM 34TH AVENUE TO 31ST AVENUE; 31ST AVENUE FROM CRESCENT STREET TO 41ST STREET; AND 41ST STREET FROM 31ST AVENUE TO 25TH AVENUE

INCLUDING DISTRIBUTION WATER MAIN, SEWER AND TRAFFIC SIGNAL WORK

Together With All Work Incidental Thereto

BOROUGH OF QUEENS

ADDENDUM NO. 5

DATED: May 25, 2016

This Addendum is issued for the purpose of amending the requirements of the contract documents and is hereby made part of said contract documents to the same extent as if it was originally included therein.

(1) **Refer** to the Bid and Contract Documents, VOLUME 1 OF 3, "APPRENTICE PROGRAM QUESTIONNAIRE", page 20;
Delete this page in its entirety;
Substitute with revised attached "APPRENTICE PROGRAM QUESTIONNAIRE (APQ)", pages 20 and 20A.

(2) See attached list of QUESTIONS SUBMITTED BY BIDDERS AND RESPONSES PROVIDED BY DDC for additional information.

By signing in the space provided below, the bidder acknowledges receipt of the one (1) page of this Addendum plus three (3) pages of attachments.

THIS ADDENDUM MUST BE SIGNED BY ALL BIDDERS AND ATTACHED TO THEIR BIDS.

HALCYON CONSTRUCTION CORP.
65 MARBLE AVENUE
PLEASANTVILLE, NEW YORK 10570

Name of Bidder

By: _____

for Purnima Dhawa
GURDIP SAINI, P.E.
Associate Commissioner/Design I

QUESTIONS SUBMITTED BY BIDDERS AND RESPONSES PROVIDED BY DDC

QUESTION NO. 1: With reference to Section 60.61, page SW-16, Final Pressure Testing & Recommissioning, is the intent to bulkhead each 52" slip lining run and pressure test individually or pressure test from 48" valve to valve including open cut piping?.

ANSWER NO. 1: As per Section 60.61.8 (E), INSPECTION AND INITIAL TESTING, after the 52" steel pipe liner has been inserted into the existing 60" water main (casing pipe), the 52" steel pipe shall be given a combined pressure and leakage test prior to the grouting process. Temporary bulkheads will be required to test each individual segment.

With reference to Section 60.61.10 FINAL PRESSURE TESTING AND RECOMMISSIONING, the intent is also to final pressure test the pipe from valve to valve for the entire length including pipe installed by the open cut method.

QUESTION NO. 2: With reference to Section 60.61, page SW-12, Low Weight Cement Grout.
After consultation with grouting specialty contractors we request the NYCDDC review the following:

- Can the specified compressive strength of 1000 psi be reduced to 300 psi?
  This will enable a superior flowable mix that may be installed at lower pressures.
- We recommend grout ports be allowed; either factory installed on the 52" liner pipe or field installed on the existing 60" casing pipe. Spacing to be as required by grouting contractor. Completely grouting 900'+ runs with such a tight annular space without intermediate ports will be very difficult.

ANSWER NO. 2: With reference to section 60.61.4 (C)(1) Low Weight Cement Grout, compressive strength shall be 1,000-psi minimum.

Grout ports on 52" liner pipe shall not be permitted. Field installed grouting ports on the existing 60" casing pipe with spacing is to be determined by the grouting specialist/contractor and/or as approved by the Engineer. Prior to the start of construction, the Contractor shall submit construction requirements and grouting procedures to the Engineer for review and approval.

Department of Design and Construction

INFRASTRUCTURE DIVISION
BUREAU OF DESIGN

VOLUME 1 OF 3

PROJECT ID: QED1014

REHABILITATION OF EXISTING TRUNK WATER MAINS IN CRESCENT STREET FROM 34TH AVENUE TO 31ST AVENUE; 31ST AVENUE FROM CRESCENT STREET TO 41ST STREET; AND 41ST STREET FROM 31ST AVENUE TO 25TH AVENUE

INCLUDING DISTRIBUTION WATER MAIN, SEWER AND TRAFFIC SIGNAL WORK

Together With All Work Incidental Thereto
BOROUGH OF QUEENS
CITY OF NEW YORK

_____
Contractor

_____

Dated_____, **20**___

_____

Department of Design and Construction

THE CITY OF NEW YORK
DEPARTMENT OF DESIGN AND CONSTRUCTION
DIVISION OF INFRASTRUCTURE

30-30 THOMSON AVENUE
LONG ISLAND CITY, NEW YORK 11101-3045
TELEPHONE (718) 391-1000
WEBSITE www.nyc.gov/buildnyc

VOLUME 2 OF 3

INFORMATION FOR BIDDERS
CONTRACT
PERFORMANCE AND PAYMENT BONDS
PREVAILING WAGE SCHEDULE

FOR FURNISHING ALL LABOR AND MATERIALS NECESSARY AND REQUIRED FOR:

PROJECT ID: QED1014

REHABILITATION OF EXISTING TRUNK WATER MAINS IN CRESCENT STREET FROM 34TH AVENUE TO 31ST AVENUE; 31ST AVENUE FROM CRESCENT STREET TO 41ST STREET; AND 41ST STREET FROM 31ST AVENUE TO 25TH AVENUE

INCLUDING DISTRIBUTION WATER MAIN, SEWER AND TRAFFIC SIGNAL WORK

Together With All Work Incidental Thereto
BOROUGH OF QUEENS
CITY OF NEW YORK

FOR THE DEPARTMENT OF ENVIRONMENTAL PROTECTION
PREPARED BY
IN-HOUSE DESIGN

DECEMBER 30, 2015

6-104

Department of Design and Construction

THE CITY OF NEW YORK
DEPARTMENT OF DESIGN AND CONSTRUCTION
DIVISION OF INFRASTRUCTURE

30-30 THOMSON AVENUE
LONG ISLAND CITY, NEW YORK 11101-3045
TELEPHONE (718) 391-1000
WEBSITE www.nyc.gov/buildnyc

VOLUME 2 OF 3

INFORMATION FOR BIDDERS
CONTRACT
PERFORMANCE AND PAYMENT BONDS
PREVAILING WAGE SCHEDULE

FOR FURNISHING ALL LABOR AND MATERIALS NECESSARY AND REQUIRED FOR:

FOR THE DEPARTMENT OF ENVIRONMENTAL PROTECTION
PREPARED BY
IN-HOUSE DESIGN

DECEMBER 30, 2015

PAID SICK LEAVE LAW CONTRACT RIDER

Introduction and General Provisions

The Earned Sick Time Act, also known as the Paid Sick Leave Law ("PSLL"), requires covered employees who annually perform more than 80 hours of work in New York City to be provided with paid sick time.[1] Contractors of the City of New York or of other governmental entities may be required to provide sick time pursuant to the PSLL.

The PSLL became effective on April 1, 2014, and is codified at Title 20, Chapter 8, of the New York City Administrative Code. It is administered by the City's Department of Consumer Affairs ("DCA"); DCA's rules promulgated under the PSLL are codified at Chapter 7 of Title 6 of the Rules of the City of New York ("Rules").

Contractor agrees to comply in all respects with the PSLL and the Rules, and as amended, if applicable, in the performance of this agreement. Contractor further acknowledges that such compliance is a material term of this agreement and that failure to comply with the PSLL in performance of this agreement may result in its termination.

Contractor must notify the Agency Chief Contracting Officer of the City agency or other entity with whom it is contracting in writing within ten (10) days of receipt of a complaint (whether oral or written) regarding the PSLL involving the performance of this agreement. Additionally, Contractor must cooperate with DCA's education efforts and must comply with DCA's subpoenas and other document demands as set forth in the PSLL and Rules.

The PSLL is summarized below for the convenience of Contractor. Contractor is advised to review the PSLL and Rules in their entirety. On the website www.nyc.gov/PaidSickLeave there are links to the PSLL and the associated Rules as well as additional resources for employers, such as Frequently Asked Questions, timekeeping tools and model forms, and an event calendar of upcoming presentations and webinars at which Contractor can get more information about how to comply with the PSLL. Contractor acknowledges that it is responsible for compliance with the PSLL notwithstanding any inconsistent language contained herein.

Pursuant to the PSLL and the Rules:

Applicability, Accrual, and Use

An employee who works within the City of New York for more than eighty hours in any consecutive 12-month period designated by the employer as its "calendar year" pursuant to the PSLL ("Year") must be provided sick time. Employers must provide a minimum of one hour of sick time for every 30 hours worked by an employee and compensation for such sick time must

[1] Pursuant to the PSLL, if fewer than five employees work for the same employer, as determined pursuant to New York City Administrative Code §20-912(g), such employer has the option of providing such employees uncompensated sick time.

be provided at the greater of the employee's regular hourly rate or the minimum wage. Employers are not required to provide more than forty hours of sick time to an employee in any Year.

An employee has the right to determine how much sick time he or she will use, provided that employers may set a reasonable minimum increment for the use of sick time not to exceed four hours per day. In addition, an employee may carry over up to forty hours of unused sick time to the following Year, provided that no employer is required to allow the use of more than forty hours of sick time in a Year or carry over unused paid sick time if the employee is paid for such unused sick time and the employer provides the employee with at least the legally required amount of paid sick time for such employee for the immediately subsequent Year on the first day of such Year.

An employee entitled to sick time pursuant to the PSLL may use sick time for any of the following:

- such employee's mental illness, physical illness, injury, or health condition or the care of such illness, injury, or condition or such employee's need for medical diagnosis or preventive medical care;
- such employee's care of a family member (an employee's child, spouse, domestic partner, parent, sibling, grandchild or grandparent, or the child or parent of an employee's spouse or domestic partner) who has a mental illness, physical illness, injury or health condition or who has a need for medical diagnosis or preventive medical care;
- closure of such employee's place of business by order of a public official due to a public health emergency; or
- such employee's need to care for a child whose school or childcare provider has been closed due to a public health emergency.

An employer must not require an employee, as a condition of taking sick time, to search for a replacement. However, an employer may require an employee to provide: reasonable notice of the need to use sick time; reasonable documentation that the use of sick time was needed for a reason above if for an absence of more than three consecutive work days; and/or written confirmation that an employee used sick time pursuant to the PSLL. However, an employer may not require documentation specifying the nature of a medical condition or otherwise require disclosure of the details of a medical condition as a condition of providing sick time and health information obtained solely due to an employee's use of sick time pursuant to the PSLL must be treated by the employer as confidential.

If an employer chooses to impose any permissible discretionary requirement as a condition of using sick time, it must provide to all employees a written policy containing those requirements, using a delivery method that reasonably ensures that employees receive the policy. If such employer has not provided its written policy, it may not deny sick time to an employee because of non-compliance with such a policy.

Sick time to which an employee is entitled must be paid no later than the payday for the next regular payroll period beginning after the sick time was used.

Exemptions and Exceptions

Notwithstanding the above, the PSLL does not apply to any of the following:

- an independent contractor who does not meet the definition of employee under section 190(2) of the New York State Labor Law;
- an employee covered by a valid collective bargaining agreement in effect on April 1, 2014 until the termination of such agreement;
- an employee in the construction or grocery industry covered by a valid collective bargaining agreement if the provisions of the PSLL are expressly waived in such collective bargaining agreement;
- an employee covered by another valid collective bargaining agreement if such provisions are expressly waived in such agreement and such agreement provides a benefit comparable to that provided by the PSLL for such employee;
- an audiologist, occupational therapist, physical therapist, or speech language pathologist who is licensed by the New York State Department of Education and who calls in for work assignments at will, determines his or her own schedule, has the ability to reject or accept any assignment referred to him or her, and is paid an average hourly wage that is at least four times the federal minimum wage;
- an employee in a work study program under Section 2753 of Chapter 42 of the United States Code;
- an employee whose work is compensated by a qualified scholarship program as that term is defined in the Internal Revenue Code, Section 117 of Chapter 20 of the United States Code; or
- a participant in a Work Experience Program (WEP) under section 336-c of the New York State Social Services Law.

Retaliation Prohibited

An employer may not threaten or engage in retaliation against an employee for exercising or attempting in good faith to exercise any right provided by the PSLL. In addition, an employer may not interfere with any investigation, proceeding, or hearing pursuant to the PSLL.

Notice of Rights

An employer must provide its employees with written notice of their rights pursuant to the PSLL. Such notice must be in English and the primary language spoken by an employee, provided that DCA has made available a translation into such language. Downloadable notices are available on DCA's website at http://www.nyc.gov/html/dca/html/law/PaidSickLeave.shtml.

Any person or entity that willfully violates these notice requirements is subject to a civil penalty in an amount not to exceed fifty dollars for each employee who was not given appropriate notice.

Records

An employer must retain records documenting its compliance with the PSLL for a period of at least three years, and must allow DCA to access such records in furtherance of an investigation related to an alleged violation of the PSLL.

Enforcement and Penalties

Upon receiving a complaint alleging a violation of the PSLL, DCA has the right to investigate such complaint and attempt to resolve it through mediation. Within 30 days of written notification of a complaint by DCA, or sooner in certain circumstances, the employer must provide DCA with a written response and such other information as DCA may request. If DCA believes that a violation of the PSLL has occurred, it has the right to issue a notice of violation to the employer.

DCA has the power to grant an employee or former employee all appropriate relief as set forth in New York City Administrative Code 20-924(d). Such relief may include, among other remedies, treble damages for the wages that should have been paid, damages for unlawful retaliation, and damages and reinstatement for unlawful discharge. In addition, DCA may impose on an employer found to have violated the PSLL civil penalties not to exceed $500 for a first violation, $750 for a second violation within two years of the first violation, and $1,000 for each succeeding violation within two years of the previous violation.

More Generous Polices and Other Legal Requirements

Nothing in the PSLL is intended to discourage, prohibit, diminish, or impair the adoption or retention of a more generous sick time policy, or the obligation of an employer to comply with any contract, collective bargaining agreement, employment benefit plan or other agreement providing more generous sick time. The PSLL provides minimum requirements pertaining to sick time and does not preempt, limit or otherwise affect the applicability of any other law, regulation, rule, requirement, policy or standard that provides for greater accrual or use by employees of sick leave or time, whether paid or unpaid, or that extends other protections to employees. The PSLL may not be construed as creating or imposing any requirement in conflict with any federal or state law, rule or regulation.

HIRING AND EMPLOYMENT RIDER:

HIRENYC AND REPORTING REQUIREMENTS

Introduction

This Rider shall apply to all contracts for goods, services, and construction with a value of one million dollars ($1,000,000.00) or more, provided, however, that certain requirements of the Rider shall only apply as indicated below. This Rider addresses the HireNYC process, including reporting obligations under the HireNYC process, and certain other reporting requirements imposed by law. In general, the HireNYC process under this Rider requires the Contractor to enroll with the HireNYC portal for the City of New York ("the City") found within the Department of Small Business Services's ("SBS") website, to disclose all entry to mid-level job opportunities described in this Rider arising from this contract and located in New York City, and to agree to interview qualified candidates from HireNYC for those opportunities.

HireNYC Requirements

A. Enrollment

The Contractor shall enroll with the HireNYC system, found at www.nyc.gov/sbs, within thirty (30) days after the registration of this Contract pursuant to Section 328 of the New York City Charter. The Contractor shall provide information about the business, designate a primary contact and say whether it intends to hire for any entry to mid-level job opportunities arising from this contract and located in New York City, and, if so, the approximate start date of the first hire.

B. Job Posting Requirements

Once enrolled in HireNYC, the Contractor agrees to update the HireNYC portal with all entry to mid-level job opportunities arising from this contract and located in New York City, if any, which shall be defined as jobs requiring no more than an associate degree, as provided by the New York State Department of Labor (see Column F of https://labor.ny.gov/stats/2012-2022-NYS-Employment-Prospects.xls). The information to be updated includes the types of entry and mid-level positions made available from the work arising from the contract and located in New York City, the number of positions, the anticipated schedule of initiating the hiring process for these positions, and the contact information for the Contractor's representative charged with overseeing hiring. The Contractor must update the HireNYC portal with any hiring needs arising from the contract and located in New York City, and the requirements of the jobs to be filled, no less than three weeks prior to the intended first day of employment for each new position, except with the permission of SBS, not to be unreasonably withheld, and must also update the HireNYC portal as set forth below.

After enrollment through HireNYC and submission of relevant information, SBS will work with the Contractor to develop a recruitment plan which will outline the candidate screening process,

and will provide clear instructions as to when, where, and how interviews will take place. HireNYC will screen applicants based on employer requirements and refer applicants whom it believes are qualified to the Contractor for interviews. The Contractor must interview referred applicants whom it believes are qualified.

After completing an interview of a candidate referred by HireNYC, the Contractor must provide feedback via the portal within twenty (20) business days to indicate which candidates were interviewed and hired, if any. In addition, the Contractor shall provide the start date of new hires, and additional information reasonably related to such hires, within twenty (20) business days after the start date. In the event the Contractor does not have any job openings covered by this Rider in any given year, the Contractor shall be required to provide an annual update to HireNYC to that effect. For this purpose, the reporting year shall run from the date of the registration of the contract and each anniversary date.

These requirements do not limit the Contractor's ability to assess the qualifications of prospective workers, and to make final hiring and retention decisions. No provision of this Rider shall be interpreted so as to require the Contractor to employ any particular worker.

In addition, the provisions of this Rider shall not apply to positions that the Contractor intends to fill with employees employed pursuant to the job retention provision of Section 22-505 of the Administrative Code of the City of New York. The Contractor shall not be required to report such openings with HireNYC. However, the Contractor shall enroll with the HireNYC system pursuant to Section A, above, and, if such positions subsequently become open, then the remaining provisions of this Rider will apply.

C. Breach and Liquidated Damages

If the Contractor fails to comply with the terms of the contract and this Rider (1) by not enrolling its business with HireNYC; (2) by not informing HireNYC, as required, of open positions; or (3) by failing to interview a qualified candidate, the contracting agency may assess liquidated damages in the amount of two-thousand five hundred dollars ($2,500.00) per breach. For all other events of noncompliance with the terms of this Rider, the agency may assess liquidated damages in the amount of five hundred dollars ($500) per breach.

Furthermore, in the event the Contractor breaches the requirements of this Rider during the term of the contract, the City may hold the Contractor in default of this contract.

Audit Compliance

In addition to the auditing requirements set forth in other parts of the contract, the Contractor shall permit SBS and the City to inspect any and all records concerning or relating to job openings or the hiring of individuals for work arising from the contract and located in New York City. The Contractor shall permit an inspection within seven (7) business days of the request.

Other Reporting Requirements

The Contractor shall report to the City, on a monthly basis, all information reasonably requested by the City that is necessary for the City to comply with any reporting requirements imposed by law or rule, including any requirement that the City maintain a publicly accessible database. In addition, the Contractor agrees to comply with all reporting requirements imposed by law or rule, or as otherwise requested by the City.

Construction Requirements

Construction contractors shall comply with the HireNYC requirements set forth above for all non-trades jobs (e.g., for an administrative position arising out of the work of the contract and located in New York City) as set forth above.

In addition, construction contractors shall reasonably cooperate with SBS and the City on specific outreach events, including Hire on the Spot events, for the hiring of trades workers for the work of this contract.

Further, this contract shall be subject to a project labor agreement if so required elsewhere in this contract.

Federal Hiring Requirements

The Contractor shall comply with all federal hiring requirements as may be set forth elsewhere in this contract, including, as applicable:

- Section 3 of the HUD Act of 1968, which requires, to the greatest extent feasible, economic opportunities for 30 percent of new hires be given to low- and very low-income persons, particularly persons who are recipients of HUD assistance for housing.
- Executive Order 11246, which prohibits discrimination in employment due to race, color, religion, sex or national origin, and requires the implementation of goals for minority and female participation for work involving any Construction trade.

(NO TEXT ON THIS PAGE)

NOTICE TO BIDDERS

Please be advised that the City of New York has issued a new Standard Construction Contract. The new Contract, which is incorporated in this bid, is significantly different from the 2008 version previously used by the City. A listing of some of the significant changes is provided below. This notice is only a partial listing. Please refer to the Contract itself for a full understanding of the changes and the actual text of the changes that were made. The text of the revised Standard Construction Contract is the controlling document should there be any discrepancies between this notice and the Standard Construction Contract.

Significant changes include the following:

ARTICLE 11 DAMAGES CAUSED BY DELAYS

In 2008, the City embarked on a pilot project to test the use of new construction contract language altering the allocation of the risk of project delays, as between the City and the contractor. The City has determined to make the pilot project language the standard language for all City construction contracts. Accordingly, there is now one Standard City Construction Contract that is to be used by all agencies for all bids released after the release of the new contract. The damages for delay language is Article 11. Please note that changes have been made to the damages for delay provisions from the pilot to the adopted version.

ARTICLE 22 INSURANCE

Changes have been made to the insurance provisions, including incorporating requirements that the insurance provided comply with recent NYC Department of Buildings regulations specifying required dollar limits for CGL insurance for certain projects and requiring proof of builder's risk insurance prior to Work commencing rather than within 10 days of award.

ARTICLE 26 EXTRA WORK

The percentage paid for overhead for Extra Work pursuant to Section 26.1.11 is increased from 10% to 12% and the calculation of Worker's Compensation insurance costs reimbursed for Extra Work has been clarified.

ARTICLE 37 LABOR LAW REQUIREMENTS
ARTICLE 38 PAYROLL REPORTS

The provisions governing Labor Law provisions have been tightened, including requirements the employee identification cards include a photo (unless the requirement is waived), a prohibition on cash payments to employees and subcontractors, and clear enforcement authority requirements.

ARTICLE 70 ELECTRONIC FILING

A provision is added to make mandatory the electronic filing of certain alteration permits with the Department of Buildings.

Other significant changes include the following:

ARTICLE 7 INDEMNIFICATION

Changes have been made to the indemnification provisions.

ARTICLE14 FINAL ACCEPTANCE OF WORK
ARTICLE 44 SUBSTANTIAL COMPLETION PAYMENT

The Commissioner is no longer required to issue a substantial completion determination in addition to the already existing requirement that the Engineer issue a substantial completion determination and reach an agreement on a punch list of remaining work. Now, the Engineer, when issuing the punch list to the Contractor, must also include a proposed schedule for the completion of the punch list. The Contractor may propose an alternative schedule that is subject to the approval of the Engineer. If the Contractor fails to respond to the Engineer's proposed schedule, the Engineer's schedule is deemed accepted.

ARTICLE 15 LIQUIDATED DAMAGES

The contract is revised to match Schedule A to provide that liquidated damages are available only until substantial completion.

ARTICLE 17 SUBCONTRACTS

The requirements for prior approval of subcontractors, and for contractors to be responsible for the actions of their subcontractors, have been tightened. The requirement that the Contractor list subcontractors in the City's Payee Information Portal has been added; the provision was previously attached as a rider.

ARTICLE 19 SECURITY DEPOSIT

The provisions governing the return of bid deposits are clarified.

ARTICLE 20 PAYMENT GUARANTEE

The Payment Guaranty provisions, which apply when the City does not require the Contractor to obtain payment bonds, has been significantly revised to track the requirements of State Finance law 137.

ARTICLE 28 RECORDKEEPING FOR EXTRA OR DISPUTED WORK

The recordkeeping requirement that currently apply to payments for Time & Materials for extra work are expressly made applicable to regular work that is paid for on a T & M basis.

ARTICLE 35 EMPLOYEES

The whistleblower provisions of local law are added to the construction contract. They previously have been attached as a rider.

ARTICLE 38 PAYROLL REPORTS
ARTICLE 77 RECORDS RETENTION

Requirements that records be maintained for six years and directions on how such records must be made available.

ARTICLE 42 PARTIAL PAYMENTS

Increased flexibility has been provided for when contractors may submit invoices.

ARTICLE 62 TAX EXEMPTION

The provisions identifying the State tax exemption for municipalities are revised to more clearly describe State law.

(NO TEXT ON THIS PAGE)

CITY OF NEW YORK

DEPARTMENT OF
DESIGN AND CONSTRUCTION
DIVISION OF INFRASTRUCTURES

INFORMATION FOR BIDDERS

JUNE 2015

(NO TEXT ON THIS PAGE)

CITY OF NEW YORK CITY
DEPARTMENT OF DESIGN AND CONSTRUCTION
INFORMATION FOR BIDDERS

TABLE OF CONTENTS

(NO TEXT ON THIS PAGE)

INFORMATION FOR BIDDERS

1. Description and Location of Work

The description and location of the work for which bids are requested are specified in Attachment 1, "Bid Information". Attachment 1 is included as page A-l of the Bid Booklet.

2. Time and Place for Receipt of Bids

Sealed bids shall be received on or before the date and hour specified in Attachment 1, at which time they will be publicly opened and read aloud in the presence of the Commissioner or his or her representative, and any bidders who may desire to be present.

3. Definitions

The definitions set forth in the Procurement Policy Board Rules shall apply to this Invitation For Bids.

4. Invitation For Bids and Contract Documents

(A) Except for titles, sub-titles, headings, running headlines, tables of contents and indices (all of which are printed herein merely for convenience) the following, except for such portions thereof as may be specifically excluded, shall be deemed to be part of the Contract and the Invitation for Bids.

(1) All provisions required by law to be inserted in this Contract, whether actually inserted or not
(2) The Contract Drawings and Specifications
(3) The General Conditions, the General Requirements and the Special Conditions, if any
(4) The Contract
(5) The Information for Bidders; Request for Proposals; Notice of Solicitation and Proposal For Bids; Bid or Proposal, and, if used, the Bid Booklet
(6) The Budget Director's Certificate; all Addenda issued prior to the receipt of the bids; the Notice of Award; Performance and Payment Bonds, if required; and the Notice to Proceed with the Work.

(B) For particulars as to this procurement, including quantity and quality of the purchase, extent of the work or labor to be performed, delivery and performance schedule, and any other special instructions, prospective bidders are referred to the Invitation For Bids Documents. A copy of such documents can be obtained at the location set forth in Attachment 1.

(C) Deposit for Copy of Invitation For Bids Documents: Prospective bidders may obtain a copy of the Invitation For Bids Documents by complying with the conditions set forth in the Notice of Solicitation. The deposit must be in the form of a check or money order made payable to the City of New York, and drawn upon a state or national bank or trust company, or a check of such bank or trust company signed by a duly authorized officer thereof.

(D) Return of Invitation For Bids Documents: All Invitation For Bids Documents must be returned to the Department upon request. If the bidder elects not to submit a bid thereunder, the

Invitation For Bids Documents shall be returned to the Department, along with a statement that no bid will be submitted.

(E) Return of Deposit: Such deposit will be returned within 30 days after the award of the contract or the rejection of all bids as set forth in the advertisement, provided the Invitation For Bids Documents are returned to the location specified in Attachment 1, in physical condition satisfactory to the Commissioner.

(F) Additional Copies: Additional copies of the Invitation For Bids Documents may be obtained, subject to the conditions set forth in the advertisement for bids.

5. Pre-Bid Conference

A pre-bid conference shall be held as set forth in Attachment 1. Nothing stated at the pre-bid conference shall change the terms or conditions of the Invitation For Bids Documents, unless a change is made by written amendment as provided in Section 9 below. Failure to attend a mandatory pre-bid conference shall constitute grounds for the rejection of the bid.

6. Agency Contact

Any questions or correspondence relating to this bid solicitation shall be addressed to the Agency Contact person specified in Attachment 1.

7. Bidder's Oath

(A) The bid-shall be properly signed by an authorized representative of the bidder and the bid shall be verified by the written oath of the authorized representative who signed the bid, that the several matters stated and information furnished therein are in all aspects true.

(B) A materially false statement willfully or fraudulently made in connection with the bid or any of the forms completed and submitted with the bid may result in the termination of any Contract between the City and the Bidder. As a result, the Bidder may be barred from participating in future City contracts as well as be subject to possible criminal prosecution.

8. Examination and Viewing of Site

(A) Pre-Bidding (Investigation) Viewing of Site -Bidders must carefully view and examine the site of the proposed work, as well as its adjacent area, and seek other usual sources of information, for they will be conclusively presumed to have full knowledge of any and all conditions on, about or above the site relating to or affecting in any way the performance of the work to be done under the Contract which were or should have been indicated to a reasonably prudent bidder. To arrange a date for visiting the work site, bidders are to contact the Agency Contact person specified in Attachment 1.

(B) Should the contractor encounter during the progress of the work subsurface conditions at the site materially differing from any shown on the Contract Drawings or indicated in the Specifications or such subsurface conditions as could not reasonably have been anticipated by the contractor and were not anticipated by the City, which conditions will materially affect the cost of the work to be done under the

Contract, the attention of the Commissioner must be called immediately to such conditions before they are disturbed. The Commissioner shall thereupon promptly investigate the conditions. If he finds that they do so materially differ, or that they could not have been reasonably anticipated by the contractor and were not anticipated by the City, the Contract may be modified with his written approval.

9. Examination of Proposed Contract

(A) Request for Interpretation or Correction: Prospective bidders must examine the Contract Documents carefully and before bidding must request the Commissioner in writing for an interpretation or correction of every patent ambiguity, inconsistency or error therein which should have been discovered by a reasonably prudent bidder. Such interpretation or correction, as well as any additional contract provisions the Commissioner may decide to include, will be issued in writing by the Commissioner as an addendum to the Contract, which will be transmitted to each person recorded as having received a copy of the Contract Documents from the Department. Transmission of such addendum will be by mail, e-mail, facsimile or hand delivery. Such addendum will also be posted at the place where the Contract Documents are available for the inspection of prospective bidders. Upon transmission as provided for herein, such addendum shall become a part of the Contract Documents, and binding on all bidders, whether or not actual notice of such addendum is shown.

(B) Only Commissioner's Interpretation or Correction Binding: Only the written interpretation or correction so given by the Commissioner shall be binding, and prospective bidders are warned that no other officer, agent or employee of the City is authorized to give information concerning, or to explain or interpret, the Contract.

(C) Documents given to a subcontractor for the purpose of soliciting the subcontractor's bid shall include either a copy of the bid cover sheet or a separate information sheet setting forth the project name, the Contract number (if available), the contracting agency and the Project's location.

10. Form of Bid

Each bid must be submitted upon the prescribed form and must contain: a) the name, residence and place of business of the person or persons making the same; b) the names of all persons interested therein, and if no other person is so interested, such fact must be distinctly stated; c) a statement to the effect that it is made without any connection with any other person making a bid for the same purpose and that it is in all respects fair and without collusion or fraud; d) a statement that no Council member or other officer or employee or person whose salary is payable in whole or part from the City Treasury is directly or indirectly interested therein or in the supplies, materials or equipment and work or labor to which it relates, or in any portion of the profits thereof; e) a statement that the bidder is not in arrears to the City or to any agency upon a debt or contract or taxes, and is not a defaulter as surety or otherwise upon any obligation to the City to any agency thereof, except as set forth in the bid.

THE BID SHALL BE TYPEWRITTEN OR WRITTEN LEGIBLY IN INK. THE BID SHALL BE SIGNED IN INK. ERASURES OR ALTERATIONS SHALL BE INITIALED BY THE SIGNER IN INK. FAILURE TO CONFORM TO THE REQUIREMENTS OF THIS SECTION 10 SHALL RESULT IN THE REJECTION OF THE BID.

11. Irrevocability of Bid

The prices set forth in the bid cannot be revoked and shall be effective until the award of the Contract, unless the bid is withdrawn as provided for in Sections 15 and 18 below.

12. Acknowledgment of Amendments

The receipt of any amendment to the Contract Documents shall be acknowledged by the bidder in its bid submission.

13. Bid Samples and Descriptive Literature

Bid samples and descriptive literature shall not be submitted by the bidder, unless expressly requested elsewhere in the Contract or Contract Documents. Any unsolicited bid samples or descriptive literature which are submitted shall not be examined or tested and shall not be deemed to vary any of the provisions of this Contract.

14. Proprietary Information/Trade Secrets

(A) The bidder shall identify those portions of the bid which it deems to be confidential, proprietary information or trade secrets, and provide justification why such materials shall not be disclosed by the City. All such materials shall be clearly indicated by stamping the pages on which such information appears, at the top and bottom thereof with the word "Confidential". Such materials stamped "Confidential" must be easily separable from the non-confidential sections of the bid.

(B) All such materials so indicated shall be reviewed by the Agency and any decision not to honor a request for confidentiality shall be communicated in writing to the bidder. For those bids which are unsuccessful, all such confidential materials shall be returned to the bidder. Prices, makes and model or catalog numbers of the items offered, deliveries, and terms of payment shall be publicly available after bid opening, regardless of any designation of confidentiality made by the bidder.

15. Pre-Opening Modification or Withdrawal of Bids

Bids may be modified or withdrawn by written notice received in the office designated in Attachment 1, before the time and date set for the bid opening. If a bid is withdrawn in accordance with this Section, the bid security, if any, shall be returned to the bidder.

16. Bid Evaluation and Award

In accordance with the New York City Charter, the Procurement Policy Board Rules and the terms and conditions of this Invitation For Bids, this Contract shall be awarded, if at all, to the responsible bidder whose bid meets the requirements and evaluation criteria set forth in the Invitation For Bids, and whose bid price is either the most favorable bid price or, if the Invitation For Bids so states, the most favorable evaluated bid price. A bid may not be evaluated for any requirement or criterion that is not disclosed in the Invitation For Bids.

Restriction: No negotiations with any bidder shall be allowed to take place except under the circumstances and in the manner set forth in Section 21. Nothing in this Section shall be deemed to permit a contract award to a bidder submitting a higher quality item than that designated in the Invitation For Bids, if that bid is not also the most favorable bid.

17. Late Bids, Late Withdrawals and Late Modifications

Any bid received at the place designated in the solicitation after the time and date set for receipt of bids is late and shall not be considered. Any request for withdrawal or modification received at the place designated in the solicitation after the time and date set for receipt of bids is late and shall not be considered. The exception to this provision is that a late modification of a successful bid that makes the bid terms more favorable to the City shall be considered at any time it is received.

18. Withdrawal of Bids.

Except as provided for in Section 15, above, a bidder may not withdraw its bid before the expiration of forty-five (45) days after the date of the opening of bids; thereafter, a bidder may withdraw its bid only in writing and in advance of an actual award. If within sixty (60) days after the execution of the Contract, the Commissioner fails to fix the date for commencement of work by written notice to the bidder, the bidder, at his option, may ask to be relieved of his obligation to perform the work called for by written notice to the Commissioner. If such notice is given to the Commissioner, and the request to withdraw is granted, the bidder waives all claims in connection with this Contract.

19. Mistake in Bids

(A) Mistake Discovered Before Bid Opening: A bidder may correct mistakes discovered before the time and date set for bid opening by withdrawing or correcting the bid as provided in Section 15 above.

(B) Mistakes Discovered Before Award

(1) In accordance with General Municipal Law (Section 103, subdivision 11), where a unilateral error or mistake is discovered in a bid, such bid may be withdrawn upon written approval of the Agency Chief Contracting Officer if the following conditions are met:

(a) The mistake is known or made known to the agency prior to the awarding of the Contract or within 3 days after the opening of the bid, whichever period is shorter; and
(b) The price bid was based upon an error of such magnitude that enforcement would be unconscionable; and
(c) The bid was submitted in good faith and the bidder submits credible evidence that the mistake was a clerical error as opposed to a judgment error; and
(d) The error in the bid is actually due to an unintentional and substantial arithmetic error or an unintentional omission of a substantial quantity of work, labor, material or services made directly in the compilation of the bid, which unintentional arithmetic error or unintentional omission can be clearly shown by objective evidence drawn from inspection of the original work paper, documents, or materials used in the preparation of the bid sought to be withdrawn; and
(e) It is possible to place the agency in the same position as existed prior to the bid.

(2) Unless otherwise required by law, the sole remedy for a bid mistake in accordance with this Article shall be withdrawal of the bid, and the return of the bid bond, or other security, if any, to the bidder. Thereafter, the agency may, in its discretion, award the Contract to the next lowest bidder or rebid the Contract. Any amendment to or reformation of a bid or a Contract to rectify such an error or mistake

therein is strictly prohibited.

(3) If the mistake and the intended correct bid are clearly evident on the face of the bid document, the bid shall be corrected to the intended correct bid and may not be withdrawn. Examples of mistakes that may be corrected are typographical errors, errors in extending unit prices, transposition errors and arithmetical errors.

20. Low Tie Bids

(A) When two or more low responsive bids from responsible bidders are identical in price, meeting all the requirements and criteria set forth in the Invitation For Bids, the Agency Chief Contracting Officer will break the tie in the following manner and order of priority:

(1) Award to a certified New York City small, minority or woman-owned business entity bidder;
(2) Award to a New York City bidder;
(3) Award to a certified New York State small, minority or woman-owned business bidder;
(4) Award to a New York State bidder.

(B) If two or more bidders still remain equally eligible after application of paragraph (A) above, award shall be made by a drawing by lot limited to those bidders. The bidders involved shall be invited to attend the drawing. A witness shall be present to verify the drawing and shall certify the results on the bid tabulation sheet.

21. Rejection of Bids

(A) Rejection of Individual Bids: The Agency may reject a bid if:

(1) The bidder fails to furnish any of the information required pursuant to Section 24 or 28 hereof; or if
(2) The bidder is determined to be not responsible pursuant to the Procurement Policy Board Rules; or if
(3) The bid is determined to be non-responsive pursuant to the Procurement Policy Board Rules; or if
(4) The bid, in the opinion of the Agency Chief Contracting Officer, contains unbalanced bid prices and is thus non-responsive, unless the bidder can show that the prices are not unbalanced for the probable required quantity of items, or if the imbalance is corrected pursuant to Section 15.

(B) Rejection of All Bids: The Agency, upon written approval by the Agency Chief Contracting Officer, may reject all bids and may elect to resolicit bids if in its sole opinion it shall deem it in the best interest of the City so to do.

(C) Rejection of All Bids and Negotiation With All Responsible Bidders: The Agency Head may determine that it is appropriate to cancel the Invitation For Bids after bid opening and before award and to complete the acquisition by negotiation. This determination shall be based on one of the following reasons:

(1) All otherwise acceptable bids received are at unreasonable prices, or only one bid is received and the Agency Chief Contracting Officer cannot determine the reasonableness of the bid price, or no responsive bid has been received from a responsible bidder; or

(2) In the judgment of the Agency Chief Contracting Officer, the bids were not independently arrived at in open competition, were collusive, or were submitted in bad faith.

(D) When the Agency has determined that the Invitation for Bids is to be canceled and that use of negotiation is appropriate to complete the acquisition, the contracting officer may negotiate and award the Contract without issuing a new solicitation, subject to the following conditions:

(1) prior notice of the intention to negotiate and a reasonable opportunity to negotiate have been given by the contracting officer to each responsible bidder that submitted a bid in response to the Invitation for Bids;

(2) the negotiated price is the lowest negotiated price offered by a responsible bidder; and

(3) the negotiated price is lower than the lowest rejected bid price of a responsible bidder that submitted a bid in response to the Invitation for Bids.

22. Right to Appeal Determinations of Non-Responsiveness or Non-Responsibility and Right to Protest Solicitations and Award

The bidder has the right to appeal a determination of non-responsiveness or non-responsibility and has the right to protest a solicitation and award. For further information concerning these rights, the bidder is directed to the Procurement Policy Board Rules.

23. Affirmative Action and Equal Employment Opportunity

This Invitation For Bids is subject to applicable provisions of Federal, State and Local Laws and executive orders requiring affirmative action and equal employment opportunity.

24. VENDEX Questionnaires

(A) Requirement: Pursuant to Administrative Code Section 6-116.2 and the PPB Rules, bidders may be obligated to complete and submit VENDEX Questionnaires. Generally, if this bid is $100,000 or more, or if this bid when added to the sum total of all contracts, concessions and franchises the bidder has received from the City and any subcontracts received from City contractors over the past twelve months, equals or exceeds $100,000, Vendex Questionnaires must be completed. If required, Vendex Questionnaires must be completed and submitted before any award of contract may be made or before approval is given for a proposed subcontractor. Non-compliance with these submission requirements may result in the disqualification of the bid, disapproval of a subcontractor, subsequent withdrawal of approval for the use of an approved subcontractor, or the cancellation of the contract after its award.

(B) Submission: Vendex Questionnaires must be submitted directly to the Mayor's Office of Contract Services, ATTN: Vendex, 253 Broadway, 9th Floor, New York, New York 10007. In addition, the bidder must submit a Confirmation of Vendex Compliance to the agency. A form for this confirmation is set forth in the Bid Booklet.

(C) Obtaining Forms: Vendex Questionnaires, as well as detailed instructions, may be obtained at www.nyc.gov/vendex. The bidder may also obtain Vendex forms and instructions by contacting the

Agency Chief Contracting Office or the contract person for this contract.

25. Complaints About the Bid Process

The New York City Comptroller is charged with the audit of contracts in New York City. Any vendor who believes that there has been unfairness, favoritism or impropriety in the bid process should inform the Comptroller, Office of Contract Administration, One Centre Street, Room 835, New York, New York; telephone number (212)669-2797.

26. Bid, Performance and Payment Security

(A) Bid Security: Each bid must be accompanied by bid security in an amount and type specified in Attachment 1 (page A-1 of the Bid Booklet). The bid security shall assure the City of New York of the adherence of the bidder to its proposal, the execution of the Contract, and the furnishing of Performance and Payment Bonds by the bidder, if required in Attachment 1. Bid security shall be returned to the bidder as follows:

(1) Within ten (10) days after the bid opening, the Comptroller will be notified to return the deposits of all but the three (3) lowest bidders. Within five (5) days after the award, the Comptroller will be notified to return the deposits of the remaining two unsuccessful bidders.
(2) Within five (5) days after the execution of the Contract and acceptance of the Contractor's bonds, the Comptroller will be notified to return the bid security of the successful bidder or, if performance and payment bonds are not required, only after the sum retained under Article 21 of the Contract equals the amount of the bid security.
(3) Where all bids are rejected, the Comptroller will be notified to return the deposit of the three (3) lowest bidders at the time of rejection.

(B) Performance and Payment Security: Performance and Payment Security must be provided in an amount and type specified in Attachment 1 (page A-1 of the Bid Booklet). The performance and payment security shall be delivered by the contractor prior to or at the time of execution of the Contract. If a contractor fails to deliver the required performance and payment security, its bid security shall be enforced, and an award of Contract may be made to the next lowest responsible and responsive bidder, or the contract may be rebid.

(C) Acceptable Types of Security: Acceptable types of security for bids, performance, and payment shall be limited to the following:

(1) a one-time bond in a form satisfactory to the City;
(2) a bank certified check or money order;
(3) obligations of the City of New York; or
(4) other financial instruments as determined by the Office of Construction in consultation with the Comptroller.

Whenever the successful bidder deposits obligations of the City of New York as performance and payment security, the Comptroller may sell and use the proceeds thereof for any purpose for which the principal or surety on such bond would be liable under the terms of the Contract. If the money is deposited with the Comptroller, the successful bidder shall not be entitled to receive interest on such money from the City.

(D) Form of Bonds: Security provided in the form of bonds must be prepared on the form of bonds authorized by the City of New York. Forms for bid, performance, and payment bonds are included in the Invitation for Bids Documents. Such bonds must have as surety thereunder such surety company or companies as are: (I) approved by the City of New York; (2) authorized to do business in the State of New York, and (3) approved by the Department of the Treasury of the United States. Premiums for any required bonds must be included in the base bid.

The bidder is advised that submission of a bid bond where the surety on such bond fails to meet the criteria set forth herein, shall result in the rejection of the bid as non-responsive.

The Department of the Treasury of the United States advises that information concerning approved surety companies may be obtained as follows: (1) from the Government Printing Office at 202-512-1800; (2) through the Internet at http://www.fms.treas.gov/c570/index.html, and (3) through a computerized public bulletin board, which can be accessed by using your computer modem and dialing 202-874-6887.

(E) Power of Attorney: Attorneys in fact who sign bid, performance, or payment bonds must file with each bond a certified copy of their power of attorney to sign said bonds.

27. Failure to Execute Contract

In the event of failure of the successful bidder to execute the Contract and furnish the required security within ten (10) days after notice of the award of the Contract, the deposit of the successful bidder or so much thereof as shall be applicable to the amount of the award made shall be retained by the City, and the successful bidder shall be liable for and hereby agrees to pay on demand the difference between the price bid and the price for which such Contract shall be subsequently awarded, including the cost of any required reletting and less the amount of such deposit. No plea of mistake in such accepted bid shall be available to the bidder for the recovery of the deposit or as a defense to any action based upon such accepted bid. Further, should the bidder's failure to comply with this Section cause any funding agency, body or group (Federal, State, City, Public, Private, etc.) to terminate, cancel or reduce the funding on this project, the bidder in such event shall be liable also to the City for the amount of actual funding withdrawn by such agency on this project, less the amount of the forfeited deposit.

28. Bidder Responsibilities and Qualifications

(A) Bidders must include with their bids all information necessary for a determination of bidder responsibility, as set forth in the Specifications.

(B) The Agency may require any bidder or prospective bidder to furnish all books of account, records, vouchers, statements or other information concerning the bidder's financial status for examination as may be required by the Agency to ascertain the bidder's responsibility and capability to perform the Contract. If required, a bidder must also submit a sworn statement setting forth such information as the Agency may require concerning present and proposed plant and equipment, the personnel and qualifications of his working organizations, prior experience and performance record.

(C) Oral Examination on Qualifications: In addition thereto, and when directed by the Agency, the bidder, or a responsible officer, agent or employee of the bidder, must submit to an oral examination to be conducted by the Agency in relation to his proposed tentative plan and schedule of

operations, and such other matters as the Agency may deem necessary in order to determine the bidder's ability and responsibility to perform the work in accordance with the Contract. Each person so examined must sign and verify a stenographic transcript of such examination noting thereon such corrections as such person may desire to make.

(D) If the bidder fails or refuses to supply any of the documents or information set forth in paragraph (B) hereof or fails to comply with any of the requirements thereof, the Agency may reject the bid.

29. Employment Report

In accordance with Executive Order No. 50 (1980) as modified by Executive Order 108 (1986), the filing of a completed Employment Report (ER) is a requirement of doing business with the City of New York for construction contractors with contracts of $1,000,000 or more and subcontractors with construction subcontracts of $750,000 or more. The required forms and information are included in the Bid Booklet.

30. Labor Law Requirements

(A) General: The successful bidder will be required to comply strictly with all Federal, State and local labor laws and regulations.

(B) New York State Labor Law: This Contract is subject to New York State Labor Law Section 220, which requires that construction workers on the site be paid prevailing wages and supplements. The Contractor is reminded that all wage provisions of this Contract will be enforced strictly and failure to comply will be considered when evaluating performance. Noncompliance may result in the contractor being debarred by the City from future contracts. Complaints filed with the Comptroller may result in decisions which may debar a contractor from bidding contracts with any state governmental entity and other political subdivisions.

(C) Records: The Contractor is expected to submit accurate payroll reports and other required documents and verify attendance and job classifications being utilized in compliance with the law, Contract provisions and agency procedures.

31. Insurance

(A) Bidders are advised that the insurance requirements contained herein are regarded as material terms of the Contract. As required by Article 22 of the Contract, the contractor must effect and maintain with companies licensed and authorized to do business in the State of New York, the types of insurance set forth therein, when required by and in the amounts set forth in Schedule A of the General Conditions. Such required insurance must be provided from the date the contractor is ordered to commence work and up to the date of final acceptance of all required work.

(B) The contractor must, within ten days of receipt of the notice of award, submit the following insurance documentation: (a) original certificate of insurance for general liability in the amount required by Schedule A of the General Conditions, and (b) original certificates of insurance or other proof of coverage for workers' compensation and disability benefits, as required by Section 57 of the New York State Workers' Compensation Law and Section 220 of the Disability Benefits Law.

32. Lump Sum Contracts

(A) Comparison of Bids: Bids on Lump Sum Contracts will be compared on the basis of the lump sum price bid, adjusted for alternate prices bid, if any.

(B) Lump Sum Bids for "General Construction Work" which include excavation shall include all necessary excavation work defined in the Specifications as being included in the lump sum bid. The bidder shall also bid a unit price for the additional cost of excavating material which is defined in the Specifications as excavation for which additional payment will be made. The total estimated additional cost of removing such material will be taken as the quantity set forth in the Engineer's Estimate multiplied by the unit price bid. This total estimated cost of additional excavation shall be added to the lump sum bid for the General Construction Work for the purpose of comparing bids to determine the low bidder.

(C) Variations from Engineer's Estimate: The Engineer's Estimate of the quantity of excavation for which additional payment will be made is approximate only and is given solely to be used as a uniform basis for the comparison of bids and such estimate is not to be considered as part of this contract. The quantities actually required to complete the contract work may be more or less than the quantities in the Engineer's Estimate and, if so, no action for damages or for loss of profits shall accrue to the contractor by reason thereof.

33. Unit Price Contracts

(A) Comparison of Bids: Bids on Unit Price Contracts will be compared on the basis of a total estimated price, arrived at by taking the sum of the estimated quantities of such items, in accordance with the Engineer's Estimate of Quantities set forth in the Bid Schedule, multiplied by the corresponding unit prices, and including any lump sum bids on individual items.

(B) Variations from Engineer's Estimate: Bidders are warned that the Engineer's Estimate of Quantities on the various items of work and materials is approximate only, given solely to be used as a uniform basis for the comparison of bids, and is not be considered part of this contract. The quantities actually required to complete the contract work may be less or more than so estimated, and if so, no action for damages or for loss of profits shall accrue to the contractor by reason thereof.

(C) Overruns: The terms and conditions applicable to overruns of unit price items are set forth in Article 26 of the Contract.

34. Excise Tax

Bidders are referred to the Specifications for information on Federal Excise Tax exemptions.

35. Licenses and Permits

The successful bidder will be required to obtain all necessary licenses and permits necessary to perform the work.

36. Multiple Prime Contractors

If more than one prime contractor will be involved on this project, all contractors are required to examine the Invitation for Bid packages for all other parts of the project.

37. Locally Based Enterprise Requirements (LBE)

This Contract is subject to the requirements of Administrative Code, Section 6-108.1, and the regulations promulgated thereunder. No construction contract will be awarded unless and until these requirements have been complied with in their entirety. The bidder is advised of the provisions set forth below, as well as the provisions with respect to the Locally Based Enterprise Program contained in Article 67 of the Contract. The contractor is advised that:

(A) If any portion of the Contract is subcontracted, not less than ten percent of the total dollar amount of the contract shall be awarded to locally based enterprises ("LBEs"); except, where less than ten percent of the total dollar amount of the Contract is subcontracted, such lesser percentage shall be so awarded.

(B) No contractor shall require performance and payment bonds from LBE subcontractors.

(C) No Contract shall be awarded unless the contractor first identifies in its bid:

(1) the percentage, dollar amount and type of work to be subcontracted; and
(2) the percentage, dollar amount and type of work to be subcontracted to LBEs.

(D) Within ten calendar days after notification of low bid, the apparent low bidder shall submit an "LBE Participation Schedule" to the contracting agency. If such schedule does not identify sufficient LBE subcontractors to meet the requirements of Administrative Code Section 6-108.1, the apparent low bidder shall submit documentation of its good faith efforts to meet such requirements.

(1) The "LBE Participation Schedule" shall include:

(a) the name and address of each LBE that will be given a subcontract,
(b) the percentage, dollar amount and type of work to be subcontracted to the LBE, and
(c) the dates when the LBE subcontract work will commence and end.

(2) The following documents shall be attached to the "LBE Participation Schedule":

(a) verification letters from each subcontractor listed in the "LBE Participation Schedule" stating that the LBE will enter into a formal agreement for work,
(b) certification documents of any proposed LBE subcontractor which is not on the LBE certified list, and
(c) copies of the certification letter of any proposed subcontractor which is an LBE.

(3) Documentation of good faith efforts to achieve the required LBE percentage shall include as appropriate but not limited to the following:

(a) attendance at prebid meetings, when scheduled by the agency, to advise bidders of contract requirements;

(b) advertisement where appropriate in general circulation media, trade association publications and small business media of the specific subcontracts that would be at least equal to the percentage goal for LBE utilization specified by the contractor;

(c) written notification to association of small, minority and women contractors soliciting specific subcontractors;

(d) written notification by certified mail to LBE firms that their interest in the contract is solicited for specific work items and their estimated values;

(e) demonstration of efforts made to select portions of the work for performance by LBE firms in order to increase the likelihood of achieving the stated goal;

(f) documented efforts to negotiate with LBE firms for specific subcontracts, including at a minimum:

(i) The names, address and telephone numbers of LBE firms that are contacted;

(ii) A description of the information provided to LBE firms regarding the plans and specifications for portions of the work to be performed;

(iii) Documentation showing that no reasonable price can be obtained from LBE firms;

(iv) A statement of why agreements with LBE firms were not reached;

(g) a statement of the reason for rejecting any LBE firm which the contractor deemed to be unqualified; and

(h) documentation of efforts made to assist the LBE firms contacted that needed assistance in obtaining required insurance.

(E) Unless otherwise waived by the Commissioner with the approval of the Office of Economic and Financial Opportunity, failure of a proposed contractor to provide the information required by paragraphs (C) and (D) above may render the bid non-responsive and the Contract may not be awarded to the bidder. If the contractor states that it will subcontract a specific portion of the work, but can demonstrate despite good faith efforts it cannot achieve its required LBE percentage for subcontracted work until after award of Contract, the Contract may be awarded, subject to a letter of compliance from the contractor stating that it will comply with Administrative Code Section 6-108.1 and subject to approval by the Commissioner. If the contractor has not met its required LBE percentage prior to award, the contractor shall demonstrate that a good faith effort has been made subsequent to award to obtain LBEs on each subcontract until its meets the required percentage.

(F) When a bidder indicates prior to award that no work will be subcontracted, no work may be subcontracted without the prior written approval of the Commissioner, which shall be granted only if the contractor in good faith seeks LBE subcontractors at least six weeks prior to the start of work.

(G) The contractor may not substitute or change any LBE which was identified prior to award of the contract without the written permission of the Commissioner. The contractor shall make a written application to the Commissioner for permission to make such substitution or change, explaining why the contractor needs to change its LBE subcontractor and how the contractor will meet its LBE subcontracting requirement. Copies of such application must be served on the originally identified LBE by certified mail return receipt requested, as well as the proposed substitute LBE. The Commissioner shall determine whether or not to grant the contractor's request for substitution.

38. <u>Bid Submission Requirements</u>

The following forms, all of which are contained in the Bid Booklet, are to be completed and submitted with the bid:

(1) Bid Schedule and Bid Form, including Affirmation
(2) Bid Security (if required, see Attachment 1 on Page A-1)
(3) M/WBE Subcontactor Utilization Plan (if participation goals have been established)

FAILURE TO SUBMIT ITEMS (1), (2) AND (3)
WILL RESULT IN THE DISQUALIFICATION OF THE BID.

(4) Safety Questionnaire
(5) Construction Employment Report (if bid is $1,000,000 or more)
(6) Contract Certificate (if bid is less than $1,000,000)
(7) Confirmation of Vendex Compliance
(8) Special Experience Requirements (if applicable to this contract)
(9) Apprenticeship Program Questionnaire (if applicable)

FAILURE TO SUBMIT ITEMS (4) THROUGH (9)
MAY RESULT IN THE DISQUALIFICATION OF THE BID.

39. Comptroller's Certificate

This Contract shall not be binding or of any force unless it is registered by the Comptroller in accordance with Section 328 of the City Charter and the Procurement Policy Board Rules. This Contract shall continue in force only after annual appropriation of funds by the City of New York and certification as hereinabove set forth.

40. Procurement Policy Board Rules

This Invitation For Bids is subject to the Rules of the Procurement Policy Board of the City of New York. In the event of a conflict between said Rules and a provision of this Invitation For Bids, the Rules shall take precedence.

41. DDC Safety Requirements

The DDC Safety Requirements apply to the work to be performed pursuant to the Contract. The DDC Safety Requirements are set forth on the following pages.

CITY OF NEW YORK

DEPARTMENT OF DESIGN AND CONSTRUCTION

SAFETY REQUIREMENTS

June 2015

THE DDC SAFETY REQUIREMENTS INCLUDE THE FOLLOWING SECTIONS:

I. POLICY ON SITE SAFETY

The City of New York Department of Design and Construction (DDC) is committed to a policy of injury and illness prevention and risk management for construction work that will ensure the safety and health of the workers engaged in the projects and the protection of the general public. Therefore, it is DDC's policy that work carried out by Contractors on DDC jobsites must, at a minimum, comply with applicable federal, state and city laws, rules and regulations, including without limitation:

- U. S. Department of Labor 29 Code of Federal Regulations (CFR) Part 1926 and applicable Sub-parts of Part 1910 – U.S. Occupational Safety and Health Administration (OSHA); New York State Department of Labor Industrial Code Rule 23 – Protection in Construction, Demolition and Excavation;
- New York City Construction Codes, Title 28
- NYC Department of Transportation Title 34 Chapter 2 – Highway Rules
- New York State Department of Labor Industrial Code Rule 16 NYCRR Part 753
- Title 15 of the Rules of the City of New York, Chapter 13 Citywide Construction Dust Mitigation
- Manual on Uniform Traffic Control Devices (MUTCD)
- Title 15 of the Rules of the City of New York, Chapter 28 Citywide Construction Noise Mitigation

II. PURPOSE

The purpose of this policy is to ensure that Contractors perform their work and supervise their employees in accordance with all applicable federal, state and city rules and regulations. Further, Contractors will be expected to minimize or eliminate jobsite and public hazards, through a planning, inspection, auditing and corrective action process. The goal is to control risks so that injuries, illnesses and accidents to contractors' employees, DDC employees and the general public, as well as damage to city-owned and private property, are reduced to the lowest level feasible.

III. DEFINITIONS

Agency Chief Contracting Officer (ACCO): The ACCO shall mean the person delegated authority by the Commissioner to organize and supervise the procurement activity of subordinate Agency staff in conjunction with the CCPO.

Competent Person: As defined by OSHA, an individual who is capable of identifying existing and predictable hazards in the surroundings or working conditions that are unsanitary, hazardous, or dangerous to employees or the general public, and who has authorization to take prompt corrective measures to eliminate them.

Construction Safety Auditor: A representative of the QA&CS Construction Safety Unit who provides inspection and assessment services to enhance health and safety on all DDC construction projects. The activities of the Construction Safety Auditor include performing site surveys, reviewing health and safety plans, reviewing construction permits, and rendering technical advice and assistance to DDC Resident Engineers and Project Managers.

Construction Safety Unit: A part of QA&CS within the Division of Program Management/ Safety & Site Support that assesses contractor safety on DDC jobsites and advises responsible parties of needed corrective actions.

Construction Superintendent: A representative of the contractor responsible for overseeing performance of the required construction work. This individual must engage in sound construction practices, and is responsible to maintain a safe work site. In the case of a project involving the demolition, alteration or new construction of buildings, the Construction Superintendent must be licensed by the NYC Department of Buildings.

Contractor: For purposes of these Safety Requirements, the term "Contractor" shall mean any person or entity that enters into a contract for the performance of construction work on a DDC project. The term "Contractor" shall include any person or entity which enters into any of the following types of contracts: (1) a prime construction contract for a specific project, (2) a prime construction contract using the Job Order Contracting System ("JOCS Contract"), and (3) a subcontract with a CM/Builder ("First Tier Subcontract").

Daily Safety Job Briefing: Daily jobsite safety meetings, giving to all jobsite personnel by contractor, with the purpose of discussing project specific safety procedures for the scheduled construction work.

Director - Quality Assurance and Construction Safety (QA&CS): Responsible for the operations of the QACS Construction Safety Unit and the DDC Site Safety management programs.

Job Hazard Analysis (JHA): A process of identifying the major job steps and any potential site-specific hazards that may be present during construction and establishing the means and methods to eliminate or control those hazards.

Qualified Person: As defined by OSHA, an individual who, by possession of a recognized degree, certificate, license or professional standing, or who by extensive knowledge, training, and experience, has successfully demonstrated his or her ability to solve problems relating to the subject matter, the work, or the project. Qualified Persons are required under regulation to address issues pertaining, but without limit, to fall protection, scaffold design and trenching and shoring, among others.

Project Site: Those areas indicated in the Contract Documents where the Work is to be performed.

Project Safety Representative: The designated project safety representative shall have completed an authorized 30 hour OSHA Construction Safety Course and other safety training applicable to Contractor's/subcontractor's project work. Except in instances where a dedicated Project Safety Manager is required, a Project Safety Representative may also function as a superintendent, foreman or crew leader on the Project, but must have sufficient experience and authority to undertake corrective actions and must qualify to be a competent person. No work is to be performed on site when a Project Safety Representative is not present.

Project Safety Manager: A dedicated, full-time project safety manager may be a contractual requirement on large projects or projects deemed by DDC to be particularly high risk. This would be in addition or in lieu of a Contractor's Project Safety Representative. This individual shall not have any other assigned duties. This individual shall have received, at a minimum an authorized 30 hour OSHA Construction Safety Course. Other examples of acceptable training are OSHA Safety and Health Standards for the Construction Industry training program (OSHA 510), Certified Safety Professional (CSP), Certified Industrial Hygienist (CIH) or a degree/certificate in a safety and health from a college-level curriculum.
A Project Safety Manager shall possess the additional training, years of experience, and skills necessary to thoroughly understand the health and safety hazards and controls for large construction projects, including the full scope of the specific Work.

QA&CS – Quality Assurance and Construction Safety of the New York City Department of Design and Construction.

Resident Engineer (RE) / Construction Project Manager (CPM): Representative of the Commissioner duly designated by the Commissioner to be his/her representative at the site of the work. (The RE/CPM may be a third-party consultant, including a Construction Management firm, retained by DDC)

Safety Program: Established by the Contractor that covers all operations of that Contractor and establishes the Contractor's overall safety policy, regulatory compliance plan and minimum safety standards. The Safety Program must be submitted prior to the commencement of work at the site and is subject to review and acceptance by the Construction Safety Unit.

Safety Questionnaire: Used by DDC to evaluate Contractor's current and past safety performance. It is required to be completed by all Contractors initially when submitting bids for Construction work, or when being pre-qualified and updated annually or as requested by the DDC.

Site Safety Manager: For certain projects, as defined in NYC Construction Codes – Title 28, the Contractor shall provide a Site Safety Manager with a Site Safety Manager License issued by the NYC Department of Building.

Site Safety Plan: A site-specific safety plan developed by the Contractor for a specific project. The Site Safety Plan must identify hazards associated with the project, and include specific safety procedures and training appropriate and necessary to complete the work. The Site Safety Plan must be submitted prior to the commencement of work at the site and is subject to review and acceptance by the Construction Safety Unit.

Unsafe or Unhealthy Condition: A condition that could be potentially hazardous to the health and safety of personnel or the public, and/or damaging to equipment, machinery, property or the environment.

Weekly Safety Meetings: Weekly documented jobsite safety meetings, given to all jobsite personnel by contractor, with the purpose of discussing general safety topics and job specific requirements encountered at the DDC work site.

Work: The construction required by the Contract Documents whether completed or partially completed, performed by the Contractor/ subcontractors. Work refers to the furnishing of labor, furnishing and incorporating materials and equipment into the construction and providing any service required by the Contract Documents to fulfill the Contractor's obligation to complete the Project.

IV. RESPONSIBILITIES

All persons who manage, perform, and provide support for construction projects shall conduct operations in compliance with the requirements identified in this Policy and all applicable governing regulatory agency requirements and guidelines pertaining to safety in construction.

A. DDC or CM Resident Engineer / Construction Project Manager

- Monitors the issuance of safety- related permits, approvals and drawings and maintains copies on site.
- Monitors construction-related work activities to confirm that they are conducted in accordance with DDC policies and all applicable regulations that pertain to construction safety.
- Maintains documentation and periodically attends weekly safety meetings and daily safety job briefings.
- Notifies the Construction Safety Unit and the ACCO's Insurance and Risk Management Unit of project- related accidents and emergencies, as per DDC's Construction Safety Emergency and Accident Notification and Response Protocol.
- Gathers facts related to all accidents and prepares DDC Construction Accident Report.

- Notifies the Construction Safety Unit within two (2) hours of the start of an inspection by any outside regulatory agency personnel, including OSHA, NYC DOB or others and forwards a copy of the inspection report within three days of its receipt.
- Monitors the conditions at the site for conformance with the contractor's Site Safety Plan and DDC construction documents.
- Notifies the contractor and DDC in the event that any condition or activity exists that is not in compliance with the contractor's Site Safety Plan, applicable federal, state or local codes or any condition that presents a potential risk of injury to the public or workers or possible damage to property.
- Notifies DDC of any unsafe or unhealthy condition and directs the contractor to provide such labor, materials, equipment and supervision to abate such conditions.
- Escort and assist QA&CS Construction Safety Auditors during the field and record inspections.
- Reports emergency conditions to the Construction Safety Unit immediately.

B. Contractors

- Submit a completed Safety Questionnaire and other safety performance related documentation with its bid or as part of a pre-qualification package.
- Complete a written Job Hazard Analysis (JHA) that identifies safety hazards for project specific work tasks and hazard control methods. A written JHA shall be available at the site for reference and included in the Site Safety Plan submitted by the contractor.
- Submit a Site Safety Plan and Safety Program within 30 days from the Award Date or as otherwise directed. The Site Safety Plan and Safety Program are subject to review and acceptance by the Construction Safety Unit prior to the commencement of work at the site. The Site Safety Plan shall be revised and updated as necessary.
- Develop project specific safety procedures to protect general public during all construction activities for the duration of the project.
- Ensure that all employees are aware of the hazards associated with the project through documented formal and informal training and/or other communications. Conduct and document weekly safety meetings and daily job briefing sessions for the duration of the project. Documentation to be provided to the RE/CPM on a monthly basis.
- Name the Project Safety Representative and Project Safety Manager, if required. The Contractor will be required to identify the Project Safety Representative and Project Safety Manager in the Site Safety Plan. Resumes, outlining the qualification and experience for the Project Safety Representative and Project Safety Manager, shall be available upon request. DDC reserves the right to request that the Contractor replace any Project Safety Representative or Project Safety Manager for any reason at any time during the project.
- Name a Competent Person(s), The Contractor will be required to identify a Competent Person(s) in the Site Safety Plan.
- Comply with all mandated federal, state and local safety and health rules and regulations.
- Comply with all provisions of the Site Safety Plan.
- Conduct applicable safety training prior to the commencement of work at the site. All training records (OSHA 10-hour, flagger, scaffold, fall protection, confined space entry, etc.) shall be provided to the RE/CPM prior to mobilization, included in the Site Safety Plan, kept current during the course of the project, and available for review. Prior to performing any work on DDC project all employees shall have successfully completed, within the previous five calendar years, a 10 Hour OSHA construction safety course.
- As part of the Site Safety Plan, prepare a site specific programs and plans, such as MPT plan, steel erection plan, confined space program, fall protection plan, demolition plan, etc. (if not otherwise provided in the contract documents) and comply with all of its provisions.
- Conduct and document site-specific safety orientation for Contractor personnel to review the hazards associated with the project as identified in the Site Safety Plan and the specific safety procedures and

controls that will be used to protect workers, the general public and property. The Project Safety Representative and/or Project Safety Manager will conduct this training prior to mobilization and provide documentation to the RE/CPM.

- Provide, replace and adequately maintain at or around the project site, suitable and sufficient signage, lights, barricades and enclosures (fences, sidewalk sheds, netting, bracing, etc.).
- Report unsafe or unhealthy conditions to the RE/CPM as soon as practical, but no more than 24 hours after discovery, and take prompt actions to remove or abate such conditions.
- Report any accidents involving injuries to workers or the general public, as well as property damage, to the RE/CPM within one (1) hour.
- Following an accident, the Contractor shall not remove or alter any equipment, structure, material, or evidence related to the accident. Exception: Immediate emergency procedures taken to secure structures, temporary construction, operations, or equipment that pose a continued imminent danger or facilitate assistance for persons who are trapped or who have sustained bodily injury.
- Notify the RE/CPM within one (1) hour of the start of an inspection by any outside regulatory agency personnel, including OSHA, NYC DOB or others.
- Maintain all records pertaining to all required compliance documents and accident and injury reports.
- Address DDC recommendations on safety, which shall in no way relieve the Contractor of its responsibilities for safety on the project. The Contractor has sole responsibility for safety.

V. SAFETY QUESTIONNAIRE

DDC requires that all Contractors provide information regarding their current and past safety performance and programs. This will be accomplished by the use of the DDC Safety Questionnaire. As a part of the bid submittal package, the contractor must submit a completed DDC Safety Questionnaire listing company workers' compensation experience modification rating and OSHA Incident Rates for the three (3) years prior to the date of the bid opening. DDC may request a Contractor to update its Questionnaire at any time or to provide more detailed information. The Contractor must provide the requested information within 15 days.

The following criteria will be used by DDC in reviewing the Contractor's responsibility, which will be based on the information provided on the questionnaire:

Criteria 1: OSHA Injury and Illness Rates (I&IR) are no greater than the average for the industry (based on the most current Bureau of Labor Statistics data for the Contractors SIC code); and

Criteria 2: Insurance workers compensation Experience Modification Rate (EMR) equal to or less than 1.0; and

Criteria 3: Any willful violations issued by OSHA or NYC DOB within the last three (3) years; and

Criteria 4: A fatality (worker or member of public) and injuries, requiring OSHA notification, experienced on or near Contractor's worksite within the last three (3) years; and

Criteria 5: Past safety performance on DDC projects (accidents; status of safety program and site safety plan submittals; etc.)

Criteria 6: OSHA violation history for the last three (3) years;

Criteria 7: Contractor shall provide OSHA Injury and Illness Records (currently OSHA 300 and 300A Logs) for the last three (3) years.

If the Contractor fails to meet the basic criteria listed above, the Construction Safety Unit may request, through the ACCO, more details concerning the Contractor's safety experience. DDC may request the Contractor to provide copies of, among other things, accident investigation reports, OSHA records, OSHA and NYC DOB citations, EPA citations and written corrective action plan.

VI. SAFETY PROGRAM AND SITE SAFETY PLAN

Within thirty (30) days from the Award Date, or as otherwise directed, the Contractor shall submit the following: (1) Safety Program, and (2) Site Safety Plan. The Safety Program shall set forth the Contractor's overall safety policy, regulatory compliance plan and minimum safety standards. The Site Safety Plan shall identify project work scope, safety hazards associated with the project tasks, and include specific safety procedures and training appropriate and necessary to complete the work. The Safety Program and the Site Safety Plan are subject to review and acceptance by the Construction Safety Unit prior to the commencement of work at the site. Failure by the Contractor to submit an acceptable Site Safety Plan and Safety Program shall be grounds for default.

Safety Program: Corporate Safety Program established by the Contractor that includes the Contractor's overall safety policy, regulatory compliance plan and basic safety procedures covering all aspects of construction operations, performed by the Contractor. The Safety Program shall be a written document with a separate section describing each element of the Safety Program. The Safety Program shall have at minimum the following elements applicable to the Contractor's operations:

- Responsibility and Organization – Contractor's company organization chart, including titles, names, contact information, roles and responsibilities for key personnel, etc.
- Safety Training Program – Contractor's corporate training program.
- Hazard Corrective Actions – Criteria for safety inspections, identification of safety non-compliances, implementation and verification of corrective actions, forms to document safety inspections results, etc.
- Accident/Exposure Investigation
- Recordkeeping and Reporting Injuries – Responsible staff; reporting and recording criteria; OSHA 300 and 300A form completion, etc.
- Fire Protection and Prevention Program
- Housekeeping
- Illumination
- Sanitation
- Personal Protective Equipment (PPE) – Company policy for the use of head protection, foot protection, hearing protection, eye and face protection, protective clothing, and any additional protective equipment based on work tasks; PPE inspection and replacement policy.
- Hazard Communication Program
- Employee Emergency Action Plan
- Protection of Underground Facilities and Utilities
- Ionizing/Nonionizing Radiation
- Material Handling, Storage, Use and Disposal
- Tools – Hand and Power
- Signs, Signals, and Barricades
- Scaffold – Local Law 52 requirements, installation, use, inspection, dismantling, training and general safety requirements.
- Welding and Cutting
- Electrical Safety
- Fall Protection
- Cranes, Derrick, Hoists, Elevators, Conveyors
- Excavation Safety
- Concrete and Masonry Construction
- Maintenance and Protection of Traffic
- Steel Erection
- Demolition
- Blasting and the Use of Explosives
- Stairways and Ladders

- Toxic and Hazardous Substances
- Alcohol and Drug Abuse Policy
- Rodents and Vermin
- Occupational Noise Exposure
- Confined Space Program – General confined Space Program: training requirements, confined space hazard evaluation procedure, atmospheric testing procedure, confined space classification, permit-required procedure, communication procedure, rescue procedure, forms, etc.
- Construction Vehicles/Heavy Equipment
- Dust Control Procedures

Site Safety Plan: The Site Safety Plan shall be a written document and shall apply to all project specific Contractor and subcontractor operations, and shall have at a minimum, the following elements with each element described in a separate section (It may be necessary to modify the basic format for certain unique or high-risk projects, such as tunnels or high-rise construction):

- Project Work Scope – Detailed information regarding work tasks that will be performed by contractor and subcontractors under the project.
- Responsibility and Organization – Contractor's organization chart with responsible staff for the project, including titles, names, contact information, roles and responsibilities.
- Safety Training and Education – OSHA 10 Hours training, requirements for daily safety briefings and weekly safety meetings, any work task specific training, responsible staff for implementation of training program for the project.
- Job Hazard Analysis (JHA) – Project specific Job Hazard Analysis including work tasks, identified hazards, hazard control methods (administrative, engineering, PPE), contractor's name, project id, location, name and signature of a certifying person, hazard assessment date.
- Protection of Public
- Hazard Corrective Actions – Responsible staff, forms, frequency of safety inspections and implementation of corrective actions.
- Accident/Exposure Investigation – Accident/incident notification procedure of DDC project staff. Project specific procedures for accident investigation and implementation of corrective actions.
- First Aid and Medical Attention – Responsible staff, location and inspection of First Aid kit, directions to local hospitals; emergency telephone numbers.
- Project Specific Fire Protection and Prevention Program.
- Project Specific Illumination Procedure.
- Project Specific Sanitation Procedure.
- Personal Protective Equipment (PPE)
- Hazard Communication Program – Responsible staff; training; SDS records, project specific list of chemical; location of the program and SDS records.
- Means of Egress – Information regarding free and unobstructed egress from all parts of the building or structure; exit marking; maintenance of means of egress, etc.
- Employee Emergency Action Plan – Project specific: responsible staff, emergency alarm system, evacuation procedure, procedure to account for employees after evacuation, etc.
- Evacuation Plan – Project specific evacuation plan (drawing/scheme) with exists and evacuation routes.
- Protection of Underground Facilities and Utilities, including responsible staff.
- Ionizing/Nonionizing Radiation – Competent person, license and qualification requirements, type of radiation, employees exposure and protection, etc.
- Material Handling, Storage, Use and Disposal – Project specific information regarding material storage and disposal.
- Signs, Signals, and Barricades – Use of danger/warning signs, sidewalk closure, safety instruction signs, pedestrian fencing and barricades, etc.
- Scaffold – Project specific scaffold types, training, scaffold drawings, competent person, criteria for project specific scaffold, falling object protection.

- Welding and Cutting – project specific procedure for welding and cutting, including all necessary safety requirements such as fire prevention, personal protective equipment, hot work permits, FDNY certificate requirements.
- Fall Protection – Project specific information regarding selected fall protection systems, fall protection plan.
- Cranes, Derrick, Hoists, Elevators, Conveyors – project specific equipment information including type, rated load capacity, manufacture specification requirements, competent person, exposure to falling load, inspection, recordkeeping, clearance requirements, communication procedure, ground lines, permits.
- Excavation Safety – Competent person, project specific protective system.
- Maintenance and Protection of Traffic Plan – Project specific MPT plan, flagmen training.
- Steel Erection – Site specific erection plan, requirements for applicable written notifications, competent person.
- Demolition – Engineering survey, including written evidence, disconnection of all effected utilities, identification of all hazardous chemicals, materials, gases, etc., floor openings, chutes, inspection and maintenance of all stairs/passageways, removal of materials/debris/structural elements, lock out/tag out, competent person.
- Blasting and the Use of Explosives – Project specific safety procedures, warning signs, training/qualification, transportation, storage and use of explosives, inspection.
- Toxic and Hazardous Substances – Safety procedures for substances to be used on project.
- Noise Mitigation Plan – Completed project specific Noise Mitigation Plan.
- Confined Space Program – Project specific Confined Space Program, responsible staff, training records, equipment information, rescue procedure, list of project specific confined spaces, forms.
- Construction Vehicles/Heavy Equipment – Type of construction vehicles/heavy equipment to be used on site.
- Dust Mitigation Plan – Completed project specific Dust Mitigation Plan.

The most critical component of the Site Safety Plan is the Job Hazard Analysis (JHA) section. The JHA form is a written document prepared by the contractor. The contractor must conduct a site and task assessment JHA to identify the major job steps and any potential safety or environmental hazards related to performance of the work, eliminate or implement controls for the potential hazards, and identify proper personal protective equipment for the task. The JHA shall be communicated to all contractor/subcontractor personnel on site.
The initial Job Hazard Assessment form shall be included in the contractor's Site Safety Plan and the current form shall be available at the construction site for reference.

Certain DDC programs, such as Job Order Contracting System (JOCS), may not necessarily require Site Safety Plans. The JOCS contractor shall submit a Safety Program. The Site Safety Plan requirement for the JOCS contractor will be determined by QA&CS based on a project work scope, construction activities and project location. In addition, certain DDC Operating Units may establish client-specific program or safety requirements. The contractor's Site Safety Plan must address such client-specific program or safety requirements.

VII. KICK-OFF MEETINGS/PRE-CONSTRUCTION AND SAFETY REVIEW

RE/CPM shall invite QA&CS Construction Safety Unit to the construction kick-off meeting. A QA&CS representative will participate in this meeting with the Contractor and RE/CPM prior to the start of the project for the purpose of:

A. Reviewing the safety issues detailed in the contract.
B. Reviewing the Site Safety Plan.
C. Reviewing any new issues or information that was not previously addressed.
D. Discussing planned inspections and audits of the site by QA&CS personnel.

VIII. EVALUATION DURING WORK IN PROGRESS

The Contractor's adherence to these Safety Requirements will be monitored throughout the project. This will be accomplished by the following:

A. Use of a safety checklist by a representative of the Construction Safety Unit or other designated DDC representative or Consultant during regular, unannounced inspections of the job site. Field Exit Conferences will be held with the RE/CPM, Contractor Project Safety Representatives.

B. The RE/CPM will continually monitor the safety and environmental performance of the contractor's employees and work methods. Deficiencies shall be brought to the attention of the contractor's representative on site for immediate correction. The DDC representative will maintain a written record of these deficiencies and have these records available upon request. Any critical deficiencies shall be immediately reported to QA&CS phone# (718) 391-1624 or (718) 391-1911.

C. If the Contractor's safety performance during the project is not up to DDC standards (safety performance measure, accident/incident rate, etc.) the Director – QA&CS, or his/her designee will meet with the Contractor's Project Safety Representative and or Project Safety Manager, the DDC Project Manager, the RE/CPM, and the DDC Environmental Specialist (if environmental issues are involved). The purpose of this meeting is to 1) determine the level of non-compliance; 2) explain and clarify the safety/environmental provisions; 3) agree on a future course of action to correct the deficiencies.

D. If the deficiencies continue to occur with inadequate attention by the contractor, this shall, among other remedies available, be grounds for default.

E. The contractor shall within 1 hour inform the RE/CPM/CM of all accidents/incidents including all fatalities, any injuries to employees or members of the general public, and property damage (e.g., structural damage, equipment rollovers, utility damage, loads dropped from crane). The RE/CPM shall notify the Construction Safety Unit as per DDC's Construction Safety Emergency and Accident Notification and Response Protocol and shall maintain a record of all contractor accidents/incidents for the project.

F. The Construction Safety Unit shall be notified within two (2) hours of the start of any NYS-DOL/ NYC-COSH/ OSHA/ EPA inspections.

IX. SAFETY PERFORMANCE EVALUATION

The contractor's safety record, including accident/incident history and DDC safety inspection results, will be considered as part of the Contractor's performance evaluation at the conclusion of the project. Poor safety performance during the course of the project shall be a reason to rate a Contractor unsatisfactory which may be reflected in the City's Vendex system and will be considered for future procurement actions as set forth in the City's Procurement Policy Board Rules.

NEW YORK CITY STANDARD CONSTRUCTION CONTRACT (DEC. 2013)
INSURANCE RIDER

The following provisions supersede the corresponding provisions in the December 2013 version of the New York City Standard Construction Contract:

1. Section 22.1.1(c) provides as follows:

   22.1.1(c) If the **Work** requires a permit from the Department of Buildings pursuant to 1 RCNY Section 101-08, the **Contractor** shall provide Commercial General Liability Insurance with limits of at least those required by 1 RCNY section 101-08 or greater limits provided by the Agency in Schedule A. If the Work does not require such a permit, the minimum limits shall be those provided for in Schedule A.

2. Section 22.3.3 provides as follows:

   22.3.3 For policies provided pursuant to all of Article 22.1 other than Article 22.1.2, the **Contractor** shall submit one or more Certificates of Insurance on forms acceptable to the **Commissioner**. All such Certificates of Insurance shall certify (a) the issuance and effectiveness of such policies of insurance, each with the specified minimum limits (b) for insurance secured pursuant to Article 22.1.1 that the **City** and any other entity specified in Schedule A is an Additional Insured thereunder; (c) in the event insurance is required pursuant to Article 22.1.6 and/or Article 22.1.7, that the City is an Additional Insured thereunder; and (d) the company code issued to the insurance company by the National Association of Insurance Commissioners (the NAIC number). All such Certificates of Insurance shall be accompanied by the required additional insured endorsements and either a duly executed "Certification by Insurance Broker or Agent" in the form contained in Part III of Schedule A or copies of all policies referenced in such Certificate of Insurance as certified by an authorized representative of the issuing insurance carrier. If any policy is not available at the time of submission, certified binders may be submitted until such time as the policy is available, at which time a certified copy of the policy shall be submitted.

(NO TEXT ON THIS PAGE)

CITY OF NEW YORK

STANDARD CONSTRUCTION CONTRACT

DECEMBER 2013

(NO TEXT ON THIS PAGE)

CITY OF NEW YORK
STANDARD CONSTRUCTION CONTRACT

TABLE OF CONTENTS

CITY OF NEW YORK
STANDARD CONSTRUCTION CONTRACT

TABLE OF CONTENTS

TABLE OF CONTENTS

CHAPTER IX
PARTIAL AND FINAL PAYMENTS

CHAPTER X
CONTRACTOR'S DEFAULT

CHAPTER XI
MISCELLANEOUS PROVISIONS

TABLE OF CONTENTS

CHAPTER XI (CONT'D)
MISCELLANEOUS PROVISIONS

WITNESSETH:

The parties, in consideration of the mutual agreements contained herein, agree as follows:

CHAPTER I
THE CONTRACT AND DEFINITIONS

ARTICLE 1. THE CONTRACT

1.1 Except for titles, subtitles, headings, running headlines, tables of contents and indices (all of which are printed herein merely for convenience), the following, except for such portions thereof as may be specifically excluded, shall be deemed to be part of this Contract:

1.1.1 All provisions required by law to be inserted in this Contract, whether actually inserted or not;

1.1.2 The Contract Drawings and Specifications;

1.1.3 The General Conditions and Special Conditions, if any;

1.1.4 The Contract;

1.1.5 The Information for Bidders; Request for Proposals; Notice of Solicitation and Proposal For Bids; Bid or Proposal, and, if used, the Bid Booklet;

1.1.6 All Addenda issued prior to the receipt of the bids; the Notice of Award; Performance and Payment Bonds, if required; and the Notice to Proceed or the Order to Work.

1.2 Should any conflict occur in or between the Drawings and Specifications, the Contractor shall be deemed to have estimated the most expensive way of doing the Work, unless the Contractor shall have asked for and obtained a decision in writing from the Commissioner of the Agency that is entering into this Contract, before the submission of its bid, as to what shall govern.

ARTICLE 2. DEFINITIONS

2.1 The following words and expressions, or pronouns used in their stead, shall, wherever they appear in this Contract, be construed as follows, unless a different meaning is clear from the context:

2.1.1 **"Addendum"** or **"Addenda"** shall mean the additional Contract provisions and/or technical clarifications issued in writing by the Commissioner prior to the receipt of bids.

2.1.2 **"Agency"** shall mean a city, county, borough or other office, position, department, division, bureau, board or commission, or a corporation, institution or agency of government, the expenses of which are paid in whole or in part from the City treasury.

2.1.3 **"Agency Chief Contracting Officer" (ACCO)** shall mean a person delegated authority by the Commissioner to organize and supervise the procurement activity of subordinate Agency staff in conjunction with the CCPO, or his/her duly authorized representative.

2.1.4 **"Allowance"** shall mean a sum of money which the Agency may include in the total amount of the Contract for such specific contingencies as the Agency believes may be necessary to complete the Work, *e.g.*, lead or asbestos remediation, and for which the Contractor will be paid on the basis of stipulated unit prices or a formula set forth in the Contract or negotiated between the parties provided, however, that if the Contractor is not directed to use the Allowance, the Contractor shall have no right to such money and it shall be deducted from the total amount of the Contract.

2.1.5 **"City"** shall mean the City of New York.

2.1.6 **"City Chief Procurement Officer" (CCPO)** shall mean a person delegated authority by the Mayor to coordinate and oversee the procurement activity of Mayoral agency staff, including the ACCO and any offices which have oversight responsibility for the procurement of construction, or his/her duly authorized representative.

2.1.7 **"Commissioner"** shall mean the head of the Agency that has entered into this Contract, or his/her duly authorized representative.

2.1.8 **"Comptroller"** shall mean the Comptroller of the City of New York.

2.1.9 **"Contract"** or **"Contract Documents"** shall mean each of the various parts of the contract referred to in Article 1 hereof, both as a whole and severally.

2.1.10 **"Contract Drawings"** shall mean only those drawings specifically entitled as such and listed in the Specifications or in any Addendum, or any drawings furnished by the Commissioner, pertaining or supplemental thereto.

2.1.11 **"Contract Work"** shall mean everything required to be furnished and done by the Contractor by any one or more of the parts of the Contract referred to in Article 1, except Extra Work as hereinafter defined.

2.1.12 **"Contractor"** shall mean the entity which executed this Contract, whether a corporation, firm, partnership, joint venture, individual, or any combination thereof, and its, their, his/her successors, personal representatives, executors, administrators, and assigns, and any person, firm, partnership, joint venture, individual, or corporation which shall at any time be substituted in the place of the Contractor under this Contract.

2.1.13 **"Days"** shall mean calendar days, except where otherwise specified.

2.1.14 **"Engineer"** or **"Architect"** or **"Project Manager"** shall mean the person so designated in writing by the Commissioner in the Notice to Proceed or the Order to Work to act as such in relation to this Contract, including a private Architect or Engineer or Project Manager, as the case may be. Subject to written approval by the Commissioner, the Engineer, Architect or Project Manager may designate an authorized representative.

2.1.15 **"Engineering Audit Officer" (EAO)** shall mean the person so designated by the Commissioner to perform responsible auditing functions hereunder.

2.1.16 **"Extra Work"** shall mean Work other than that required by the Contract at the time of award which is authorized by the Commissioner pursuant to Chapter VI of this Contract.

2.1.17 **"Federal-Aid Contract"** shall mean a contract in which the United States (federal) Government provides financial funding as so designated in the Information for Bidders.

2.1.18 **"Final Acceptance"** shall mean final written acceptance of all the Work by the Commissioner, a copy of which shall be sent to the Contractor.

2.1.19 **"Final Approved Punch List"** shall mean a list, approved pursuant to Article 14.2.2, specifying those items of Work to be completed by the Contractor after Substantial Completion and dates for the completion of each item of Work.

2.1.20 **"Law"** or **"Laws"** shall mean the Constitution of the State of New York, the New York City Charter, the New York City Administrative Code, a statute of the United States or of the State of New York, a local law of the City of New York, any ordinance, rule or regulation having the force of law, or common law.

2.1.21 **"Materialman"** shall mean any corporation, firm, partnership, joint venture, or individual, other than employees of the Contractor, who or which contracts with the Contractor or any Subcontractor, to fabricate or deliver, or who actually fabricates or delivers, plant, materials or equipment to be incorporated in the Work.

2.1.22 **"Means and Methods of Construction"** shall mean the labor, materials, temporary structures, tools, plant, and construction equipment, and the manner and time of their use, necessary to accomplish the result intended by this Contract.

2.1.23**"Notice to Proceed" or "Order to Work"** shall mean the written notice issued by the Commissioner specifying the time for commencement of the Work and the Engineer, Architect or Project Manager.

2.1.24 **"Other Contractor(s)"** shall mean any contractor (other than the entity which executed this Contract or its Subcontractors) who or which has a contract with the City for work on or adjacent to the building or Site of the Work.

2.1.25 **"Payroll Taxes"** shall mean State Unemployment Insurance (SUI), Federal Unemployment Insurance (FUI), and payments pursuant to the Federal Insurance Contributions Act (FICA).

2.1.26 **"Project"** shall mean the public improvement to which this Contract relates.

2.1.27 **"Procurement Policy Board" (PPB)** shall mean the Agency of the City of New York whose function is to establish comprehensive and consistent procurement policies and rules which shall have broad application throughout the City.

2.1.28 **"Required Quantity"** in a unit price Contract shall mean the actual quantity of any item of Work or materials which is required to be performed or furnished in order to comply with the Contract.

2.1.29 **"Resident Engineer"** shall mean the representative of the Commissioner duly designated by the Commissioner to be his/her representative at the site of the Work.

2.1.30 **"Site"** shall mean the area upon or in which the Contractor's operations are carried on, and such other areas adjacent thereto as may be designated as such by the Engineer.

2.1.31 **"Small Tools"** shall mean items that are ordinarily required for a worker's job function, including but not limited to, equipment that ordinarily has no licensing, insurance

or substantive storage costs associated with it; such as circular and chain saws, impact drills, threaders, benders, wrenches, socket tools, etc.

2.1.32 **"Specifications"** shall mean all of the directions, requirements, and standards of performance applying to the Work as hereinafter detailed and designated under the Specifications.

2.1.33 **"Subcontractor"** shall mean any person, firm or corporation, other than employees of the Contractor, who or which contracts with the Contractor or with its subcontractors to furnish, or actually furnishes labor, or labor and materials, or labor and equipment, or superintendence, supervision and/or management at the Site. Wherever the word Subcontractor appears, it shall also mean sub-Subcontractor.

2.1.34 **"Substantial Completion"** shall mean the written determination by the Engineer that the Work required under this Contract is substantially, but not entirely, complete and the approval of the **Final Approved Punch List**.

2.1.35 **"Work"** shall mean all services required to complete the Project in accordance with the Contract Documents, including without limitation, labor, material, superintendence, management, administration, equipment, and incidentals, and obtaining any and all permits, certifications and licenses as may be necessary and required to complete the Work, and shall include both Contract Work and Extra Work.

CHAPTER II
THE WORK AND ITS PERFORMANCE

ARTICLE 3. CHARACTER OF THE WORK

3.1 Unless otherwise expressly provided in the **Contract Drawings**, **Specifications**, and **Addenda**, the **Work** shall be performed in accordance with the best modern practice, utilizing, unless otherwise specified in writing, new and unused materials of standard first grade quality and workmanship and design of the highest quality, to the satisfaction of the **Commissioner**.

ARTICLE 4. MEANS AND METHODS OF CONSTRUCTION

4.1 Unless otherwise expressly provided in the **Contract Drawings**, **Specifications**, and **Addenda**, the **Means and Methods of Construction** shall be such as the **Contractor** may choose; subject, however, to the **Engineer's** right to reject the **Means and Methods of Construction** proposed by the **Contractor** which in the opinion of the **Engineer**:

4.1.1 Will constitute or create a hazard to the **Work**, or to persons or property; or

4.1.2 Will not produce finished **Work** in accordance with the terms of the **Contract**; or

4.1.3 Will be detrimental to the overall progress of the **Project**.

4.2 The **Engineer's** approval of the **Contractor's Means and Methods of Construction**, or his/her failure to exercise his/her right to reject such means or methods, shall not relieve the **Contractor** of its obligation to complete the **Work** as provided in this **Contract**; nor shall the exercise of such right to reject create a cause of action for damages.

ARTICLE 5. COMPLIANCE WITH LAWS

5.1 The **Contractor** shall comply with all **Laws** applicable to this **Contract** and to the **Work** to be done hereunder.

5.2 Procurement Policy Board Rules: This **Contract** is subject to the Rules of the **PPB** ("**PPB** Rules") in effect at the time of the bid opening for this **Contract**. In the event of a conflict between the **PPB** Rules and a provision of this **Contract**, the **PPB** Rules shall take precedence.

5.3 Noise Control Code provisions.

5.3.1 In accordance with the provisions of Section 24-216(b) of the Administrative Code of the **City** ("Administrative Code"), Noise Abatement Contract Compliance, devices and activities which will be operated, conducted, constructed or manufactured pursuant to this **Contract** and which are subject to the provisions of the **City** Noise Control Code shall be operated, conducted, constructed, or manufactured without causing a violation of the Administrative Code. Such devices and activities shall incorporate advances in the art of noise control development for the kind and level of noise emitted or produced by such devices and activities, in accordance with regulations issued by the **Commissioner** of the **City** Department of Environmental Protection.

5.3.2 The **Contractor** agrees to comply with Section 24-219 of the Administrative Code and implementing rules codified at 15 Rules of the City of New York ("RCNY") Section 28-100 *et seq*. In accordance with such provisions, the **Contractor**, if the **Contractor** is the responsible party under such regulations, shall prepare and post a Construction Noise Mitigation Plan at each **Site**, in which the **Contractor** shall certify that all construction tools and equipment have been maintained so that they operate at normal manufacturers operating specifications. If the **Contractor** cannot make this certification, it must have in place an Alternative Noise Mitigation Plan approved by the **City** Department of Environmental Protection. In addition, the **Contractor**'s certified Construction Noise Mitigation Plan is subject inspection by the **City** Department of Environmental Protection in accordance with Section 28-101 of Title 15 of RCNY. No **Contract Work** may take place at a **Site** unless there is a Construction Noise Mitigation Plan or approved Alternative Noise Mitigation Plan in place. In addition, the **Contractor** shall create and implement a noise mitigation training program. Failure to comply with these requirements may result in fines and other penalties pursuant to the applicable provisions of the Administrative Code and RCNY.

5.4 Ultra Low Sulfur Diesel Fuel: In accordance with the provisions of Section 24-163.3 of the Administrative Code, the **Contractor** specifically agrees as follows:

5.4.1 Definitions. For purposes of this Article 5.4, the following definitions apply:

5.4.1(a) "Contractor" means any person or entity that enters into a Public Works Contract with a **City Agency**, or any person or entity that enters into an agreement with such person or entity, to perform work or provide labor or services related to such Public Works Contract.

5.4.1(b) "Motor Vehicle" means any self-propelled vehicle designed for transporting persons or property on a street or highway.

5.4.1(c) "Nonroad Engine" means an internal combustion engine (including the fuel system) that is not used in a Motor Vehicle or a vehicle used solely for competition, or that is not subject to standards promulgated under Section 7411 or Section 7521 of

Title 42 of the United States Code, except that this term shall apply to internal combustion engines used to power generators, compressors or similar equipment used in any construction program or project.

5.4.1(d) "Nonroad Vehicle" means a vehicle that is powered by a Nonroad Engine, fifty (50) horsepower and greater, and that is not a Motor Vehicle or a vehicle used solely for competition, which shall include, but not be limited to, excavators, backhoes, cranes, compressors, generators, bulldozers, and similar equipment, except that this term shall not apply to horticultural maintenance vehicles used for landscaping purposes that are powered by a Nonroad Engine of sixty-five (65) horsepower or less and that are not used in any construction program or project.

5.4.1(e) "Public Works Contract" means a contract with a **City Agency** for a construction program or project involving the construction, demolition, restoration, rehabilitation, repair, renovation, or abatement of any building, structure, tunnel, excavation, roadway, park or bridge; a contract with a **City Agency** for the preparation for any construction program or project involving the construction, demolition, restoration, rehabilitation, repair, renovation, or abatement of any building, structure, tunnel, excavation, roadway, park or bridge; or a contract with a **City Agency** for any final work involved in the completion of any construction program or project involving the construction, demolition, restoration, rehabilitation, repair, renovation, or abatement of any building, structure, tunnel, excavation, roadway, park or bridge.

5.4.1(f) "Ultra Low Sulfur Diesel Fuel" means diesel fuel that has a sulfur content of no more than fifteen parts per million (15 ppm).

5.4.2 Ultra Low Sulfur Diesel Fuel

5.4.2(a) All **Contractors** shall use Ultra Low Sulfur Diesel Fuel in diesel-powered Nonroad Vehicles in the performance of this **Contract**.

5.4.2(b) Notwithstanding the requirements of Article 5.4.2(a), **Contractors** may use diesel fuel that has a sulfur content of no more than thirty parts per million (30 ppm) to fulfill the requirements of this Article 5.4.2, where the Commissioner of the **City** Department of Environmental Protection ("DEP Commissioner") has issued a determination that a sufficient quantity of Ultra Low Sulfur Diesel Fuel is not available to meet the needs of **Agencies** and **Contractors**. Any such determination shall expire after six (6) months unless renewed.

5.4.2(c) **Contractors** shall not be required to comply with this Article 5.4.2 where the **City Agency** letting this **Contract** makes a written finding, which is approved, in writing, by the DEP Commissioner, that a sufficient quantity of Ultra Low Sulfur Diesel Fuel, or diesel fuel that has a sulfur content of no more than thirty parts per million (30 ppm) is not available to meet the requirements of Section 24-163.3 of the Administrative Code, provided that such **Contractor** in its fulfillment of the requirements of this **Contract**, to the extent practicable, shall use whatever quantity of Ultra Low Sulfur Diesel Fuel or diesel fuel that has a sulfur content of no more than thirty parts per million (30 ppm) is available. Any finding made pursuant to this Article 5.4.2(c) shall expire after sixty (60) **Days**, at which time the requirements of this Article 5.4.2 shall be in full force and effect unless the **City Agency** renews the finding in writing and such renewal is approved by the DEP Commissioner.

5.4.2(d) **Contractors** may check on determinations and approvals issued by the DEP Commissioner pursuant to Section 24-163.3 of the Administrative Code, if any, at www.dep.nyc.gov or by contacting the **City Agency** letting this **Contract**.

5.4.2(e) The requirements of this Article 5.4.2 do not apply where they are precluded by federal or State funding requirements or where the **Contract** is an emergency procurement.

5.4.3 Best Available Technology

5.4.3(a) All **Contractors** shall utilize the best available technology for reducing the emission of pollutants for diesel-powered Nonroad Vehicles in the performance of this **Contract**. For determinations of best available technology for each type of diesel-powered Nonroad Vehicle, **Contractors** shall comply with the regulations of the **City** Department of Environmental Protection, as and when adopted, Chapter 14 of Title 15 of the Rules of the City of New York (RCNY). The **Contractor** shall fully document all steps in the best available technology selection process and shall furnish such documentation to the **City Agency** or the DEP Commissioner upon request. The **Contractor** shall retain all documentation generated in the best available technology selection process for as long as the selected best available technology is in use.

5.4.3(b) No **Contractor** shall be required to replace best available technology for reducing the emission of pollutants or other authorized technology utilized for a diesel-powered Nonroad Vehicle in accordance with the provisions of this Article 5.4.3 within three (3) years of having first utilized such technology for such vehicle.

5.4.3(c) This Article 5.4.3 shall not apply to any vehicle used to satisfy the requirements of a specific Public Works Contract for fewer than twenty (20) **Days**.

5.4.3(d) The **Contractor** shall not be required to comply with this Article 5.4.3 with respect to a diesel-powered Nonroad Vehicle under the following circumstances:

5.4.3(d)(i) Where the **City Agency** makes a written finding, which is approved, in writing, by the DEP Commissioner, that the best available technology for reducing the emission of pollutants as required by this Article 5.4.3 is unavailable for such vehicle, the **Contractor** shall use whatever technology for reducing the emission of pollutants, if any, is available and appropriate for such vehicle.

5.4.3(d)(ii) Where the DEP Commissioner has issued a written waiver based upon the **Contractor** having demonstrated to the DEP Commissioner that the use of the best available technology for reducing the emission of pollutants might endanger the operator of such vehicle or those working near such vehicle, due to engine malfunction, the **Contractor** shall use whatever technology for reducing the emission of pollutants, if any, is available and appropriate for such vehicle, which would not endanger the operator of such vehicle or those working near such vehicle.

5.4.3(d)(iii) In determining which technology to use for the purposes of Articles 5.4.3(d)(i) and 5.4.3(d)(ii) above, the **Contractor** shall primarily consider the reduction in emissions of particulate matter and secondarily consider the reduction in emissions of nitrogen oxides associated with the use of such

technology, which shall in no event result in an increase in the emissions of either such pollutant.

5.4.3(d)(iv) The **Contractor** shall submit requests for a finding or a waiver pursuant to this Article 5.4.3(d) in writing to the DEP Commissioner, with a copy to the **ACCO** of the **City Agency** letting this **Contract**. Any finding or waiver made or issued pursuant to Articles 5.4.3(d)(i) and 5.4.3(d)(ii) above shall expire after one hundred eighty (180) **Days**, at which time the requirements of Article 5.4.3(a) shall be in full force and effect unless the **City Agency** renews the finding, in writing, and the DEP Commissioner approves such finding, in writing, or the DEP Commissioner renews the waiver, in writing.

5.4.3(e) The requirements of this Article 5.4.3 do not apply where they are precluded by federal or State funding requirements or where the **Contract** is an emergency procurement.

5.4.4 Section 24-163 of the Administrative Code. The **Contractor** shall comply with Section 24-163 of the Administrative Code related to the idling of the engines of motor vehicles while parking.

5.4.5 Compliance

5.4.5(a) The **Contractor's** compliance with Article 5.4 may be independently monitored. If it is determined that the **Contractor** has failed to comply with any provision of Article 5.4, any costs associated with any independent monitoring incurred by the **City** shall be reimbursed by the **Contractor**.

5.4.5(b) Any **Contractor** who violates any provision of Article 5.4, except as provided in Article 5.4.5(c) below, shall be liable for a civil penalty between the amounts of one thousand ($1,000) and ten thousand ($10,000) dollars, in addition to twice the amount of money saved by such **Contractor** for failure to comply with Article 5.4.

5.4.5(c) No **Contractor** shall make a false claim with respect to the provisions of Article 5.4 to a **City Agency**. Where a **Contractor** has been found to have done so, such **Contractor** shall be liable for a civil penalty of twenty thousand ($20,000) dollars, in addition to twice the amount of money saved by such **Contractor** in association with having made such false claim.

5.4.6 Reporting

5.4.6(a) For all Public Works Contracts covered by this Article 5.4, the **Contractor** shall report to the **City Agency** the following information:

5.4.6(a)(i) The total number of diesel-powered Nonroad Vehicles used to fulfill the requirements of this Public Works Contract;

5.4.6(a)(ii) The number of such Nonroad Vehicles that were powered by Ultra Low Sulfur Diesel Fuel;

5.4.6(a)(iii) The number of such Nonroad Vehicles that utilized the best available technology for reducing the emission of pollutants, including a breakdown by vehicle model and the type of technology;

5.4.6(a)(iv) The number of such Nonroad Vehicles that utilized such other authorized technology in accordance with Article 5.4.3, including a breakdown by vehicle model and the type of technology used for each such vehicle;

5.4.6(a)(v) The locations where such Nonroad Vehicles were used; and

5.4.6(a)(vi) Where a determination is in effect pursuant to Article 5.4.2(b) or 5.4.2(c), detailed information concerning the **Contractor's** efforts to obtain Ultra Low Sulfur Diesel Fuel or diesel fuel that has a sulfur content of no more than thirty parts per million (30 ppm).

5.4.6(b) The **Contractor** shall submit the information required by Article 5.4.6(a) at the completion of **Work** under the Public Works Contract and on a yearly basis no later than August 1 throughout the term of the Public Works Contract. The yearly report shall cover **Work** performed during the preceding fiscal year (July 1 - June 30).

5.5 Ultra Low Sulfur Diesel Fuel. In accordance with the Coordinated Construction Act for Lower Manhattan, as amended:

5.5.1 Definitions. For purposes of this Article 5.5, the following definitions apply:

5.5.1(a) "Lower Manhattan" means the area to the south of and within the following lines: a line beginning at a point where the United States pierhead line in the Hudson River as it exists now or may be extended would intersect with the southerly line of West Houston Street in the Borough of Manhattan extended, thence easterly along the southerly side of West Houston Street to the southerly side of Houston Street, thence easterly along the southerly side of Houston Street to the southerly side of East Houston Street, thence northeasterly along the southerly side of East Houston Street to the point where it would intersect with the United States pierhead line in the East River as it exists now or may be extended, including tax lots within or immediately adjacent thereto.

5.5.1(b) "Lower Manhattan Redevelopment Project" means any project in Lower Manhattan that is funded in whole or in part with federal or State funding, or any project intended to improve transportation between Lower Manhattan and the two air terminals in the **City** known as LaGuardia Airport and John F. Kennedy International Airport, or between Lower Manhattan and the air terminal in Newark known as Newark Liberty International Airport, and that is funded in whole or in part with federal funding.

5.5.1(c) "Nonroad Engine" means an internal combustion engine (including the fuel system) that is not used in a Motor Vehicle or a vehicle used solely for competition, or that is not subject to standards promulgated under Section 7411 or Section 7521 of Title 42 of the United States Code, except that this term shall apply to internal combustion engines used to power generators, compressors or similar equipment used in any construction program or project.

5.5.1(d) "Nonroad Vehicle" means a vehicle that is powered by a Nonroad Engine, fifty (50) horsepower (HP) and greater, and that is not a Motor Vehicle or a vehicle used solely for competition, which shall include, but not be limited to, excavators, backhoes, cranes, compressors, generators, bulldozers, and similar equipment, except

that this terms shall not apply to horticultural maintenance vehicles used for landscaping purposes that are powered by a Nonroad Engine of sixty-five (65) HP or less and that are not used in any construction program or project.

5.5.1(e) "Ultra Low Sulfur Diesel Fuel" means diesel fuel that has a sulfur content of no more than fifteen parts per million (15 ppm).

5.5.2 Requirements. **Contractors** and **Subcontractors** are required to use only Ultra Low Sulfur Diesel Fuel to power the diesel-powered Nonroad Vehicles with engine HP rating of fifty (50) HP and above used on a Lower Manhattan Redevelopment Project and, where practicable, to reduce the emission of pollutants by retrofitting such Nonroad Vehicles with oxidation catalysts, particulate filters, or technology that achieves lowest particulate matter emissions.

5.6 Pesticides. In accordance with Section 17-1209 of the Administrative Code, to the extent that the **Contractor** or any **Subcontractor** applies pesticides to any property owned or leased by the **City**, the **Contractor,** and any **Subcontractor** shall comply with Chapter 12 of the Administrative Code.

5.7 Waste Treatment, Storage, and Disposal Facilities and Transporters. In connection with the **Work**, the **Contractor** and any **Subcontractor** shall use only those waste treatment, storage, and disposal facilities and waste transporters that possess the requisite license, permit or other governmental approval necessary to treat, store, dispose, or transport the waste, materials or hazardous substances.

5.8 Environmentally Preferable Purchasing. The **Contractor** shall ensure that products purchased or leased by the **Contractor** or any **Subcontractor** for the **Work** that are not specified by the **City** or are submitted as equivalents to a product specified by the **City** comply with the requirements of the New York City Environmentally Preferable Purchasing Program contained in Chapter 11 of Title 43 of the RCNY, pursuant to Chapter 3 of Title 6 of the Administrative Code.

ARTICLE 6. INSPECTION

6.1 During the progress of the **Work** and up to the date of **Final Acceptance**, the **Contractor** shall at all times afford the representatives of the **City** every reasonable, safe, and proper facility for inspecting all **Work** done or being done at the **Site** and also for inspecting the manufacture or preparation of materials and equipment at the place of such manufacture or preparation.

6.2 The **Contractor's** obligation hereunder shall include the uncovering or taking down of finished **Work** and its restoration thereafter; provided, however, that the order to uncover, take down and restore shall be in writing, and further provided that if **Work** thus exposed proves satisfactory, and if the **Contractor** has complied with Article 6.1, such uncovering or taking down and restoration shall be considered an item of **Extra Work** to be paid for in accordance with the provisions of Article 26. If the **Work** thus exposed proves unsatisfactory, the **City** has no obligation to compensate the **Contractor** for the uncovering, taking down or restoration.

6.3 Inspection and approval by the **Commissioner**, the **Engineer**, **Project Manager**, or **Resident Engineer**, of finished **Work** or of **Work** being performed, or of materials and equipment at the place of manufacture or preparation, shall not relieve the **Contractor** of its obligation to perform the **Work** in strict accordance with the **Contract**. Finished or unfinished **Work** not found to be in strict accordance with the **Contract** shall be replaced as directed by the **Engineer**, even though such **Work** may have been previously approved and paid for. Such corrective **Work** is **Contract Work** and shall not be deemed **Extra Work**.

6.4 Rejected **Work** and materials shall be promptly taken down and removed from the **Site**, which must at all times be kept in a reasonably clean and neat condition.

ARTICLE 7. PROTECTION OF WORK AND OF PERSONS AND PROPERTY; NOTICES AND INDEMNIFICATION

7.1 During the performance of the **Work** and up to the date of **Final Acceptance**, the **Contractor** shall be under an absolute obligation to protect the finished and unfinished **Work** against any damage, loss, injury, theft and/or vandalism and in the event of such damage, loss, injury, theft and/or vandalism, it shall promptly replace and/or repair such **Work** at the **Contractor's** sole cost and expense, as directed by the **Resident Engineer**. The obligation to deliver finished **Work** in strict accordance with the **Contract** prior to **Final Acceptance** shall be absolute and shall not be affected by the **Resident Engineer's** approval of, or failure to prohibit, the **Means and Methods of Construction** used by the **Contractor**.

7.2 During the performance of the **Work** and up to the date of **Final Acceptance**, the **Contractor** shall take all reasonable precautions to protect all persons and the property of the **City** and of others from damage, loss or injury resulting from the **Contractor's**, and/or its **Subcontractors'** operations under this **Contract.** The **Contractor's** obligation to protect shall include the duty to provide, place or replace, and adequately maintain at or about the **Site** suitable and sufficient protection such as lights, barricades, and enclosures.

7.3 The **Contractor** shall comply with the notification requirements set forth below in the event of any loss, damage or injury to **Work**, persons or property, or any accidents arising out of the operations of the **Contractor** and/or its **Subcontractors** under this **Contract**.

7.3.1 The **Contractor** shall make a full and complete report in writing to the **Resident Engineer** within three (3) **Days** after the occurrence.

7.3.2 The **Contractor** shall also send written notice of any such event to all insurance carriers that issued potentially responsive policies (including commercial general liability insurance carriers for events relating to the **Contractor**'s own employees) no later than twenty (20) days after such event and again no later than twenty (20) days after the initiation of any claim and/or action resulting therefrom. Such notice shall contain the following information: the number of the insurance policy, the name of the Named Insured, the date and location of the incident, and the identity of the persons injured or property damaged. For any policy on which the **City** and/or the **Engineer**, **Architect**, or **Project Manager** are Additional Insureds, such notice shall expressly specify that "this notice is being given on behalf of the City of New York as Additional Insured, such other Additional Insureds, as well as the Named Insured."

7.3.2(a) Whenever such notice is sent under a policy on which the **City** is an Additional Insured, the **Contractor** shall provide copies of the notice to the **Comptroller,** the **Commissioner** and the **City** Corporation Counsel. The copy to the **Comptroller** shall be sent to the Insurance Unit, NYC Comptroller's Office, 1 Centre Street – Room 1222, New York, New York, 10007. The copy to the **Commissioner** shall be sent to the address set forth in Schedule A of the General Conditions. The copy to the **City** Corporation Counsel shall be sent to Insurance Claims Specialist, Affirmative Litigation Division, New York City Law Department, 100 Church Street, New York, New York 10007.

7.3.2(b) If the **Contractor** fails to provide any of the foregoing notices to any appropriate insurance carrier(s) in a timely and complete manner, the **Contractor** shall indemnify the **City** for all losses, judgments, settlements, and expenses, including reasonable attorneys' fees, arising from an insurer's disclaimer of coverage citing late notice by or on behalf of the **City**.

7.4 To the fullest extent permitted by law, the **Contractor** shall defend, indemnify, and hold the **City**, its employees, and officials (the "Indemnitees") harmless against any and all claims (including but not limited to claims asserted by any employee of the **Contractor** and/or its **Subcontractors**) and costs and expenses of whatever kind (including but not limited to payment or reimbursement of attorneys' fees and disbursements) allegedly arising out of or in any way related to the operations of the **Contractor** and/or its **Subcontractors** in the performance of this **Contract** or from the **Contractor's** and/or its **Subcontractors'** failure to comply with any of the provisions of this **Contract** or of the **Law**. Such costs and expenses shall include all those incurred in defending the underlying claim and those incurred in connection with the enforcement of this Article 7.4 by way of cross-claim, third-party claim, declaratory action or otherwise. The parties expressly agree that the indemnification obligation hereunder contemplates (1) full indemnity in the event of liability imposed against the Indemnitees without negligence and solely by reason of statute, operation of **Law** or otherwise; and (2) partial indemnity in the event of any actual negligence on the part of the Indemnitees either causing or contributing to the underlying claim (in which case, indemnification will be limited to any liability imposed over and above that percentage attributable to actual fault whether by statute, by operation of **Law**, or otherwise). Where partial indemnity is provided hereunder, all costs and expenses shall be indemnified on a pro rata basis.

7.4.1 Indemnification under Article 7.4 or any other provision of the **Contract** shall operate whether or not **Contractor** or its **Subcontractors** have placed and maintained the insurance specified under Article 22.

7.5 The provisions of this Article 7 shall not be deemed to create any new right of action in favor of third parties against the **Contractor** or the **City**.

CHAPTER III
TIME PROVISIONS

ARTICLE 8. COMMENCEMENT AND PROSECUTION OF THE WORK

8.1 The **Contractor** shall commence the **Work** on the date specified in the **Notice to Proceed** or the **Order to Work**. The time for performance of the **Work** under the **Contract** shall be computed from the date specified in the **Notice to Proceed** or the **Order to Work**. **TIME BEING OF THE ESSENCE** to the **City**, the **Contractor** shall thereafter prosecute the **Work** diligently, using such **Means and Methods of Construction** as are in accord with Article 4 herein and as will assure its completion not later than the date specified in this Contract, or on the date to which the time for completion may be extended.

ARTICLE 9. PROGRESS SCHEDULES

9.1 To enable the **Work** to be performed in an orderly and expeditious manner, the **Contractor**, within fifteen (15) **Days** after the **Notice to Proceed** or **Order to Work**, unless otherwise directed by the **Engineer**, shall submit to the **Engineer** a proposed progress schedule based on the Critical Path Method in the form of a bar graph or in such other form as specified by the **Engineer**, and monthly cash flow requirements, showing:

9.1.1 The anticipated time of commencement and completion of each of the various operations to be performed under this **Contract**; and

9.1.2 The sequence and interrelation of each of these operations with the others and with those of other related contracts; and

9.1.3 The estimated time required for fabrication or delivery, or both, of all materials and equipment required for the **Work**, including the anticipated time for obtaining required approvals pursuant to Article 10; and

9.1.4 The estimated amount in dollars the **Contractor** will claim on a monthly basis.

9.2 The proposed schedule shall be revised as directed by the **Engineer**, until finally approved by the **Engineer**, and after such approval, subject to the provisions of Article 11, shall be strictly adhered to by the **Contractor**.

9.3 If the **Contractor** shall fail to adhere to the approved progress schedule, or to the schedule as revised pursuant to Article 11, it shall promptly adopt such other or additional **Means and Methods of Construction**, at its sole cost and expense, as will make up for the time lost and will assure completion in accordance with the approved progress schedule. The approval by the **City** of a progress schedule which is shorter than the time allotted under the **Contract** shall not create any liability for the **City** if the approved progress schedule is not met.

9.4 The **Contractor** will not receive any payments until the proposed progress schedule is submitted.

ARTICLE 10. REQUESTS FOR INFORMATION OR APPROVAL

10.1 From time to time as the **Work** progresses and in the sequence indicated by the approved progress schedule, the **Contractor** shall submit to the **Engineer** a specific request in writing for each item of information or approval required by the **Contractor**. These requests shall state the latest date upon which the information or approval is actually required by the **Contractor**, and shall be submitted in a reasonable time in advance thereof to provide the **Engineer** a sufficient time to act upon such submissions, or any necessary re-submissions thereof.

10.2 The **Contractor** shall not have any right to an extension of time on account of delays due to the **Contractor's** failure to submit requests for the required information or the required approval in accordance with the above requirements.

ARTICLE 11. NOTICE OF CONDITIONS CAUSING DELAY AND DOCUMENTATION OF DAMAGES CAUSED BY DELAY

11.1 After the commencement of any condition which is causing or may cause a delay in completion of the **Work**, including conditions for which the **Contractor** may be entitled to an extension of time, the following notifications and submittals are required:

11.1.1 Within seven (7) **Days** after the commencement of such condition, the **Contractor** must notify the **Engineer** in writing of the existence, nature and effect of such condition upon the approved progress schedule and the **Work**, and must state why and in what respects, if any, the condition is causing or may cause a delay.

11.1.2 If the **Contractor** shall claim to be sustaining damages for delay as provided for in this Article 11, within forty-five (45) **Days** from the time such damages are first incurred, and every thirty (30) **Days** thereafter for as long as such damages are being incurred, the **Contractor** shall submit to the **Commissioner** verified written statements of the details and the amounts of such damages, together with documentary evidence of such damages, ("statement of delay damages") as further detailed in Article 11.6. The **Contractor** may submit any of the above statements within such additional time as may be granted by the **Commissioner** in writing upon written request therefor. On failure of the **Contractor** to strictly comply with all of the foregoing provisions, such claims shall be deemed waived and no right to recover on such claims shall exist. Damages that the **Contractor** may claim in any action arising under or by reason of this **Contract** shall not be different from or in excess of the statements made and documentation provided pursuant to this Article 11.

11.1.3 Within 60 days of submission of the final verified statement of claims pursuant to Article 44, the **Commissioner** shall make a determination as to whether a compensable delay has occurred and, if so, the amount of compensation due the **Contractor**. Notwithstanding the above, the **Commissioner** may make a determination as to whether a compensable delay has occurred at any time after the **Contractor's** first submission of a statement of delay damages provided, however, that the amount of compensation due to the **Contractor** will not be determined until the **Commissioner** determines that the **Work** is delayed after the date set for substantial completion.

11.2 Failure of the **Contractor** to strictly comply with the requirements of Article 11.1.1 may, in the discretion of the **Commissioner**, be deemed sufficient cause to deny any extension of time on account of delay arising out of such condition. Failure of the **Contractor** to strictly comply with the requirements of Articles 11.1.1 and 11.1.2 shall be deemed a conclusive waiver by the **Contractor** of any and all claims for damages for delay arising from such condition and no right to recover on such claims shall exist.

11.3 When appropriate and directed by the **Engineer**, the progress schedule shall be revised by the **Contractor** until finally approved by the **Engineer**. The revised progress schedule must be strictly adhered to by the **Contractor**.

11.4 Compensable Delays

11.4.1 The **Contractor** agrees to make claim only for additional costs attributable to delay in the performance of this **Contract** necessarily extending the time for completion of the **Work** or resulting from acceleration directed by the **Commissioner** and required to maintain the **Project** schedule, occasioned solely by any act or omission to act of the **City** listed below. The **Contractor** also agrees that delay from any other cause shall be compensated, if at all, solely by an extension of time to complete the performance of the **Work**.

11.4.1.1 The failure of the **City** to take reasonable measures to coordinate and progress the **Work**, except that the City shall not be responsible for the **Contractor's** obligation to coordinate and progress the **Work** of its **Subcontractors.**

11.4.1.2 Extended delays attributable to the **City** in the review or issuance of change orders, in shop drawing reviews and approvals or as a result of the cumulative impact of multiple change orders, which have a verifiable impact on **Project** costs.

11.4.1.3 The unavailability of the **Site** for an extended period of time that significantly affects the scheduled completion of the **Contract**.

11.4.1.4 The issuance by the **Engineer** of a stop work order relative to a substantial portion of the **Work** for a period exceeding thirty (30) **Days**, that was not brought about through any action or omission of the **Contractor**.

11.4.1.5 Differing site conditions that were neither known nor reasonably ascertainable on a pre-bid inspection of the **Site** or review of the bid documents or other publicly available sources, and that are not ordinarily encountered in the **Project's** geographical area or neighborhood or in the type of **Work** to be performed.

11.4.1.6 Delays caused by the **City's** bad faith or its willful, malicious, or grossly negligent conduct;

11.4.1.7 Delays not contemplated by the parties;

11.4.1.8 Delays so unreasonable that they constitute an intentional abandonment of the **Contract** by the **City**; and

11.4.1.9 Delays resulting from the **City's** breach of a fundamental obligation of the **Contract**.

11.4.2 No claim may be made for any alleged delay in **Substantial Completion** of the **Work** by a date earlier than the date of **Substantial Completion** provided for in Schedule A unless there is a provision in the **Contract** providing for additional compensation for early completion. No claim may be made for any alleged delay in **Substantial Completion** of the **Work** if the work is substantially completed by the date of **Substantial Completion** provided for in Schedule A unless acceleration has been directed by the **Commissioner** to meet the date of **Substantial Completion** set forth in Schedule A.

11.4.3 The provisions of this Article 11 apply only to claims for additional costs attributable to delay and do not preclude determinations by the **Commissioner** allowing reimbursements for additional costs for **Extra Work** pursuant to Articles 25 and 26 of this **Contract**. To the extent that any cost attributable to delay is reimbursed as part of a change order, no additional claim for compensation under this Article 11 shall be allowed.

11.5 Non-Compensable Delays. The **Contractor** agrees to make no claim for, and is deemed to have included in its bid prices for the various items of the **Contract**, the extra/additional costs attributable to any delays caused by or attributable to the items set forth below. For such items, the **Contractor** shall be compensated, if at all, solely by an extension of time to complete the performance of the **Work**, in accordance with the provisions of Article 13. Such extensions of time will be granted, if at all, pursuant to the grounds set forth in Article 13.3.

11.5.1 The acts or omissions of any third parties, including but not limited to **Other Contractors**, public/ governmental bodies (other than **City Agencies**), utilities or private enterprises, who are disclosed in the **Contract Documents** or are ordinarily encountered or generally recognized as related to the **Work**;

11.5.2 Any situation which was within the contemplation of the parties at the time of entering into the **Contract**, including any delay indicated or disclosed in the **Contract Documents** or generally recognized as related to the nature of the **Work**, and/or the existence of any facility or appurtenance owned, operated or maintained by any third party, as indicated or disclosed in the **Contract Documents** or ordinarily encountered or generally recognized as related to the nature of the **Work**;

11.5.3 Restraining orders, injunctions or judgments issued by a court which were caused by a Contractor's submission, action or inaction or by a Contractor's **Means and Methods of**

Construction, or by third parties, unless such order, injunction or judgment was the result of an action or omission by the **City**;

11.5.4 Any labor boycott, strike, picketing, lockout or similar situation;

11.5.5 Any shortages of supplies or materials, or unavailability of equipment, required by the **Contract Work**;

11.5.6 Climatic conditions, storms, floods, droughts, tidal waves, fires, hurricanes, earthquakes, landslides or other catastrophes or acts of God, or acts of war or of the public enemy or terrorist acts, including the **City's** reasonable responses thereto; and

11.5.7 **Extra Work** which does not significantly affect the overall completion of the **Contract**, reasonable delays in the review or issuance of change orders or field orders and/or in shop drawing reviews or approvals.

11.6 Required Content of Submission of Statement of Delay Damages

11.6.1 In the verified written statement of delay damages required by Article 11.1.2, the following information shall be provided by the **Contractor**:

11.6.1.1 For each delay, the start and end dates of the claimed periods of delay and, in addition, a description of the operations that were delayed, an explanation of how they were delayed, and the reasons for the delay, including identifying the applicable act or omission of the City listed in Article 11.4.

11.6.1.2 A detailed factual statement of the claim providing all necessary dates, locations and items of **Work** affected by the claim.

11.6.1.3 The amount of additional compensation sought and a breakdown of that amount into categories as described in Article 26.2, subject to the limitations set forth in Article 11.7.

11.6.1.4 Any additional information requested by the **Commissioner**.

11.7 Recoverable Costs

11.7.1 Delay damages may be recoverable for the following costs actually and necessarily incurred in the performance of the **Work**:

11.7.1.1 Direct labor, including payroll taxes (subject to statutory wage caps) and supplemental benefits, based on time and materials records;

11.7.1.2 Necessary materials (including transportation to the **Site**), based on time and material records;

11.7.1.3 Reasonable rental value of necessary plant and equipment other than small tools, plus fuel/energy costs according to the applicable formula set forth in Articles 26.2.4 and/or 26.2.8, based on time and material records;

11.7.1.4 Insurance and bond costs;

11.7.1.5 Extended field office costs;

11.7.1.6 Extended **Site** overhead; and

11.7.1.7 Extended home office overhead.

11.7.2 Recoverable Subcontractor Costs. When the **Work** is performed by a **Subcontractor**, the **Contractor** may be paid the actual and necessary costs of such subcontracted **Work** as outlined above in Articles 11.7.1.1 through 11.7.1.6, and an

additional overhead of five (5%) percent of the costs outlined in Articles 11.7.1.1 through 11.7.1.3.

11.7.3 Non-Recoverable Costs. The parties agree that the **City** will have no liability for the following items and the **Contractor** agrees it shall make no claim for the following items:

11.7.3.1 Profit, or loss of anticipated or unanticipated profit;

11.7.3.2 Consequential damages, including but not limited to interest on monies in dispute, including interest which is paid on such monies, loss of bonding capacity, bidding opportunities, or interest in investment, or any resulting insolvency;

11.7.3.3 Indirect costs or expenses of any nature;

11.7.3.4 Direct or indirect costs attributable to performance of **Work** where the **Contractor**, because of situations or conditions within its control, has not progressed the **Work** in a satisfactory manner; and

11.7.3.5 Attorneys' fees and dispute and claims preparation expenses.

11.8 Determinations under this Article 11 are not subject to the jurisdiction of the Contract Dispute Resolution Board pursuant to the dispute resolution process set forth in Article 27.

11.9 If the parties agree, pursuant to Article 11.1.3 above, that a compensable delay has occurred and agree on the amount of compensation, payment may be made pursuant to a written change order. Payment pursuant to such change order is subject to pre-audit by the **Engineering Audit Officer,** and may be post-audited by the **Comptroller** and/or the **Agency**.

ARTICLE 12. COORDINATION WITH OTHER CONTRACTORS

12.1 During the progress of the **Work**, **Other Contractors** may be engaged in performing other work or may be awarded other contracts for additional work on this **Project**. In that event, the **Contractor** shall coordinate the **Work** to be done hereunder with the work of such **Other Contractors** and the **Contractor** shall fully cooperate with such **Other Contractors** and carefully fit its own **Work** to that provided under other contracts as may be directed by the **Engineer**. The **Contractor** shall not commit or permit any act which will interfere with the performance of work by any **Other Contractors**.

12.2 If the **Engineer** determines that the **Contractor** is failing to coordinate its **Work** with the work of **Other Contractors** as the **Engineer** has directed, then the **Commissioner** shall have the right to withhold any payments otherwise due hereunder until the **Contractor** completely complies with the **Engineer's** directions.

12.3 The **Contractor** shall notify the **Engineer** in writing if any **Other Contractor** on this **Project** is failing to coordinate its work with the **Work** of this **Contract**. If the **Engineer** finds such charges to be true, the **Engineer** shall promptly issue such directions to the **Other Contractor** with respect thereto as the situation may require. The **City** shall not, however, be liable for any damages suffered by any **Other Contractor's** failure to coordinate its work with the **Work** of this **Contract** or by reason of the **Other Contractor's** failure to promptly comply with the directions so issued by the **Engineer**, or by reason of any **Other Contractor's** default in performance, it being understood that the **City** does not guarantee the responsibility or continued efficiency of any contractor. The **Contractor** agrees to make no claim against

the **City** for any damages relating to or arising out of any directions issued by the **Engineer** pursuant to this Article 12 (including but not limited to the failure of any **Other Contractor** to comply or promptly comply with such directions), or the failure of the **Engineer** to issue any directions, or the failure of any **Other Contractor** to coordinate its work, or the default in performance of any **Other Contractor**.

12.4 The **Contractor** shall indemnify and hold the **City** harmless from any and all claims or judgments for damages and from costs and expenses to which the **City** may be subjected or which it may suffer or incur by reason of the **Contractor's** failure to comply with the **Engineer's** directions promptly; and the **Comptroller** shall have the right to exercise the powers reserved in Article 23 with respect to any claims which may be made for damages due to the **Contractor's** failure to comply with the **Engineer's** directions promptly. Insofar as the facts and **Law** relating to any claim would preclude the **City** from being completely indemnified by the **Contractor**, the **City** shall be partially indemnified by the **Contractor** to the fullest extent provided by **Law**.

12.5 Should the **Contractor** sustain any damage through any act or omission of any **Other Contractor** having a contract with the **City** for the performance of work upon the **Site** or of work which may be necessary to be performed for the proper prosecution of the **Work** to be performed hereunder, or through any act or omission of a subcontractor of such **Other Contractor**, the **Contractor** shall have no claim against the **City** for such damage, but shall have a right to recover such damage from the **Other Contractor** under the provision similar to the following provisions which apply to this **Contract** and have been or will be inserted in the contracts with such **Other Contractors**:

> 12.5.1 Should any **Other Contractor** having or who shall hereafter have a contract with the **City** for the performance of work upon the **Site** sustain any damage through any act or omission of the **Contractor** hereunder or through any act or omission of any **Subcontractor** of the **Contractor**, the **Contractor** agrees to reimburse such **Other Contractor** for all such damages and to defend at its own expense any action based upon such claim and if any judgment or claim (even if the allegations of the action are without merit) against the **City** shall be allowed the **Contractor** shall pay or satisfy such judgment or claim and pay all costs and expenses in connection therewith and agrees to indemnify and hold the **City** harmless from all such claims. Insofar as the facts and **Law** relating to any claim would preclude the **City** from being completely indemnified by the **Contractor**, the **City** shall be partially indemnified by the **Contractor** to the fullest extent provided by **Law**.

12.6 The **City's** right to indemnification hereunder shall in no way be diminished, waived or discharged by its recourse to assessment of liquidated damages as provided in Article 15, or by the exercise of any other remedy provided for by **Contract** or by **Law**.

ARTICLE 13. EXTENSION OF TIME FOR PERFORMANCE

13.1 If performance by the **Contractor** is delayed for a reason set forth in Article 13.3, the **Contractor** may be allowed a reasonable extension of time in conformance with this Article 13 and the **PPB** Rules.

13.2 Any extension of time may be granted only by the **ACCO** or by the Board for the Extension of Time (hereafter "Board") (as set forth below) upon written application by the **Contractor**.

13.3 Grounds for Extension: If such application is made, the **Contractor** shall be entitled to an extension of time for delay in completion of the **Work** caused solely:

> 13.3.1 By the acts or omissions of the **City**, its officials, agents or employees; or

13.3.2 By the act or omissions of **Other Contractors** on this **Project**; or

13.3.3 By supervening conditions entirely beyond the control of either party hereto (such as, but not limited to, acts of God or the public enemy, excessive inclement weather, war or other national emergency making performance temporarily impossible or illegal, or strikes or labor disputes not brought about by any act or omission of the **Contractor**).

13.3.4 The **Contractor** shall, however, be entitled to an extension of time for such causes only for the number of **Days** of delay which the **ACCO** or the Board may determine to be due solely to such causes, and then only if the **Contractor** shall have strictly complied with all of the requirements of Articles 9 and 10.

13.4 The **Contractor** shall not be entitled to receive a separate extension of time for each of several causes of delay operating concurrently, but, if at all, only for the actual period of delay in completion of the **Work** as determined by the **ACCO** or the Board, irrespective of the number of causes contributing to produce such delay. If one of several causes of delay operating concurrently results from any act, fault or omission of the **Contractor** or of its **Subcontractors** or **Materialmen**, and would of itself (irrespective of the concurrent causes) have delayed the **Work**, no extension of time will be allowed for the period of delay resulting from such act, fault or omission.

13.5 The determination made by the **ACCO** or the Board on an application for an extension of time shall be binding and conclusive on the **Contractor**.

13.6 The **ACCO** or the Board acting entirely within their discretion may grant an application for an extension of time for causes of delay other than those herein referred.

13.7 Permitting the **Contractor** to continue with the **Work** after the time fixed for its completion has expired, or after the time to which such completion may have been extended has expired, or the making of any payment to the **Contractor** after such time, shall in no way operate as a waiver on the part of the **City** of any of its rights under this **Contract**.

13.8 Application for Extension of Time:

13.8.1 Before the **Contractor's** time extension request will be considered, the **Contractor** shall notify the **ACCO** of the condition which allegedly has caused or is causing the delay, and shall submit a written application to the **ACCO** identifying:

13.8.1(a) The **Contractor**; the registration number; and **Project** description;

13.8.1(b) Liquidated damage assessment rate, as specified in the **Contract**;

13.8.1(c) Original total bid price;

13.8.1(d) The original **Contract** start date and completion date;

13.8.1(e) Any previous time extensions granted (number and duration); and

13.8.1(f) The extension of time requested.

13.8.2 In addition, the application for extension of time shall set forth in detail:

13.8.2(a) The nature of each alleged cause of delay in completing the **Work**;

13.8.2(b) The date upon which each such cause of delay began and ended and the number of **Days** attributable to each such cause;

13.8.2(c) A statement that the **Contractor** waives all claims except for those delineated in the application, and the particulars of any claims which the **Contractor** does not agree to waive. For time extensions for **Substantial Completion** and final completion payments, the application shall include a detailed statement of the dollar amounts of each element of claim item reserved; and

13.8.2(d) A statement indicating the **Contractor's** understanding that the time extension is granted only for purposes of permitting continuation of **Contract** performance and payment for **Work** performed and that the **City** retains its right to conduct an investigation and assess liquidated damages as appropriate in the future.

13.9 Analysis and Approval of Time Extensions:

13.9.1 For time extensions for partial payments, a written determination shall be made by the **ACCO** who may, for good and sufficient cause, extend the time for the performance of the **Contract** as follows:

13.9.1(a) If the **Work** is to be completed within six (6) months, the time for performance may be extended for sixty (60) **Days**;

13.9.1(b) If the **Work** is to be completed within less than one (1) year but more than six (6) months, an extension of ninety (90) **Days** may be granted;

13.9.1(c) If the **Contract** period exceeds one (1) year, besides the extension granted in Article 13.9.1(b), an additional thirty (30) **Days** may be granted for each multiple of six (6) months involved beyond the one (1) year period; or

13.9.1(d) If exceptional circumstances exist, the **ACCO** may extend the time for performance beyond the extensions in Articles 13.9.1(a), 13.9.1(b), and 13.9.1(c). In that event, the **ACCO** shall file with the Mayor's Office of Contract Services a written explanation of the exceptional circumstances.

13.9.2 For extensions of time for **Substantial Completion** and final completion payments, the **Engineer**, in consultation with the **ACCO**, shall prepare a written analysis of the delay (including a preliminary determination of the causes of delay, the beginning and end dates for each such cause of delay, and whether the delays are excusable under the terms of this **Contract**). The report shall be subject to review by and approval of the Board, which shall have authority to question its analysis and determinations and request additional facts or documentation. The report as reviewed and made final by the Board shall be made a part of the **Agency** contract file. Neither the report itself nor anything contained therein shall operate as a waiver or release of any claim the **City** may have against the **Contractor** for either actual or liquidated damages.

13.9.3 Approval Mechanism for Time Extensions for **Substantial Completion** or Final Completion Payments: An extension shall be granted only with the approval of the Board which is comprised of the **ACCO** of the **Agency**, the **City** Corporation Counsel, and the **Comptroller**, or their authorized representatives.

13.9.4 Neither the granting of any application for an extension of time to the **Contractor** or any **Other Contractor** on this **Project** nor the papers, records or reports related to any application for or grant of an extension of time or determination related thereto shall be referred to or offered in evidence by the **Contractor** or its attorneys in any action or proceeding.

13.10 No Damage for Delay: The **Contractor** agrees to make no claim for damages for delay in the performance of this **Contract** occasioned by any act or omission to act of the **City** or any of its representatives, except as provided for in Article 11.

ARTICLE 14. COMPLETION AND FINAL ACCEPTANCE OF THE WORK

14.1 Date for **Substantial Completion:** The **Contractor** shall substantially complete the **Work** within the time fixed in Schedule A of the General Conditions, or within the time to which such **Substantial Completion** may be extended.

14.2 Determining the Date of **Substantial Completion**: The **Work** will be deemed to be substantially complete when the two conditions set forth below have been met.

14.2.1 Inspection: The **Engineer** has inspected the **Work** and has made a written determination that it is substantially complete.

14.2.2 Approval of **Final Approved Punch List** and Date for **Final Acceptance**: Following inspection of the **Work**, the **Engineer** shall furnish the **Contractor** with a final punch list, specifying all items of **Work** to be completed and proposing dates for the completion of each specified item of **Work**. The **Contractor** shall then submit in writing to the **Engineer** within ten (10) **Days** of the **Engineer** furnishing the final punch list either acceptance of the dates or proposed alternative dates for the completion of each specified item of **Work**. If the **Contractor** proposes alternative dates, then, within a reasonable time after receipt, the **Engineer**, in a written notification to the **Contractor**, shall approve the **Contractor's** completion dates or, if they are unable to agree, the Engineer shall establish dates for the completion of each item of **Work**. If the **Contractor** neither accepts the dates nor proposes alternative dates within ten (10) **Days**, the schedule proposed by the **Engineer** shall be deemed accepted. The latest completion date specified shall be the date for **Final Acceptance** of the **Work**.

14.3 Date of **Substantial Completion**. The date of approval of the **Final Approved Punch List**, shall be the date of **Substantial Completion**. The date of approval of the **Final Approved Punch List** shall be either (a) if the **Contractor** approves the final punch list and proposed dates for completion furnished by the **Engineer**, the date of the **Contractor**'s approval; or (b) if the **Contractor** neither accepts the dates nor proposes alternative dates, ten (10) **Days** after the **Engineer** furnishes the **Contractor** with a final punch list and proposed dates for completion; or (c) if the **Contractor** proposes alternative dates, the date that the **Engineer** sends written notification to the **Contractor** either approving the **Contractor**'s proposed alternative dates or establishing dates for the completion for each item of **Work**.

14.4 Determining the Date of **Final Acceptance**: The **Work** will be accepted as final and complete as of the date of the **Engineer's** inspection if, upon such inspection, the **Engineer** finds that all items on the **Final Approved Punch List** are complete and no further **Work** remains to be done. The **Commissioner** will then issue a written determination of **Final Acceptance**.

14.5 Request for Inspection: Inspection of the **Work** by the **Engineer** for the purpose of **Substantial Completion** or **Final Acceptance** shall be made within ten (10) **Days** after receipt of the **Contractor's** written request therefor.

14.6 Request for Re-inspection: If upon inspection for the purpose of **Substantial Completion** or **Final Acceptance**, the **Engineer** determines that there are items of **Work** still to be performed, the **Contractor** shall promptly perform them and then request a re-inspection. If upon re-inspection, the **Engineer** determines that the **Work** is substantially complete or finally accepted, the date of such re-inspection shall be the date of **Substantial Completion** or **Final Acceptance**. Re-inspection by the **Engineer** shall be made within ten (10) **Days** after receipt of the **Contractor's** written request therefor.

14.7 Initiation of Inspection by the **Engineer**: If the **Contractor** does not request inspection or re-inspection of the **Work** for the purpose of **Substantial Completion** or **Final Acceptance**, the **Engineer** may initiate such inspection or re-inspection.

ARTICLE 15. LIQUIDATED DAMAGES

15.1 In the event the **Contractor** fails to substantially complete the **Work** within the time fixed for such **Substantial Completion** in Schedule A of the General Conditions, plus authorized time extensions, or if the **Contractor**, in the sole determination of the **Commissioner**, has abandoned the **Work**, the **Contractor** shall pay to the **City** the sum fixed in Schedule A of the General Conditions, for each and every **Day** that the time consumed in substantially completing the **Work** exceeds the time allowed therefor; which said sum, in view of the difficulty of accurately ascertaining the loss which the **City** will suffer by reason of delay in the **Substantial Completion** of the **Work** hereunder, is hereby fixed and agreed as the liquidated damages that the **City** will suffer by reason of such delay, and not as a penalty. This Article 15 shall also apply to the **Contractor** whether or not the **Contractor** is defaulted pursuant to Chapter X of this **Contract**. Neither the failure to assess liquidated damages nor the granting of any time extension shall operate as a waiver or release of any claim the **City** may have against the **Contractor** for either actual or liquidated damages.

15.2 Liquidated damages received hereunder are not intended to be nor shall they be treated as either a partial or full waiver or discharge of the **City's** right to indemnification, or the **Contractor's** obligation to indemnify the **City**, or to any other remedy provided for in this **Contract** or by **Law**.

15.3 The **Commissioner** may deduct and retain out of the monies which may become due hereunder, the amount of any such liquidated damages; and in case the amount which may become due hereunder shall be less than the amount of liquidated damages suffered by the **City**, the **Contractor** shall be liable to pay the difference.

ARTICLE 16. OCCUPATION OR USE PRIOR TO COMPLETION

16.1 Unless otherwise provided for in the **Specifications**, the **Commissioner** may take over, use, occupy or operate any part of the **Work** at any time prior to **Final Acceptance**, upon written notification to the **Contractor**. The **Engineer** shall inspect the part of the **Work** to be taken over, used, occupied, or operated, and will furnish the **Contractor** with a written statement of the **Work**, if any, which remains to be performed on such part. The **Contractor** shall not object to, nor interfere with, the **Commissioner's** decision to exercise the rights granted by Article 16. In the event the **Commissioner** takes over, uses, occupies, or operates any part of the **Work:**

16.1.1 the **Engineer** shall issue a written determination of **Substantial Completion** with respect to such part of the **Work**;

16.1.2 the **Contractor** shall be relieved of its absolute obligation to protect such part of the unfinished **Work** in accordance with Article 7;

16.1.3 the **Contractor's** guarantee on such part of the **Work** shall begin on the date of such use by the **City**; and;

16.1.4 the **Contractor** shall be entitled to a return of so much of the amount retained in accordance with Article 21 as it relates to such part of the **Work**, except so much thereof as may be retained under Articles 24 and 44.

CHAPTER IV
SUBCONTRACTS AND ASSIGNMENTS

ARTICLE 17. SUBCONTRACTS

17.1 The **Contractor** shall not make subcontracts totaling an amount more than the percentage of the total **Contract** price fixed in Schedule A of the General Conditions, without prior written permission from the **Commissioner**. All subcontracts made by the **Contractor** shall be in writing. No **Work** may be performed by a **Subcontractor** prior to the **Contractor** entering into a written subcontract with the **Subcontractor** and complying with the provisions of this Article 17.

17.2 Before making any subcontracts, the **Contractor** shall submit a written statement to the **Commissioner** giving the name and address of the proposed **Subcontractor**; the portion of the **Work** and materials which it is to perform and furnish; the cost of the subcontract; the VENDEX questionnaire if required; the proposed subcontract if requested by the **Commissioner**; and any other information tending to prove that the proposed **Subcontractor** has the necessary facilities, skill, integrity, past experience, and financial resources to perform the **Work** in accordance with the terms and conditions of this **Contract**.

17.3 In addition to the requirements in Article 17.2, **Contractor** is required to list the **Subcontractor** in the web based Subcontractor Reporting System through the City's Payee Information Portal (PIP), available at www.nyc.gov/pip.[1] For each **Subcontractor** listed, **Contractor** is required to provide the following information: maximum contract value, description of **Subcontractor's** Work, start and end date of the subcontract and identification of the **Subcontractor**'s industry. Thereafter, **Contractor** will be required to report in the system the payments made to each **Subcontractor** within 30 days of making the payment. If any of the required information changes throughout the Term of the **Contract, Contractor** will be required to revise the information in the system.

Failure of the **Contractor** to list a **Subcontractor** and/or to report **Subcontractor** payments in a timely fashion may result in the **Commissioner** declaring the **Contractor** in default of the **Contract** and will subject **Contractor** to liquidated damages in the amount of $100 per day for each day that the **Contractor** fails to identify a **Subcontractor** along with the required information about the **Subcontractor** and/or fails to report payments to a **Subcontractor**, beyond the time frames set forth herein or in the notice from the **City**. Article 15 shall govern the issue of liquidated damages.

---

[1] In order to use the new system, a PIP account will be required. Detailed instructions on creating a PIP account and using the new system are also available at www.nyc.gov/pip. Additional assistance with PIP may be obtained by emailing the Financial Information Services Agency Help Desk at pip@fisa.nyc.gov.

17.4 If an approved **Subcontractor** elects to subcontract any portion of its subcontract, the proposed sub-subcontract shall be submitted in the same manner as directed above.

17.5 The **Commissioner** will notify the **Contractor** in writing whether the proposed **Subcontractor** is approved. If the proposed **Subcontractor** is not approved, the **Contractor** may submit another proposed **Subcontractor** unless the **Contractor** decides to do the **Work**. No **Subcontractor** shall be permitted to enter or perform any work on the **Site** unless approved.

17.6 Before entering into any subcontract hereunder, the **Contractor** shall provide the proposed **Subcontractor** with a complete copy of this document and inform the proposed **Subcontractor** fully and completely of all provisions and requirements of this **Contract** relating either directly or indirectly to the **Work** to be performed and the materials to be furnished under such subcontract, and every such **Subcontractor** shall expressly stipulate that all labor performed and materials furnished by the **Subcontractor** shall strictly comply with the requirements of this **Contract**.

17.7 Documents given to a prospective **Subcontractor** for the purpose of soliciting the **Subcontractor's** bid shall include either a copy of the bid cover or a separate information sheet setting forth the **Project** name, the **Contract** number (if available), the **Agency** (as noted in Article 2.1.6), and the **Project's** location.

17.8 The **Commissioner's** approval of a **Subcontractor** shall not relieve the **Contractor** of any of its responsibilities, duties, and liabilities hereunder. The **Contractor** shall be solely responsible to the **City** for the acts or defaults of its **Subcontractor** and of such **Subcontractor's** officers, agents, and employees, each of whom shall, for this purpose, be deemed to be the agent or employee of the **Contractor** to the extent of its subcontract.

17.9 If the **Subcontractor** fails to maintain the necessary facilities, skill, integrity, past experience, and financial resources (other than due to the **Contractor's** failure to make payments where required) to perform the **Work** in accordance with the terms and conditions of this **Contract**, the **Contractor** shall promptly notify the **Commissioner** and replace such **Subcontractor** with a newly approved **Subcontractor** in accordance with this Article 17.

17.10 The **Contractor** shall be responsible for ensuring that all **Subcontractors** performing **Work** at the **Site** maintain all insurance required by **Law**.

17.11 The **Contractor** shall promptly, upon request, file with the **Engineer** a conformed copy of the subcontract and its cost. The subcontract shall provide the following:

17.11.1 Payment to **Subcontractors**: The agreement between the **Contractor** and its **Subcontractor** shall contain the same terms and conditions as to method of payment for **Work**, labor, and materials, and as to retained percentages, as are contained in this **Contract**.

17.11.2 Prevailing Rate of Wages: The agreement between the **Contractor** and its **Subcontractor** shall include the prevailing wage rates and supplemental benefits to be paid in accordance with Labor Law Section 220.

17.11.3 Section 6-123 of the Administrative Code: Pursuant to the requirements of Section 6-123 of the Administrative Code, every agreement between the **Contractor** and a **Subcontractor** in excess of fifty thousand ($50,000) dollars shall include a provision that the **Subcontractor** shall not engage in any unlawful discriminatory practice as defined in Title VIII of the Administrative Code (Section 8-101 *et seq.*).

17.11.4 All requirements required pursuant to federal and/or state grant agreement(s), if applicable to the **Work**.

17.12 The **Commissioner** may deduct from the amounts certified under this **Contract** to be due to the **Contractor**, the sum or sums due and owing from the **Contractor** to the **Subcontractors** according to the terms of the said subcontracts, and in case of dispute between the **Contractor** and its **Subcontractor**, or **Subcontractors**, as to the amount due and owing, the **Commissioner** may deduct and withhold from the amounts certified under this **Contract** to be due to the **Contractor** such sum or sums as may be claimed by such **Subcontractor**, or **Subcontractors**, in a sworn affidavit, to be due and owing until such time as such claim or claims shall have been finally resolved.

17.13 On contracts where performance bonds and payment bonds are executed, the **Contractor** shall include on each requisition for payment the following data: **Subcontractor's** name, value of the subcontract, total amount previously paid to **Subcontractor** for **Work** previously requisitioned, and the amount, including retainage, to be paid to the **Subcontractor** for **Work** included in the requisition.

17.14 On **Contracts** where performance bonds and payment bonds are not executed, the **Contractor** shall include with each requisition for payment submitted hereunder, a signed statement from each and every **Subcontractor** and/or **Materialman** for whom payment is requested in such requisition. Such signed statement shall be on the letterhead of the **Subcontractor** and/or **Materialman** for whom payment is requested and shall (i) verify that such **Subcontractor** and/or **Materialman** has been paid in full for all **Work** performed and/or material supplied to date, exclusive of any amount retained and any amount included on the current requisition, and (ii) state the total amount of retainage to date, exclusive of any amount retained on the current requisition.

ARTICLE 18. ASSIGNMENTS

18.1 The **Contractor** shall not assign, transfer, convey or otherwise dispose of this **Contract**, or the right to execute it, or the right, title or interest in or to it or any part thereof, or assign, by power of attorney or otherwise any of the monies due or to become due under this **Contract**, unless the previous written consent of the **Commissioner** shall first be obtained thereto, and the giving of any such consent to a particular assignment shall not dispense with the necessity of such consent to any further or other assignments.

18.2 Such assignment, transfer, conveyance or other disposition of this **Contract** shall not be valid until filed in the office of the **Commissioner** and the **Comptroller**, with the written consent of the **Commissioner** endorsed thereon or attached thereto.

18.3 Failure to obtain the previous written consent of the **Commissioner** to such an assignment, transfer, conveyance or other disposition, may result in the revocation and annulment of this **Contract**. The **City** shall thereupon be relieved and discharged from any further liability to the **Contractor**, its assignees, transferees or sublessees, who shall forfeit and lose all monies therefor earned under the **Contract**, except so much as may be required to pay the **Contractor's** employees.

18.4 The provisions of this clause shall not hinder, prevent, or affect an assignment by the **Contractor** for the benefit of its creditors made pursuant to the **Laws** of the State of New York.

18.5 This **Contract** may be assigned by the **City** to any corporation, agency or instrumentality having authority to accept such assignment.

CHAPTER V
CONTRACTOR'S SECURITY AND GUARANTEE

ARTICLE 19. SECURITY DEPOSIT

19.1 If performance and payment bonds are required, the **City** shall retain the bid security to ensure that the successful bidder executes the **Contract** and furnishes the required payment and performance security within ten (10) **Days** after notice of the award of the **Contract**. If the successful bidder fails to execute the **Contract** and furnish the required payment and performance security, the **City** shall retain such bid security as set forth in the Information for Bidders. If the successful bidder executes the **Contract** and furnishes the required payment and performance security, the **City** shall return the bid security within a reasonable time after the furnishing of such bonds and execution of the **Contract** by the **City**.

19.2 If performance and payment bonds are not required, the bid security shall be retained by the **City** as security for the **Contractor**'s faithful performance of the **Contract**. If partial payments are provided, the bid security will be returned to the **Contractor** after the sum retained under Article 21 equals the amount of the bid security, subject to other provisions of this **Contract**. If partial payments are not provided, the bid security will be released when final payment is certified by the **City** for payment.

19.3 If the **Contractor** is declared in default under Article 48 prior to the return of the deposit, or if any claim is made such as referred to in Article 23, the amount of such deposit, or so much thereof as the **Comptroller** may deem necessary, may be retained and then applied by the **Comptroller**:

19.3.1 To compensate the **City** for any expense, loss or damage suffered or incurred by reason of or resulting from such default, including the cost of re-letting and liquidated damages; or

19.3.2 To indemnify the **City** against any and all claims.

ARTICLE 20. PAYMENT GUARANTEE

20.1 On **Contracts** where one hundred (100%) percent performance bonds and payment bonds are executed, this Article 20 does not apply.

20.2 In the event the terms of this **Contract** do not require the **Contractor** to provide a payment bond or where the **Contract** does not requite a payment bond for one hundred (100%) percent of the **Contract** price, the **City** shall, in accordance with the terms of this Article 20, guarantee payment of all lawful claims for:

20.2.1 Wages and compensation for labor performed and/or services rendered; and

20.2.2 Materials, equipment, and supplies provided, whether incorporated into the **Work** or not, when demands have been filed with the **City** as provided hereinafter by any person, firm, or corporation which furnished labor, material, equipment, supplies, or any combination thereof, in connection with the **Work** performed hereunder (hereinafter referred to as the "beneficiary") at the direction of the **City** or the **Contractor**.

20.3 The provisions of Article 20.2 are subject to the following limitations and conditions:

20.3.1 If the **Contractor** provides a payment bond for a value that is less than one hundred (100%) percent of the value of the **Contract Work**, the payment bond provided by the **Contractor** shall be primary (and non-contributing) to the payment guarantee provided under this Article 20.

20.3.2 The guarantee is made for the benefit of all beneficiaries as defined in Article 20.2 provided that those beneficiaries strictly adhere to the terms and conditions of Article 20.3.4 and 20.3.5.

20.3.3 Nothing in this Article 20 shall prevent a beneficiary providing labor, services or material for the **Work** from suing the **Contractor** for any amounts due and owing the beneficiary by the **Contractor**.

20.3.4 Every person who has furnished labor or material, to the **Contractor** or to a **Subcontractor** of the **Contractor**, in the prosecution of the **Work** and who has not been paid in full therefor before the expiration of a period of ninety (90) **Days** after the date on which the last of the labor was performed or material was furnished by him/her for which the claim is made, shall have the right to sue on this payment guarantee in his/her own name for the amount, or the balance thereof, unpaid at the time of commencement of the action; provided, however, that a person having a direct contractual relationship with a **Subcontractor** of the **Contractor** but no contractual relationship express or implied with the **Contractor** shall not have a right of action upon the guarantee unless he/she shall have given written notice to the **Contractor** within one hundred twenty (120) **Days** from the date on which the last of the labor was performed or the last of the material was furnished, for which his/her claim is made, stating with substantial accuracy the amount claimed and the name of the party to whom the material was furnished or for whom the labor was performed. The notice shall be served by delivering the same personally to the **Contractor** or by mailing the same by registered mail, postage prepaid, in an envelope addressed to the **Contractor** at any place where it maintains an office or conducts its business; provided, however, that where such notice is actually received by the **Contractor** by other means, such notice shall be deemed sufficient.

20.3.5 Except as provided in Labor Law Section 220-g, no action on this payment guarantee shall be commenced after the expiration of the one-year limitations period set forth in Section 137(4)(b) of the State Finance Law.

20.3.6 The **Contractor** shall promptly forward to the **City** any notice or demand received pursuant to Article 20.3.4. The **Contractor** shall inform the **City** of any defenses to the notice or demand and shall forward to the **City** any documents the **City** requests concerning the notice or demand.

20.3.7 All demands made against the **City** by a beneficiary of this payment guarantee shall be presented to the **Engineer** along with all written documentation concerning the demand which the **Engineer** deems reasonably appropriate or necessary, which may include, but shall not be limited to: the subcontract; any invoices presented to the **Contractor** for payment; the notarized statement of the beneficiary that the demand is due and payable, that a request for payment has been made of the **Contractor** and that the demand has not been paid by the **Contractor** within the time allowed for such payment by the subcontract; and copies of any correspondence between the beneficiary and the **Contractor** concerning such demand. The **City** shall notify the **Contractor** that a demand has been made. The **Contractor** shall inform the **City** of any defenses to the demand and shall forward to the **City** any documents the **City** requests concerning the demand.

20.3.8 The **City** shall make payment only if, after considering all defenses presented by the **Contractor**, it determines that the payment is due and owing to the beneficiary making the demand.

20.3.9 No beneficiary shall be entitled to interest from the **City**, or to any other costs, including, but not limited to, attorneys' fees, except to the extent required by State Finance Law Section 137.

20.4 Upon the receipt by the **City** of a demand pursuant to this Article 20, the **City** may withhold from any payment otherwise due and owing to the **Contractor** under this **Contract** an amount sufficient to satisfy the demand.

20.4.1 In the event the **City** determines that the demand is valid, the **City** shall notify the **Contractor** of such determination and the amount thereof and direct the **Contractor** to immediately pay such amount to the beneficiary. In the event the **Contractor**, within seven (7) **Days** of receipt of such notification from the **City**, fails to pay the beneficiary, such failure shall constitute an automatic and irrevocable assignment of payment by the **Contractor** to the beneficiary for the amount of the demand determined by the **City** to be valid. The **Contractor**, without further notification or other process, hereby gives its unconditional consent to such assignment of payment to the beneficiary and authorizes the **City**, on its behalf, to take all necessary actions to implement such assignment of payment, including without limitation the execution of any instrument or documentation necessary to effectuate such assignment.

20.4.2In the event that the amount otherwise due and owing to the **Contractor** by the **City** is insufficient to satisfy such demand, the **City** may, at its option, require payment from the **Contractor** of an amount sufficient to cover such demand and exercise any other right to require or recover payment which the **City** may have under **Law** or **Contract**.

20.4.3 In the event the **City** determines that the demand is invalid, any amount withheld pending the **City**'s review of such demand shall be paid to the **Contractor**; provided, however, no lien has been filed. In the event a claim or an action has been filed, the terms and conditions set forth in Article 23 shall apply. In the event a lien has been filed, the parties will be governed by the provisions of the Lien Law of the State of New York.

20.5 The provisions of this Article 20 shall not prevent the **City** and the **Contractor** from resolving disputes in accordance with the **PPB** Rules, where applicable.

20.6 In the event the **City** determines that the beneficiary is entitled to payment pursuant to this Article 20, such determination and any defenses and counterclaims raised by the **Contractor** shall be taken into account in evaluating the **Contractor's** performance.

20.7 Nothing in this Article 20 shall relieve the **Contractor** of the obligation to pay the claims of all persons with valid and lawful claims against the **Contractor** relating to the **Work**.

20.8 The **Contractor** shall not require any performance, payment or other bonds of any **Subcontractor** if this **Contract** does not require such bonds of the **Contractor**.

20.9 The payment guarantee made pursuant to this Article 20 shall be construed in a manner consistent with Section 137 of the State Finance Law and shall afford to persons furnishing labor or materials to the **Contractor** or its **Subcontractors** in the prosecution of the **Work** under this **Contract** all of the rights and remedies afforded to such persons by such section, including but not limited to, the right

to commence an action against the **City** on the payment guarantee provided by this Article 20 within the one-year limitations period set forth in Section 137(4)(b).

ARTICLE 21. RETAINED PERCENTAGE

21.1 If this **Contract** requires one hundred (100%) percent performance and payment security, then as further security for the faithful performance of this **Contract**, the **Commissioner** shall deduct, and retain until the substantial completion of the **Work**, five (5%) percent of the value of **Work** certified for payment in each partial payment voucher.

21.2 If this **Contract** does not require one hundred (100%) percent performance and payment security and if the price for which this **Contract** was awarded does not exceed one million ($1,000,000) dollars, then as further security for the faithful performance of this **Contract**, the **Commissioner** shall deduct, and retain until the substantial completion of the **Work**, five (5%) percent of the value of **Work** certified for payment in each partial payment voucher.

21.3 If this **Contract** does not require one hundred (100%) percent performance and payment security and if the price for which this **Contract** was awarded exceeds one million ($1,000,000) dollars, then as further security for the faithful performance of this **Contract,** the **Commissioner** shall deduct, and retain until the substantial completion of the **Work**, up to ten (10%) percent of the value of **Work** certified for payment in each partial payment voucher. The percentage to be retained is set forth in Schedule A of the General Conditions.

ARTICLE 22. INSURANCE

22.1 Types of Insurance: The **Contractor** shall procure and maintain the following types of insurance if, and as indicated, in Schedule A of the General Conditions (with the minimum limits and special conditions specified in Schedule A). Such insurance shall be maintained from the date the **Contractor** is required to provide Proof of Insurance pursuant to Article 22.3.1 through the date of completion of all required **Work** (including punch list work as certified in writing by the **Resident Engineer**), except for insurance required pursuant to Article 22.1.4, which may terminate upon **Substantial Completion** of the **Contract**. All insurance shall meet the requirements set forth in this Article 22. Wherever this Article requires that insurance coverage be "at least as broad" as a specified form (including all ISO forms), there is no obligation that the form itself be used, provided that the **Contractor** can demonstrate that the alternative form or endorsement contained in its policy provides coverage at least as broad as the specified form.

22.1.1 Commercial General Liability Insurance: The **Contractor** shall provide Commercial General Liability Insurance covering claims for property damage and/or bodily injury, including death, which may arise from any of the operations under this **Contract**. Coverage under this insurance shall be at least as broad as that provided by the latest edition of Insurance Services Office ("ISO") Form CG 0001. Such insurance shall be "occurrence" based rather than "claims-made" and include, without limitation, the following types of coverage: premises operations; products and completed operations; contractual liability (including the tort liability of another assumed in a contract); broad form property damage; independent contractors; explosion, collapse and underground (XCU); construction means and methods; and incidental malpractice. Such insurance shall contain a "per project" aggregate limit, as specified in Schedule A, that applies separately to operations under this **Contract**.

22.1.1(a) Such Commercial General Liability Insurance shall name the **City** as an Additional Insured. Coverage for the City shall specifically include the **City's** officials and employees, be at least as broad as the latest edition of ISO Form CG 20 10 and provide completed operations coverage at least as broad as the latest edition of ISO Form CG 20 37.

22.1.1(b) Such Commercial General Liability Insurance shall name all other entities designated as additional insureds in Schedule A but only for claims arising from the **Contractor's** operations under this **Contract**, with coverage at least as broad as the latest edition of ISO Form CG 20 26.

22.1.1(c) If the **Work** requires a permit from the Department of Buildings pursuant to 1 RCNY Section 101-08, at http://www.nyc.gov/html/dob/downloads/rules/1_RCNY_101-08.pdf, the **Contractor** shall provide Commercial General Liability Insurance with limits of at least those required by 1 RCNY section 101-08. If the **Work** does not require such a permit, the minimum limits shall be those provided for in Schedule A.

22.1.1(d) If any of the **Work** includes repair of a waterborne vessel owned by or to be delivered to the **City**, such Commercial General Liability shall include, or be endorsed to include, Ship Repairer's Legal Liability Coverage to protect against, without limitation, liability arising from navigation of such vessels prior to delivery to and acceptance by the **City**.

22.1.2 Workers' Compensation Insurance, Employers' Liability Insurance, and Disability Benefits Insurance: The **Contractor** shall provide, and shall cause its **Subcontractors** to provide, Workers Compensation Insurance, Employers' Liability Insurance, and Disability Benefits Insurance in accordance with the **Laws** of the State of New York on behalf of all employees providing services under this **Contract** (except for those employees, if any, for which the **Laws** require insurance only pursuant to Article 22.1.3).

22.1.3 United States Longshoremen's and Harbor Workers Act and/or Jones Act Insurance: If specified in Schedule A of the General Conditions or if required by **Law**, the **Contractor** shall provide insurance in accordance with the United States Longshoremen's and Harbor Workers Act and/or the Jones Act, on behalf of all qualifying employees providing services under this **Contract**.

22.1.4 Builders Risk Insurance: If specified in Schedule A of the General Conditions, the **Contractor** shall provide Builders Risk Insurance on a completed value form for the total value of the **Work** through **Substantial Completion** of the **Work** in its entirety. Such insurance shall be provided on an All Risk basis and include coverage, without limitation, for windstorm (including named windstorm), storm surge, flood and earth movement. Unless waived by the **Commissioner**, it shall include coverage for ordinance and law, demolition and increased costs of construction, debris removal, pollutant clean up and removal, and expediting costs. Such insurance shall cover, without limitation, (a) all buildings and/or structures involved in the **Work**, as well as temporary structures at the **Site**, and (b) any property that is intended to become a permanent part of such building or structure, whether such property is on the **Site**, in transit or in temporary storage. Policies shall name the **Contractor** as Named Insured and list the **City** as both an Additional Insured and a Loss Payee as its interest may appear.

22.1.4(a) Policies of such insurance shall specify that, in the event a loss occurs at an occupied facility, occupancy of such facility is permitted without the consent of the issuing insurance company.

22.1.4(b) Such insurance may be provided through an Installation Floater, at the **Contractor's** option, if it otherwise conforms with the requirements of this Article 22.1.4.

22.1.5 Commercial Automobile Liability Insurance: The **Contractor** shall provide Commercial Automobile Liability Insurance for liability arising out of ownership, maintenance or use of any owned (if any), non-owned and hired vehicles to be used in connection with this **Contract**. Coverage shall be at least as broad as the latest edition of ISO Form CA0001. If vehicles are used for transporting hazardous materials, the Automobile Liability Insurance shall be endorsed to provide pollution liability broadened coverage for covered vehicles (endorsement CA 99 48) as well as proof of MCS 90.

22.1.6 Contractors Pollution Liability Insurance: If specified in Schedule A of the General Conditions, the **Contractor** shall maintain, or cause the **Subcontractor** doing such **Work** to maintain, Contractors Pollution Liability Insurance covering bodily injury and property damage. Such insurance shall provide coverage for actual, alleged or threatened emission, discharge, dispersal, seepage, release or escape of pollutants (including asbestos), including any loss, cost or expense incurred as a result of any cleanup of pollutants (including asbestos) or in the investigation, settlement or defense of any claim, action, or proceedings arising from the operations under this **Contract**. Such insurance shall be in the **Contractor's** name and list the **City** as an Additional Insured and any other entity specified in Schedule A. Coverage shall include, without limitation, (a) loss of use of damaged property or of property that has not been physically injured, (b) transportation, and (c) non-owned disposal sites.

22.1.6(a) Coverage for the **City** as Additional Insured shall specifically include the **City's** officials and employees and be at least as broad as provided to the **Contractor** for this **Project**.

22.1.6(b) If such insurance is written on a claims-made policy, such policy shall have a retroactive date on or before the effective date of this **Contract**, and continuous coverage shall be maintained, or an extended discovery period exercised, for a period of not less than three (3) years from the time the **Work** under this **Contract** is completed.

22.1.7 Marine Insurance:

22.1.7(a) Marine Protection and Indemnity Insurance: If specified in Schedule A of the General Conditions or if the **Contractor** engages in marine operations in the execution of any part of the **Work**, the **Contractor** shall maintain, or cause the **Subcontractor** doing such Work to maintain, Marine Protection and Indemnity Insurance with coverage at least as broad as Form SP-23. The insurance shall provide coverage for the **Contractor** or **Subcontractor** (whichever is doing this **Work**) and for the **City** (together with its officials and employees) and any other entity specified in Schedule A as an Additional Insured for bodily injury and property damage arising from marine operations under this **Contract**. Coverage shall include, without limitation, injury or death of crew members (if not fully provided through other insurance), removal of wreck, damage to piers, wharves and other fixed or floating objects and loss of or damage to any other vessel or craft, or to property on such other vessel or craft.

22.1.7(b) Hull and Machinery Insurance: If specified in Schedule A of the General Conditions or if the **Contractor** engages in marine operations in the execution of any part of the **Work**, the **Contractor** shall maintain, or cause the **Subcontractor** doing such **Work** to maintain, Hull and Machinery Insurance with coverage for the **Contractor** or **Subcontractor** (whichever is doing this Work) and for the **City** (together with its officials and employees) as Additional Insured at least as broad as the latest edition of American Institute Tug Form for all tugs used under this **Contract** and Collision Liability at least as broad as the latest edition of American Institute Hull Clauses.

22.1.7(c) Marine Pollution Liability Insurance: If specified in Schedule A of the General Conditions or if the **Contractor** engages in marine operations in the execution of any part of the **Work**, the **Contractor** shall maintain, or cause the **Subcontractor** doing such Work to maintain, Marine Pollution Liability Insurance covering itself (or the Subcontractor doing such Work) as Named Insured and the **City** (together with its officials and employees) and any other entity specified in Schedule A as an Additional Insured. Coverage shall be at least as broad as that provided by the latest edition of Water Quality Insurance Syndicate Form and include, without limitation, liability arising from the discharge or substantial threat of a discharge of oil, or from the release or threatened release of a hazardous substance including injury to, or economic losses resulting from, the destruction of or damage to real property, personal property or natural resources.

22.1.8 The **Contractor** shall provide such other types of insurance, at such minimum limits and with such conditions, as are specified in Schedule A of the General Conditions.

22.2 General Requirements for Insurance Coverage and Policies:

22.2.1 All required insurance policies shall be maintained with companies that may lawfully issue the required policy and have an A.M. Best rating of at least A-/VII or a Standard and Poor's rating of at least A, unless prior written approval is obtained from the **City** Corporation Counsel.

22.2.2 The **Contractor** shall be solely responsible for the payment of all premiums for all required policies and all deductibles and self-insured retentions to which such policies are subject, whether or not the **City** is an insured under the policy.

22.2.3 In his/her sole discretion, the **Commissioner** may, subject to the approval of the **Comptroller** and the **City** Corporation Counsel, accept Letters of Credit and/or custodial accounts in lieu of required insurance.

22.2.4 The **City's** limits of coverage for all types of insurance required pursuant to Schedule A of the General Conditions shall be the greater of (i) the minimum limits set forth in Schedule A or (ii) the limits provided to the **Contractor** as Named Insured under all primary, excess, and umbrella policies of that type of coverage.

22.2.5 The **Contractor** may satisfy its insurance obligations under this Article 22 through primary policies or a combination of primary and excess/umbrella policies, so long as all policies provide the scope of coverage required herein.

22.2.6 Policies of insurance provided pursuant to this Article 22 shall be primary and non-contributing to any insurance or self-insurance maintained by the **City**.

22.3 Proof of Insurance:

22.3.1 For all types of insurance required by Article 22.1 and Schedule A, except for insurance required by Articles 22.1.4 and 22.1.7, the **Contractor** shall file proof of insurance in accordance with this Article 22.3 within ten (10) **Days** of award. For insurance provided pursuant to Articles 22.1.4 and 22.1.7, proof shall be filed by a date specified by the **Commissioner** or ten (10) **Days** prior to the commencement of the portion of the **Work** covered by such policy, whichever is earlier.

22.3.2 For Workers' Compensation Insurance provided pursuant to Article 22.1.2, the **Contractor** shall submit one of the following forms: C-105.2 Certificate of Workers' Compensation Insurance; U-26.3 - State Insurance Fund Certificate of Workers' Compensation Insurance; Request for WC/DB Exemption (Form CE-200); equivalent or successor forms used by the New York State Workers' Compensation Board; or other proof of insurance in a form acceptable to the **Commissioner**. For Disability Benefits Insurance provided pursuant to Article 22.1.2, the Contractor shall submit DB-120.1 - Certificate Of Insurance Coverage Under The NYS Disability Benefits Law, Request for WC/DB Exemption (Form CE-200); equivalent or successor forms used by the New York State Workers' Compensation Board; or other proof of insurance in a form acceptable to the **Commissioner**. ACORD forms are not acceptable.

22.3.3 For policies provided pursuant to all of Article 22.1 other than Article 22.1.2, the **Contractor** shall submit one or more Certificates of Insurance on forms acceptable to the **Commissioner**. All such Certificates of Insurance shall certify (a) the issuance and effectiveness of such policies of insurance, each with the specified minimum limits (b) for insurance secured pursuant to Article 22.1.1 that the **City** and any other entity specified in Schedule A is an Additional Insured with coverage at least as broad as the most recent edition of ISO Forms CG 20 10, CG 20 37, and CG 20 26, as applicable; (c) in the event insurance is required pursuant to Article 22.1.6 and/or Article 22.1.7, that the City is an Additional Insured thereunder; (d) the company code issued to the insurance company by the National Association of Insurance Commissioners (the NAIC number); and (e) the number assigned to the **Contract** by the **City**. All such Certificates of Insurance shall be accompanied by either a duly executed "Certification by Broker" in the form contained in Part III of Schedule A or copies of all policies referenced in such Certificate of Insurance as certified by an authorized representative of the issuing insurance carrier. If any policy is not available at the time of submission, certified binders may be submitted until such time as the policy is available, at which time a certified copy of the policy shall be submitted.

22.3.4 Documentation confirming renewals of insurance shall be submitted to the **Commissioner** prior to the expiration date of coverage of policies required under this **Contract**. Such proofs of insurance shall comply with the requirements of Articles 22.3.2 and 22.3.3.

22.3.5 The **Contractor** shall be obligated to provide the **City** with a copy of any policy of insurance provided pursuant to this Article 22 upon the demand for such policy by the **Commissioner** or the **City** Corporation Counsel.

22.4 Operations of the **Contractor**:

22.4.1 The **Contractor** shall not commence the **Work** unless and until all required certificates have been submitted to and accepted by the **Commissioner**. Acceptance by the **Commissioner** of a certificate does not excuse the **Contractor** from securing insurance

consistent with all provisions of this Article 22 or of any liability arising from its failure to do so.

22.4.2 The **Contractor** shall be responsible for providing continuous insurance coverage in the manner, form, and limits required by this **Contract** and shall be authorized to perform **Work** only during the effective period of all required coverage.

22.4.3 In the event that any of the required insurance policies lapse, are revoked, suspended or otherwise terminated, for whatever cause, the **Contractor** shall immediately stop all **Work**, and shall not recommence **Work** until authorized in writing to do so by the **Commissioner**. Upon quitting the **Site**, except as otherwise directed by the **Commissioner**, the **Contractor** shall leave all plant, materials, equipment, tools, and supplies on the **Site**. **Contract** time shall continue to run during such periods and no extensions of time will be granted. The **Commissioner** may also declare the **Contractor** in default for failure to maintain required insurance.

22.4.4 In the event the **Contractor** receives notice, from an insurance company or other person, that any insurance policy required under this Article 22 shall be cancelled or terminated (or has been cancelled or terminated) for any reason, the **Contractor** shall immediately forward a copy of such notice to both the **Commissioner** and the New York City Comptroller, attn: Office of Contract Administration, Municipal Building, One Centre Street, room 1005, New York, New York 10007. Notwithstanding the foregoing, the **Contractor** shall ensure that there is no interruption in any of the insurance coverage required under this Article 22.

22.4.5 Where notice of loss, damage, occurrence, accident, claim or suit is required under an insurance policy maintained in accordance with this Article 22, the **Contractor** shall notify in writing all insurance carriers that issued potentially responsive policies of any such event relating to any operations under this **Contract** (including notice to Commercial General Liability insurance carriers for events relating to the **Contractor**'s own employees) no later than 20 days after such event. For any policy where the **City** is an Additional Insured, such notice shall expressly specify that "this notice is being given on behalf of the City of New York as Insured as well as the Named Insured." Such notice shall also contain the following information: the number of the insurance policy, the name of the named insured, the date and location of the damage, occurrence, or accident, and the identity of the persons or things injured, damaged or lost. The **Contractor** shall simultaneously send a copy of such notice to the City of New York c/o Insurance Claims Specialist, Affirmative Litigation Division, New York City Law Department, 100 Church Street, New York, New York 10007.

22.4.6 In the event of any loss, accident, claim, action, or other event that does or can give rise to a claim under any insurance policy required under this Article 22, the **Contractor** shall at all times fully cooperate with the **City** with regard to such potential or actual claim.

22.5 **Subcontractor** Insurance: In the event the **Contractor** requires any **Subcontractor** to procure insurance with regard to any operations under this **Contract** and requires such **Subcontractor** to name the **Contractor** as an **Additional Insured** thereunder, the **Contractor** shall ensure that the **Subcontractor** name the **City**, including its officials and employees, as an Additional Insured with coverage at least as broad as the most recent edition of ISO Form CG 20 26.

22.6 Wherever reference is made in Article 7 or this Article 22 to documents to be sent to the **Commissioner** (e.g., notices, filings, or submissions), such documents shall be sent to the address set forth in Schedule A of the General Conditions. In the event no address is set forth in Schedule A, such documents are to be sent to the **Commissioner's** address as provided elsewhere in this **Contract**.

22.7 Apart from damages or losses covered by insurance provided pursuant to Articles 22.1.2, 22.1.3, or 22.1.5, the **Contractor** waives all rights against the **City**, including its officials and employees, for any damages or losses that are covered under any insurance required under this Article 22 (whether or not such insurance is actually procured or claims are paid thereunder) or any other insurance applicable to the operations of the **Contractor** and/or its employees, agents, or **Subcontractors**.

22.8 In the event the **Contractor** utilizes a self-insurance program to satisfy any of the requirements of this Article 22, the **Contractor** shall ensure that any such self-insurance program provides the **City** with all rights that would be provided by traditional insurance under this Article 22, including but not limited to the defense and indemnification obligations that insurers are required to undertake in liability policies.

22.9 Materiality/Non-Waiver: The **Contractor's** failure to secure policies in complete conformity with this Article 22, or to give an insurance company timely notice of any sort required in this **Contract** or to do anything else required by this Article 22 shall constitute a material breach of this **Contract**. Such breach shall not be waived or otherwise excused by any action or inaction by the **City** at any time.

22.10 Pursuant to General Municipal Law Section 108, this **Contract** shall be void and of no effect unless **Contractor** maintains Workers' Compensation Insurance for the term of this **Contract** to the extent required and in compliance with the New York State Workers' Compensation Law.

22.11 Other Remedies: Insurance coverage provided pursuant to this Article 22 or otherwise shall not relieve the **Contractor** of any liability under this **Contract**, nor shall it preclude the **City** from exercising any rights or taking such other actions available to it under any other provisions of this **Contract** or **Law**.

ARTICLE 23. MONEY RETAINED AGAINST CLAIMS

23.1 If any claim shall be made by any person or entity (including **Other Contractors** with the **City** on this **Project**) against the **City** or against the **Contractor** and the **City** for any of the following:

(a) An alleged loss, damage, injury, theft or vandalism of any of the kinds referred to in Articles 7 and 12, plus the reasonable costs of defending the **City**, which in the opinion of the **Comptroller** may not be paid by an insurance company (for any reason whatsoever); or

(b) An infringement of copyrights, patents or use of patented articles, tools, etc., as referred to in Article 57; or

(c) Damage claimed to have been caused directly or indirectly by the failure of the **Contractor** to perform the **Work** in strict accordance with this **Contract,**

the amount of such claim, or so much thereof as the **Comptroller** may deem necessary, may be withheld by the **Comptroller**, as security against such claim, from any money due hereunder. The **Comptroller**, in his/her discretion, may permit the **Contractor** to substitute other satisfactory security in lieu of the monies so withheld.

23.2 If an action on such claim is timely commenced and the liability of the **City**, or the **Contractor**, or both, shall have been established therein by a final judgment of a court of competent jurisdiction, or if such claim shall have been admitted by the **Contractor** to be valid, the **Comptroller**

shall pay such judgment or admitted claim out of the monies retained by the **Comptroller** under the provisions of this Article 23, and return the balance, if any, without interest, to the **Contractor**.

ARTICLE 24. MAINTENANCE AND GUARANTY

24.1 The **Contractor** shall promptly repair, replace, restore or rebuild, as the **Commissioner** may determine, any finished **Work** in which defects of materials or workmanship may appear or to which damage may occur because of such defects, during the one (1) year period subsequent to the date of **Substantial Completion** (or use and occupancy in accordance with Article 16), except where other periods of maintenance and guaranty are provided for in Schedule A.

24.2 As security for the faithful performance of its obligations hereunder, the **Contractor**, upon filing its requisition for payment on **Substantial Completion**, shall deposit with the **Commissioner** a sum equal to one (1%) percent of the price (or the amount fixed in Schedule A of the General Conditions) in cash or certified check upon a state or national bank and trust company or a check of such bank and trust company signed by a duly authorized officer thereof and drawn to the order of the **Comptroller**, or obligations of the **City**, which the **Comptroller** may approve as of equal value with the sum so required.

24.3 In lieu of the above, the **Contractor** may make such security payment to the **City** by authorizing the **Commissioner** in writing to deduct the amount from the **Substantial Completion** payment which shall be deemed the deposit required above.

24.4 If the **Contractor** has faithfully performed all of its obligations hereunder the **Commissioner** shall so certify to the **Comptroller** within five (5) **Days** after the expiration of one (1) year from the date of **Substantial Completion** and acceptance of the **Work** or within thirty (30) **Days** after the expiration of the guarantee period fixed in the **Specifications**. The security payment shall be repaid to the **Contractor** without interest within thirty (30) **Days** after certification by the **Commissioner** to the **Comptroller** that the **Contractor** has faithfully performed all of its obligations hereunder.

24.5 Notice by the **Commissioner** to the **Contractor** to repair, replace, rebuild or restore such defective or damaged **Work** shall be timely, pursuant to this article, if given not later than ten (10) **Days** subsequent to the expiration of the one (1) year period or other periods provided for herein.

24.6 If the **Contractor** shall fail to repair, replace, rebuild or restore such defective or damaged **Work** promptly after receiving such notice, the **Commissioner** shall have the right to have the **Work** done by others in the same manner as provided for in the completion of a defaulted **Contract**, under Article 51.

24.7 If the security payment so deposited is insufficient to cover the cost of such **Work**, the **Contractor** shall be liable to pay such deficiency on demand by the **Commissioner**.

24.8 The **Engineer's** certificate setting forth the fair and reasonable cost of repairing, replacing, rebuilding or restoring any damaged or defective **Work** when performed by one other than the **Contractor**, shall be binding and conclusive upon the **Contractor** as to the amount thereof.

24.9 The **Contractor** shall obtain all manufacturers' warranties and guaranties of all equipment and materials required by this **Contract** in the name of the **City** and shall deliver same to the **Commissioner**. All of the **City's** rights and title and interest in and to said manufacturers' warranties and guaranties may be assigned by the **City** to any subsequent purchasers of such equipment and materials or lessees of the premises into which the equipment and materials have been installed.

CHAPTER VI
CHANGES, EXTRA WORK, AND DOCUMENTATION OF CLAIM

ARTICLE 25. CHANGES

25.1 Changes may be made to this **Contract** only as duly authorized in writing by the **Commissioner** in accordance with the **Law** and this **Contract**. All such changes, modifications, and amendments will become a part of the **Contract**. **Work** so ordered shall be performed by the **Contractor**.

25.2 **Contract** changes will be made only for **Work** necessary to complete the **Work** included in the original scope of the **Contract** and/or for non-material changes to the scope of the **Contract**. Changes are not permitted for any material alteration in the scope of **Work** in the **Contract**.

25.3 The **Contractor** shall be entitled to a price adjustment for **Extra Work** performed pursuant to a written change order. Adjustments to price shall be computed in one or more of the following ways:

25.3.1 By applicable unit prices specified in the **Contract**; and/or

25.3.2 By agreement of a fixed price; and/or

25.3.3 By time and material records; and/or

25.3.4 In any other manner approved by the **CCPO**.

25.4 All payments for change orders are subject to pre-audit by the **Engineering Audit Officer** and may be post-audited by the **Comptroller** and/or the **Agency**.

ARTICLE 26. METHODS OF PAYMENT FOR OVERRUNS AND EXTRA WORK

26.1 Overrun of Unit Price Item: An overrun is any quantity of a unit price item which the **Contractor** is directed to provide which is in excess of one hundred twenty-five (125%) percent of the estimated quantity for that item set forth in the bid schedule.

26.1.1For any unit price item, the **Contractor** will be paid at the unit price bid for any quantity up to one hundred twenty-five (125%) percent of the estimated quantity for that item set forth in the bid schedule. If during the progress of the **Work**, the actual quantity of any unit price item required to complete the **Work** approaches the estimated quantity for that item, and for any reason it appears that the actual quantity of any unit price item necessary to complete the **Work** will exceed the estimated quantity for that item by twenty-five (25%) percent, the **Contractor** shall immediately notify the **Engineer** of such anticipated overrun. The **Contractor** shall not be compensated for any quantity of a unit price item provided which is in excess of one hundred twenty-five (125%) percent of the estimated quantity for that item set forth in the bid schedule without written authorization from the **Engineer**.

26.1.2If the actual quantity of any unit price item necessary to complete the **Work** will exceed one hundred twenty five (125%) percent of the estimated quantity for that item set forth in the bid schedule, the **City** reserves the right and the **Contractor** agrees to negotiate a new unit price for such item. In no event shall such negotiated new unit price exceed the unit bid price. If the **City** and **Contractor** cannot agree on a new unit price, then the **City** shall order the **Contractor** and the **Contractor** agrees to provide additional quantities of the

item on the basis of time and material records for the actual and reasonable cost as determined under Article 26.2, but in no event at a unit price exceeding the unit price bid.

26.2 **Extra Work:** For **Extra Work** where payment is by agreement on a fixed price in accordance with Article 25.3.2, the price to be paid for such **Extra Work** shall be based on the fair and reasonable estimated cost of the items set forth below. For **Extra Work** where payment is based on time and material records in accordance with Article 25.3.3, the price to be paid for such **Extra Work** shall be the actual and reasonable cost of the items set forth below, calculated in accordance with the formula specified therein, if any.

26.2.1 Necessary materials (including transportation to the **Site**); plus

26.2.2 Necessary direct labor, including payroll taxes (subject to statutory wage caps) and supplemental benefits; plus

26.2.3 Sales and personal property taxes, if any, required to be paid on materials not incorporated into such **Extra Work**; plus

26.2.4 Reasonable rental value of **Contractor**-owned (or **Subcontractor**-owned, as applicable), necessary plant and equipment other than **Small Tools**, plus fuel/energy costs. Except for fuel costs for pick-up trucks which shall be reimbursed based on a consumption of five (5) gallons per shift, fuel costs shall be reimbursed based on actual costs or, in the absence of auditable documentation, the following fuel consumption formula per operating hour: (.035) x (HP rating) x (Fuel cost/gallon). Reasonable rental value is defined as the lower of either seventy-five percent of the monthly prorated rental rates established in "The AED Green Book, Rental Rates and Specifications for Construction Equipment" published by Equipment Watch (the "Green Book"), or seventy-five percent of the monthly prorated rental rates established in the "Rental Rate Blue Book for Construction Equipment" published by Equipment Watch (the "Blue Book") (the applicable Blue Book rate being for rental only without the addition of any operational costs listed in the Blue Book). The reasonable rental value is deemed to be inclusive of all operating costs except for fuel/energy consumption and equipment operator's wages/costs. For multiple shift utilization, reimbursement shall be calculated as follows: first shift shall be seventy-five (75%) percent of such rental rates; second shift shall be sixty (60%) percent of the first shift rate; and third shift shall be forty (40%) percent of the first shift rate. Equipment on standby shall be reimbursed at one-third (1/3) the prorated monthly rental rate. **Contractor**-owned (or **Subcontractor**-owned, as applicable) equipment includes equipment from rental companies affiliated with or controlled by the **Contractor** (or **Subcontractor**, as applicable), as determined by the **Commissioner**. In establishing cost reimbursement for non-operating **Contractor**-owned (or **Subcontractor**-owned, as applicable) equipment (scaffolding, sheeting systems, road plates, etc.), the **City** may restrict reimbursement to a purchase-salvage/life cycle basis if less than the computed rental costs; plus

26.2.5 Necessary installation and dismantling of such plant and equipment, including transportation to and from the **Site**, if any, provided that, in the case of non-**Contractor**-owned (or non-**Subcontractor**-owned, as applicable) equipment rented from a third party, the cost of installation and dismantling are not allowable if such costs are included in the rental rate; plus

26.2.6 Necessary fees charged by governmental entities; plus

26.2.7 Necessary construction-related service fees charged by non-governmental entities, such as landfill tipping fees; plus

26.2.8 Reasonable rental costs of non-**Contractor**-owned (or non-**Subcontractor**-owned, as applicable) necessary plant and equipment other than **Small Tools**, plus fuel/energy costs. Except for fuel costs for pick-up trucks which shall be reimbursed based on a consumption of five (5) gallons per shift, fuel costs shall be reimbursed based on actual costs or, in the absence of auditable documentation, the following fuel consumption formula per hour of operation: (.035) x (HP rating) x (Fuel cost/gallon). In lieu of renting, the **City** reserves the right to direct the purchase of non-operating equipment (scaffolding, sheeting systems, road plates, etc.), with payment on a purchase-salvage/life cycle basis, if less than the projected rental costs; plus

26.2.9 Workers' Compensation Insurance, and any insurance coverage expressly required by the **City** for the performance of the **Extra Work** which is different than the types of insurance required by Article 22 and Schedule A of the General Conditions. The cost of Workers' Compensation Insurance is subject to applicable payroll limitation caps and shall be based upon the carrier's Manual Rate for such insurance derived from the applicable class Loss Cost ("LC") and carrier's Lost Cost Multiplier ("LCM") approved by the New York State Department of Financial Services, and with the exception of experience rating, rate modifiers as promulgated by the New York Compensation Insurance Rating Board ("NYCIRB"); plus

26.2.10 Additional costs incurred as a result of the **Extra Work** for performance and payment bonds; plus

26.2.11 Twelve percent (12%) percent of the total of items in Articles 26.2.1 through 26.2.5 as compensation for overhead, except that no percentage for overhead will be allowed on **Payroll Taxes** or on the premium portion of overtime pay or on sales and personal property taxes. Overhead shall include without limitation, all costs and expenses in connection with administration, management superintendence, small tools, and insurance required by Schedule A of the General Conditions other than Workers' Compensation Insurance; plus

26.2.12 Ten (10%) percent of the total of items in Articles 26.2.1 through 26.2.5, plus the items in Article 26.2.11, as compensation for profit, except that no percentage for profit will be allowed on **Payroll Taxes** or on the premium portion of overtime pay or on sales and personal property taxes; plus

26.2.13 Five (5%) percent of the total of items in Articles 26.2.6 through 26.2.10 as compensation for overhead and profit.

26.3 Where the **Extra Work** is performed in whole or in part by other than the **Contractor's** own forces pursuant to Article 26.2, the **Contractor** shall be paid, subject to pre-audit by the **Engineering Audit Officer**, the cost of such **Work** computed in accordance with Article 26.2 above, plus an additional allowance of five (5%) percent to cover the **Contractor's** overhead and profit.

26.4 Where a change is ordered, involving both **Extra Work** and omitted or reduced **Contract Work,** the **Contract** price shall be adjusted, subject to pre-audit by the **EAO**, in an amount based on the difference between the cost of such **Extra Work** and of the omitted or reduced **Work**.

26.5 Where the **Contractor** and the **Commissioner** can agree upon a fixed price for **Extra Work** in accordance with Article 25.3.2 or another method of payment for **Extra Work** in accordance with Article

25.3.4, or for **Extra Work** ordered in connection with omitted **Work**, such method, subject to pre-audit by the **EAO**, may, at the option of the **Commissioner**, be substituted for the cost plus a percentage method provided in Article 26.2; provided, however, that if the **Extra Work** is performed by a **Subcontractor**, the **Contractor** shall not be entitled to receive more than an additional allowance of five (5%) percent for overhead and profit over the cost of such **Subcontractor's Work** as computed in accordance with Article 26.2.

ARTICLE 27. RESOLUTION OF DISPUTES

27.1 All disputes between the **City** and the **Contractor** of the kind delineated in this Article 27.1 that arise under, or by virtue of, this **Contract** shall be finally resolved in accordance with the provisions of this Article 27 and the **PPB** Rules. This procedure for resolving all disputes of the kind delineated herein shall be the exclusive means of resolving any such disputes.

27.1.1 This Article 27 shall not apply to disputes concerning matters dealt with in other sections of the **PPB** Rules, or to disputes involving patents, copyrights, trademarks, or trade secrets (as interpreted by the courts of New York State) relating to proprietary rights in computer software.

27.1.2 This Article 27 shall apply only to disputes about the scope of **Work** delineated by the **Contract**, the interpretation of **Contract** documents, the amount to be paid for **Extra Work** or disputed work performed in connection with the **Contract**, the conformity of the **Contractor's Work** to the **Contract**, and the acceptability and quality of the **Contractor's Work**; such disputes arise when the **Engineer**, **Resident Engineer**, **Engineering Audit Officer**, or other designee of the **Commissioner** makes a determination with which the **Contractor** disagrees.

27.2 All determinations required by this Article 27 shall be made in writing clearly stated, with a reasoned explanation for the determination based on the information and evidence presented to the party making the determination. Failure to make such determination within the time required by this Article 27 shall be deemed a non-determination without prejudice that will allow application to the next level.

27.3 During such time as any dispute is being presented, heard, and considered pursuant to this Article 27, the **Contract** terms shall remain in force and the **Contractor** shall continue to perform **Work** as directed by the **ACCO** or the **Engineer**. Failure of the **Contractor** to continue **Work** as directed shall constitute a waiver by the **Contractor** of its claim.

27.4 Presentation of Disputes to **Commissioner**.

Notice of Dispute and Agency Response. The **Contractor** shall present its dispute in writing ("Notice of Dispute") to the **Commissioner** within thirty (30) Days of receiving written notice of the determination or action that is the subject of the dispute. This notice requirement shall not be read to replace any other notice requirements contained in the **Contract**. The Notice of Dispute shall include all the facts, evidence, documents, or other basis upon which the **Contractor** relies in support of its position, as well as a detailed computation demonstrating how any amount of money claimed by the **Contractor** in the dispute was arrived at. Within thirty (30) Days after receipt of the detailed written submission comprising the complete Notice of Dispute, the **Engineer**, **Resident Engineer**, **Engineering Audit Officer**, or other designee of the **Commissioner** shall submit to the **Commissioner** all materials he or she deems pertinent to the dispute. Following initial submissions to the **Commissioner**, either party may demand of the other the production of any document or other material the demanding party believes may be relevant to the dispute. The requested party shall produce all relevant materials that are not otherwise

protected by a legal privilege recognized by the courts of New York State. Any question of relevancy shall be determined by the **Commissioner** whose decision shall be final. Willful failure of the **Contractor** to produce any requested material whose relevancy the **Contractor** has not disputed, or whose relevancy has been affirmatively determined, shall constitute a waiver by the **Contractor** of its claim.

27.4.1 **Commissioner** Inquiry. The **Commissioner** shall examine the material and may, in his or her discretion, convene an informal conference with the **Contractor**, the **ACCO**, and the **Engineer**, **Resident Engineer**, **Engineering Audit Officer**, or other designee of the **Commissioner** to resolve the issue by mutual consent prior to reaching a determination. The **Commissioner** may seek such technical or other expertise as he or she shall deem appropriate, including the use of neutral mediators, and require any such additional material from either or both parties as he or she deems fit. The **Commissioner's** ability to render, and the effect of, a decision hereunder shall not be impaired by any negotiations in connection with the dispute presented, whether or not the **Commissioner** participated therein. The **Commissioner** may or, at the request of any party to the dispute, shall compel the participation of any **Other Contractor** with a contract related to the **Work** of this **Contract**, and that **Contractor** shall be bound by the decision of the **Commissioner**. Any **Other Contractor** thus brought into the dispute resolution proceeding shall have the same rights and obligations under this Article 27 as the **Contractor** initiating the dispute.

27.4.2 **Commissioner** Determination. Within thirty (30) **Days** after the receipt of all materials and information, or such longer time as may be agreed to by the parties, the **Commissioner** shall make his or her determination and shall deliver or send a copy of such determination to the **Contractor**, the **ACCO,** and **Engineer**, **Resident Engineer**, **Engineering Audit Officer**, or other designee of the **Commissioner**, as applicable, together with a statement concerning how the decision may be appealed.

27.4.3 Finality of **Commissioner's** Decision. The **Commissioner's** decision shall be final and binding on all parties, unless presented to the Contract Dispute Resolution Board pursuant to this Article 27. The **City** may not take a petition to the Contract Dispute Resolution Board. However, should the **Contractor** take such a petition, the **City** may seek, and the Contract Dispute Resolution Board may render, a determination less favorable to the **Contractor** and more favorable to the **City** than the decision of the **Commissioner**.

27.5 Presentation of Dispute to the **Comptroller**. Before any dispute may be brought by the **Contractor** to the Contract Dispute Resolution Board, the **Contractor** must first present its claim to the **Comptroller** for his or her review, investigation, and possible adjustment.

27.5.1 Time, Form, and Content of Notice. Within thirty (30) **Days** of its receipt of a decision by the **Commissioner,** the **Contractor** shall submit to the **Comptroller** and to the **Commissioner** a Notice of Claim regarding its dispute with the **Agency**. The Notice of Claim shall consist of (i) a brief written statement of the substance of the dispute, the amount of money, if any, claimed and the reason(s) the **Contractor** contends the dispute was wrongly decided by the **Commissioner**; (ii) a copy of the written decision of the **Commissioner**; and (iii) a copy of all materials submitted by the **Contractor** to the **Agency**, including the Notice of Dispute. The **Contractor** may not present to the **Comptroller** any material not presented to the **Commissioner**, except at the request of the **Comptroller**.

27.5.2 Response. Within thirty (30) **Days** of receipt of the Notice of Claim, the **Agency** shall make available to the **Comptroller** a copy of all material submitted by the **Agency** to the **Commissioner** in connection with the dispute. The **Agency** may not present to the

Comptroller any material not presented to the **Commissioner** except at the request of the **Comptroller**.

27.5.3 **Comptroller** Investigation. The **Comptroller** may investigate the claim in dispute and, in the course of such investigation, may exercise all powers provided in Sections 7-201 and 7-203 of the Administrative Code. In addition, the **Comptroller** may demand of either party, and such party shall provide, whatever additional material the **Comptroller** deems pertinent to the claim, including original business records of the **Contractor**. Willful failure of the **Contractor** to produce within fifteen (15) **Days** any material requested by the **Comptroller** shall constitute a waiver by the **Contractor** of its claim. The **Comptroller** may also schedule an informal conference to be attended by the **Contractor**, **Agency** representatives, and any other personnel desired by the **Comptroller**.

27.5.4 Opportunity of **Comptroller** to Compromise or Adjust Claim. The **Comptroller** shall have forty-five (45) **Days** from his or her receipt of all materials referred to in Article 27.5.3 to investigate the disputed claim. The period for investigation and compromise may be further extended by agreement between the **Contractor** and the **Comptroller**, to a maximum of ninety (90) **Days** from the **Comptroller's** receipt of all materials. The **Contractor** may not present its petition to the Contract Dispute Resolution Board until the period for investigation and compromise delineated in this Article 27.5.4 has expired. In compromising or adjusting any claim hereunder, the **Comptroller** may not revise or disregard the terms of the **Contract** between the parties.

27.6 Contract Dispute Resolution Board. There shall be a Contract Dispute Resolution Board composed of:

27.6.1 The chief administrative law judge of the Office of Administrative Trials and Hearings (OATH) or his/her designated OATH administrative law judge, who shall act as chairperson, and may adopt operational procedures and issue such orders consistent with this Article 27 as may be necessary in the execution of the Contract Dispute Resolution Board's functions, including, but not limited to, granting extensions of time to present or respond to submissions;

27.6.2 The **CCPO** or his/her designee; any designee shall have the requisite background to consider and resolve the merits of the dispute and shall not have participated personally and substantially in the particular matter that is the subject of the dispute or report to anyone who so participated; and

27.6.3 A person with appropriate expertise who is not an employee of the **City**. This person shall be selected by the presiding administrative law judge from a prequalified panel of individuals, established and administered by OATH with appropriate background to act as decision-makers in a dispute. Such individual may not have a contract or dispute with the **City** or be an officer or employee of any company or organization that does, or regularly represents persons, companies, or organizations having disputes with the **City**.

27.7 Petition to the Contract Dispute Resolution Board. In the event the claim has not been settled or adjusted by the **Comptroller** within the period provided in this Article 27, the **Contractor**, within thirty (30) **Days** thereafter, may petition the Contract Dispute Resolution Board to review the **Commissioner's** determination.

27.7.1 Form and Content of Petition by **Contractor**. The **Contractor** shall present its dispute to the Contract Dispute Resolution Board in the form of a petition, which shall

include (i) a brief written statement of the substance of the dispute, the amount of money, if any, claimed, and the reason(s) the **Contractor** contends the dispute was wrongly decided by the **Commissioner**; (ii) a copy of the written Decision of the **Commissioner,** (iii) copies of all materials submitted by the **Contractor** to the Agency; (iv) a copy of the written decision of the **Comptroller**, if any, and (v) copies of all correspondence with, or written material submitted by the **Contractor**, to the **Comptroller**. The **Contractor** shall concurrently submit four (4) complete sets of the Petition: one set to the **City** Corporation Counsel (Attn: Commercial and Real Estate Litigation Division) and three (3) sets to the Contract Dispute Resolution Board at OATH's offices with proof of service on the **City** Corporation Counsel. In addition, the **Contractor** shall submit a copy of the written statement of the substance of the dispute, cited in (i) above, to both the **Commissioner** and the **Comptroller**.

27.7.2 **Agency** Response. Within thirty (30) **Days** of its receipt of the Petition by the **City** Corporation Counsel, the **Agency** shall respond to the brief written statement of the **Contractor** and make available to the Contract Dispute Resolution Board all material it submitted to the **Commissioner** and **Comptroller**. Three (3) complete copies of the **Agency** response shall be provided to the Contract Dispute Resolution Board and one to the **Contractor**. Extensions of time for submittal of the **Agency** response shall be given as necessary upon a showing of good cause or, upon consent of the parties, for an initial period of up to thirty (30) Days.

27.7.3 Further Proceedings. The Contract Dispute Resolution Board shall permit the **Contractor** to present its case by submission of memoranda, briefs, and oral argument. The Contract Dispute Resolution Board shall also permit the **Agency** to present its case in response to the **Contractor** by submission of memoranda, briefs, and oral argument. If requested by the **City** Corporation Counsel, the **Comptroller** shall provide reasonable assistance in the preparation of the **Agency's** case. Neither the **Contractor** nor the **Agency** may support its case with any documentation or other material that was not considered by the **Comptroller**, unless requested by the Contract Dispute Resolution Board. The Contract Dispute Resolution Board, in its discretion, may seek such technical or other expert advice as it shall deem appropriate and may seek, on its own or upon application of a party, any such additional material from any party as it deems fit. The Contract Dispute Resolution Board, in its discretion, may combine more than one dispute between the parties for concurrent resolution.

27.7.4 Contract Dispute Resolution Board Determination. Within forty-five (45) **Days** of the conclusion of all written submissions and oral arguments, the Contract Dispute Resolution Board shall render a written decision resolving the dispute. In an unusually complex case, the Contract Dispute Resolution Board may render its decision in a longer period, not to exceed ninety (90) **Days**, and shall so advise the parties at the commencement of this period. The Contract Dispute Resolution Board's decision must be consistent with the terms of the **Contract**. Decisions of the Contract Dispute Resolution Board shall only resolve matters before the Contract Dispute Resolution Board and shall not have precedential effect with respect to matters not before the Contract Dispute Resolution Board.

27.7.5 Notification of Contract Dispute Resolution Board Decision. The Contract Dispute Resolution Board shall send a copy of its decision to the **Contractor**, the **ACCO**, the Engineer, the **Comptroller**, the **City** Corporation Counsel, the CCPO, and the **PPB**. A decision in favor of the **Contractor** shall be subject to the prompt payment provisions of the **PPB** Rules. The Required Payment Date shall be thirty (30) Days after the date the parties are formally notified of the Contract Dispute Resolution Board's decision.

27.7.6 Finality of Contract Dispute Resolution Board Decision. The Contract Dispute Resolution
Board's decision shall be final and binding on all parties. Any party may seek review of the Contract Dispute Resolution Board's decision solely in the form of a challenge, filed within four (4) months of the date of the Contract Dispute Resolution Board's decision, in a court of competent jurisdiction of the State of New York, County of New York pursuant to Article 78 of the Civil Practice Law and Rules. Such review by the court shall be limited to the question of whether or not the Contract Dispute Resolution Board's decision was made in violation of lawful procedure, was affected by an error of **Law**, or was arbitrary and capricious or an abuse of discretion. No evidence or information shall be introduced or relied upon in such proceeding that was not presented to the Contract Dispute Resolution Board in accordance with this Article 27.

27.8 Any termination, cancellation, or alleged breach of the **Contract** prior to or during the pendency of any proceedings pursuant to this Article 27 shall not affect or impair the ability of the **Commissioner** or Contract Dispute Resolution Board to make a binding and final decision pursuant to this Article 27.

ARTICLE 28. RECORD KEEPING FOR EXTRA OR DISPUTED WORK OR WORK ON A TIME & MATERIALS BASIS

28.1 While the **Contractor** or any of its **Subcontractors** is performing **Work** on a time and material basis or **Extra Work** on a time and material basis ordered by the **Commissioner** under Article 25, or where the **Contractor** believes that it or any of its **Subcontractors** is performing **Extra Work** but a final determination by **Agency** has not been made, or the **Contractor** or any of its **Subcontractors** is performing disputed **Work** (whether on or off the **Site**), or complying with a determination or order under protest in accordance with Articles 11, 27, and 30, in each such case the **Contractor** shall furnish the **Resident Engineer** daily with three (3) copies of written statements signed by the **Contractor's** representative at the **Site** showing:

28.1.1 The name, trade, and number of each worker employed on such **Work** or engaged in complying with such determination or order, the number of hours employed, and the character of the **Work** each is doing; and

28.1.2 The nature and quantity of any materials, plant and equipment furnished or used in connection with the performance of such **Work** or compliance with such determination or order, and from whom purchased or rented.

28.2 A copy of such statement will be countersigned by the **Resident Engineer**, noting thereon any items not agreed to or questioned, and will be returned to the **Contractor** within two (2) **Days** after submission.

28.3 The **Contractor** and its **Subcontractors**, when required by the **Commissioner**, or the **Comptroller**, shall also produce for inspection, at the office of the **Contractor** or **Subcontractor**, any and all of its books, bid documents, financial statements, vouchers, records, daily job diaries and reports, and cancelled checks, and any other documents relating to showing the nature and quantity of the labor, materials, plant and equipment actually used in the performance of such **Work**, or in complying with such determination or order, and the amounts expended therefor, and shall permit the **Commissioner** and the **Comptroller** to make such extracts therefrom, or copies thereof, as they or either of them may desire.

28.4 In connection with the examination provided for herein, the **Commissioner**, upon demand therefor, will produce for inspection by the **Contractor** such records as the **Agency** may have with

respect to such **Extra Work** or disputed **Work** performed under protest pursuant to order of the **Commissioner**, except those records and reports which may have been prepared for the purpose of determining the accuracy and validity of the **Contractor's** claim.

28.5 Failure to comply strictly with these requirements shall constitute a waiver of any claim for extra compensation or damages on account of the performance of such **Work** or compliance with such determination or order.

ARTICLE 29. OMITTED WORK

29.1 If any **Contract Work** in a lump sum **Contract**, or if any part of a lump sum item in a unit price, lump sum, or percentage-bid **Contract** is omitted by the **Commissioner** pursuant to Article 33, the **Contract** price, subject to audit by the EAO, shall be reduced by a pro rata portion of the lump sum bid amount based upon the percent of **Work** omitted subject to Article 29.4. For the purpose of determining the pro rata portion of the lump sum bid amount, the bid breakdown submitted in accordance with Article 41 shall be considered, but shall not be the determining factor.

29.2 If the whole of a lump sum item or units of any other item is so omitted by the **Commissioner** in a unit price, lump sum, or percentage-bid **Contract**, then no payment will be made therefor except as provided in Article 29.4.

29.3 For units that have been ordered but are only partially completed, the unit price shall be reduced by a pro rata portion of the unit price bid based upon the percentage of **Work** omitted subject to Article 29.4.

29.4 In the event the **Contractor**, with respect to any omitted **Work**, has purchased any non-cancelable material and/or equipment that is not capable of use except in the performance of this **Contract** and has been specifically fabricated for the sole purpose of this **Contract**, but not yet incorporated into the **Work**, the **Contractor** shall be paid for such material and/or equipment in accordance with Article 64.2.1(b); provided, however, such payment is contingent upon the **Contractor's** delivery of such material and/or equipment in acceptable condition to a location designated by the **City**.

29.5 The **Contractor** agrees to make no claim for damages or for loss of overhead and profit with regard to any omitted **Work**.

ARTICLE 30. NOTICE AND DOCUMENTATION OF COSTS AND DAMAGES; PRODUCTION OF FINANCIAL RECORDS

30.1 If the **Contractor** shall claim to be sustaining damages by reason of any act or omission of the **City** or its agents, it shall submit to the **Commissioner** within forty-five (45) **Days** from the time such damages are first incurred, and every thirty (30) **Days** thereafter for as long as such damages are incurred, verified statements of the details and the amounts of such damages, together with documentary evidence of such damages. The **Contractor** may submit any of the above statements within such additional time as may be granted by the **Commissioner** in writing upon written request therefor. Failure of the **Commissioner** to respond in writing to a written request for additional time within thirty (30) **Days** shall be deemed a denial of the request. On failure of the **Contractor** to strictly comply with the foregoing provisions, such claims shall be deemed waived and no right to recover on such claims shall exist. Damages that the **Contractor** may claim in any action or dispute resolution procedure arising under or by reason of this **Contract** shall not be different from or in excess of the statements and documentation made pursuant to this Article 30.

30.2 In addition to the foregoing statements, the **Contractor** shall, upon notice from the **Commissioner**, produce for examination at the **Contractor's** office, by the **Engineer**, **Architect** or **Project Manager**, all of its books of account, bills, invoices, payrolls, subcontracts, time books, daily reports, bank deposit books, bank statements, check books, and cancelled checks, showing all of its acts and transactions in connection with or relating to or arising by reason of this **Contract**, and submit itself and persons in its employment, for examination under oath by any person designated by the **Commissioner** or **Comptroller** to investigate claims made or disputes against the **City** under this **Contract**. At such examination, a duly authorized representative of the **Contractor** may be present.

30.3 In addition to the statements required under Article 28 and this Article 30, the **Contractor** and/or its **Subcontractor** shall, within thirty (30) **Days** upon notice from the **Commissioner** or **Comptroller**, produce for examination at the **Contractor's** and/or **Subcontractor's** office, by a representative of either the **Commissioner** or **Comptroller**, all of its books of account, bid documents, financial statements, accountant workpapers, bills, invoices, payrolls, subcontracts, time books, daily reports, bank deposit books, bank statements, check books, and cancelled checks, showing all of its acts and transactions in connection with or relating to or arising by reason of this **Contract**. Further, the **Contractor** and/or its **Subcontractor** shall submit any person in its employment, for examination under oath by any person designated by the **Commissioner** or **Comptroller** to investigate claims made or disputes against the **City** under this **Contract**. At such examination, a duly authorized representative of the **Contractor** may be present.

30.4 Unless the information and examination required under Article 30.3 is provided by the **Contractor** and/or its **Subcontractor** upon thirty (30) **Days'** notice from the **Commissioner** or **Comptroller**, or upon the **Commissioner's** or **Comptroller's** written authorization to extend the time to comply, the **City** shall be released from all claims arising under, relating to or by reason of this **Contract**, except for sums certified by the **Commissioner** to be due under the provisions of this **Contract**. It is further stipulated and agreed that no person has the power to waive any of the foregoing provisions and that in any action or dispute resolution procedure against the **City** to recover any sum in excess of the sums certified by the **Commissioner** to be due under or by reason of this **Contract**, the **Contractor** must allege in its complaint and prove, at trial or during such dispute resolution procedure, compliance with the provisions of this Article 30.

30.5 In addition, after the commencement of any action or dispute resolution procedure by the **Contractor** arising under or by reason of this **Contract**, the **City** shall have the right to require the **Contractor** to produce for examination under oath, up until the trial of the action or hearing before the Contract Dispute Resolution Board, the books and documents described in Article 30.3 and submit itself and all persons in its employ for examination under oath. If this Article 30 is not complied with as required, then the **Contractor** hereby consents to the dismissal of the action or dispute resolution procedure.

CHAPTER VII
POWERS OF THE RESIDENT ENGINEER, THE ENGINEER OR ARCHITECT AND THE COMMISSIONER

ARTICLE 31. THE RESIDENT ENGINEER

31.1 The **Resident Engineer** shall have the power to inspect, supervise, and control the performance of the **Work**, subject to review by the **Commissioner**. The **Resident Engineer** shall not, however, have the power to issue an **Extra Work** order, except as specifically designated in writing by the **Commissioner**.

ARTICLE 32. THE ENGINEER OR ARCHITECT OR PROJECT MANAGER

32.1 The **Engineer** or **Architect** or **Project Manager**, in addition to those matters elsewhere herein delegated to the **Engineer** and expressly made subject to his/her determination, direction or approval, shall have the power, subject to review by the **Commissioner**:

32.1.1 To determine the amount, quality, and location of the **Work** to be paid for hereunder; and

32.1.2 To determine all questions in relation to the **Work**, to interpret the **Contract Drawings**, **Specifications**, and **Addenda**, and to resolve all patent inconsistencies or ambiguities therein; and

32.1.3 To determine how the **Work** of this **Contract** shall be coordinated with **Work** of **Other Contractors** engaged simultaneously on this **Project**, including the power to suspend any part of the **Work**, but not the whole thereof; and

32.1.4 To make minor changes in the **Work** as he/she deems necessary, provided such changes do not result in a net change in the cost to the **City** or to the **Contractor** of the **Work** to be done under the **Contract**; and

32.1.5 To amplify the **Contract Drawings**, add explanatory information and furnish additional **Specifications** and drawings, consistent with this **Contract**.

32.2 The foregoing enumeration shall not imply any limitation upon the power of the **Engineer** or **Architect** or **Project Manager**, for it is the intent of this **Contract** that all of the **Work** shall generally be subject to his/her determination, direction, and approval, except where the determination, direction or approval of someone other than the **Engineer** or **Architect** or **Project Manager** is expressly called for herein.

32.3 The **Engineer** or **Architect** or **Project Manager** shall not, however, have the power to issue an **Extra Work** order, except as specifically designated in writing by the **Commissioner**.

ARTICLE 33. THE COMMISSIONER

33.1 The **Commissioner**, in addition to those matters elsewhere herein expressly made subject to his/her determination, direction or approval, shall have the power:

33.1.1 To review and make determinations on any and all questions in relation to this **Contract**
and its performance; and

33.1.2 To modify or change this **Contract** so as to require the performance of **Extra Work** (subject, however, to the limitations specified in Article 25) or the omission of **Contract Work**; and

33.1.3 To suspend the whole or any part of the **Work** whenever in his/her judgment such suspension is required:

33.1.3(a) In the interest of the **City** generally; or

33.1.3(b) To coordinate the **Work** of the various contractors engaged on this **Project** pursuant to the provisions of Article 12; or

33.1.3(c) To expedite the completion of the entire **Project** even though the completion of this particular **Contract** may thereby be delayed.

ARTICLE 34. NO ESTOPPEL

34.1 Neither the **City** nor any **Agency**, official, agent or employee thereof, shall be bound, precluded or estopped by any determination, decision, approval, order, letter, payment or certificate made or given under or in connection with this **Contract** by the **City**, the **Commissioner**, the **Engineer**, the **Resident Engineer**, or any other official, agent or employee of the **City**, either before or after the final completion and acceptance of the **Work** and payment therefor:

34.1.1 From showing the true and correct classification, amount, quality or character of the **Work** actually done; or that any such determination, decision, order, letter, payment or certificate was untrue, incorrect or improperly made in any particular, or that the **Work**, or any part thereof, does not in fact conform to the requirements of this **Contract**; and

34.1.2 From demanding and recovering from the **Contractor** any overpayment made to it, or such damages as the **City** may sustain by reason of the **Contractor's** failure to perform each and every part of its **Contract**.

CHAPTER VIII
LABOR PROVISIONS

ARTICLE 35. EMPLOYEES

35.1 The **Contractor** and its **Subcontractors** shall not employ on the **Work**:

35.1.1 Anyone who is not competent, faithful and skilled in the **Work** for which he/she shall be employed; and whenever the **Commissioner** shall inform the **Contractor**, in writing, that any employee is, in his/her opinion, incompetent, unfaithful or disobedient, that employee shall be discharged from the **Work** forthwith, and shall not again be employed upon it; or

35.1.2 Any labor, materials or means whose employment, or utilization during the course of this **Contract**, may tend to or in any way cause or result in strikes, work stoppages, delays, suspension of **Work** or similar troubles by workers employed by the **Contractor** or its **Subcontractors**, or by any of the trades working in or about the buildings and premises where **Work** is being performed under this **Contract**, or by **Other Contractors** or their **Subcontractors** pursuant to other contracts, or on any other building or premises owned or operated by the **City**, its **Agencies**, departments, boards or authorities. Any violation by the **Contractor** of this requirement may, upon certification of the **Commissioner**, be considered as proper and sufficient cause for declaring the **Contractor** to be in default, and for the **City** to take action against it as set forth in Chapter X of this **Contract**, or such other article of this **Contract** as the **Commissioner** may deem proper; or

35.1.3 In accordance with Section 220.3-e of the Labor Law of the State of New York (hereinafter "Labor Law"), the **Contractor** and its **Subcontractors** shall not employ on the **Work** any apprentice, unless he/she is a registered individual, under a bona fide program

registered with the New York State Department of Labor. The allowable ratio of apprentices to journey-level workers in any craft classification shall not be greater than the ratio permitted to the **Contractor** as to its work force on any job under the registered program. Any employee listed on a payroll at an apprentice wage rate, who is not registered as above, shall be paid the wage rate determined by the **Comptroller** of the **City** for the classification of **Work** actually performed. The **Contractor** or **Subcontractor** will be required to furnish written evidence of the registration of its program and apprentices as well as all the appropriate ratios and wage rates, for the area of the construction prior to using any apprentices on the **Contract Work**.

35.2 If the total cost of the **Work** under this **Contract** is at least two hundred fifty thousand ($250,000) dollars, all laborers, workers, and mechanics employed in the performance of the **Contract** on the public work site, either by the **Contractor**, **Subcontractor** or other person doing or contracting to do the whole or a part of the **Work** contemplated by the **Contract**, shall be certified prior to performing any **Work** as having successfully completed a course in construction safety and health approved by the United States Department of Labor's Occupational Safety and Health Administration that is at least ten (10) hours in duration.

35.3 In accordance with Local Law Nos. 30-2012 and 33-2012, codified at sections 6-132 and 12-113 of the Administrative Code, respectively,

35.3.1 The **Contractor** shall not take an adverse personnel action with respect to an officer or employee in retaliation for such officer or employee making a report of information concerning conduct which such officer or employee knows or reasonably believes to involve corruption, criminal activity, conflict of interest, gross mismanagement or abuse of authority by any officer or employee relating to this **Contract** to (a) the Commissioner of the Department of Investigation, (b) a member of the New York City Council, the Public Advocate, or the **Comptroller**, or (c) the **CCPO**, **ACCO**, **Agency** head, or **Commissioner**.

35.3.2 If any of the **Contractor**'s officers or employees believes that he or she has been the subject of an adverse personnel action in violation of Article 35.3.1, he or she shall be entitled to bring a cause of action against the **Contractor** to recover all relief necessary to make him or her whole. Such relief may include but is not limited to: (a) an injunction to restrain continued retaliation, (b) reinstatement to the position such employee would have had but for the retaliation or to an equivalent position, (c) reinstatement of full fringe benefits and seniority rights, (d) payment of two times back pay, plus interest, and (e) compensation for any special damages sustained as a result of the retaliation, including litigation costs and reasonable attorney's fees.

35.3.3 The **Contractor** shall post a notice provided by the **City** in a prominent and accessible place on any site where work pursuant to the **Contract** is performed that contains information about:

35.3.3(a) how its employees can report to the New York City Department of Investigation allegations of fraud, false claims, criminality or corruption arising out of or in connection with the **Contract**; and

35.3.3(b) the rights and remedies afforded to its employees under Administrative Code sections 7-805 (the New York City False Claims Act) and 12-113 (the Whistleblower Protection Expansion Act) for lawful acts taken in connection with the reporting of allegations of fraud, false claims, criminality or corruption in connection with the **Contract**.

35.3.4 For the purposes of this Article 35.3, "adverse personnel action" includes dismissal, demotion, suspension, disciplinary action, negative performance evaluation, any action resulting in loss of staff, office space, equipment or other benefit, failure to appoint, failure to promote, or any transfer or assignment or failure to transfer or assign against the wishes of the affected officer or employee.

35.3.5 This Article 35.3 is applicable to all of the **Contractor**'s **Subcontractors** having subcontracts with a value in excess of $100,000; accordingly, the **Contractor** shall include this rider in all subcontracts with a value a value in excess of $100,000.

35.4 Article 35.3 is not applicable to this **Contract** if it is valued at $100,000 or less. Articles 35.3.1, 35.3.2, 35.3.4, and 35.3.5 are not applicable to this **Contract** if it was solicited pursuant to a finding of an emergency.

ARTICLE 36. NO DISCRIMINATION

36.1 The **Contractor** specifically agrees, as required by Labor Law Section 220-e, as amended, that:

36.1.1 In the hiring of employees for the performance of **Work** under this **Contract** or any subcontract hereunder, neither the **Contractor**, **Subcontractor**, nor any person acting on behalf of such **Contractor** or **Subcontractor**, shall by reason of race, creed, color or national origin discriminate against any citizen of the State of New York who is qualified and available to perform the **Work** to which the employment relates;

36.1.2 Neither the **Contractor**, **Subcontractor**, nor any person on its behalf shall, in any manner, discriminate against or intimidate any employee hired for the performance of **Work** under this **Contract** on account of race, creed, color or national origin;

36.1.3 There may be deducted from the amount payable to the **Contractor** by the **City** under this **Contract** a penalty of fifty ($50.00) dollars for each person for each **Day** during which such person was discriminated against or intimidated in violation of the provisions of this **Contract**; and

36.1.4 This **Contract** may be cancelled or terminated by the **City** and all moneys due or to become due hereunder may be forfeited, for a second or any subsequent violation of the terms or conditions of this Article 36.

36.1.5 This Article 36 covers all construction, alteration and repair of any public building or public work occurring in the State of New York and the manufacture, sale, and distribution of materials, equipment, and supplies to the extent that such operations are performed within the State of New York pursuant to this **Contract**.

36.2 The **Contractor** specifically agrees, as required by Section 6-108 of the Administrative Code, as amended, that:

36.2.1 It shall be unlawful for any person engaged in the construction, alteration or repair of buildings or engaged in the construction or repair of streets or highways pursuant to a **Contract** with the **City** or engaged in the manufacture, sale or distribution of materials, equipment or supplies pursuant to a **Contract** with the **City** to refuse to employ or to refuse to continue in any employment any person on account of the race, color or creed of such person.

36.2.2 It shall be unlawful for any person or any servant, agent or employee of any person, described in Article 36.1.2, to ask, indicate or transmit, orally or in writing, directly or indirectly, the race, color or creed or religious affiliation of any person employed or seeking employment from such person, firm or corporation.

36.2.3 Breach of the foregoing provisions shall be deemed a violation of a material provision of this **Contract**.

36.2.4 Any person, or the employee, manager or owner of or officer of such firm or corporation who shall violate any of the provisions of this Article 36.2 shall, upon conviction thereof, be punished by a fine of not more than one hundred ($100.00) dollars or by imprisonment for not more than thirty (30) **Days**, or both.

36.3 This **Contract** is subject to the requirements of Executive Order No. 50 (1980) ("E.O. 50"), as revised, and the rules and regulations promulgated thereunder. No contract will be awarded unless and until these requirements have been complied with in their entirety. By signing this **Contract**, the **Contractor** agrees that it:

36.3.1 Will not engage in any unlawful discrimination against any employee or applicant for employment because of race, creed, color, national origin, sex, age, disability, marital status or sexual orientation with respect to all employment decisions including, but not limited to, recruitment, hiring, upgrading, demotion, downgrading, transfer, training, rates of pay or other forms of compensation, layoff, termination, and all other terms and conditions of employment; and

36.3.2 Will not engage in any unlawful discrimination in the selection of **Subcontractors** on the basis of the owner's race, color, creed, national origin, sex, age, disability, marital status or sexual orientation; and

36.3.3 Will state in all solicitations or advertisements for employees placed by or on behalf of the **Contractor** that all qualified applicants will receive consideration for employment without unlawful discrimination based on race, creed, color, national origin, sex, age, citizens status, disability, marital status, sexual orientation, or that it is an equal employment opportunity employer; and

36.3.4 Will send to each labor organization or representative of workers with which it has a collective bargaining agreement or other contract or memorandum of understanding, written notification of its equal employment opportunity commitments under E.O. 50 and the rules and regulations promulgated thereunder; and

36.3.5 Will furnish, before the award of the **Contract**, all information and reports, including an employment report, that are required by E.O. 50, the rules and regulations promulgated thereunder, and orders of the **City** Department of Business Services, Division of Labor Services (**DLS**) and will permit access to its books, records, and accounts by the **DLS** for the purposes of investigation to ascertain compliance with such rules, regulations, and orders.

36.4 The **Contractor** understands that in the event of its noncompliance with the nondiscrimination clauses of this **Contract** or with any of such rules, regulations, or orders, such noncompliance shall constitute a material breach of this **Contract** and noncompliance with E.O. 50 and the rules and regulations promulgated thereunder. After a hearing held pursuant to the rules of the **DLS**, the Director of the **DLS** may direct the **Commissioner** to impose any or all of the following sanctions:

36.4.1 Disapproval of the **Contractor**; and/or

36.4.2 Suspension or termination of the **Contract**; and/or

36.4.3 Declaring the **Contractor** in default; and/or

36.4.4 In lieu of any of the foregoing sanctions, the Director of the **DLS** may impose an employment program.

In addition to any actions taken under this **Contract**, failure to comply with E.O. 50 and the rules and regulations promulgated thereunder, in one or more instances, may result in a **City Agency** declaring the **Contractor** to be non-responsible in future procurements. The **Contractor** further agrees that it will refrain from entering into any **Contract** or **Contract** modification subject to E.O. 50 and the rules and regulations promulgated thereunder with a **Subcontractor** who is not in compliance with the requirements of E.O. 50 and the rules and regulations promulgated thereunder.

36.5 The **Contractor** specifically agrees, as required by Section 6-123 of the Administrative Code, that:

36.5.1 The **Contractor** will not engage in any unlawful discriminatory practice in violation of Title 8 of the Administrative Code; and

36.5.2 Any failure to comply with this Article 36.5 may subject the **Contractor** to the remedies set forth in Section 6-123 of the Administrative Code, including, where appropriate, sanctions such as withholding of payment, imposition of an employment program, finding the **Contractor** to be in default, cancellation of the **Contract**, or any other sanction or remedy provided by **Law** or **Contract**.

ARTICLE 37. LABOR LAW REQUIREMENTS

37.1 The **Contractor** shall strictly comply with all applicable provisions of the Labor Law, as amended. Such compliance is a material term of this **Contract**.

37.2 The **Contractor** specifically agrees, as required by Labor Law Sections 220 and 220-d, as amended, that:

37.2.1 Hours of **Work**: No laborer, worker, or mechanic in the employ of the **Contractor**, **Subcontractor** or other person doing or contracting to do the whole or a part of the **Work** contemplated by this **Contract** shall be permitted or required to work more than eight (8) hours in any one (1) **Day**, or more than five (5) **Days** in any one (1) week, except as provided in the Labor Law and in cases of extraordinary emergency including fire, flood, or danger to life or property, or in the case of national emergency when so proclaimed by the President of the United States of America.

37.2.2 In situations in which there are not sufficient laborers, workers, and mechanics who may be employed to carry on expeditiously the **Work** contemplated by this **Contract** as a result of such restrictions upon the number of hours and **Days** of labor, and the immediate commencement or prosecution or completion without undue delay of the **Work** is necessary for the preservation of the **Site** and/or for the protection of the life and limb of the persons using the same, such laborers, workers, and mechanics shall be permitted or required to

work more than eight (8) hours in any one (1) **Day**; or five (5) **Days** in any one (1) week; provided, however, that upon application of any **Contractor**, the **Commissioner** shall have first certified to the Commissioner of Labor of the State of New York (hereinafter "Commissioner of Labor") that such public **Work** is of an important nature and that a delay in carrying it to completion would result in serious disadvantage to the public; and provided, further, that such Commissioner of Labor shall have determined that such an emergency does in fact exist as provided in Labor Law Section 220.2.

37.2.3 Failure of the **Commissioner** to make such a certification to the Commissioner of Labor shall not entitle the **Contractor** to damages for delay or for any cause whatsoever.

37.2.4 Prevailing Rate of Wages: The wages to be paid for a legal day's **Work** to laborers, workers, or mechanics employed upon the **Work** contemplated by this **Contract** or upon any materials to be used thereon shall not be less than the "prevailing rate of wage" as defined in Labor Law Section 220, and as fixed by the **Comptroller** in the attached Schedule of Wage Rates and in updated schedules thereof. The prevailing wage rates and supplemental benefits to be paid are those in effect at the time the **Work** is being performed.

37.2.5 Requests for interpretation or correction in the Information for Bidders includes all requests for clarification of the classification of trades to be employed in the performance of the **Work** under this **Contract**. In the event that a trade not listed in the **Contract** is in fact employed during the performance of this **Contract**, the **Contractor** shall be required to obtain from the **Agency** the prevailing wage rates and supplementary benefits for the trades used and to complete the performance of this **Contract** at the price at which the **Contract** was awarded.

37.2.6 Minimum Wages: Except for employees whose wage is required to be fixed pursuant to Labor Law Section 220, all persons employed by the **Contractor** and any **Subcontractor** in the manufacture or furnishing of the supplies, materials, or equipment, or the furnishing of work, labor, or services, used in the performance of this **Contract**, shall be paid, without subsequent deduction or rebate unless expressly authorized by **Law**, not less than the sum mandated by **Law**.

37.3 Working Conditions: No part of the **Work**, labor or services shall be performed or rendered by the **Contractor** in any plants, factories, buildings or surroundings or under working conditions which are unsanitary or hazardous or dangerous to the health and safety of employees engaged in the performance of this **Contract**. Compliance with the safety, sanitary, and factory inspection **Laws** of the state in which the **Work** is to be performed shall be prima facie evidence of compliance with this Article 37.3.

37.4 Prevailing Wage Enforcement: The **Contractor** agrees to pay for all costs incurred by the **City** in enforcing prevailing wage requirements, including the cost of any investigation conducted by or on behalf of the **Agency** or the **Comptroller,** where the **City** discovers a failure to comply with any of the requirements of this Article 37 by the **Contractor** or its **Subcontractor(s)**. The **Contractor** also agrees that, should it fail or refuse to pay for any such investigation, the **Agency** is hereby authorized to deduct from a **Contractor's** account an amount equal to the cost of such investigation.

37.4.1 The Labor Law Section 220 and Section 220-d, as amended, provide that this **Contract** shall be forfeited and no sum paid for any **Work** done hereunder on a second conviction for willfully paying less than:

37.4.1(a) The stipulated prevailing wage scale as provided in Labor Law section 220, as amended, or

37.4.1(b) The stipulated minimum hourly wage scale as provided in Labor Law section 220-d, as amended.

37.4.2 For any breach or violation of either working conditions (Article 37.3) or minimum wages (Article 37.2.6) provisions, the party responsible therefor shall be liable to the **City** for liquidated damages, which may be withheld from any amounts due on any contracts with the **City** of such party responsible, or may be recovered in actions brought by the **City** Corporation Counsel in the name of the **City**, in addition to damages for any other breach of this **Contract**, for a sum equal to the amount of any underpayment of wages due to any employee engaged in the performance of this **Contract**. In addition, the **Commissioner** shall have the right to cancel contracts and enter into other contracts for the completion of the original contract, with or without public letting, and the original **Contractor** shall be liable for any additional cost. All sums withheld or recovered as deductions, rebates, refunds, or underpayment of wages hereunder, shall be held in a special deposit account and shall be paid without interest, on order of the **Comptroller**, directly to the employees who have been paid less than minimum rates of pay as set forth herein and on whose account such sums were withheld or recovered, provided that no claims by employees for such payments shall be entertained unless made within two (2) years from the date of actual notice to the **Contractor** of the withholding or recovery of such sums by the **City**.

37.4.3 A determination by the **Comptroller** that a **Contractor** and/or its **Subcontractor** willfully violated Labor Law Section 220 will be forwarded to the **City's** five District Attorneys for review.

37.4.4 The **Contractor's** or **Subcontractor's** noncompliance with this Article 37.4 and Labor Law Section 220 may result in an unsatisfactory performance evaluation and the **Comptroller** may also find and determine that the **Contractor** or **Subcontractor** willfully violated the New York Labor **Law**.

37.4.4(a) An unsatisfactory performance evaluation for noncompliance with this Article 37.4 may result in a determination that the **Contractor** is a non-responsible bidder on subsequent procurements with the **City** and thus a rejection of a future award of a contract with the **City**, as well as any other sanctions provided for by **Law**.

37.4.4(b) Labor Law Section 220-b, as amended, provides that when two (2) final determinations have been rendered against a **Contractor** or **Subcontractor** within any consecutive six (6) year period determining that such **Contractor** or **Subcontractor** has willfully failed to pay the prevailing rate of wages or to provide supplements in accordance with the Labor Law and this Article 37.4, whether such failures were concurrent or consecutive and whether or not such final determinations concerning separate public works projects are rendered simultaneously, such **Contractor** or **Subcontractor** shall be ineligible to submit a bid on or be awarded any public works contract with the **City** for a period of five (5) years from the second final determination. If the final determination involves the falsification of payroll records or the kickback of wages or supplements, the **Contractor** or **Subcontractor** shall be ineligible to submit a bid on or be awarded any public works contract with the **City** for a period of five (5) years from the first final determination.

37.4.4(c) Labor Law Section 220, as amended, provides that the **Contractor** or **Subcontractor** found to have violated this Article 37.4 may be directed to make payment of wages or supplements including interest found to be due, and the **Contractor** or **Subcontractor** may be directed to make payment of a further sum as

a civil penalty in an amount not exceeding twenty-five (25%) percent of the total amount found to be due.

37.5 The **Contractor** and its **Subcontractors** shall within ten (10) **Days** after mailing of a Notice of Award or written order, post in prominent and conspicuous places in each and every plant, factory, building, and structure where employees of the **Contractor** and its **Subcontractors** engaged in the performance of this **Contract** are employed, notices furnished by the **City**, in relation to prevailing wages and supplements, minimum wages, and other stipulations contained in Sections 220 and 220-h of the Labor Law, and the **Contractor** and its **Subcontractors** shall continue to keep such notices posted in such prominent and conspicuous places until **Final Acceptance** of the supplies, materials, equipment, or **Work**, labor, or services required to be furnished or rendered under this **Contract**.

37.6 The **Contractor** shall strictly comply with all of the provisions of Articles 37.6.1 through 37.6.5, and provide for all workers, laborers or mechanics in its employ, the following:

37.6.1 Notices Posted At **Site**: Post, in a location designated by the **City**, schedules of prevailing wages and supplements for this **Project**, a copy of all re-determinations of such schedules for the **Project**, the Workers' Compensation **Law** Section 51 notice, all other notices required by **Law** to be posted at the **Site**, the **City** notice that this **Project** is a public works project on which each worker is entitled to receive the prevailing wages and supplements for the occupation at which he or she is working, and all other notices which the **City** directs the **Contractor** to post. The **Contractor** shall provide a surface for such notices which is satisfactory to the **City**. The **Contractor** shall maintain and keep current such notices in a legible manner and shall replace any notice or schedule which is damaged, defaced, illegible or removed for any reason. The **Contractor** shall post such notices before commencing any **Work** on the **Site** and shall maintain such notices until all **Work** on the **Site** is complete; and

37.6.2 Daily **Site** Sign-in Sheets: Maintain daily **Site** sign-in sheets, and require that **Subcontractors** maintain daily **Site** sign-in sheets for its employees, which include blank spaces for an employee's name to be both printed and signed, job title, date started and Social Security number, the time the employee began work and the time the employee left work, until **Final Acceptance** of the supplies, materials, equipment, or **Work**, labor, or services to be furnished or rendered under this **Contract** unless exception is granted by the **Comptroller** upon application by the **Agency**. In the alternative, subject to the approval of the **CCPO**, the **Contractor** and **Subcontractor** may maintain an electronic or biometric sign-in system, which provides the information required by this Article 37.6.2; and

37.6.3 Individual Employee Information Notices: Distribute a notice to each worker, laborer or mechanic employed under this **Contract**, in a form provided by the **Agency**, that this **Project** is a public works project on which each worker, laborer or mechanic is entitled to receive the prevailing rate of wages and supplements for the occupation at which he or she is working. If the total cost of the **Work** under this **Contract** is at least two hundred fifty thousand ($250,000) dollars, such notice shall also include a statement that each worker, laborer or mechanic must be certified prior to performing any **Work** as having successfully completed a course in construction safety and health approved by the United States Department of Labor's Occupational Safety and Health Administration that is at least ten (10) hours in duration. Such notice shall be distributed to each worker before he or she starts performing any **Work** of this **Contract** and with the first paycheck after July first of each year. "Worker, laborer or mechanic" includes employees of the **Contractor** and all **Subcontractors** and all employees of suppliers entering the **Site**. At the time of distribution, the **Contractor** shall have each worker, laborer or mechanic sign a statement, in a form provided by the **Agency**, certifying that the worker has received the notice required by this

Article 37.6.3, which signed statement shall be maintained with the payroll records required by this **Contract**; and

37.6.3(a) The **Contractor** and each **Subcontractor** shall notify each worker, laborer or mechanic employed under this **Contract** in writing of the prevailing rate of wages for their particular job classification. Such notification shall be given to every worker, laborer, and mechanic on their first pay stub and with every pay stub thereafter; and

37.6.4 **Site** Laminated Identification Badges: The **Contractor** shall provide laminated identification badges which include a photograph of the worker's, laborer's or mechanic's face and indicate the worker's, laborer's or mechanic's name, trade, employer's name, and employment starting date (month/day/year). Further, the **Contractor** shall require as a condition of employment on the **Site**, that each and every worker, laborer or mechanic wear the laminated identification badge at all times and that it may be seen by any representative of the **City**. The **Commissioner** may grant a written waiver from the requirement that the laminated identification badge include a photograph if the **Contractor** demonstrates that the identity of an individual wearing a laminated identification badge can be easily verified by another method; and

37.6.5 Language Other Than English Used On **Site**: Provide the **ACCO** notice when three (3) or more employees (worker and/or laborer and/or mechanic) on the **Site**, at any time, speak a language other than English. The **ACCO** will then provide the **Contractor** the notices described in Article 37.6.1 in that language or languages as may be required. The **Contractor** is responsible for all distributions under this Article 37; and

37.6.6 Provision of Records: The **Contractor** and **Subcontractor(s)** shall produce within five (5) **Days** on the **Site** of the **Work** and upon a written order of the **Engineer**, the **Commissioner**, the **ACCO**, the **Agency EAO**, or the **Comptroller,** such records as are required to be kept by this Article 37.6; and

37.6.7 The **Contractor** and **Subcontractor(s)** shall pay employees by check or direct deposit. If this **Contract** is for an amount greater than one million ($1,000,000) dollars, checks issued by the **Contractor** to covered employees shall be generated by a payroll service or automated payroll system (an in-house system may be used if approved by the **Agency**). For any subcontract for an amount greater than seven hundred fifty thousand ($750,000) dollars, checks issued by a **Subcontractor** to covered employees shall be generated by a payroll service or automated payroll system (an in-house system may be used if approved by the **Agency**); and

37.6.8 The failure of the **Contractor** or **Subcontractor(s)** to comply with the provisions of Articles 37.6.1 through 37.6.7 may result in the **Commissioner** declaring the **Contractor** in default and/or the withholding of payments otherwise due under the **Contract**.

37.7 The **Contractor** and its **Subcontractors** shall keep such employment and payroll records as are required by Section 220 of the Labor Law. The failure of the **Contractor** or **Subcontractor(s)** to comply with the provisions of this Article 37.7 may result in the **Commissioner** declaring the **Contractor** in default and/or the withholding of payments otherwise due under the **Contract.**

37.8 At the time the **Contractor** makes application for each partial payment and for final payment, the **Contractor** shall submit to the **Commissioner** a written payroll certification, in the form provided by this **Contract**, of compliance with the prevailing wage, minimum wage, and other provisions and stipulations required by Labor Law Section 220 and of compliance with the training requirements of

Labor Law Section 220-h set forth in Article 35.2. This certification of compliance shall be a condition precedent to payment and no payment shall be made to the **Contractor** unless and until each such certification shall have been submitted to and received by the **Commissioner**.

37.9 This **Contract** is executed by the **Contractor** with the express warranty and representation that the **Contractor** is not disqualified under the provisions of Section 220 of the Labor Law from the award of the **Contract**.

37.10 Any breach or violation of any of the foregoing shall be deemed a breach or violation of a material provision of this **Contract**, and grounds for cancellation thereof by the **City**.

ARTICLE 38. PAYROLL REPORTS

38.1 The **Contractor** and its **Subcontractor(s)** shall maintain on the **Site** during the performance of the **Work** the original payrolls or transcripts thereof which the **Contractor** and its **Subcontractor(s)** are required to maintain and shall submit such original payrolls or transcripts, subscribed and affirmed by it as true, within thirty (30) **Days** after issuance of its first payroll, and every thirty (30) **Days** thereafter, pursuant to Labor Law Section 220(3-a)(a)(iii). The **Contractor** and **Subcontractor(s)** shall submit such original payrolls or transcripts along with each and every payment requisition. If payment requisitions are not submitted at least once a month, the **Contractor** and its **Subcontractor(s)** shall submit original payrolls and transcripts both along with its payment requisitions and independently of its payment requisitions.

38.2 The **Contractor** shall maintain payrolls or transcripts thereof for six (6) years from the date of completion of the **Work** on this **Contract**. If such payrolls and transcripts are maintained outside of New York City after the completion of the **Work** and their production is required pursuant to this Article 38, the **Contractor** shall produce such records in New York City upon request by the City.

38.3 The **Contractor** and **Subcontractor(s)** shall comply with any written order, direction, or request made by the **Engineer**, the **Commissioner**, the **ACCO**, the **Agency EAO**, the **Agency Labor Law Investigator(s)**, or the **Comptroller**, to provide to the requesting party any of the following information and/or records within five (5) **Days** of such written order, direction, or request:

38.3.1 Such original payrolls or transcripts thereof subscribed and affirmed by it as true and the statements signed by each worker pursuant to this Chapter VIII; and/or

38.3.2 Attendance sheets for each **Day** on which any employee of the **Contractor** and/or any of the **Subcontractor(s)** performed **Work** on the **Site**, which attendance sheet shall be in a form acceptable to the **Agency** and shall provide information acceptable to the **Agency** to identify each such employee; and/or

38.3.3 Any other information to satisfy the **Engineer**, the **Commissioner**, the **ACCO**, the **Agency EAO**, the **Agency Labor Law Investigator(s)** or the **Comptroller**, that this Chapter VIII and the Labor Law, as to the hours of employment and prevailing rates of wages and/or supplemental benefits, are being observed.

38.4 The failure of the **Contractor** or **Subcontractor(s)** to comply with the provisions of Articles 38.1 and/or 38.2 may result in the **Commissioner** declaring the **Contractor** in default and/or the withholding of payments otherwise due under the **Contract**.

ARTICLE 39. DUST HAZARDS

39.1 Should a harmful dust hazard be created in performing the **Work** of this **Contract**, for the elimination of which appliances or methods have been approved by the Board of Standards and Appeals of the City of New York, such appliances and methods shall be installed, maintained, and effectively operated during the continuance of such harmful dust hazard. Failure to comply with this provision after notice shall make this **Contract** voidable at the sole discretion of the **City**.

CHAPTER IX
PARTIAL AND FINAL PAYMENTS

ARTICLE 40. CONTRACT PRICE

40.1 The **City** shall pay, and the **Contractor** agrees to accept, in full consideration for the **Contractor's** performance of the **Work** subject to the terms and conditions hereof, the lump sum price or unit prices for which this **Contract** was awarded, plus the amount required to be paid for any **Extra Work** ordered by the **Commissioner** under Article 25, less credit for any **Work** omitted pursuant to Article 29.

ARTICLE 41. BID BREAKDOWN ON LUMP SUM

41.1 Within fifteen (15) **Days** after the commencement date specified in the **Notice to Proceed** or **Order to Work**, unless otherwise directed by the **Resident Engineer**, the **Contractor** shall submit to the **Resident Engineer** a breakdown of its bid price, or of lump sums bid for items of the **Contract**, showing the various operations to be performed under the **Contract**, as directed in the progress schedule required under Article 9, and the value of each of such operations, the total of such items to equal the lump sum price bid. Said breakdown must be approved in writing by the **Resident Engineer**.

41.2 No partial payment will be approved until the **Contractor** submits a bid breakdown that is acceptable to the **Resident Engineer**.

41.3 The **Contractor** shall also submit such other information relating to the bid breakdown as directed by the **Resident Engineer**. Thereafter, the breakdown may be used only for checking the **Contractor's** applications for partial payments hereunder, but shall not be binding upon the **City**, the **Commissioner**, or the **Engineer** for any purpose whatsoever.

ARTICLE 42. PARTIAL PAYMENTS

42.1 From time to time as the **Work** progresses satisfactorily, but not more often than once each calendar month (except where the **Commissioner** approves in writing the submission of invoices on a more frequent basis and for invoices relating to **Work** performed pursuant to a change order), the **Contractor** may submit to the **Engineer** a requisition for a partial payment in the prescribed form, which shall contain an estimate of the quantity and the fair value of the **Work** done during the payment period.

42.2 Partial payments may be made for materials, fixtures, and equipment in advance of their actual incorporation in the **Work**, as the **Commissioner** may approve, and upon the terms and conditions set forth in the General Conditions.

42.3 The **Contractor** shall also submit to the **Commissioner** in connection with every application for partial payment a verified statement in the form prescribed by the **Comptroller** setting forth the information required under Labor Law Section 220-a.

42.4 Within thirty (30) **Days** after receipt of a satisfactory payment application, and within sixty (60) **Days** after receipt of a satisfactory payment application in relation to **Work** performed pursuant to a change order, the **Engineer** will prepare and certify, and the **Commissioner** will approve, a voucher for a partial payment in the amount of such approved estimate, less any and all deductions authorized to be made by the **Commissioner** under the terms of this **Contract** or by **Law**.

ARTICLE 43. PROMPT PAYMENT

43.1 The Prompt Payment provisions of the **PPB** Rules in effect at the time of the bid will be applicable to payments made under this **Contract.** The provisions require the payment to the **Contractor** of interest on payments made after the required payment date, except as set forth in the **PPB** Rules.

43.2 The **Contractor** shall submit a proper invoice to receive payment, except where the **Contract** provides that the **Contractor** will be paid at predetermined intervals without having to submit an invoice for each scheduled payment.

43.3 Determination of interest due will be made in accordance with the **PPB** Rules.

43.4 If the **Contractor** is paid interest, the proportionate share(s) of that interest shall be forwarded by the **Contractor** to its **Subcontractor(s).**

43.5 The **Contractor** shall pay each **Subcontractor** or **Materialman** not later than seven (7) **Days** after receipt of payment out of amounts paid to the **Contractor** by the **City** for **Work** performed by the **Subcontractor** or **Materialman** under this **Contract.**

43.5.1 If **Contractor** fails to make any payment to any **Subcontractor** or **Materialman** within seven (7) **Days** after receipt of payment by the **City** pursuant to this Article 43.5, then the **Contractor** shall pay interest on amounts due to such **Subcontractor** or **Materialman** at the rate of interest in effect on the date such payment is made by the **Contractor** computed in accordance with Section 756-b (1)(b) of the New York General Business Law. Accrual of interest shall commence on the **Day** immediately following the expiration of the seventh **Day** following receipt of payment by the **Contractor** from the **City** and shall end on the date on which payment is made.

43.6 The **Contractor** shall include in each of its subcontracts a provision requiring each **Subcontractor** to make payment to each of its **Subcontractors** or **Materialmen** for **Work** performed under this **Contract** in the same manner and within the same time period set forth above.

ARTICLE 44. SUBSTANTIAL COMPLETION PAYMENT

44.1 The **Contractor** shall submit with the **Substantial Completion** requisition:

44.1.1 A final verified statement of any pending Article 27 disputes in accordance with the **PPB** Rules and this **Contract** and any and all alleged claims against the **City**, in any way connected with or arising out of this **Contract** (including those as to which details may have been furnished pursuant to Articles 11, 27, 28, and 30) setting forth with respect to each

such claim the total amount thereof, the various items of labor and materials included therein, and the alleged value of each item; and if the alleged claim be one for delay, the alleged cause of each such delay, the period or periods of time, giving the dates when the **Contractor** claims the performance of the **Work** or a particular part thereof was delayed, and an itemized statement and breakdown of the amount claimed for each such delay.

44.1.1(a) With respect to each such claim, the **Commissioner**, the **Comptroller** and, in the event of litigation, the **City** Corporation Counsel shall have the same right to inspect, and to make extracts or copies of, the **Contractor's** books, vouchers, records, etc., as is referred to in Articles 11, 27, 28, and 30. Nothing contained in this Article 44.1.1(a) is intended to or shall relieve the **Contractor** from the obligation of complying strictly with Articles 11, 27, 28, and 30. The **Contractor** is warned that unless such claims are completely set forth as herein required, the **Contractor** upon acceptance of the **Substantial Completion** payment pursuant to this Article 44, will have waived any such claims.

44.1.2 A **Final Approved Punch List**.

44.1.3 Where required, a request for an extension of time to achieve **Substantial Completion** or final extension of time.

44.2 The **Commissioner** shall issue a voucher calling for payment of any part or all of the balance due for **Work** performed under the **Contract**, including monies retained under Article 21, less any and all deductions authorized to be made by the **Commissioner**, under this **Contract** or by **Law**, and less twice the amount the **Commissioner** considers necessary to ensure the completion of the balance of the **Work** by the **Contractor**. Such a payment shall be considered a partial and not a final payment. No **Substantial Completion** payment shall be made under this Article 44 where the **Contractor** failed to complete the **Work** within the time fixed for such completion in the Schedule A of the General Conditions, or within the time to which completion may have been extended, until an extension or extensions of time for the completion of **Work** have been acted upon pursuant to Article 13.

44.3 No further partial payments shall be made to the **Contractor** after **Substantial Completion**, except the **Substantial Completion** payment and payment pursuant to any **Contractor's** requisition that were properly filed with the **Commissioner** prior to the date of **Substantial Completion**; however, the **Commissioner** may grant a waiver for further partial payments after the date of **Substantial Completion** to permit payments for change order **Work** and/or release of retainage and deposits pursuant to Articles 21 and 24. Such waiver shall be in writing.

44.4 The **Contractor** acknowledges that nothing contained in this Article 44 is intended to or shall in any way diminish the force and effect of Article 13.

ARTICLE 45. FINAL PAYMENT

45.1 After completion and **Final Acceptance** of the **Work**, the **Contractor** shall submit all required certificates and documents, together with a requisition for the balance claimed to be due under the **Contract**, less the amount authorized to be retained for maintenance under Article 24. Such submission shall be within 90 days of the date of the **Commissioner's** written determination of **Final Acceptance**, or within such additional time as may be granted by the **Commissioner** in writing. If the **Contractor** fails to submit all required certificates and documents within the time allowed, no payment of the balance claimed shall be made to the **Contractor** and the **Contractor** shall be deemed to have forfeited its right to

payment of any balance claimed. A verified statement similar to that required in connection with applications for partial payments shall also be submitted to the **Commissioner**.

45.2 Amended Verified Statement of Claims: The **Contractor** shall also submit with the final requisition any amendments to the final verified statement of any pending dispute resolution procedures in accordance with the **PPB** Rules and this **Contract** and any and all alleged claims against the **City**, in any way connected with or arising out of this **Contract** (including those as to which details may have been furnished pursuant to Articles 11, 27, 28, and 30) that have occurred subsequent to **Substantial Completion**, setting forth with respect to each such claim the total amount thereof, the various items of labor and materials included therein, and the alleged value of each such item; and if the alleged claim be one for delay, the alleged cause of each such delay, the period or periods of time, giving the dates when the **Contractor** claims the performance of the **Work** or a particular part thereof was delayed, and an itemized statement and breakdown of the amount claimed for each such delay. With reference to each such claim, the **Commissioner**, the **Comptroller** and, in the event of litigation, the **City** Corporation Counsel shall have the same right to inspect, and to make extracts or copies of, the **Contractor's** books, vouchers, records, etc., as is referred to in Articles 11, 27, 28, and 30. Nothing contained in this Article 45.2, is intended to or shall relieve the **Contractor** from the obligation of complying strictly with Articles 11, 27, 28, and 30. The **Contractor** is warned that unless such claims are completely set forth as herein required, the **Contractor**, upon acceptance of the Final Payment pursuant to Article 46, will have waived any such claims.

45.3 Preparation of Final Voucher: Upon determining the balance due hereunder other than on account of claims, the **Engineer** will prepare and certify, for the Commissioner's approval, a voucher for final payment in that amount less any and all deductions authorized to be made by the **Commissioner** under this **Contract** or by **Law**. In the case of a lump sum **Contract**, the **Commissioner** shall certify the voucher for final payment within thirty (30) **Days** from the date of completion and acceptance of the **Work**, provided all requests for extensions of time have been acted upon.

45.3.1 All prior certificates and vouchers upon which partial payments were made, being merely estimates made to enable the **Contractor** to prosecute the **Work** more advantageously, shall be subject to correction in the final voucher, and the certification of the **Engineer** thereon and the approval of the **Commissioner** thereof, shall be conditions precedent to the right of the **Contractor** to receive any money hereunder. Such final voucher shall be binding and conclusive upon the **Contractor**.

45.3.2 Payment pursuant to such final voucher, less any deductions authorized to be made by the **Commissioner** under this **Contract** or by **Law**, shall constitute the final payment, and shall be made by the **Comptroller** within thirty (30) **Days** after the filing of such voucher in his/her office.

45.4 The **Contractor** acknowledges that nothing contained in this Article 45 is intended to or shall in any way diminish the force and effect of Article 13.

ARTICLE 46. ACCEPTANCE OF FINAL PAYMENT

46.1 The acceptance by the **Contractor**, or by anyone claiming by or through it, of the final payment, whether such payment be made pursuant to any judgment of any court, or otherwise, shall constitute and operate as a release of the **City** from any and all claims of and liability to the **Contractor** for anything heretofore done or furnished for the **Contractor** relating to or arising out of this **Contract** and the **Work** done hereunder, and for any prior act, neglect or default on the part of the **City** or any of its officials, agents or employees, excepting only a claim against the **City** for the amounts deducted or retained in accordance with the terms and provisions of this **Contract** or by **Law**, and excepting any

claims, not otherwise waived, or any pending dispute resolution procedures which are contained in the verified statement filed with the **Contractor's** substantial and final requisitions pursuant to Articles 44 and 45.

46.2 The **Contractor** is warned that the execution by it of a release, in connection with the acceptance of the final payment, containing language purporting to reserve claims other than those herein specifically excepted from the operation of this Article 46, or those for amounts deducted by the **Commissioner** from the final requisition or from the final payment as certified by the **Engineer** and approved by the **Commissioner**, shall not be effective to reserve such claims, anything stated to the **Contractor** orally or in writing by any official, agent or employee of the **City** to the contrary notwithstanding.

46.3 Should the **Contractor** refuse to accept the final payment as tendered by the **Comptroller**, it shall constitute a waiver of any right to interest thereon.

46.4 The **Contractor**, however, shall not be barred by this Article 46 from commencing an action for breach of **Contract** to the extent permitted by **Law** and by the terms of the **Contract** for any claims that are contained in the verified statement filed with the **Contractor's** substantial and final requisitions pursuant to Articles 44 and 45 or that arose after submission of the final payment requisition, provided that a detailed and verified statement of claim is served upon the contracting **Agency** and **Comptroller** not later than forty (40) **Days** after the making of such final payment by electronic funds transfer (EFT) or the mailing of such final payment. The statement shall specify the items upon which the claim will be based and any such claim shall be limited to such items.

ARTICLE 47. APPROVAL BY PUBLIC DESIGN COMMISSION

47.1 All works of art, including paintings, mural decorations, stained glass, statues, bas-reliefs, and other sculptures, monuments, fountains, arches, and other structures of a permanent character intended for ornament or commemoration, and every design of the same to be used in the performance of this **Contract**, and the design of all bridges, approaches, buildings, gates, fences, lamps, or structures to be erected, pursuant to the terms of this **Contract**, shall be submitted to the Art Commission, d/b/a the Public Design Commission of the City of New York, and shall be approved by the Public Design Commission prior to the erection or placing in position of the same. The final payment shall not become due or payable under this **Contract** unless and until the Public Design Commission shall certify that the design for the **Work** herein contracted for has been approved by the said Public Design Commission, and that the same has been executed in substantial accordance with the design so approved, pursuant to the provisions of Chapter 37, Section 854 of the **City** Charter, as amended.

CHAPTER X
CONTRACTOR'S DEFAULT

ARTICLE 48. COMMISSIONER'S RIGHT TO DECLARE CONTRACTOR IN DEFAULT

48.1 In addition to those instances specifically referred to in other Articles herein, the **Commissioner** shall have the right to declare the **Contractor** in default of this **Contract** if:

48.1.1 The **Contractor** fails to commence **Work** when notified to do so by the **Commissioner**; or
if

48.1.2 The **Contractor** shall abandon the **Work**; or if

48.1.3 The **Contractor** shall refuse to proceed with the **Work** when and as directed by the **Commissioner**; or if

48.1.4 The **Contractor** shall, without just cause, reduce its working force to a number which, if maintained, would be insufficient, in the opinion of the **Commissioner**, to complete the **Work** in accordance with the progress schedule; or if

48.1.5 The **Contractor** shall fail or refuse to increase sufficiently such working force when ordered to do so by the **Commissioner**; or if

48.1.6 The **Contractor** shall sublet, assign, transfer, convert or otherwise dispose of this **Contract** other than as herein specified; or sell or assign a majority interest in the **Contractor**; or if

48.1.7 The **Contractor** fails to secure and maintain all required insurance; or if

48.1.8 A receiver or receivers are appointed to take charge of the **Contractor's** property or affairs; or if

48.1.9 The **Commissioner** shall be of the opinion that the **Contractor** is or has been unnecessarily or unreasonably or willfully delaying the performance and completion of the **Work**, or the award of necessary subcontracts, or the placing of necessary material and equipment orders; or if

48.1.10 The **Commissioner** shall be of the opinion that the **Contractor** is or has been willfully or in bad faith violating any of the provisions of this **Contract**; or if

48.1.11 The **Commissioner** shall be of the opinion that the **Work** cannot be completed within the time herein provided therefor or within the time to which such completion may have been extended; provided, however, that the impossibility of timely completion is, in the **Commissioner's** opinion, attributable to conditions within the **Contractor's** control; or if

48.1.12 The **Work** is not completed within the time herein provided therefor or within the time to which the **Contractor** may be entitled to have such completion extended; or if

48.1.13 Any statement or representation of the **Contractor** in the **Contract** or in any document submitted by the **Contractor** with respect to the **Work**, the **Project**, or the **Contract** (or for purposes of securing the **Contract**) was untrue or incorrect when made; or if

48.1.14 The **Contractor** or any of its officers, directors, partners, five (5%) percent shareholders, principals, or other persons substantially involved in its activities, commits any of the acts or omissions specified as the grounds for debarment in the **PPB** Rules.

48.2 Before the **Commissioner** shall exercise his/her right to declare the **Contractor** in default, the **Commissioner** shall give the **Contractor** an opportunity to be heard, upon not less than two (2) **Days** notice.

ARTICLE 49. EXERCISE OF THE RIGHT TO DECLARE DEFAULT

49.1 The right to declare the **Contractor** in default for any of the grounds specified or referred to in Article 48 shall be exercised by sending the **Contractor** a notice, signed by the **Commissioner**, setting forth the ground or grounds upon which such default is declared (hereinafter referred to as a "Notice of Default").

49.2 The **Commissioner's** determination that the **Contractor** is in default shall be conclusive, final, and binding on the parties and such a finding shall preclude the **Contractor** from commencing a plenary action for any damages relating to the **Contract**. If the **Contractor** protests the determination of the **Commissioner**, the **Contractor** may commence an action in a court of competent jurisdiction of the State of New York under Article 78 of the New York Civil Practice Law and Rules.

ARTICLE 50. QUITTING THE SITE

50.1 Upon receipt of such notice the **Contractor** shall immediately discontinue all further operations under this **Contract** and shall immediately quit the **Site**, leaving untouched all plant, materials, equipment, tools, and supplies then on the **Site**.

ARTICLE 51. COMPLETION OF THE WORK

51.1 The **Commissioner**, after declaring the **Contractor** in default, may then have the **Work** completed by such means and in such manner, by contract with or without public letting, or otherwise, as he/she may deem advisable, utilizing for such purpose such of the **Contractor's** plant, materials, equipment, tools, and supplies remaining on the **Site**, and also such **Subcontractors**, as he/she may deem advisable.

51.2 After such completion, the **Commissioner** shall make a certificate stating the expense incurred in such completion, which shall include the cost of re-letting and also the total amount of liquidated damages (at the rate provided for in the **Contract**) from the date when the **Work** should have been completed by the **Contractor** in accordance with the terms hereof to the date of actual completion of the **Work**. Such certificate shall be binding and conclusive upon the **Contractor**, its sureties, and any person claiming under the **Contractor**, as to the amount thereof.

51.3 The expense of such completion, including any and all related and incidental costs, as so certified by the **Commissioner**, and any liquidated damages assessed against the **Contractor**, shall be charged against and deducted out of monies which are earned by the **Contractor** prior to the date of default. Should the expense of such completion, as certified by the **Commissioner**, exceed the total sum which would have been payable under the **Contract** if it had been completed by the **Contractor**, any excess shall be paid by the **Contractor**.

ARTICLE 52. PARTIAL DEFAULT

52.1 In case the **Commissioner** shall declare the **Contractor** in default as to a part of the **Work** only, the **Contractor** shall discontinue such part, shall continue performing the remainder of the **Work** in strict conformity with the terms of this **Contract**, and shall in no way hinder or interfere with any **Other**

Contractor(s) or persons whom the **Commissioner** may engage to complete the **Work** as to which the **Contractor** was declared in default.

52.2 The provisions of this Chapter relating to declaring the **Contractor** in default as to the entire **Work** shall be equally applicable to a declaration of partial default, except that the **Commissioner** shall be entitled to utilize for completion of the part of the **Work** as to which the **Contractor** was declared in default only such plant, materials, equipment, tools, and supplies as had been previously used by the **Contractor** on such part.

ARTICLE 53. PERFORMANCE OF UNCOMPLETED WORK

53.1 In completing the whole or any part of the **Work** under the provisions of this Chapter X, the **Commissioner** shall have the power to depart from or change or vary the terms and provisions of this **Contract**, provided, however, that such departure, change or variation is made for the purpose of reducing the time or expense of such completion. Such departure, change or variation, even to the extent of accepting a lesser or different performance, shall not affect the conclusiveness of the **Commissioner's** certificate of the cost of completion referred to in Article 51, nor shall it constitute a defense to an action to recover the amount by which such certificate exceeds the amount which would have been payable to the **Contractor** hereunder but for its default.

ARTICLE 54. OTHER REMEDIES

54.1 In addition to the right to declare the **Contractor** in default pursuant to this Chapter X, the **Commissioner** shall have the absolute right, in his/her sole discretion and without a hearing, to complete or cause to be completed in the same manner as described in Articles 51 and 53, any or all unsatisfactory or uncompleted punch list **Work** that remains after the completion date specified in the **Final Approved Punch List**. A written notice of the exercise of this right shall be sent to the **Contractor** who shall immediately quit the **Site** in accordance with the provisions of Article 50.

54.2 The expense of completion permitted under Article 54.1, including any and all related and incidental costs, as so certified by the **Commissioner**, shall be charged against and deducted out of monies which have been earned by the **Contractor** prior to the date of the exercise of the right set forth in Article 54.1; the balance of such monies, if any, subject to the other provisions of this **Contract**, to be paid to the **Contractor** without interest after such completion. Should the expense of such completion, as certified by the **Commissioner**, exceed the total sum which would have been payable under the **Contract** if it had been completed by the **Contractor**, any excess shall be paid by the **Contractor**.

54.3 The previous provisions of this Chapter X shall be in addition to any and all other remedies available under **Law** or in equity.

54.4 The exercise by the **City** of any remedy set forth herein shall not be deemed a waiver by the **City** of any other legal or equitable remedy contained in this **Contract** or provided under **Law**.

CHAPTER XI
MISCELLANEOUS PROVISIONS

ARTICLE 55. CONTRACTOR'S WARRANTIES

55.1 In consideration of, and to induce, the award of this **Contract** to the **Contractor**, the **Contractor** represents and warrants:

55.1.1 That it is financially solvent, sufficiently experienced and competent to perform the **Work**; and

55.1.2 That the facts stated in its bid and the information given by it pursuant to the Information for Bidders is true and correct in all respects; and

55.1.3 That it has read and complied with all requirements set forth in the **Contract**.

ARTICLE 56. CLAIMS AND ACTIONS THEREON

56.1 Any claim, that is not subject to dispute resolution under the **PPB** Rules or this **Contract**, against the **City** for damages for breach of **Contract** shall not be made or asserted in any action, unless the **Contractor** shall have strictly complied with all requirements relating to the giving of notice and of information with respect to such claims, as herein before provided.

56.2 Nor shall any action be instituted or maintained on any such claims unless such action is commenced within six (6) months after **Substantial Completion**; except that:

56.2.1 Any claims arising out of events occurring after **Substantial Completion** and before **Final Acceptance** of the **Work** shall be asserted within six (6) months of **Final Acceptance** of the **Work**;

56.2.2 Any claims for monies deducted, retained or withheld under the provisions of this **Contract** shall be asserted within six (6) months after the date when such monies otherwise become due and payable hereunder; and

56.2.3 If the **Commissioner** exercises his/her right to terminate the **Contract** pursuant to Article 64, any such action shall be commenced within six (6) months of the date the **Commissioner** exercises said right.

ARTICLE 57. INFRINGEMENT

57.1 The **Contractor** shall be solely responsible for and shall defend, indemnify, and hold the **City** harmless from any and all claims (even if the allegations of the lawsuit are without merit) and judgments for damages and from costs and expenses to which the **City** may be subject to or which it may suffer or incur allegedly arising out of or in connection with any infringement by the **Contractor** of any copyright, trade secrets, trademark or patent rights or any other property or personal right of any third party by the **Contractor** and/or its **Subcontractors** in the performance or completion of the **Work**. Insofar as the facts or **Law** relating to any claim would preclude the **City** from being completely indemnified by the **Contractor**, the **City** shall be partially indemnified by the **Contractor** to the fullest extent permitted by **Law**.

ARTICLE 58. NO CLAIM AGAINST OFFICIALS, AGENTS OR EMPLOYEES

58.1 No claim whatsoever shall be made by the **Contractor** against any official, agent or employee of the **City** for, or on account of, anything done or omitted to be done in connection with this **Contract**.

ARTICLE 59. SERVICE OF NOTICES

59.1 The **Contractor** hereby designates the business address, fax number, and email address specified in its bid, as the place where all notices, directions or other communications to the **Contractor** may be delivered, or to which they may be mailed. Any notice, direction, or communication from either party to the other shall be in writing and shall be deemed to have been given when (i) delivered personally; (ii) sent by certified mail, return receipt requested; (iii) delivered by overnight or same day courier service in a properly addressed envelope with confirmation; or (iv) sent by fax or email and, unless receipt of the fax or e-mail is acknowledged by the recipient by fax or e-mail, deposited in a post office box regularly maintained by the United States Postal Service in a properly addressed, postage pre-paid envelope.

59.2 **Contractor's** notice address, email address, or fax number may be changed at any time by an instrument in writing, executed and acknowledged by the **Contractor**, and delivered to the **Commissioner**.

59.3 Nothing herein contained shall, however, be deemed to preclude or render inoperative the service of any notice, direction or other communication upon the **Contractor** personally, or, if the **Contractor** is a corporation, upon any officer thereof.

ARTICLE 60. UNLAWFUL PROVISIONS DEEMED STRICKEN FROM CONTRACT

60.1 If this **Contract** contains any unlawful provision not an essential part of the **Contract** and which shall not appear to have been a controlling or material inducement to the making thereof, the same shall be deemed of no effect and shall, upon notice by either party, be deemed stricken from the **Contract** without affecting the binding force of the remainder.

ARTICLE 61. ALL LEGAL PROVISIONS DEEMED INCLUDED

61.1 It is the intent and understanding of the parties to this **Contract** that each and every provision of **Law** required to be inserted in this **Contract** shall be and is inserted herein. Furthermore, it is hereby stipulated that every such provision is to be deemed to be inserted herein, and if, through mistake or otherwise, any such provision is not inserted, or is not inserted in correct form, then this **Contract** shall forthwith upon the application of either party be amended by such insertion so as to comply strictly with the **Law** and without prejudice to the rights of either party hereunder.

ARTICLE 62. TAX EXEMPTION

62.1 The **City** is exempt from payment of Federal, State, and local taxes, including sales and compensating use taxes of the State of New York and its cities and counties on all tangible personal property sold to the **City** pursuant to the provisions of this **Contract**. These taxes are not to be included in bids. However, this exemption does not apply to tools, machinery, equipment or other property leased by or to the **Contractor**, **Subcontractor** or **Materialman** or to tangible personal property which, even

though it is consumed, is not incorporated into the completed **Work** (consumable supplies) and tangible personal property that the **Contractor** is required to remove from the **Site** during or upon completion of the **Work**. The **Contractor** and its **Subcontractors** and **Materialmen** shall be responsible for and pay any and all applicable taxes, including sales and compensating use taxes, on such leased tools, machinery, equipment or other property and upon all such consumable supplies and tangible personal property that the **Contractor** is required to remove from the **Site** during or upon completion of the **Work**.

62.2 The **Contractor** agrees to sell and the **City** agrees to purchase all tangible personal property, other than consumable supplies and other tangible personal property that the **Contractor** is required to remove from the **Site** during or upon completion of the **Work**, that is required, necessary or proper for or incidental to the construction of the **Project** covered by this **Contract**. The sum paid under this **Contract** for such tangible personal property shall be in full payment and consideration for the sale of such tangible personal property.

62.2.1 The **Contractor** agrees to construct the **Project** and to perform all **Work**, labor and services rendered, necessary, proper or incidental thereto for the sum shown in the bid for the performance of such **Work**, labor, and services, and the sum so paid pursuant to this **Contract** for such **Work**, labor, and services, shall be in full consideration for the performance by the **Contractor** of all its duties and obligations under this **Contract** in connection with said **Work,** labor, and services.

62.3 20 NYCRR Section 541.3(d) provides that a **Contractor**'s purchases of tangible personal property that is either incorporated into real property owned by a governmental entity or purchased for and sold to a governmental entity are exempt from sales and use tax. The **City** shall not pay sales tax for any such tangible personal property that it purchases from the **Contractor** pursuant to the **Contract.** With respect to such tangible personal property, the **Contractor**, at the request of the **City**, shall furnish to the **City** such bills of sale and other instruments as may be required by the **City**, properly executed, acknowledged and delivered assuring to the **City** title to such tangible personal property, free of liens and/or encumbrances, and the **Contractor** shall mark or otherwise identify all such tangible personal property as the property of the **City**.

62.4 Title to all tangible personal property to be sold by the **Contractor** to the **City** pursuant to the provisions of the **Contract** shall immediately vest in and become the sole property of the **City** upon delivery of such tangible personal property to the **Site**. Notwithstanding such transfer of title, the **Contractor** shall have the full and continuing responsibility to install such tangible personal property in accordance with the provisions of this **Contract**, protect it, maintain it in a proper condition and forthwith repair, replace and make good any damage thereto, theft or disappearance thereof, and furnish additional tangible personal property in place of any that may be lost, stolen or rendered unusable, without cost to the **City**, until such time as the **Work** covered by the **Contract** is fully accepted by the **City**. Such transfer of title shall in no way affect any of the **Contractor's** obligations hereunder. In the event that, after title has passed to the **City**, any of the tangible personal property is rejected as being defective or otherwise unsatisfactory, title to all such tangible personal property shall be deemed to have been transferred back to the **Contractor**.

62.5 The purchase by **Subcontractors** or **Materialmen** of tangible personal property to be sold hereunder shall be a purchase or procurement for resale to the **Contractor** (either directly or through other **Subcontractors**) and therefore not subject to the aforesaid sales and compensating use taxes, provided that the subcontracts and purchase agreements provide for the resale of such tangible personal property and that such subcontracts and purchase agreements are in a form similar to this **Contract** with respect to the separation of the sale of consumable supplies and tangible personal property that the **Contractor** is required to remove from the **Site** during or upon completion of the **Work** from the **Work** and labor, services, and any other matters to be provided, and provided further that the subcontracts and

purchase agreements provide separate prices for tangible personal property and all other services and matters. Such separation shall actually be followed in practice, including the separation of payments for tangible personal property from the payments for other **Work** and labor and other things to be provided.

62.6 The **Contractor** and its **Subcontractors** and **Materialmen** shall furnish a **Contractor** Exempt Purchase Certificate to all persons, firms or corporations from which they purchase tangible personal property for the performance of the **Work** covered by this **Contract**.

62.7 In the event any of the provisions of this Article 62 shall be deemed to be in conflict with any other provisions of this **Contract** or create any ambiguity, then the provisions of this Article 62 shall control.

ARTICLE 63. INVESTIGATION(S) CLAUSE

63.1 The parties to this **Contract** agree to cooperate fully and faithfully with any investigation, audit or inquiry conducted by a United States, a State of New York (State) or a **City** governmental agency or authority that is empowered directly or by designation to compel the attendance of witnesses and to examine witnesses under oath, or conducted by the Inspector General of a governmental agency that is a party in interest to the transaction, submitted bid, submitted proposal, contract, lease, permit or license that is the subject of the investigation, audit or inquiry.

63.2 If any person who has been advised that his/her statement, and any information from such statement, will not be used against him/her in any subsequent criminal proceeding refuses to testify before a grand jury or other governmental agency or authority empowered directly or by designation to compel the attendance of witnesses and to examine witnesses under oath concerning the award of or performance under any transaction, agreement, lease, permit, contract, or license entered into with the **City**, the State, or any political subdivision or public authority thereof, or the Port Authority of New York and New Jersey, or any local development corporation within the **City**, or any public benefit corporation organized under the **Laws** of the State of New York, or;

63.3 If any person refuses to testify for a reason other than the assertion of his/her privilege against self incrimination in an investigation, audit or inquiry conducted by a **City** or State governmental agency or authority empowered directly or by designation to compel the attendance of witnesses and to take testimony under oath, or by the Inspector General of the governmental agency that is a party in interest in, and is seeking testimony concerning the award of, or performance under any transaction, agreement, lease, permit, contract, or license entered into with the **City**, the State, or any political subdivision thereof or any local development corporation within the **City**, then;

63.4 The **Commissioner** whose **Agency** is a party in interest to the transaction, submitted bid, submitted proposal, contract, lease, permit, or license shall convene a hearing, upon not less than five (5) **Days**' written notice to the parties involved to determine if any penalties should attach for the failure of a person to testify.

63.5 If any non-governmental party to the hearing requests an adjournment, the **Commissioner** who convened the hearing may, upon granting the adjournment, suspend any contract, lease, permit, or license, pending the final determination pursuant to Article 63.7 without the **City** incurring any penalty or damages for delay or otherwise.

63.6 The penalties which may attach after a final determination by the **Commissioner** may include but shall not exceed:

63.6.1 The disqualification for a period not to exceed five (5) years from the date of an adverse determination for any person, or any entity of which such person was a member at the time the testimony was sought, from submitting bids for, or transacting business with, or entering into or obtaining any contract, lease, permit or license with or from the **City**; and/or

63.6.2 The cancellation or termination of any and all such existing **City** contracts, leases, permits or licenses that the refusal to testify concerns and that have not been assigned as permitted under this **Contract**, nor the proceeds of which pledged, to an unaffiliated and unrelated institutional lender for fair value prior to the issuance of the notice scheduling the hearing, without the **City** incurring any penalty or damages on account of such cancellation or termination; monies lawfully due for goods delivered, work done, rentals, or fees accrued prior to the cancellation or termination shall be paid by the **City**.

63.7 The **Commissioner** shall consider and address in reaching his/her determination and in assessing an appropriate penalty the factors in Articles 63.7.1 and 63.7.2. The **Commissioner** may also consider, if relevant and appropriate, the criteria established in Articles 63.7.3 and 63.7.4, in addition to any other information which may be relevant and appropriate:

63.7.1 The party's good faith endeavors or lack thereof to cooperate fully and faithfully with any governmental investigation or audit, including but not limited to the discipline, discharge, or disassociation of any person failing to testify, the production of accurate and complete books and records, and the forthcoming testimony of all other members, agents, assignees or fiduciaries whose testimony is sought.

63.7.2 The relationship of the person who refused to testify to any entity that is a party to the hearing, including but not limited to, whether the person whose testimony is sought has an ownership interest in the entity and/or the degree of authority and responsibility the person has within the entity.

63.7.3 The nexus of the testimony sought to the subject entity and its contracts, leases, permits or licenses with the **City**.

63.7.4 The effect a penalty may have on an unaffiliated and unrelated party or entity that has a significant interest in an entity subject to penalties under Article 63.6, provided that the party or entity has given actual notice to the **Commissioner** upon the acquisition of the interest, or at the hearing called for in Article 63.4, gives notice and proves that such interest was previously acquired. Under either circumstance the party or entity shall present evidence at the hearing demonstrating the potential adverse impact a penalty will have on such person or entity.

63.8 Definitions:

63.8.1 The term "license" or "permit" as used in this Article 63 shall be defined as a license, permit, franchise or concession not granted as a matter of right.

63.8.2 The term "person" as used in this Article 63 shall be defined as any natural person doing business alone or associated with another person or entity as a partner, director, officer, principal or employee.

63.8.3 The term "entity" as used in this Article 63 shall be defined as any firm, partnership, corporation, association, joint venture, or person that receives monies, benefits, licenses, leases, or permits from or through the **City** or otherwise transacts business with the **City**.

63.8.4 The term "member" as used in this Article 63 shall be defined as any person associated with another person or entity as a partner, director, officer, principal or employee.

63.9 In addition to and notwithstanding any other provision of this **Contract**, the **Commissioner** may in his/her sole discretion terminate this **Contract** upon not less than three (3) **Days'** written notice in the event the **Contractor** fails to promptly report in writing to the **Commissioner** of the Department of Investigations ("DOI") of the **City** any solicitation of money, goods, requests for future employment or other benefit or thing of value, by or on behalf of any employee of the **City** or other person, firm, corporation or entity for any purpose which may be related to the procurement or obtaining of this **Contract** by the **Contractor**, or affecting the performance of this **Contract**.

ARTICLE 64. TERMINATION BY THE CITY

64.1 In addition to termination pursuant to any other article of this **Contract**, the **Commissioner** may, at any time, terminate this **Contract** by written notice to the **Contractor**. In the event of termination, the **Contractor** shall, upon receipt of such notice, unless otherwise directed by the **Commissioner**:

64.1.1 Stop **Work** on the date specified in the notice;

64.1.2 Take such action as may be necessary for the protection and preservation of the **City's** materials and property;

64.1.3 Cancel all cancelable orders for material and equipment;

64.1.4 Assign to the **City** and deliver to the **Site** or another location designated by the **Commissioner**, any non-cancelable orders for material and equipment that is not capable of use except in the performance of this **Contract** and has been specifically fabricated for the sole purpose of this **Contract** and not incorporated in the **Work**;

64.1.5 Take no action which will increase the amounts payable by the **City** under this **Contract**.

64.2 In the event of termination by the **City** pursuant to this Article 64, payment to the **Contractor** shall be in accordance with Articles 64.2.1, 64.2.2 or 64.2.3, to the extent that each respective article applies.

64.2.1 Lump Sum Contracts or Items: On all lump sum **Contracts**, or on lump sum items in a **Contract**, the **City** will pay the **Contractor** the sum of the amounts described in Articles 64.2.1(a) and 64.2.1(b), less all payments previously made pursuant to this **Contract**. On lump sum **Contracts** only, the **City** will also pay the **Contractor** an additional sum as provided in Article 64.2.1(c).

64.2.1(a) For **Work** completed prior to the notice of termination, the **Contractor** shall be paid a pro rata portion of the lump sum bid amount, plus approved change orders, based upon the percent completion of the **Work**, as determined by the **Commissioner**. For the purpose of determining the pro rata portion of the lump sum bid amount to which the **Contractor** is entitled, the bid breakdown submitted in accordance with Article 41 shall be considered, but shall not be dispositive. The **Commissioner's** determination hereunder shall be final, binding, and conclusive.

64.2.1(b) For non-cancelable material and equipment that is not capable of use except in the performance of this **Contract** and has been specifically fabricated for the sole purpose of this **Contract**, but not yet incorporated in the **Work**, the **Contractor** shall be paid the lesser of the following, less salvage value:

64.2.1(b)(i) The Direct Cost, as defined in Article 64.2.4; or

64.2.1(b)(ii) The fair and reasonable value, if less than Direct Cost, of such material and equipment, plus necessary and reasonable delivery costs.

64.2.1(b)(iii) In addition, the **Contractor** shall be paid five (5%) percent of the amount described in Article 64.2.1(b)(i) or Article 64.2.1(b)(ii), whichever applies.

64.2.1(c) Except as otherwise provided in Article 64.2.1(d), on all lump sum **Contracts**, the **Contractor** shall be paid the percentage indicated below applied to the difference between the total lump sum bid amount and the total of all payments made prior to the notice of termination plus all payments allowed pursuant to Articles 64.2.1(a) and 64.2.1(b):

64.2.1(c)(i) Five (5%) percent of the first five million ($5,000,000) dollars; and

64.2.1(c)(ii) Three (3%) percent of any amount between five million ($5,000,000) dollars and fifteen million ($15,000,000) dollars; plus

64.2.1(c)(iii) One (1%) percent of any amount over fifteen million ($15,000,000) dollars.

64.2.1(d) In the event the **City** terminates a lump sum **Contract** pursuant to this Article 64 within ninety (90) **Days** after registration of the **Contract** with the **Comptroller**, the **Contractor** shall be paid one (1%) percent of the difference between the lump sum bid amount and the total of all payments made pursuant to this Article 64.2.

64.2.2 Unit Price Contracts or Items: On all unit price **Contracts**, or on unit price items in a **Contract**, the **City** will pay the **Contractor** the sum of the amounts described in Articles 64.2.2(a) and 64.2.2(b), less all payments previously made pursuant to this **Contract**:

64.2.2(a) For all completed units, the unit price stated in the **Contract**, and

64.2.2(b) For units that have been ordered but are only partially completed, the **Contractor** will be paid:

64.2.2(b)(i) A pro rata portion of the unit price stated in the **Contract** based upon the percent completion of the unit and

64.2.2(b)(ii) For non-cancelable material and equipment, payment will be made pursuant to Article 64.2.1(b).

64.2.3 Time and Materials Contracts or Items Based on Time and Material Records: On all **Contracts** or items in a **Contract** where payment for the **Work** is based on time and

material records, the **Contractor** shall be paid in accordance with Article 26, less all payments previously made pursuant to this **Contract**.

64.2.4 Direct Costs: Direct Costs as used in this Article 64.2 shall mean:

64.2.4(a) The actual purchase price of material and equipment, plus necessary and reasonable delivery costs,

64.2.4(b) The actual cost of labor involved in construction and installation at the **Site**, and

64.2.4(c) The actual cost of necessary bonds and insurance purchased pursuant to requirements of this **Contract** less any amounts that have been or should be refunded by the **Contractor's** sureties or insurance carriers.

64.2.4(d) Direct Costs shall not include overhead.

64.3 In no event shall any payments under this Article 64 exceed the **Contract** price for such items.

64.4 All payments pursuant to Article 64 shall be in the nature of liquidated damages and shall be accepted by the **Contractor** in full satisfaction of all claims against the **City**.

64.5 The **City** may deduct or set off against any sums due and payable pursuant to this Article 64, any deductions authorized by this **Contract** or by **Law** (including but not limited to liquidated damages) and any claims it may have against the **Contractor**. The **City's** exercise of the right to terminate the **Contract** pursuant to this Article 64 shall not impair or otherwise effect the **City's** right to assert any claims it may have against the **Contractor** in a plenary action.

64.6 Where the **Work** covered by the **Contract** has been substantially completed, as determined in writing by the **Commissioner**, termination of the **Work** shall be handled as an omission of **Work** pursuant to Articles 29 and 33, in which case a change order will be issued to reflect an appropriate reduction in the **Contract** sum, or if the amount is determined after final payment, such amount shall be paid by the **Contractor**.

ARTICLE 65. CHOICE OF LAW, CONSENT TO JURISDICTION AND VENUE

65.1 This **Contract** shall be deemed to be executed in the **City** regardless of the domicile of the **Contractor**, and shall be governed by and construed in accordance with the **Laws** of the State of New York and the **Laws** of the United States, where applicable.

65.2 The parties agree that any and all claims asserted against the **City** arising under this **Contract** or related thereto shall be heard and determined in the courts of the State of New York ("New York State Courts") located in the **City** and County of New York. To effect this **Contract** and intent, the **Contractor** agrees:

65.2.1 If the **City** initiates any action against the **Contractor** in Federal court or in a New York State Court, service of process may be made on the **Contractor** either in person, wherever such **Contractor** may be found, or by registered mail addressed to the **Contractor** at its address as set forth in this **Contract**, or to such other address as the **Contractor** may provide to the **City** in writing; and

65.2.2 With respect to any action between the **City** and the **Contractor** in a New York State Court, the **Contractor** hereby expressly waives and relinquishes any rights it might otherwise have:

65.2.2(a) To move to dismiss on grounds of forum non conveniens;

65.2.2(b) To remove to Federal Court; and

65.2.2(c) To move for a change of venue to a New York State Court outside New York County.

65.2.3 With respect to any action brought by the **City** against the **Contractor** in a Federal Court located in the **City**, the **Contractor** expressly waives and relinquishes any right it might otherwise have to move to transfer the action to a Federal Court outside the **City**.

65.2.4 If the **Contractor** commences any action against the **City** in a court located other than in the **City** and County of New York, upon request of the **City**, the **Contractor** shall either consent to a transfer of the action to a New York State Court of competent jurisdiction located in the **City** and County of New York or, if the Court where the action is initially brought will not or cannot transfer the action, the **Contractor** shall consent to dismiss such action without prejudice and may thereafter reinstate the action in a New York State Court of competent jurisdiction in New York County.

65.3 If any provision(s) of this Article 65 is held unenforceable for any reason, each and all other provision(s) shall nevertheless remain in full force and effect.

ARTICLE 66. PARTICIPATION IN AN INTERNATIONAL BOYCOTT

66.1 The **Contractor** agrees that neither the **Contractor** nor any substantially owned affiliated company is participating or shall participate in an international boycott in violation of the provisions of the Federal Export Administration Act of 1979, as amended, or the regulations of the United States Department of Commerce (Commerce Department) promulgated thereunder.

66.2 Upon the final determination by the Commerce Department or any other agency of the United States as to, or conviction of the **Contractor** or a substantially-owned affiliated company thereof for participation in an international boycott in violation of the provisions of the Export Administration Act of 1979, as amended, or the regulations promulgated thereunder, the **Comptroller** may, at his/her option, render forfeit and void this **Contract**.

66.3 The **Contractor** shall comply in all respects, with the provisions of Section 6-114 of the Administrative Code and the rules and regulations issued by the **Comptroller** thereunder.

ARTICLE 67. LOCALLY BASED ENTERPRISE PROGRAM

67.1 This **Contract** is subject to the requirements of Section 6-108.1 of the Administrative Code and regulations promulgated thereunder. No construction contract shall be awarded unless and until these requirements have been complied with in their entirety; however, compliance with this Article 67 is not required if the Agency sets Subcontractor Participation Goals for Minority- and Women-Owned Business Enterprises (M/WBEs).

67.2 Unless specifically waived by the **Commissioner** with the approval of the Division of Economic and Financial Opportunity of the **City** Department of Business Services, if any portion of the **Contract** is subcontracted, not less than ten (10%) percent of the total dollar amount of the **Contract** shall be awarded to locally based enterprises (LBEs); except that where less than ten (10%) percent of the total dollar amount of the **Contract** is subcontracted, such lesser percentage shall be so awarded.

67.3 The **Contractor** shall not require performance and payment bonds from LBE **Subcontractors**.

67.4 If the **Contractor** has indicated prior to award that no **Work** will be subcontracted, no **Work** shall be subcontracted without the prior approval of the **Commissioner**, which shall be granted only if the **Contractor** makes a good faith effort beginning at least six (6) weeks before the **Work** is to be performed to obtain LBE **Subcontractors** to perform the **Work**.

67.5 If the **Contractor** has not identified sufficient LBE **Subcontractors** prior to award, it shall sign a letter of compliance stating that it complies with Section 6-108.1 of the Administrative Code, recognizes that achieving the LBE requirement is a condition of its **Contract**, and shall submit documentation demonstrating its good faith efforts to obtain LBEs. After award, the **Contractor** shall begin to solicit LBE's to perform subcontracted **Work** at least six (6) weeks before the date such **Work** is to be performed and shall demonstrate that a good faith effort has been made to obtain LBEs on each subcontract until it meets the required percentage.

67.6 Failure of the **Contractor** to comply with the requirements of Section 6-108.1 of the Administrative Code and the regulations promulgated thereunder shall constitute a material breach of this **Contract**. Remedy for such breach may include the imposition of any or all of the following sanctions:

67.6.1 Reducing the **Contractor's** compensation by an amount equal to the dollar value of the percentage of the LBE subcontracting requirement not complied with;

67.6.2 Declaring the **Contractor** in default;

67.6.3 If the **Contractor** is an LBE, de-certifying and declaring the **Contractor** ineligible to participate in the LBE program for a period of up to three (3) years.

ARTICLE 68. ANTITRUST

68.1 The **Contractor** hereby assigns, sells, and transfers to the **City** all right, title, and interest in and to any claims and causes of action arising under the antitrust **Laws** of New York State or of the United States relating to the particular goods or services purchased or procured by the **City** under this **Contract**.

ARTICLE 69. MacBRIDE PRINCIPLES PROVISIONS

69.1 Notice To All Prospective **Contractors**:

69.1.1 Local Law No. 34 of 1991 became effective on September 10, 1991 and added Section 6-115.1 of the Administrative Code. The local **Law** provides for certain restrictions on **City Contracts** to express the opposition of the people of the **City** to employment discrimination practices in Northern Ireland to promote freedom of work-place opportunity.

69.1.2 Pursuant to Section 6-115.1, prospective **Contractors** for **Contracts** to provide goods or services involving an expenditure of an amount greater than ten thousand

($10,000.) dollars, or for construction involving an amount greater than fifteen thousand ($15,000.) dollars, are asked to sign a rider in which they covenant and represent, as a material condition of their **Contract**, that any business operations in Northern Ireland conducted by the **Contractor** and any individual or legal entity in which the **Contractor** holds a ten (10%) percent or greater ownership interest in the **Contractor** will be conducted in accordance with the MacBride Principles of nondiscrimination in employment.

69.1.3 Prospective **Contractors** are not required to agree to these conditions. However, in the case of **Contracts** let by competitive sealed bidding, whenever the lowest responsible bidder has not agreed to stipulate to the conditions set forth in this notice and another bidder who has agreed to stipulate to such conditions has submitted a bid within five (5%) percent of the lowest responsible bid for a **Contract** to supply goods, services or contraction of comparable quality, the **Agency** shall refer such bids to the Mayor, the Speaker or other officials, as appropriate, who may determine, in accordance with applicable **Law**, that it is in the best interest of the **City** that the **Contract** be awarded to other than the lowest responsible pursuant to Section 313(b)(2) of the **City** Charter.

69.1.4 In the case of **Contracts** let by other than competitive sealed bidding, if a prospective **Contractor** does not agree to these conditions, no **Agency**, elected official or the **City** Council shall award the **Contract** to that bidder unless the **Agency** seeking to use the goods, services or construction certifies in writing that the **Contract** is necessary for the **Agency** to perform its functions and there is no other responsible **Contractor** who will supply goods, services or construction of comparable quality at a comparable price.

69.2 In accordance with Section 6-115.1 of the Administrative Code, the **Contractor** stipulates that such **Contractor** and any individual or legal entity in which the **Contractor** holds a ten (10%) percent or greater ownership interest in the **Contractor** either:

69.2.1 Have no business operations in Northern Ireland, or

69.2.2 Shall take lawful steps in good faith to conduct any business operations they have in Northern Ireland in accordance with the MacBride Principles, and shall permit independent monitoring of their compliance with such principles.

69.3 For purposes of this Article, the following terms shall have the following meanings:

69.3.1 "MacBride Principles" shall mean those principles relating to nondiscrimination in employment and freedom of work-place opportunity which require employers doing business in Northern Ireland to:

69.3.1(a) increase the representation of individuals from under-represented religious groups in the workforce, including managerial, supervisory, administrative, clerical and technical jobs;

69.3.1(b) take steps to promote adequate security for the protection of employees from under-represented religious groups both at the work-place and while traveling to and from **Work**;

69.3.1(c) ban provocative religious or political emblems from the workplace;

69.3.1(d) publicly advertise all job openings and make special recruitment efforts to attract applicants from under-represented religious groups;

69.3.1(e) establish layoff, recall, and termination procedures which do not in practice favor a particular religious group;

69.3.1(f) abolish all job reservations, apprenticeship restrictions and different employment criteria which discriminate on the basis of religion;

69.3.1(g) develop training programs that will prepare substantial numbers of current employees from under-represented religious groups for skilled jobs, including the expansion of existing programs and the creation of new programs to train, upgrade, and improve the skills of workers from under-represented religious groups;

69.3.1(h) establish procedures to asses, identify, and actively recruit employees from under-represented religious groups with potential for further advancement; and

69.3.1(i) appoint a senior management staff member to oversee affirmative action efforts and develop a timetable to ensure their full implementation.

69.4 The **Contractor** agrees that the covenants and representations in Article 69.2 are material conditions to this **Contract**. In the event the **Agency** receives information that the **Contractor** who made the stipulation required by this Article 69 is in violation thereof, the **Agency** shall review such information and give the **Contractor** an opportunity to respond. If the **Agency** finds that a violation has occurred, the **Agency** shall have the right to declare the **Contractor** in default in default and/or terminate this **Contract** for cause and procure supplies, services or **Work** from another source in the manner the **Agency** deems proper. In the event of such termination, the **Contractor** shall pay to the **Agency**, or the **Agency** in its sole discretion may withhold from any amounts otherwise payable to the **Contractor**, the difference between the **Contract** price for the uncompleted portion of this **Contract** and the cost to the **Agency** of completing performance of this **Contract** either itself or by engaging another **Contractor** or **Contractors**. In the case of a requirement **Contract**, the **Contractor** shall be liable for such difference in price for the entire amount of supplies required by the **Agency** for the uncompleted term of **Contractor's Contract**. In the case of a construction **Contract**, the **Agency** shall also have the right to hold the **Contractor** in partial or total default in accordance with the default provisions of this **Contract**, and/or may seek debarment or suspension of the **Contractor**. The rights and remedies of the **Agency** hereunder shall be in addition to, and not in lieu of, any rights and remedies the **Agency** has pursuant to this **Contract** or by operation of **Law**.

ARTICLE 70. ELECTRONIC FILING/NYC DEVELOPMENT HUB

70.1 The **Contractor** shall electronically file all alteration type-2 and alteration type-3 applications via the New York City Development Hub Web site, except applications for the following types of minor alterations: enlargements, curb cuts, legalizations, fire alarms, builders pavement plans, and jobs filed on Landmark Preservation Commission calendared properties. All such filings must be professionally certified. Information about electronic filing via the New York City Development Hub is available on the **City** Department of Buildings Web site at www.nyc.gov/buildings.

ARTICLE 71. PROHIBITION OF TROPICAL HARDWOODS

71.1 Tropical hardwoods, as defined in Section 165 of the New York State Finance Law (Finance Law), shall not be utilized in the performance of this **Contract** except as expressly permitted by Section 165 of the Finance Law.

ARTICLE 72. CONFLICTS OF INTEREST

72.1 Section 2604 of the **City** Charter and other related provisions of the **City** Charter, the Administrative Code, and the Penal Law are applicable under the terms of this **Contract** in relation to conflicts of interest and shall be extended to **Subcontractors** authorized to perform **Work**, labor and services pursuant to this **Contract** and further, it shall be the duty and responsibility of the **Contractor** to so inform its respective **Subcontractors**. Notice is hereby given that, under certain circumstances, penalties may be invoked against the donor as well as the recipient of any form of valuable gift.

ARTICLE 73. MERGER CLAUSE

73.1 The written **Contract** herein, contains all the terms and conditions agreed upon by the parties hereto, and no other agreement, oral or otherwise, regarding the subject matter of this **Contract** shall be deemed to exist or to bind any of the parties hereto, or to vary any of the terms contained herein.

ARTICLE 74. STATEMENT OF WORK

74.1 The **Contractor** shall furnish all labor and materials and perform all **Work** in strict accordance with the **Specifications** and **Addenda** thereto, numbered 5.

ARTICLE 75. COMPENSATION TO BE PAID TO CONTRACTOR

75.1 The **City** will pay and the **Contractor** will accept in full consideration for the performance of the **Contract**, subject to additions and deductions as provided herein, the total sum of: Twenty two million one hundred ninety thousand Dollars, ($22,190,000.00), this said sum being the amount at which the **Contract** was awarded to the **Contractor** at a public letting thereof, based upon the **Contractor's** bid for the **Contract**.

ARTICLE 76. ELECTRONIC FUNDS TRANSFER

76.1 In accordance with Section 6-107.1 of the Administrative Code, the **Contractor** agrees to accept payments under this **Contract** from the **City** by electronic funds transfer (EFT). An EFT is any transfer of funds, other than a transaction originated by check, draft or similar paper instrument, which is initiated through an electronic terminal, telephonic instrument or computer or magnetic tape so as to order, instruct or authorize a financial institution to debit or credit an account. Prior to the first payment made under this **Contract**, the **Contractor** shall designate one financial institution or other authorized payment agent and shall complete the attached "EFT Vendor Payment Enrollment Form" in order to provide the Commissioner of the **City** Department of Finance with information necessary for the **Contractor** to receive electronic funds transfer payments through a designated financial institution or authorized payment agent. The crediting of the amount of a payment to the appropriate account on the books of a financial institution or other authorized payment agent designated by the **Contractor** shall constitute full satisfaction by the **City** for the amount of the payment under this **Contract**. The account information supplied by the **Contractor** to facilitate the electronic funds transfer shall remain confidential to the fullest extent provided by **Law**.

76.2 The **Commissioner** may waive the application of the requirements of this Article 76 to payments on contracts entered into pursuant to Section 315 of the **City** Charter. In addition, the Commissioner of the Department of Finance and the Comptroller may jointly issue standards pursuant to

which the **Agency** may waive the requirements of this Article 76 for payment in the following circumstances: (i) for individuals or classes of individuals for whom compliance imposes a hardship; (ii) for classifications or types of checks; or (iii) in other circumstances as may be necessary in the interest of the **City**.

ARTICLE 77. RECORDS RETENTION

77.1 The **Contractor** agrees to retain all books, records, and other documents relevant to this **Contract** for six years after the final payment or termination of this **Contract**, whichever is later. **City**, state, and federal auditors and any other persons duly authorized by the **City** shall have full access to and the right to examine any such books, records, and other documents during the retention period.

ARTICLE 78. PARTICIPATION BY MINORITY-OWNED AND WOMEN-OWNED BUSINESS ENTERPRISES IN CITY PROCUREMENT

NOTICE TO ALL PROSPECTIVE CONTRACTORS

ARTICLE I. M/WBE PROGRAM

Local Law No. 129 of 2005 added and Local Law 1 of 2013 amended Section 6-129 of the Administrative Code of the City of New York (hereinafter "Section 6-129"). Section 6-129 establishes the program for participation in City procurement ("M/WBE Program") by minority- owned business enterprises ("MBEs") and women-owned business enterprises ("WBEs"), certified in accordance with Section 1304 of the New York City Charter. As stated in Section 6-129, the intent of the program is to address the impact of discrimination on the City's procurement process, and to promote the public interest in avoiding fraud and favoritism in the procurement process, increasing competition for City business, and lowering contract costs. The contract provisions contained herein are pursuant to Section 6-129, and the rules of the Department of Small Business Services ("DSBS") promulgated thereunder.

If this Contract is subject to the M/WBE Program established by Section 6-129, the specific requirements of MBE and/or WBE participation for this Contract are set forth in Schedule B of the Contract (entitled the "M/WBE Utilization Plan"), and are detailed below. The Contractor must comply with all applicable MBE and WBE requirements for this Contract.

All provisions of Section 6-129 are hereby incorporated in the Contract by reference and all terms used herein that are not defined herein shall have the meanings given such terms in Section 6-129. Article I, Part A, below, sets forth provisions related to the participation goals for construction, standard and professional services contracts. Article I, Part B, below, sets forth miscellaneous provisions related to the M/WBE Program.

PART A

PARTICIPATION GOALS FOR CONSTRUCTION, STANDARD AND PROFESSIONAL SERVICES CONTRACTS OR TASK ORDERS

1. The **MBE and/or WBE Participation Goals** established for this Contract or Task Orders issued pursuant to this Contract, ("**Participation Goals**"), as applicable, are set forth on Schedule B, Part I to this Contract (see Page 1, line 1 Total Participation Goals) or will be set forth on Schedule B, Part I to Task Orders issued pursuant to this Contract, as applicable.

The **Participation Goals** represent a percentage of the total dollar value of the Contract or Task Order, as applicable, that may be achieved by awarding subcontracts to firms certified with New York City Department of Small Business Services as MBEs and/or WBEs, and/or by crediting the participation of prime contractors and/or qualified joint ventures as provided in Section 3 below, unless the goals have been waived or modified by Agency in accordance with Section 6-129 and Part A, Sections 10 and 11 below, respectively.

2. If **Participation Goals** have been established for this Contract or Task Orders issued pursuant to this Contract, Contractor agrees or shall agree as a material term of the Contract that Contractor shall be subject to the **Participation Goals**, unless the goals are waived or modified by Agency in accordance with Section 6-129 and Part A, Sections 10 and 11 below, respectively.

3. If **Participation Goals** have been established for this Contract or Task Order issued pursuant to this Contract, a Contractor that is an MBE and/or WBE shall be permitted to count its own participation toward fulfillment of the relevant **Participation Goal**, provided that in accordance with Section 6-129 the value of Contractor's participation shall be determined by subtracting from the total value of the Contract or Task Order, as applicable, any amounts that the Contractor pays to direct subcontractors (as defined in Section 6-129(c)(13)), and provided further that a Contractor that is certified as both an MBE and a WBE may count its own participation either toward the goal for MBEs or the goal for WBEs, but not both.

A Contractor that is a qualified joint venture (as defined in Section 6-129(c)(30)) shall be permitted to count a percentage of its own participation toward fulfillment of the relevant **Participation Goal**. In accordance with Section 6-129, the value of Contractor's participation shall be determined by subtracting from the total value of the Contract or Task Order, as applicable, any amounts that Contractor pays to direct subcontractors, and then multiplying the remainder by the percentage to be applied to total profit to determine the amount to which an MBE or WBE is entitled pursuant to the joint venture agreement, provided that where a participant in a joint venture is certified as both an MBE and a WBE, such amount shall be counted either toward the goal for MBEs or the goal for WBEs, but not both.

4. A. If **Participation Goals** have been established for this Contract, a prospective contractor shall be required to submit with its bid or proposal, as applicable, a completed Schedule B, M/WBE Utilization Plan, Part II (see Pages 2-4) indicating: (a) whether the contractor is an MBE or WBE, or qualified joint venture; (b) the percentage of work it intends to award to direct subcontractors; and (c) in cases where the contractor intends to award direct subcontracts, a description of the type and dollar value of work designated for participation by MBEs and/or WBEs, and the time frames in which such work is scheduled to begin and end. In the event that this M/WBE Utilization Plan indicates that the bidder or proposer, as applicable, does not intend to meet the **Participation Goals**, the bid or proposal, as applicable, shall be deemed non-responsive, unless Agency has granted the bidder or proposer, as applicable, a pre- award waiver of the Participation Goals in accordance with Section 6-129 and Part A, Section 10 below.

B. (i) If this Contract is for a master services agreement or other requirements type contract that will result in the issuance of Task Orders that will be individually registered ("Master Services Agreement") and is subject to M/WBE **Participation Goals**, a prospective contractor shall be required to submit with its bid or proposal, as applicable, a completed Schedule B, M/WBE Participation Requirements for Master Services Agreements That Will Require Individually Registered Task Orders, Part II (page 2) indicating the prospective contractor's certification and required affirmations to make all reasonable good faith efforts to meet participation goals established on each individual Task Order issued pursuant to this Contract, or if a partial waiver is obtained or such goals are modified by the Agency, to meet the modified **Participation Goals** by soliciting and obtaining the participation of certified MBE and/or WBE firms. In the event that the Schedule B indicates that the bidder or proposer, as applicable, does not intend to meet the **Participation Goals** that may be established on Task Orders issued pursuant to this Contract, the bid or proposal, as applicable, shall be deemed nonresponsive.

(ii) **Participation Goals** on a Master Services Agreement will be established for individual Task Orders issued after the Master Services Agreement is awarded. If **Participation Goals** have been established on a Task Order, a contractor shall be required to submit a Schedule B – M/WBE Utilization Plan For Independently Registered Task Orders That Are Issued Pursuant to Master Services Agreements, Part II (see Pages 2-4) indicating: (a) whether the contractor is an MBE or WBE, or qualified joint venture; (b) the percentage of work it intends to award to direct subcontractors; and (c) in cases where the contractor intends to award direct subcontracts, a description of the type and dollar value of work designated for participation by MBEs and/or WBEs, and the time frames in which such work is scheduled to begin and end. The contractor must engage in good faith efforts to meet the **Participation Goals** as established for the Task Order unless Agency has granted the contractor a pre-award waiver of the Participation Goals in accordance with Section 6-129 and Part A, Section 10 below.

C. THE BIDDER/PROPOSER MUST COMPLETE THE SCHEDULE B INCLUDED HEREIN (SCHEDULE B, PART II). A SCHEDULE B SUBMITTED BY THE BIDDER/PROPOSER WHICH DOES NOT INCLUDE THE VENDOR CERTIFICATION AND REQUIRED AFFIRMATIONS (SEE SECTION V OF PART II) WILL BE DEEMED TO BE NON-RESPONSIVE, UNLESS A FULL WAIVER OF THE PARTICIPATION GOALS IS GRANTED (SCHEDULE B, PART III). IN THE EVENT THAT THE CITY DETERMINES THAT THE BIDDER/PROPOSER HAS SUBMITTED A SCHEDULE B WHERE THE VENDOR CERTIFICATION AND REQUIRED AFFIRMATIONS ARE COMPLETED BUT OTHER ASPECTS OF THE SCHEDULE B ARE NOT COMPLETE, OR CONTAIN A COPY OR COMPUTATION ERROR THAT IS AT ODDS WITH THE VENDOR CERTIFICATION AND AFFIRMATIONS, THE BIDDER/PROPOSER WILL BE NOTIFIED BY THE AGENCY AND WILL BE GIVEN FOUR (4) CALENDAR DAYS FROM RECEIPT OF NOTIFICATION TO CURE THE SPECIFIED DEFICIENCIES AND RETURN A COMPLETED SCHEDULE B TO THE AGENCY. FAILURE TO DO SO WILL RESULT IN A DETERMINATION THAT THE BID/PROPOSAL IS NON-RESPONSIVE. RECEIPT OF NOTIFICATION IS DEFINED AS THE DATE NOTICE IS E-MAILED OR FAXED (IF THE BIDDER/PROPOSER HAS PROVIDED AN E-MAIL ADDRESS OR FAX NUMBER), OR NO LATER THAN FIVE (5) CALENDAR DAYS FROM THE DATE OF MAILING OR UPON DELIVERY, IF DELIVERED.

5. Where an **M/WBE** Utilization Plan has been submitted, the Contractor shall, within 30 days of issuance by Agency of a notice to proceed, submit a list of proposed persons or entities to which it intends to award subcontracts within the subsequent 12 months. In the case of multiyear contracts, such list shall also be submitted every year thereafter. The Agency may also require the Contractor to report periodically about the contracts awarded by its direct subcontractors to indirect subcontractors (as defined in Section 6-129(c)(22)). **PLEASE NOTE: If this Contract is a public works project subject to GML §101(5) (i.e., a contract valued at or below $3M for projects in New York City) or if the Contract is subject to a project labor agreement in accordance with Labor Law §222, and the bidder is required to identify at the time of bid submission its intended subcontractors for the Wicks trades (plumbing and gas fitting; steam heating, hot water heating, ventilating and air conditioning (HVAC); and electric wiring), the Contractor must identify all those to which it intends to award construction subcontracts for any portion of the Wicks trade work at the time of bid submission, regardless of what point in the life of the contract such subcontracts will occur. In identifying intended subcontractors in the bid submission, bidders may satisfy any Participation Goals established for this Contract by proposing one or more subcontractors that are MBEs and/or WBEs for any portion of the Wicks trade work.** In the event that the Contractor's selection of a subcontractor is disapproved, the Contractor shall have a reasonable time to propose alternate subcontractors.

6. MBE and WBE firms must be certified by DSBS in order for the Contractor to credit such firms' participation toward the attainment of the **Participation Goals**. Such certification must occur prior to the

firms' commencement of work. A list of MBE and WBE firms may be obtained from the DSBS website at www.nyc.gov/buycertified, by emailing DSBS at buyer@sbs.nyc.gov, by calling (212) 513-6356, or by visiting or writing DSBS at 110 William St., New York, New York, 10038, 7th floor. Eligible firms that have not yet been certified may contact DSBS in order to seek certification by visiting www.nyc.gov/getcertified, emailing MWBE@sbs.nyc.gov, or calling the DSBS certification helpline at (212) 513-6311. A firm that is certified as both an MBE and a WBE may be counted either toward the goal for MBEs or the goal for WBEs, but not both. No credit shall be given for participation by a graduate MBE or graduate WBE, as defined in Section 6-129(c)(20).

7. Where an **M/WBE** Utilization Plan has been submitted, the Contractor shall, with each voucher for payment, and/or periodically as Agency may require, submit statements, certified under penalty of perjury, which shall include, but not be limited to,: the total amount the Contractor paid to its direct subcontractors, and, where applicable pursuant to Section 6-129(j), the total amount direct subcontractors paid to indirect subcontractors; the names, addresses and contact numbers of each MBE or WBE hired as a subcontractor by the Contractor, and, where applicable, hired by any of the Contractor's direct subcontractors; and the dates and amounts paid to each MBE or WBE. The Contractor shall also submit, along with its voucher for final payment: the total amount it paid to subcontractors, and, where applicable pursuant to Section 6-129(j), the total amount its direct subcontractors paid directly to their indirect subcontractors; and a final list, certified under penalty of perjury, which shall include the name, address and contact information of each subcontractor that is an MBE or WBE, the work performed by, and the dates and amounts paid to each.

8. If payments made to, or work performed by, MBEs or WBEs are less than the amount specified in the Contractor's **M/WBE** Utilization Plan, Agency shall take appropriate action, in accordance with Section 6-129 and Article II below, unless the Contractor has obtained a modification of its **M/WBE** Utilization Plan in accordance with Section 6-129 and Part A, Section 11 below.

9. Where an **M/WBE** Utilization Plan has been submitted, and the Contractor requests a change order the value of which exceeds the greater of 10 percent of the Contract or Task Order, as applicable, or $500,000, Agency shall review the scope of work for the Contract or Task Order, as applicable, and the scale and types of work involved in the change order, and determine whether the **Participation Goals** should be modified.

10. Pre-award waiver of the **Participation Goals**. (a) A bidder or proposer, or contractor with respect to a Task Order, may seek a pre-award full or partial waiver of the **Participation Goals** in accordance with Section 6-129, which requests that Agency change one or more **Participation Goals** on the grounds that the **Participation Goals** are unreasonable in light of the availability of certified firms to perform the services required, or by demonstrating that it has legitimate business reasons for proposing a lower level of subcontracting in its M/WBE Utilization Plan.

(b) To apply for a full or partial waiver of the **Participation Goals**, a bidder, proposer, or contractor, as applicable, must complete Part III (Page 5) of Schedule B and submit such request no later than seven (7) calendar days prior to the date and time the bids, proposals, or Task Orders are due, in writing to the Agency by email at poped@ddc.nyc.gov or via facsimile at (718) 391-1886. Bidders, proposers, or contractors, as applicable, who have submitted requests will receive an Agency response by no later than two (2) calendar days prior to the due date for bids, proposals, or Task Orders; provided, however, that if that date would fall on a weekend or holiday, an Agency response will be provided by close-of-business on the business day before such weekend or holiday date.

(c) If the Agency determines that the **Participation Goals** are unreasonable in light of the availability of certified firms to perform the services required, it shall revise the solicitation and extend the deadline for bids and proposals, or revise the Task Order, as applicable.

(d) Agency may grant a full or partial waiver of the **Participation Goals** to a bidder, proposer or contractor, as applicable, who demonstrates—before submission of the bid, proposal or Task Order, as applicable—that it has legitimate business reasons for proposing the level of subcontracting in its **M/WBE** Utilization Plan. In making its determination, Agency shall consider factors that shall include, but not be limited to, whether the bidder, proposer or contractor, as applicable, has the capacity and the bona fide intention to perform the Contract without any subcontracting, or to perform the Contract without awarding the amount of subcontracts represented by the **Participation Goals**. In making such determination, Agency may consider whether the **M/WBE** Utilization Plan is consistent with past subcontracting practices of the bidder, proposer or contractor, as applicable, whether the bidder, proposer or contractor, as applicable, has made efforts to form a joint venture with a certified firm, and whether the bidder, proposer, or contractor, as applicable, has made good faith efforts to identify other portions of the Contract that it intends to subcontract.

11. Modification of **M/WBE** Utilization Plan. (a) A Contractor may request a modification of its **M/WBE** Utilization Plan after award of this Contract. **PLEASE NOTE: If this Contract is a public works project subject to GML §101(5) (i.e., a contract valued at or below $3M for projects in New York City) or if the Contract is subject to a project labor agreement in accordance with Labor Law §222, and the bidder is required to identify at the time of bid submission its intended subcontractors for the Wicks trades (plumbing and gas fitting; steam heating, hot water heating, ventilating and air conditioning (HVAC); and electric wiring), the Contractor may request a Modification of its M/WBE Utilization Plan as part of its bid submission**. The Agency may grant a request for Modification of a Contractor's **M/WBE** Utilization Plan if it determines that the Contractor has established, with appropriate documentary and other evidence, that it made reasonable, good faith efforts to meet the **Participation Goals.** In making such determination, Agency shall consider evidence of the following efforts, as applicable, along with any other relevant factors:

(i) The Contractor advertised opportunities to participate in the Contract, where appropriate, in general circulation media, trade and professional association publications and small business media, and publications of minority and women's business organizations;
(ii) The Contractor provided notice of specific opportunities to participate in the Contract, in a timely manner, to minority and women's business organizations;
(iii) The Contractor sent written notices, by certified mail or facsimile, in a timely manner, to advise MBEs or WBEs that their interest in the Contract was solicited;
(iv) The Contractor made efforts to identify portions of the work that could be substituted for portions originally designated for participation by MBEs and/or WBEs in the M/WBE Utilization Plan, and for which the Contractor claims an inability to retain MBEs or WBEs;
(v) The Contractor held meetings with MBEs and/or WBEs prior to the date their bids or proposals were due, for the purpose of explaining in detail the scope and requirements of the work for which their bids or proposals were solicited;
(vi) The Contractor made efforts to negotiate with MBEs and/or WBEs as relevant to perform specific subcontracts, or act as suppliers or service providers;
(vii) Timely written requests for assistance made by the Contractor to Agency's M/WBE liaison officer and to DSBS;
(viii) Description of how recommendations made by DSBS and Agency were acted upon and an explanation of why action upon such recommendations did not lead to the desired level of participation of MBEs and/or WBEs.

Agency's M/WBE officer shall provide written notice to the Contractor of the determination.

(b) The Agency may modify the **Participation Goals** when the scope of the work has been changed by the Agency in a manner that affects the scale and types of work that the Contractor indicated in its **M/WBE** Utilization Plan would be awarded to subcontractors.

12. If this Contract is for an indefinite quantity of construction, standard or professional services or is a requirements type contract and the Contractor has submitted an **M/WBE** Utilization Plan and has committed to subcontract work to MBEs and/or WBEs in order to meet the **Participation Goals**, the Contractor will not be deemed in violation of the M/WBE Program requirements for this Contract with regard to any work which was intended to be subcontracted to an MBE and/or WBE to the extent that the Agency has determined that such work is not needed.

13. If **Participation Goals** have been established for this Contract or a Task Order issued pursuant to this Contract, at least once annually during the term of the Contract or Task Order, as applicable, Agency shall review the Contractor's progress toward attainment of its M/WBE Utilization Plan, including but not limited to, by reviewing the percentage of work the Contractor has actually awarded to MBE and/or WBE subcontractors and the payments the Contractor made to such subcontractors.

14. If **Participation Goals** have been established for this Contract or a Task Order issued pursuant to this Contract, Agency shall evaluate and assess the Contractor's performance in meeting those goals, and such evaluation and assessment shall become part of the Contractor's overall contract performance evaluation.

PART B: MISCELLANEOUS

1. The Contractor shall take notice that, if this solicitation requires the establishment of an **M/WBE** Utilization Plan, the resulting contract may be audited by DSBS to determine compliance with Section 6-129. See §6-129(e)(10). Furthermore, such resulting contract may also be examined by the City's Comptroller to assess compliance with the **M/WBE** Utilization Plan.

2. Pursuant to DSBS rules, construction contracts that include a requirement for an **M/WBE** Utilization Plan shall not be subject to the law governing Locally Based Enterprises set forth in Section 6-108.1 of the Administrative Code of the City of New York.

3. DSBS is available to assist contractors and potential contractors in determining the availability of MBEs and/or WBEs to participate as subcontractors, and in identifying opportunities that are appropriate for participation by MBEs and/or WBEs in contracts.

4. Prospective contractors are encouraged to enter into qualified joint venture agreements with MBEs and/or WBEs as defined by Section 6-129(c)(30).

5. By submitting a bid or proposal the Contractor hereby acknowledges its understanding of the M/WBE Program requirements set forth herein and the pertinent provisions of Section 6-129, and any rules promulgated thereunder, and if awarded this Contract, the Contractor hereby agrees to comply with the M/WBE Program requirements of this Contract and pertinent provisions of Section 6-129, and any rules promulgated thereunder, all of which shall be deemed to be material terms of this Contract. The Contractor hereby agrees to make all reasonable, good faith efforts to solicit and obtain the participation of MBEs and/or WBEs to meet the required **Participation Goals**.

ARTICLE II. ENFORCEMENT

1. If Agency determines that a bidder or proposer, as applicable, has, in relation to this procurement, violated Section 6-129 or the DSBS rules promulgated pursuant to Section 6-129, Agency may disqualify such bidder or proposer, as applicable, from competing for this Contract and the Agency may revoke such bidder's or proposer's prequalification status, if applicable.

2. Whenever Agency believes that the Contractor or a subcontractor is not in compliance with Section 6-129 or the DSBS rules promulgated pursuant to Section 6-129, or any provision of this Contract that implements Section 6-129, including, but not limited to any **M/WBE** Utilization Plan, Agency shall send a written notice to the Contractor describing the alleged noncompliance and offering the Contractor an opportunity to be heard. Agency shall then conduct an investigation to determine whether such Contractor or subcontractor is in compliance.

3. In the event that the Contractor has been found to have violated Section 6-129, the DSBS rules promulgated pursuant to Section 6-129, or any provision of this Contract that implements Section 6-129, including, but not limited to, any **M/WBE** Utilization Plan, Agency may determine that one of the following actions should be taken:

(a) entering into an agreement with the Contractor allowing the Contractor to cure the violation;
(b) revoking the Contractor's pre-qualification to bid or make proposals for future contracts;
(c) making a finding that the Contractor is in default of the Contract;
(d) terminating the Contract;
(e) declaring the Contractor to be in breach of Contract;
(f) withholding payment or reimbursement;
(g) determining not to renew the Contract;
(h) assessing actual and consequential damages;
(i) assessing liquidated damages or reducing fees, provided that liquidated damages may be based on amounts representing costs of delays in carrying out the purposes of the M/WBE Program, or in meeting the purposes of the Contract, the costs of meeting utilization goals through additional procurements, the administrative costs of investigation and enforcement, or other factors set forth in the Contract;
(j) exercising rights under the Contract to procure goods, services or construction from another contractor and charge the cost of such contract to the Contractor that has been found to be in noncompliance; or
(k) taking any other appropriate remedy.

4. If an **M/WBE** Utilization Plan has been submitted, and pursuant to this Article II, Section 3, the Contractor has been found to have failed to fulfill its **Participation Goals** contained in its **M/WBE** Utilization Plan or the **Participation Goals** as modified by Agency pursuant to Article I, Part A, Section 11, Agency may assess liquidated damages in the amount of ten percent (10%) of the difference between the dollar amount of work required to be awarded to MBE and/or WBE firms to meet the **Participation Goals** and the dollar amount the Contractor actually awarded and paid, and/or credited, to MBE and/or WBE firms. In view of the difficulty of accurately ascertaining the loss which the City will suffer by reason of Contractor's failure to meet the **Participation Goals**, the foregoing amount is hereby fixed and agreed as the liquidated damages that the City will suffer by reason of such failure, and not as a penalty. Agency may deduct and retain out of any monies which may become due under this Contract the amount of any such liquidated damages; and in case the amount which may become due under this Contract shall be less than the amount of liquidated damages suffered by the City, the Contractor shall be liable to pay the difference.

5. Whenever Agency has reason to believe that an MBE and/or WBE is not qualified for certification, or is participating in a contract in a manner that does not serve a commercially useful function (as defined in Section 6-129(c)(8)), or has violated any provision of Section 6- 129, Agency shall notify the Commissioner of DSBS who shall determine whether the certification of such business enterprise should be revoked.

6. Statements made in any instrument submitted to Agency pursuant to Section 6-129 shall be submitted under penalty of perjury and any false or misleading statement or omission shall be grounds for the application of any applicable criminal and/or civil penalties for perjury. The making of a false or fraudulent statement by an MBE and/or WBE in any instrument submitted pursuant to Section 6-129 shall, in addition, be grounds for revocation of its certification.

7. The Contractor's record in implementing its **M/WBE** Utilization Plan shall be a factor in the evaluation of its performance. Whenever Agency determines that a Contractor's compliance with an **M/WBE** Utilization Plan has been unsatisfactory, Agency shall, after consultation with the City Chief Procurement Officer, file an advice of caution form for inclusion in VENDEX as caution data.

IN WITNESS WHEREOF, the Deputy Commissioner, on behalf of the City of New York, and the Contractor, have executed this agreement in quadruplicate, two parts of which are to remain with the Commissioner, another to be filed with the Comptroller of the City, and the fourth to be delivered to the Contractor.

THE CITY OF NEW YORK

By: _____
Deputy Commissioner

CONTRACTOR: Halcyon Construction Corp.

By: _____
(Member of Firm or Officer of Corporation)

Title: V.P.

(Where Contractor is a Corporation, add):
Attest:

_____
Secretary

(Seal)

_____

ACKNOWLEDGEMENT OF PRINCIPAL, IF A CORPORATION

State of New York County of Queens ss:

On this 23 day of NOV, 2016, before me personally came SILVIO LEOPOLDO to me known who, being by me duly sworn did depose and say that he resides at ORANGEBURG NY that he is the V.P. of the corporation described in and which executed the foregoing instrument; that he knows the seal of said corporation; that one of the seals affixed to said instrument is such seal; that it was so affixed by order of the directors of said corporation, and that he signed his name thereto by like order.

VICTORIA AYO-VAUGHAN
Notary Public, State of New York
Registration #01AY5014042
Qualified in Queens County
Commission Expires July 15, 2019

Notary Public or Commissioner of Deeds

ACKNOWLEDGEMENT OF PRINCIPAL, IF A PARTNERSHIP

State of _____ County of _____ ss:

On this _____ day of _____, _____, before me personally appeared _____ to me known, and known to me to be one of the members of the firm of _____ _____ described in and who executed the foregoing instrument; and he acknowledged to me that he executed the same as and for the act and deed of said firm.

Notary Public or Commissioner of Deeds

ACKNOWLEDGEMENT OF PRINCIPAL, IF AN INDIVIDUAL

State of _____ County of _____ ss:

On this _____ day of _____, _____, before me personally appeared _____ to me known, and known to me to be the person described in and who executed the foregoing instrument; and acknowledged that he executed the same.

Notary Public or Commissioner of Deeds

AUTHORITY

MAYOR'S CERTIFICATE NO. CBX DATED.
BUDGET DIRECTOR'S CERTIFICATE NO. DATED

APPROPRIATION
COMMISSIONER'S CERTIFICATE

In conformity with the provisions of Section 6-101 of the Administrative Code of the City of New York, it is hereby certified that the estimated cost of the work, materials and supplies required by the within Contract, amounting to

Twenty two million One Hundred Two Ninety Thousand

Dollars ($ 22,190,000.00

is chargeable to the fund of the Department of Design and Construction entitled Code

_____

_____

_____
Department of Design and Construction

I hereby certify that the specifications contained herein comply with the terms and conditions of the BUDGET.

Deputy Commissioner

COMPTROLLER'S CERTIFICATE

The City of New York_____

Pursuant to the provisions of Section 6-101 of the Administrative Code of the City of New York, I hereby certify that there remains unapplied and unexpended a balance of the above mentioned fund applicable to this Contract sufficient to pay the estimated expense of executing the same viz:

$_____

_____
Comptroller

ACKNOWLEDGEMENT BY COMMISSIONER

State of New York County of Queens ss:

On this 23 day of Nov, 2016, before me personally came Eric MacFarlane to me known, and known to be the Deputy Commissioner of the Department of Design and Construction of The City of New York, the person described as such in and who as such executed the foregoing instrument and acknowledged to me that he executed the same as Deputy Commissioner for the purposes therein mentioned.

VICTORIA AYO-VAUGHAN
Notary Public, State of New York
Registration #01AY5014042
Qualified in Queens County
Commission Expires July 15, 2019

Notary Public or Commissioner of Deeds

MAYOR'S CERTIFICATE OR CERTIFICATE OF THE DIRECTOR OF THE BUDGET

<u>Performance Bond #1 (Pages 92 to 95)</u>: Use if the total contract price is $5 Million Or Less. Performance Bond #1 has been approved by the U.S. Small Business Administration ("SBA") for participation in its Bond Guarantee Program.

PERFORMANCE BOND #1

KNOW ALL PERSONS BY THESE PRESENTS:,
That we, _____

_____

_____

hereinafter referred to as the "Principal,"
and, _____

_____

_____

hereinafter referred to as the "Surety" ("Sureties") are held and firmly bound to THE CITY OF NEW YORK, hereinafter referred to as the "City" or to its successors and assigns in the penal sum
of _____

_____

_____

($_____) Dollars, lawful money of the United States for the payment of which said sum of money well and truly to be made, we, and each of us, bind ourselves, our heirs, executors, administrators, successors and assigns, jointly and severally, firmly by these presents.

WHEREAS, the Principal is about to enter, or has entered, into a Contract in writing with the City for

_____

_____

a copy of which Contract is annexed to and hereby made a part of this bond as though herein set forth in full;

NOW, THEREFORE, the conditions of this obligation are such that if the Principal, his or its representatives or assigns, shall well and faithfully perform the said Contract and all modifications, amendments, additions and alterations thereto that may hereafter be made, according to its terms and its true intent and meaning, including repair and or replacement of defective work and guarantees of maintenance for the periods stated in the Contract, and shall fully indemnify and save harmless the City from all cost and damage which it may suffer by reason of the Principal's default of the Contract, and shall fully reimburse and repay the City for all outlay and expense which the City may incur in making

<u>Performance Bond #1 (Pages 92 to 95)</u>: Use if the total contract price is $5 Million Or Less. Performance Bond #1 has been approved by the U.S. Small Business Administration ("SBA") for participation in its Bond Guarantee Program.

good any such default and shall protect the said City of New York against, and pay any and all amounts, damages, cost and judgments which may or shall be recovered against said City or its officers or agents or which the said City of New York may be called upon to pay any person or corporation by reason of any damages arising or growing out of the Principal's default of the Contract, then this obligation shall be null and void, otherwise to remain in full force and effect.

The Surety (Sureties), for value received, hereby stipulates and agrees, upon written notice from the City that the City has determined that the Principal is in default of the Contract, to (1) pay the City the cost to complete the contract as determined by the City in excess of the balance of the Contract held by the City, plus any damages or costs to which the City is entitled, up to the full amount of the above penal sum, (2) fully perform and complete the Work to be performed under the Contract, pursuant to the terms, conditions, and covenants thereof, or (3) tender a completion Contractor that is acceptable to the City. The Surety (Sureties) further agrees, at its option, either to notify the City that it elects to pay the city the cost of completion plus any applicable damages and costs under option (1) above, or to commence and diligently perform the Work specified in the Contract, including physical site work, within twenty-five (25) business days after written notice thereof from the City and, if the Surety elects to fully perform and complete the Work, then to complete all Work within the time set forth in the Contract or such other time as agreed to between the City and Surety in accordance with the Contract. If the Surety elects to tender payment pursuant to (1) above, then the Surety shall tender such amount within fifteen (15) business days notification from the City of the cost of completion. The Surety and the City reserve all rights and defenses each may have against the other; provided, however, that the Surety expressly agrees that its reservation of rights shall not provide a basis for non-performance of its obligation to pay the City the cost of completion, to commence and complete all Work as provided herein, or to tender a completion contractor.

The Surety (Sureties), for value received, for itself and its successors and assigns, hereby stipulates and agrees that the obligation of said Surety (Sureties) and its bond shall be in no way impaired or affected by any extension of time, modification, omission, addition, or change in or to the said Contract or the Work to be performed thereunder, or by any payment thereunder before the time required therein, or by any waiver of any provisions thereof, or any moneys due or to become due thereunder; and said Surety (Sureties) does hereby waive notice of any and all of such extensions, modifications, omissions, additions, changes, payments, and waivers, and hereby expressly stipulates and agrees that any and all things done and omitted to be done by and in relation to subcontractors shall have the same effect as to said Surety (Sureties) as though done or omitted to be done by or in relation to said Principal. Notwithstanding the above, if the City makes payments to the Principal before the time required by the contract that in the aggregate exceed $100,000 or 10% of the Contract price, whichever is less, and that have not become earned prior to the Principal being found to be in default, then all payments made to the Principal before the time required by the Contract shall be added to the remaining contract value available to be paid for the completion of the Contract as if such sums had not been paid to the Principal, but shall not provide a basis for non-performance of its obligation to pay the City the cost of completion, to commence and to complete all Work as provided herein, or to tender a completion contractor.

<u>Performance Bond #1 (Pages 92 to 95)</u>: Use if the total contract price is $5 Million Or Less. Performance Bond #1 has been approved by the U.S. Small Business Administration ("SBA") for participation in its Bond Guarantee Program.

IN WITNESS WHEREOF, The Principal and the Surety (Sureties) have hereunto set their hands and seals, and such of them as are corporations have caused their corporate seals to be hereunto affixed and these presents to be signed by their proper officers, this

_____ day of _____, 20_____.

(Seal)

_____(L.S.)
Principal

By:_____.

(Seal)

Surety

By:_____.
_____.

(Seal)

Surety

By:_____.
_____.

(Seal)

Surety

By:_____.
_____.

(Seal)

Surety

By:_____.
_____.

(Seal)

Surety

By:_____.

Bond Premium Rate _____.

Bond Premium Cost _____.

If the Contractor (Principal) is a partnership, the bond should be signed by each of the individuals who are partners.

If the Contractor (Principal) is a corporation, the bond should be signed in its correct corporate name by a duly authorized officer, agent, or attorney-in-fact.

There should be executed an appropriate number of counterparts of the bond corresponding to the number of counterparts of the Contract.

Performance Bond #1 (Pages 92 to 95): Use if the total contract price is $5 Million Or Less. Performance Bond #1 has been approved by the U.S. Small Business Administration ("SBA") for participation in its Bond Guarantee Program.

ACKNOWLEDGMENT OF PRINCIPAL IF A CORPORATION

State of _____ County of _____ ss:

On this _____ day of _____, 20_____ before me personally came _____,
to me known, who, being by me duly sworn did depose and say that he/she resides at _____
_____; that he/she is the _____
of the corporation described in and which executed the foregoing instrument; and that he/she signed his/her name to the foregoing instrument by order of the directors of said corporation as the duly authorized and binding act thereof.

_____
Notary Public or Commissioner of Deeds.

ACKNOWLEDGMENT OF PRINCIPAL IF A PARTNERSHIP

State of _____ County of _____ ss:

On this _____ day of _____, 20 _____ before me personally came _____,
to me known, who, being by me duly sworn did dispose and say that he/she resides at _____
_____; that he/she is _____ partner of
_____, a limited/general partnership existing under the laws of the State of
_____, the partnership described in and which executed the foregoing instrument;
and that he/she signed his/her name to the foregoing instrument as the duly authorized and binding act of said partnership.

_____
Notary Public or Commissioner of Deeds.

ACKNOWLEDGMENT OF PRINCIPAL IF AN INDIVIDUAL

State of _____ County of _____ ss:

On this _____ day of _____, 20_____ before me personally came _____,
to me known, who,.being by me duly sworn did depose and say that he/she resides at _____
_____, and that he/she is the individual whose name is subscribed to the within instrument and acknowledged to me that by his/her signature on the instrument, said individual executed the instrument.

_____
Notary Public or Commissioner of Deeds

Each executed bond should be accompanied by: (a) appropriate acknowledgments of the respective parties; (b) appropriate duly certified copy of Power of Attorney or other certificate of authority where bond is executed by agent, officer or other representative of Principal or Surety; (c) a duly certified extract from By-Laws or resolutions of Surety under which Power of Attorney or other certificate of authority of its agent, officer or representative was issued, and (d) certified copy of latest published financial statement of assets and liabilities of Surety.

* * * * * * * *

Affix Acknowledgments and Justification of Sureties.

Performance Bond #2 (Pages 94 to 97): Use if the total contract price is more than $5 Million.

PERFORMANCE BOND #2

KNOW ALL PERSONS BY THESE PRESENTS, That we,

HALCYON CONSTRUCTION CORPORATION

65 MARBLE AVENUE

PLEASANTVILLE, NY 10570

hereinafter referred to as the "Principal", and

Travelers Casualty and Surety Company of America

One Tower Square

Hartford, CT 06183

hereinafter referred to as the "Surety" ("Sureties") are held and firmly bound to THE CITY OF NEW YORK, hereinafter referred to as the "City" or to its successors and assigns, in the penal sum of

Twenty Two Million One Hundred Ninety Thousand Dollars and 00/100

($ 22,190,000.00) Dollars, lawful money of the United States, for the payment of which said sum of money well and truly to be made, we, and each of us, bind ourselves, our heirs, executors, administrators, successors and assigns, jointly and severally, firmly by these presents.

WHEREAS, the Principal is about to enter, or has entered, into a Contract in writing with the City for

FMS ID: QED-1014 DDC PIN: 8502016WM0005C - REHABILITATION OF EXISTING TRUNK WATER MAINS IN CRESCENT STREET/QUEENS

a copy of which Contract is annexed to and hereby made a part of this bond as though herein set forth in full;

NOW, THEREFORE, the conditions of this obligation are such that if the Principal, his or its representatives or assigns, shall well and faithfully perform the said Contract and all modifications, amendments, additions and alterations thereto that may hereafter be made, according to its terms and its true intent and meaning, including repair and or replacement of defective work and guarantees of maintenance for the periods stated in the Contract, and shall fully indemnify and save harmless the City from all cost and damage which it may suffer by reason of the Principal's default of the Contract, and shall fully reimburse and repay the City for all outlay and expense which the City may incur in making good any such default and shall protect the said City of New York against, and pay any and all amounts, damages, cost and judgments which may or shall be recovered against said City or its officers or agents or which the said City of New York may be called upon to pay any person or corporation by reason of any damages arising or growing out of the Principal's default of the Contract, then this obligation shall be null and void, otherwise to remain in full force and effect.

The Surety (Sureties), for value received, hereby stipulates and agrees, upon written notice from the City that the City has determined that the Principal is in default of the Contract, to either (1) pay the full amount of the above penal sum in complete discharge and exoneration of this bond and of all the liabilities of the Surety relating to this bond, or (2) fully perform and complete the Work to be performed under the Contract, pursuant to the terms, conditions, and covenants thereof. The Surety (Sureties) further agrees, at its option, either to tender the penal sum or to commence and diligently perform the Work specified in the Contract, including physical site work, within twenty-five (25) business days after written notice thereof from the City and to complete all Work within the time set forth in the Contract or such other time as agreed to between the City and Surety in accordance with the Contract. The Surety and the City reserve all rights and defenses each may have against the other; provided, however, that the Surety expressly agrees that its reservation of rights shall not provide a basis for non-performance of its obligation to commence and to complete all Work as provided herein.

The Surety (Sureties), for value received, for itself and its successors and assigns, hereby stipulates and agrees that the obligation of said Surety (Sureties) and its bond shall be in no way impaired or affected by any extension of time, modification, omission, addition, or change in or to the said Contract or the Work to be performed thereunder, or by any payment thereunder before the time required therein, or by any waiver of any provisions thereof, or by any assignment, subletting or other transfer thereof or of any Work to be performed or any moneys due or to become due thereunder; and said Surety (Sureties) does hereby waive notice of any and all of such extensions, modifications, omissions, additions, changes, payments, waivers, assignments, subcontracts and transfers, and hereby expressly stipulates and agrees that any and all things done and omitted to be done by and in relation to assignees, subcontractors, and other transferees shall have the same effect as to said Surety (Sureties) as though done or omitted to be done by or in relation to said Principal.

IN WITNESS WHEREOF, the Principal and the Surety (Sureties) have hereunto set their hands and seals, and such of them as are corporations have caused their corporate seals to be hereunto affixed and these presents to be signed by their proper officers, this 11th day of November, 2016.

(Seal)

HALCYON CONSTRUCTION CORPORATION (L.S.)
Principal

By:

(Seal)

Travelers Casualty and Surety Company of America
Surety

By:
William D. Haas, Attorney-in-Fact

(Seal)

Surety

By:

(Seal)

Surety

By:

(Seal)

Surety

By:

(Seal)

Surety

Bond Premium Rate $13.50 slide

Bond Premium Cost $177,810.00

If the Contractor (Principal) is a partnership, the bond should be signed by each of the individuals who are partners.

If the Contractor (Principal) is a corporation, the bond should be signed in its correct corporate name by a duly authorized officer, agent, or attorney-in-fact.

There should be executed an appropriate number of counterparts of the bond corresponding to the number of counterparts of the Contract.

Performance Bond #2 (Pages 94 to 97):. Use if the total contract price is more than $5 Million.

ACKNOWLEDGMENT OF PRINCIPAL, IF A CORPORATION

State of New York County of Westchester ss:

On this 11th day of Nov, 2016 before me personally came Charles Casanella to me known, who, being by me duly sworn did depose and say that he/she resides at Pound Ridge NY; that he/she is the President of Halcyon Construction the corporation described in and which executed the foregoing instrument; and that he signed his name to the foregoing instrument by order of the directors of said corporation as the duly authorized and binding act thereof.

Notary Public or Commissioner of Deeds

MARIA DIOGUARDI
Notary Public, State of New York
No. 01-DI6234276
Qualified in Westchester County
Commission Expires Jan 18, 2019

ACKNOWLEDGMENT OF PRINCIPAL, IF A PARTNERSHIP

State of _____ County of _____ ss:

On this _____ day of _____, _____ before me personally came _____ to me known, who, being by me duly sworn did depose and say that he/she resides at _____ _____; that he/she is _____ partner of _____, a limited/general partnership existing under the laws of the State of _____, the partnership described in and which executed the foregoing instrument; and that he/she signed his/her name to the foregoing instrument as the duly authorized and binding act of said partnership.

_____
Notary Public or Commissioner of Deeds

ACKNOWLEDGMENT OF PRINCIPAL, IF AN INDIVIDUAL

State of _____ County of _____ ss:

On this _____ day of _____, _____ before me personally came _____ to me known, who, being by me duly sworn did depose and say that he/she resides at _____ _____, and that he/she is the individual whose name is subscribed to the within instrument and acknowledged to me that by his/her signature on the instrument, said individual executed the instrument.

_____
Notary Public or Commissioner of Deeds

Each executed bond should be accompanied by: (a) appropriate acknowledgments of the respective parties; (b) appropriate duly certified copy of Power of Attorney or other certificate of authority where bond is executed by agent, officer or other representative of Principal or Surety; (c) a duly certified extract from By-Laws or resolutions of Surety under which Power of Attorney or other certificate of authority of its agent, officer or representative was issued, and (d) certified copy of latest published financial statement of assets and liabilities of Surety.

* * * * * * * *

Affix Acknowledgments and Justification of Sureties.

ACKNOWLEDGMENT OF SURETY COMPANY

STATE OF NEW YORK
COUNTY OF WESTCHESTER } ss

On this November 11, 2016, before me personally came William D. Haas

to me known, who, being by me duly sworn, did depose and say; that he/she resides in

RYE, NEW YORK; that he/she is the Attorney-in-Fact of the Travelers Casualty and Surety Company of America the corporation described in which executed the above instrument; that he/she knows the seal of said corporation; that the seal affixed to said instrument is such corporate seal; that is was so affixed by the Board of Directors of said corporation; and that he/she signed his/her name thereto by like order; and the affiant did further depose and say that the Superintendent of Insurance of the State of New York, has, pursuant to Section 1111 of the Insurance Law of the State of New York, issued to William D. Haas his/her certificate of qualification evidencing the qualification of said Company and its sufficiency under any law of the State of New York as surety and guarantor, and the propriety of accepting and approving it as such; and that such certificate has not been revoked.

Alice McCarthy

ALICE MCCARTHY Notary Public

WESTCHESTER
Notary Public County

June 2, 2019
Notary Public Commission Expiration Date

ALICE McCARTHY
NOTARY PUBLIC, State of New York
No. 01MC5079342
Qualified in Dutchess County
Commission Expires June 02, 2019

TRAVELERS CASUALTY AND SURETY COMPANY OF AMERICA

HARTFORD, CONNECTICUT 06183

FINANCIAL STATEMENT AS OF JUNE 30, 2015

CAPITAL STOCK $ 6,490,000

ASSETS		LIABILITIES & SURPLUS	
BONDS	$ 3,827,873,408	UNEARNED PREMIUMS	$ 863,748
STOCKS	301,331,612	LOSSES	727,287
PREMIUM BALANCES	226,639,742	LOSS ADJUSTMENT EXPENSES	321,760
CASH AND INVESTED CASH	123,229,908	COMMISSIONS	23,559
INVESTMENT INCOME DUE AND ACCRUED	43,918,048	TAXES, LICENSES AND FEES	10,726
OTHER INVESTED ASSETS	3,803,776	OTHER EXPENSES	25,469
NET DEFERRED TAX ASSET	62,114,189	CURRENT FEDERAL AND FOREIGN INCOME TAXES	13,668
REINSURANCE RECOVERABLE	12,370,983	REMITTANCES AND ITEMS NOT ALLOCATED	26,204
SECURITIES LENDING REINVESTED COLLATERAL ASSETS	21,944,174	AMOUNTS WITHHELD / RETAINED BY COMPANY FOR OTHERS	36,220
RECEIVABLES FROM PARENT, SUBSIDIARIES AND AFFILIATES	27,637,328	RETROACTIVE REINSURANCE RESERVE ASSUMED	880
RECEIVABLE FOR SECURITIES	4,707,641	POLICYHOLDER DIVIDENDS	8,044
OTHER ASSETS	3,202,819	PROVISION FOR REINSURANCE	3,418
		ADVANCE PREMIUM	1,183
		PAYABLE FOR SECURITIES LENDING	21,944
		PAYABLE FOR SECURITIES	39,054
		CEDED REINSURANCE NET PREMIUMS PAYABLE	39,444
		ESCHEAT LIABILITY	832
		OTHER ACCRUED EXPENSES AND LIABILITIES	483
		TOTAL LIABILITIES	$ 2,161,806
		CAPITAL STOCK	$ 6,490
		PAID IN SURPLUS	433,803
		OTHER SURPLUS	1,856,574
		TOTAL SURPLUS TO POLICYHOLDERS	$ 2,296,868
TOTAL ASSETS	$ 4,458,664,626	TOTAL LIABILITIES & SURPLUS	$ 4,458,664

STATE OF CONNECTICUT)

COUNTY OF HARTFORD) SS.

CITY OF HARTFORD)

MICHAEL J. DOODY, BEING DULY SWORN, SAYS THAT HE IS SECOND VICE PRESIDENT, OF TRAVELERS CASUALTY AND SURETY COMPANY OF AMERICA, AND THAT TO THE BEST OF HIS KNOWLEDGE AND BELIEF, THE FOREGOING IS A TRUE AND CORRECT STATEMENT OF THE FINANCIAL CONDITION OF SAID COMPANY AS OF THE 30TH DAY OF JUNE, 2015.

Michael J Doody
SECOND VICE PRESIDENT

SUBSCRIBED AND SWORN TO BEFORE ME THIS
20TH DAY OF AUGUST, 2015

Susan M. Weissleder
NOTARY PUBLIC

SUSAN M. WEISSLEDER
Notary Public
My Commission Expires November 30, 2017

SUSAN M. WEISSLEDER NOTARY PUBLIC CONNECTICUT

TRAVELERS

POWER OF ATTORNEY

Farmington Casualty Company
Fidelity and Guaranty Insurance Company
Fidelity and Guaranty Insurance Underwriters, Inc.
St. Paul Fire and Marine Insurance Company
St. Paul Guardian Insurance Company

St. Paul Mercury Insurance Company
Travelers Casualty and Surety Company
Travelers Casualty and Surety Company of America
United States Fidelity and Guaranty Company

Surety Bond No. 106530861

OR

Project Description: FMS ID: QED-1014 DDC PIN: 8502016WM0005C - REHABILITATION OF EXISTING TRUNK WATER MAINS IN CRESCENT STREET/QUEENS

Principal: HALCYON CONSTRUCTION CORPORATION

Obligee: The City of New York

KNOW ALL MEN BY THESE PRESENTS: That Farmington Casualty Company, St. Paul Fire and Marine Insurance Company, St. Paul Guardian Insurance Company, St. Paul Mercury Insurance Company, Travelers Casualty and Surety Company, Travelers Casualty and Surety Company of America, and United States Fidelity and Guaranty Company, are corporations duly organized under the laws of the State of Connecticut, that Fidelity and Guaranty Insurance Company is a corporation duly organized under the laws of the State of Iowa, and that Fidelity and Guaranty Insurance Underwriters, Inc. is a corporation duly organized under the laws of the State of Wisconsin (herein collectively called the "Companies"), and that the Companies do hereby make, constitute and appoint **William D. Haas** of the City of **White Plains**, State of **NY**, their true and lawful Attorney-in-Fact, to sign, execute, seal and acknowledge the surety bond(s) referenced above.

IN WITNESS WHEREOF, the Companies have caused this instrument to be signed and their corporate seals to be hereto affixed, this **24th** day of **June, 2016**.

Farmington Casualty Company
Fidelity and Guaranty Insurance Company
Fidelity and Guaranty Insurance Underwriters, Inc.
St. Paul Fire and Marine Insurance Company
St. Paul Guardian Insurance Company

St. Paul Mercury Insurance Company
Travelers Casualty and Surety Company
Travelers Casualty and Surety Company of America
United States Fidelity and Guaranty Company

State of Connecticut

City of Hartford ss.

By: Robert L. Raney, Senior Vice President

On this the **24th** day of **June, 2016**, before me personally appeared **Robert L. Raney**, who acknowledged himself to be the Senior Vice President of Farmington Casualty Company, Fidelity and Guaranty Insurance Company, Fidelity and Guaranty Insurance Underwriters, Inc., St. Paul Fire and Marine Insurance Company, St. Paul Guardian Insurance Company, St. Paul Mercury Insurance Company, Travelers Casualty and Surety Company, Travelers Casualty and Surety Company of America, and United States Fidelity and Guaranty Company, and that he, as such, being authorized so to do, executed the foregoing instrument for the purposes therein contained by signing on behalf of the corporations by himself as a duly authorized officer.

In Witness Whereof, I hereunto set my hand and official seal.

My Commission expires the **30th** day of **June, 2021.**

Marie C. Tetreault, Notary Public

This Power of Attorney is granted under and by the authority of the following resolutions adopted by the Boards of Directors of Farmington Casualty Company, Fidelity and Guaranty Insurance Company, Fidelity and Guaranty Insurance Underwriters, Inc., St. Paul Fire and Marine Insurance Company, St. Paul Guardian Insurance Company, St. Paul Mercury Insurance Company, Travelers Casualty and Surety Company, Travelers Casualty and Surety Company of America, and United States Fidelity and Guaranty Company, which resolutions are now in full force and effect, reading as follows:

RESOLVED, that the Chairman, the President, any Vice Chairman, any Executive Vice President, any Senior Vice President, any Vice President, any Second Vice President, the Treasurer, any Assistant Treasurer, the Corporate Secretary or any Assistant Secretary may appoint Attorneys-in-Fact and Agents to act for and on behalf of the Company and may give such appointee such authority as his or her certificate of authority may prescribe to sign with the Company's name and seal with the Company's seal bonds, recognizances, contracts of indemnity, and other writings obligatory in the nature of a bond, recognizance, or conditional undertaking, and any of said officers or the Board of Directors at any time may remove any such appointee and revoke the power given him or her; and it is

FURTHER RESOLVED, that the Chairman, the President, any Vice Chairman, any Executive Vice President, any Senior Vice President or any Vice President may delegate all or any part of the foregoing authority to one or more officers or employees of this Company, provided that each such delegation is in writing and a copy thereof is filed in the office of the Secretary; and it is

FURTHER RESOLVED, that any bond, recognizance, contract of indemnity, or writing obligatory in the nature of a bond, recognizance, or conditional undertaking shall be valid and binding upon the Company when (a) signed by the President, any Vice Chairman, any Executive Vice President, any Senior Vice President or any Vice President, any Second Vice President, the Treasurer, any Assistant Treasurer, the Corporate Secretary or any Assistant Secretary and duly attested and sealed with the Company's seal by a Secretary or Assistant Secretary; or (b) duly executed (under seal, if required) by one or more Attorneys-in-Fact and Agents pursuant to the power prescribed in his or her certificate or their certificates of authority or by one or more Company officers pursuant to a written delegation of authority; and it is

FURTHER RESOLVED, that the signature of each of the following officers: President, any Executive Vice President, any Senior Vice President, any Vice President, any Assistant Vice President, any Secretary, any Assistant Secretary, and the seal of the Company may be affixed by facsimile to any Power of Attorney or to any certificate relating thereto appointing Resident Vice Presidents, Resident Assistant Secretaries or Attorneys-in-Fact for purposes only of executing and attesting bonds and undertakings and other writings obligatory in the nature thereof, and any such Power of Attorney or certificate bearing such facsimile signature or facsimile seal shall be valid and binding upon the Company and any such power so executed and certified by such facsimile signature and facsimile seal shall be valid and binding on the Company in the future with respect to any bond or understanding to which it is attached.

I, Kevin E. Hughes, the undersigned, Assistant Secretary, of Farmington Casualty Company, Fidelity and Guaranty Insurance Company, Fidelity and Guaranty Insurance Underwriters, Inc., St. Paul Fire and Marine Insurance Company, St. Paul Guardian Insurance Company, St. Paul Mercury Insurance Company, Travelers Casualty and Surety Company, Travelers Casualty and Surety Company of America, and United States Fidelity and Guaranty Company, do hereby certify that the above and foregoing is a true and correct copy of the Power of Attorney executed by said Companies, which is in full force and effect and has not been revoked.

IN TESTIMONY WHEREOF, I have hereunto set my hand and affixed the seals of said Companies this 11th day of November, 2016.

Kevin E. Hughes, Assistant Secretary

To verify the authenticity of this Power of Attorney, call 1-800-421-3880 or contact us at www.travelersbond.com. Please refer to the Attorney-In-Fact number, the above-named individuals and the details of the bond to which the power is attached.

Payment Bond (Pages 98 to 101): Use for any contract for which a Payment Bond is required.

PAYMENT BOND

KNOW ALL PERSONS BY THESE PRESENTS, That we,

HALCYON CONSTRUCTION CORPORATION

65 MARBLE AVENUE

PLEASANTVILLE, NY 10570

hereinafter referred to as the "Principal", and

Travelers Casualty and Surety Company of America

One Tower Square

Hartford, CT 06183

hereinafter referred to as the "Surety" ("Sureties") are held and firmly bound to THE CITY OF NEW YORK, hereinafter referred to as the "City" or to its successors and assigns, in the penal sum of

Twenty Two Million One Hundred Ninety Thousand Dollars and 00/100

($ 22,190,000.00) Dollars, lawful money of the United States, for the payment of which said sum of money well and truly to be made, we, and each of us, bind ourselves, our heirs, executors, administrators, successors and assigns, jointly and severally, firmly by these presents.

WHEREAS, the Principal is about to enter, or has entered, into a Contract in writing with the City for

FMS ID: QED-1014 DDC PIN: 8502016WM0005C - REHABILITATION OF EXISTING TRUNK WATER MAINS IN CRESCENT STREET/QUEENS

a copy of which Contract is annexed to and hereby made a part of this bond as though herein set forth in full;

NOW, THEREFORE, the conditions of this obligation are such that if the Principal, his or its representatives or assigns and other Subcontractors to whom Work under this Contract is sublet and his or their successors and assigns shall promptly pay or cause to be paid all lawful claims for

(a) Wages and compensation for labor performed and services rendered by all persons engaged in the prosecution of the Work under said Contract, and any amendment or extension thereof or addition thereto, whether such persons be agents servants or employees of the Principal or any such Subcontractor, including all persons so

engaged who perform the work of laborers or mechanics at or in the vicinity of the site of the Project regardless of any contractual relationship between the Principal or such Subcontractors, or his or their successors or assigns, on the one hand and such laborers or mechanics on the other, but not including office employees not regularly stationed at the site of the project; and

(b) Materials and supplies (whether incorporated in the permanent structure or not), as well as teams, fuels, oils, implements or machinery furnished, used or consumed by said Principal or any subcontractor at or in the vicinity of the site of the Project in the prosecution of the Work under said Contract and any amendment or extension thereof or addition thereto; then this obligation shall be void, otherwise to remain in full force and effect.

This bond is subject to the following additional conditions, limitations and agreements:

(a) The Principal and Surety (Sureties) agree that this bond shall be for the benefit of any materialmen or laborer having a just claim, as well as the City itself.

(b) All persons who have performed labor, rendered services or furnished materials and supplies, as aforesaid, shall have a direct right of action against the Principal and his, its or their successors and assigns, and the Surety (Sureties) herein, or against either or both or any of them and their successors and assigns. Such persons may sue in their own name, and may prosecute the suit to judgment and execution without the necessity of joining with any other persons as party plaintiff.

(c) The Principal and Surety (Sureties) agree that neither of them will hold the City liable for any judgment for costs of otherwise, obtained by either or both of them against a laborer or materialman in a suit brought by either a laborer or materialman under this bond for moneys allegedly due for performing work or furnishing material.

(d) The Surety (Sureties) or its successors and assigns shall not be liable for any compensation recoverable by an employee or laborer under the Workmen's Compensation Law.

(e) In no event shall the Surety (Sureties), or its successors or assigns; be liable for a greater sum than the penalty of this bond or be subject to any suit, action or proceeding hereon that is instituted by any person, firm, or corporation hereunder later than two years after the complete performance of said Contract and final settlement thereof.

The Principal, for himself and his successors and assigns, and the Surety (Sureties), for itself and its successors and assigns, do hereby expressly waive any objection that might be interposed as to the right of the City to require a bond containing the foregoing provisions, and they do hereby further expressly waive any defense which they or either of them might interpose to an action brought hereon by any person, firm or corporation, including subcontractors, materialmen and third persons, for work, labor, services, supplies or material performed rendered, or furnished as aforesaid upon the ground that there is no law authorizing the City to require the foregoing provisions to be placed in this bond.

And the Surety (Sureties), for value received, for itself and its successors and assigns, hereby stipulates and agrees that the obligation of said Surety (Sureties), and its bonds shall be in no way impaired or affected by any extension of time, modification, omission, addition, or change in or of the said Contract or the work to be performed thereunder, or by any payment thereunder before the time required therein, or by any waiver of any provisions thereof, or by any assignment, subletting or other transfer thereof or of any part thereof, or of any Work to be performed, or any moneys due to become due thereunder and said Surety (Sureties) does hereby waive notice of any and all of such extensions, modifications, omissions, additions, changes, payments,waivers, assignments, subcontracts and transfers, and hereby expressly stipulates and agrees that any and all things done and omitted to be done by and in relation to assignees, Subcontractors, and other transferees shall have the same effect as to said Surety (Sureties) as though done or omitted to be done or in relation to said Principal.

IN WITNESS HEREOF, the Principal and the Surety (Sureties) have hereunto set their hands and seals, and such of them as are corporations have caused their corporate seals to be hereunto affixed and these presents to be signed by their proper officers, this 11th day of November, 2016.

(Seal)

HALCYON CONSTRUCTION CORPORATION (L.S.)
Principal

By: _____

(Seal)

Travelers Casualty and Surety Company of America
Surety

By: _____
William D. Haas, Attorney-in-Fact

TRAVELERS CASUALTY AND SURETY COMPANY OF AMERICA
HARTFORD, CONN.

(Seal)

_____
Surety

By: _____

(Seal)

_____
Surety

By: _____

(Seal)

_____
Surety

By: _____

If the Contractor (Principal) is a partnership, the bond should be signed by each of the individuals who are partners.

If the Contractor (Principal) is a corporation, the bond should be signed in its correct corporate name by a duly authorized officer, agent, or attorney-in-fact.

There should be executed an appropriate number of counterparts of the bond corresponding to the number of counterparts of the Contract.

ACKNOWLEDGMENT OF PRINCIPAL, IF A CORPORATION

State of New York County of Westchester ss:

On this 11th day of Nov 2016 before me personally came Charles Casanella to me known, who, being by me duly sworn did depose and say that he resides at Pound Ridge NY that he is the President of the corporation described in and which executed the foregoing instrument; that he knows the seal of said corporation; that one of the seals affixed to said instrument is such seal; that it was so affixed by order of the directors of said corporation, and that he signed his name thereto by like order.

Notary Public or Commissioner of Deeds

MARIA DIOGUARDI
Notary Public, State of New York
No. 01-DI6234276
Qualified in Westchester County
Commission Expires Jan 18, 2019

ACKNOWLEDGMENT OF PRINCIPAL, IF A PARTNERSHIP

State of _____ County of _____ ss:

On this _____ day of _____, _____ before me personally appeared _____

_____ to me known, and known to me to be one of the members of the firm of

_____ described in and who executed the foregoing instrument; and he acknowledged to me that he executed the same as and for the act and deed of said firm.

Notary Public or Commissioner of Deeds

ACKNOWLEDGMENT OF PRINCIPAL, IF AN INDIVIDUAL

State of _____ County of _____ ss:

On this _____ day of _____, _____ before me personally appeared _____

to me known, and known to me to be the person described in and who executed the foregoing instrument; and acknowledged that he executed the same.

Notary Public or Commissioner of Deeds

Each executed bond should be accompanied by: (a) appropriate acknowledgments of the respective parties; (b) appropriate duly certified copy of Power of Attorney or other certificate of authority where bond is executed by agent, officer or other representative of Principal or Surety; (c) a duly certified extract from By-Laws or resolutions of Surety under which Power of Attorney or other certificate of authority of its agent, officer or representative was issued, and (d) certified copy of latest published financial statement of assets and liabilities of Surety.

* * * * * * * *

Affix Acknowledgments and Justification of Sureties

ACKNOWLEDGMENT OF SURETY COMPANY

STATE OF NEW YORK
COUNTY OF WESTCHESTER } ss

On this November 11, 2016, before me personally came William D. Haas

to me known, who, being by me duly sworn, did depose and say; that he/she resides in

RYE, NEW YORK; that he/she is the Attorney-in-Fact of the Travelers Casualty and Surety Company of America the corporation described in which executed the above instrument; that he/she knows the seal of said corporation; that the seal affixed to said instrument is such corporate seal; that is was so affixed by the Board of Directors of said corporation; and that he/she signed his/her name thereto by like order; and the affiant did further depose and say that the Superintendent of Insurance of the State of New York, has, pursuant to Section 1111 of the Insurance Law of the State of New York, issued to William D. Haas his/her certificate of qualification evidencing the qualification of said Company and its sufficiency under any law of the State of New York as surety and guarantor, and the propriety of accepting and approving it as such; and that such certificate has not been revoked.

Alice McCarthy

ALICE MCCARTHY Notary Public

WESTCHESTER
Notary Public County

June 2, 2019
Notary Public Commission Expiration Date

ALICE McCARTHY
NOTARY PUBLIC, State of New York
No. 01MC5079342
Qualified in Dutchess County
Commission Expires June 02, 2019

TRAVELERS CASUALTY AND SURETY COMPANY OF AMERICA

HARTFORD, CONNECTICUT 06183

FINANCIAL STATEMENT AS OF JUNE 30, 2015

CAPITAL STOCK $ 6,490,000

ASSETS	
BONDS	$ 3,627,873,408
STOCKS	301,331,612
PREMIUM BALANCES	226,839,742
CASH AND INVESTED CASH	123,229,908
INVESTMENT INCOME DUE AND ACCRUED	43,918,048
OTHER INVESTED ASSETS	3,803,776
NET DEFERRED TAX ASSET	62,114,169
REINSURANCE RECOVERABLE	12,370,983
SECURITIES LENDING REINVESTED COLLATERAL ASSETS	21,844,174
RECEIVABLES FROM PARENT, SUBSIDIARIES AND AFFILIATES	27,637,328
RECEIVABLE FOR SECURITIES	4,707,641
OTHER ASSETS	3,202,819
TOTAL ASSETS	$ 4,458,864,628

LIABILITIES & SURPLUS	
UNEARNED PREMIUMS	$ 863,748
LOSSES	727,287
LOSS ADJUSTMENT EXPENSES	321,760
COMMISSIONS	23,559
TAXES, LICENSES AND FEES	10,728
OTHER EXPENSES	26,469
CURRENT FEDERAL AND FOREIGN INCOME TAXES	13,656
REMITTANCES AND ITEMS NOT ALLOCATED	26,204
AMOUNTS WITHHELD / RETAINED BY COMPANY FOR OTHERS	35,220
RETROACTIVE REINSURANCE RESERVE ASSUMED	880
POLICYHOLDER DIVIDENDS	8,044
PROVISION FOR REINSURANCE	3,416
ADVANCE PREMIUM	1,183
PAYABLE FOR SECURITIES LENDING	21,944
PAYABLE FOR SECURITIES	39,054
CEDED REINSURANCE NET PREMIUMS PAYABLE	39,444
ESCHEAT LIABILITY	832
OTHER ACCRUED EXPENSES AND LIABILITIES	483
TOTAL LIABILITIES	$ 2,161,806
CAPITAL STOCK	$ 6,490
PAID IN SURPLUS	433,803
OTHER SURPLUS	1,856,574
TOTAL SURPLUS TO POLICYHOLDERS	$ 2,296,858
TOTAL LIABILITIES & SURPLUS	$ 4,458,864

STATE OF CONNECTICUT)

COUNTY OF HARTFORD) SS.

CITY OF HARTFORD)

MICHAEL J. DOODY, BEING DULY SWORN, SAYS THAT HE IS SECOND VICE PRESIDENT, OF TRAVELERS CASUALTY AND SURETY COMPANY OF AMERICA, AND THAT TO THE BEST OF HIS KNOWLEDGE AND BELIEF, THE FOREGOING IS A TRUE AND CORRECT STATEMENT OF THE FINANCIAL CONDITION OF SAID COMPANY AS OF THE 30TH DAY OF JUNE, 2015.

Michael J Doody

SECOND VICE PRESIDENT

SUBSCRIBED AND SWORN TO BEFORE ME THIS
20TH DAY OF AUGUST, 2015

Susan M. Weissleder

NOTARY PUBLIC

SUSAN M. WEISSLEDER
Notary Public
My Commission Expires November 30, 2017

SUSAN M. WEISSLEDER NOTARY PUBLIC CONNECTICUT

TRAVELERS

POWER OF ATTORNEY

Farmington Casualty Company
Fidelity and Guaranty Insurance Company
Fidelity and Guaranty Insurance Underwriters, Inc.
St. Paul Fire and Marine Insurance Company
St. Paul Guardian Insurance Company

St. Paul Mercury Insurance Company
Travelers Casualty and Surety Company
Travelers Casualty and Surety Company of America
United States Fidelity and Guaranty Company

Surety Bond No. 106530861

OR

Principal: HALCYON CONSTRUCTION CORPORATION

Project Description: FMS ID: QED-1014 DDC PIN: 8502016WM0005C - REHABILITATION OF EXISTING TRUNK WATER MAINS IN CRESCENT STREET/QUEENS

Obligee: The City of New York

KNOW ALL MEN BY THESE PRESENTS: That Farmington Casualty Company, St. Paul Fire and Marine Insurance Company, St. Paul Guardian Insurance Company, St. Paul Mercury Insurance Company, Travelers Casualty and Surety Company, Travelers Casualty and Surety Company of America, and United States Fidelity and Guaranty Company, are corporations duly organized under the laws of the State of Connecticut, that Fidelity and Guaranty Insurance Company is a corporation duly organized under the laws of the State of Iowa, and that Fidelity and Guaranty Insurance Underwriters, Inc. is a corporation duly organized under the laws of the State of Wisconsin (herein collectively called the "Companies"), and that the Companies do hereby make, constitute and appoint **William D. Haas** of the City of **White Plains**, State of **NY**, their true and lawful Attorney-in-Fact, to sign, execute, seal and acknowledge the surety bond(s) referenced above.

IN WITNESS WHEREOF, the Companies have caused this instrument to be signed and their corporate seals to be hereto affixed, this **24th** day of **June, 2016**.

Farmington Casualty Company
Fidelity and Guaranty Insurance Company
Fidelity and Guaranty Insurance Underwriters, Inc.
St. Paul Fire and Marine Insurance Company
St. Paul Guardian Insurance Company

St. Paul Mercury Insurance Company
Travelers Casualty and Surety Company
Travelers Casualty and Surety Company of America
United States Fidelity and Guaranty Company

State of Connecticut

City of Hartford ss.

By: _____
Robert L. Raney, Senior Vice President

On this the **24th** day of **June, 2016**, before me personally appeared **Robert L. Raney**, who acknowledged himself to be the Senior Vice President of Farmington Casualty Company, Fidelity and Guaranty Insurance Company, Fidelity and Guaranty Insurance Underwriters, Inc., St. Paul Fire and Marine Insurance Company, St. Paul Guardian Insurance Company, St. Paul Mercury Insurance Company, Travelers Casualty and Surety Company, Travelers Casualty and Surety Company of America, and United States Fidelity and Guaranty Company, and that he, as such, being authorized so to do, executed the foregoing instrument for the purposes therein contained by signing on behalf of the corporations by himself as a duly authorized officer.

In Witness Whereof, I hereunto set my hand and official seal.

My Commission expires the **30th** day of **June, 2021.**

Marie C. Tetreault, Notary Public

This Power of Attorney is granted under and by the authority of the following resolutions adopted by the Boards of Directors of Farmington Casualty Company, Fidelity and Guaranty Insurance Company, Fidelity and Guaranty Insurance Underwriters, Inc., St. Paul Fire and Marine Insurance Company, St. Paul Guardian Insurance Company, St. Paul Mercury Insurance Company, Travelers Casualty and Surety Company, Travelers Casualty and Surety Company of America, and United States Fidelity and Guaranty Company, which resolutions are now in full force and effect, reading as follows:

RESOLVED, that the Chairman, the President, any Vice Chairman, any Executive Vice President, any Senior Vice President, any Vice President, any Second Vice President, the Treasurer, any Assistant Treasurer, the Corporate Secretary or any Assistant Secretary may appoint Attorneys-in-Fact and Agents to act for and on behalf of the Company and may give such appointee such authority as his or her certificate of authority may prescribe to sign with the Company's name and seal with the Company's seal bonds, recognizances, contracts of indemnity, and other writings obligatory in the nature of a bond, recognizance, or conditional undertaking, and any of said officers or the Board of Directors at any time may remove any such appointee and revoke the power given him or her; and it is

FURTHER RESOLVED, that the Chairman, the President, any Vice Chairman, any Executive Vice President, any Senior Vice President or any Vice President may delegate all or any part of the foregoing authority to one or more officers or employees of this Company, provided that each such delegation is in writing and a copy thereof is filed in the office of the Secretary; and it is

FURTHER RESOLVED, that any bond, recognizance, contract of indemnity, or writing obligatory in the nature of a bond, recognizance, or conditional undertaking shall be valid and binding upon the Company when (a) signed by the President, any Vice Chairman, any Executive Vice President, any Senior Vice President or any Vice President, any Second Vice President, the Treasurer, any Assistant Treasurer, the Corporate Secretary or any Assistant Secretary and duly attested and sealed with the Company's seal by a Secretary or Assistant Secretary; or (b) duly executed (under seal, if required) by one or more Attorneys-in-Fact and Agents pursuant to the power prescribed in his or her certificate or their certificates of authority or by one or more Company officers pursuant to a written delegation of authority; and it is

FURTHER RESOLVED, that the signature of each of the following officers: President, any Executive Vice President, any Senior Vice President, any Vice President, any Assistant Vice President, any Secretary, any Assistant Secretary, and the seal of the Company may be affixed by facsimile to any Power of Attorney or to any certificate relating thereto appointing Resident Vice Presidents, Resident Assistant Secretaries or Attorneys-in-Fact for purposes only of executing and attesting bonds and undertakings and other writings obligatory in the nature thereof, and any such Power of Attorney or certificate bearing such facsimile signature or facsimile seal shall be valid and binding upon the Company and any such power so executed and certified by such facsimile signature and facsimile seal shall be valid and binding on the Company in the future with respect to any bond or understanding to which it is attached.

I, Kevin E. Hughes, the undersigned, Assistant Secretary, of Farmington Casualty Company, Fidelity and Guaranty Insurance Company, Fidelity and Guaranty Insurance Underwriters, Inc., St. Paul Fire and Marine Insurance Company, St. Paul Guardian Insurance Company, St. Paul Mercury Insurance Company, Travelers Casualty and Surety Company, Travelers Casualty and Surety Company of America, and United States Fidelity and Guaranty Company, do hereby certify that the above and foregoing is a true and correct copy of the Power of Attorney executed by said Companies, which is in full force and effect and has not been revoked.

IN TESTIMONY WHEREOF, I have hereunto set my hand and affixed the seals of said Companies this 11th day of November, 2016.

Kevin E. Hughes, Assistant Secretary

To verify the authenticity of this Power of Attorney, call 1-800-421-3880 or contact us at www.travelersbond.com. Please refer to the Attorney-In-Fact number, the above-named individuals and the details of the bond to which the power is attached.

ACORD®

CERTIFICATE OF LIABILITY INSURANCE

DATE (MM/DD/YYYY) 11/11/2016

THIS CERTIFICATE IS ISSUED AS A MATTER OF INFORMATION ONLY AND CONFERS NO RIGHTS UPON THE CERTIFICATE HOLDER. THIS CERTIFICATE DOES NOT AFFIRMATIVELY OR NEGATIVELY AMEND, EXTEND OR ALTER THE COVERAGE AFFORDED BY THE POLICIES BELOW. THIS CERTIFICATE OF INSURANCE DOES NOT CONSTITUTE A CONTRACT BETWEEN THE ISSUING INSURER(S), AUTHORIZED REPRESENTATIVE OR PRODUCER, AND THE CERTIFICATE HOLDER.

IMPORTANT: If the certificate holder is an ADDITIONAL INSURED, the policy(ies) must be endorsed. If SUBROGATION IS WAIVED, subject to the terms and conditions of the policy, certain policies may require an endorsement. A statement on this certificate does not confer rights to the certificate holder in lieu of such endorsement(s).

PRODUCER
Fairfield County Bank Insurance Services, LLC
401 Main Street
Ridgefield CT 06877

CONTACT NAME:
PHONE (A/C, No, Ext): 203-438-0404 FAX (A/C, No): 203-431-8789
E-MAIL ADDRESS: annmarie.spencer@fcbins.com

INSURER(S) AFFORDING COVERAGE	NAIC #
INSURER A : Star Indemnity & Liability Co.	38318
INSURER B : St. Paul Fire and Marine	24767
INSURER C : NAVIGATORS INS CO	42307
INSURER D :	
INSURER E :	
INSURER F :	

INSURED HALCCON-01
The Halcyon Construction Corp
65 Marble Avenue
Pleasantville NY 10570

COVERAGES **CERTIFICATE NUMBER:** 1533269375 **REVISION NUMBER:**

THIS IS TO CERTIFY THAT THE POLICIES OF INSURANCE LISTED BELOW HAVE BEEN ISSUED TO THE INSURED NAMED ABOVE FOR THE POLICY PERIOD INDICATED. NOTWITHSTANDING ANY REQUIREMENT, TERM OR CONDITION OF ANY CONTRACT OR OTHER DOCUMENT WITH RESPECT TO WHICH THIS CERTIFICATE MAY BE ISSUED OR MAY PERTAIN, THE INSURANCE AFFORDED BY THE POLICIES DESCRIBED HEREIN IS SUBJECT TO ALL THE TERMS, EXCLUSIONS AND CONDITIONS OF SUCH POLICIES. LIMITS SHOWN MAY HAVE BEEN REDUCED BY PAID CLAIMS.

INSR LTR	TYPE OF INSURANCE	ADDL INSD	SUBR WVD	POLICY NUMBER	POLICY EFF (MM/DD/YYYY)	POLICY EXP (MM/DD/YYYY)	LIMITS	
A	X COMMERCIAL GENERAL LIABILITY	Y	Y	1000025409151	7/1/2016	7/1/2017	EACH OCCURRENCE	$2,000,000
	[ ] CLAIMS-MADE [X] OCCUR						DAMAGE TO RENTED PREMISES (Ea occurrence)	$100,000
	X contractual liab						MED EXP (Any one person)	$5,000
	X Completed Ops						PERSONAL & ADV INJURY	$2,000,000
	GEN'L AGGREGATE LIMIT APPLIES PER:						GENERAL AGGREGATE	$4,000,000
	[ ] POLICY [X] PRO-JECT [ ] LOC						PRODUCTS - COMP/OP AGG	$4,000,000
	X OTHER: XCU Included							$
A	AUTOMOBILE LIABILITY	Y		SISIPCA08249915	7/1/2016	7/1/2017	COMBINED SINGLE LIMIT (Ea accident)	$1,000,000
	X ANY AUTO						BODILY INJURY (Per person)	$
	[ ] ALL OWNED AUTOS [ ] SCHEDULED AUTOS						BODILY INJURY (Per accident)	$
	X HIRED AUTOS [X] NON-OWNED AUTOS						PROPERTY DAMAGE (Per accident)	$
								$
A	[ ] UMBRELLA LIAB [X] OCCUR	Y		1000021896	7/1/2016	7/1/2017	EACH OCCURRENCE	$5,000,000
	X EXCESS LIAB [ ] CLAIMS-MADE						AGGREGATE	$5,000,000
	[ ] DED [X] RETENTION $ 10,000							$
	WORKERS COMPENSATION AND EMPLOYERS' LIABILITY						[ ] PER STATUTE [ ] OTH-ER	
	ANY PROPRIETOR/PARTNER/EXECUTIVE OFFICER/MEMBER EXCLUDED? (Mandatory in NH) Y/N [ ]	N/A					E.L. EACH ACCIDENT	$
	If yes, describe under DESCRIPTION OF OPERATIONS below						E.L. DISEASE - EA EMPLOYEE	$
							E.L. DISEASE - POLICY LIMIT	$
B C	Excess Liability Pollution Liability	Y		ZUP71M5883816NF NY15ECP0BAWFGNV	7/1/2016 7/1/2015	7/1/2017 7/1/2017	Limit Aggregate Limit./aggreg	10,000,000 10,000,000 5,000,000

DESCRIPTION OF OPERATIONS / LOCATIONS / VEHICLES (ACORD 101, Additional Remarks Schedule, may be attached if more space is required)

FMS ID #QED-1014 E-PIN #85016B0110001, DDC PIN 8502016WM0005C, Rehabilitation of Existing Trunk Water Mains in Crescent Street Borough of Queens
City of New York Including its officials and employees, The New York City Transit Authority (NYCTA), Manhattan and Bronx Surface Transit Operation Authority (MaBSTOA), Staten Island Rapid Transit Operation Authority (SIRTOA), Metropolitan transportation Authority (MTA), its subsidiaries and affiliated companies, Consolidated Edison Company of New York are included in blanket additional insured forms
See Attached...

CERTIFICATE HOLDER

New York Dept of Design and Construction
30-30 Thomson Avenue
Long Island City NY 11101

CANCELLATION

SHOULD ANY OF THE ABOVE DESCRIBED POLICIES BE CANCELLED BEFORE THE EXPIRATION DATE THEREOF, NOTICE WILL BE DELIVERED IN ACCORDANCE WITH THE POLICY PROVISIONS.

AUTHORIZED REPRESENTATIVE

AGENCY CUSTOMER ID: HALCCON-01

LOC #:

ADDITIONAL REMARKS SCHEDULE

AGENCY	NAMED INSURED
Fairfield County Bank Insurance Services, LLC	The Halcyon Construction Corp 65 Marble Avenue Pleasantville NY 10570
POLICY NUMBER	
CARRIER / NAIC CODE	EFFECTIVE DATE:

ADDITIONAL REMARKS

THIS ADDITIONAL REMARKS FORM IS A SCHEDULE TO ACORD FORM,

FORM NUMBER: 25 FORM TITLE: CERTIFICATE OF LIABILITY INSURANCE

CG2010 4/13 and CG2037 4/13 on GL and SICA1017 02/12 on Automobile additional insured per signed contract.

NEW YORK STATE | Workers' Compensation Board

CERTIFICATE OF INSURANCE COVERAGE UNDER THE NYS DISABILITY BENEFITS LAW

PART 1. To be completed by Disability Benefits Carrier or Licensed Insurance Agent of that Carrier

1a. Legal Name and Address of Insured (Use street address only) **THE HALCYON CONSTRUCTION CORP.** **65 MARBLE AVENUE** **PLEASANTVILLE, NY 10570** Work Location of Insured(*Only required if coverage is specifically limited to certain locations in New York State, i.e., a Wrap-Up Policy*)	1b. Business Telephone Number of Insured **914-741-1112** 1c. NYS Unemployment Insurance Employer Registration Number of Insured **6250551** 1d. Federal Employer Identification Number of Insured or Social Security Number **132995431**
2. Name and Address of the Entity Requesting Proof of Coverage (Entity Being Listed as the Certificate Holder) **NEW YORK CITY DEPT OF DESIGN AND CONSTRUCTION** **DCNY BUILDING** **30-30 THOMSON AVENUE** **LONG ISLAND CITY, NY 11101**	3a. Name of Insurance Carrier **HARTFORD LIFE AND ACCIDENT** 3b. Policy Number of entity listed in box "1a": **DBL-165369** 3c. Policy effective period: **10/01/2016** to **09/30/2017**

4. Policy covers:

a. ☒ All of the employer's employees eligible under the New York Disability Benefits Law

b. ☐ Only the following class or classes of the employer's employees:

Under penalty of perjury, I certify that I am an authorized representative or licensed agent of the insurance carrier referenced above and that the named insured has NYS Disability Benefits insurance coverage as described above.

Emily Percault

Date Signed 11/11/2016 By _____

(Signature of insurance carrier's authorized representative or NYS Licensed Insurance Agent of that insurance carrier)

Telephone Number (800) 454-7020 Title Manager

IMPORTANT: **If box "4a" is checked, and this form is signed by the insurance carrier's authorized representative or NYS Licensed Insurance Agent of that carrier, this certificate is COMPLETE. Mail it directly to the certificate holder.**
If box "4b" is checked, this certificate is NOT COMPLETE for purposes of Section 220, Subd. 8 of the Disability Benefits Law. It must be mailed for completion to the Workers' Compensation Board, DB Plans Acceptance Unit, 328 State Street, Schenectady, New York 12207.

PART 2. To be completed by NYS Workers' Compensation Board (Only if box "4b" of Part 1 has been checked)

State Of New York
Workers' Compensation Board

According to information maintained by the NYS Workers' Compensation Board, the above-named employer has complied with the NYS Disability Benefits Law with respect to all of his/her employees.

Date Signed_____ By_____

(Signature of NYS Workers' Compensation Board Employee)

Telephone Number_____ Title_____

Please Note: *Only insurance carriers licensed to write NYS disability benefits insurance policies and NYS licensed insurance agents of those insurance carriers are authorized to issue Form DB-120.1.* ***Insurance brokers are NOT authorized to issue this form.***

DB-120.1 (9-15)

Additional Instructions for Form DB-120.1

By signing this form, the insurance carrier identified in box "3" on this form is certifying that it is insuring the business referenced in box "1a" for disability benefits under the New York State Disability Benefits Law. The Insurance Carrier or its licensed agent will send this Certificate of Insurance to the entity listed as the certificate holder in box "2".

Will the carrier notify the certificate holder within 10 days of a policy being cancelled for non-payment of premium or within 30 days if cancelled for any other reason or if the insured is otherwise eliminated from the coverage indicated on this certificate prior to the end of the policy effective period? YES NO

This certificate is issued as a matter of information only and confers no rights upon the certificate holder. This certificate does not amend, extend or alter the coverage afforded by the policy listed, nor does it confer any rights or responsibilities beyond those contained in the referenced policy.

This certificate may be used as evidence of a Disability Benefits contract of insurance only while the underlying policy is in effect.

Please Note: Upon the cancellation of the disability benefits policy indicated on this form, if the business continues to be named on a permit, license or contract issued by a certificate holder, the business must provide that certificate holder with a new Certificate of NYS Disability Benefits Coverage or other authorized proof that the business is complying with the mandatory coverage requirements of the New York State Disability Benefits Law.

DISABILITY BENEFITS LAW

§220. Subd. 8

(a) The head of a state or municipal department, board, commission or office authorized or required by law to issue any permit for or in connection with any work involving the employment of employees in employment as defined in this article, and not withstanding any general or special statute requiring or authorizing the issue of such permits, shall not issue such permit unless proof duly subscribed by an insurance carrier is produced in a form satisfactory to the chair, that the payment of disability benefits for all employees has been secured as provided by this article. Nothing herein, however, shall be construed as creating any liability on the part of such state or municipal department, board, commission or office to pay any disability benefits to any such employee if so employed.

(b) The head of a state or municipal department, board, commission or office authorized or required by law to enter into any contract for or in connection with any work involving the employment of employees in employment as defined in this article and notwithstanding any general or special statute requiring or authorizing any such contract, shall not enter into any such contract unless proof duly subscribed by an insurance carrier is produced in a form satisfactory to the chair, that the payment of disability benefits for all employees has been secured as provided by this article.

STATE OF NEW YORK
WORKERS' COMPENSATION BOARD

CERTIFICATE OF NYS WORKERS' COMPENSATION INSURANCE COVERAGE

1a. Legal Name & Address of Insured (Use street address only) The Halcyon Construction Corp 65 Marble Avenue **Work Location of Insured** *(Only required if coverage is specifically limited to certain locations in New York State, i.e., a Wrap-Up Policy)*	**1b. Business Telephone Number of Insured** 914-741-1112 **1c. NYS Unemployment Insurance Employer Registration Number of Insured** **1d. Federal Employer Identification Number of Insured or Social Security Number** 132995431
2. Name and Address of the Entity Requesting Proof of Coverage (Entity Being Listed as the Certificate Holder) New York Dept of Design and Construction 30-30 Thomson Avenue Long Island City NY 11101	**3a. Name of Insurance Carrier** Star Indemnity & Liability Co. **3b. Policy Number of entity listed in box "1a"** 1000001110 **3c. Policy effective period** 7/1/2016 to 7/1/2017 **3d. The Proprietor, Partners or Executive Officers are** [x] **included.** (Only check box if all partners/officers included) [ ] **all excluded or certain partners/officers excluded.**

This certifies that the insurance carrier indicated above in box "3" insures the business referenced above in box "1a" for workers' compensation under the New York State Workers' Compensation Law. **(To use this form, New York (NY) must be listed under Item 3A on the INFORMATION PAGE of the workers' compensation insurance policy).** The Insurance Carrier or its licensed agent will send this Certificate of Insurance to the entity listed above as the certificate holder in box "2".

The Insurance Carrier will also notify the above certificate holder within 10 days IF a policy is canceled due to nonpayment of premiums or within 30 days IF there are reasons other than nonpayment of premiums that cancel the policy or eliminate the insured from the coverage indicated on this Certificate. (These notices may be sent by regular mail.) ***Otherwise, this Certificate is valid for one year after this form is approved by the insurance carrier or its licensed agent, or until the policy expiration date listed in box "3c", whichever is earlier***

Please Note: Upon the cancellation of the workers' compensation policy indicated on this form, if the business continues to be named on a permit, license or contract issued by a certificate holder, the business must provide that certificate holder with a new Certificate of Workers' Compensation Coverage or other authorized proof that the business is complying with the mandatory coverage requirements of the New York State Workers' Compensation Law.

Under penalty of perjury, I certify that I am an authorized representative or licensed agent of the insurance carrier referenced above and that the named insured has the coverage as depicted on this form.

Approved by: _____ _____
(Print name of authorized representative or licensed agent of insurance carrier)

Approved by: _____ 11/11/2016
(Signature) (Date)

Title: _____ President _____

Telephone Number of authorized representative or licensed agent of insurance carrier: 203-438-0404

Please Note: *Only insurance carriers and their licensed agents are authorized to issue Form C-105.2. Insurance brokers are* ***NOT*** *authorized to issue it.*

C-105.2 (9-07) www.wcb.state.ny.us

Workers' Compensation Law

Section 57. Restriction on issue of permits and the entering into contracts unless compensation is secured.

1. The head of a state or municipal department, board, commission or office authorized or required by law to issue any permit for or in connection with any work involving the employment of employees in a hazardous employment defined by this chapter, and notwithstanding any general or special statute requiring or authorizing the issue of such permits, shall not issue such permit unless proof duly subscribed by an insurance carrier is produced in a form satisfactory to the chair, that compensation for all employees has been secured as provided by this chapter. Nothing herein, however, shall be construed as creating any liability on the part of such state or municipal department, board, commission or office to pay any compensation to any such employee if so employed.

2. The head of a state or municipal department, board, commission or office authorized or required by law to enter into any contract for or in connection with any work involving the employment of employees in a hazardous employment defined by this chapter, notwithstanding any general or special statute requiring or authorizing any such contract, shall not enter into any such contract unless proof duly subscribed by an insurance carrier is produced in a form satisfactory to the chair, that compensation for all employees has been secured as provided by this chapter.

CERTIFICATION BY INSURANCE BROKER OR AGENT

The undersigned insurance broker represents to the City of New York that the attached Certificate of Insurance is accurate in all material respects.

Fairfield County Bank Insurance Services LLC
[Name Of Broker or Agent (Typewritten)]

401 Main Street Ridgefield CT 06877
[Address Of Broker or Agent (Typewritten)]

annmarie.spencer@fcbins.com
[E-Mail Address Of Broker or Agent (Typewritten)]

203-894-3188
[Phone Number/Fax Number Of Broker or Agent (Typewritten)]

[Signature Of Authorized Official, Broker or Agent]

Mark Connelly President
[Name And Title Of Authorized Official, Broker or Agent (Typewritten)]

State of CT)
) ss.:
County of Fairfield)

Sworn to before me this 11 day of Nov, 20 16

NOTARY PUBLIC FOR THE STATE OF CT

DANA A. GREY
Notary Public, State of Connecticut
My Commission Expires Mar. 31, 2019

ACORD®

CERTIFICATE OF LIABILITY INSURANCE

DATE (MM/DD/YYYY) 11/15/2016

THIS CERTIFICATE IS ISSUED AS A MATTER OF INFORMATION ONLY AND CONFERS NO RIGHTS UPON THE CERTIFICATE HOLDER. THIS CERTIFICATE DOES NOT AFFIRMATIVELY OR NEGATIVELY AMEND, EXTEND OR ALTER THE COVERAGE AFFORDED BY THE POLICIES BELOW. THIS CERTIFICATE OF INSURANCE DOES NOT CONSTITUTE A CONTRACT BETWEEN THE ISSUING INSURER(S), AUTHORIZED REPRESENTATIVE OR PRODUCER, AND THE CERTIFICATE HOLDER.

IMPORTANT: If the certificate holder is an ADDITIONAL INSURED, the policy(ies) must be endorsed. If SUBROGATION IS WAIVED, subject to the terms and conditions of the policy, certain policies may require an endorsement. A statement on this certificate does not confer rights to the certificate holder in lieu of such endorsement(s).

PRODUCER
Fairfield County Bank Insurance Services, LLC
401 Main Street
Ridgefield CT 06877

CONTACT NAME:
PHONE (A/C, No, Ext): 203-438-0404 FAX (A/C, No): 203-431-8789
E-MAIL ADDRESS: annmarie.spencer@fcbins.com

INSURER(S) AFFORDING COVERAGE	NAIC #
INSURER A : Steadfast Insurance Company	26387
INSURER B :	
INSURER C :	
INSURER D :	
INSURER E :	
INSURER F :	

INSURED HALCCON-01
New York City Transit Authority (NYCTA)
(See Description for Additional Named Insureds)
2 Broadway
New York NY 10004

COVERAGES CERTIFICATE NUMBER: 213222400 REVISION NUMBER:

THIS IS TO CERTIFY THAT THE POLICIES OF INSURANCE LISTED BELOW HAVE BEEN ISSUED TO THE INSURED NAMED ABOVE FOR THE POLICY PERIOD INDICATED. NOTWITHSTANDING ANY REQUIREMENT, TERM OR CONDITION OF ANY CONTRACT OR OTHER DOCUMENT WITH RESPECT TO WHICH THIS CERTIFICATE MAY BE ISSUED OR MAY PERTAIN, THE INSURANCE AFFORDED BY THE POLICIES DESCRIBED HEREIN IS SUBJECT TO ALL THE TERMS, EXCLUSIONS AND CONDITIONS OF SUCH POLICIES. LIMITS SHOWN MAY HAVE BEEN REDUCED BY PAID CLAIMS.

INSR LTR	TYPE OF INSURANCE	ADDL INSD	SUBR WVD	POLICY NUMBER	POLICY EFF (MM/DD/YYYY)	POLICY EXP (MM/DD/YYYY)	LIMITS	
A	X COMMERCIAL GENERAL LIABILITY			Q2030196601	11/14/2016	5/14/2018	EACH OCCURRENCE	$2,000,000
	CLAIMS-MADE / OCCUR						DAMAGE TO RENTED PREMISES (Ea occurrence)	$
	X Railroad Protect						MED EXP (Any one person)	$
							PERSONAL & ADV INJURY	$
	GEN'L AGGREGATE LIMIT APPLIES PER:						GENERAL AGGREGATE	$6,000,000
	POLICY / PRO-JECT / LOC						PRODUCTS - COMP/OP AGG	$
	OTHER:							$
	AUTOMOBILE LIABILITY						COMBINED SINGLE LIMIT (Ea accident)	$
	ANY AUTO						BODILY INJURY (Per person)	$
	ALL OWNED AUTOS / SCHEDULED AUTOS						BODILY INJURY (Per accident)	$
	HIRED AUTOS / NON-OWNED AUTOS						PROPERTY DAMAGE (Per accident)	$
								$
	UMBRELLA LIAB / OCCUR						EACH OCCURRENCE	$
	EXCESS LIAB / CLAIMS-MADE						AGGREGATE	$
	DED / RETENTION $							$
	WORKERS COMPENSATION AND EMPLOYERS' LIABILITY						PER STATUTE / OTH-ER	
	ANY PROPRIETOR/PARTNER/EXECUTIVE OFFICER/MEMBER EXCLUDED? Y / N	N / A					E.L. EACH ACCIDENT	$
	(Mandatory in NH) If yes, describe under DESCRIPTION OF OPERATIONS below						E.L. DISEASE - EA EMPLOYEE	$
							E.L. DISEASE - POLICY LIMIT	$

DESCRIPTION OF OPERATIONS / LOCATIONS / VEHICLES (ACORD 101, Additional Remarks Schedule, may be attached if more space is required)

QED 1014 , E-PIN# 501B0110001 DDC PIN#8502016WM0005C Rehabilitation of Existing Trunk Water Mains in Crescent Street Borough of Queens
Additional Named Insureds: Manhattan & Bronx Surface Transit Operation Authority (MaSBTOA) Staten Island Rapid Transit Operation Authority (SIRTOA) MTA Capital Construction Company Metropolitan Transportation Authority (MTA) including its subsidiaries, City of New York (Owner) and all other indemnified Policies

CERTIFICATE HOLDER

New York City Dept of Design and Construction
30-30 Thompson Avenue
Long Island City NY 11101

CANCELLATION

SHOULD ANY OF THE ABOVE DESCRIBED POLICIES BE CANCELLED BEFORE THE EXPIRATION DATE THEREOF, NOTICE WILL BE DELIVERED IN ACCORDANCE WITH THE POLICY PROVISIONS.

AUTHORIZED REPRESENTATIVE

ACORD®

CERTIFICATE OF LIABILITY INSURANCE

DATE (MM/DD/YYYY) 11/15/2016

THIS CERTIFICATE IS ISSUED AS A MATTER OF INFORMATION ONLY AND CONFERS NO RIGHTS UPON THE CERTIFICATE HOLDER. THIS CERTIFICATE DOES NOT AFFIRMATIVELY OR NEGATIVELY AMEND, EXTEND OR ALTER THE COVERAGE AFFORDED BY THE POLICIES BELOW. THIS CERTIFICATE OF INSURANCE DOES NOT CONSTITUTE A CONTRACT BETWEEN THE ISSUING INSURER(S), AUTHORIZED REPRESENTATIVE OR PRODUCER, AND THE CERTIFICATE HOLDER.

IMPORTANT: If the certificate holder is an ADDITIONAL INSURED, the policy(ies) must be endorsed. If SUBROGATION IS WAIVED, subject to the terms and conditions of the policy, certain policies may require an endorsement. A statement on this certificate does not confer rights to the certificate holder in lieu of such endorsement(s).

PRODUCER
Fairfield County Bank Insurance Services, LLC
401 Main Street
Ridgefield CT 06877

CONTACT NAME:
PHONE (A/C, No, Ext): 203-438-0404 FAX (A/C, No): 203-431-8789
E-MAIL ADDRESS: annmarie.spencer@fcbins.com

INSURER(S) AFFORDING COVERAGE	NAIC #
INSURER A : Travelers Property Casualty Insuran	25674
INSURER B :	
INSURER C :	
INSURER D :	
INSURER E :	
INSURER F :	

INSURED HALCCON-01
The Halcyon Construction Corp
65 Marble Avenue
Pleasantville NY 10570

COVERAGES CERTIFICATE NUMBER: 16325248 REVISION NUMBER:

THIS IS TO CERTIFY THAT THE POLICIES OF INSURANCE LISTED BELOW HAVE BEEN ISSUED TO THE INSURED NAMED ABOVE FOR THE POLICY PERIOD INDICATED. NOTWITHSTANDING ANY REQUIREMENT, TERM OR CONDITION OF ANY CONTRACT OR OTHER DOCUMENT WITH RESPECT TO WHICH THIS CERTIFICATE MAY BE ISSUED OR MAY PERTAIN, THE INSURANCE AFFORDED BY THE POLICIES DESCRIBED HEREIN IS SUBJECT TO ALL THE TERMS, EXCLUSIONS AND CONDITIONS OF SUCH POLICIES. LIMITS SHOWN MAY HAVE BEEN REDUCED BY PAID CLAIMS.

INSR LTR	TYPE OF INSURANCE	ADDL INSD	SUBR WVD	POLICY NUMBER	POLICY EFF (MM/DD/YYYY)	POLICY EXP (MM/DD/YYYY)	LIMITS	
	COMMERCIAL GENERAL LIABILITY CLAIMS-MADE OCCUR GEN'L AGGREGATE LIMIT APPLIES PER: POLICY PRO-JECT LOC OTHER:						EACH OCCURRENCE	$
							DAMAGE TO RENTED PREMISES (Ea occurrence)	$
							MED EXP (Any one person)	$
							PERSONAL & ADV INJURY	$
							GENERAL AGGREGATE	$
							PRODUCTS - COMP/OP AGG	$
								$
	AUTOMOBILE LIABILITY ANY AUTO ALL OWNED AUTOS SCHEDULED AUTOS HIRED AUTOS NON-OWNED AUTOS						COMBINED SINGLE LIMIT (Ea accident)	$
							BODILY INJURY (Per person)	$
							BODILY INJURY (Per accident)	$
							PROPERTY DAMAGE (Per accident)	$
								$
	UMBRELLA LIAB OCCUR EXCESS LIAB CLAIMS-MADE DED RETENTION $						EACH OCCURRENCE	$
							AGGREGATE	$
								$
	WORKERS COMPENSATION AND EMPLOYERS' LIABILITY ANY PROPRIETOR/PARTNER/EXECUTIVE OFFICER/MEMBER EXCLUDED? Y / N (Mandatory in NH) If yes, describe under DESCRIPTION OF OPERATIONS below	N / A					PER STATUTE OTH-ER	
							E.L. EACH ACCIDENT	$
							E.L. DISEASE - EA EMPLOYEE	$
							E.L. DISEASE - POLICY LIMIT	$
A	Property Coverage			QT6601G400244	7/1/2016	7/1/2017	Limit DED	$40000 $2500

DESCRIPTION OF OPERATIONS / LOCATIONS / VEHICLES (ACORD 101, Additional Remarks Schedule, may be attached if more space is required)

RE: QED-1014, E-PIN # 85016B0110001, DDC PIN # 8502016WM0005C, Rehabilitation of Existing Trunk Water Mains in Crescent Street Borough of Queens
Property coverage includes Fire Ins, Extended coverage and vandalism, malicious mischief and burglary, and theft insurance coverage
City of New York Department of Design & Construction, City of New York are loss payee

CERTIFICATE HOLDER

New York City Dept of Design and Construction
30-30 Thompson Avenue
Long Island City NY 11101

CANCELLATION

SHOULD ANY OF THE ABOVE DESCRIBED POLICIES BE CANCELLED BEFORE THE EXPIRATION DATE THEREOF, NOTICE WILL BE DELIVERED IN ACCORDANCE WITH THE POLICY PROVISIONS.

AUTHORIZED REPRESENTATIVE

<u>Performance Bond #2 (Pages 96 to 99)</u>: Use if the total contract price is more than $5 Million.

PERFORMANCE BOND #2

KNOW ALL PERSONS BY THESE PRESENTS:,
That we, _____

_____

_____

hereinafter referred to as the "Principal,"
and, _____

_____

_____

hereinafter referred to as the "Surety" ("Sureties") are held and firmly bound to THE CITY OF NEW YORK, hereinafter referred to as the "City" or to its successors and assigns in the penal sum
of _____

_____

_____

($_____) Dollars, lawful money of the United States for the payment of which said sum of money well and truly to be made, we, and each of us, bind ourselves, our heirs, executors, administrators, successors and assigns, jointly and severally, firmly by these presents.

WHEREAS, the Principal is about to enter, or has entered, into a Contract in writing with the City for

_____

_____

a copy of which Contract is annexed to and hereby made a part of this bond as though herein set forth in full;

NOW, THEREFORE, the conditions of this obligation are such that if the Principal, his or its representatives or assigns, shall well and faithfully perform the said Contract and all modifications, amendments, additions and alterations thereto that may hereafter be made, according to its terms and its true intent and meaning, including repair and or replacement of defective work and guarantees of maintenance for the periods stated in the Contract, and shall fully indemnify and save harmless the City from all cost and damage which it may suffer by reason of the Principal's default of the Contract, and shall fully reimburse and repay the City for all outlay and expense which the City may incur in making

<u>Performance Bond #2 (Pages 96 to 99)</u>: Use if the total contract price is more than $5 Million.

good any such default and shall protect the said City of New York against, and pay any and all amounts, damages, cost and judgments which may or shall be recovered against said City or its officers or agents or which the said City of New York may be called upon to pay any person or corporation by reason of any damages arising or growing out of the Principal's default of the Contract, then this obligation shall be null and void, otherwise to remain in full force and effect.

The Surety (Sureties), for value received, hereby stipulates and agrees, upon written notice from the City that the City has determined that the Principal is in default of the Contract, to either (1) pay the full amount of the above penal sum in complete discharge and exoneration of this bond and of all the liabilities of the Surety relating to this bond, or (2) fully perform and complete the Work to be performed under the Contract, pursuant to the terms, conditions, and covenants thereof. The Surety (Sureties) further agrees, at its option, either to tender the penal sum or to commence and diligently perform the Work specified in the Contract, including physical site work, within twenty-five (25) business days after written notice thereof from the City and to complete all Work within the time set forth in the Contract or such other time as agreed to between the City and Surety in accordance with the Contract. The Surety and the City reserve all rights and defenses each may have against the other; provided, however, that the Surety expressly agrees that its reservation of rights shall not provide a basis for non-performance of its obligation to commence and to complete all Work as provided herein.

The Surety (Sureties), for value received, for itself and its successors and assigns, hereby stipulates and agrees that the obligation of said Surety (Sureties) and its bond shall be in no way impaired or affected by any extension of time, modification, omission, addition, or change in or to the said Contract or the Work to be performed thereunder, or by any payment thereunder before the time required therein, or by any waiver of any provisions thereof, or by any assignment, subletting or other transfer thereof or of any Work to be performed or any moneys due or to become due thereunder; and said Surety (Sureties) does hereby waive notice of any and all of such extensions, modifications, omissions, additions, changes, payments, waivers, assignments, subcontracts and transfers, and hereby expressly stipulates and agrees that any and all things done and omitted to be done by and in relation to assignees, subcontractors, and other transferees shall have the same effect as to said Surety (Sureties) as though done or omitted to be done by or in relation to said Principal.

<u>Performance Bond #2 (Pages 96 to 99)</u>: Use if the total contract price is more than $5 Million.

IN WITNESS WHEREOF, The Principal and the Surety (Sureties) have hereunto set their hands and seals, and such of them as are corporations have caused their corporate seals to be hereunto affixed and these presents to be signed by their proper officers, this

_____ day of _____ 20 _____.

(Seal)

_____(L.S.)
Principal

By:_____.

(Seal)

Surety

By:_____.
_____.

(Seal)

Surety

By:_____.
_____.

(Seal)

Surety

By:_____.
_____.

(Seal)

Surety

By:_____.
_____.

(Seal)

Surety

By:_____.

Bond Premium Rate _____.

Bond Premium Cost _____.

If the Contractor (Principal) is a partnership, the bond should be signed by each of the individuals who are partners.

If the Contractor (Principal) is a corporation, the bond should be signed in its correct corporate name by a duly authorized officer, agent, or attorney-in-fact.

There should be executed an appropriate number of counterparts of the bond corresponding to the number of counterparts of the Contract.

Performance Bond #2 (Pages 96 to 99): Use if the total contract price is more than $5 Million.

ACKNOWLEDGMENT OF PRINCIPAL IF A CORPORATION

State of _____ County of _____ ss:

On this _____ day of _____, 20 _____ before me personally came _____,
to me known, who, being by me duly sworn did depose and say that he resides at _____
_____ ; that he/she is the _____
of the corporation described in and which executed the foregoing instrument; that he/she signed his/her name to the foregoing instrument by order of the directors of said corporation as the duly authorized and binding act thereof.

_____
Notary Public or Commissioner of Deeds.

ACKNOWLEDGMENT OF PRINCIPAL IF A PARTNERSHIP

State of _____ County of _____ ss:

On this _____ day of _____, 20 _____ before me personally came _____,
to me known, who, being by me duly sworn did depose and say that he/she resides at_____

_____; that he/she is _____ partner of
_____, a limited/general partnership existing under the laws of the State of
_____, the partnership described in and which executed the foregoing instrument;
and that he/she signed his/her name to the foregoing instrument as the duly authorized and binding act of said partnership.

_____
Notary Public or Commissioner of Deeds

ACKNOWLEDGMENT OF PRINCIPAL IF AN INDIVIDUAL

State of _____ County of _____ ss:

On this _____ day of _____, 20_____ before me personally came _____,
to me known, who, being by me duly sworn did depose and say that he/she resides at_____
_____, and that he/she is the individual whose name is subscribed to the within instrument and acknowledged to me that by his/her signature on the instrument, said individual executed the instrument.

_____
Notary Public or Commissioner of Deeds

Each executed bond should be accompanied by: (a) appropriate acknowledgments of the respective parties; (b) appropriate duly certified copy of Power of Attorney or other certificate of authority where bond is executed by agent, officer or other representative of Principal or Surety; (c) a duly certified extract from By-Laws or resolutions of Surety under which Power of Attorney or other certificate of authority of its agent, officer or representative was issued, and (d) certified copy of latest published financial statement of assets and liabilities of Surety.

* * * * * * * *

Affix Acknowledgments and Justification of Sureties.

<u>Payment Bond (Pages 100 to 103)</u>: Use for any contract for which a Payment Bond is required.

PAYMENT BOND

KNOW ALL PERSONS BY THESE PRESENTS, That we, _____

_____

_____

_____

hereinafter referred to as the "Principal", and _____

_____

_____

_____

_____

hereinafter referred to as the "Surety" ("Sureties") are held and firmly bound to THE CITY OF NEW YORK, hereinafter referred to as the "City" or to its successors and assigns, in the penal sum of

_____

_____

_____

($_____) Dollars, lawful money of the United States, for the payment of which said sum of money well and truly to be made, we, and each of us, bind ourselves, our heirs, executors, administrators, successors and assigns, jointly and severally, firmly by these presents.

WHEREAS, the Principal is about to enter, or has entered, into a Contract in writing with the City for

_____

_____

_____

a copy of which Contract is annexed to and hereby made a part of this bond as though herein set forth in full;

NOW, THEREFORE, the conditions of this obligation are such that if the Principal, his or its representatives or assigns and other Subcontractors to whom Work under this Contract is sublet and his or their successors and assigns shall promptly pay or cause to be paid all lawful claims for

(a) Wages and compensation for labor performed and services rendered by all persons engaged in the prosecution of the Work under said Contract, and any amendment or extension thereof or addition thereto, whether such persons be agents servants or employees of the Principal or any such Subcontractor, including all persons so engaged who perform the work of laborers or mechanics at or in the vicinity of the site

of the Project regardless of any contractual relationship between the Principal or such Subcontractors, or his or their successors or assigns, on the one hand and such laborers or mechanics on the other, but not including office employees not regularly stationed at the site of the project; and

(b) Materials and supplies (whether incorporated in the permanent structure or not), as well as teams, fuels, oils, implements or machinery furnished, used or consumed by said Principal or any subcontractor at or in the vicinity of the site of the Project in the prosecution of the Work under said Contract and any amendment or extension thereof or addition thereto; then this obligation shall be void, otherwise to remain in full force and effect.

This bond is subject to the following additional conditions, limitations and agreements:

(a) The Principal and Surety (Sureties) agree that this bond shall be for the benefit of any materialmen or laborer having a just claim, as well as the City itself.

(b) All persons who have performed labor, rendered services or furnished materials and supplies, as aforesaid, shall have a direct right of action against the Principal and his, its or their successors and assigns, and the Surety (Sureties) herein, or against either or both or any of them and their successors and assigns. Such persons may sue in their own name, and may prosecute the suit to judgment and execution without the necessity of joining with any other persons as party plaintiff.

(c) The Principal and Surety (Sureties) agree that neither of them will hold the City liable for any judgment for costs of otherwise, obtained by either or both of them against a laborer or materialman in a suit brought by either a laborer or materialman under this bond for moneys allegedly due for performing work or furnishing material.

(d) The Surety (Sureties) or its successors and assigns shall not be liable for any compensation recoverable by an employee or laborer under the Workmen's Compensation Law.

(e) In no event shall the Surety (Sureties), or its successors or assigns, be liable for a greater sum than the penalty of this bond or be subject to any suit, action or proceeding hereon that is instituted by any person, firm, or corporation hereunder later than two years after the complete performance of said Contract and final settlement thereof.

The Principal, for himself and his successors and assigns, and the Surety (Sureties), for itself and its successors and assigns, do hereby expressly waive any objection that might be interposed as to the right of the City to require a bond containing the foregoing provisions, and they do hereby further expressly waive any defense which they or either of them might interpose to an action brought hereon by any person, firm or corporation, including subcontractors, materialmen and third persons, for work, labor, services, supplies or material performed rendered, or furnished as aforesaid upon the ground that there is no law authorizing the City to require the foregoing provisions to be place in this bond.

And the Surety (Sureties), for value received, for itself and its successors and assigns, hereby stipulates and agrees that the obligation of said Surety (Sureties), and its bonds shall be in no way impaired or affected by any extension of time, modification, omission, addition, or change in or of the said Contract or the work to be performed thereunder, or by any payment thereunder before the time required therein, or by any waiver of any provisions thereof, or by any assignment, subletting or other transfer thereof or of any part thereof, or of any Work to be performed, or any moneys due to become due thereunder and said Surety (Sureties) does hereby waive notice of any and all of such extensions, modifications, omissions, additions, changes, payments, waivers, assignments, subcontracts and transfers, and hereby expressly stipulates and agrees that any and all things done and omitted to be done by and in relation to assignees, Subcontractors, and other transferees shall have the same effect as to said Surety (Sureties) as though done or omitted to be done or in relation to said Principal.

<u>Payment Bond (Pages 100 to 103)</u>: Use for any contract for which a Payment Bond is required.

IN WITNESS WHEREOF, the Principal and the Surety (Sureties) have hereunto set their hands and seals, and such of them as are corporations have caused their corporate seals to be hereunto affixed and these presents to be signed by their proper officers, this _____ day of _____, _____.

(Seal) _____(L.S.)
Principal

By:_____

(Seal) _____
Surety

By:_____

(Seal) _____
Surety

By:_____

(Seal) _____
Surety

By:_____

(Seal) _____
Surety

By:_____

If the Contractor (Principal) is a partnership, the bond should be signed by each of the individuals who are partners.

If the Contractor (Principal) is a corporation, the bond should be signed in its correct corporate name by a duly authorized officer, agent, or attorney-in-fact.

There should be executed an appropriate number of counterparts of the bond corresponding to the number of counterparts of the Contract.

<u>Payment Bond (Pages 100 to 103)</u>: Use for any contract for which a Payment Bond is required.

ACKNOWLEDGMENT OF PRINCIPAL, IF A CORPORATION

State of _____ County of _____ ss:

On this _____ day of _____, _____, before me personally came _____ to me known, who, being by me duly sworn did depose and say that he resides at _____ _____ that he is the _____ of the corporation described in and which executed the foregoing instrument; that he knows the seal of said corporation; that one of the seals affixed to said instrument is such seal; that it was so affixed by order of the directors of said corporation, and that he signed his name thereto by like order.

_____
Notary Public or Commissioner of Deeds

ACKNOWLEDGMENT OF PRINCIPAL, IF A PARTNERSHIP

State of _____ County of _____ ss:

On this _____ day of _____, _____, before me personally appeared _____ to me known, and known to me to be one of the members of the firm of _____ _____ described in and who executed the foregoing instrument; and he acknowledged to me that he executed the same as and for the act and deed of said firm.

_____
Notary Public or Commissioner of Deeds

ACKNOWLEDGMENT OF PRINCIPAL, IF AN INDIVIDUAL

State of _____ County of _____ ss:

On this _____ day of _____, _____, before me personally appeared _____ to me known, and known to me to be the person described in and who executed the foregoing instrument; and acknowledged that he executed the same.

_____
Notary Public or Commissioner of Deeds

Each executed bond should be accompanied by: (a) appropriate acknowledgments of the respective parties; (b) appropriate duly certified copy of Power of Attorney or other certificate of authority where bond is executed by agent, officer or other representative of Principal or Surety; (c) a duly certified extract from By-Laws or resolutions of Surety under which Power of Attorney or other certificate of authority of its agent, officer or representative was issued, and (d) certified copy of latest published financial statement of assets and liabilities of Surety.

* * * * * * * *

Affix Acknowledgments and Justification of Sureties.

(NO TEXT ON THIS PAGE)

SCHEDULE OF WORKMEN, MECHANICS AND LABORERS

The following is a list of classifications for workmen, mechanics and laborers which are anticipated to be employed in the performance of work under this contract, followed by a schedule of the prevailing wage rates and supplemental benefits for all classifications as established by the Comptroller of the City of New York.

Request for interpretation or correction under Subsection A of Section No. 3 in the Information for Bidders includes all requests for clarification of the classification of trades to be employed in the performance of the work under this contract.

In the event that a trade not listed in the classification of trades required to be used at the time of the award of the contract is in fact employed during the performance of this contract, the Contractor shall be required to obtain from the agency the prevailing wage rates and supplementary benefits for the trades used and to complete the performance of this contract at the price at which the contract was awarded.

CODE	CLASSIFICATION
15 42 001	Rigger
15 42 002	Sign Erector
16 11 001	Gardener
16 11 002	Tree Pruner
16 11 003	Tree Remover
16 11 011	Asphalt Raker (Highway & Paving)
16 11 012	Tamper (Highway & Paving)
16 11 013	Curbsetter (Highway & Paving)
16 11 014	Formsetter (Highway & Paving)
16 11 015	Rammerman (Highway & Paving)
16 11 016	Laborer (Highway & Paving)
16 11 017	ALL OTHER TITLES (Highway & Paving)
16 23 001	Laborer
16 23 002	Operating Engineer (Heavy Construction-Maintenance)
16 23 003	Junior Operating Engineer
16 23 004	Junior Operating Engineer
16 23 005	Junior Operating Engineer
16 23 006	Fireman (Heavy Construction)
16 23 007	Oiler (Heavy Construction)
16 23 051	Surveyor-Heavy Construction
16 23 052	Surveyor-Heavy Construction-Instrument Man
16 23 053	Surveyor-Heavy Construction-Rodman
16 23 057	Surveyor-Land Surveying-Party Chief
16 23 058	Surveyor-Land Surveying-Instrument Man
16 23 059	Surveyor-Land Surveying-Rodman

CODE	CLASSIFICATION
16 23 061	Operating Engineer-Road & Heavy Construction
16 23 062	Operating Engineer-Paving
16 23 063	Operating Engineer-Concrete
16 23 071	Teamster-Heavy Equipment Trailer Driver
16 23 072	Teamster-Dump Truck Driver
16 23 073	Teamster-Flat Bed Trailer Driver (3-Axle)
16 23 074	Teamster-Redi-Mix (Sand and Gravel)
16 29 011	Drill Runners
17 11 001	Plumbers
17 21 001	Painter (Brush & Roller)
17 31 001	Electrician
17 41 001	Bricklayer
17 41 002	Mason Tender
17 41 004	Cement Mason
17 42 002	Metallic Lather
17 51 001	Carpenter
17 51 002	Dock Builder
17 71 001	Cement & Concrete Worker
17 91 001	Structural Iron Worker
17 95 001	Barman
17 96 021	Derrickmen & Riggers
17 99 001	Ornamental Iron Worker
17 99 002	Sandblaster
17 99 005	Pointers (Waterproofer)
17 99 011	Welders

Each classification may include trainees depending upon project staffing schedules and as required by the terms of this contract.

LABOR LAW §220 PREVAILING WAGE SCHEDULE

Workers, Laborers and Mechanics employed on a public work project must receive not less than the prevailing rate of wage and benefits for the classification of work performed by each upon such public work. Pursuant to Labor Law §220 the Comptroller of the City of New York has promulgated this schedule solely for Workers, Laborers and Mechanics engaged by private contractors on New York City public work contracts.

This schedule is a compilation of separate determinations of the prevailing rate of wage and supplements made by the Comptroller for each trade classification listed herein pursuant to New York State Labor Law section 220 (5). The source of the wage and supplement rates, whether a collective bargaining agreement, survey data or other, is listed at the end of each classification.

Agency Chief Contracting Officers should contact the Bureau of Labor Law's Classification Unit with any questions concerning trade classifications, prevailing rates or prevailing practices with respect to procurement on New York City public works contracts. Contractors are advised to review the Comptroller's Prevailing Wage Schedule before bidding on public works contracts. Contractors with questions concerning trade classifications, prevailing rates or prevailing practices with respect to public works contracts in the procurement stage must contact the contracting agency responsible for the procurement.

Any error as to compensation under the prevailing wage law or other information as to trade classification, made by the contracting agency in the contract documents or in any other communication, will not preclude a finding against the contractor of prevailing wage violation.

Any questions concerning trade classifications, prevailing rates or prevailing practices on New York City public works contracts that have already been awarded may be directed to the Bureau of Labor Law's Classification Unit by calling (212) 669-7974. All callers must have the agency name and contract registration number available when calling with questions on public works contracts. Please direct all other compliance issues to: Bureau of Labor Law, Attn: Wasyl Kinach, P.E., Office of the Comptroller, 1 Centre Street, Room 1122, New York, N.Y. 10007; Fax (212) 669-4002.

The appropriate schedule of prevailing wages and benefits must be posted at all public work sites pursuant to Labor Law §220 (3-a) (a).

This schedule is applicable to work performed during the effective period, unless otherwise noted. Changes to this schedule are published on our web site www.comptroller.nyc.gov. Contractors must pay the wages and supplements in effect when the worker, laborer, mechanic performs the work. Preliminary schedules for future one-year periods appear in the City Record on or about June 1 each succeeding year. Final schedules appear on or about July 1 in the City Record and on our web site www.comptroller.nyc.gov.

The Comptroller's Office has attempted to include all overtime, shift and night differential, Holiday, Saturday, Sunday or other premium time work. However, this schedule does not set forth every prevailing practice with respect to such rates with which employers must comply. All such practices are nevertheless part of the employer's prevailing wage obligation and contained in the collective bargaining agreements of the prevailing wage unions. These collective bargaining agreements are available for inspection by appointment. Requests for appointments may be made by calling (212) 669-4443, Monday through Friday between the hours of 9 a.m. and 5 p.m.

Prevailing rates and ratios for apprentices are attached to this schedule in the Appendix. Pursuant to Labor Law §220 (3-e), only apprentices who are individually registered in a bona fide program to which the employer contractor is a participant, registered with the New York State Department of Labor, may be employed on a public work project. Workers who are not journey persons or not registered apprentices pursuant to Labor Law §220 (3-e) may not be substituted for apprentices and must be paid as journey persons.

Public Work construction, reconstruction, demolition, excavation, rehabilitation, repair, renovation, alteration, or improvement contracts awarded pursuant to a Project Labor Agreement ("PLA") in accordance with Labor Law section 222 may have different labor standards for shift, premium and overtime work. Please refer to the PLA's pre-negotiated labor agreements for wage and benefit rates applicable to work performed outside of the regular workday. More information is available at the Mayor's Office of Contract Services (MOCS) web page at http://www.nyc.gov/html/mocs/html/vendors/pla.shtml.

All the provisions of Labor Law section 220 remain applicable to PLA work including, but not limited to, the enforcement of prevailing wage requirements by the Comptroller; however, we will enforce shift, premium, overtime and other non-standard rates as they appear in a project's pre-negotiated labor agreement.

In order to meet their obligation to provide prevailing supplemental benefits to each covered employee, employers must either:

1) Provide bona-fide benefits which cost the employer no less than the prevailing supplemental benefits rate; or
2) Supplement the employee's hourly wage by an amount no less than the prevailing supplemental benefits rate; or
3) Provide a combination of bona-fide benefits and wage supplements which cost the employer no less than the prevailing supplemental benefits rate in total.

Particular attention should be given to the supplemental benefits requirement. Although in most instances the payment or provision for supplemental benefits is for each hour worked, some classifications require the payment or provision of supplemental benefits for each hour paid. Consequently, some prevailing practices require benefits to be purchased at the overtime, shift differential, Holiday, Saturday, Sunday or other premium time rate.

Benefits are paid for *EACH HOUR WORKED* unless otherwise noted.

Wasyl Kinach, P.E.
Director of Classifications
Bureau of Labor Law

TABLE OF CONTENTS

ASBESTOS HANDLER
(Hazardous Material; Disturbs, removes, encapsulates, repairs, or encloses friable asbestos material)

Asbestos Handler

Effective Period: 7/1/2015 - 6/30/2016
Wage Rate per Hour: $36.00
Supplemental Benefit Rate per Hour: $15.95

Overtime
Time and one half the regular rate after an 8 hour day.
Time and one half the regular rate for Sunday.
Time and one half the regular hourly rate after 40 hours in any work week.

Overtime Holidays
Time and one half the regular rate for work on the following holiday(s).
New Year's Day
Good Friday
Memorial Day
Independence Day
Labor Day
Thanksgiving Day
Christmas Day
Easter

Paid Holidays
None

(Local #78 and Local #12A)

BLASTER

Blaster

Effective Period: 7/1/2015 - 6/30/2016
Wage Rate per Hour: $46.89
Supplemental Benefit Rate per Hour: $41.19

Blaster (Hydraulic)

Effective Period: 7/1/2015 - 6/30/2016

Wage Rate per Hour: $47.71
Supplemental Benefit Rate per Hour: $41.19

Blaster - Trac Drill Hydraulic

Effective Period: 7/1/2015 - 6/30/2016
Wage Rate per Hour: $42.25
Supplemental Benefit Rate per Hour: $41.19

Blaster - Wagon: Air Trac: Quarry Bar: Drillrunners

Effective Period: 7/1/2015 - 6/30/2016
Wage Rate per Hour: $41.46
Supplemental Benefit Rate per Hour: $41.19

Blaster - Operators of Jack Hammers

Chippers: Spaders: Concrete Breakers: and all other pneumatic tools of like usage: Walk Behind Self Propelled Hydraulic Asphalt and Concrete Breakers: Hydro (Water) Demolition

Effective Period: 7/1/2015 - 6/30/2016
Wage Rate per Hour: $40.42
Supplemental Benefit Rate per Hour: $41.19

Blaster - Powder Carriers

Effective Period: 7/1/2015 - 6/30/2016
Wage Rate per Hour: $36.53
Supplemental Benefit Rate per Hour: $41.19

Blaster - Hydraulic Trac Drill Chuck Tender

Effective Period: 7/1/2015 - 6/30/2016
Wage Rate per Hour: $35.25
Supplemental Benefit Rate per Hour: $41.19

Blaster - Chuck Tender & Nipper

Effective Period: 7/1/2015 - 6/30/2016
Wage Rate per Hour: $34.50
Supplemental Benefit Rate per Hour: $41.19

Blaster - Magazine Keepers: (Watch Person)

Effective Period: 7/1/2015 - 6/30/2016
Wage Rate per Hour: $20.68
Supplemental Benefit Rate per Hour: $41.19

Overtime Description

Magazine Keepers:
Time and one half for work performed in excess of forty (40) hours per week and for work performed on Saturdays, Sundays and Holidays.

All Other Employees:
Time and one-half for the first eight hours of work on Saturday and for Make-up Time. Double time for all hours over eight Monday through Friday (except make-up hours) and for all hours worked on Sunday and Holidays.

Overtime

Double time the regular rate after an 8 hour day.
Time and one half the regular rate for Saturday.
Double time the regular rate for Sunday.

Overtime Holidays

Double time the regular rate for work on the following holiday(s).
New Year's Day
Memorial Day
Independence Day
Labor Day
Columbus Day
Presidential Election Day
Thanksgiving Day
Christmas Day

Paid Holidays

None

Shift Rates

A single shift shall be 8 hours plus an unpaid lunch, starting at 8:00 A.M (or between 6:00 A.M. and 10:00 A.M. on weekdays). When two (2) shifts are employed, each shift shall be 8 hours plus ½ hour unpaid lunch. When three (3) shifts are employed, each shift will work seven and one-half (7 ½) hours, but will be paid for eight (8) hours, since only one-half (½) hour is allowed for mealtime. When two (2) or more shifts are employed, single time will be paid for each shift. The first 8 hours of any and all work performed Monday through Friday inclusive of any off-shift shall be at the single time rate.

(Local #29)

BOILERMAKER

Boilermaker

Effective Period: 7/1/2015 - 6/30/2016
Wage Rate per Hour: $51.56
Supplemental Benefit Rate per Hour: $41.69
Supplemental Note: For time and one half overtime - $61.94 For double overtime - $82.18

Overtime Description

For Repair and Maintenance work:
Time and one half the regular rate after an 8 hour day.
Time and one half the regular rate for Saturday.
Double time the regular rate for Sunday.
For New Construction work:
Double time the regular rate after an 8 hour day.
Double time the regular time rate for Saturday.
Double time the regular rate for Sunday.

Overtime Holidays

Double time the regular rate for work on the following holiday(s).
New Year's Day
President's Day
Memorial Day
Independence Day
Columbus Day
Election Day
Veteran's Day
Thanksgiving Day
Christmas Day

Quadruple time the regular rate for work on the following holiday(s).
Labor Day

Paid Holidays

Good Friday
Day after Thanksgiving
Day before Christmas
Day before New Year's Day

Shift Rates

When shifts are required, the first shift shall work eight (8) hours at the regular straight-time hourly rate. The second shift shall work seven and one-half (7 ½) hours and receive eight hours at the regular straight time hourly rate plus twenty-five cents ($0.25) per hour. The third shift shall work seven (7) hours and receive eight hours at the regular straight time hourly rate plus fifty cents ($0.50) per hour. A thirty (30) minute lunch period shall not be considered as time worked. Work in excess of the above shall be paid overtime at the appropriate new construction work or repair work overtime wage and supplemental benefit hourly rate.

(Local #5)

BRICKLAYER

Bricklayer

Effective Period: 7/1/2015 - 6/30/2016
Wage Rate per Hour: **$48.91**

Supplemental Benefit Rate per Hour: $28.03

Overtime
Time and one half the regular rate after a 7 hour day.
Time and one half the regular rate for Saturday.
Double time the regular rate for Sunday.
Saturday may be used as a make-up day at straight time when a day is lost during that week to inclement weather.

Overtime Holidays
Double time the regular rate for work on the following holiday(s).
New Year's Day
Memorial Day
Independence Day
Labor Day
Thanksgiving Day
Christmas Day

Paid Holidays
None

Shift Rates
Overtime rates to be paid outside the regular scheduled work day.

(Bricklayer District Council)

CARPENTER - BUILDING COMMERCIAL

Building Commercial

Effective Period: 7/1/2015 - 6/30/2016
Wage Rate per Hour: $50.50
Supplemental Benefit Rate per Hour: $45.88

Overtime
Time and one half the regular rate after an 8 hour day.
Time and one half the regular rate for Saturday.
Double time the regular rate for Sunday.
Saturday may be used as a make-up day at straight time when a day is lost during that week to inclement weather.

Overtime Holidays
Double time the regular rate for work on the following holiday(s).
New Year's Day
Washington's Birthday
Memorial Day

Independence Day
Labor Day
Columbus Day
Presidential Election Day
Thanksgiving Day
Day after Thanksgiving
Christmas Day

Paid Holidays
None

Shift Rates
The second shift will receive one hour at the double time rate of pay for the last hour of the shift; eight hours pay for seven hours of work, nine hours pay for eight hours of work. There must be a first shift in order to work a second shift.

(Carpenters District Council)

CARPENTER - HEAVY CONSTRUCTION WORK
(Construction of Engineering Structures and Building Foundations)

Heavy Construction Work

Effective Period: 7/1/2015 - 6/30/2016
Wage Rate per Hour: $50.50
Supplemental Benefit Rate per Hour: $46.65

Overtime
Time and one half the regular rate after an 8 hour day.
Time and one half the regular rate for Saturday.
Double time the regular rate for Sunday.
Saturday may be used as a make-up day at straight time when a day is lost during that week to inclement weather.

Overtime Holidays
Double time the regular rate for work on the following holiday(s).
New Year's Day
President's Day
Memorial Day
Independence Day
Labor Day
Columbus Day
Presidential Election Day
Thanksgiving Day
Christmas Day

Paid Holidays
None

Shift Rates
Off shift work commencing between 5:00 P.M. and 11:00 P.M. shall work eight and one half hours allowing for one half hour for lunch. The wage rate shall be 113% of the straight time hourly wage rate.

(Carpenters District Council)

CARPENTER - SIDEWALK SHED, SCAFFOLD AND HOIST

Carpenter - Hod Hoist

(Assisted by Mason Tender)

Effective Period: 7/1/2015 - 6/30/2016
Wage Rate per Hour: $49.60
Supplemental Benefit Rate per Hour: $43.00

Overtime
Time and one half the regular rate after an 8 hour day.
Time and one half the regular rate for Saturday.
Double time the regular rate for Sunday.
Saturday may be used as a make-up day at straight time when a day is lost during that week to inclement weather.

Overtime Holidays
Double time the regular rate for work on the following holiday(s).
New Year's Day
President's Day
Memorial Day
Independence Day
Labor Day
Columbus Day
Presidential Election Day
Thanksgiving Day
Day after Thanksgiving
Christmas Day

Paid Holidays
None

Shift Rates
The second shift will receive one hour at the double time rate of pay for the last hour of the shift; eight hours pay for seven hours of work, nine hours pay for eight hours of work. There must be a first shift in order to work a second shift.

(Carpenters District Council)

CEMENT & CONCRETE WORKER

Cement & Concrete Worker

Effective Period: 7/1/2015 - 6/30/2016
Wage Rate per Hour: $42.48
Supplemental Benefit Rate per Hour: $26.57
Supplemental Note: $29.32 on Saturdays; $32.07 on Sundays & Holidays

Overtime Description
Time and one half the regular rate after 7 hour day (time and one half the regular rate after an 8 hour day when working with Dockbuilders on pile cap forms and for work below street level to the top of the foundation wall, not to exceed 2 feet or 3 feet above the sidewalk-brick shelf, when working on the foundation and structure.)

Overtime
Time and one half the regular rate for Saturday.
Double time the regular rate for Sunday.

Overtime Holidays
Double time the regular rate for work on the following holiday(s).
New Year's Day
President's Day
Good Friday
Memorial Day
Independence Day
Labor Day
Columbus Day
Presidential Election Day
Thanksgiving Day
Christmas Day

Paid Holidays
1/2 day before Christmas Day
1/2 day before New Year's Day

Shift Rates
On shift work extending over a twenty-four hour period, all shifts are paid at straight time.

(Cement Concrete Workers District Council)

CEMENT MASON

Cement Mason

Effective Period: 7/1/2015 - 6/30/2016
Wage Rate per Hour: $38.88
Supplemental Benefit Rate per Hour: $39.80
Supplemental Note: For time and one half overtime - $49.05; For double overtime - $58.30

Overtime Description
Time and one-half the regular rate after an 8 hour day, double time the regular rate after 10 hours. Time and one-half the regular rate on Saturday, double time the regular rate after 10 hours. Double time the regular rate on Sunday.

Overtime Holidays
Double time the regular rate for work on the following holiday(s).
New Year's Day
President's Day
Good Friday
Memorial Day
Independence Day
Labor Day
Columbus Day
Presidential Election Day
Thanksgiving Day
Christmas Day

Paid Holidays
Any worker who reports to work on Christmas Eve or New Year's Eve pursuant to his employer's instruction shall be entitled to three (3) hours afternoon pay without working.

Shift Rates
For an off shift day, (work at times other than the regular 7:00 A.M. to 3:30 P.M. work day) a cement mason shall be paid at the regular hourly rate plus a 25% per hour differential. Four Days a week at Ten (10)hour day.

(Local #780)

CORE DRILLER

Core Driller

Effective Period: 7/1/2015 - 6/30/2016
Wage Rate per Hour: $36.82
Supplemental Benefit Rate per Hour: $22.69

Core Driller Helper

Effective Period: 7/1/2015 - 6/30/2016
Wage Rate per Hour: $29.44
Supplemental Benefit Rate per Hour: $22.69

Core Driller Helper(Third year in the industry)

Effective Period: 7/1/2015 - 6/30/2016
Wage Rate per Hour: $26.50
Supplemental Benefit Rate per Hour: $22.69

Core Driller Helper (Second year in the industry)

Effective Period: 7/1/2015 - 6/30/2016
Wage Rate per Hour: $23.55
Supplemental Benefit Rate per Hour: $22.69

Core Driller Helper (First year in the industry)

Effective Period: 7/1/2015 - 6/30/2016
Wage Rate per Hour: $20.61
Supplemental Benefit Rate per Hour: $22.69

Overtime Description

Time and one half the regular rate for work on a holiday plus Holiday pay when worked.

Overtime

Time and one half the regular rate after an 8 hour day.
Time and one half the regular rate for Saturday.
Double time the regular rate for Sunday.
Time and one half the regular rate for work on the following holiday(s).

Paid Holidays

New Year's Day
Memorial Day
Independence Day
Labor Day
Thanksgiving Day
Christmas Day

Shift Rates

The shift day shall be the continuous eight and one-half (8½) hours from 6:00 A.M. to 2:30 P.M. and from 2:30 P.M. to 11:00 P.M., including one-half (½) hour of employees regular rate of pay for lunch. When two (2) or more shifts are employed, single time shall be paid for each shift, but those employees employed on a shift other than from 8:00 A.M. to 5:00 P.M. shall, in addition, receive seventy-five cents ($0.75) per hour differential for each hour worked. When three (3) shifts are needed, each shift shall work seven and one-half (7 ½) hours paid for eight (8) hours of labor and be permitted one-half (½) hour for mealtime.

(Carpenters District Council)

DERRICKPERSON AND RIGGER

Derrick Person & Rigger

Effective Period: 7/1/2015 - 6/30/2016
Wage Rate per Hour: $44.84
Supplemental Benefit Rate per Hour: $49.28
Supplemental Note: The above supplemental rate applies for work performed in Manhattan, Bronx, Brooklyn and Queens. $50.70 - For work performed in Staten Island.

Overtime Description
The first two hours of overtime on weekdays and the first seven hours of work on Saturdays are paid at time and one half for wages and supplemental benefits. All additional overtimes is paid at double time for wages and supplemental benefits. Deduct $1.42 from the Staten Island hourly benefits rate before computing overtime.

Overtime
Double time the regular rate for Sunday.

Overtime Holidays
Double time the regular rate for work on the following holiday(s).
New Year's Day
Washington's Birthday
Good Friday
Memorial Day
Independence Day
Labor Day
Thanksgiving Day
Christmas Day

Paid Holidays
1/2 day on Christmas Eve if work is performed in the A.M.

(Local #197)

DIVER

Diver (Marine)

Effective Period: 7/1/2015 - 6/30/2016
Wage Rate per Hour: $63.82

Supplemental Benefit Rate per Hour: $46.65

Diver Tender (Marine)

Effective Period: 7/1/2015 - 6/30/2016
Wage Rate per Hour: $45.47
Supplemental Benefit Rate per Hour: $46.65

Overtime
Time and one half the regular rate after an 8 hour day.
Time and one half the regular rate for Saturday.
Double time the regular rate for Sunday.
Saturday may be used as a make-up day at straight time when a day is lost during that week to inclement weather.

Overtime Holidays
Double time the regular rate for work on the following holiday(s).
New Year's Day
President's Day
Memorial Day
Independence Day
Labor Day
Columbus Day
Presidential Election Day
Thanksgiving Day
Christmas Day

Paid Holidays
None

Shift Rates
When three shifts are utilized each shift shall work seven and one half-hours (7 1/2 hours) and paid for 8 hours, allowing for one half hour for lunch.

(Carpenters District Council)

DOCKBUILDER - PILE DRIVER

Dockbuilder - Pile Driver

Effective Period: 7/1/2015 - 6/30/2016
Wage Rate per Hour: $50.50
Supplemental Benefit Rate per Hour: $46.65

Overtime
Time and one half the regular rate after an 8 hour day.

Time and one half the regular rate for Saturday.
Double time the regular rate for Sunday.
Saturday may be used as a make-up day at straight time when a day is lost during that week to inclement weather.

Overtime Holidays

Double time the regular rate for work on the following holiday(s).
New Year's Day
President's Day
Memorial Day
Independence Day
Labor Day
Columbus Day
Presidential Election Day
Thanksgiving Day
Christmas Day

Paid Holidays

None

Shift Rates

Off shift work commencing between 5:00 P.M. and 11:00 P.M. shall work eight and one half hours allowing for one half hour for lunch. The wage rate shall be 113% of the straight time hourly wage rate.

(Carpenters District Council)

DRIVER: TRUCK (TEAMSTER)

Driver - Dump Truck

Effective Period: 7/1/2015 - 6/30/2016
Wage Rate per Hour: $39.53
Supplemental Benefit Rate per Hour: $41.59
Supplemental Note: Over 40 hours worked: time and one half rate $16.94, double time rate $22.58

Driver - Tractor Trailer

Effective Period: 7/1/2015 - 6/30/2016
Wage Rate per Hour: $39.50
Supplemental Benefit Rate per Hour: $43.35
Supplemental Note: For over 40 hours worked: at time and one half - $16.65; at double time - $22.20

Driver - Euclid & Turnapull Operator

Effective Period: 7/1/2015 - 6/30/2016
Wage Rate per Hour: $40.06

Supplemental Benefit Rate per Hour: $43.35
Supplemental Note: Over 40 hours worked: time and one half rate $16.65 double time rate $22.20

Overtime Description

For Paid Holidays: Holiday pay for all holidays shall be prorated based two hours per day for each day worked in the holiday week, not to exceed 8 hours of holiday pay. For Thanksgiving week, the prorated share shall be 5 1/3 hours of holiday pay for each day worked in Thanksgiving week.

Overtime

Time and one half the regular rate after an 8 hour day.
Time and one half the regular rate for Saturday.
Double time the regular rate for Sunday.

Overtime Holidays

Double time the regular rate for work on the following holiday(s).
New Year's Day
President's Day
Memorial Day
Independence Day
Labor Day
Columbus Day
Veteran's Day
Thanksgiving Day
Day after Thanksgiving
Christmas Day

Paid Holidays

New Year's Day
President's Day
Memorial Day
Independence Day
Labor Day
Columbus Day
Veteran's Day
Thanksgiving Day
Day after Thanksgiving
Christmas Day

Shift Rates

Off single shift work commencing between 6:00 P.M. and 5:00 A.M. shall work eight and one half hours allowing for one half hour for lunch and receive 9 hours pay for 8 hours of work.

Driver Redi-Mix (Sand & Gravel)

Effective Period: 7/1/2015 - 6/30/2016
Wage Rate per Hour: $36.30
Supplemental Benefit Rate per Hour: $40.02
Supplemental Note: Over 40 hours worked: time and one half rate $13.90, double time rate $18.53

Overtime Description

For Paid Holidays: Employees working two (2) days in the calendar week in which the holiday falls are to paid for these holidays, provided they shape each remaining workday during that calendar week.

Overtime

Time and one half the regular rate after an 8 hour day.
Time and one half the regular rate for Saturday.
Double time the regular rate for Sunday.

Overtime Holidays

Double time the regular rate for work on the following holiday(s).
President's Day
Columbus Day
Veteran's Day

Triple time the regular rate for work on the following holiday(s).
New Year's Day
Memorial Day
Independence Day
Labor Day
Thanksgiving Day
Christmas Day

Paid Holidays

New Year's Day
President's Day
Memorial Day
Independence Day
Labor Day
Columbus Day
Election Day
Thanksgiving Day
Christmas Day

(Local #282)

ELECTRICIAN

(Including all low voltage cabling carrying data; video; and voice in combination with data and or video.)

Electrician "A" (Regular Day)

Effective Period: 7/1/2015 - 6/30/2016
Wage Rate per Hour: $54.00
Supplemental Benefit Rate per Hour: $50.03

Electrician "A" (Regular Day Overtime)

Effective Period: 7/1/2015 - 6/30/2016
Wage Rate per Hour: $81.00
Supplemental Benefit Rate per Hour: $53.41

Electrician "A" (Day Shift)

Effective Period: 7/1/2015 - 6/30/2016
Wage Rate per Hour: $54.00
Supplemental Benefit Rate per Hour: $50.03

Electrician "A" (Day Shift Overtime After 8 hours)

Effective Period: 7/1/2015 - 6/30/2016
Wage Rate per Hour: $81.00
Supplemental Benefit Rate per Hour: $53.41

Electrician "A" (Swing Shift)

Effective Period: 7/1/2015 - 6/30/2016
Wage Rate per Hour: $63.36
Supplemental Benefit Rate per Hour: $56.94

Electrician "A" (Swing Shift Overtime After 7.5 hours)

Effective Period: 7/1/2015 - 6/30/2016
Wage Rate per Hour: $95.04
Supplemental Benefit Rate per Hour: $60.91

Electrician "A" (Graveyard Shift)

Effective Period: 7/1/2015 - 6/30/2016
Wage Rate per Hour: $70.97
Supplemental Benefit Rate per Hour: $62.78

Electrician "A" (Graveyard Shift Overtime After 7 hours)

Effective Period: 7/1/2015 - 6/30/2016
Wage Rate per Hour: $106.46
Supplemental Benefit Rate per Hour: $67.23

Overtime

Time and one half the regular rate after a 7 hour day.
Time and one half the regular rate for Saturday.
Time and one half the regular rate for Sunday.

Overtime Holidays

Time and one half the regular rate for work on a holiday.
New Year's Day
Martin Luther King Jr. Day
President's Day
Memorial Day
Independence Day
Labor Day
Columbus Day
Veteran's Day
Thanksgiving Day
Day after Thanksgiving
Christmas Day

Paid Holidays

None

Shift Rates

When so elected by the Employer, one or more shifts of at least five days duration may be scheduled as follows: Day Shift: 8:00 am to 4:30 pm, Swing Shift 4:30 pm to 12:30 am, Graveyard Shift: 12:30 am to 8:00 am.

For multiple shifts of temporary light and/or power, the temporary light and/or power employee shall be paid for 8 hours at the straight time rate. For three or less workers performing 8 hours temporary light and/or power the supplemental benefit rate is $24.39.

Electrician "M" (First 8 hours)

"M" rated work shall be defined as jobbing: electrical work of limited duration and scope, also consisting of repairs and/or replacement of electrical and tele-data equipment. Includes all work necessary to retrofit, service, maintain and repair all kinds of lighting fixtures and local lighting controls and washing and cleaning of foregoing fixtures.

Effective Period: 7/1/2015 - 6/30/2016
Wage Rate per Hour: $27.50
Supplemental Benefit Rate per Hour: $20.82
First and Second Year "M" Wage Rate Per Hour: $23.00
First and Second Year "M" Supplemental Rate: $18.56

Electrician "M" (Overtime After First 8 hours)

"M" rated work shall be defined as jobbing: electrical work of limited duration and scope, also consisting of repairs and/or replacement of electrical and tele-data equipment. Includes all work necessary to retrofit, service, maintain and repair all kinds of lighting fixtures and local lighting controls and washing and cleaning of foregoing fixtures.

Effective Period: 7/1/2015 - 6/30/2016
Wage Rate per Hour: $41.25
Supplemental Benefit Rate per Hour: $22.54
First and Second Year "M" Wage Rate Per Hour: $34.50

First and Second Year "M" Supplemental Rate: $20.00

Overtime
Time and one half the regular rate after an 8 hour day.
Time and one half the regular rate for Saturday.
Time and one half the regular rate for Sunday.

Overtime Holidays
Time and one half the regular rate for work on the following holiday(s).
New Year's Day
Martin Luther King Jr. Day
President's Day
Memorial Day
Independence Day
Labor Day
Columbus Day
Veteran's Day
Thanksgiving Day
Day after Thanksgiving
Christmas Day

Paid Holidays
None

(Local #3)

ELECTRICIAN - ALARM TECHNICIAN
(Scope of Work - Inspect, test, repair, and replace defective, malfunctioning, or broken devices, components and controls of Fire, Burglar and Security Systems)

Alarm Technician

Effective Period: 7/1/2015 - 3/9/2016
Wage Rate per Hour: $31.40
Supplemental Benefit Rate per Hour: $14.76
Supplemental Note: $13.26 only after 8 hours worked in a day

Effective Period: 3/10/2016 - 6/30/2016
Wage Rate per Hour: $32.00
Supplemental Benefit Rate per Hour: $15.47
Supplemental Note: $13.97 only after 8 hours worked in a day

Overtime Description

Time and one half the regular rate for work on the following holidays: Columbus Day, Veterans Day, Day after Thanksgiving.
Double time the regular rate for work on the following holidays: New Year's day, Martin Luther King Jr. Day, President's Day, Memorial Day, Independence Day, Labor Day, Thanksgiving Day, Christmas Day.

Overtime

Time and one half the regular rate after an 8 hour day.
Time and one half the regular rate for Saturday.
Double time the regular rate for Sunday.

Paid Holidays

New Year's Day
Martin Luther King Jr. Day
President's Day
Memorial Day
Independence Day
Labor Day
Columbus Day
Veteran's Day
Thanksgiving Day
Day after Thanksgiving
Christmas Day

Shift Rates

Night Differential is based upon a ten percent (10%) differential between the hours of 4:00 P.M. and 12:30 A.M. and a fifteen percent (15%) differential for the hours 12:00 A.M. to 8:00 A.M.

Vacation

At least 1 year of employment.....ten (10) days
5 years or more of employment.....fifteen (15) days
10 years of employment.....twenty (20) days
Plus one Personal Day per year

Sick Days:
One day per Year. Up to 4 vacation days may be used as sick days.

(Local #3)

ELECTRICIAN-STREET LIGHTING WORKER

Electrician - Electro Pole Electrician

Effective Period: 7/1/2015 - 6/30/2016
Wage Rate per Hour: $54.00
Supplemental Benefit Rate per Hour: $51.86

Electrician - Electro Pole Foundation Installer

Effective Period: 7/1/2015 - 6/30/2016
Wage Rate per Hour: $40.93
Supplemental Benefit Rate per Hour: $39.46

Electrician - Electro Pole Maintainer

Effective Period: 7/1/2015 - 6/30/2016
Wage Rate per Hour: $35.05
Supplemental Benefit Rate per Hour: $35.51

Overtime Description

Electrician - Electro Pole Electrician: Time and one half the regular rate after a 7 hour day and after 5 consecutive days worked per week.
Electrician - Electro Pole Foundation Installer: Time and one half the regular rate after 8 hours within a 24 hour period and Saturday and Sunday.
Electrician - Electro Pole Maintainer: Time and one half the regular rate after a 7 hour day and after 5 consecutive days worked per week. Saturdays and Sundays may be used as a make-up day at straight time when a day is lost during the week to inclement weather.

Overtime Holidays

Time and one half the regular rate for work on the following holiday(s).
New Year's Day
Martin Luther King Jr. Day
President's Day
Memorial Day
Independence Day
Labor Day
Columbus Day
Veteran's Day
Thanksgiving Day
Day after Thanksgiving
Christmas Day

Paid Holidays

None

(Local #3)

ELEVATOR CONSTRUCTOR

Elevator Constructor

Effective Period: 7/1/2015 - 3/16/2016
Wage Rate per Hour: $59.55
Supplemental Benefit Rate per Hour: $31.07

Effective Period: 3/17/2016 - 6/30/2016
Wage Rate per Hour: $60.96
Supplemental Benefit Rate per Hour: $32.67

Overtime Description

For New Construction: work performed after 7 or 8 hour day, Saturday, Sunday or between 4:30pm and 7:00am shall be paid at double time rate.

Existing buildings: work performed after an 8 hour day, Saturday, Sunday or between 5:30pm and 7:00 am shall be paid time and one half.

Overtime

Double time the regular rate for work on the following holiday(s).

Paid Holidays

New Year's Day
President's Day
Good Friday
Memorial Day
Independence Day
Labor Day
Columbus Day
Veteran's Day
Thanksgiving Day
Day after Thanksgiving
Christmas Day

Vacation

Employer contributes 8% of regular basic hourly rate as vacation pay for employees with more than 15 years of service, and 6% for employees with 5 to 15 years of service, and 4% for employees with less than 5 years of service.

(Local #1)

ELEVATOR REPAIR & MAINTENANCE

Elevator Service/Modernization Mechanic

Effective Period: 7/1/2015 - 3/16/2016
Wage Rate per Hour: $46.92
Supplemental Benefit Rate per Hour: $30.91

Effective Period: 3/17/2016 - 6/30/2016
Wage Rate per Hour: $47.91
Supplemental Benefit Rate per Hour: $32.51

Overtime Description

For Scheduled Service Work: Double time - work scheduled in advance by two or more workers performed on Sundays, Holidays, and between midnight and 7:00am.

Overtime

Time and one half the regular rate after an 8 hour day.
Time and one half the regular rate for Saturday.
Time and one half the regular rate for Sunday.
Time and one half the regular rate for work on a holiday plus the day's pay.

Paid Holidays

New Year's Day
President's Day
Good Friday
Memorial Day
Independence Day
Labor Day
Columbus Day
Veteran's Day
Thanksgiving Day
Day after Thanksgiving
Christmas Day

Shift Rates

Afternoon shift - regularly hourly rate plus a (15%) fifteen percent differential. Graveyard shift - time and one half the regular rate.

Vacation

Employer contributes 8% of regular basic hourly rate as vacation pay for employees with more than 15 years of service, and 6% for employees with 5 to 15 years of service, and 4% for employees with less than 5 years of service.

(Local #1)

ENGINEER

Engineer - Heavy Construction Operating Engineer I

Cherrypickers 20 tons and over and Loaders (rubber tired and/or tractor type with a manufacturer's minimum rated capacity of six cubic yards and over).

Effective Period: 7/1/2015 - 6/30/2016
Wage Rate per Hour: $64.31
Supplemental Benefit Rate per Hour: $34.25
Supplemental Note: $61.60 on overtime
Shift Wage Rate: $102.90

Engineer - Heavy Construction Operating Engineer II

Backhoes, Basin Machines, Groover, Mechanical Sweepers, Bobcat, Boom Truck, Barrier Transport (Barrier Mover) & machines of similar nature. Operation of Churn Drills and machines of a similar nature, Stetco Silent Hoist and machines of similar nature, Vac-Alls, Meyers Machines, John Beam and machines of a similar nature, Ross Carriers and Travel Lifts and machines of a similar nature, Bulldozers, Scrapers and Turn-a-Pulls: Tugger Hoists (Used exclusively for handling excavated material); Tractors with attachments, Hyster and Roustabout Cranes, Cherrypickers. Austin Western, Grove and machines of a similar nature, Scoopmobiles, Monorails, Conveyors, Trenchers: Loaders-Rubber Tired and Tractor: Barber Greene and Eimco Loaders and Eimco Backhoes; Mighty Midget and similar breakers and Tampers, Curb and Gutter Pavers and Motor Patrol, Motor Graders and all machines of a similar nature. Locomotives 10 Tons or under. Mini-Max, Break-Tech and machines of a similar nature; Milling machines, robotic and demolition machines and machines of a similar nature, shot blaster, skid steer machines and machines of a similar nature including bobcat, pile rig rubber-tired excavator (37,000 lbs. and under), 2 man auger.

Effective Period: 7/1/2015 - 6/30/2016
Wage Rate per Hour: $62.40
Supplemental Benefit Rate per Hour: $34.25
Supplemental Note: $61.60 on overtime
Shift Wage Rate: $99.84

Engineer - Heavy Construction Operating Engineer III

Minor Equipment such as Tractors, Post Hole Diggers, Ditch Witch (Walk Behind), Road Finishing Machines, Rollers five tons and under, Tugger Hoists, Dual Purpose Trucks, Fork Lifts, and Dempsey Dumpers, Fireperson.

Effective Period: 7/1/2015 - 6/30/2016
Wage Rate per Hour: $59.20
Supplemental Benefit Rate per Hour: $34.25
Supplemental Note: $61.60 on overtime
Shift Wage Rate: $94.72

Engineer - Heavy Construction Maintenance Engineer I

Installing, Repairing, Maintaining, Dismantling and Manning of all equipment including Steel Cutting, Bending and Heat Sealing Machines, Mechanical Heaters, Grout Pumps, Bentonite Pumps & Plants, Screening Machines, Fusion Coupling Machines, Tunnel Boring Machines Moles and Machines of a similar nature, Power Packs, Mechanical Hydraulic Jacks; all drill rigs including but not limited to Churn, Rotary Caisson, Raised Bore & Drills of a similar nature; Personnel, Inspection & Safety Boats or any boats used to perform functions of same, Mine Hoists, Whirlies, all Climbing Cranes, all Tower Cranes, including but not limited to Truck Mounted and Crawler Type and machines of similar nature; Maintaining Hydraulic Drills and machines of a similar nature; Well Point System-Installation and dismantling; Burning, Welding, all Pumps regardless of size and/or motor power, except River Cofferdam Pumps and Wells Point Pumps; Motorized Buggies (three or more); equipment used in the cleaning and televising of sewers, but not limited to jet-rodder/vacuum truck, vacall/vactor, closed circuit television inspection equipment; high powered water pumps, jet pumps; screed machines and concrete finishing machines of a similar nature; vermeers.

Effective Period: 7/1/2015 - 6/30/2016
Wage Rate per Hour: $62.11
Supplemental Benefit Rate per Hour: $34.25
Supplemental Note: $61.60 on overtime
Shift Wage Rate: $99.38

Engineer - Heavy Construction Maintenance Engineer II

On Base Mounted Tower Cranes

Effective Period: 7/1/2015 - 6/30/2016
Wage Rate per Hour: $81.54
Supplemental Benefit Rate per Hour: $34.25
Supplemental Note: $61.60 on overtime
Shift Wage Rate: $130.46

Engineer - Heavy Construction Maintenance Engineer III

On Generators, Light Towers

Effective Period: 7/1/2015 - 6/30/2016
Wage Rate per Hour: $41.04
Supplemental Benefit Rate per Hour: $34.25
Supplemental Note: $61.60 on overtime
Shift Wage Rate: $65.66

Engineer - Heavy Construction Maintenance Engineer IV

On Pumps and Mixers including mud sucking

Effective Period: 7/1/2015 - 6/30/2016
Wage Rate per Hour: $42.11
Supplemental Benefit Rate per Hour: $34.25
Supplemental Note: $61.60 on overtime
Shift Wage Rate: $67.38

Engineer - Heavy Construction Oilers I

Gradalls, Cold Planer Grader, Concrete Pumps, Driving Truck Cranes, Driving and Operating Fuel and Grease Trucks.

Effective Period: 7/1/2015 - 6/30/2016
Wage Rate per Hour: $56.02
Supplemental Benefit Rate per Hour: $34.25
Supplemental Note: $61.60 on overtime
Shift Wage Rate: $89.63

Engineer - Heavy Construction Oilers II

All gasoline, electric, diesel or air operated Shovels, Draglines, Backhoes, Keystones, Pavers, Gunite Machines, Battery of Compressors, Crawler Cranes, two-person Trenching Machines.

Effective Period: 7/1/2015 - 6/30/2016
Wage Rate per Hour: $38.79
Supplemental Benefit Rate per Hour: $34.25
Supplemental Note: $61.60 on overtime
Shift Wage Rate: $62.06

Engineer - Steel Erection Maintenance Engineers

Derrick, Travelers, Tower, Crawler Tower and Climbing Cranes

Effective Period: 7/1/2015 - 6/30/2016
Wage Rate per Hour: $59.77
Supplemental Benefit Rate per Hour: $34.25
Supplemental Note: $61.60 on overtime
Shift Wage Rate: $95.63

Engineer - Steel Erection Oiler I

On a Truck Crane

Effective Period: 7/1/2015 - 6/30/2016
Wage Rate per Hour: $55.95
Supplemental Benefit Rate per Hour: $34.25
Supplemental Note: $61.60 on overtime
Shift Wage Rate: $89.52

Engineer - Steel Erection Oiler II

On a Crawler Crane

Effective Period: 7/1/2015 - 6/30/2016
Wage Rate per Hour: $42.64
Supplemental Benefit Rate per Hour: $34.25
Supplemental Note: $61.60 on overtime
Shift Wage Rate: $68.22

Overtime Description

On jobs of more than one shift, if the next shift employee fails to report for work through any cause over which the employer has no control, the employee on duty who works the next shift continues to work at the single time rate.

Overtime

Double time the regular rate after an 8 hour day.
Double time the regular time rate for Saturday.
Double time the regular rate for Sunday.
Double time the regular rate for work on the following holiday(s).

Paid Holidays

New Year's Day
Lincoln's Birthday
President's Day
Memorial Day
Independence Day
Labor Day
Columbus Day
Veteran's Day

Thanksgiving Day
Day after Thanksgiving
Christmas Day
Employees must work at least one day in the payroll week in which the holiday occurs to receive the paid holiday

---

Engineer - Building Work Maintenance Engineers I

Installing, repairing, maintaining, dismantling (of all equipment including: Steel Cutting and Bending Machines, Mechanical Heaters, Mine Hoists, Climbing Cranes, Tower Cranes, Linden Peine, Lorain, Liebherr, Mannes, or machines of a similar nature, Well Point Systems, Deep Well Pumps, Concrete Mixers with loading Device, Concrete Plants, Motor Generators when used for temporary power and lights), skid steer machines of a similar nature including bobcat.

Effective Period: 7/1/2015 - 6/30/2016
Wage Rate per Hour: $56.88
Supplemental Benefit Rate per Hour: $34.25
Supplemental Note: $61.60 on overtime

Engineer - Building Work Maintenance Engineers II

On Pumps, Generators, Mixers and Heaters

Effective Period: 7/1/2015 - 6/30/2016
Wage Rate per Hour: $44.22
Supplemental Benefit Rate per Hour: $34.25
Supplemental Note: $61.60 on overtime

Engineer - Building Work Oilers I

All gasoline, electric, diesel or air operated Gradealls: Concrete Pumps, Overhead Cranes in Power Houses: Their duties shall be to assist the Engineer in oiling, greasing and repairing of all machines; Driving Truck Cranes: Driving and Operating Fuel and Grease Trucks, Cherrypickers (hydraulic cranes) over 70,000 GVW, and machines of a similar nature.

Effective Period: 7/1/2015 - 6/30/2016
Wage Rate per Hour: $54.08
Supplemental Benefit Rate per Hour: $34.25
Supplemental Note: $61.60 on overtime

Engineer - Building Work Oilers II

Oilers on Crawler Cranes, Backhoes, Trenching Machines, Gunite Machines, Compressors (three or more in Battery).

Effective Period: 7/1/2015 - 6/30/2016
Wage Rate per Hour: $40.21
Supplemental Benefit Rate per Hour: $34.25
Supplemental Note: $61.60 on overtime

Overtime Description

On jobs of more than one shift, if an Employee fails to report for work through any cause over which the Employer has no control, the Employee on duty will continue to work at the rate of single time.

Overtime

Double time the regular rate after an 8 hour day.
Double time the regular time rate for Saturday.
Double time the regular rate for Sunday.
Double time the regular rate for work on the following holiday(s).

Paid Holidays

New Year's Day
Lincoln's Birthday
President's Day
Memorial Day
Independence Day
Labor Day
Columbus Day
Veteran's Day
Thanksgiving Day
Christmas Day
Employees must work at least one day in the payroll week in which the holiday occurs to receive the paid holiday

Shift Rates

Off Shift: double time the regular hourly rate.

(Local #15)

ENGINEER - CITY SURVEYOR AND CONSULTANT

Party Chief

Effective Period: 7/1/2015 - 6/30/2016
Wage Rate per Hour: $37.04
Supplemental Benefit Rate per Hour: $18.60
Supplemental Note: Overtime Benefit Rate - $25.45 per hour (time & one half) $32.30 per hour (double time).

Instrument Person

Effective Period: 7/1/2015 - 6/30/2016
Wage Rate per Hour: $30.59
Supplemental Benefit Rate per Hour: $18.60
Supplemental Note: Overtime Benefit Rate - $25.45 per hour (time & one half) $32.30 per hour (double time).

Rodperson

Effective Period: 7/1/2015 - 6/30/2016
Wage Rate per Hour: $26.52
Supplemental Benefit Rate per Hour: $18.60
Supplemental Note: Overtime Benefit Rate - $25.45 per hour (time & one half) $32.30 per hour (double time).

Overtime Description

Time and one half the regular rate after an 8 hour day, Time and one half the regular rate for Saturday for the first eight hours worked, Double time the regular time rate for Saturday for work performed in excess of eight hours, Double time the regular rate for Sunday and Double time the regular rate for work on a holiday.

Paid Holidays

New Year's Day
Lincoln's Birthday
President's Day
Memorial Day
Independence Day
Labor Day
Columbus Day
Veteran's Day
Thanksgiving Day
Day after Thanksgiving
Christmas Day
Employees must work at least one day in the payroll week in which the holiday occurs to receive the paid holiday

(Operating Engineer Local #15-D)

ENGINEER - FIELD (BUILDING CONSTRUCTION)
(Construction of Building Projects, Concrete Superstructures, etc.)

Field Engineer - BC Party Chief

Effective Period: 7/1/2015 - 6/30/2016
Wage Rate per Hour: $60.77
Supplemental Benefit Rate per Hour: $32.40
Supplemental Note: Overtime Benefit Rate - $45.28 per hour (time & one half) $58.15 per hour (double time).

Field Engineer - BC Instrument Person

Effective Period: 7/1/2015 - 6/30/2016
Wage Rate per Hour: $47.20
Supplemental Benefit Rate per Hour: $32.40
Supplemental Note: Overtime Benefit Rate - $45.28 per hour (time & one half) $58.15 per hour (double time).

Field Engineer - BC Rodperson

Effective Period: 7/1/2015 - 6/30/2016
Wage Rate per Hour: $30.49
Supplemental Benefit Rate per Hour: $32.40
Supplemental Note: Overtime Benefit Rate - $45.28 per hour (time & one half) $58.15 per hour (double time).

Overtime Description

Time and one half the regular rate after a 7 hour work and time and one half the regular rate for Saturday for the first seven hours worked, Double time the regular time rate for Saturday for work performed in excess of seven hours, Double time the regular rate for Sunday and Double time the regular rate for work on a holiday.

Paid Holidays

New Year's Day
President's Day
Good Friday
Memorial Day
Independence Day
Labor Day
Columbus Day
Veteran's Day
Thanksgiving Day
Christmas Day
Employees must work at least one day in the payroll week in which the holiday occurs to receive the paid holiday

(Operating Engineer Local #15-D)

ENGINEER - FIELD (HEAVY CONSTRUCTION)
(Construction of Roads, Tunnels, Bridges, Sewers, Building Foundations, Engineering Structures etc.)

Field Engineer - HC Party Chief

Effective Period: 7/1/2015 - 6/30/2016
Wage Rate per Hour: $66.43
Supplemental Benefit Rate per Hour: $32.40
Supplemental Note: Overtime benefit rate - $45.28 per hour (time & one half), $58.15 per hour (double time).

Field Engineer - HC Instrument Person

Effective Period: 7/1/2015 - 6/30/2016
Wage Rate per Hour: $48.82
Supplemental Benefit Rate per Hour: $32.40
Supplemental Note: Overtime benefit rate - $45.28 per hour (time & one half), $58.15 per hour (double time).

Field Engineer - HC Rodperson

Effective Period: 7/1/2015 - 6/30/2016
Wage Rate per Hour: $40.99
Supplemental Benefit Rate per Hour: $32.40
Supplemental Note: Overtime benefit rate - $45.28 per hour (time & one half), $58.15 per hour (double time).

Overtime Description

Time and one half the regular rate after an 8 hour day, Time and one half the regular rate for Saturday for the first eight hours worked, Double time the regular time rate for Saturday for work performed in excess of eight hours, Double time the regular rate for Sunday and Double time the regular rate for work on a holiday.

Paid Holidays

New Year's Day
Lincoln's Birthday
President's Day
Memorial Day
Independence Day
Labor Day
Columbus Day
Veteran's Day
Thanksgiving Day
Christmas Day
Employees must work at least one day in the payroll week in which the holiday occurs to receive the paid holiday

(Operating Engineer Local #15-D)

ENGINEER - FIELD (STEEL ERECTION)

Field Engineer - Steel Erection Party Chief

Effective Period: 7/1/2015 - 6/30/2016
Wage Rate per Hour: $62.26
Supplemental Benefit Rate per Hour: $32.40
Supplemental Note: Overtime benefit rate - $45.28 per hour (time & one half), $58.15 per hour (double time).

Field Engineer - Steel Erection Instrument Person

Effective Period: 7/1/2015 - 6/30/2016
Wage Rate per Hour: $48.57
Supplemental Benefit Rate per Hour: $32.40
Supplemental Note: Overtime benefit rate - $45.28 per hour (time & one half), $58.15 per hour (double time).

Field Engineer - Steel Erection Rodperson

Effective Period: 7/1/2015 - 6/30/2016

Wage Rate per Hour: $32.61
Supplemental Benefit Rate per Hour: $32.40
Supplemental Note: Overtime benefit rate - $45.28 per hour (time & one half), $58.15 per hour (double time).

Overtime Description

Time and one half the regular rate for Saturday for the first eight hours worked.
Double time the regular rate for Saturday for work performed in excess of eight hours.

Overtime

Time and one half the regular rate after an 8 hour day.
Double time the regular rate for Sunday.
Double time the regular rate for work on the following holiday(s).

Paid Holidays

New Year's Day
Lincoln's Birthday
President's Day
Memorial Day
Independence Day
Labor Day
Columbus Day
Veteran's Day
Thanksgiving Day
Christmas Day
Employees must work at least one day in the payroll week in which the holiday occurs to receive the paid holiday

(Operating Engineer Local #15-D)

ENGINEER - OPERATING

Operating Engineer - Road & Heavy Construction I

Back Filling Machines, Cranes, Mucking Machines and Dual Drum Paver.

Effective Period: 7/1/2015 - 6/30/2016
Wage Rate per Hour: $71.75
Supplemental Benefit Rate per Hour: $30.40
Supplemental Note: $55.10 overtime hours
Shift Wage Rate: $114.80

Operating Engineer - Road & Heavy Construction II

Backhoes, Power Shovels, Hydraulic Clam Shells, Steel Erection, Moles and machines of a similar nature.

Effective Period: 7/1/2015 - 6/30/2016
Wage Rate per Hour: $74.29

Supplemental Benefit Rate per Hour: $30.40
Supplemental Note: $55.10 overtime hours
Shift Wage Rate: $118.86

Operating Engineer - Road & Heavy Construction III

Mine Hoists, Cranes, etc. (Used as Mine Hoists)

Effective Period: 7/1/2015 - 6/30/2016
Wage Rate per Hour: $76.67
Supplemental Benefit Rate per Hour: $30.40
Supplemental Note: $55.10 overtime hours
Shift Wage Rate: $122.67

Operating Engineer - Road & Heavy Construction IV

Gradealls, Keystones, Cranes on land or water (with digging buckets), Bridge Cranes, Vermeer Cutter and machines of a similar nature, Trenching Machines.

Effective Period: 7/1/2015 - 6/30/2016
Wage Rate per Hour: $74.84
Supplemental Benefit Rate per Hour: $30.40
Supplemental Note: $55.10 overtime hours
Shift Wage Rate: $119.74

Operating Engineer - Road & Heavy Construction V

Pile Drivers & Rigs (employing Dock Builder foreperson): Derrick Boats, Tunnel Shovels.

Effective Period: 7/1/2015 - 6/30/2016
Wage Rate per Hour: $73.36
Supplemental Benefit Rate per Hour: $30.40
Supplemental Note: $55.10 overtime hours
Shift Wage Rate: $117.38

Operating Engineer - Road & Heavy Construction VI

Mixers (Concrete with loading attachment), Concrete Pavers, Cableways, Land Derricks, Power Houses (Low Air Pressure Units).

Effective Period: 7/1/2015 - 6/30/2016
Wage Rate per Hour: $69.69
Supplemental Benefit Rate per Hour: $30.40
Supplemental Note: $55.10 overtime hours
Shift Wage Rate: $111.50

Operating Engineer - Road & Heavy Construction VII

Barrier Movers , Barrier Transport and Machines of a Similar Nature.

Effective Period: 7/1/2015 - 6/30/2016
Wage Rate per Hour: $56.25
Supplemental Benefit Rate per Hour: $30.40
Supplemental Note: $55.10 overtime hours
Shift Wage Rate: $90.00

Operating Engineer - Road & Heavy Construction VIII

Utility Compressors

Effective Period: 7/1/2015 - 6/30/2016
Wage Rate per Hour: $43.63
Supplemental Benefit Rate per Hour: $30.40
Supplemental Note: $55.10 overtime hours
Shift Wage Rate: $55.03

Operating Engineer - Road & Heavy Construction IX

Horizontal Boring Rig

Effective Period: 7/1/2015 - 6/30/2016
Wage Rate per Hour: $66.26
Supplemental Benefit Rate per Hour: $30.40
Supplemental Note: $55.10 overtime hours
Shift Wage Rate: $106.02

Operating Engineer - Road & Heavy Construction X

Elevators (manually operated as personnel hoist).

Effective Period: 7/1/2015 - 6/30/2016
Wage Rate per Hour: $60.89
Supplemental Benefit Rate per Hour: $30.40
Supplemental Note: $55.10 overtime hours
Shift Wage Rate: $97.42

Operating Engineer - Road & Heavy Construction XI

Compressors (Portable 3 or more in battery), Driving of Truck Mounted Compressors, Well-point Pumps, Tugger Machines Well Point Pumps, Churn Drill.

Effective Period: 7/1/2015 - 6/30/2016
Wage Rate per Hour: $47.28
Supplemental Benefit Rate per Hour: $30.40
Supplemental Note: $55.10 overtime hours
Shift Wage Rate: $75.65

Operating Engineer - Road & Heavy Construction XII

All Drills and Machines of a similar nature.

Effective Period: 7/1/2015 - 6/30/2016
Wage Rate per Hour: $70.42
Supplemental Benefit Rate per Hour: $30.40
Supplemental Note: $55.10 overtime hours
Shift Wage Rate: $112.67

Operating Engineer - Road & Heavy Construction XIII

Concrete Pumps, Concrete Plant, Stone Crushers, Double Drum Hoist, Power Houses (other than above).

Effective Period: 7/1/2015 - 6/30/2016
Wage Rate per Hour: $68.19
Supplemental Benefit Rate per Hour: $30.40
Supplemental Note: $55.10 overtime hours
Shift Wage Rate: $109.10

Operating Engineer - Road & Heavy Construction XIV

Concrete Mixer

Effective Period: 7/1/2015 - 6/30/2016
Wage Rate per Hour: $65.20
Supplemental Benefit Rate per Hour: $30.40
Supplemental Note: $55.10 overtime hours
Shift Wage Rate: $104.32

Operating Engineer - Road & Heavy Construction XV

Compressors (Portable Single or two in Battery, not over 100 feet apart), Pumps (River Cofferdam) and Welding Machines, Push Button Machines, All Engines Irrespective of Power (Power-Pac) used to drive auxiliary equipment, Air, Hydraulic, etc.

Effective Period: 7/1/2015 - 6/30/2016
Wage Rate per Hour: $43.91
Supplemental Benefit Rate per Hour: $30.40
Supplemental Note: $55.10 overtime hours
Shift Wage Rate: $70.26

Operating Engineer - Road & Heavy Construction XVI

Concrete Breaking Machines, Hoists (Single Drum), Load Masters, Locomotives (over ten tons) and Dinkies over ten tons, Hydraulic Crane-Second Engineer.

Effective Period: 7/1/2015 - 6/30/2016
Wage Rate per Hour: $62.25
Supplemental Benefit Rate per Hour: $30.40
Supplemental Note: $55.10 overtime hours
Shift Wage Rate: $99.60

Operating Engineer - Road & Heavy Construction XVII

On-Site concrete plant engineer, On-site Asphalt Plant Engineer, and Vibratory console.

Effective Period: 7/1/2015 - 6/30/2016
Wage Rate per Hour: $62.74
Supplemental Benefit Rate per Hour: $30.40
Supplemental Note: $55.10 overtime hours
Shift Wage Rate: $100.38

Operating Engineer - Road & Heavy Construction XVIII

Tower Crane

Effective Period: 7/1/2015 - 6/30/2016
Wage Rate per Hour: $90.09
Supplemental Benefit Rate per Hour: $30.40
Supplemental Note: $55.10 overtime hours
Shift Wage Rate: $144.14

Operating Engineer - Paving I

Asphalt Spreaders, Autograde (C.M.I.), Roto/Mil

Effective Period: 7/1/2015 - 6/30/2016
Wage Rate per Hour: $69.69
Supplemental Benefit Rate per Hour: $30.40
Supplemental Note: $55.10 overtime hours
Shift Wage Rate: $111.50

Operating Engineer - Paving II

Asphalt Roller

Effective Period: 7/1/2015 - 6/30/2016
Wage Rate per Hour: $67.87
Supplemental Benefit Rate per Hour: $30.40
Supplemental Note: $55.10 overtime hours
Shift Wage Rate: $108.59

Operating Engineer - Paving III

Asphalt Plants

Effective Period: 7/1/2015 - 6/30/2016
Wage Rate per Hour: $57.40
Supplemental Benefit Rate per Hour: $30.40
Supplemental Note: $55.10 overtime hours
Shift Wage Rate: $91.84

Operating Engineer - Concrete I

Cranes

Effective Period: 7/1/2015 - 6/30/2016
Wage Rate per Hour: $74.51
Supplemental Benefit Rate per Hour: $30.40
Supplemental Note: $55.10 overtime hours

Operating Engineer - Concrete II

Compressors

Effective Period: 7/1/2015 - 6/30/2016
Wage Rate per Hour: $44.25
Supplemental Benefit Rate per Hour: $30.40
Supplemental Note: $55.10 overtime hours

Operating Engineer - Concrete III

Micro-traps (Negative Air Machines), Vac-All Remediation System.

Effective Period: 7/1/2015 - 6/30/2016
Wage Rate per Hour: $59.51
Supplemental Benefit Rate per Hour: $30.40
Supplemental Note: $55.10 overtime hours

Operating Engineer - Steel Erection I

Three Drum Derricks

Effective Period: 7/1/2015 - 6/30/2016
Wage Rate per Hour: $77.40
Supplemental Benefit Rate per Hour: $30.40
Supplemental Note: $55.10 overtime hours
Shift Wage Rate: $123.84

Operating Engineer - Steel Erection II

Cranes, 2 Drum Derricks, Hydraulic Cranes, Fork Lifts and Boom Trucks.

Effective Period: 7/1/2015 - 6/30/2016
Wage Rate per Hour: $74.37
Supplemental Benefit Rate per Hour: $30.40
Supplemental Note: $55.10 overtime hours
Shift Wage Rate: $118.99

Operating Engineer - Steel Erection III

Compressors, Welding Machines.

Effective Period: 7/1/2015 - 6/30/2016
Wage Rate per Hour: $44.09
Supplemental Benefit Rate per Hour: $30.40
Supplemental Note: $55.10 overtime hours
Shift Wage Rate: $70.54

Operating Engineer - Steel Erection IV

Compressors - Not Combined with Welding Machine.

Effective Period: 7/1/2015 - 6/30/2016
Wage Rate per Hour: $41.98
Supplemental Benefit Rate per Hour: $30.40
Supplemental Note: $55.10 overtime hours
Shift Wage Rate: $67.17

Operating Engineer - Building Work I

Forklifts, Plaster (Platform machine), Plaster Bucket, Concrete Pump and all other equipment used for hoisting material.

Effective Period: 7/1/2015 - 6/30/2016
Wage Rate per Hour: $61.27
Supplemental Benefit Rate per Hour: $30.40
Supplemental Note: $55.10 overtime hours

Operating Engineer - Building Work II

Compressors, Welding Machines (Cutting Concrete-Tank Work), Paint Spraying, Sandblasting, Pumps (with the exclusion of Concrete Pumps), All Engines irrespective of Power (Power-Pac) used to drive Auxiliary Equipment, Air, Hydraulic, Jacking System, etc.

Effective Period: 7/1/2015 - 6/30/2016
Wage Rate per Hour: $45.85
Supplemental Benefit Rate per Hour: $30.40
Supplemental Note: $55.10 overtime hours

Operating Engineer - Building Work III

Double Drum

Effective Period: 7/1/2015 - 6/30/2016
Wage Rate per Hour: $69.76
Supplemental Benefit Rate per Hour: $30.40
Supplemental Note: $55.10 overtime hours

Operating Engineer - Building Work IV

Stone Derrick, Cranes, Hydraulic Cranes Boom Trucks.

Effective Period: 7/1/2015 - 6/30/2016
Wage Rate per Hour: $73.91
Supplemental Benefit Rate per Hour: $30.40
Supplemental Note: $55.10 overtime hours

Operating Engineer - Building Work V

Dismantling and Erection of Cranes, Relief Engineer.

Effective Period: 7/1/2015 - 6/30/2016
Wage Rate per Hour: $68.09
Supplemental Benefit Rate per Hour: $30.40
Supplemental Note: $55.10 overtime hours

Operating Engineer - Building Work VI

4 Pole Hoist, Single Drum Hoists.

Effective Period: 7/1/2015 - 6/30/2016
Wage Rate per Hour: $67.37
Supplemental Benefit Rate per Hour: $30.40
Supplemental Note: $55.10 overtime hours

Operating Engineer - Building Work VII

Rack & Pinion and House Cars

Effective Period: 7/1/2015 - 6/30/2016
Wage Rate per Hour: $53.54
Supplemental Benefit Rate per Hour: $30.40
Supplemental Note: $55.10 overtime hours
For New House Car projects Wage Rate per Hour $42.70

Overtime Description

On jobs of more than one shift, if an Employee fails to report for work through any cause over which the Employer has no control, the Employee on duty will continue to work at the rate of single time.

For House Cars and Rack & Pinion only: Overtime paid at time and one-half for all hours in excess of eight hours in a day, Saturday, Sunday and Holidays worked.

Overtime

Double time the regular rate after an 8 hour day.
Double time the regular time rate for Saturday.
Double time the regular rate for Sunday.
Double time the regular rate for work on the following holiday(s).

Paid Holidays

New Year's Day

Lincoln's Birthday
President's Day
Memorial Day
Independence Day
Labor Day
Columbus Day
Veteran's Day
Thanksgiving Day
Day after Thanksgiving
Christmas Day
Employees must work at least one day in the payroll week in which the holiday occurs to receive the paid holiday

Shift Rates

For Steel Erection Only: Shifts may be worked at the single time rate at other than the regular working hours (8:00 A.M. to 4:30 P.M.) on the following work ONLY: Heavy construction jobs on work below the street level, over railroad tracks and on building jobs.

(Operating Engineer Local #14)

FLOOR COVERER

(Interior vinyl composition tile, sheath vinyl linoleum and wood parquet tile including site preparation and synthetic turf not including site preparation)

Floor Coverer

Effective Period: 7/1/2015 - 6/30/2016
Wage Rate per Hour: $50.50
Supplemental Benefit Rate per Hour: $45.88

Overtime

Time and one half the regular rate after an 8 hour day.
Time and one half the regular rate for Saturday.
Double time the regular rate for Sunday.

Overtime Holidays

Double time the regular rate for work on the following holiday(s).
New Year's Day
President's Day
Memorial Day
Independence Day
Labor Day
Columbus Day
Presidential Election Day
Thanksgiving Day
Day after Thanksgiving
Christmas Day

Paid Holidays
1/2 day on Christmas Eve if work is performed in the A.M.
1/2 day on New Year's Eve if work is performed in the A.M.

Shift Rates
Two shifts may be utilized with the first shift working 8:00 A.M. to the end of the shift at the straight time of pay. The second shift will receive one hour at double time rate for the last hour of the shift. (eight for seven, nine for eight).

(Carpenters District Council)

GLAZIER
(New Construction, Remodeling, and Alteration)

Glazier

Effective Period: 7/1/2015 - 10/31/2015
Wage Rate per Hour: $43.35
Supplemental Benefit Rate per Hour: $36.59
Supplemental Note: Supplemental Benefit Overtime Rate: $45.34

Effective Period: 11/1/2015 - 6/30/2016
Wage Rate per Hour: $43.95
Supplemental Benefit Rate per Hour: $36.84
Supplemental Note: Supplemental Benefit Overtime Rate: $45.59

Overtime Description
An optional 8th hour can be worked at straight time rate. If 9th hour is worked, then both hours or more (8th & 9th or more) will be at the double time rate of pay.

Overtime
Double time the regular rate after a 7 hour day.
Double time the regular time rate for Saturday.
Double time the regular rate for Sunday.

Overtime Holidays
Double time the regular rate for work on the following holiday(s).
New Year's Day
President's Day
Memorial Day
Independence Day
Labor Day
Thanksgiving Day
Day after Thanksgiving

Christmas Day

Paid Holidays
None

Shift Rates
Shifts shall be any 7 hours beyond 4:00 P.M. for which the glazier shall receive 8 hours pay for 7 hours worked.

(Local #1281)

GLAZIER - REPAIR & MAINTENANCE
(For the Installation of Glass - All repair and maintenance work on a particular building, whenever performed, where the total cumulative contract value is under $105,000. Except where enumerated (i.e. plate glass windows) does not apply to non-residential buildings.)

Craft Jurisdiction for repair, maintenance and fabrication

Plate glass replacement, Residential glass replacement, Residential mirrors and shower doors, Storm windows and storm doors, Residential replacement windows, Herculite door repairs, Door closer repairs, Retrofit apartment house (non commercial buildings), Glass tinting.

Effective Period: 7/1/2015 - 6/30/2016
Wage Rate per Hour: $23.68
Supplemental Benefit Rate per Hour: $19.54

Overtime
Time and one half the regular rate after an 8 hour day.
Double time the regular rate for Sunday.
Time and one half the regular hourly rate after 40 hours in any work week.

Paid Holidays
New Year's Day
President's Day
Memorial Day
Independence Day
Labor Day
Thanksgiving Day
Day after Thanksgiving
Christmas Day

(Local #1281)

HEAT AND FROST INSULATOR

Heat & Frost Insulator

Effective Period: 7/1/2015 - 6/30/2016
Wage Rate per Hour: $57.38
Supplemental Benefit Rate per Hour: $37.41

Overtime Description
Double time shall be paid for supplemental benefits during overtime work.
8th hour paid at time and one half.

Overtime
Double time the regular rate after an 8 hour day.
Double time the regular time rate for Saturday.
Double time the regular rate for Sunday.

Overtime Holidays
Double time the regular rate for work on the following holiday(s).
New Year's Day
Martin Luther King Jr. Day
President's Day
Memorial Day
Independence Day
Columbus Day
Veteran's Day
Thanksgiving Day
Day after Thanksgiving
Christmas Day

Triple time the regular rate for work on the following holiday(s).
Labor Day

Paid Holidays
None

Shift Rates
The first shift shall work seven hours at the regular straight time rate. The second and third shift shall work seven hours the regular straight time hourly rate plus a fourteen percent wage and benefit premium.
Off hour work in occupied or retail buildings may be worked on weekdays with an increment of $1.00 per hour and eight hours pay for seven (7) hours worked. Double time will apply for over seven (7) hours worked on weekdays, weekends or holidays.

(Local #12)

HOUSE WRECKER
(TOTAL DEMOLITION)

House Wrecker - Tier A

On all work sites the first, second, eleventh and every third House Wrecker thereafter will be Tier A House Wreckers (i.e. 1st, 2nd, 11th, 14th etc). Other House Wreckers may be Tier B House Wreckers.

Effective Period: 7/1/2015 - 6/30/2016
Wage Rate per Hour: $35.52
Supplemental Benefit Rate per Hour: $26.86

House Wrecker - Tier B

Effective Period: 7/1/2015 - 6/30/2016
Wage Rate per Hour: $24.90
Supplemental Benefit Rate per Hour: $19.88

Overtime
Time and one half the regular rate after an 8 hour day.
Time and one half the regular rate for Saturday.
Double time the regular rate for Sunday.

Overtime Holidays
Double time the regular rate for work on the following holiday(s).
New Year's Day
President's Day
Memorial Day
Independence Day
Labor Day
Thanksgiving Day
Christmas Day

Paid Holidays
None

(Mason Tenders District Council)

IRON WORKER - ORNAMENTAL

Iron Worker - Ornamental

Effective Period: 7/1/2015 - 6/30/2016
Wage Rate per Hour: $43.20
Supplemental Benefit Rate per Hour: $47.67
Supplemental Note: Supplemental benefits are to be paid at the applicable overtime rate when overtime is in effect.

Overtime Description
Time and one half the regular rate after a 7 hour day for a maximum of two hours on any regular work day (the 8th and 9th hour) and double time shall be paid for all work on a regular work day thereafter, time and one half the regular rate for Saturday for the first seven hours of work and double time shall be paid for all work on a Saturday thereafter.

Overtime
Double time the regular rate for Sunday.

Overtime Holidays
Double time the regular rate for work on the following holiday(s).
New Year's Day
President's Day
Memorial Day
Independence Day
Labor Day
Thanksgiving Day
Christmas Day

Paid Holidays
None

Shift Rates
For off shift work - 8 hours pay for 7 hours of work. When two or three shifts are employed on a job, Monday through Friday, the workday for each shift shall be seven hours and paid for ten and one-half hours at the single time rate. When two or three shifts are worked on Saturday, Sunday or holidays, each shift shall be seven hours and paid fifteen and three-quarters hours.

(Local #580)

IRON WORKER - STRUCTURAL

Iron Worker - Structural

Effective Period: 7/1/2015 - 6/30/2016
Wage Rate per Hour: $48.75
Supplemental Benefit Rate per Hour: $67.34
Supplemental Note: Supplemental benefits are to be paid at the applicable overtime rate when overtime is in effect.

Overtime Description

Monday through Friday- the first eight hours are paid at straight time, the 9th and 10th hours are paid at time and one-half the regular rate, all additional weekday overtime is paid at double the regular rate. Saturdays- the first eight hours are paid at time and one-half the regular rate, double time thereafter. Sunday-all shifts are paid at double time.

Overtime

Time and one half the regular rate after an 8 hour day.
Time and one half the regular rate for Saturday.
Double time the regular rate for Sunday.

Overtime Holidays

Double time the regular rate for work on the following holiday(s).
New Year's Day
Good Friday
Memorial Day
Independence Day
Labor Day
Thanksgiving Day
Christmas Day

Paid Holidays

1/2 day on Christmas Eve if work is performed in the A.M.
1/2 day on New Year's Eve if work is performed in the A.M.

Shift Rates

Monday through Friday - First Shift: First eight hours are paid at straight time, the 9th & 10th hours are paid at time and a half, double time paid thereafter. Second and third Shifts: First eight hours are paid at time and one-half, double time thereafter. Saturdays: All shifts, first eight hours paid at time and one-half, double time thereafter: Sunday all shifts are paid at double time.

(Local #40 & #361)

LABORER
(Foundation, Concrete, Excavating, Street Pipe Layer and Common)

Laborer

Excavation and foundation work for buildings, heavy construction, engineering work, and hazardous waste removal in connection with the above work. Landscaping tasks in connection with heavy construction work, engineering work and building projects. Projects include, but are not limited to pollution plants, sewers, parks, subways, bridges, highways, etc.

Effective Period: 7/1/2015 - 6/30/2016
Wage Rate per Hour: **$40.50**

Supplemental Benefit Rate per Hour: $36.53

Overtime

Time and one half the regular rate after an 8 hour day.
Time and one half the regular rate for Saturday.
Double time the regular rate for Sunday.

Overtime Holidays

Double time the regular rate for work on the following holiday(s).
New Year's Day
Memorial Day
Independence Day
Labor Day
Columbus Day
Presidential Election Day
Thanksgiving Day
Christmas Day

Paid Holidays

Labor Day
Thanksgiving Day

Shift Rates

When two shifts are employed, single time rate shall be paid for each shift. When three shifts are found necessary, each shift shall work seven and one half hours (7 ½), but shall be paid for eight (8) hours of labor, and be permitted one half hour for lunch.

(Local #731)

LANDSCAPING

(Landscaping tasks, as well as tree pruning, tree removing, spraying and maintenance in connection with the planting of street trees and the planting of trees in city parks but not when such activities are performed as part of, or in connection with, other construction or reconstruction projects.)

Landscaper (Above 6 years experience)

Effective Period: 7/1/2015 - 6/30/2016
Wage Rate per Hour: $27.00
Supplemental Benefit Rate per Hour: $14.55

Landscaper (3 - 6 years experience)

Effective Period: 7/1/2015 - 6/30/2016

Wage Rate per Hour: $26.00
Supplemental Benefit Rate per Hour: $14.55

Landscaper (up to 3 years experience)

Effective Period: 7/1/2015 - 6/30/2016
Wage Rate per Hour: $23.50
Supplemental Benefit Rate per Hour: $14.55

Groundperson

Effective Period: 7/1/2015 - 6/30/2016
Wage Rate per Hour: $23.50
Supplemental Benefit Rate per Hour: $14.55

Tree Remover / Pruner

Effective Period: 7/1/2015 - 6/30/2016
Wage Rate per Hour: $32.00
Supplemental Benefit Rate per Hour: $14.55

Landscaper Sprayer (Pesticide Applicator)

Effective Period: 7/1/2015 - 6/30/2016
Wage Rate per Hour: $22.00
Supplemental Benefit Rate per Hour: $14.55

Watering - Plant Maintainer

Effective Period: 7/1/2015 - 6/30/2016
Wage Rate per Hour: $17.00
Supplemental Benefit Rate per Hour: $14.55

Overtime Description

For all overtime work performed, supplemental benefits shall include an additional seventy-five ($0.75) cents per hour.

Overtime

Time and one half the regular rate after an 8 hour day.
Time and one half the regular rate for Saturday.
Double time the regular rate for Sunday.
Time and one half the regular rate for work on a holiday plus the day's pay.

Paid Holidays

New Year's Day
Memorial Day
Independence Day
Labor Day
Thanksgiving Day

Christmas Day

Shift Rates

Work performed on a 4pm to 12am shift has a 15% differential. Work performed on a 12am to 8am shift has a 20% differential.

(Local #175)

MARBLE MECHANIC

Marble Setter

Effective Period: 7/1/2015 - 12/31/2015
Wage Rate per Hour: $51.53
Supplemental Benefit Rate per Hour: $35.73

Effective Period: 1/1/2016 - 6/30/2016
Wage Rate per Hour: $51.89
Supplemental Benefit Rate per Hour: $36.62

Marble Finisher

Effective Period: 7/1/2015 - 12/31/2015
Wage Rate per Hour: $40.53
Supplemental Benefit Rate per Hour: $34.52

Effective Period: 1/1/2016 - 6/30/2016
Wage Rate per Hour: $40.80
Supplemental Benefit Rate per Hour: $35.15

Marble Polisher

Effective Period: 7/1/2015 - 12/31/2015
Wage Rate per Hour: $36.65
Supplemental Benefit Rate per Hour: $26.63

Effective Period: 1/1/2016 - 6/30/2016
Wage Rate per Hour: $37.02
Supplemental Benefit Rate per Hour: $27.01

Overtime Description

Supplemental Benefit contributions are to be made at the applicable overtime rates. Time and one half the regular rate after a 7 hour day or time and one half the regular rate after an 8 hour day - chosen by Employer at the start of the project and then would last for the full duration of the project.

Overtime
Time and one half the regular rate for Saturday.
Double time the regular rate for Sunday.

Overtime Holidays
Double time the regular rate for work on the following holiday(s).
New Year's Day
President's Day
Good Friday
Memorial Day
Independence Day
Labor Day
Columbus Day
Veteran's Day
Thanksgiving Day
Day after Thanksgiving
Christmas Day

Paid Holidays
None

(Local #7)

MASON TENDER

Mason Tender

Effective Period: 7/1/2015 - 6/30/2016
Wage Rate per Hour: $36.67
Supplemental Benefit Rate per Hour: $28.02

Overtime
Time and one half the regular rate after an 8 hour day.
Time and one half the regular rate for Saturday.
Double time the regular rate for Sunday.
Saturday may be used as a make-up day at straight time when a day is lost during that week to inclement weather.

Overtime Holidays
Double time the regular rate for work on the following holiday(s).
New Year's Day
President's Day
Memorial Day
Independence Day
Labor Day
Thanksgiving Day
Christmas Day

Paid Holidays
None

Shift Rates
The Employer may work two (2) shifts with the first shift at the straight time wage rate and the second shift receiving eight (8) hours paid for seven (7) hours work at the straight time wage rate.

(Local #79)

MASON TENDER (INTERIOR DEMOLITION WORKER)
(The erection, building, moving, servicing and dismantling of enclosures, scaffolding, barricades, protection and site safety structures etc., on Interior Demolition jobs.)

Mason Tender Tier A

Effective Period: 7/1/2015 - 6/30/2016
Wage Rate per Hour: $35.46
Supplemental Benefit Rate per Hour: $22.13

Mason Tender Tier B

On Interior Demolition job sites 33 1/3 % of the employees shall be classified as Tier A Interior Demolition Workers and 66 2/3 % shall be classified as Tier B Interior Demolition Workers; provided that the employer may employ more than 33 1/3 % Tier A Interior Demolition Workers on the job site. Where the number of employees on a job site is not divisible by 3, the first additional employee (above the number of employees divisible by three) shall be a Tier B Interior Demolition Worker, and the second additional employee shall be a Tier A Interior Demolition Worker.

Effective Period: 7/1/2015 - 6/30/2016
Wage Rate per Hour: $24.65
Supplemental Benefit Rate per Hour: $16.45

Overtime
Time and one half the regular rate after an 8 hour day.
Time and one half the regular rate for Sunday.

Overtime Holidays
Double time the regular rate for work on the following holiday(s).
New Year's Day
President's Day
Memorial Day
Independence Day

Labor Day
Thanksgiving Day
Christmas Day

Paid Holidays
None

(Local #79)

METALLIC LATHER

Metallic Lather

Effective Period: 7/1/2015 - 6/30/2016
Wage Rate per Hour: $43.63
Supplemental Benefit Rate per Hour: $41.57
Supplemental Note: Supplemental benefits for overtime are paid at the appropriate overtime rate.

Overtime Description
Overtime would be time and one half the regular rate after a seven (7) or eight (8) hours workday, which would be set at the start of the job.

Overtime
Time and one half the regular rate for Saturday.
Double time the regular rate for Sunday.

Overtime Holidays
Double time the regular rate for work on the following holiday(s).
New Year's Day
Washington's Birthday
Good Friday
Memorial Day
Independence Day
Labor Day
Columbus Day
Presidential Election Day
Thanksgiving Day
Christmas Day

Paid Holidays
1/2 day on Christmas Eve if work is performed in the A.M.
1/2 day on New Year's Eve if work is performed in the A.M.

Shift Rates
There shall be either two (2) or three (3) shifts, each shift shall be eight (8) hours with nine (9) hours pay, including one half (½) hour for lunch. Off-Hour Start shall commence after 3:30 P.M. and shall conclude by 6:00

A.M. The first consecutive seven (7) hours shall be at straight time with a differential of twelve dollars ($12.00) per hour. Fringes shall be paid at the straight time rate.

(Local #46)

MILLWRIGHT

Millwright

Effective Period: 7/1/2015 - 6/30/2016
Wage Rate per Hour: $49.50
Supplemental Benefit Rate per Hour: $52.01

Overtime
Time and one half the regular rate after an 8 hour day.
Time and one half the regular rate for Saturday.
Double time the regular rate for Sunday.
Saturday may be used as a make-up day at straight time when a day is lost during that week to inclement weather.

Overtime Holidays
Double time the regular rate for work on the following holiday(s).
New Year's Day
President's Day
Good Friday
Memorial Day
Independence Day
Labor Day
Columbus Day
Presidential Election Day
Thanksgiving Day
Christmas Day

Paid Holidays
1/2 day on Christmas Eve if work is performed in the A.M.
1/2 day on New Year's Eve if work is performed in the A.M.

Shift Rates
The first shift shall receive the straight time rate of pay. The second shift receives the straight time rate of pay plus fifteen (15%) per cent. Members of the second shift shall be allowed one half hour to eat, with this time being included in the hours of the workday established. There must be a first shift to work a second shift. All additional hours worked shall be paid at the time and one-half rate of pay plus fifteen (15%) per cent for weekday hours.

(Local #740)

MOSAIC MECHANIC

Mosaic Mechanic - Mosaic & Terrazzo Mechanic

Effective Period: 7/1/2015 - 6/30/2016
Wage Rate per Hour: $45.91
Supplemental Benefit Rate per Hour: $38.15
Supplemental Note: Supplemental benefits for overtime to be paid at the rate of $48.92 per hour.

Mosaic Mechanic - Mosaic & Terrazzo Finisher

Effective Period: 7/1/2015 - 6/30/2016
Wage Rate per Hour: $44.30
Supplemental Benefit Rate per Hour: $38.14
Supplemental Note: Supplemental benefits for overtime to be paid at the rate of $48.91 per hour.

Mosaic Mechanic - Machine Operator Grinder

Effective Period: 7/1/2015 - 6/30/2016
Wage Rate per Hour: $44.30
Supplemental Benefit Rate per Hour: $38.14
Supplemental Note: Supplemental benefits for overtime to be paid at the rate of $48.91 per hour.

Overtime

Time and one half the regular rate after a 7 hour day.
Time and one half the regular rate for Saturday.
Double time the regular rate for Sunday.

Overtime Holidays

Double time the regular rate for work on the following holiday(s).
New Year's Day
Washington's Birthday
Good Friday
Independence Day
Labor Day
Columbus Day
Veteran's Day
Thanksgiving Day
Day after Thanksgiving
Christmas Day

Paid Holidays

None

(Local #7)

PAINTER

Painter - Brush & Roller

Effective Period: 7/1/2015 - 6/30/2016
Wage Rate per Hour: $41.00
Supplemental Benefit Rate per Hour: $26.37
Supplemental Note: $31.00 on overtime

Spray & Scaffold / Decorative / Sandblast

Effective Period: 7/1/2015 - 6/30/2016
Wage Rate per Hour: $44.00
Supplemental Benefit Rate per Hour: $26.37
Supplemental Note: $31.00 on overtime

Overtime
Time and one half the regular rate after a 7 hour day.
Time and one half the regular rate for Saturday.
Time and one half the regular rate for Sunday.

Overtime Holidays
Time and one half the regular rate for work on the following holiday(s).
New Year's Day
President's Day
Memorial Day
Independence Day
Labor Day
Columbus Day
Thanksgiving Day
Christmas Day

Paid Holidays
None

(District Council of Painters #9)

PAINTER - SIGN

Designer

Effective Period: 7/1/2015 - 6/30/2016
Wage Rate per Hour: $40.30
Supplemental Benefit Rate per Hour: $7.22

Journeyperson

Effective Period: 7/1/2015 - 6/30/2016
Wage Rate per Hour: $37.48
Supplemental Benefit Rate per Hour: $7.22

Overtime

Time and one half the regular rate after an 8 hour day.
Time and one half the regular rate for Saturday.
Time and one half the regular rate for Sunday.
Double time the regular rate for work on the following holiday(s).

Paid Holidays

New Year's Day
Martin Luther King Jr. Day
Memorial Day
Independence Day
Labor Day
Thanksgiving Day
Day after Thanksgiving
Christmas Day
Two (2) additional holidays as floating holidays

(Local #8A-28A)

PAINTER - STRIPER

Striper (paint)

Effective Period: 7/1/2015 - 6/30/2016
Wage Rate per Hour: $35.00
Supplemental Benefit Rate per Hour: $12.27
Supplemental Note: Overtime Supplemental Benefit rate - $8.02 New Hire Rate (0-3 months) - $0.00

Lineperson (thermoplastic)

Effective Period: 7/1/2015 - 6/30/2016
Wage Rate per Hour: $39.00
Supplemental Benefit Rate per Hour: $12.27
Supplemental Note: Overtime Supplemental Benefit rate - $8.02; New Hire Rate (0-3 months) - $0.00

Overtime

Time and one half the regular rate after an 8 hour day.
Time and one half the regular rate for Saturday.
Double time the regular rate for Sunday.
Time and one half the regular rate for work on the following holiday(s).

Paid Holidays

New Year's Day
Good Friday
Memorial Day
Independence Day
Labor Day
Columbus Day
Presidential Election Day
Thanksgiving Day
Day after Thanksgiving
Christmas Day

Shift Rates

Employees hired before April 1, 2003: 15% night shift premium differential for work commenced at 9:00 PM or later.

Vacation

Employees with one to two years service shall accrue vacation based on hours worked: 250 hours worked - 1 day vacation; 500 hours worked - 2 days vacation; 750 hours worked - 3 days vacation; 900 hours worked - 4 days vacation; 1,000 hours worked - 5 days vacation. Employees with two to five years service receive two weeks vacation. Employees with five to twenty years service receive three weeks vacation. Employees with twenty to twenty-five years service receive four weeks vacation. Employees with 25 or more years service receive five weeks vacation. Vacation must be taken during winter months. 2 Personal Days except employees hired after 4/1/12 who do not have 2 years of service.

(Local #917)

PAINTER - STRUCTURAL STEEL

Painters on Structural Steel

Effective Period: 7/1/2015 - 9/30/2015
Wage Rate per Hour: $48.00
Supplemental Benefit Rate per Hour: $34.58

Effective Period: 10/1/2015 - 6/30/2016
Wage Rate per Hour: $49.00
Supplemental Benefit Rate per Hour: $36.08

Painter - Power Tool

Effective Period: 7/1/2015 - 9/30/2015
Wage Rate per Hour: $54.00
Supplemental Benefit Rate per Hour: $34.58

Effective Period: 10/1/2015 - 6/30/2016
Wage Rate per Hour: $55.00
Supplemental Benefit Rate per Hour: $36.08

Overtime Description
Supplemental Benefits shall be paid for each hour worked, up to forty (40) hours per week for the period of May 1st to November 15th or up to fifty (50) hours per week for the period of November 16th to April 30th.

Overtime
Time and one half the regular rate after a 7 hour day.
Time and one half the regular rate for Saturday.
Time and one half the regular rate for Sunday.

Overtime Holidays
Double time the regular rate for work on the following holiday(s).
New Year's Day
Memorial Day
Independence Day
Labor Day
Thanksgiving Day
Christmas Day

Paid Holidays
None

Shift Rates
Regular hourly rates plus a ten per cent (10%) differential

(Local #806)

PAPERHANGER

Paperhanger

Effective Period: 7/1/2015 - 6/30/2016
Wage Rate per Hour: $41.08
Supplemental Benefit Rate per Hour: $29.23
Supplemental Note: Supplemental benefits are to be paid at the appropriate straight time and overtime rate.

Overtime
Time and one half the regular rate after a 7 hour day.

Time and one half the regular rate for Saturday.
Time and one half the regular rate for Sunday.

Overtime Holidays

Time and one half the regular rate for work on the following holiday(s).
New Year's Day
President's Day
Memorial Day
Independence Day
Labor Day
Thanksgiving Day
Day after Thanksgiving
Christmas Day

Paid Holidays

None

Shift Rates

Evening shift - 4:30 P.M. to 12:00 Midnight (regular rate of pay); any work performed before 7:00 A.M. shall be at time and one half the regular base rate of pay.

(District Council of Painters #9)

PAVER AND ROADBUILDER

Paver & Roadbuilder - Formsetter

Effective Period: 7/1/2015 - 6/30/2016
Wage Rate per Hour: $44.85
Supplemental Benefit Rate per Hour: $36.92

Paver & Roadbuilder - Laborer

Paving and road construction work, regardless of material used, including but not limited to preparation of job sites, removal of old surfaces, asphalt and/or concrete, by whatever method, including but not limited to milling; laying of concrete; laying of asphalt for temporary, patchwork, and utility paving (but not production paving); site preparation and incidental work before the installation of rubberized materials and similar surfaces; installation and repair of temporary construction fencing; slurry seal coating, maintenance of safety surfaces; play equipment installation, and other related work.

Effective Period: 7/1/2015 - 6/30/2016
Wage Rate per Hour: $40.98
Supplemental Benefit Rate per Hour: $36.92

Production Paver & Roadbuilder - Screed Person

(Production paving is asphalt paving when using a paving machine or on a project where a paving machine is traditionally used)

Adjustment of paving machinery on production paving jobs.

Effective Period: 7/1/2015 - 6/30/2016
Wage Rate per Hour: $45.45
Supplemental Benefit Rate per Hour: $36.92

Production Paver & Roadbuilder - Raker

Effective Period: 7/1/2015 - 6/30/2016
Wage Rate per Hour: $44.85
Supplemental Benefit Rate per Hour: $36.92

Production Paver & Roadbuilder - Shoveler

General laborer (except removal of surfaces - see Paver and Roadbuilder-Laborer) including but not limited to tamper, AC paint and liquid tar work.

Effective Period: 7/1/2015 - 6/30/2016
Wage Rate per Hour: $41.56
Supplemental Benefit Rate per Hour: $36.92

Overtime Description

Veteran's Day is a Paid Holiday for employees working on production paving.

If an employee works New Year's Day or Christmas Day, they receive the single time rate plus 25%.

Employees who work on a holiday listed below receive the straight time rate plus one day's pay for the holiday.

Overtime

Time and one half the regular rate after an 8 hour day.
Time and one half the regular rate for Saturday.
Double time the regular rate for Sunday.

Paid Holidays

Memorial Day
Independence Day
Labor Day
Presidential Election Day
Thanksgiving Day

Shift Rates

When two shifts are employed, the work period for each shift shall be a continuous eight (8) hours. When three shifts are employed, each shift will work seven and one half (7 ½) hours but will be paid for eight (8) hours since only one half (1/2) hour is allowed for meal time.
When two or more shifts are employed, single time will be paid for each shift.

Night Work - On night work, the first eight (8) hours of work will be paid for at the single time rate, except that production paving work shall be paid at 15% over the single time rate for the screed person, rakers and

shovelers directly involved only. All other workers will be exempt. Hours worked over eight (8) hours during said shift shall be paid for at the time and one-half rate.

(Local #1010)

PLASTERER

Plasterer

Effective Period: 7/1/2015 - 6/30/2016
Wage Rate per Hour: $43.43
Supplemental Benefit Rate per Hour: $27.95

Overtime
Time and one half the regular rate after a 7 hour day.
Time and one half the regular rate for Saturday.
Double time the regular rate for Sunday.
Saturday may be used as a make-up day at straight time when a day is lost during that week to inclement weather.

Overtime Holidays
Double time the regular rate for work on the following holiday(s).
New Year's Day
Martin Luther King Jr. Day
President's Day
Good Friday
Memorial Day
Independence Day
Labor Day
Columbus Day
Presidential Election Day
Thanksgiving Day
Christmas Day

Paid Holidays
None

Shift Rates
When it is not possible to conduct alteration work during regular work hours, in a building occupied by tenants, said work shall proceed on a shift basis: however work over seven (7) hours in any twenty four (24) hour period, the time after seven (7) hours shall be considered overtime.
The second shift shall start at a time between 3:30 p.m. and 7:00 p.m. and shall consist of seven (7) working hours and shall receive eight (8) hours of wages and benefits at the straight time rate. The workers on the second shift shall be allowed one-half (½) hour to eat with this time being included in the seven (7) hours of work.

(Local #530)

PLASTERER - TENDER

Plasterer - Tender

Effective Period: 7/1/2015 - 6/30/2016
Wage Rate per Hour: $36.67
Supplemental Benefit Rate per Hour: $28.02

Overtime
Time and one half the regular rate after an 8 hour day.
Time and one half the regular rate for Saturday.
Double time the regular rate for Sunday.
Saturday may be used as a make-up day at straight time when a day is lost during that week to inclement weather.

Overtime Holidays
Double time the regular rate for work on the following holiday(s).
New Year's Day
Washington's Birthday
Memorial Day
Independence Day
Labor Day
Presidential Election Day
Thanksgiving Day
Christmas Day

Paid Holidays
None

Shift Rates
When work commences outside regular work hours, workers receive an hour additional (differential) wage and supplement payment. Eight hours pay for seven hours work or nine hours pay for eight hours work.

(Mason Tenders District Council)

PLUMBER

Plumber

Effective Period: 7/1/2015 - 6/30/2016

Wage Rate per Hour: $65.27
Supplemental Benefit Rate per Hour: $28.38
Supplemental Note: Overtime supplemental benefit rate per hour: $56.48

Plumber - Temporary Services

Temporary Services - When there are no Plumbers on the job site, there may be three shifts designed to cover the entire twenty-four hour period, including weekends if necessary, at the following rate straight time.

Effective Period: 7/1/2015 - 6/30/2016
Wage Rate per Hour: $52.24
Supplemental Benefit Rate per Hour: $22.28

Overtime Description

Double time the regular rate after a 7 hour day - unless for new construction site work where the plumbing contract price is $1.5 million or less, the hours of labor can be 8 hours per day at the employers option. On Alteration jobs when other mechanical trades at the site are working an eighth hour at straight time, then the plumber shall also work an eighth hour at straight time.

Overtime

Double time the regular time rate for Saturday.
Double time the regular rate for Sunday.

Overtime Holidays

Double time the regular rate for work on the following holiday(s).
New Year's Day
President's Day
Memorial Day
Independence Day
Labor Day
Columbus Day
Veteran's Day
Thanksgiving Day
Day after Thanksgiving
Christmas Day

Shift Rates

Shift work, when directly specified in public agency or authority documents where plumbing contract is $8 million or less, will be permitted. 30% shift premium shall be paid for wages and fringe benefits for 4:00 pm and midnight shifts Monday to Friday. 50% shift premium shall be paid for wages and fringe benefits for 4:00 pm and midnight shift work performed on weekends. For shift work on holidays, double time wages and fringe benefits shall be paid.

(Plumbers Local #1)

PLUMBER (MECHNICAL EQUIPMENT AND SERVICE)

(Mechanical Equipment and Service work shall include any repair and/or replacement of the present plumbing system.)

Plumber

Effective Period: 7/1/2015 - 6/30/2016
Wage Rate per Hour: $39.27
Supplemental Benefit Rate per Hour: $13.34

Overtime

Time and one half the regular rate after an 8 hour day.
Time and one half the regular rate for Saturday.
Time and one half the regular rate for Sunday.

Overtime Holidays

Time and one half the regular rate for work on the following holiday(s).
New Year's Day
President's Day
Memorial Day
Independence Day
Thanksgiving Day
Day after Thanksgiving
Christmas Day

Paid Holidays

None

(Plumbers Local # 1)

PLUMBER (RESIDENTIAL RATES FOR 1, 2 AND 3 FAMILY HOME CONSTRUCTION)

Effective Period: 7/1/2015 - 6/30/2016
Wage Rate per Hour: $45.19
Supplemental Benefit Rate per Hour: $20.62

Overtime

Double time the regular rate after an 8 hour day.
Double time the regular time rate for Saturday.
Double time the regular rate for Sunday.

Overtime Holidays

Double time the regular rate for work on the following holiday(s).
New Year's Day
President's Day
Memorial Day
Independence Day
Labor Day
Columbus Day
Veteran's Day
Thanksgiving Day
Day after Thanksgiving
Christmas Day

Paid Holidays
None

Shift Rates
30% shift premium shall be paid for wages and fringe benefits for 4:00 pm and midnight shifts Monday to Friday. 50% shift premium shall be paid for wages and fringe benefits for 4:00 pm and midnight shift work performed on weekends. For shift work on holidays, double time wages and fringe benefits shall be paid.

(Plumbers Local #1)

PLUMBER: PUMP & TANK
Oil Trades (Installation and Maintenance)

Plumber - Pump & Tank

Effective Period: 7/1/2015 - 6/30/2016
Wage Rate per Hour: $62.83
Supplemental Benefit Rate per Hour: $21.37

Overtime
Time and one half the regular rate after an 8 hour day.
Time and one half the regular rate for Saturday.
Time and one half the regular rate for Sunday.

Overtime Holidays
Time and one half the regular rate for work on the following holiday(s).
New Year's Day
President's Day
Memorial Day
Independence Day
Labor Day
Columbus Day
Veteran's Day
Thanksgiving Day

Day after Thanksgiving
Christmas Day

Paid Holidays
None

Shift Rates
All work outside the regular workday (8:00 A.M. to 3:30 P.M.) is to be paid at time and one half the regular hourly rate

(Plumbers Local #1)

POINTER - WATERPROOFER, CAULKER MECHANIC (EXTERIOR BUILDING RENOVATION)

Pointer - Waterproofer, Caulker Mechanic

Effective Period: 7/1/2015 - 6/30/2016
Wage Rate per Hour: $47.41
Supplemental Benefit Rate per Hour: $24.40

Overtime
Time and one half the regular rate after an 8 hour day.
Time and one half the regular rate for Saturday.
Time and one half the regular rate for Sunday.
Saturday may be used as a make-up day at straight time when a day is lost during that week to inclement weather.

Overtime Holidays
Time and one half the regular rate for work on the following holiday(s).
New Year's Day
Martin Luther King Jr. Day
President's Day
Memorial Day
Independence Day
Labor Day
Thanksgiving Day
Christmas Day

Paid Holidays
None

Shift Rates
All work outside the regular work day (an eight hour workday between the hours of 6:00 A.M. and 4:30 P.M.) is to be paid at time and one half the regular rate.

(Bricklayer District Council)

ROOFER

Roofer

Effective Period: 7/1/2015 - 6/30/2016
Wage Rate per Hour: $40.70
Supplemental Benefit Rate per Hour: $30.17

Overtime
Time and one half the regular rate after an 8 hour day.
Time and one half the regular rate for Saturday.
Time and one half the regular rate for Sunday.

Overtime Holidays
Time and one half the regular rate for work on the following holiday(s).
New Year's Day
President's Day
Memorial Day
Independence Day
Labor Day
Presidential Election Day
Thanksgiving Day
Christmas Day

Paid Holidays
None

Shift Rates
Second shift - Regular hourly rate plus a 10% differential. Third shift - Regular hourly rate plus a 15% differential.

(Local #8)

SANDBLASTER - STEAMBLASTER
(Exterior Building Renovation)

Sandblaster / Steamblaster

Effective Period: 7/1/2015 - 6/30/2016

Wage Rate per Hour: $47.41
Supplemental Benefit Rate per Hour: $24.40

Overtime

Time and one half the regular rate after an 8 hour day.
Time and one half the regular rate for Saturday.
Time and one half the regular rate for Sunday.
Saturday may be used as a make-up day at straight time when a day is lost during that week to inclement weather.

Overtime Holidays

Time and one half the regular rate for work on the following holiday(s).
New Year's Day
Martin Luther King Jr. Day
President's Day
Memorial Day
Independence Day
Labor Day
Thanksgiving Day
Christmas Day

Paid Holidays

None

Shift Rates

All work outside the regular work day (an eight hour workday between the hours of 6:00 A.M. and 4:30 P.M.) is to be paid at time and one half the regular rate.

(Bricklayer District Council)

SHEET METAL WORKER

Sheet Metal Worker

Effective Period: 7/1/2015 - 6/30/2016
Wage Rate per Hour: $46.96
Supplemental Benefit Rate per Hour: $45.19
Supplemental Note: Supplemental benefit contributions are to be made at the applicable overtime rates.

Sheet Metal Worker - Fan Maintenance

(The temporary operation of fans or blowers in new or existing buildings for heating and/or ventilation, and/or air conditioning prior to the completion of the project.)

Effective Period: 7/1/2015 - 6/30/2016
Wage Rate per Hour: $37.57

Supplemental Benefit Rate per Hour: $45.19

Sheet Metal Worker - Duct Cleaner

Effective Period: 7/1/2015 - 6/30/2016
Wage Rate per Hour: $12.90
Supplemental Benefit Rate per Hour: $8.07

Overtime
Time and one half the regular rate after a 7 hour day.
Time and one half the regular rate for Saturday.
Double time the regular rate for Sunday.

Overtime Holidays
Double time the regular rate for work on the following holiday(s).
New Year's Day
Martin Luther King Jr. Day
President's Day
Memorial Day
Independence Day
Labor Day
Columbus Day
Veteran's Day
Thanksgiving Day
Day after Thanksgiving
Christmas Day

Paid Holidays
None

Shift Rates
Work that can only be performed outside regular working hours (seven hours of work between 7:30 A.M. and 3:30 P.M.) - First shift (work between 3:30 P.M. and 11:30 P.M.) - 10% differential above the established hourly rate. Second shift (work between 11:30 P.M. and 7:30 A.M.) - 15% differential above the established hourly rate.

For Fan Maintenance: On all full shifts of fan maintenance work the straight time hourly rate of pay will be paid for each shift, including nights, Saturdays, Sundays, and holidays.

(Local #28)

SHEET METAL WORKER - SPECIALTY
(Decking & Siding)

Sheet Metal Specialty Worker

The first worker to perform this work must be paid at the rate of the Sheet Metal Worker. The second and third workers shall be paid the Specialty Worker Rate. The ratio of One Sheet Metal Worker, then Two Specialty Workers shall be utilized thereafter.

Effective Period: 7/1/2015 - 6/30/2016
Wage Rate per Hour: $42.64
Supplemental Benefit Rate per Hour: $23.62
Supplemental Note: Supplemental benefit contributions are to be made at the applicable overtime rates.

Overtime

Time and one half the regular rate after an 8 hour day.
Time and one half the regular rate for Saturday.
Double time the regular rate for Sunday.

Overtime Holidays

Double time the regular rate for work on the following holiday(s).
New Year's Day
Martin Luther King Jr. Day
President's Day
Memorial Day
Independence Day
Labor Day
Columbus Day
Veteran's Day
Thanksgiving Day
Christmas Day

Paid Holidays

None

(Local #28)

SHIPYARD WORKER

Shipyard Mechanic - First Class

Effective Period: 7/1/2015 - 6/30/2016
Wage Rate per Hour: $27.54
Supplemental Benefit Rate per Hour: $3.01

Shipyard Mechanic - Second Class

Effective Period: 7/1/2015 - 6/30/2016
Wage Rate per Hour: $20.22
Supplemental Benefit Rate per Hour: $2.73

Shipyard Laborer - First Class

Effective Period: 7/1/2015 - 6/30/2016
Wage Rate per Hour: $20.90
Supplemental Benefit Rate per Hour: $2.75

Shipyard Laborer - Second Class

Effective Period: 7/1/2015 - 6/30/2016
Wage Rate per Hour: $13.86
Supplemental Benefit Rate per Hour: $2.48

Shipyard Dockhand - First Class

Effective Period: 7/1/2015 - 6/30/2016
Wage Rate per Hour: $23.61
Supplemental Benefit Rate per Hour: $2.86

Shipyard Dockhand - Second Class

Effective Period: 7/1/2015 - 6/30/2016
Wage Rate per Hour: $15.94
Supplemental Benefit Rate per Hour: $2.56

Overtime Description

Work performed on holiday is paid double time the regular hourly wage rate plus holiday pay.

Overtime

Time and one half the regular rate after an 8 hour day.
Time and one half the regular rate for Saturday.
Double time the regular rate for Sunday.
Time and one half the regular hourly rate after 40 hours in any work week.

Paid Holidays

New Year's Day
Martin Luther King Jr. Day
President's Day
Good Friday
Memorial Day
Independence Day
Labor Day
Thanksgiving Day
Day after Thanksgiving
Christmas Day

Based on Survey Data

SIGN ERECTOR
(Sheet Metal, Plastic, Electric, and Neon)

Sign Erector

Effective Period: 7/1/2015 - 6/30/2016
Wage Rate per Hour: $45.60
Supplemental Benefit Rate per Hour: $46.28

Overtime
Time and one half the regular rate after a 7 hour day.
Time and one half the regular rate for Saturday.
Time and one half the regular rate for Sunday.
Time and one half the regular rate for work on the following holiday(s).

Paid Holidays
New Year's Day
Washington's Birthday
Memorial Day
Independence Day
Labor Day
Columbus Day
Election Day
Thanksgiving Day
Day after Thanksgiving
Christmas Day

Shift Rates
Time and one half the regular hourly rate is to be paid for all hours worked outside the regular workday either (7:00 A.M. through 2:30 P.M.) or (8:00 A.M. through 3:30 P.M.)

(Local #137)

STEAMFITTER

Steamfitter I

Effective Period: 7/1/2015 - 6/30/2016
Wage Rate per Hour: $55.00
Supplemental Benefit Rate per Hour: $52.79
Supplemental Note: Overtime supplemental benefit rate: $104.84

Steamfitter -Temporary Services

The steamfitters shall not do any other work and shall not be permitted to work more than one shift in a twenty-four hour day. When steamfitters are present during the regular working day, no temporary services steamfitter will be required

Effective Period: 7/1/2015 - 6/30/2016
Wage Rate per Hour: $41.80
Supplemental Benefit Rate per Hour: $42.76
Supplemental Note: .

Overtime

Double time the regular rate after a 7 hour day.
Double time the regular time rate for Saturday.
Double time the regular rate for Sunday.

Overtime Holidays

Double time the regular rate for work on the following holiday(s).
New Year's Day
President's Day
Memorial Day
Independence Day
Labor Day
Columbus Day
Veteran's Day
Thanksgiving Day
Day after Thanksgiving
Christmas Day

Paid Holidays

None

Shift Rates

Work performed between 3:30 P.M. and 7:00 A.M. and on Saturdays, Sundays and Holidays shall be at double time the regular hourly rate and paid at the overtime supplemental benefit rate above.

Steamfitter II

For heating, ventilation, air conditioning and mechanical public works contracts with a dollar value not to exceed $15,000,000 and for fire protection/sprinkler public works contracts not to exceed $1,500,000.

Effective Period: 7/1/2015 - 6/30/2016
Wage Rate per Hour: $55.00
Supplemental Benefit Rate per Hour: $52.79
Supplemental Note: Overtime supplemental benefit rate: $104.84

Steamfitter -Temporary Services

The steamfitters shall not do any other work and shall not be permitted to work more than one shift in a twenty-four hour day. When steamfitters are present during the regular working day, no temporary services steamfitter will be required.

Effective Period: 7/1/2015 - 6/30/2016
Wage Rate per Hour: $41.80
Supplemental Benefit Rate per Hour: $42.76

Overtime

Double time the regular rate after an 8 hour day.
Double time the regular time rate for Saturday.
Double time the regular rate for Sunday.

Overtime Holidays

Double time the regular rate for work on the following holiday(s).
New Year's Day
President's Day
Memorial Day
Independence Day
Labor Day
Columbus Day
Veteran's Day
Thanksgiving Day
Day after Thanksgiving
Christmas Day

Paid Holidays

None

Shift Rates

May be performed outside of the regular workday except Saturday, Sunday and Holidays. A shift shall consist of eight working hours. All work performed in excess of eight hours shall be paid at double time. No shift shall commence after 7:00 P.M. on Friday or 7:00 P.M. the day before holidays. All work performed after 12:01 A.M. Saturday or 12:01 A.M. the day before a Holiday will be paid at double time. When shift work is performed the wage rate for regular time worked is a thirty percent premium together with fringe benefits.

On Transit Authority projects, where work is performed in the vicinity of tracks all shift work on weekends and holidays may be performed at the regular shift rates.

Local #638

STEAMFITTER - REFRIGERATION AND AIR CONDITIONER
(Maintenance and Installation Service Person)

Refrigeration and Air Conditioner Mechanic

Effective Period: 7/1/2015 - 6/30/2016
Wage Rate per Hour: $39.25
Supplemental Benefit Rate per Hour: $13.81

Refrigeration and Air Conditioner Service Person V

Effective Period: 7/1/2015 - 6/30/2016
Wage Rate per Hour: $32.25
Supplemental Benefit Rate per Hour: $12.44

Refrigeration and Air Conditioner Service Person IV

Effective Period: 7/1/2015 - 6/30/2016
Wage Rate per Hour: $26.72
Supplemental Benefit Rate per Hour: $11.30

Refrigeration and Air Conditioner Service Person III

Filter changing and maintenance thereof, oil and greasing, tower and coil cleaning, scraping and painting, general housekeeping, taking of water samples.

Effective Period: 7/1/2015 - 6/30/2016
Wage Rate per Hour: $22.93
Supplemental Benefit Rate per Hour: $10.45

Refrigeration and Air Conditioner Service Person II

Filter changing and maintenance thereof, oil and greasing, tower and coil cleaning, scraping and painting, general housekeeping, taking of water samples.

Effective Period: 7/1/2015 - 6/30/2016
Wage Rate per Hour: $19.02
Supplemental Benefit Rate per Hour: $9.67

Refrigeration and Air Conditioner Service Person I

Filter changing and maintenance thereof, oil and greasing, tower and coil cleaning, scraping and painting, general housekeeping, taking of water samples.

Effective Period: 7/1/2015 - 6/30/2016
Wage Rate per Hour: $13.91
Supplemental Benefit Rate per Hour: $8.78

Overtime

Time and one half the regular rate after an 8 hour day.
Time and one half the regular rate for Saturday.
Double time the regular rate for Sunday.

Overtime Holidays

Double time the regular rate for work on the following holiday(s).
New Year's Day
Independence Day
Labor Day
Veteran's Day
Thanksgiving Day
Christmas Day

Double time and one half the regular rate for work on the following holiday(s).
Martin Luther King Jr. Day
President's Day
Memorial Day
Columbus Day

Paid Holidays

New Year's Day
Martin Luther King Jr. Day
President's Day
Memorial Day
Independence Day
Labor Day
Columbus Day
Veteran's Day
Thanksgiving Day
Christmas Day

(Local #638B)

STONE MASON - SETTER

Stone Mason - Setters

Effective Period: 7/1/2015 - 6/30/2016
Wage Rate per Hour: $47.20
Supplemental Benefit Rate per Hour: $37.15

Overtime

Time and one half the regular rate after a 7 hour day.
Time and one half the regular rate for Saturday.
Double time the regular rate for Sunday.

Overtime Holidays

Double time the regular rate for work on the following holiday(s).
New Year's Day
Washington's Birthday
Good Friday
Memorial Day
Independence Day

Labor Day
Thanksgiving Day
Christmas Day

Paid Holidays
1/2 day on Christmas Eve if work is performed in the A.M.

Shift Rates
For all work outside the regular workday (8:00 A.M. to 3:30 P.M. Monday through Friday), the pay shall be straight time plus a ten percent (10%) differential.

(Bricklayers District Council)

TAPER

Drywall Taper

Effective Period: 7/1/2015 - 12/29/2015
Wage Rate per Hour: $46.32
Supplemental Benefit Rate per Hour: $22.66

Effective Period: 12/30/2015 - 6/30/2016
Wage Rate per Hour: $46.82
Supplemental Benefit Rate per Hour: $22.66

Overtime
Time and one half the regular rate after a 7 hour day.
Time and one half the regular rate for Saturday.
Time and one half the regular rate for Sunday.

Overtime Holidays
Time and one half the regular rate for work on the following holiday(s).
New Year's Day
Martin Luther King Jr. Day
President's Day
Good Friday
Memorial Day
Independence Day
Labor Day
Columbus Day
Thanksgiving Day
Christmas Day

Paid Holidays
Any worker who reports to work on Christmas Eve or New Year's Eve pursuant to his employer's instruction shall be entitled to three (3) hours afternoon pay without working.

Shift Rates

Time and one half the regular rate outside the regular work hours (8:00 A.M. through 3:30 P.M.)

(Local #1974)

TELECOMMUNICATION WORKER
(Voice Installation Only)

Telecommunication Worker

Effective Period: 7/1/2015 - 6/30/2016
Wage Rate per Hour: $40.35
Supplemental Benefit Rate per Hour: $13.19
Supplemental Note: The above rate applies for Manhattan, Bronx, Brooklyn, Queens. $12.64 for Staten Island only.

Overtime

Time and one half the regular rate after a 7 hour day.
Time and one half the regular rate for Saturday.
Time and one half the regular rate for Sunday.

Overtime Holidays

Time and one half the regular rate for work on the following holiday(s).
New Year's Day
Lincoln's Birthday
Washington's Birthday
Memorial Day
Independence Day
Labor Day
Columbus Day
Election Day
Veteran's Day
Thanksgiving Day
Christmas Day

Paid Holidays

New Year's Day
Lincoln's Birthday
Washington's Birthday
Memorial Day
Independence Day
Labor Day
Columbus Day
Election Day
Veteran's Day

Thanksgiving Day
Christmas Day
Employees have the option of observing either Martin Luther King's Birthday or the day after Thanksgiving instead of Lincoln's Birthday

Shift Rates

For any workday that starts before 8A.M. or ends after 6P.M. there is a 10% differential for the applicable worker's hourly rate.

Vacation

After 6 months.....one week.
After 12 months but less than 7 years.....two weeks.
After 7 or more but less than 15 years.....three weeks.
After 15 years or more but less than 25 years.....four weeks.

(C.W.A.)

TILE FINISHER

Tile Finisher

Effective Period: 7/1/2015 - 6/30/2016
Wage Rate per Hour: $40.03
Supplemental Benefit Rate per Hour: $29.71

Overtime

Time and one half the regular rate after a 7 hour day.
Time and one half the regular rate for Saturday.
Double time the regular rate for Sunday.

Overtime Holidays

Double time the regular rate for work on the following holiday(s).
New Year's Day
President's Day
Good Friday
Memorial Day
Independence Day
Labor Day
Columbus Day
Veteran's Day
Thanksgiving Day
Day after Thanksgiving
Christmas Day

Paid Holidays

None

Shift Rates

Off shift work day (work performed outside the regular 8:00 A.M. to 3:30 P.M. workday): shift differential of one and one quarter (1¼) times the regular straight time rate of pay for the seven hours of actual off-shift work.

(Local #7)

TILE LAYER - SETTER

Tile Layer - Setter

Effective Period: 7/1/2015 - 6/30/2016
Wage Rate per Hour: $51.61
Supplemental Benefit Rate per Hour: $33.46

Overtime

Time and one half the regular rate after a 7 hour day.
Time and one half the regular rate for Saturday.
Double time the regular rate for Sunday.

Overtime Holidays

Double time the regular rate for work on the following holiday(s).
New Year's Day
President's Day
Good Friday
Memorial Day
Independence Day
Labor Day
Columbus Day
Veteran's Day
Thanksgiving Day
Day after Thanksgiving
Christmas Day

Shift Rates

Off shift work day (work performed outside the regular 8:00 A.M. to 3:30 P.M. workday): shift differential of one and one quarter (1¼) times the regular straight time rate of pay for the seven hours of actual off-shift work.

(Local #7)

TIMBERPERSON

Timberperson

Effective Period: 7/1/2015 - 6/30/2016
Wage Rate per Hour: $45.60
Supplemental Benefit Rate per Hour: $46.67

Overtime
Time and one half the regular rate after an 8 hour day.
Time and one half the regular rate for Saturday.
Double time the regular rate for Sunday.
Saturday may be used as a make-up day at straight time when a day is lost during that week to inclement weather.
Time and one half the regular hourly rate after 40 hours in any work week.

Overtime Holidays
Double time the regular rate for work on the following holiday(s).
New Year's Day
President's Day
Memorial Day
Independence Day
Labor Day
Columbus Day
Presidential Election Day
Thanksgiving Day
Christmas Day

Paid Holidays
None

Shift Rates
Off shift work commencing between 5:00 P.M. and 11:00 P.M. shall work eight and one half hours allowing for one half hour for lunch. The wage rate shall be 113% of the straight time hourly wage rate.

(Local #1536)

TUNNEL WORKER

Blasters, Mucking Machine Operators (Compressed Air Rates)

Effective Period: 7/1/2015 - 6/30/2016
Wage Rate per Hour: $59.17
Supplemental Benefit Rate per Hour: $49.45

Tunnel Workers (Compressed Air Rates)

Effective Period: 7/1/2015 - 6/30/2016

Wage Rate per Hour: $57.12
Supplemental Benefit Rate per Hour: $47.80

Top Nipper (Compressed Air Rates)

Effective Period: 7/1/2015 - 6/30/2016
Wage Rate per Hour: $56.07
Supplemental Benefit Rate per Hour: $46.96

Outside Lock Tender, Outside Gauge Tender,Muck Lock Tender (Compressed Air Rates)

Effective Period: 7/1/2015 - 6/30/2016
Wage Rate per Hour: $55.06
Supplemental Benefit Rate per Hour: $46.07

Bottom Bell & Top Bell Signal Person: Shaft Person (Compressed Air Rates)

Effective Period: 7/1/2015 - 6/30/2016
Wage Rate per Hour: $55.06
Supplemental Benefit Rate per Hour: $46.07

Changehouse Attendant: Powder Watchperson (Compressed Air Rates)

Effective Period: 7/1/2015 - 6/30/2016
Wage Rate per Hour: $48.16
Supplemental Benefit Rate per Hour: $43.62

Blasters (Free Air Rates)

Effective Period: 7/1/2015 - 6/30/2016
Wage Rate per Hour: $56.47
Supplemental Benefit Rate per Hour: $47.47

Tunnel Workers (Free Air Rates)

Effective Period: 7/1/2015 - 6/30/2016
Wage Rate per Hour: $54.04
Supplemental Benefit Rate per Hour: $45.45

All Others (Free Air Rates)

Effective Period: 7/1/2015 - 6/30/2016
Wage Rate per Hour: $49.93
Supplemental Benefit Rate per Hour: $42.06

Microtunneling (Free Air Rates)

Effective Period: 7/1/2015 - 6/30/2016
Wage Rate per Hour: $43.23
Supplemental Benefit Rate per Hour: $36.36

Overtime Description

For Repair-Maintenance Work on Existing Equipment and Facilities - Time and one half the regular rate after a 7 hour day, or for Saturday, or for Sunday. Double time the regular rate for work on a holiday.
For Small-Bore Micro Tunneling Machines - Time and one-half the regular rate shall be paid for all overtime.

Overtime

Double time the regular rate after an 8 hour day.
Double time the regular time rate for Saturday.
Double time the regular rate for Sunday.
Double time the regular rate for work on the following holiday(s).

Paid Holidays

New Year's Day
Lincoln's Birthday
President's Day
Memorial Day
Independence Day
Labor Day
Columbus Day
Election Day
Veteran's Day
Thanksgiving Day
Christmas Day

(Local #147)

WELDER

TO BE PAID AT THE RATE OF THE JOURNEYPERSON IN THE TRADE PERFORMING THE WORK.

OFFICE OF THE COMPTROLLER

CITY OF NEW YORK

220 APPRENTICESHIP PREVAILING WAGE SCHEDULE

APPENDIX

Pursuant to Labor Law §220 (3-e), only apprentices who are individually registered in a bona fide program to which the employer contractor is a participant and registered with the New York State Department of Labor, may be employed on a public work project.

Any employee listed on a payroll at an apprentice wage rate, who is not registered as above, shall be paid the journey person wage rate for the classification of work he actually performed.

Apprentice ratios are established to ensure the proper safety, training and supervision of apprentices. A ratio establishes the number of journey workers required for each apprentice in a program and on a job site. Ratios are interpreted as follows: in the case of a 1:1, 1:4 ratio, there must be one journey worker for the first apprentice, and four additional journey workers for each subsequent apprentice.

TABLE OF CONTENTS

ASBESTOS HANDLER
(Ratio of Apprentice Journeyperson: 1 to 1, 1 to 3)

Asbestos Handler (First 1000 Hours)

Effective Period: 7/1/2015 - 6/30/2016
Wage Rate Per Hour: 78% of Journeyperson's rate
Supplemental Benefit Rate Per Hour: $15.95

Asbestos Handler (Second 1000 Hours)

Effective Period: 7/1/2015 - 6/30/2016
Wage Rate Per Hour: 80% of Journeyperson's rate
Supplemental Benefit Rate Per Hour: $15.95

Asbestos Handler (Third 1000 Hours)

Effective Period: 7/1/2015 - 6/30/2016
Wage Rate Per Hour: 83% of Journeyperson's rate
Supplemental Benefit Rate Per Hour: $15.95

Asbestos Handler (Fourth 1000 Hours)

Effective Period: 7/1/2015 - 6/30/2016
Wage Rate Per Hour: 89% of Journeyperson's rate
Supplemental Benefit Rate Per Hour: $15.95

(Local #78)

BOILERMAKER
(Ratio of Apprentice to Journeyperson: 1 to 1, 1 to 3)

Boilermaker (First Year)

Effective Period: 7/1/2015 - 6/30/2016
Wage Rate Per Hour: 65% of Journeyperson's rate
Supplemental Benefit Rate Per Hour: $30.00

Boilermaker (Second Year: 1st Six Months)

Effective Period: 7/1/2015 - 6/30/2016
Wage Rate Per Hour: 70% of Journeyperson's rate

Supplemental Benefit Rate Per Hour: $31.66

Boilermaker (Second Year: 2nd Six Months)

Effective Period: 7/1/2015 - 6/30/2016
Wage Rate Per Hour: 75% of Journeyperson's rate
Supplemental Benefit Rate Per Hour: $33.32

Boilermaker (Third Year: 1st Six Months)

Effective Period: 7/1/2015 - 6/30/2016
Wage Rate Per Hour: 80% of Journeyperson's rate
Supplemental Benefit Rate Per Hour: $35.00

Boilermaker (Third Year: 2nd Six Months)

Effective Period: 7/1/2015 - 6/30/2016
Wage Rate Per Hour: 85% of Journeyperson's rate
Supplemental Benefit Rate Per Hour: $36.67

Boilermaker (Fourth Year: 1st Six Months)

Effective Period: 7/1/2015 - 6/30/2016
Wage Rate Per Hour: 90% of Journeyperson's rate
Supplemental Benefit Rate Per Hour: $38.34

Boilermaker (Fourth Year: 2nd Six Months)

Effective Period: 7/1/2015 - 6/30/2016
Wage Rate Per Hour: 95% of Journeyperson's rate
Supplemental Benefit Rate Per Hour: $40.01

(Local #5)

BRICKLAYER
(Ratio of Apprentice to Journeyperson: 1 to 1, 1 to 4)

Bricklayer (First 750 Hours)

Effective Period: 7/1/2015 - 6/30/2016
Wage Rate Per Hour: 50% of Journeyperson's rate
Supplemental Benefit Rate Per Hour: $17.10

Bricklayer (Second 750 Hours)

Effective Period: 7/1/2015 - 6/30/2016
Wage Rate Per Hour: 60% of Journeyperson's rate
Supplemental Benefit Rate Per Hour: $17.10

Bricklayer (Third 750 Hours)

Effective Period: 7/1/2015 - 6/30/2016
Wage Rate Per Hour: 70% of Journeyperson's rate
Supplemental Benefit Rate Per Hour: $17.10

Bricklayer (Fourth 750 Hours)

Effective Period: 7/1/2015 - 6/30/2016
Wage Rate Per Hour: 80% of Journeyperson's rate
Supplemental Benefit Rate Per Hour: $17.10

Bricklayer (Fifth 750 Hours)

Effective Period: 7/1/2015 - 6/30/2016
Wage Rate Per Hour: 90% of Journeyperson's rate
Supplemental Benefit Rate Per Hour: $17.10

Bricklayer (Sixth 750 Hours)

Effective Period: 7/1/2015 - 6/30/2016
Wage Rate Per Hour: 95% of Journeyperson's rate
Supplemental Benefit Rate Per Hour: $17.10

(Bricklayer District Council)

CARPENTER
(Ratio of Apprentice to Journeyperson: 1 to 1, 1 to 4)

Carpenter (First Year)

Effective Period: 7/1/2015 - 6/30/2016
Wage Rate Per Hour: 40% of Journeyperson's rate
Supplemental Benefit Rate Per Hour: $31.14

Carpenter (Second Year)

Effective Period: 7/1/2015 - 6/30/2016
Wage Rate Per Hour: 50% of Journeyperson's rate
Supplemental Benefit Rate Per Hour: $31.14

Carpenter (Third Year)

Effective Period: 7/1/2015 - 6/30/2016
Wage Rate Per Hour: 65% of Journeyperson's rate
Supplemental Benefit Rate Per Hour: $31.14

Carpenter (Fourth Year)

Effective Period: 7/1/2015 - 6/30/2016
Wage Rate Per Hour: 80% of Journeyperson's rate
Supplemental Benefit Rate Per Hour: $31.14

(Carpenters District Council)

CEMENT MASON
(Ratio of Apprentice to Journeyperson: 1 to 1, 1 to 4)

Cement Mason (First Year)

Effective Period: 7/1/2015 - 6/30/2016
Wage and Supplemental Rate Per Hour: 50% of Journeyperson's Rate

Cement Mason (Second Year)

Effective Period: 7/1/2015 - 6/30/2016
Wage and Supplemental Rate Per Hour: 60% of Journeyperson's Rate

Cement Mason (Third Year)

Effective Period: 7/1/2015 - 6/30/2016
Wage and Supplemental Rate Per Hour: 70% of Journeyperson's Rate

(Local #780)

CEMENT AND CONCRETE WORKER
(Ratio of Apprentice to Journeyperson: 1 to 1, 1 to 3)

Cement & Concrete Worker (First 1333 hours)

Effective Period: 7/1/2015 - 6/30/2016
Wage Rate Per Hour: 50% of Journeyperson's rate
Supplemental Benefit Rate Per Hour: $18.84

Cement & Concrete Worker (Second 1333 hours)

Effective Period: 7/1/2015 - 6/30/2016
Wage Rate Per Hour: 65% of Journeyperson's rate
Supplemental Benefit Rate Per Hour: $24.65

Cement & Concrete Worker (Last 1334 hours)

Effective Period: 7/1/2015 - 6/30/2016
Wage Rate Per Hour: 80% of Journeyperson's rate
Supplemental Benefit Rate Per Hour: $25.47

(Cement Concrete Workers District Council)

DERRICKPERSON & RIGGER (STONE)
(Ratio of Apprentice to Journeyperson: 1 to 1, 1 to 4)

Derrickperson & Rigger (stone) - First Year

Effective Period: 7/1/2015 - 6/30/2016
Wage Rate Per Hour: 50% of Journeyperson's rate
Supplemental Benefit Rate Per Hour: 50% of Journeyperson's rate

Derrickperson & Rigger (stone) - Second Year: 1st Six Months

Effective Period: 7/1/2015 - 6/30/2016
Wage Rate Per Hour: 70% of Journeyperson's rate
Supplemental Benefit Rate Per Hour: 75% of Journeyperson's rate

Derrickperson & Rigger (stone) - Second Year: 2nd Six Months

Effective Period: 7/1/2015 - 6/30/2016
Wage Rate Per Hour: 80% of Journeyperson's rate
Supplemental Benefit Rate Per Hour: 75% of Journeyperson's rate

Derrickperson & Rigger (stone) - Third Year

Effective Period: 7/1/2015 - 6/30/2016
Wage Rate Per Hour: 90% of Journeyperson's rate
Supplemental Benefit Rate Per Hour: 75% of Journeyperson's rate

(Local #197)

DOCKBUILDER/PILE DRIVER
(Ratio of Apprentice to Journeyperson: 1 to 1, 1 to 6)

Dockbuilder/Pile Driver (First Year)

Effective Period: 7/1/2015 - 6/30/2016
Wage Rate Per Hour: 40% of Journeyperson's rate
Supplemental Benefit Rate Per Hour: $31.52

Dockbuilder/Pile Driver (Second Year)

Effective Period: 7/1/2015 - 6/30/2016
Wage Rate Per Hour: 50% of Journeyperson's rate
Supplemental Benefit Rate Per Hour: $31.52

Dockbuilder/Pile Driver (Third Year)

Effective Period: 7/1/2015 - 6/30/2016
Wage Rate Per Hour: 65% of Journeyperson's rate
Supplemental Benefit Rate Per Hour: $31.52

Dockbuilder/Pile Driver (Fourth Year)

Effective Period: 7/1/2015 - 6/30/2016
Wage Rate Per Hour: 80% of Journeyperson's rate
Supplemental Benefit Rate Per Hour: $31.52

(Carpenters District Council)

ELECTRICIAN
(Ratio of Apprentice to Journeyperson: 1 to 1, 1 to 3)

Electrician (First Term: 0-6 Months)

Effective Period: 7/1/2015 - 6/30/2016
Wage Rate per Hour: $13.00

Supplemental Benefit Rate per Hour: $11.61
Overtime Supplemental Rate Per Hour: $12.47

Electrician (First Term: 7-12 Months)

Effective Period: 7/1/2015 - 6/30/2016
Wage Rate per Hour: $14.00
Supplemental Benefit Rate per Hour: $12.12
Overtime Supplemental Rate Per Hour: $13.04

Electrician (Second Term: 0-6 Months)

Effective Period: 7/1/2015 - 6/30/2016
Wage Rate per Hour: $15.00
Supplemental Benefit Rate per Hour: $12.63
Overtime Supplemental Rate Per Hour: $13.62

Electrician (Second Term: 7-12 Months)

Effective Period: 7/1/2015 - 6/30/2016
Wage Rate per Hour: $16.00
Supplemental Benefit Rate per Hour: $13.14
Overtime Supplemental Rate Per Hour: $14.19

Electrician (Third Term: 0-6 Months)

Effective Period: 7/1/2015 - 6/30/2016
Wage Rate per Hour: $17.00
Supplemental Benefit Rate per Hour: $13.65
Overtime Supplemental Rate Per Hour: $14.77

Electrician (Third Term: 7-12 Months)

Effective Period: 7/1/2015 - 6/30/2016
Wage Rate per Hour: $18.00
Supplemental Benefit Rate per Hour: $14.16
Overtime Supplemental Rate Per Hour: $15.34

Electrician (Fourth Term: 0-6 Months)

Effective Period: 7/1/2015 - 6/30/2016
Wage Rate per Hour: $19.00
Supplemental Benefit Rate per Hour: $14.67
Overtime Supplemental Rate Per Hour: $15.92

Electrician (Fourth Term: 7-12 Months)

Effective Period: 7/1/2015 - 6/30/2016
Wage Rate per Hour: $21.00

Supplemental Benefit Rate per Hour: $15.68
Overtime Supplemental Rate Per Hour: $17.07

Electrician (Fifth Term: 0-12 Months - Hired on or after 5/10/07)

Effective Period: 7/1/2015 - 6/30/2016
Wage Rate per Hour: $23.00
Supplemental Benefit Rate per Hour: $18.56
Overtime Supplemental Rate Per Hour: $20.00

Electrician (Fifth Term: 13-18 Months - Hired on or after 5/10/07)

Effective Period: 7/1/2015 - 6/30/2016
Wage Rate per Hour: $27.50
Supplemental Benefit Rate per Hour: $20.82
Overtime Supplemental Rate Per Hour: $22.54

Electrician (Fifth Term: 0-18 Months - Hired before 5/10/07)

Effective Period: 7/1/2015 - 6/30/2016
Wage Rate per Hour: $26.80
Supplemental Benefit Rate per Hour: $20.46
Overtime Supplemental Rate Per Hour: $22.14

Overtime Description

Overtime Wage paid at time and one half the regular rate
For "A" rated Apprentices (work in excess of 7 hours per day)
For "M" rated Apprentices (work in excess of 8 hours per day)

(Local #3)

ELEVATOR CONSTRUCTOR
(Ratio of Apprentice to Journeyperson: 1 to 1, 1 to 2)

Elevator (Constructor) - First Year

Effective Period: 7/1/2015 - 3/16/2016
Wage Rate Per Hour: 50% of Journeyperson's rate
Supplemental Rate Per Hour: $26.94

Effective Period: 3/17/2016 - 6/30/2016
Wage Rate Per Hour: 50% of Journeyperson's rate
Supplemental Rate Per Hour: $28.41

Elevator (Constructor) - Second Year

Effective Period: 7/1/2015 - 3/16/2016
Wage Rate Per Hour: 55% of Journeyperson's rate
Supplemental Rate Per Hour: $27.35

Effective Period: 3/17/2016 - 6/30/2016
Wage Rate Per Hour: 55% of Journeyperson's rate
Supplemental Rate Per Hour: $28.84

Elevator (Constructor) - Third Year

Effective Period: 7/1/2015 - 3/16/2016
Wage Rate Per Hour: 65% of Journeyperson's rate
Supplemental Rate Per Hour: $28.17

Effective Period: 3/17/2016 - 6/30/2016
Wage Rate Per Hour: 65% of Journeyperson's rate
Supplemental Rate Per Hour: $29.69

Elevator (Constructor) - Fourth Year

Effective Period: 7/1/2015 - 3/16/2016
Wage Rate Per Hour: 75% of Journeyperson's rate
Supplemental Rate Per Hour: $29.00

Effective Period: 3/17/2016 - 6/30/2016
Wage Rate Per Hour: 75% of Journeyperson's rate
Supplemental Rate Per Hour: $30.54

(Local #1)

ELEVATOR REPAIR & MAINTENANCE
(Ratio of Apprentice to Journeyperson: 1 to 1, 1 to 2)

Elevator Service/Modernization Mechanic (First Year)

Effective Period: 7/1/2015 - 3/16/2016
Wage Rate Per Hour: 50% of Journeyperson's rate
Supplemental Benefit Per Hour: $26.87

Effective Period: 3/17/2016 - 6/30/2016
Wage Rate Per Hour: 50% of Journeyperson's rate
Supplemental Benefit Per Hour: $28.34

Elevator Service/Modernization Mechanic (Second Year)

Effective Period: 7/1/2015 - 3/16/2016
Wage Rate Per Hour: 55% of Journeyperson's rate
Supplemental Benefit Per Hour: $27.27

Effective Period: 3/17/2016 - 6/30/2016
Wage Rate Per Hour: 55% of Journeyperson's rate
Supplemental Benefit Per Hour: $28.76

Elevator Service/Modernization Mechanic (Third Year)

Effective Period: 7/1/2015 - 3/16/2016
Wage Rate Per Hour: 65% of Journeyperson's rate
Supplemental Benefit Per Hour: $28.08

Effective Period: 3/17/2016 - 6/30/2016
Wage Rate Per Hour: 65% of Journeyperson's rate
Supplemental Benefit Per Hour: $29.60

Elevator Service/Modernization Mechanic (Fourth Year)

Effective Period: 7/1/2015 - 3/16/2016
Wage Rate Per Hour: 75% of Journeyperson's rate
Supplemental Benefit Per Hour: $28.89

Effective Period: 3/17/2016 - 6/30/2016
Wage Rate Per Hour: 75% of Journeyperson's rate
Supplemental Benefit Per Hour: $30.43

(Local #1)

ENGINEER
(Ratio of Apprentice to Journeyperson: 1 to 1, 1 to 5)

Engineer - First Year

Effective Period: 7/1/2015 - 6/30/2016
Wage Rate per Hour: $23.68
Supplemental Benefit Rate per Hour: $22.55

Engineer - Second Year

Effective Period: 7/1/2015 - 6/30/2016
Wage Rate per Hour: $29.60
Supplemental Benefit Rate per Hour: $22.55

Engineer - Third Year

Effective Period: 7/1/2015 - 6/30/2016
Wage Rate per Hour: $32.56
Supplemental Benefit Rate per Hour: $22.55

Engineer - Fourth Year

Effective Period: 7/1/2015 - 6/30/2016
Wage Rate per Hour: $35.52
Supplemental Benefit Rate per Hour: $22.55

(Local #15)

ENGINEER - OPERATING
(Ratio of Apprentice to Journeyperson: 1 to 1, 1 to 5)

Operating Engineer - First Year

Effective Period: 7/1/2015 - 6/30/2016
Wage Rate Per Hour 40% of Journeyperson's Rate
Supplemental Benefit Per Hour: $20.15

Operating Engineer - Second Year

Effective Period: 7/1/2015 - 6/30/2016
Wage Rate Per Hour: 50% of Journeyperson's Rate
Supplemental Benefit Per Hour: $20.15

Operating Engineer - Third Year

Effective Period: 7/1/2015 - 6/30/2016
Wage Rate Per Hour: 60% of Journeyperson's Rate
Supplemental Benefit Per Hour: $20.15

(Local #14)

FLOOR COVERER
(Ratio of Apprentice to Journeyperson: 1 to 1, 1 to 4)

Floor Coverer (First Year)

Effective Period: 7/1/2015 - 6/30/2016
Wage Rate Per Hour: 40% of Journeyperson's rate
Supplemental Rate Per Hour: $31.14

Floor Coverer (Second Year)

Effective Period: 7/1/2015 - 6/30/2016
Wage Rate Per Hour: 50% of Journeyperson's rate
Supplemental Rate Per Hour: $31.14

Floor Coverer (Third Year)

Effective Period: 7/1/2015 - 6/30/2016
Wage Rate Per Hour: 65% of Journeyperson's rate
Supplemental Rate Per Hour: $31.14

Floor Coverer (Fourth Year)

Effective Period: 7/1/2015 - 6/30/2016
Wage Rate Per Hour: 80% of Journeyperson's rate
Supplemental Rate Per Hour: $31.14

(Carpenters District Council)

GLAZIER
(Ratio of Apprentice to Journeyperson: 1 to 1, 1 to 3)

Glazier (First Year)

Effective Period: 7/1/2015 - 6/30/2016
Wage Rate Per Hour: 40% of Journeyperson's rate
Supplemental Rate Per Hour: $13.64
Effective 11/1/2015 - Supplemental Rate Per Hour: $13.79

Glazier (Second Year)

Effective Period: 7/1/2015 - 6/30/2016
Wage Rate Per Hour: 50% of Journeyperson's rate

Supplemental Rate Per Hour: $22.97
Effective 11/1/2015 - Supplemental Rate Per Hour: $23.13

Glazier (Third Year)

Effective Period: 7/1/2015 - 6/30/2016
Wage Rate Per Hour: 60% of Journeyperson's rate
Supplemental Rate Per Hour: $25.87
Effective 11/1/2015 - Supplemental Rate Per Hour: $26.03

Glazier (Fourth Year)

Effective Period: 7/1/2015 - 6/30/2016
Wage Rate Per Hour: 80% of Journeyperson's rate
Supplemental Rate Per Hour: $31.04
Effective 11/1/2015 - Supplemental Rate Per Hour: $31.29

(Local #1281)

HEAT & FROST INSULATOR
(Ratio of Apprentice to Journeyperson: 1 to 1, 1 to 4)

Heat & Frost Insulator (First Year)

Effective Period: 7/1/2015 - 6/30/2016
Wage and Supplemental Rate Per Hour: 40% of Journeyperson's rate

Heat & Frost Insulator (Second Year)

Effective Period: 7/1/2015 - 6/30/2016
Wage and Supplemental Rate Per Hour: 60% of Journeyperson's rate

Heat & Frost Insulator (Third Year)

Effective Period: 7/1/2015 - 6/30/2016
Wage and Supplemental Rate Per Hour: 70% of Journeyperson's rate

Heat & Frost Insulator (Fourth Year)

Effective Period: 7/1/2015 - 6/30/2016
Wage and Supplemental Rate Per Hour: 80% of Journeyperson's rate

(Local #12)

HOUSE WRECKER
(TOTAL DEMOLITION)
(Ratio of Apprentice to Journeyperson: 1 to 1, 1 to 3)

House Wrecker - First Year

Effective Period: 7/1/2015 - 6/30/2016
Wage Rate per Hour: $21.17
Supplemental Benefit Rate per Hour: $17.33

House Wrecker - Second Year

Effective Period: 7/1/2015 - 6/30/2016
Wage Rate per Hour: $22.32
Supplemental Benefit Rate per Hour: $17.33

House Wrecker - Third Year

Effective Period: 7/1/2015 - 6/30/2016
Wage Rate per Hour: $23.97
Supplemental Benefit Rate per Hour: $17.33

House Wrecker - Fourth Year

Effective Period: 7/1/2015 - 6/30/2016
Wage Rate per Hour: $26.53
Supplemental Benefit Rate per Hour: $17.33

(Mason Tenders District Council)

IRON WORKER - ORNAMENTAL
(Ratio of Apprentice to Journeyperson: 1 to 1, 1 to 4)

Iron Worker (Ornamental) - 1st Ten Months

Effective Period: 7/1/2015 - 6/30/2016
Wage Rate Per Hour: 50% of Journeyperson's rate
Supplemental Rate Per Hour: $36.50

Iron Worker (Ornamental) - 11 -16 Months

Effective Period: 7/1/2015 - 6/30/2016
Wage Rate Per Hour: 55% of Journeyperson's rate
Supplemental Rate Per Hour: $37.62

Iron Worker (Ornamental) - 17 - 22 Months

Effective Period: 7/1/2015 - 6/30/2016
Wage Rate Per Hour: 60% of Journeyperson's rate
Supplemental Rate Per Hour: $38.73

Iron Worker (Ornamental) - 23 - 28 Months

Effective Period: 7/1/2015 - 6/30/2016
Wage Rate Per Hour: 70% of Journeyperson's rate
Supplemental Rate Per Hour: $40.97

Iron Worker (Ornamental) - 29 - 36 Months

Effective Period: 7/1/2015 - 6/30/2016
Wage Rate Per Hour: 80% of Journeyperson's rate
Supplemental Rate Per Hour: $43.20

(Local #580)

IRON WORKER - STRUCTURAL
(Ratio of Apprentice to Journeyperson: 1 to 1, 1 to 6)

Iron Worker (Structural) - 1st Six Months

Effective Period: 7/1/2015 - 6/30/2016
Wage Rate per Hour: $25.48
Supplemental Benefit Rate per Hour: $46.83

Iron Worker (Structural) - 7- 18 Months

Effective Period: 7/1/2015 - 6/30/2016
Wage Rate per Hour: $26.08
Supplemental Benefit Rate per Hour: $46.83

Iron Worker (Structural) - 19 - 36 months

Effective Period: 7/1/2015 - 6/30/2016
Wage Rate per Hour: $26.68
Supplemental Benefit Rate per Hour: $46.83

(Local #40 and #361)

LABORER (FOUNDATION, CONCRETE, EXCAVATING, STREET PIPE LAYER & COMMON)
(Ratio Apprentice to Journeyperson: 1 to 1, 1 to 3)

Laborer (Foundation, Concrete, Excavating, Street Pipe Layer & Common) - First 1000 hours

Effective Period: 7/1/2015 - 6/30/2016
Wage Rate Per Hour: 50% of Journeyperson's rate
Supplemental Rate Per Hour: $36.53

Laborer (Foundation, Concrete, Excavating, Street Pipe Layer & Common) - Second 1000 hours

Effective Period: 7/1/2015 - 6/30/2016
Wage Rate Per Hour: 60% of Journeyperson's rate
Supplemental Rate Per Hour: $36.53

Laborer (Foundation, Concrete, Excavating, Street Pipe Layer & Common) - Third 1000 hours

Effective Period: 7/1/2015 - 6/30/2016
Wage Rate Per Hour: 75% of Journeyperson's rate
Supplemental Rate Per Hour: $36.53

Laborer (Foundation, Concrete, Excavating, Street Pipe Layer & Common) - Fourth 1000 hours

Effective Period: 7/1/2015 - 6/30/2016
Wage Rate Per Hour: 90% of Journeyperson's rate
Supplemental Rate Per Hour: $36.53

(Local #731)

MARBLE MECHANICS
(Ratio of Apprentice to Journeyperson: 1 to 1, 1 to 4)

Cutters & Setters - First 750 Hours

Effective Period: 7/1/2015 - 6/30/2016
Wage and Supplemental Rate Per Hour: 50% of Journeyperson's rate

NO BENEFITS PAID DURING THE FIRST TWO MONTHS (PROBATIONARY PERIOD)

Cutters & Setters - Second 750 Hours

Effective Period: 7/1/2015 - 6/30/2016
Wage and Supplemental Rate Per Hour: 55% of Journeyperson's rate

Cutters & Setters - Third 750 Hours

Effective Period: 7/1/2015 - 6/30/2016
Wage and Supplemental Rate Per Hour: 65% of Journeyperson's rate

Cutters & Setters - Fourth 750 Hours

Effective Period: 7/1/2015 - 6/30/2016
Wage and Supplemental Rate Per Hour: 75% of Journeyperson's rate

Cutters & Setters - Fifth 750 Hours

Effective Period: 7/1/2015 - 6/30/2016
Wage and Supplemental Rate Per Hour: 85% of Journeyperson's rate

Cutters & Setters - Sixth 750 Hours

Effective Period: 7/1/2015 - 6/30/2016
Wage and Supplemental Rate Per Hour: 95% of Journeyperson's rate

Polishers & Finishers - First 750 Hours

Effective Period: 7/1/2015 - 6/30/2016
Wage and Supplemental Rate Per Hour: 50% of Journeyperson's rate

NO BENEFITS PAID DURING THE FIRST TWO MONTHS (PROBATIONARY PERIOD)

Polishers & Finishers - Second 750 Hours

Effective Period: 7/1/2015 - 6/30/2016
Wage and Supplemental Rate Per Hour: 60% of Journeyperson's rate

Polishers & Finishers - Third 750 Hours

Effective Period: 7/1/2015 - 6/30/2016
Wage and Supplemental Rate Per Hour: 75% of Journeyperson's rate

Polishers & Finishers - Fourth 750 Hours

Effective Period: 7/1/2015 - 6/30/2016
Wage and Supplemental Rate Per Hour: 90% of Journeyperson's rate

(Local #7)

MASON TENDER
(Ratio of Apprentice to Journeyperson: 1 to 1, 1 to 3)

Mason Tender - First Year

Effective Period: 7/1/2015 - 6/30/2016
Wage Rate per Hour: $21.39
Supplemental Benefit Rate per Hour: $18.44

Mason Tender - Second Year

Effective Period: 7/1/2015 - 6/30/2016
Wage Rate per Hour: $22.54
Supplemental Benefit Rate per Hour: $18.44

Mason Tender - Third Year

Effective Period: 7/1/2015 - 6/30/2016
Wage Rate per Hour: $24.29
Supplemental Benefit Rate per Hour: $18.49

Mason Tender - Fourth Year

Effective Period: 7/1/2015 - 6/30/2016
Wage Rate per Hour: $26.95
Supplemental Benefit Rate per Hour: $18.49

(Local #79)

METALLIC LATHER
(Ratio of Apprentice to Journeyperson: 1 to 1, 1 to 3)

Metallic Lather (First Year -Called Prior to 6/29/11)

Effective Period: 7/1/2015 - 6/30/2016
Wage Rate per Hour: $29.41
Supplemental Benefit Rate per Hour: $22.89

Metallic Lather (Second Year - Called Prior to 6/29/11)

Effective Period: 7/1/2015 - 6/30/2016
Wage Rate per Hour: $34.01
Supplemental Benefit Rate per Hour: $24.54

Metallic Lather (Third Year - Called Prior to 6/29/11)

Effective Period: 7/1/2015 - 6/30/2016
Wage Rate per Hour: $39.07
Supplemental Benefit Rate per Hour: $25.69

Metallic Lather (First Year -Called On Or After 6/29/11)

Effective Period: 7/1/2015 - 6/30/2016
Wage Rate per Hour: $23.01
Supplemental Benefit Rate per Hour: $17.95

Metallic Lather (Second Year - Called On Or After 6/29/11)

Effective Period: 7/1/2015 - 6/30/2016
Wage Rate per Hour: $28.11
Supplemental Benefit Rate per Hour: $17.95

Metallic Lather (Third Year - Called On Or After 6/29/11)

Effective Period: 7/1/2015 - 6/30/2016
Wage Rate per Hour: $33.21
Supplemental Benefit Rate per Hour: $17.95

(Local #46)

MILLWRIGHT
(Ratio of Apprentice to Journeyperson: 1 to 1, 1 to 4)

Millwright (First Year)

Effective Period: 7/1/2015 - 6/30/2016
Wage Rate per Hour: $27.23
Supplemental Benefit Rate per Hour: $34.06

Millwright (Second Year)

Effective Period: 7/1/2015 - 6/30/2016
Wage Rate per Hour: $32.18
Supplemental Benefit Rate per Hour: $37.62

Millwright (Third Year)

Effective Period: 7/1/2015 - 6/30/2016
Wage Rate per Hour: $37.13
Supplemental Benefit Rate per Hour: $41.83

Millwright (Fourth Year)

Effective Period: 7/1/2015 - 6/30/2016
Wage Rate per Hour: $47.03
Supplemental Benefit Rate per Hour: $48.31

(Local #740)

PAVER AND ROADBUILDER
(Ratio of Apprentice to Journeyperson: 1 to 1, 1 to 3)

Paver and Roadbuilder - First Year (Minimum 1000 hours)

Effective Period: 7/1/2015 - 6/30/2016
Wage Rate per Hour: $27.05
Supplemental Benefit Rate per Hour: $17.12

Paver and Roadbuilder - Second Year (Minimum 1000 hours)

Effective Period: 7/1/2015 - 6/30/2016
Wage Rate per Hour: $28.69
Supplemental Benefit Rate per Hour: $17.12

(Local #1010)

PAINTER
(Ratio of Apprentice to Journeyperson: 1 to 1, 1 to 3)

Painter - Brush & Roller - First Year

Effective Period: 7/1/2015 - 10/31/2015
Wage Rate per Hour: $15.80
Supplemental Benefit Rate per Hour: $11.88

Effective Period: 11/1/2015 - 6/30/2016
Wage Rate per Hour: $16.40
Supplemental Benefit Rate per Hour: $12.13

Painter - Brush & Roller - Second Year

Effective Period: 7/1/2015 - 10/31/2015
Wage Rate per Hour: $19.75
Supplemental Benefit Rate per Hour: $15.73

Effective Period: 11/1/2015 - 6/30/2016
Wage Rate per Hour: $20.50
Supplemental Benefit Rate per Hour: $15.98

Painter - Brush & Roller - Third Year

Effective Period: 7/1/2015 - 10/31/2015
Wage Rate per Hour: $23.70
Supplemental Benefit Rate per Hour: $18.64

Effective Period: 11/1/2015 - 6/30/2016
Wage Rate per Hour: $24.60
Supplemental Benefit Rate per Hour: $18.89

Painter - Brush & Roller - Fourth Year

Effective Period: 7/1/2015 - 10/31/2015
Wage Rate per Hour: $31.60

Supplemental Benefit Rate per Hour: $24.02

Effective Period: 11/1/2015 - 6/30/2016
Wage Rate per Hour: $32.80
Supplemental Benefit Rate per Hour: $24.27

(District Council of Painters)

PAINTER - STRUCTURAL STEEL
(Ratio of Apprentice to Journeyperson: 1 to 1, 1 to 3)

Painters - Structural Steel (First Year)

Effective Period: 7/1/2015 - 6/30/2016
Wage and Supplemental Rate Per Hour: 40% of Journeyperson's rate

Painters - Structural Steel (Second Year)

Effective Period: 7/1/2015 - 6/30/2016
Wage and Supplemental Rate Per Hour: 60% of Journeyperson's rate

Painters - Structural Steel (Third Year)

Effective Period: 7/1/2015 - 6/30/2016
Wage and Supplemental Rate Per Hour: 80% of Journeyperson's rate

(Local #806)

PLASTERER
(Ratio of Apprentice to Journeyperson: 1 to 1, 1 to 3)

Plasterer - First Year: 1st Six Months

Effective Period: 7/1/2015 - 6/30/2016
Wage Rate Per Hour: 40% of Journeyperson's rate
Supplemental Rate Per Hour: $15.76

Plasterer - First Year: 2nd Six Months

Effective Period: 7/1/2015 - 6/30/2016
Wage Rate Per Hour: 45% of Journeyperson's rate
Supplemental Rate Per Hour: $16.24

Plasterer - Second Year: 1st Six Months

Effective Period: 7/1/2015 - 6/30/2016
Wage Rate Per Hour: 55% of Journeyperson's rate
Supplemental Rate Per Hour: $18.21

Plasterer - Second Year: 2nd Six Months

Effective Period: 7/1/2015 - 6/30/2016
Wage Rate Per Hour: 60% of Journeyperson's rate
Supplemental Rate Per Hour: $19.29

Plasterer - Third Year: 1st Six Months

Effective Period: 7/1/2015 - 6/30/2016
Wage Rate Per Hour: 70% of Journeyperson's rate
Supplemental Rate Per Hour: $21.46

Plasterer - Third Year: 2nd Six Months

Effective Period: 7/1/2015 - 6/30/2016
Wage Rate Per Hour: 75% of Journeyperson's rate
Supplemental Rate Per Hour: $22.54

(Local #530)

PLUMBER
(Ratio of Apprentice to Journeyperson: 1 to 1, 1 to 3)

Plumber - First Year: 1st Six Months

Effective Period: 7/1/2015 - 6/30/2016
Wage Rate per Hour: $14.00
Supplemental Benefit Rate per Hour: $0.71

Plumber - First Year: 2nd Six Months

Effective Period: 7/1/2015 - 6/30/2016
Wage Rate per Hour: $14.00

Supplemental Benefit Rate per Hour: $2.96

Plumber - Second Year

Effective Period: 7/1/2015 - 6/30/2016
Wage Rate per Hour: $23.87
Supplemental Benefit Rate per Hour: $12.76

Plumber - Third Year

Effective Period: 7/1/2015 - 6/30/2016
Wage Rate per Hour: $25.97
Supplemental Benefit Rate per Hour: $12.76

Plumber - Fourth Year

Effective Period: 7/1/2015 - 6/30/2016
Wage Rate per Hour: $28.82
Supplemental Benefit Rate per Hour: $12.76

Plumber - Fifth Year: 1st Six Months

Effective Period: 7/1/2015 - 6/30/2016
Wage Rate per Hour: $30.22
Supplemental Benefit Rate per Hour: $12.76

Plumber - Fifth Year: 2nd Six Months

Effective Period: 7/1/2015 - 6/30/2016
Wage Rate per Hour: $42.29
Supplemental Benefit Rate per Hour: $12.76

(Plumbers Local #1)

POINTER - WATERPROOFER, CAULKER MECHANIC (EXTERIOR BUILDING RENOVATION)

(Ratio of Apprentice to Journeyperson: 1 to 1, 1 to 4)

Pointer - Waterproofer, Caulker Mechanic - First Year

Effective Period: 7/1/2015 - 6/30/2016
Wage Rate per Hour: $25.01

Supplemental Benefit Rate per Hour: $4.75

Pointer - Waterproofer, Caulker Mechanic - Second Year

Effective Period: 7/1/2015 - 6/30/2016
Wage Rate per Hour: $27.25
Supplemental Benefit Rate per Hour: $9.70

Pointer - Waterproofer, Caulker Mechanic - Third Year

Effective Period: 7/1/2015 - 6/30/2016
Wage Rate per Hour: $32.24
Supplemental Benefit Rate per Hour: $12.45

Pointer - Waterproofer, Caulker Mechanic - Fourth Year

Effective Period: 7/1/2015 - 6/30/2016
Wage Rate per Hour: $38.66
Supplemental Benefit Rate per Hour: $12.45

(Bricklayer District Council)

ROOFER
(Ratio of Apprentice to Journeyperson: 1 to 1, 1 to 2)

Roofer - First Year

Effective Period: 7/1/2015 - 6/30/2016
Wage and Supplemental Rate Per Hour: 35% of Journeyperson's Rate

Roofer - Second Year

Effective Period: 7/1/2015 - 6/30/2016
Wage and Supplemental Rate Per Hour: 50% of Journeyperson's Rate

Roofer - Third Year

Effective Period: 7/1/2015 - 6/30/2016
Wage and Supplemental Rate Per Hour: 60% of Journeyperson's Rate

Roofer - Fourth Year

Effective Period: 7/1/2015 - 6/30/2016

Wage and Supplemental Rate Per Hour: 75% of Journeyperson's Rate

(Local #8)

SHEET METAL WORKER
(Ratio of Apprentice to Journeyperson: 1 to 1, 1 to 3)

Sheet Metal Worker (0-6 Months)

Effective Period: 7/1/2015 - 6/30/2016
Wage Rate Per Hour: 25% of Journeyperson's rate
Supplemental Rate Per Hour: $6.24

Sheet Metal Worker (7-18 Months)

Effective Period: 7/1/2015 - 6/30/2016
Wage Rate Per Hour: 35% of Journeyperson's rate
Supplemental Rate Per Hour: $16.71

Sheet Metal Worker (19-30 Months)

Effective Period: 7/1/2015 - 6/30/2016
Wage Rate Per Hour: 45% of Journeyperson's rate
Supplemental Rate Per Hour: $23.00

Sheet Metal Worker (31-36 Months)

Effective Period: 7/1/2015 - 6/30/2016
Wage Rate Per Hour: 55% of Journeyperson's rate
Supplemental Rate Per Hour: $27.02

Sheet Metal Worker (37-42 Months)

Effective Period: 7/1/2015 - 6/30/2016
Wage Rate Per Hour: 60% of Journeyperson's rate
Supplemental Rate Per Hour: $29.06

Sheet Metal Worker (43-48 Months)

Effective Period: 7/1/2015 - 6/30/2016
Wage Rate Per Hour: 70% of Journeyperson's rate
Supplemental Rate Per Hour: $33.10

Sheet Metal Worker (49-54 Months)

Effective Period: 7/1/2015 - 6/30/2016
Wage Rate Per Hour: 75% of Journeyperson's rate
Supplemental Rate Per Hour: $35.12

Sheet Metal Worker (55-60 Months)

Effective Period: 7/1/2015 - 6/30/2016
Wage Rate Per Hour: 80% of Journeyperson's rate
Supplemental Rate Per Hour: $37.15

(Local #28)

SIGN ERECTOR
(Ratio of Apprentice to Journeyperson: 1 to 1, 1 to 4)

Sign Erector - First Year: 1st Six Months

Effective Period: 7/1/2015 - 6/30/2016
Wage Rate Per Hour: 35% of Journeyperson's rate
Supplemental Rate Per Hour: $13.18

Sign Erector - First Year: 2nd Six Months

Effective Period: 7/1/2015 - 6/30/2016
Wage Rate Per Hour: 40% of Journeyperson's rate
Supplemental Rate Per Hour: $14.95

Sign Erector - Second Year: 1st Six Months

Effective Period: 7/1/2015 - 6/30/2016
Wage Rate Per Hour: 45% of Journeyperson's rate
Supplemental Rate Per Hour: $16.74

Sign Erector - Second Year: 2nd Six Months

Effective Period: 7/1/2015 - 6/30/2016
Wage Rate Per Hour: 50% of Journeyperson's rate
Supplemental Rate Per Hour: $18.52

Sign Erector - Third Year: 1st Six Months

Effective Period: 7/1/2015 - 6/30/2016
Wage Rate Per Hour: 55% of Journeyperson's rate
Supplemental Rate Per Hour: $24.94

Sign Erector - Third Year: 2nd Six Months

Effective Period: 7/1/2015 - 6/30/2016
Wage Rate Per Hour: 60% of Journeyperson's rate
Supplemental Rate Per Hour: $26.87

Sign Erector - Fourth Year: 1st Six Months

Effective Period: 7/1/2015 - 6/30/2016
Wage Rate Per Hour: 65% of Journeyperson's rate
Supplemental Rate Per Hour: $29.47

Sign Erector - Fourth Year: 2nd Six Months

Effective Period: 7/1/2015 - 6/30/2016
Wage Rate Per Hour: 70% of Journeyperson's rate
Supplemental Rate Per Hour: $31.46

Sign Erector - Fifth Year

Effective Period: 7/1/2015 - 6/30/2016
Wage Rate Per Hour: 75% of Journeyperson's rate
Supplemental Rate Per Hour: $33.43

Sign Erector - Sixth Year

Effective Period: 7/1/2015 - 6/30/2016
Wage Rate Per Hour: 80% of Journeyperson's rate
Supplemental Rate Per Hour: $35.41

(Local #137)

STEAMFITTER
(Ratio of Apprentice to Journeyperson: 1 to 1, 1 to 3)

Steamfitter - First Year

Effective Period: 7/1/2015 - 6/30/2016
Wage Rate and Supplemental Per Hour: 40% of Journeyperson's rate

Steamfitter - Second Year

Effective Period: 7/1/2015 - 6/30/2016
Wage Rate and Supplemental Rate Per Hour: 50% of Journeyperson's rate.

Steamfitter - Third Year

Effective Period: 7/1/2015 - 6/30/2016
Wage Rate and Supplemental Rate per Hour: 65% of Journeyperson's rate.

Steamfitter - Fourth Year

Effective Period: 7/1/2015 - 6/30/2016
Wage Rate and Supplemental Rate Per Hour: 80% of Journeyperson's rate.

Steamfitter - Fifth Year

Effective Period: 7/1/2015 - 6/30/2016
Wage Rate and Supplemental Rate Per Hour: 85% of Journeyperson's rate.

(Local #638)

STONE MASON - SETTER
(Ratio Apprentice of Journeyperson: 1 to 1, 1 to 2)

Stone Mason - Setters - First 750 Hours

Effective Period: 7/1/2015 - 6/30/2016
Wage and Supplemental Rate Per Hour: 50% of Journeyperson's rate

Stone Mason - Setters - Second 750 Hours

Effective Period: 7/1/2015 - 6/30/2016
Wage Rate Per Hour: 60% of Journeyperson's rate
Supplemental Rate Per Hour: 50% of Journeyperson's rate

Stone Mason - Setters - Third 750 Hours

Effective Period: 7/1/2015 - 6/30/2016
Wage Rate Per Hour: 70% of Journeyperson's rate
Supplemental Rate Per Hour: 50% of Journeyperson's rate

Stone Mason - Setters - Fourth 750 Hours

Effective Period: 7/1/2015 - 6/30/2016
Wage Rate Per Hour: 80% of Journeyperson's rate
Supplemental Rate Per Hour: 50% of Journeyperson's rate

Stone Mason - Setters - Fifth 750 Hours

Effective Period: 7/1/2015 - 6/30/2016
Wage Rate Per Hour: 90% of Journeyperson's rate
Supplemental Rate Per Hour: 50% of Journeyperson's rate

Stone Mason - Setters - Sixth 750 Hours

Effective Period: 7/1/2015 - 6/30/2016
Wage Rate Per Hour: 100% of Journeyperson's rate
Supplemental Rate Per Hour: 50% of Journeyperson's rate

(Bricklayers District Council)

TAPER
(Ratio of Apprentice to Journeyperson: 1 to 1, 1 to 4)

Drywall Taper - First Year

Effective Period: 7/1/2015 - 6/30/2016
Wage and Supplemental Rate Per Hour: 40% of Journeyperson's rate

Drywall Taper - Second Year

Effective Period: 7/1/2015 - 6/30/2016
Wage and Supplemental Rate Per Hour: 60% of Journeyperson's rate

Drywall Taper - Third Year

Effective Period: 7/1/2015 - 6/30/2016
Wage and Supplemental Rate Per Hour: 80% of Journeyperson's rate

(Local #1974)

TILE LAYER - SETTER
(Ratio of Apprentice to Journeyperson: 1 to 1, 1 to 4)

Tile Layer - Setter - First 750 Hours

Effective Period: 7/1/2015 - 6/30/2016

Wage and Supplemental Rate Per Hour: 50% of Journeyperson's rate

Tile Layer - Setter - Second 750 Hours

Effective Period: 7/1/2015 - 6/30/2016
Wage and Supplemental Rate Per Hour: 55% of Journeyperson's rate

Tile Layer - Setter - Third 750 Hours

Effective Period: 7/1/2015 - 6/30/2016
Wage and Supplemental Rate Per Hour: 65% of Journeyperson's rate

Tile Layer - Setter - Fourth 750 Hours

Effective Period: 7/1/2015 - 6/30/2016
Wage and Supplemental Rate Per Hour: 75% of Journeyperson's rate

Tile Layer - Setter - Fifth 750 Hours

Effective Period: 7/1/2015 - 6/30/2016
Wage and Supplemental Rate Per Hour: 85% of Journeyperson's rate

Tile Layer - Setter - Sixth 750 Hours

Effective Period: 7/1/2015 - 6/30/2016
Wage and Supplemental Rate Per Hour: 95% of Journeyperson's rate

(Local #7)

TIMBERPERSON
(Ratio of Apprentice to Journeyperson: 1 to 1, 1 to 6)

Timberperson - First Year

Effective Period: 7/1/2015 - 6/30/2016
Wage Rate Per Hour: 40% of Journeyperson's rate
Supplemental Rate Per Hour: $31.54

Timberperson - Second Year

Effective Period: 7/1/2015 - 6/30/2016
Wage Rate Per Hour: 50% of Journeyperson's rate
Supplemental Rate Per Hour: $31.54

Timberperson - Third Year

Effective Period: 7/1/2015 - 6/30/2016
Wage Rate Per Hour: 65% of Journeyperson's rate
Supplemental Rate Per Hour: $31.54

Timberperson - Fourth Year

Effective Period: 7/1/2015 - 6/30/2016
Wage Rate Per Hour: 80% of Journeyperson's rate
Supplemental Rate Per Hour: $31.54

(Local #1536)

NYC ADMINISTRATIVE CODE § 6-109 SCHEDULE OF "LIVING WAGES"

Contractors who provide the following services to the City of New York must post a copy of this Living Wage Schedule at their work site(s) as required by New York City Administrative Code § 6-109:

- **Building Services,**
- **Day Care Services,**
- **Food Services,**
- **Head Start Services,**
- **Homecare Services,**
- **Services to Persons with Cerebral Palsy, and**
- **Temporary Services.**

In accordance with NYC Administrative Code § 6-109, the Comptroller of the City of New York promulgated this schedule of living wages for the above services on contracts for non-emergency work in excess of the small purchase limit set by the Procurement Policy Board; contracting agencies must annex this schedule to such contracts.

This schedule is a compilation of separate determinations of the prevailing rate of wage and supplements made by the Comptroller for each trade classification listed herein pursuant to New York City Administrative Code section 6-109. The source of the wage and supplement rates, whether a collective bargaining agreement, survey data or other, is listed at the end of each classification.

A city service contractor or subcontractor that provides homecare services, day care services, head start services or services to persons with cerebral palsy must pay its covered employees that directly render such services in performance of the city service contract or subcontract no less than the living wage and must provide its employees health benefits (supplemental benefits) or must supplement their hourly wage rate by an amount no less than the health benefits supplement rate. This requirement applies for each hour that the employee works performing the city service contract or subcontract.

A city service contractor or subcontractor that provides building services, food services or temporary services must pay its employees that are engaged in performing the city service contract or subcontract no less than the living wage or the prevailing wage, whichever is greater. Where the living wage is greater than the prevailing wage, the city service contractor or subcontractor must either provide its employees health benefits or must supplement their hourly wage rate by an amount no less than the health benefits supplement rate. Where the prevailing wage is greater than the living wage, the city service contractor or subcontractor must provide its employees the prevailing wage and supplements. These requirements apply for each hour that the employee works performing the city service contract or subcontract.

The appropriate schedule of living wages must be posted at all work sites pursuant to NYC Administrative Code 6-109.

The schedule is applicable for work performed during the effective period, unless otherwise noted. You will be notified of any changes to this schedule by addenda published on our web site www.comptroller.nyc.gov. Schedules for future one-year periods will be published annually in the City Record on or about July 1st of each succeeding year and on our web site www.comptroller.nyc.gov.

The living wage rate and the health benefit supplement rate are known through June 30 of each year and those rates are listed in this schedule.

The living wage rates listed in this schedule may not include all hourly wage calculations for overtime, shift differential, Holiday, Saturday, Sunday or other premium time work. Similarly, this schedule does not set forth every living wage practice with which employers must comply.

Some of the rates in this schedule are based on collective bargaining agreements. These agreements are available for inspection by appointment. Requests for appointments may be made by calling (212) 669-4443, Monday through Friday between the hours of 9 a.m. and 5 p.m.

Answers to questions concerning prevailing wage practices may be obtained from the Classification Unit by calling (212) 669-7974. Please direct all other compliance issues to; Bureau of Labor Law, Attn: Wasyl Kinach, P.E., Office of the Comptroller, 1 Centre Street, Room 1122, New York, N.Y. 10007; Fax (212) 669-4002.

Contractors are solely responsible for maintaining original payroll records, which delineate, among other things, the hours each employee worked within a given classification. Contractors using rates and/or classifications not promulgated by the Comptroller do so at their own risk. Additionally, prior to bid, an agency's chief contracting officer must contact the Bureau of Labor Law to obtain a wage determination for a work classification not published in this schedule.

The information listed below is intended to assist you in meeting your living wage and prevailing wage obligation. Contractors are advised to review the Comptroller's Living Wage Schedule prior to submitting a bid for City work. Any wage rate error made by the contracting agency in the contract documents will not preclude a finding against the contractor for an underpayment of the applicable living wage or the applicable prevailing wage.

This schedule sets forth the living wage and benefit rates required to be annexed to and form part of the contract specifications for work covered by New York City Administrative Code § 6-109. Contractors performing such work are required to pay not less that the rates specified in this schedule for the applicable trade or occupation.

Benefits are paid for *EACH HOUR WORKED* unless otherwise noted.

Wasyl Kinach, P.E.
Director of Classifications
Bureau of Labor Law

TABLE OF CONTENTS

BUILDING CLEANER AND MAINTAINER (OFFICE)

For the above building service classification, see the Labor Law Section 230 Schedule.

BUILDING CLEANER AND MAINTAINER (RESIDENTIAL)

For the above building service classification, see the Labor Law Section 230 Schedule.

CLEANER (PARKING GARAGE)

For the above building service classification, see the Labor Law Section 230 Schedule.

DAY CARE SERVICES

Day Care Services

'Day Care Services' means provision of day care services through the city's center-based day care program administered under contract with the city's Administration for Children's Services. No other day care programs shall be covered, including family-based day care programs administered by city-contracted day care centers.

Effective Period: 7/1/2015 - 6/30/2016
Wage Rate per Hour: $10.00
Supplemental Benefit Rate per Hour: $1.50

(NYC Administrative Code §6-109)

FOOD SERVICE EMPLOYEES

Cook

Effective Period: 7/1/2015 - 6/30/2016
Wage Rate per Hour: $16.63
Supplemental Benefit Rate per Hour: $1.70

Cafeteria Attendant

Effective Period: 7/1/2015 - 6/30/2016
Wage Rate per Hour: $11.67
Supplemental Benefit Rate per Hour: $1.70

Counter Attendant

Effective Period: 7/1/2015 - 6/30/2016
Wage Rate per Hour: $11.22
Supplemental Benefit Rate per Hour: $1.70

Kitchen Helper / Dishwasher

Effective Period: 7/1/2015 - 6/30/2016
Wage Rate per Hour: $11.04
Supplemental Benefit Rate per Hour: $1.70

Overtime

Time and one half the regular hourly rate after 40 hours in any work week.

(Based on data from NYS Department of Labor Occupational Employment Statistics and US Department of Labor Bureau of Labor Statistics)

GARDENER

For the above building service classification, see the Labor Law Section 230 Schedule.

HEAD START SERVICES

Head Start Services

'Head Start Services' means provision of head start services through the city's center-based head start program administered under contract with the city's Administration for Children's Services. No other head start programs shall be covered.

Effective Period: 7/1/2015 - 6/30/2016
Wage Rate per Hour: $10.00
Supplemental Benefit Rate per Hour: $1.50

(NYC Administrative Code §6-109)

HOMECARE SERVICES

Home Care Services

'Homecare Services' means the provision of homecare services under the city's Medicaid Personal Care/Home Attendant or Housekeeping Programs, including but not limited to the In-Home Services for the Elderly Programs administered by the Department for the Aging.
For homecare services provided under the Personal Care Services program, the wage and supplemental benefit rate above shall apply only as long as the state and federal government maintain their combined aggregate proportionate share of funding and approved rates for homecare services in effect as of the date of the enactment of this section.
For contractors or subcontractors providing homecare services, the supplemental benefit rate may be waived by the terms of a bona fide collective bargaining agreement with respect to employees who have never worked a minimum of eighty (80) hours per month for two consecutive months for that covered employer, but such provision may not be waived for any employee once a minimum of eighty (80) hours for two consecutive months has been achieved.

Effective Period: 7/1/2015 - 6/30/2016
Wage Rate per Hour: $10.00
Supplemental Benefit Rate per Hour: $1.50

(NYC Administrative Code §6-109)

SECURITY GUARD (ARMED)

For the above building service classification, see the Labor Law Section 230 Schedule.

SECURITY GUARD (UNARMED)

For the above building service classification, see the Labor Law Section 230 Schedule.

SERVICES TO PERSONS WITH CEREBRAL PALSY

Services To Person With Cerebral Palsy

'Services to Persons with Cerebral Palsy' means provision of services which enable persons with cerebral palsy and related disabilities to lead independent and productive lives through an agency that provides health care, education, employment, housing and technology resources to such persons under contract with the city or the department of education.

Effective Period: 7/1/2015 - 6/30/2016
Wage Rate per Hour: $10.00
Supplemental Benefit Rate per Hour: $1.50

(NYC Administrative Code §6-109)

TEMPORARY OFFICE SERVICES

Administrative Assistant

Effective Period: 7/1/2015 - 6/30/2016
Wage Rate per Hour: $33.89
Supplemental Benefit Rate per Hour: None

Cashier

Effective Period: 7/1/2015 - 6/30/2016
Wage Rate per Hour: $11.50
Supplemental Benefit Rate per Hour: None

Clerk (various)

Effective Period: 7/1/2015 - 6/30/2016
Wage Rate per Hour: $15.50
Supplemental Benefit Rate per Hour: None

Computer Assistant

Effective Period: 7/1/2015 - 6/30/2016
Wage Rate per Hour: $20.12
Supplemental Benefit Rate per Hour: None

Data Entry Operator

Effective Period: 7/1/2015 - 6/30/2016
Wage Rate per Hour: $16.38
Supplemental Benefit Rate per Hour: None

Receptionist

Effective Period: 7/1/2015 - 6/30/2016
Wage Rate per Hour: $15.29
Supplemental Benefit Rate per Hour: None

Secretary (various)

Effective Period: 7/1/2015 - 6/30/2016
Wage Rate per Hour: $19.58
Supplemental Benefit Rate per Hour: None

Word Processor

Effective Period: 7/1/2015 - 6/30/2016
Wage Rate per Hour: $18.32
Supplemental Benefit Rate per Hour: None

Overtime

Time and one half the regular hourly rate after 40 hours in any work week.

(Based on data from NYS Department of Labor Occupational Employment Statistics and US Department of Labor Bureau of Labor Statistics or NYC Administrative Code §6-109)

WINDOW CLEANER

For the above building service classification, see the Labor Law Section 230 Schedule.

Leonard A. Mancusi
SENIOR ASSISTANT COMPTROLLER

THE CITY OF NEW YORK
OFFICE OF THE COMPTROLLER
1 CENTRE STREET ROOM 1120
NEW YORK, N.Y. 10007-2341

ALAN G. HEVESI
COMPTROLLER

TELEPHONE: (212) 669-3622
FAX NUMBER: (212) 669-8499

MEMORANDUM

November 6, 2000

To *Agency Chief Contracting Officers*

From: *Leonard A. Mancusi*

Re: *Security at Construction Sites*

Prior to the enactment of Administrative Code §6-109, security guards on construction sites were not subject to prevailing wages. Security guards under the New York State labor law are covered under §230 which provides that prevailing wages are to be paid for security guards in existing buildings. §6-109 of the Administrative Code which was enacted in 1996 closed this loophole by including all security guards working pursuant to a city contract as a prevailing wage trade.

Although some construction contract boilerplate language has been amended to include §6-109, sub-contractors performing security services have advised us that they were not aware of this provision and, since traditionally, security guards were not a covered trade on construction sites, and they were not advised by a prime contractor that they would have to pay prevailing wages, they have not been doing so.

To avoid the possibility of issuing stop payments against prime contractors for the failure of their security service sub-contractors to pay

prevailing wages, we suggest that you write to all your existing security guard sub-contractors and their primes and in the future, upon approval of a security guard sub-contractor, advise the contractors of their obligation to pay prevailing wages under §6-109 of the Administrative Code.

As always, your cooperation is appreciated.

LAM:er
ACCO.SECURITY AT SITES

Department of Design and Construction

INFRASTRUCTURE DIVISION
BUREAU OF DESIGN

VOLUME 2 OF 3

_____
Contractor

_____

Dated_____, 20___

_____

APPROVED AS TO FORM
CERTIFIED AS TO LEGAL AUTHORITY

_____
Acting Corporation Counsel

_____

Dated_____, 20___

_____

Department of Design and Construction

THE CITY OF NEW YORK
DEPARTMENT OF DESIGN AND CONSTRUCTION
DIVISION OF INFRASTRUCTURE

30-30 THOMSON AVENUE
LONG ISLAND CITY, NEW YORK 11101-3045
TELEPHONE (718) 391-1000
WEBSITE www.nyc.gov/buildnyc

VOLUME 3 OF 3

SCHEDULE A
SPECIFICATIONS AND
REVISIONS TO STANDARD SPECIFICATIONS

FOR FURNISHING ALL LABOR AND MATERIALS NECESSARY AND REQUIRED FOR:

PROJECT ID: QED1014

REHABILITATION OF EXISTING TRUNK WATER MAINS IN CRESCENT STREET FROM 34TH AVENUE TO 31ST AVENUE; 31ST AVENUE FROM CRESCENT STREET TO 41ST STREET; AND 41ST STREET FROM 31ST AVENUE TO 25TH AVENUE

INCLUDING DISTRIBUTION WATER MAIN, SEWER AND TRAFFIC SIGNAL WORK

Together With All Work Incidental Thereto
BOROUGH OF QUEENS
CITY OF NEW YORK

FOR THE DEPARTMENT OF ENVIRONMENTAL PROTECTION
PREPARED BY
IN-HOUSE DESIGN

DECEMBER 30, 2015

06-704

SPECIFICATIONS AND STANDARDS OF NEW YORK CITY

The following New York City Department of Transportation (NYCDOT) reference documents are available on-line at:
http://www.nyc.gov/html/ddc/html/pubs/pubs_infrastdts.shtml or for purchase contact Ms. Vivian Valdez, (212) 839-9435

New York City Department of Transportation
Office of the Agency Chief Contracting Officer/Contract Management Unit
55 Water Street, Ground Floor (Bid Window)
N.Y., NY 10041

1. NYCDOT Standard Highway Specifications, August 1, 2015
2. NYCDOT Standard Highway Details of Construction, July 1, 2010
3. NYCDOT Division of Street Lighting Specifications
4. NYCDOT Division of Street Lighting Standard Drawings
5. NYCDOT Standard Specifications for Traffic Signals
6. NYCDOT Standard Drawings for Traffic Signals

The following reference documents for New York City Department of Environmental Protection (NYCDEP) are available on-line at:
http://www.nyc.gov/html/ddc/html/pubs/pubs_infrastdts.shtml or for pick up between 8:00 A.M. and 4:00 P.M. at 30-30 Thomson Avenue, 3rd Floor, Division of Infrastructure, Long Island City, N.Y. 11101.
Contact: Mr. Waqar Ahmad, Tel. (718) 391-2056

1. NYCDEP Standard Sewer and Water Main Specifications, July 1, 2014
2. NYCDEP Instructions for Concrete Specifications, Jan. 92
3. NYCDEP General Specification 11-Concrete, November 1991
4. NYCDEP Sewer Design Standards, (September 2007) Revised January 2009

The following reference documents for New York City Department of Environmental Protection (NYCDEP) are available on-line at:
http://www.nyc.gov/html/ddc/html/pubs/pubs_infrastdts.shtml or for pick up between 8:00 A.M. and 4:00 P.M. at 30-30 Thomson Avenue, 3rd Floor, Division of Infrastructure, Long Island City, N.Y. 11101.
Contact: Mr. Robert Kuhlmann, Tel. (718) 391-2145

1. NYCDEP Water Main Standard Drawings
2. Specifications for Trunk Main Work, dated July 2014
3. Standards for Green Infrastructure, latest version, available only on-line at:
http://www.nyc.gov/html/dep/html/stormwater/green_infrastructure_standards.stml

Water main work material specifications are available at the Department of Environmental Protection, 59-17 Junction Boulevard, 3rd Floor Low-Rise Building, Flushing, N.Y. 11373-5108.
Contact: Mr. Tarlock Sahansra, P.E., Tel. (718) 595-5302
E-mail: TSAHANSRA@DEP.NYC.GOV

Standard Specifications and Drawings for New York City Fire Department Communications facilities are available from the FDNY Facilities Management Bureau, Plant Operations Engineering, 316 Sgt. Beers Avenue Cluster 1 Box 16, Fort Totten, N.Y. 11359.
Contact: Mr. Ed Durkin, Tel. (718) 281-3933

Tree Planting Standards of the City of New York Parks & Recreation are available at the following Department of Parks & Recreation website: http://www.nycgovparks.org/pagefiles/53/Tree-Planting-Standards.pdf

SPECIFICATIONS AND STANDARDS OF PRIVATE UTILITIES

The Following reference document for Private Utility Work is available for pick up between 8:30 A.M. and 4:00 P.M. at 30-30 Thomson Avenue, First Floor Bid Procurement Room, L.I.C., N.Y. 11101.

1. CET SPECIFICATIONS AND SKETCHES dated November 2010

VOLUME 3 OF 3

TABLE OF CONTENTS

(NO TEXT ON THIS PAGE)

SCHEDULE "A"

(GENERAL CONDITIONS TO CONSTRUCTION CONTRACT)
(INCLUDING GENERAL CONDITIONS RELATED TO ARTICLE 22 - INSURANCE)

PART I. REQUIRED INFORMATION

INFORMATION FOR BIDDERS SECTION 26 BID SECURITY The **Contractor** shall obtain a bid security in the amount indicated to the right.	Required provided the TOTAL BID PRICE set forth on the Bid Form is $1,000,000 or more. Certified Check: 2% of Bid Amount or Bond: 10% of Bid Amount
INFORMATION FOR BIDDERS SECTION 26 PERFORMANCE AND PAYMENT BONDS The **Contractor** shall obtain performance and payment bonds in the amount indicated to the right.	Required for contracts in the amount of $1,000,000 or more. Performance Security and Payment Security shall each be in an amount equal to 100% of the Contract Price.
CONTRACT ARTICLE 14. DATE FOR SUBSTANTIAL COMPLETION The **Contractor** shall substantially complete the **Work** in the number of calendar days indicated to the right.	See Page SA-4
CONTRACT ARTICLE 15. LIQUIDATED DAMAGES If the **Contractor** fails to substantially complete the **Work** within the time fixed for substantial completion plus authorized time extensions or if the **Contractor**, in the sole determination of the **Commissioner**, has abandoned the **Work**, the **Contractor** shall pay to the **City** the amount indicated to the right.	For Each Consecutive Calendar Day Over Substantial Completion Time: $1,500.00
CONTRACT ARTICLE 17. SUB-CONTRACTOR The **Contractor** shall not make subcontracts totaling an amount more than the percentage of the total **Contract** price indicated to the right.	Not to Exceed 35% of the **Contract** Price
CONTRACT ARTICLE 21. RETAINAGE The **Commissioner** shall deduct and retain until the substantial completion of the **Work** the percent value of the **Work** indicated to the right.	5% of the Value of the **Work**
CONTRACT ARTICLE 22. **(Per Directions Indicated To The Right)**	See pages SA-5 through SA-9

CONTRACT ARTICLE 24. **DEPOSIT GUARANTEE** As security for the faithful performance of its obligations, the **Contractor**, upon filing its requisition for payment on **Substantial Completion**, shall deposit with the **Commissioner** a sum equal to the percentage of the **Contract** price indicated to the right.	1% of **Contract** Price
CONTRACT ARTICLE 24. **PERIOD OF GUARANTEE** Periods of maintenance and guarantee other than the period set forth in **Article 24.1** are indicated to the right.	Eighteen (18) Months, excluding Trees Twenty-Four (24) Months for Tree Planting
CONTRACT ARTICLE 74. **STATEMENT OF WORK** The **Contractor** shall furnish all labor and materials and perform all **Work** in strict accordance with the **Contract Drawings**, **Specifications,** and all **Addenda** thereto.	See **Contract Article 74**
CONTRACT ARTICLE 75. **COMPENSATION TO BE PAID TO CONTRACTOR** The **City** shall pay and the **Contractor** shall accept in full consideration for the performance of the **Contract**, subject to additions and deductions as provided in **Contract Article 75**, this said sum being the amount at which the **Contract** was awarded to the **Contractor** at a public letting thereof, based upon the **Contractor's** bid for the **Contract.**	See **Contract Article 75**
CONTRACT ARTICLE 78. **PARTICIPATION BY MINORITY-OWNED AND WOMEN-OWNED BUSINESS ENTERPRISES IN CITY PROCUREMENT**	See M/WBE Utilization Plan in the Bid Booklet

STANDARD HIGHWAY SPECIFICATIONS SECTION 6.40 LIQUIDATED DAMAGES FOR ENGINEER'S FIELD OFFICE If the Contractor fails to satisfactorily provide the field office and all equipment specified in **Section 6.40 - Engineer's Field Office**, and/or if a cited deficiency exceed seventy two (72) hours after notice from the Engineer in writing, or is permitted to recur, liquidated damages will be assessed in the amount specified herein for each subsequent calendar day or part thereof that a cited deficiency resulting in nonpayment, as described in **Section 6.40.5**, is not corrected.	For Each Calendar Day of Deficiency: $250.00
STANDARD HIGHWAY SPECIFICATIONS SECTION 6.70 LIQUIDATED DAMAGES FOR MAINTENANCE AND PROTECTION OF TRAFFIC	For each instance of failure to comply with the Maintenance and Protection of Traffic requirements within three (3) hours after written notice from the Engineer: $250.00 For each and every hour of failing to open the entire width of roadway to traffic the morning following a night/weekend work operation: $500.00
STANDARD HIGHWAY SPECIFICATIONS SECTION 7.13 LIQUIDATED DAMAGES FOR MAINTENANCE OF SITE If the Contractor fails to comply, within three (3) consecutive hours after written notice from the Engineer, with the requirements of **Section 7.13 - Maintenance of Site**, the Contractor shall pay to the City of New York, until such notice has been complied with or rescinded, the sum specified above per calendar day, for each instance of such failure, as liquidated damages and not as a penalty, for such default.	For Each Calendar Day, for Each Occurrence: $250.00

Date for Substantial Completion (Reference: Article 14)

The Contractor shall substantially complete the Work within the Final Contract Duration determined in accordance with the terms and conditions set forth herein.

The Base Contract Duration for this project is ___730___ consecutive calendar days ("ccds").

The Final Contract Duration shall be the Base Contract Duration when a check mark is indicated before the word "NO", below, and shall be the Base Contract Duration adjusted by the table set forth below when a check mark is indicated before the word "YES", below.

___√___ YES _____ NO

When the Final Contract Duration is indicated above to be adjusted by the table below, the table may increase the Base Contract Duration depending on the date of scheduled substantial completion to avoid a scheduled substantial completion of the Work during the winter months. The date of the scheduled substantial completion shall be determined by adding the Base Contract Duration to the date specified to commence work in the written Notice To Proceed. The Final Contract Duration shall then be determined as follows:

(a) Find the row that corresponds to the month of the substantial completion based on the Base Contract Duration added to the date specified to commence work in the written Notice To Proceed.
(b) Find the number of days to be added to the Base Contract Duration in the table below. Add that number of days to the Base Contract Duration to obtain the Final Contract Duration in consecutive calendar days.

Month Of Substantial Completion Based On The Base Contract Duration	Number Of Days Of Adjustment
January	150
February	120
March	90
April	60
May	30
June	0
July	0
August	0
September	0
October	0
November - December 15	0
December 16 - December 31	180

In addition, should Item No. 9.30 - STORM WATER POLLUTION PREVENTION exist in the Contract and the required Storm Water Pollution Prevention Plan (SWPPP) does not conform to NYSDEC's recommended Standards, an additional 60-ccds shall be added to the above Final Contract Duration.

(GENERAL CONDITIONS RELATING TO ARTICLE 22 - INSURANCE)

PART II. TYPES OF INSURANCE, MINIMUM LIMITS AND SPECIAL CONDITIONS

Note: All certificate(s) of insurance submitted pursuant to Contract Article 22.3.3 must be accompanied by a Certification by Broker consistent with Part III below and include the following information:

- **For each insurance policy, the name and NAIC number of issuing company, number of policy, and effective dates;**
- **Policy limits consistent with the requirements listed below;**
- **Additional insureds or loss payees consistent with the requirements listed below; and**
- **The number assigned to the Contract by the City (in the "Description of Operations" field).**

Insurance indicated by a blackened box (■) or by an X in a box (☒) to left will be required under this contract

TYPES OF INSURANCE (per Article 22 in its entirety, including listed paragraph)	MINIMUM LIMITS AND SPECIAL CONDITIONS
■ Commercial General Liability Art. 22.1.1	The minimum limits shall be $3,000,000 per Occurrence and $6,000,000 per Project Aggregate applicable to this **Contract.** Additional Insureds: (1) City of New York, including its officials and employees, with coverage at least as broad as ISO Form CG 20 10 and CG 20 37. (2) All person(s) or organization(s), if any, that Article 22.1.1(b) of the **Contract** requires to be named as Additional Insured(s), with coverage at least as broad as ISO Form CG 20 26. The Additional Insured endorsement shall either specify the entity's name, if known, or the entity's title (e.g., Project Manager). (3) The New York City Transit Authority (NYCTA), Manhattan and Bronx Surface Transit Operation Authority (MaBSTOA), Staten Island Rapid Transit Operation Authority (SIRTOA), Metropolitan Transportation Authority (MTA), its subsidiaries and affiliated companies. The Contractor shall furnish two (2) certificates of insurance to and the policy shall be endorsed to provide thirty (30) days advance notice to the Director, Risk Management, MTA Risk and Insurance Management Standards, Enforcement and Claims Unit, 2 Broadway, 21st Floor, New York, NY 10004, of any material change and/or cancellation. (4) Consolidated Edison Company Of New York

■ Workers' Compensation ■ Disability Benefits Insurance ■ Employers' Liability ☐ Jones Act ☐ U.S. Longshoremen's and Harbor Workers Compensation Act	Art. 22.1.2 Art. 22.1.2 Art. 22.1.2 Art. 22.1.3 Art. 22.1.3	Workers' Compensation, Employers' Liability, and Disability Benefits Insurance: Statutory per New York State law without regard to jurisdiction. **Note:** The following forms are acceptable: (1) New York State Workers' Compensation Board Form No. C-105.2, (2) State Insurance Fund Form No. U-26.3, (3) New York State Workers' Compensation Board Form No. DB-120.1 and (4) Request for WC/DB Exemption Form No. CE-200. The City will not accept an ACORD form as proof of Workers' Compensation or Disability Insurance. Jones Act and U.S. Longshoremen's and Harbor Workers' Compensation Act: Statutory per U.S. Law. ■ Additional Requirements: (1) NYCTA "OUTSIDE CONTRACT" INSURANCE REQUIREMENTS: Workers' Compensation Insurance (including Employer's Liability Insurance) with limits of not less than $2,000,000, which limit may be met by a combination of primary and excess insurance meeting the statutory limits of New York State. (2) Two (2) certificates of such insurance shall be furnished to the Director, Risk Management, MTA Risk and Insurance Management Standards, Enforcement and Claims Unit, 2 Broadway, 21st Floor, New York, NY 10004.
☐ Builders' Risk	Art. 22.1.4	100% of Total Value of **Work** **Contractor** the Named Insured; the **City** both an Additional Insured and one of the loss payees as its interests may appear. If the **Work** does not involve construction of a new building or gut renovation work, the **Contractor** may provide an installation floater in lieu of Builders Risk insurance. Note: Builders Risk Insurance may terminate upon **Substantial Completion** of the **Work** in its entirety.
■ Commercial Auto Liability	Art. 22.1.5	$2,000,000 per accident combined single limit If vehicles are used for transporting hazardous materials, the **Contractor** shall provide pollution liability broadened coverage for covered vehicles (endorsement CA 99 48) as well as proof of MCS 90. Additional Insureds: (1) City of New York, including its officials and employees. (2) The New York City Transit Authority (NYCTA), Manhattan and Bronx Surface Transit Operation Authority (MaBSTOA), Staten Island Rapid Transit Operation Authority (SIRTOA), Metropolitan Transportation Authority (MTA), its subsidiaries and affiliated companies. (3)

☐ Contractors Pollution Liability	Art. 22.1.6	$_____ per occurrence $_____ aggregate Additional Insureds: (1) City of New York, including its officials and employees. (2) (3)
☐ Marine Protection and Indemnity	Art. 22.1.7(a)	$_____ each occurrence $_____ aggregate Additional Insureds: (1) City of New York, including its officials and employees. (2) (3)
☐ Hull and Machinery Insurance	Art. 22.1.7(b)	$_____ per occurrence $_____ aggregate Additional Insureds: (1) City of New York, including its officials and employees. (2) (3)
☐ Marine Pollution Liability	Art. 22.1.7(c)	$_____ per occurrence $_____ aggregate Additional Insureds: (1) City of New York, including its officials and employees. (2) (3)

[OTHER] Art. 22.1.8 ■ Railroad Protection Liability Policy (ISO-RIMA or equivalent form) approved by Permittor covering the work to be performed at the designated site and affording protection for damages arising out of bodily injury or death, physical damage to or destruction of property, including damage to the Insured's own property and conforming to the following: • Policy Endorsement CG 28 31 - Pollution Exclusion Amendment is required to be endorsed onto the policy when environmental-related work and/or exposures exist. • Indicate the Name and address of the Contractor to perform the work, the Contract Number and the name of the railroad property where the work is being performed and the Agency Permit. • Evidence of Railroad Protective Liability Insurance, must be provided in the form of the Original Policy. A detailed Insurance Binder (ACORD or Manuscript Form) will be accepted pending issuance of the Original Policy, which must be provided within thirty (30) days of the Binder Approval.	$2,000,000 per occurrence $6,000,000 annual aggregate Named Insureds: (1) The New York City Transit Authority (NYCTA), Manhattan and Bronx Surface Transit Operation Authority (MaBSTOA), Staten Island Rapid Transit Operation Authority (SIRTOA), MTA Capital Construction Company, Metropolitan Transportation Authority (MTA), including its subsidiaries and affiliates, and the City of New York (as Owner) and all other indemnified parties. (2)

[OTHER] Art. 22.1.8

■ Professional Liability

A. The Contractor's Professional Engineer shall maintain and submit evidence of Professional Liability Insurance in the minimum amount of $1,000,000 per claim. The policy or policies shall include an endorsement to cover the liability assumed by the Contractor under this Contract arising out of the negligent performance of professional services or caused by an error, omission or negligent act of the Contractor's Professional Engineer or anyone employed by the Contractor's Professional Engineer.

B. Claims-made policies will be accepted for Professional Liability Insurance. All such policies shall have an extended reporting period option or automatic coverage of not less than two (2) years. If available as an option, the Contractor's Professional Engineer shall purchase extended reporting period coverage effective on cancellation or termination of such insurance unless a new policy is secured with a retroactive date, including at least the last policy year.

[OTHER] Art. 22.1.8 ■ Engineer's Field Office **Section 6.40, Standard Highway Specifications**	Fire insurance, extended coverage and vandalism, malicious mischief and burglary, and theft insurance coverage in the amount of $40,000

[OTHER] Art. 22.1.8

☐ The Following Additional Insurance Must Be Provided:

Umbrella/Excess Liability Insurance - The Contractor shall provide Umbrella/Excess Liability Insurance in the minimum amount of $10,000,000 per Occurrence and $10,000,000 in Aggregate. The policy terms and condition should be at least as broad as the underlying policies. The underlying policies should comply with the insurance provision as outlined by the contract. Defense cost should be in addition to the limit of liability. The City of New York, including its officials and employees, should be included as additional insured as respects to the noted project.

SCHEDULE A
(GENERAL CONDITIONS TO CONSTRUCTION CONTRACT)
(GENERAL CONDITIONS RELATING TO ARTICLE 22 – INSURANCE)

PART III. CERTIFICATES OF INSURANCE

All certificates of insurance (except certificates of insurance solely evidencing Workers' Compensation Insurance, Employer's Liability Insurance, and/or Disability Benefits Insurance) must be accompanied by one of the following:

(1) the Certification by Insurance Broker or Agent on the following page setting forth the required information and signatures;

-- OR --

(2) copies of all policies as certified by an authorized representative of the issuing insurance carrier that are referenced in such certificate of insurance. If any policy is not available at the time of submission, certified binders may be submitted until such time as the policy is available, at which time a certified copy of the policy shall be submitted.

CERTIFICATION BY INSURANCE BROKER OR AGENT

The undersigned insurance broker represents to the City of New York that the attached Certificate of Insurance is accurate in all material respects.

_____
[Name Of Broker or Agent (Typewritten)]

_____
[Address Of Broker or Agent (Typewritten)]

_____
[E-Mail Address Of Broker or Agent (Typewritten)]

_____
[Phone Number/Fax Number Of Broker or Agent (Typewritten)]

_____
[Signature Of Authorized Official, Broker or Agent]

_____
[Name And Title Of Authorized Official, Broker or Agent (Typewritten)]

State of .....)
) ss.:
County of .....)

Sworn to before me this _____ day of _____, 20__

_____
NOTARY PUBLIC FOR THE STATE OF _____

SCHEDULE "A"

(GENERAL CONDITIONS TO CONSTRUCTION CONTRACT)

PART IV. ADDRESS OF COMMISSIONER

Wherever reference is made in Article 7 or Article 22 to documents to be sent to the **Commissioner** (e.g., notices, filings, or submissions), such documents shall be sent to the address set forth below or, in the absence of such address, to the **Commissioner's** address as provided elsewhere in this **Contract**.

DDC Director, Insurance Risk Manager

30 - 30 Thomson Avenue, 4th Floor (IDCNY Building)

Long Island City, NY 11101

NO TEXT THIS PAGE

R - PAGES

REVISIONS TO THE NEW YORK CITY DEPARTMENT OF TRANSPORTATION STANDARD HIGHWAY SPECIFICATIONS

NOTICE

THE NEW YORK CITY DEPARTMENT OF TRANSPORTATION STANDARD HIGHWAY SPECIFICATIONS, DATED AUGUST 1, 2015, (WHICH INCLUDE, BUT ARE NOT LIMITED TO, "GENERAL CONDITIONS", "BASIC MATERIALS OF CONSTRUCTION", "COMBINED MATERIALS OF CONSTRUCTION", "CONSTRUCTION METHODS", "INSPECTION AND TESTING OF MATERIALS, ADJUSTMENTS FOR DEFICIENCIES, AND MAINTENANCE", AND "SUPPLEMENTAL CONSTRUCTION METHODS"), AS REVISED HEREIN (R-PAGES) AND BY ADDENDA ISSUED PRIOR TO THE OPENING OF BIDS, SHALL APPLY TO AND BECOME A PART OF THE CONTRACT.

ALL REFERENCES CONTAINED HEREIN (R-PAGES) ARE TO THE NEW YORK CITY DEPARTMENT OF TRANSPORTATION, STANDARD HIGHWAY SPECIFICATIONS, DATED AUGUST 1, 2015. SAID STANDARD HIGHWAY SPECIFICATIONS ARE HEREBY REVISED UNDER THE FOLLOWING REVISIONS:

1. AMENDMENTS TO STANDARD HIGHWAY SPECIFICATIONS, VOLUME I

2. AMENDMENTS TO STANDARD HIGHWAY SPECIFICATIONS, VOLUME II

(NO TEXT ON THIS PAGE)

1. AMENDMENTS TO STANDARD HIGHWAY SPECIFICATIONS, VOLUME I

The following amendments to the Contract Requirements shall become a part of and apply to the contract:

(NO TEXT)

2. AMENDMENTS TO STANDARD HIGHWAY SPECIFICATIONS, VOLUME II

(NO TEXT)

SEWER AND WATER MAIN REVISIONS TO SPECIFICATIONS

NOTICE

The Standard Sewer And Water Main Specifications of the Department of Environmental Protection (dated July 1, 2014), Sewer Design Standards of the Department of Environmental Protection (dated (September 2007) Revised January 2009), Water Main Standard Drawings of the Department of Environmental Protection (latest revisions), Specifications For Trunk Main Work of the Department of Environmental Protection (dated July 2014) and the Standard Highway Specifications (Volumes I and II) of the Department of Transportation (dated August 1, 2015) of The City of New York, shall be included as part of the contract documents. These said specifications and standard drawings are hereby revised under the following section headings:

A. NOTICE TO BIDDERS
B. AMENDMENTS TO THE STANDARD HIGHWAY SPECIFICATIONS
C. AMENDMENTS TO THE STANDARD SEWER AND WATER MAIN SPECIFICATIONS
D. AMENDMENTS TO THE SPECIFICATIONS FOR TRUNK MAIN WORK

(NO TEXT ON THIS PAGE)

A. NOTICE TO BIDDERS

(1) (A) The Contractor is advised that copies of the Standard Sewer And Water Main Specifications (dated July 1, 2014), Sewer Design Standards (dated (September 2007) Revised January 2009), Specifications For Trunk Main Work (dated July 2014) and Water Main Standard Drawings (latest revisions) are available to all prospective bidders at no cost upon presentation of receipt of purchase of Bid Package at the following location:

Department of Design and Construction
Division of Infrastructure
Design Services, Specifications, 3rd Floor
30-30 Thomson Avenue
Long Island City, NY 11101

(B) The Contractor is advised that copies of the Standard Highway Specifications (Volume I and II) (dated August 1, 2015), Standard Highway Details of Construction (latest revisions), Division of Street Lighting Specifications (latest revisions), Division of Street Lighting Standard Drawings (latest revisions), Standard Specifications for Traffic Signals (latest revisions), and Standard Drawings for Traffic Signals (latest revisions) are available to all prospective bidders for a fee at the following location:

Department of Transportation
55 Water Street, Ground Floor
New York City, NY 10041

(2) The Contractor is notified that a Notice To Proceed (NTP) date will be issued for work to commence within twenty-one (21) to thirty (30) days of Contract Registration.

(3) The Contractor shall furnish, install, maintain and subsequently remove temporary Protective Tree Barriers. Protective Tree Barriers shall be Type B, unless otherwise directed by the Engineer, and shall be constructed and installed as shown on the Protective Tree Barrier sketch in Department Of Transportation, Standard Highway Details Of Construction, Drawing No. H-1046A, as directed by the Engineer, and in accordance with Department of Parks and Recreation requirements.

(4) All utility locations and invert elevations are not guaranteed, nor is there any guarantee that all existing utilities, whether functional or abandoned within the project area are shown.

(5) All existing house connections shall be maintained and supported during construction. The Contractor shall replace any existing house connection damaged as a result of the Contractor's construction operations as ordered by the Engineer at no cost to the City.

(6) The Contractor is advised that any City owned light poles, traffic signals, street name signs, traffic signs and encumbrances including, but not limited to, underground conduit displaced as the result of the installation of the new sewers, water mains, catch basins, catch basin connections and appurtenances shall be replaced in kind and as directed by the Engineer. The cost of such work shall be deemed included in the prices bid for all items of work under this contract.

(7) The Contractor is notified that Victaulic Style 77 Coupling is no longer acceptable for use in any steel water main work. All reference to Victaulic Style 77 Coupling within the Standard Sewer And Water Main Specifications of the Department of Environmental Protection (dated July 1, 2014), the Water Main Standard Drawings of the Department of Environmental Protection (latest revisions), the Specifications For Trunk Main Work (dated July 2014), and the contract drawings, shall be replaced with Bolted Split-Sleeve Restrained Coupling.

(8) The Contractor is notified that wherever the Item No. "6.52" and words "flagger", "flagperson" and "flagman" are used in the contract documents and drawings it shall mean the Item No. "6.52 CG" and the words "Crossing Guard", respectively. The Contractor is advised that until the Comptroller of the

City of New York sets a prevailing wage rate for crossing guards, there are no prevailing wage rates for crossing guards.

(9) The Contractor is notified that the fuel cost per gallon used in the formula under **Sub-Article 26.2.8** of the Standard Construction Contract for **Extra Work** will be derived from the fuel price index for the United States East Coast published weekly by the United States Energy Information Administration ("USEIA"), and available on its website at http://www.eia.gov/petroleum/gasdiesel/ . The USEIA published cost per gallon for the applicable fuel on the East Coast for the week in which the first day of each calendar quarter during the contract term occurs (i.e., January 1st, April 1st, July 1st and September 1st) will be used in the reimbursement formula for all **Extra Work** invoiced that was performed during that calendar quarter. Should the USEIA stop publishing this fuel price index, the fuel cost per gallon will be determined by reference to a substitute index to be agreed upon by the Contractor and the City.

(10) The Contractor is responsible for any damage to the existing street and traffic signal equipment, including underground conduits and the safety of both pedestrian and vehicular traffic for the duration of the contract.

Should any conduits, cables or foundations need repair due to the Contractor's negligent operations during construction, all work shall be performed according to NYCDOT Bureau of Traffic's Standard Drawings and Specifications at the sole expense of the Contractor.

It is the Contractor's responsibility to secure an approved electrical contractor to perform all traffic signal work (if any). For list of approved electrical contractors, contact Mr. Michael R. LeFosse of New York City Department of Transportation at (718) 786-2236.

(11) The Contractor is advised that where the existing roadway pavement is designated to be replaced from curb to curb, then no full depth saw cutting of pavement for sewer and water main trenches will be required, except at the limits of full width pavement restoration. No separate or additional payment will be made for any saw cutting.

(12) The Contractor shall exercise extreme caution and take all necessary precautions in placing sheeting and excavating to prevent any damage to the existing NYC TRANSIT'S subway structures and its appurtenances during construction work throughout the project area. The Contractor shall take full responsibility to protect the said NYC TRANSIT'S subway structures and its appurtenances and any damage caused by the Contractor's operations shall be made good by the Contractor to the satisfaction of the Engineer at no additional cost to the City.

(13) The Contractor shall submit shop drawings to NYC Transit Authority showing all the details and methods of construction, such as, sheeting and bracing, including the Contractor's procedure and sequence of construction, supporting and/or protection of the existing TA's structures and its appurtenances, with necessary design calculations for approval prior to starting of the construction. The design shall be made by a New York State Licensed Professional Engineer skilled in this type of construction and as further evidenced by the imprint of Professional Engineer's seal and signature on all drawings. The cost of this work shall be deemed included in the price bid for all items of work under this contract.

B. AMENDMENTS TO THE STANDARD HIGHWAY SPECIFICATIONS

(1) **Refer** to Standard Highway Specifications Volume II (August 1, 2015), Page 369:
Add the following new **Section 6.34 A**:

SECTION 6.34 A - Temporary Chain Link Fence, 6'-0" High

6.34A.1. DESCRIPTION. Under this section, the Contractor shall furnish, erect, maintain, and remove, when directed, each type of Temporary Chain Link Fence as shown on the contract drawings and directed by the Engineer.

6.34A.2. MATERIALS AND METHODS. All materials and methods shall be as specified in **Section 6.34** of the Standard Highway Specifications, with the following modifications and additions:

Temporary Chain Link Fence to be furnished under Item No. 6.34 ACT - TEMPORARY CHAIN LINK FENCE, 6'-0" HIGH, shall consist of chain link fence fabric, top and bottom tension wires, gates, posts to be embedded in the pavement, and all necessary incidentals in accordance with the contract drawings and the directions of the Engineer.

Temporary Chain Link Fence to be furnished under Item No. 6.34 ACTP - TEMPORARY CHAIN LINK FENCE, 6'-0" HIGH, (WITH TOP AND BOTTOM RAILS AND POSTS MOUNTED ON STEEL PLATES), shall consist of chain link fence fabric, top and bottom rails for mounting a decorative mesh (to be furnished under Item No. 9.06 HW), gates, and posts. Posts shall be mounted on two (2) feet square steel plates with a vertical pin not less than two (2) feet high welded to the center of the plate, all as approved by the Engineer. The Contractor shall also be required to secure the fence with sand bags to hold fence in place, and all necessary incidental in accordance with the contract drawings and the directions of the Engineer.

When directed by the Engineer, the Contractor shall remove and dispose of the temporary chain link fence to the satisfaction of the Engineer. The Contractor shall then fill any holes left in the pavement with compacted clean sand to grade.

6.34A.3. MEASUREMENT. The quantities of Temporary Chain Link Fence to be measured for payment shall be the number of linear feet of each type satisfactorily installed, complete, measured in place, from center to center of end posts.

Payment will be made for each type of Temporary Chain Link Fence only for the initial installation at any location. Whenever temporary chain link fence are moved to a new location, as required by the plans or directed by the Engineer, payment will be made in the same manner as if it were an initial installation. Minor movement of temporary chain link fence from one side of the roadway to the other side, or rearrangement within a work area will not be considered as a movement to a new location and will not entitle the Contractor to additional payment.

No payment will be made: for movements of each type of temporary chain link fence made for the Contractor's convenience; for movement of temporary chain link fence at a given location at the end of a work period and subsequent replacement at the same location at the beginning of the next work period; for movement of temporary chain link fence at a given location during a work period and subsequent replacement at the same location during the same work period; or for the interchanging of temporary chain link fence between initial installations.

6.34A.4. PRICES TO COVER. The contract prices bid per linear foot for each type of "TEMPORARY CHAIN LINK FENCE" shall be a unit price per linear foot and shall cover the cost of all labor, materials, plant, equipment, insurance, and necessary incidentals required to furnish, install, maintain, and remove temporary chain link fence; all in accordance with the contract drawings, the specifications and the directions of the Engineer. Temporary chain link fence shall also include, but not limited to, any gates as may be required.

Payment will be made under:

Item No.	Item Description	Pay Unit
6.34 ACT	TEMPORARY CHAIN LINK FENCE, 6'-0" HIGH	L.F.
6.34 ACTP	TEMPORARY CHAIN LINK FENCE, 6'-0" HIGH, (WITH TOP AND BOTTOM RAILS AND POSTS MOUNTED ON STEEL PLATES)	L.F.

C. AMENDMENTS TO THE STANDARD SEWER AND WATER MAIN SPECIFICATIONS

(1) **Refer** to **Subsection 10.15 - Notice To Utility Companies, Etc., To Remove Structures Occupying Place Of Sewers, Water Mains Or Appurtenances**, Page I-11:
Add the following to **Subsection 10.15**:

(1) CONSOLIDATED EDISON COMPANY OF NEW YORK (CON EDISON)

There are CON EDISON facilities in the area of construction. The Contractor shall notify CON EDISON at least seventy-two (72) hours prior to the start of construction by contacting Ms. Theresa Kong at (212) 460-4834.

(2) VERIZON

There are VERIZON facilities in the area of construction. The Contractor shall notify VERIZON at least seventy-two (72) hours prior to the start of construction by contacting Mr. Aubrey Makhanlall at (718) 977-8165.

(3) TIME WARNER CABLE OF NEW YORK CITY

There are TIME WARNER CABLE facilities in the area of construction. The Contractor shall notify TIME WARNER CABLE at least seventy-two (72) hours prior to the start of construction by contacting Mr. John Piazza at (917) 888-4261.

(2) **Refer** to **Subsection 10.21 - Contractor To Notify City Departments**, Page I-13:
Add the following to **Subsection 10.21**:

(1) N.Y.C. D.E.P., BUREAU OF WATER AND SEWERS OPERATIONS

The Contractor shall notify Mr. Edward Coleman, P.E., Assistant Commissioner, Engineering and Planning at the Department of Environmental Protection, 59-17 Junction Blvd., 3rd floor low rise, Corona N.Y. 11368, at least thirty (30) days prior to the start of construction.

(2) NEW YORK CITY FIRE DEPARTMENT

The Contractor shall notify the Bureau of Fire Communications at least thirty (30) days prior to the start of construction by contacting Mr. Ed Durkin at (718) 624-4194 or (718) 624-3752.

(3) N.Y.C. DEPARTMENT OF TRANSPORTATION

The Contractor shall notify Mr. Steve Galgano, P.E. Chief of Signal/Street Lighting Operations, 34-02 Queens Blvd., Long Island City, N.Y. 11101 at (718) 786-3550, at least seventy-two (72) hours prior to the start of construction.

(4) N.Y.C. DEPARTMENT OF PARKS AND RECREATION

The Contractor shall notify the Parks Department at least seventy-two (72) hours prior to the start of construction by contacting Mr. Bill Steyer at (212) 860-1845.

(5) N.Y.C. TRANSIT AUTHORITY

(a) The Contractor shall notify Outside Projects at least seven (7) days prior to the start of construction.

The Contractor shall contact:

Mr. Mohamed Adam, P.E.

Project Engineer-Outside Projects
New York City Transit
2 Broadway, 7th Floor
New York, N.Y. 10004
Attention Ms. Alina Avadanei
Telephone No. (646) 252-3641

(b) The Contractor is advised that bus routes as well as bus stops, within the scope of this project may be affected during construction operations. The Contractor shall notify the Transit Authority at least two (2) weeks prior to the start of construction, in order to make the necessary arrangements as required under the NYC TRANSIT GENERAL NOTES included in **Section 10.25, paragraph (A)**, **Section 10.25 paragraph (B)**, and **Section 10.25 paragraph (C)** of this section.

Arrangements shall be made through:

Ms. Sarah Wyss
Director Of Short Range, Bus Service Planning (SRB)
New York City Transit
2 Broadway, 17th Floor
New York, N.Y. 10004
Telephone No. (646) 252-5517
sarah.wyss@nyct.com

(c) In addition, the Contractor is advised that construction operations might affect subway lines and stations; and NYCT facilities (i.e. manholes, ducts, etc.). The Contractor shall notify the Transit Authority as required and specified in **Section 10.25 paragraph (A)**, **Section 10.25 paragraph (B)**, and **Section 10.25 paragraph (C)** of this section.

(3) Refer to **Subsection 10.25 - Contractor To Carry Out Agreement Between City And Railroad Company Or Property Owner(s)**, Page I-14:
Add the following to **Subsection 10.25**:

(A) NYC TRANSIT GENERAL NOTES

For NYC TRANSIT notes see the contract drawings.

(B) NYC TRANSIT INSURANCE REQUIREMENTS

N.Y.C. TRANSIT INSURANCE: The Contractor (Permittee) shall indemnify and save harmless the City of New York and the New York City Transit (Permittor) in accordance with the following "Insurance Requirements" and proof that the necessary insurance is in effect will be required before work can commence:

NYCT "OUTSIDE CONTRACT" INSURANCE REQUIREMENTS

(1) The Permittee at its sole cost and expense shall carry or cause to carried and shall maintain at all times during the period of performance under this Agreement policies of insurance as herein below set forth below:

(A) Workers' Compensation Insurance - (including Employer's Liability Insurance) with limits as specified in Schedule "A", which limit may be met by a combination of primary and excess insurance meeting the statutory limits of New York State. The policy shall be endorsed to include Longshoreman's and Harbor Workers' Compensation Act/Maritime Coverage Endorsement and/or Jones Act Endorsement when applicable.

(B) Commercial General Liability Insurance - (I.S.O. 2001 Form or equivalent) approved by Permittor in the Permittee's name with limits of liability as specified in Schedule "A" for each occurrence on

a combined single limit basis for injuries to persons (including death) and damages to property. The limits may be provided in the form of a primary policy or combination of primary and umbrella/excess policy. When the minimum contract amounts can only be met when applying the umbrella/excess policy; the Umbrella/Excess Policy must follow form of the underlying policy and be extended to "drop down" to become primary in the event primary limits are reduced or aggregate limits are exhausted. Such insurance shall be primary and non-contributory to any other valid and collectable insurance and must be exhausted before implicating any Permittor/MTA policy available.

Such policy should be written on an occurrence form; and shall include:

- Contractual coverage for liability assumed by the Permittee under this agreement;
- Personal and Advertising Injury Coverage;
- Products-Completed. Operations;
- Independent Contractors Coverage;
- "XCU" coverage (Explosion, Collapse, and Underground Hazards) where necessary;
- Contractual Liability Exclusion, applicable to construction or demolition operations to be performed within 50 feet of railroad tracks, must be voided, where necessary; and,
- Additional Insured Endorsement (I.S.O. Form CG 20 26 07/04 version or equivalent) approved the Permittor naming:

  New York City Transit Authority (NYCTA), the Manhattan and Bronx Surface Transit Operating Authority (MaBSTOA), the Staten Island Rapid Transit Operating Authority (SIRTOA), MTA Capital Construction Co., the Metropolitan Transportation Authority (MTA) including its subsidiaries and affiliates, and the City of New York (as Owner).

(C) Business Automobile Liability Insurance Policy - (I.S.O. Form CA 00 01 10 01 or equivalent) approved by the Permittor is required if Permittee's vehicle enters Permittor property. The insurance must be in the name of the Permittee or its contractor entering the Permittor property with limits of liability in the amount specified in Schedule "A" for claims for bodily injuries (including death) to persons and for damage to property arising out of the ownership, maintenance or use of any owned, hired or non-owned motor vehicle.

(D) Railroad Protective Liability Insurance policy shall be required as specified in Schedule "A".

(E) Environmental/Pollution Exposures:

In the event environmental or pollution exposures exist, the Permittee shall require the environmental contractor or sub-contractor to provide the applicable insurance covering such exposure. The limits and type of insurance provided shall be satisfactory to the Permittor and will be confirmed to the parties prior to the start of the work.

(2) General Requirements Applicable To Insurance Policies:

(a) All of the insurance required by this Article shall be with Companies licensed or authorized to do business in the State of New York with an A.M. Best Company rating of not less than A-/VII or better and reasonably approved by the Permittor/MTA and shall deliver evidence of such policies.

(b) Except for Workers Compensation, all references to forms and coverages referred to above shall be the most recent used by the Insurance Services Office, Inc. (ISO") or equivalent forms approved by the Insurance Department of the State of New York, provided, however, that excess coverages may be written on forms reasonably acceptable to Permittor containing

provisions other than those contained in ISO forms but otherwise conforming in substance to the requirements of this Article.

(c) The Permittee or its Contractor performing the work shall furnish evidence of all policies before any work is started to the permittor:

For NYCT Contract Inspection
C/O Mr. John Malvasio
Director, MOW Engineering
130 Livingston Street, Room 8044F
Brooklyn, NY 11201
Telephone: (718) 694-1358

These policies must: (i) be written in accordance with the requirements of the paragraphs above, as applicable; (ii) be endorsed in form acceptable to include a provision that the policy will not be canceled, materially changed, or not renewed, unless otherwise indicated herein, at least thirty (30) days prior written notice to the Permittor c/o MTA Risk and Insurance Management (MTA RIM) Department - Standards, Enforcement & Claims Unit, 2 Broadway - 21st floor, New York, NY 10004; and (iii) state or be endorsed to provide that the coverage afforded under the contractor's policies shall apply on a primary and not on an excess or contributing basis with any policies which may be available to the Permittor/MTA, and also that the contractor's policies, primary and excess, must be exhausted before implicating any Permittor/MTA policy available. (iv) In addition, contractor's policies shall state or be endorsed to provide that, if a subcontractor's policy contains any provision that may adversely affect whether contractor's policies are primary and must be exhausted before implicating any Permittor/MTA policy available, contractor's and subcontractor's policies shall nevertheless be primary and must be exhausted before implicating any Permittor/MTA policy available. Except for Professional Liability, policies written on claims made basis are not acceptable. At least two (2) weeks prior to the expiration of the policies, contractor shall endeavor to provide evidence of renewal or replacement policies of insurance, with terms and limits no less favorable than the expiring policies. Except as otherwise indicated in the detailed coverage paragraphs below, self insured retentions and policy deductibles shall not exceed $100,000, unless such increased deductible or retention is approved by Permittor/MTA. The Permittee shall be responsible for all claim expense and loss payments within the deductible or self-insured retention. The insurance monetary limits required herein may be met through the combined use of the insured's primary and umbrella/excess policies.

(d) Certificates of Insurance may be supplied as evidence of policies of the above policies, except for Policy (D) Railroad Protective Liability Insurance Policy. However, if requested by the Permittor, the Permittee shall deliver to the Authority, within forty-five (45) days of be request, a copy of such policies, certified by the insurance carrier as being true and complete. The Railroad Protective Liability Insurance Policy must be provided in the form of the Original Policy. A detailed Insurance Binder may be provided, ACORD or Manuscript Form, pending issuance of the Original Policy. The Original Policy must be submitted to MTA RIM within thirty (30) days of the Binder Approval.

(e) If a Certificate of Insurance is submitted, it must: (1) be provided on the Permittor Certificate of Insurance Form or MTA Certificate of Insurance Form for Joint Agency Agreements; (2) be signed by an authorized representative of the insurance carrier or producer and notarized; {3) disclose any deductible, self-insured retention, sub-limit, aggregate limit or any exclusions to the policy that materially change the coverage; (4) indicate the Additional Insureds and Named Insureds as required herein, along with a <u>physical copy</u> of the Additional Insured Endorsement (I.S.O. Form CG 20 26 07/04 version or equivalent), as applicable and the endorsement(s) must include policy number(s); (5) reference the Contract by number on the face of the certificate; and (6) expressly reference the inclusion of all required endorsements.

(f) The minimum amounts of insurance required in the detail description of policies (A), (B), (C), and (D) above shall not be construed to limit the extent of the Permittee's liability under this Agreement.

(g) If, at any time during the period of this Agreement, insurance as required is not in effect, or proof thereof is not provided to the Permittor, the Permittor shall have the options to: (i) direct the Permittee to suspend work or operation with no additional cost or extension of time due on account thereof; or (ii) treat such failure as an Event of Default.

(C) NYC TRANSIT CURRENT AND FUTURE PROJECTS

The Contractor is notified of the following:

(1) The following subway lines are within the area of this project:
The **BMT N Train – Astoria Line** is running along 31st Street.

(2) The Contactor can obtain NYC Transit Structural Drawings by contacting Mr. Chenthitta Gopalakrishnan at (646) 252-3614.

The Contractor shall also obtain from Mr. Chenthitta Gopalakrishnan the following Drawing showing Power Engineering Activities for the area of this project:

- Drawing No.
- P-378 - Duct Assignment - Vicinity of 36th Avenue Station - **Astoria Line - BMT – Queens**

(3) The project might have an impact at the following stations:
(a) 30th Avenue-Grand Avenue Station for the IND N Train - Astoria Line

(4) The following tables showing NYC Transit's current and planned projects that may impact and/or interfere with this project might require the Contractor to coordinate construction work with NYCT contractors. These tables are for information only:

Contract	Project Title	Design Manager/ Tel. No.	Const. Manager/ Tel. No.	Resident Eng./ Tel. No.
DT01-1460 A37628	Stations Sandy Resiliency - EBCS	S. Ragheb/ (646) 252-3427	J. Singh/ (718) 613-0027	
ST22-1530 A46020	Station Renewal Broadway/ Astoria	V. Patel/ (646) 252-4249	Undesignated	
ST21-0584 A36953	Station Comp Stair (S1/S3):Bway/AST	V. Patel/ (646) 252-4249	S. Abraham/ (646) 252-4763	
ST12-7224 W32697	Public Address/Cust InfoPA/CIS: 44 Stns: Cabinets	D.Wesley/ (646) 252-3061	J.Diaz/ (646) 790-2101	O. Dooknah/ (718) 790-2107
ST21-0584 A36954	Station Comp Stair (S2/M2):Bway/AST	V. Patel/ (646) 252-4249	S. Abraham/ (646) 252-4763	
ST01-0868 A37602	Stations HP: 6 Stns(JACOBSPk1)	D.Wesley/ (646) 252-3061	M. Yu/ (646) 252-3487	L. J. Baptiste/ (718) 613-0156
ST21-0584 A36168	Stations Comp Stn Comp: 3 Locs/AST Dsgn	V. Patel/ (646) 252-4249	Undesignated	
ST22-1526 A37628	Stations Renewal	S. Ragheb/ (646) 252-3427	J. Singh/ (718) 613-0027	
ST22-1526	Station Renewal	V. Patel/	Undesignated	

A46019	30 Avenue/ Astoria	(646) 252-4249		
ST12-7224 W32697	Public Address/Cust InfoPA/CIS: 44 Stns: Cabinets	D.Wesley/ (646) 252-3061	J.Diaz/ (646) 790-2101	O. Dooknah/ (718) 790-2107

(4) **Refer** to **Subsection 10.30 - Contractor To Provide For Traffic**, Page I-15:
Add the following to **Subsection 10.30**:

(1) Traffic Stipulations:

The Contractor shall refer to the Traffic Stipulations (seven (7) pages) that are attached to the end of this section, and as directed by the Engineer.

(5) **Refer** to Page VI-45:
Add the following new **Section 60.61**:

SECTION 60.61
FURNISHING, DELIVERING AND INSTALLING STRAIGHT STEEL WATER MAIN PIPE BY SLIP-LINING METHOD

60.61.1 INTENT

This section describes the installation, field testing and disinfection of steel pipe necessary to complete the slip-lining of existing trunk water mains.

60.61.2 WORK INCLUDED

The Contractor shall furnish all labor, materials and equipment and shall do all work necessary to slip-line the existing trunk water main with a steel pipe as shown on the contract documents and/or as ordered by the Engineer.

The Contractor shall install the steel pipe (liner pipe) inside the existing trunk water main pipe (host pipe). The liner pipe shall be properly braced, supported and electrically isolated from the host pipe. Proper precautions shall be taken by the Contractor to prevent floatation or motion of the liner pipe during the grouting operation. The braces/supports/spacers shall be installed and positioned in accordance with this specification and/or the recommendations of tunneling engineers, grouting specialists and the manufacturer. The braces/supports/spacers shall not inhibit the flow of grout, and shall be approved by the Engineer.

The Contractor shall consult with tunneling engineers, grouting specialist and the pipe manufacturer regarding the installation of steel liner pipe using the slip-lining method. The Contractor shall be responsible for a successful installation.

The Contractor shall carry out the Contractor's operations in strict accordance with OSHA and the manufacturer's safety requirements.

60.61.3 SUBMITTALS

The Contractor shall submit to the Engineer a detailed description of the proposed method of installation including procedures of a test run, locations and dimensions of insertion/receiving pits, installation procedures, and testing and disinfection procedures for review and approval.

These submittals shall include shop drawings and procedural details to allow the Engineer to evaluate the procedure to be used. Casing spacer design, all pertinent dimensions, material properties, and design calculations must be included.

The Contractor shall also submit a proposed insertion plan for grout fill of annular space between the steel liner pipe and host pipe. Grouting fill of annular space plan shall include details of grout fill materials (including source), installation procedures, equipment utilized, grout fill quality control measures, and means of protecting new water main facilities during grout fill placement. Such method shall be capable of filling all voids between the host pipe and the steel liner pipe for the entire length, and shall not be capable of damaging the steel liner pipe and its exterior coating, nor capable of damaging or misaligning the brace and support spacers installed to align and electrically insulate the steel liner pipe, nor capable of causing any leakage of grout to the outside soil area of the host pipe.

60.61.4 MATERIALS

(A) Steel pipe, fittings and appurtenances shall be in accordance with **New York City Department of Environmental Protection (NYCDEP) Specifications For Trunk Main Work. (This publication includes Special Provisions For Trunk Main Work; and, Specification For Furnishing, Delivering And Laying Steel Pipe And Appurtenances**, except as follows:

(1) Exterior surface of the steel pipe (liner pipe) to be installed in the existing trunk water main pipe (host pipe), which will be grout filled with Low Weight Cement grout, shall be coated with polyurethane coating as per NYCDEP Specifications for Trunk Main Work.

(2) All Liner Pipes shall have bell/spigot push stops. A 5/8" Round Bar– 4" long shall be placed at 120 degree increments on the spigot. The insertion of the spigot shall not exceed two and a half inches (2 1/2") into the bell. For reference of Typical Pipe Push Stops for Liner Pipe see attachment "A" attached to the end of this Addendum. The Contractor shall submit shop drawings to the Engineer for approval.

(B) Casings spacers shall be GPT Model C12GN2 as manufactured by Garlock Pipeline Technologies, 6455 Clara Road, suite 300, Houston TX 77041, (www. gptindustries.com), or approved equal.

Casing spacers shall have a minimum 12-gauge steel band and 10-gauge risers. Riser shall be connected to a band with three (3) one (1) inch weld beads on each side of the riser. The band, risers and connecting studs shall be welded and grit blasted at the factory before the application of a heat fused fluidized bed thermo set crossed-linked Epoxy coating of between 10-16 mils thickness. The cross-linked epoxy coating shall provide good resistance to acids and alkalies and excellent resistance under ASTM B117 salt spray tests. The spacers shall have a flexible PVC inner liner. Runners shall be high pressure molded 30% glass reinforced nylon with a minimum compressive strength of 18,000 psi per ASTM D695. The runners shall be 2.0-in in width, 1.5-in high and a minimum of 11-in long.

There shall be a minimum of 8 runners equally spaced around the circumference of the pipe. The runners shall be attached to the10-gauge riser by three (3) 3/8 in welded steel studs and lock nuts which shall be recessed ½ in (0.50") below the wearing surface of the runner. The recess shall be filled with a corrosion inhibiting filler. (Threaded bolts/nuts and threaded studs are not acceptable alternatives for attaching skids.) The band sections shall be bolted together with eight (8) 5/16" x 2 ½" cadmium plated studs, and sixteen (16) nuts and washers per band section. There shall be four (4) sections per casing spacer.

Casing spacers shall be manufactured at a facility that has a Registered ISO 9001:2000 Quality Management System. Copy of current ISO 9001:2000 Registration shall be provided with material submittal. Manufacturer shall supply certification of gauged steel used to manufacturer spacers and the final design shall be approved by a Licensed Professional Engineer Registered in the State of New York. An engineer from the casing spacer manufacturer shall be hired by the installing contractor for technical guidance for the first day(s) of installation by the contractor's crew. Each new crew shall be required to undergo this technical guidance during their initial installation efforts.

(C) Grout utilized to fill the voids between the existing trunk main pipe and the steel liner pipe shall be Low Weight Cement Grout - Mearlcrete Cellular Concrete manufactured by the Mearl Corporation or approved equal.

(1) Low Weight Cement Grout

(a) Grout shall consist of neat Portland cement, water, Mearlcrete Foam Liquid concentrate and other materials as recommended by the Mearl Corporation or approved equal.
(b) Portland cement shall comply with the requirements of **General Specification 11 - Concrete, as modified in Section 23.01**, and shall be Type II.
(c) Mixing water shall be a maximum of six (6) gallons per bag of cement (water/cement ratio is 0.53), and be potable, free from deleterious amounts of acid, alkali, salts, oils and organic materials.
(d) Wet Density shall be 95-lb/ft^3 maximum.
Dry Density shall be 90-lb/ft^3 maximum.
Compressive Strength shall be 1,000-psi minimum.

60.61.5 HANDLING, FIELD JOINTING, ETC.

Except as otherwise shown on the drawings, all pipe ends shall be bell and spigot style for field lap welding from the interior of the pipe only. Exterior welds will not be required for installing steel water main pipe by slip-lining method.

Tapped holes for air pressure testing of lap joints are not required.

After approval of circumferential weld(s) by the Engineer, the Contractor shall apply cement mortar lining to all bare steel inside the pipe at the joint in one continuous application for the full circumference of the pipe.

The Contractor shall carry out the Contractor's operation in strict accordance with OSHA safety requirements. The Contractor shall provide adequate ventilation in the lining pipe whenever a person enters into the pipe. Air quality shall be tested immediately prior to each entry.

Contractor shall allow access to the Engineer to perform inspection of each weld as it is completed.

Non-Destructive Testing: Contractor shall perform magnetic particle and/or dye penetrant testing on all circumferential welds for the whole circumference, as directed by the Engineer. The Engineer may direct the Contractor to perform an additional complete test pass of a circumferential weld, or perform an additional test on a portion of a circumferential weld at no additional cost to the City. Testing shall be performed by a qualified weld inspection and testing firm under subcontract to the Contractor meeting the qualifications specified below and having the written approval of the Engineer.

(1) Qualifications: The firm performing the testing shall have a minimum of ten (10) years experiences in structural weld testing and inspection; and shall have completed at least two (2) projects in the last five (5) years specifically involving weld testing on steel pipeline carrying pressurized gas or liquids. Personnel performing the testing shall possess current American Society for Non-Destructive Testing, NDT Level III Certification and shall have adequate experience testing welds on steel pipelines.

(2) Magnetic Particle Testing: Procedures and acceptance criteria shall be in accordance with ASTM E709.

(3) Dye Penetrant Testing: Procedures and acceptance criteria shall be in accordance with ASTM E1417. Following each test, all residual material shall be thoroughly removed from the pipeline.

(4) Report: Records of each test shall be submitted to the Engineer within twenty-four (24) hours of the completion of each test.

60.61.6 CLEANLINESS

The inside and outside of the steel liner pipe shall be thoroughly cleaned before installation and kept clean during installation. Pipe ends shall be capped or plugged as necessary to maintain cleanliness throughout installation.

60.61.7 PREPARATION OF EXISTING HOST PIPE

(A) EXCAVATION OF INSERTION AND RECEIVING PITS

The Contractor shall excavate Insertion and Receiving Pits at the locations as shown on the Contract Drawings and /or approved by the Engineer in order to perform examination, cleaning, inspecting and installation work.

The location, number and dimensions of insertion and receiving pits shall be kept to a minimum taking into account any restrictions imposed by the insertion technique, the use of roadway and existing subsurface facilities.

The excavated pits shall be dewatered wherever required due to groundwater conditions. The Contractor shall lower and maintain the groundwater level below the invert of the existing pipe at all times during construction by dewatering means to prevent inflow of water or water and soil into the pit.

(B) CUTTING OF EXISTING PIPE

The Contractor shall excavate and remove the minimum length of existing pipe necessary for the liner insertion and receiving operations as approved by the Engineer.

The existing main shall be cut square using an approved power operated cutting machine, leaving no split or fractured ends. (Hammer and chisel or "squeeze" type cutters shall not be used to cut the pipe.) Every care shall be taken to protect the pipeline from damage.

All cut faces of the existing main shall be chamfered on the inside surface to a suitable profile to prevent damage to the steel liner pipe during or after insertion.

Edge guards or other means of protecting the liner from host pipe edges at insertion points must be submitted to the Engineer for review and approval.

No dirt, debris, groundwater or other foreign matter except for materials required for the examination, cleaning, inspecting or slip-lining shall be allowed to enter the existing pipeline.

(C) ROUTE SURVEY

A thorough examination of the route of the existing pipeline shall be made before cleaning and installation work commences. This should include a pipeline location survey with equipment for locating any changes in direction, valves, bends and other fittings that may impede the insertion of the steel liner pipe.

(D) CLEANING

The Contractor shall submit method of cleaning the host pipe to the Engineer for approval. The Contractor shall remove all sediment, protrusions, tuberculation, deposits, loose or deteriorated remains of any original coatings and other foreign materials from the inside of the pipe to produce a clean and finished inner surface that will not interfere with the insertion of the steel pipe through the existing host pipe.

Pipe end rollers or cones shall be used at all times during cleaning and any other operation involving winching through the main.

(E) INSPECTION

As soon as possible, after completion of the cleaning operation, the Engineer will conduct a visual walk-through inspection of the existing pipe to examine the success of cleaning and removal of intrusions, structurally deteriorated areas, obstructions, separated joints, existing connections (air cock, blow-off and outlet openings), etc., and to identify any defects so that repairs, if necessary, can be made. No steel pipe liner shall be installed until authorized by the Engineer.

In the event of intrusions and/or openings being detected (other than opening for grouting operation) prior to or during the cleaning of the main, the Contractor shall permanently close/plug and seal the opening using an approved method to the satisfaction of the Engineer.

In the event an intrusion, opening or a separated joint is detected and cannot be repaired internally in the opinion of the Engineer, the Contractor shall excavate and expose the main and shall cut out a short section of the pipe as required and refit a new section of pipe as ordered by the Engineer.

60.61.8 INSTALLATION OF LINER PIPE

(A) TEST RUN

Prior to ordering the casing spacers and liner pipes, the Contractor shall perform a test run of the existing host pipe to ensure the proposed sliplining operation can be achieved successfully and to the satisfaction of the Engineer. A Test Pig shall be fabricated and run through the host pipe. The Test Pig shall be a minimum 10 feet long liner pipe with the exact configuration, exterior coating and interior cement lining of the proposed liner pipe. The Test Pig shall also be assembled with two complete sets of casing spacers proposed for the sliplining operation, and simulate the weight of the host pipe without water.

Where impediments to successful slip lining are determined and/or located, remedial action shall be identified and submitted for review and resolution. This shall be completed prior to manufacturing of all the required casing spacers.

(B) CASING SPACERS

Casing spacers shall be utilized to provide dielectric separation between the host pipe and the liner pipe in the sliplining operation. One casing spacer shall be installed within two (2) to three (3) feet of the end of each section of carrier pipe with a maximum spacing between casing spacers not to exceed seven (7) feet on center. Casing spacers are designed to protect the liner pipe corrosion coating and electrically isolate the liner pipe from the existing host pipe.

(C) INSTALLATION

The installation method used by the Contractor shall be such that no damage will occur to the new steel pipe when it is sliplined.

The Contractor shall install the steel liner pipe inside the host pipe. The steel liner pipe shall be properly braced and supported with spacers that are electrically insulated from the host pipe. The braces/supports/spacers shall be installed and positioned in accordance with this specification and/or the manufacturer's recommendations, shall not inhibit the flow of grout, and shall be approved by the Engineer. Proper precautions shall be taken by the Contractor to prevent floatation or motion of the steel pipe during the grouting operation.

Electrical isolation must be monitored during installation and electrical resistance measurements shall be made every day following pipe installation by the contractor in the presence of the Engineer. The electrical resistance between any section of the liner pipe and the host pipe shall not be less than 500-ohms. Any values less than 500-ohms shall be resolved before proceeding with additional pipe slip lining at the contractor's expense. Unacceptable resistance values indicate that there is contact between the host pipe and the liner pipe that may require insert pipe removal to determine the problem and resolve.

Steel liner pipe sections shall be field jointed in accordance with **Subsection 60.61.5**. While the liner is being drawn into the existing trunk main, it shall be adequately supported in the insertion/receiving pits.

Sacrificial anode cathodic protection for the liner pipe shall be provided in the direct buried section.

(D) INSTALLATION PROCEDURES

The Contractor shall submit to the Engineer a detailed description of the proposed method of installation for review and approval.

The Contractor shall push and/or pull the slipliner pipe into place. If pushing the pipe, the contractor should utilize a hydraulic jacking machine that shall have the force to push the pipe into place without any damage to the pipe ends.

The winch to guide the liner pipe shall be hydraulically operated and capable of providing the necessary load. It shall be equipped with a load gauge that reads directly the winching force. This shall be recorded every time a pull starts and every fifty (50) feet thereafter. Pulley wheels shall be provided to ensure a straight pull along the line of the trunk main. The measuring device shall be calibrated and have a current test certificate issued by an independent testing house recommended by the steel liner pipe manufacturer. The winch shall be equipped with a tension limiting device which can be set to ensure that the winch force imparted to the pipe cannot exceed the maximum load permitted.

The Contractor shall supply sufficient cable in one continuous length so that the pull may be continuous between approved winching points.

The cable shall be of an anti-twist type.

All winching cable and associated components (hooks, shackles, etc.) shall have a safe working load of at least 1.5-times the maximum possible tension generated by the winch.

The winch shall be adequately restrained such that all reaction forces are contained within the excavation and do not induce ground movement.

The area containing the winch and the winch cable shall be regarded as a "hazard zone", and be securely fenced off. No person will be allowed within the hazard zone during winching operations other than the winch operative and/or persons authorized by the operative. All winching equipment must be provided with safety cage and supports so that it may be operated safely without injury to persons or property.

(E) INSPECTION AND INITIAL TESTING

The entire installation procedure shall be rigorously inspected as herein specified, but inspection shall not relieve the Contractor of responsibility to furnish material and perform work in accordance with the specifications. If at any time it is found that the pipe lining procedure is not in accordance with these specifications, the liner so installed will be subject to rejection.

The Contractor shall furnish the Engineer reasonable assistance, without charge, for inspection and for obtaining such information as the Engineer desires in respect to the progress and manner of the work that are being performed.

After the steel pipe liner has been inserted into the existing water main, it shall be given a combined pressure and leakage test in accordance with the requirements of the applicable portions of **New York City Department of Environmental Protection (NYCDEP) Specifications For Trunk Main Work. (This publication includes Special Provisions For**

Trunk Main Work; and, Specification For Furnishing, Delivering And Laying Steel Pipe And Appurtenances.

If a section fails to pass the pressure and leakage test, the Contractor shall do everything necessary to locate, uncover and repair or replace the defective pipefitting, or joint, all at the Contractor's own expense.

(F) GROUT FILL AROUND LINERS

After approval by the Engineer the entire annular space between the inside of the host pipe and the outside of the steel liner pipe shall be completely filled with grout in one continuous uninterrupted operation in a manner to prevent occurrence of any voids between the host pipe and the liner pipe.

The grouting process is to be completed from pit to pit. Watertight bulkheads shall be placed on both ends of the pipe so that the annulus will be blocked off. Air relief valves shall be provided at both ends of the line. The grout shall be poured in from a filler pipe on the downstream end and allowed to flow through gravity from one end of the pipe to the other. When the grout runs out of the upstream relief valve, the grouting operation is completed.

The grout fill shall be placed by pneumatic or pumping equipment under a pressure between ~~10~~ 5 and 15-psi to ensure that the entire void space has been evenly and completely filled. The pressure must be continuously monitored and care must be taken to avoid pressures above 15-psi. Equipment and methods for placement of the grout fill will be subject to review by the Engineer.

The volume of the grout being placed shall be monitored and recorded. A comparison between the theoretical volume and the actual volume of grout placed shall be done and any discrepancies shall be brought to the attention of the Engineer.

(G) PIECING-UP

After the completion of the grouting operation the removed sections of the existing pipeline (e.g. at insertion/receiving pits, valves, connections, etc.) shall be replaced in accordance with the contract plans and specifications and/or as ordered by the Engineer.

60.61.9 DISINFECTION/CHLORINATION

Once all steel liner pipe and pipe work is completed between two valves, the Contractor may proceed with the disinfection/chlorination procedure.

The Contractor shall perform chlorine disinfection of the newly installed water mains within the guidelines of AWWA-C651 latest revision and as per applicable portions of **New York City Department of Environmental Protection (NYCDEP) Specifications For Trunk Main Work. (This publication includes Special Provisions For Trunk Main Work; and, Specification For Furnishing, Delivering And Laying Steel Pipe And Appurtenances** and/or as ordered by the Engineer.

60.61.10 FINAL PRESSURE TESTING AND RECOMMISSIONING

Pressure testing and recommissioning of the newly installed water main shall be done in accordance with the applicable portions of **New York City Department of Environmental Protection (NYCDEP) Specifications For Trunk Main Work. (This publication includes Special Provisions For Trunk Main Work; and, Specification For Furnishing, Delivering And Laying Steel Pipe And Appurtenances** and/or as ordered by the Engineer. The Contractor shall subject the water main and appurtenances to a proof test by water pressure of not less than 150-psi.

60.61.11 MEASUREMENT

The quantity of steel water main pipe slip-lining to be measured for payment shall be the number of linear feet of steel water main pipe slip-liner of each size actually placed, complete, all in accordance with the contract drawings and specifications and to the satisfaction of the Engineer, measured along the centerline of the water main.

60.61.12 PRICE TO COVER

The contract price for "FURNISHING, DELIVERING AND INSTALLING STRAIGHT STEEL WATER MAIN PIPE BY SLIP-LINING METHOD" shall be the unit price bid per linear foot for each size straight steel water main pipe slip-lining and shall cover the cost of all labor, materials and equipment required or necessary for the surveying, cleaning, inspecting, test run with test pig, slip-lining with casing spacers, initial testing, grouting, disinfecting/chlorinating, final pressure testing and recommissioning of steel water main pipe slip-liner, including the earth excavation of all materials of whatever nature encountered (See **Section 40.03 - Earth Excavation**); sheeting and bracing; backfilling; compacting; sampling; testing; and furnishing and installing all other items necessary to complete this work and do all work incidental thereto, all in accordance with the contract drawings and specifications and as directed by the Engineer.

Included in the price bid hereunder shall be the cost of all labor, material and equipment required to excavate and setup insertion and receiving pits (including initial saw cutting and removal of the existing pavements, earth excavation of all materials of whatever nature encountered (See **Section 40.03 - Earth Excavation**); sheeting and bracing; dewatering; bridging; backfilling and compaction, cleaning up, disposal of surplus and rejected excavated materials, etc.).

Also included in the price hereunder shall be the cost of all labor, material and equipment required to cut, remove and dispose of sections of existing trunk water mains (together with any concrete and brick masonry structures) for access at insertion/receiving pits and preparation of existing edges of main for slip-lining.

Also included in the price hereunder shall be the cost of all labor, material and equipment required to complete the hydrostatic pressure testing as per **section 60.61.10** (including but not limited to temporary bulkhead / cap, etc., complete).

60.61.13 SEPARATE PAYMENT

Payment for all labor, materials and equipment required or ordered to replace, complete, those portions of removed existing trunk water mains with new steel pipe, valves, appurtenances, connections, etc., shall be made under the respective bid items furnishing, delivering, laying/installing steel pipe, appurtenances, connections, setting valves, etc. Also included in the prices bid for the respective bid items shall be the cost for all labor, materials and equipment required for any additional excavation, and additional or removed and reinstalled sheeting and bracing required in order to remove the portions of existing trunk water mains required or ordered.

Payment for concrete, masonry and reinforcing and structural steel required for reconstruction of new manholes shall be made under the respective bid items.

Payment for Furnishing, Delivering And Installing Straight Steel Water Main Pipe By Slip-Lining Method will be made under the Item Number as calculated below:

The Item Numbers for Furnishing, Delivering And Installing Straight Steel Water Main Pipe By Slip-Lining Method have eleven characters. (The decimal point is considered a character, the third character.)

(1) The first five characters shall define Furnishing, Delivering And Installing Straight Steel Water Main Pipe By Slip-Lining Method:

60.61

(2) The sixth, seventh and eighth characters shall define Furnishing, Delivering And Installing Straight Steel Water Main Pipe By Slip-Lining Method:

SLM - Furnishing, Delivering And Installing Straight Steel Water Main Pipe By Slip-Lining Method

(3) The ninth and tenth characters shall define the Diameter of the Straight Steel Water Main Pipe. (The ninth and tenth characters representing the unit of inches for the Diameter of the Steel Water Main Pipe.) See example below:

08 - 8"
36 - 36"

(4) The eleventh character shall define the Straight Steel Water Main Pipe:

S - Straight Steel Water Main Pipe

(5) Examples of Item Numbers together with Description and Pay Unit as provided in the Bid Schedule are provided below:

Item No.	Description	Pay Unit
60.61SLM36S	FURNISHING, DELIVERING AND INSTALLING 36-INCH STRAIGHT STEEL WATER MAIN PIPE BY SLIP-LINING METHOD	L.F.
60.61SLM48S	FURNISHING, DELIVERING AND INSTALLING 48-INCH STRAIGHT STEEL WATER MAIN PIPE BY SLIP-LINING METHOD	L.F.

(6) **Refer** to **Subsection 71.41.4 - Specific Pavement Restoration Provisions**, Page VII-67: **Add** the following to **Subsection 71.41.4**:

(E) Specific Pavement Restoration Provisions:

(1) In Crescent Street from approximately 44 L.F. west of the west building line of 31st Avenue to the east building line of 31st Avenue and in 31st Avenue from the north building line of Crescent Street to approximately 60 L.F. south of the south building line of Crescent Street; In 31st Avenue from approximately 46 L.F. north of the north building line of 41st Street to the south building line of 41st Street and in 41st Street from the west building line of 31st Avenue to approximately 25 L.F. east of the east building line of 31st Avenue; In 41st Street from the west building line of 28th Avenue to approximately 22 L.F. east of the east building line of 28th Avenue and in 28th Avenue from the north building line of 41st Street to the south building line of 41st Street; In 41st Street from approximately 140 L.F. west of the west building line of 25th Avenue to approximately 80 L.F. west of the west building line of 25th Avenue and in 25th Avenue from approximately the north building line of 41st St to approximately 85 L.F. south of the south building line of 41st Street, the restoration shall be as follows:

(a) The permanent restoration over the **trench width and cutbacks only** shall consist of a top course of one and one-half (1-1/2) inches of binder mixture on a base course of a minimum of four and one-half (4-1/2) inches of binder mixture, or a top course of a minimum of three (3) inches of binder mixture on a base course of a minimum of six (6) inches of high-early strength concrete, to match the existing pavement as directed by the Engineer.

(b) Finally an overlay of two (2) inches of asphaltic concrete wearing course shall be installed over the entire width of the roadway from **curb to curb** or **edge to edge** of existing roadway.

(2) In 34th Avenue from approximately 80 L.F. south of the south building line of Crescent Street to approximately 100 L.F. south of the south building line of Crescent Street. In Crescent

Street from approximately 80 L.F. east of the east building line of 34th Avenue to approximately 125 L.F. east of the east building line of 34th Avenue. In 33rd Road from approximately 76 L.F. north of the north building line of Crescent Street to approximately 96 L.F. north of the north building line of Crescent Street. In 33rd Avenue form approximately 45 L.F. north of the north building line of Crescent Street to approximately 68 L.F. north of the north building line of Crescent Street. In Crescent Street from approximately 50 L.F. east of the east building line of 33rd Avenue to approximately 72 L.F. east of the east building line of 33rd Avenue.

In Crescent Street from approximately 36 L.F. west of the west building line of Broadway to approximately 15 L.F. east of the west building line of Broadway. In Crescent Street from approximately 90 L.F. east of the east building line of Broadway to approximately 110 L.F. east of the east building line of Broadway. In Crescent Street from approximately 125 L.F. east of the east building line of 31st Drive to approximately 145L.F. east of the east building line of 31st Drive. In Crescent Street from approximately 14 L.F. west of the west building line of 31st Road to approximately 21 L.F. east of the west building line of 31st Road. In Crescent Street from approximately 14 L.F. east of the west building line of 31st Road to approximately 18 L.F. east of the east building line of 31st Road. In Crescent Street from approximately 130 L.F. east of the east building line of 31st Road to approximately 180 L.F. east of the east building line of 31st Road. In Crescent Street from approximately 44 L. F. west of the west building line of 31st Avenue to the west building line of 31st Avenue. In 31st Avenue from the south building line of Crescent Street to approximately 60 L.F. south of the south building line of Crescent Street.

In 31st Avenue from approximately 85 L.F. south of the south building line of 29th Street to approximately 105 L.F. south of the south building line of 29th Street. In 31st Avenue from approximately 38 L.F. north of the north building line of 30th Street to approximately 4 L.F. south of the north building line of 30th Street.

In 31st Avenue from approximately 93 L.F. north of the north building line of 31st Street to the north building line of 31st Street. In the northeast corner of 31st Avenue and 31st Street from approximately 40 L.F west of the east building line of 31st Avenue to approximately 20 L.F. west of the east building line of 31st Avenue. In 31st Avenue from approximately 10 L.F north of the north building line of 32nd Street to approximately 30 L.F north of the north building line of 32nd Street. In the northeast corner of 31st Avenue and 32nd Street from approximately 16 L.F. west of the east building line of 31st Avenue to approximately 5 L.F. west of the east building line of 31st Avenue. In 31st Avenue from the south building line of 32nd Street to approximately 42 L.F. south of the south building line of 32nd Street. In the intersection of 31st Avenue and 33rd Street from approximately 10 L.F. west of the east building line of 31st Avenue to approximately 15 L.F. east of the west building line of 31st Avenue. In 34th Street from approximately 35 L.F. east of the east building line of 31st Avenue to approximately 15 L.F. east of the east building line of 31st Avenue. In the intersection of 31st Avenue and 34th Street from approximately 17 L.F. west of the east building line of 31st Avenue to approximately 15 L.F. east of the west building line of 31st Avenue.

In 31st Avenue from approximately 17 L.F. south of the south building line of 35th Street to approximately 60 L.F. south of the south building line of 35th Street. . In 31st Avenue from approximately 105 L.F. south of the south building line of 37th Street to approximately 130 L.F. south of the south building line of 37th Street.

In 31st Avenue from approximately 6 L.F. south of the south building line of Steinway Street to approximately 49 L.F. south of the south building line of Steinway Street.

In 41st Street from approximately 49 L.F. east of the east building line of 31st Avenue to approximately 69 L.F. east of the east building line of 31st Avenue.

In 41st Street from approximately 280 L.F. east of the east building line of 31st Avenue to approximately 315 L.F. east of the east building line of 31st Avenue. In 41st Street from approximately 57 L.F. east of the east building line of Newtown Road to approximately 167 L.F. east of the east building line of Newtown Road.

In 41st Street from approximately 37 L.F. west of the west building line of 30th Avenue to approximately 57 L.F. west of the west building line of 30th Avenue. In 30th Avenue from approximately 10 L.F south of the north building line of 41st Street to approximately 10 L.F. north of the north building line of 41st Street.

In 41st Street from approximately 298 L.F. west of the west building line of 25th Avenue to approximately 340 L.F. west of the west building line of 25th Avenue, the restoration shall be as follows:

(a) The permanent restoration over the **trench width and cutbacks only** shall consist of a top course of one and one-half (1-1/2) inches of asphaltic concrete wearing course on a base course of a minimum of four and one-half (4-1/2) inches of binder mixture, or a top course of one and one-half (1-1/2) inches of asphaltic concrete wearing course on a minimum of one and one-half (1-1/2) inches of binder mixture on a base course of a minimum of six (6) inches of concrete, to match the existing pavement as directed by the Engineer.

(3) The following requirements apply:

(a) Before the top course is installed, an additional width of asphalt beyond the edge of new base course shall be saw-cut and removed from all edges of trenches to a depth to accommodate the specified top course and the entire area restored. This additional removal shall be in accordance with paragraph (b) below.

(b) Pavement excavation along with saw cutting of pavements for sewer and water main trenches shall be in accordance with **Section 71.21 - Pavement Excavation** of the Standard Sewer And Water Main Specifications.

(c) At locations requiring the installation of a concrete base course, a reflective cracking membrane shall be installed over joints prior to restoration, the cost of which shall be deemed included in the prices bid for all pavement restoration items. Additionally, appropriate pavement keys as described below shall be used.

(d) Pavement keys **Type B-1** shall be used to insure a desired four (4) inch curb reveal (two and one-half (2-1/2) inch absolute minimum). Pavement key **Type A** shall be used in all intersections. Both keys are to be per Bureau of Highways Operations Specifications and Standard Details of Construction.

(e) Unless otherwise specified, the cost for Proctor analyses, in-place soil density tests, tack coating, eradication of temporary roadway markings, stripping or milling of pavement keys and adjustment of city-owned castings for all roadway work shall be deemed included in the prices bid for all pavement restoration items.

(f) Payment for placement of temporary pavement marking shall be made under Item No. 6.49 - TEMPORARY PAVEMENT MARKINGS (4" WIDE).

(g) Payment for removal of existing pavement markings shall be made under Item No. 6.53 - REMOVE EXISTING LANE MARKINGS (4"WIDE).

(h) Payment for placement of permanent pavement marking with thermoplastic reflectorized pavement markings (crosswalk and lane dividers) shall be made under Item No. 6.44 - THERMOPLASTIC REFLECTORIZED PAVEMENT MARKINGS (4" WIDE).

(i) Payment for pavement restoration shall be made under the following items:

Item No.	Item	Payment Description
4.02 AB-R	Asphaltic Concrete Wearing Course, 1-1/2" Thick	(For asphaltic concrete wearing course top course when no overlay is required.)
4.02 AF-R	Asphaltic Concrete Wearing Course, 2" Thick	(For 2" asphaltic concrete wearing course overlay from curb to curb or edge to edge.)

4.02 CA	Binder Mixture	(For binder mixture base course over trenches and cutbacks; binder mixture top filler course under asphaltic concrete wearing course when no overlay is required; binder mixture top course when overlay is required; binder mixture in Type A and B Keys; and binder mixture to fill in roadway depressions and to provide a leveling course prior to overlay where ordered.)
4.04 B	Concrete Base For Pavement, Variable Thickness For Trench Restoration, Class B-32	(For concrete base course over trenches and cutbacks.)
4.04 H	Concrete Base For Pavement, Variable Thickness For Trench Restoration, (High-Early Strength)	(For concrete base course over trenches and cutbacks.)

D. AMENDMENTS TO THE SPECIFICATIONS FOR TRUNK MAIN WORK

1) **Refer** to **Part 1 – Furnishing And Delivering Steel Pipes And Appurtenances 30 Inches In Diameter And Larger, Section 11. Fabrication:**, Page 4;
Add the following to **Section 11:**

All steel water mains shall be spiral welded pipes, and all steel water main fittings shall be fabricated from qualified spiral welded pipe. Can type pipe is not acceptable.

2) **Refer** to **Part 1 – Furnishing And Delivering Steel Pipes And Appurtenances 30 Inches In Diameter And Larger, Paragraph 13. Special Fittings:**, Page 5;
Add the following to **Paragraph 13:**

The steel reducer shall have a length of seven (7) feet for every twelve (12) inches reduction in diameter.

END OF SECTION
This Section consists of twenty-two (22) pages plus seven (7) pages of attachments.

NEW YORK CITY DOT

Department of Transportation

POLLY TROTTENBERG, Commissioner

OCMC TRAFFIC STIPULATIONS

February 29, 2016

OCMC FILE NO: QEC-15-722
CONTRACT NO: QED1014
PROJECT: REHABILITATION OF EXISTIGN 60" TRUNK WATER MAIN IN CRESCENT STREET FROM 34TH AVENUE TO 31ST AVENUE, ETC.

LOCATION(S):
CRESCENT STREET BETWEEN 34TH AVENUE AND 31ST AVENUE
31ST AVENUE BETWEEN CRESCENT STREET AND 41ST STREET
41ST STREET BETWEEN 31ST AVENUE AND ASTORIA BOULEVARD SOUTH
34TH AVENUE BETWEEN 28TH STREET AND CRESCENT STREET
33RD ROAD BETWEEN CRESCENT STREET AND 23RD STREET
33RD AVENUE BETWEEN CRESCENT STREET AND 23RD STREET
31ST STREET BETWEEN 31ST AVENUE AND 30TH DRIVE
32ND STREET BETWEEN 31ST AVENUE AND 30TH AVENUE
33RD STREET BETWEEN BROADWAY AND 30th AVENUE
34TH STREET BETWEEN BROADWAY AND 30TH AVENUE
30TH AVENUE BETWEEN 41ST STREET AND NEWTOWN ROAD
28TH AVENUE BETWEEN 42ND STREET AND STEINWAY STREET
25TH AVENUE BETWEEN 42ND STREET AND STEINWAY STREET

PERMISSION IS HEREBY GRANTED TO THE **NEW YORK CITY DEPARTMENT OF DESIGN AND CONSTRUCTION (NYC DDC)** AND ITS DULY AUTHORIZED AGENT, TO ENTER UPON AND RESTRICT THE FLOW OF TRAFFIC AT THE ABOVE LOCATION(S) FOR THE PURPOSE OF CARRYING OUT THE ABOVE NOTED PROJECT, SUBJECT TO THE STIPULATIONS, AS NOTED BELOW:

I. SPECIAL STIPULATIONS

A. **EMBARGOES** – A CONSTRUCTION EMBARGO WILL APPLY TO THOSE LOCATIONS BELOW WHICH FALL WITHIN THE **HOLIDAY EMBARGO** OR ANY OTHER SPECIAL EVENT EMBARGOES PUBLISHED BY THE BUREAU OF PERMIT MANAGEMENT AND CONSTRUCTION CONTROL.

B. **BIKE LANES** – IF WORK IS IN OR AFFECTING A BIKE LANE, THE PERMITTEE MUST POST ADVANCE WARNING SIGNS 350 FEET AND 200 FEET PRIOR TO THE WORK ZONE STATING **"CONSTRUCTION IN BIKE LANE AHEAD PROCEED WITH CAUTION"**, AND ALSO POST A SIGN AT THE WORK ZONE STATING **"CONSTRUCTION IN BIKE LANE PROCEED WITH CAUTION"**. SUCH SIGNS SHALL BE ORANGE, 3' X 3', DIAMOND-SHAPED WITH 4" BLACK LETTERING. SIGNS SHALL BE POSTED IN ACCORDANCE WITH THE FEDERAL MANUAL ON UNIFORM TRAFFIC CONTROL DEVICES (MUTCD).

C. **BIKE SHARE STATIONS:** THE PERMITTEE SHALL NOT REMOVE, RELOCATE, DAMAGE OR DISRUPT THE OPERATION OF EXISTING BIKE SHARE STATIONS WITHOUT FIRST CONTACTING NYC BIKE SHARE AT 855-245-3311 FOR THEIR REQUIREMENTS PRIOR TO COMMENCING WORK.

D. **CITYBENCH:** THE PERMITTEE SHALL NOT REMOVE, RELOCATE, DAMAGE OR DISRUPT AN EXISTING CITYBENCH WITHOUT FIRST CONTACTING NYC DOT AT 212-839-6569, OR VIA EMAIL AT CITYBENCH@DOT.NYC.GOV PRIOR TO COMMENCING WORK.

E. **PROTECTION OF NYC DEP GREEN INFRASTRUCTURE:** THE PERMITTEE SHALL TAKE PRECAUTION OF NYC DEP GREEN INFRASTRUCTURE IN THE RIGHT-OF-WAY. THE PERMITTEE MUST PROTECT NYC DEP GREEN INFRASTRUCTURE DOWNSTREAM OF THE WORK OR WITHIN FIVE (5) FEET OF THE WORK AREA. THE PERMITTEE MUST EMAIL NYC DEP AT SUSTAINABILITY@DEP.NYC.GOV FOR PROTECTION REQUIREMENTS PRIOR TO COMMENCING WORK. THE PERMITTEE IS RESPONSIBLE FOR RESTORATION OF DAMAGED NYC DEP INFRASTRUCTURE AS DIRECTED BY NYC DEP.

F. **BUS STOPS** – THE PERMITTEE SHALL PROVIDE WRITTEN NOTICE TO NYC DOT OCMC AND NEW YORK CITY TRANSIT (NYCT) A MINIMUM OF FIVE (5) WEEKS IN ADVANCE FOR LANE/STREET CLOSURES THAT AFFECT BUS ROUTES/BUS STOPS.

G. **STREET LIGHTS / TRAFFIC SIGNALS:** THE PERMITTEE SHALL NOT REMOVE OR RELOCATE EXISTING STREET LIGHTS OR TRAFFIC SIGNALS WITHOUT FIRST OBTAINING APPROVAL FROM NYCDOT STREET LIGHTING / TRAFFIC SIGNALS UNIT.

H. **TRAFFIC CAMERAS, DETECTION/COMMUNICATION EQUIPMENT:** IF AT ANY TIME DURING THE APPROVED WORK, THE PERMITTEE ENCOUNTERS TRAFFIC SURVEILLANCE CAMERAS, DETECTION EQUIPMENT OR ANY TYPE OF COMMUNICATION EQUIPMENT (WIRELESS OR HARD-WIRED) ON ANY NYC DOT FACILITY, THAT IS NOT INCLUDED ON THE DESIGN/BUILD DRAWINGS, THE PERMITTEE SHALL IMMEDIATELY NOTIFY NYC DOT TRAFFIC MANAGEMENT BY PHONE AT 718-433-3390 OR 718-433-3340 AND VIA EMAIL AT TMC@DOT.NYC.GOV AND AWAIT DIRECTION PRIOR TO CONTINUING WORK.

I. **METERS** – THE PERMITTEE SHALL NOT REMOVE OR RELOCATE PARKING METERS WITHOUT FIRST OBTAINING APPROVAL FROM NYCDOT PARKING METER DIVISION AT 718-894-8651.

NYC Department of Transportation
Bureau of Permit Management and Construction Control
Water Street - 7th Floor, New York, NY 10041
T: 212.839.9637 F: 212.839.8970
www.nyc.gov/dot

I. SPECIAL STIPULATIONS (CONTINUED)

J. **TEST PITS** – THE BELOW TRAFFIC STIPULATIONS DO NOT APPLY TO TEST PIT WORK RELATED TO THIS CONTRACT. WORK HOURS AND OTHER REQUIREMENTS FOR TEST PIT OPERATIONS MAY DIFFER FROM THE STIPULATIONS IDENTIFIED BELOW. THE PERMITTEE SHALL BE REQUIRED TO OBTAIN SEPARATE PERMITS RELATED TO TEST PITS.

K. **TEMPORARY PARKING REGULATIONS/PAVEMENT MARKINGS** – THE PERMITTEE IS REQUIRED TO INSTALL, MAINTAIN AND REMOVE ALL NECESSARY TEMPORARY PARKING AND REGULATORY SIGNS AND PAVEMENT MARKINGS, AND RESTORE THEIR ORIGINAL CONDITION PER NYC DOT STANDARDS, PRIOR TO EXPIRATION OF THEIR PERMITS. THE PERMITTEE OR AGENCY PERFORMING PUBLIC OUTREACH SHALL POST AND MAINTAIN ADVISORY SIGNS A MINIMUM OF 48 HOURS PRIOR TO CHANGING EXISTING PARKING REGULATION SIGNS TO APPROVED TEMPORARY CONSTRUCTION PARKING REGULATION SIGNS. THE ADVISORY SIGNS SHOULD BE POSTED ON ALL POLES AND DRIVE RAILS ON THE SEGMENT AFFECTED, INDICATING THE DATE OF THE CHANGE, THE NEW REGULATIONS AND A TELEPHONE NUMBER TO OBTAIN MORE INFORMATION.

L. **ACCESS TO ABUTTING PROPERTIES** – THE PERMITTEE SHALL COORDINATE ALL ACTIVITIES WITH ABUTTING PROPERTY OWNERS TO ENSURE ACCESS IS PROVIDED TO/FROM ENTRANCES/DRIVEWAYS AT ALL TIMES.

M. **AUTHORIZED PARKING** – PRIOR TO PERFORMING WORK WHICH IMPACTS AUTHORIZED PARKING, THE PERMITTEE SHALL SUBMIT IN WRITING, AND COPY OCMC-STREETS, A REQUEST TO OCCUPY SPACE CURRENTLY USED BY AUTHORIZED VEHICLES. APPROVAL MUST BE RECEIVED FROM AUTHORIZED PARKING PRIOR TO OCCUPYING THESE AREAS.

N. **NOTIFICATION** – THE PERMITTEE MUST AT LEAST TWO (2) WORKING DAYS BEFORE THE START OF CONSTRUCTION NOTIFY THE NYC FIRE DEPARTMENT, NYC POLICE DEPARTMENT, NYCEMS, LOCAL COMMUNITY BOARD, BOROUGH PRESIDENT'S OFFICE-CHIEF ENGINEER, NYCDOT OCMC OFFICE, AND ALL ABUTTING PROPERTY OWNERS.

O. **CONSTRUCTION INFORMATIONAL SIGNS** – THIS PROJECT REQUIRES A CONSTRUCTION PROJECT INFORMATIONAL SIGN (CPIS) IN ACCORDANCE WITH NYCDOT HIGHWAY RULE SECTION 2-02 (4) AND (5). CRITERIA AND A PROTOTYPE FOR THIS SIGN MAY BE FOUND ON THE NYCDOT WEBSITE AT:

HTTP://WWW.NYC.GOV/HTML/DOT/DOWNLOADS/PDF/DOT_CPIS_DIRECTIONS.PDF

P. **ENHANCED MITIGATIONS**

- **ENHANCED MITIGATIONS FOR PEDESTRIAN FLOW**, INCLUDING METAL FENCING, SHALL BE PROVIDED TO ENSURE PEDESTRIANS STAY WITHIN THEIR DESIGNATED PATH/ROUTE.
- **"NO STANDING ANYTIME-TEMPORARY CONSTRUCTION" SIGNS** AND TEMPORARY PAVEMENT MARKINGS SHALL BE INSTALLED AND MAINTAINED AS WARRANTED BY THE MAINTENANCE AND PROTECTION OF TRAFFIC (MPT) REQUIRED TO FACILITATE TRAFFIC MOVEMENTS THROUGH THE WORK ZONE. ALL TEMPORARY SIGNS AND PAVEMENT MARKINGS SHALL BE REMOVED UPON COMPLETION OF THE PROJECT.
- **COMMUNITY OUTREACH** SHALL BE PROVIDED FOR THE DURATION OF THE PROJECT.

II. MAINTENANCE AND PROTECTION OF TRAFFIC

A. CRESCENT STREET BETWEEN 34TH AVENUE AND 33RD ROAD

1. Work hours shall be as follows: 7:00AM to 6:00PM, Monday to Friday
   9:00AM to 7:00PM, Saturday
   10:00AM to 7:00PM, Sunday
2. The Permittee shall maintain a minimum of two (2) 11-foot lanes for traffic at all times.
3. The Permittee shall maintain a minimum 5-foot clear path on the sidewalk for pedestrian access at all times.

B. CRESCENT STREET BETWEEN 33RD ROAD AND 31ST AVENUE

1. Work hours shall be as follows: 7:00AM to 6:00PM, Monday to Friday
   9:00AM to 7:00PM, Saturday
   10:00AM to 7:00PM, Sunday
2. During working hours, the Permittee shall maintain a minimum of one (1) 11-foot lane for traffic. After working hours, the Permittee shall restore all travel lanes to traffic.
3. The Permittee shall maintain a minimum 5-foot clear path on the sidewalk for pedestrian access at all times.

C. INTERSECTION OF CRESCENT STREET AND BROADWAY

1. Work hours shall be as follows: 9:00AM to 4:00PM, Monday to Friday
   9:00AM to 7:00PM, Saturday
   10:00AM to 7:00PM, Sunday
2. The Permittee shall maintain a minimum of two (2) 11-foot lanes for traffic (one (1) 11-foot lane for traffic in each direction) on Broadway, and one (1) 11-foot lane for traffic on Crescent Street at all times.
3. The Permittee may close the east-west pedestrian crosswalk on the south side of the intersection provide all other pedestrian crosswalks remain open and available to pedestrians.

II. MAINTENANCE AND PROTECTION OF TRAFFIC (CONTINUED)

D. INTERSECTION OF CRESCENT STREET AND 31ST ROAD

1. Work hours shall be as follows: 7:00AM to 6:00PM, Monday to Friday
   9:00AM to 7:00PM, Saturday
   10:00AM to 7:00PM, Sunday
2. During work hours, the Permittee shall maintain a minimum of one (1) 11-foot lane for traffic on Crescent Street, and one (1) 11-foot lane for traffic on 31st Road. After work hours, the Permittee shall restore the full width of the intersection to traffic.

E. INTERSECTION OF CRESCENT STREET AND 31ST AVENUE

1. Work hours shall be as follows: 9:00AM to 4:00PM, Monday to Friday
   9:00AM to 7:00PM, Saturday
   10:00AM to 7:00PM, Sunday
2. During work hours, the Permittee shall maintain a minimum of two (2) 11-foot lanes for traffic (one (1) 11-foot lane for traffic in each direction) on 31st Avenue, and one (1) 11-foot lane for traffic on Crescent Street.
3. After work hours, the Permittee shall maintain a minimum of two (2) 11-foot lanes for traffic (one (1) 11-foot lane for traffic in each direction) on 31st Avenue, and two (2) 11-foot lanes for traffic on Crescent Street.
4. The Permittee may fully close one (1) pedestrian crosswalk at a time, provide all other pedestrian crosswalks are open and available to pedestrians.

F. 31ST AVENUE BETWEEN CRESCENT STREET AND 32ND STREET

1. Work hours shall be as follows: 7:00AM to 6:00PM, Monday to Friday
   9:00AM to 7:00PM, Saturday
   10:00AM to 7:00PM, Sunday
2. The Permittee shall maintain a minimum of two (2) 11-foot lanes for traffic (one (1) 11-foot lane for traffic in each direction) at all times.
3. The Permittee shall maintain a minimum 5-foot clear path on the sidewalk for pedestrian access at all times.

G. 31ST AVENUE BETWEEN 32ND STREET AND 41ST STREET

1. Work hours shall be as follows: 9:00AM to 4:00PM, Monday to Friday
   9:00AM to 7:00PM, Saturday
   10:00AM to 7:00PM, Sunday
2. During work hours, the Permittee shall maintain a minimum of one (1) 13-foot lane for two-way traffic via the use of flaggers at each end of the work zone. After work hours, the Permittee shall maintain a minimum of two (2) 11-foot lanes for traffic (one (1) 11-foot lane for traffic in each direction).
3. The Permittee shall maintain a minimum 5-foot clear path on the sidewalk for pedestrian access at all times.

H. INTERSECTION OF 31ST AVENUE AND 31ST STREET

1. Work hours shall be as follows: 9:00AM to 4:00PM, Monday to Friday
   8:00AM to 6:00PM, Saturday
   9:00AM to 6:00PM, Sunday
2. During work hours, the Permittee shall maintain a minimum of two (2) 11-foot lanes for traffic (one (1) 11-foot lane for traffic in each direction) on both 31st Avenue and 31st Street.
3. After work hours, the Permittee shall restore the full width of the intersection to traffic.
4. The Permittee may fully close one (1) pedestrian crosswalk at a time, provide all other pedestrian crosswalks are open and available to pedestrians.

II. MAINTENANCE AND PROTECTION OF TRAFFIC (CONTINUED)

I. INTERSECTION OF 31ST AVENUE AND 32ND STREET

1. Work hours shall be as follows: 9:00AM to 4:00PM, Monday to Friday
   9:00AM to 7:00PM, Saturday
   10:00AM to 7:00PM, Sunday
2. During work hours, the Permittee shall maintain a minimum of two (2) 11-foot lanes for traffic (one (1) 11-foot lane for traffic in each direction) on 31st Avenue on the west side of the intersection, one (1) 13-foot lane for two-way traffic on 31st Avenue on the east side of the intersection. The Permittee shall maintain a minimum of one (1) 11-foot lane for traffic on 32nd Street.
3. After work hours, the Permittee shall restore the full width of the intersection to traffic.
4. The Permittee may fully close one (1) pedestrian crosswalk at a time, provide all other pedestrian crosswalks are open and available to pedestrians.

J. INTERSECTION OF 31ST AVENUE AND 33RD STREET

1. Work hours shall be as follows: 9:00AM to 4:00PM, Monday to Friday
   9:00AM to 7:00PM, Saturday
   10:00AM to 7:00PM, Sunday
2. During work hours, the Permittee shall maintain a minimum of one (1) 13-foot lane for two-way traffic on 31st Avenue, and one (1) 11-foot lane for traffic on 33rd Street.
3. After work hours, the Permittee shall restore the full width of the intersection to traffic.
4. The Permittee may fully close one (1) pedestrian crosswalk at a time, provide all other pedestrian crosswalks are open and available to pedestrians.

K. INTERSECTION OF 31ST AVENUE AND 34TH STREET

1. Work hours shall be as follows: 9:00AM to 4:00PM, Monday to Friday
   9:00AM to 7:00PM, Saturday
   10:00AM to 7:00PM, Sunday
2. During work hours, the Permittee shall maintain a minimum of one (1) 13-foot lane for two-way traffic on 31st Avenue, and one (1) 11-foot lane for traffic on 34th Street.
3. After work hours, the Permittee shall restore the full width of the intersection to traffic.
4. The Permittee may fully close one (1) pedestrian crosswalk at a time, provide all other pedestrian crosswalks are open and available to pedestrians.

L. INTERSECTION OF 31ST AVENUE AND 41ST STREET

1. Work hours shall be as follows: 9:00AM to 4:00PM, Monday to Friday
   9:00AM to 7:00PM, Saturday
   10:00AM to 7:00PM, Sunday
2. During work hours, the Permittee shall maintain a minimum of one (1) 13-foot lane for two-way traffic on 31st Avenue, and one (1) 12-foot lane for local and emergency traffic on 41st Street.
3. After work hours, the Permittee shall restore the full width of the intersection to traffic.
4. The Permittee may fully close one (1) pedestrian crosswalk at a time, provide all other pedestrian crosswalks are open and available to pedestrians.

M. 41ST STREET BETWEEN 31ST AVENUE AND ASTORIA BOULEVARD SOUTH

1. Work hours shall be as follows: 7:00AM to 6:00PM, Monday to Friday
   9:00AM to 7:00PM, Saturday
   10:00AM to 7:00PM, Sunday
2. During work hours, the Permittee shall maintain a minimum of one (1) 12-foot lane for local and emergency traffic. After work hours, the Permittee shall maintain a minimum of one (1) 11-foot lane for traffic.
3. The Permittee shall maintain a minimum 5-foot clear path on the sidewalk for pedestrian access at all times.

II. MAINTENANCE AND PROTECTION OF TRAFFIC (CONTINUED)

N. INTERSECTION OF 41ST STREET AND 28TH AVENUE

1. Work hours shall be as follows: 9:00AM to 4:00PM, Monday to Friday
   9:00AM to 7:00PM, Saturday
   10:00AM to 7:00PM, Sunday
2. During work hours, the Permittee shall maintain a minimum of one (1) 11-foot lane for traffic on 41st Street, and two (2) 11-foot lanes for traffic on 28th Avenue.
3. After work hours, the Permittee shall restore the full width of the intersection to traffic.
4. The Permittee may fully close one (1) pedestrian crosswalk at a time, provide all other pedestrian crosswalks are open and available to pedestrians.

O. INTERSECTION OF 41ST STREET AND 25TH AVENUE

1. Work hours shall be as follows: 9:00AM to 4:00PM, Monday to Friday
   9:00AM to 7:00PM, Saturday
   10:00AM to 7:00PM, Sunday
2. During work hours, the Permittee shall maintain a minimum of one (1) 11-foot lane for traffic on 41st Street, and one (1) 12-foot lane for two-way traffic via the use of flaggers at each end of the work zone on 25th Avenue.
3. After work hours, the Permittee shall maintain a minimum of one (1) 11-foot lane for traffic on 41st Street and two (2) 11-foot lanes for traffic (one (1) 11-foot lane for traffic in each direction) on 25th Avenue.
4. The Permittee may fully close one (1) pedestrian crosswalk at a time, provide all other pedestrian crosswalks are open and available to pedestrians.

P. 34TH AVENUE BETWEEN CRESCENT STREET AND 28TH STREET

1. Work hours shall be as follows: 9:00AM to 4:00PM, Monday to Friday
   8:00AM to 6:00PM, Saturday
   9:00AM to 6:00PM, Sunday
2. During work hours, the Permittee shall maintain a minimum of two (2) 11-foot lanes for traffic (one (1) 11-foot lane for traffic in each direction) plus shared bike lanes. After work hours, the Permittee shall restore the full width of the roadway to traffic.
3. The Permittee shall maintain a minimum 5-foot clear path on the sidewalk for pedestrian access at all times.

Q. 33RD ROAD BETWEEN CRESCENT STREET AND 23RD STREET
R. 33RD STREET BETWEEN BROADWAY AND 30TH AVENUE
S. 34TH STREET BETWEEN BROADWAY AND 30TH AVENUE

1. Work hours shall be as follows: 7:00AM to 6:00PM, Monday to Friday
   9:00AM to 7:00PM, Saturday
   10:00AM to 7:00PM, Sunday
2. The Permittee shall maintain a minimum of one (1) 11-foot lane for traffic at all times.
3. The Permittee shall maintain a minimum 5-foot clear path on the sidewalk for pedestrian access at all times.

T. 33RD AVENUE BETWEEN CRESCENT STREET AND 23RD STREET

1. Work hours shall be as follows: 7:00AM to 6:00PM, Monday to Friday
   9:00AM to 7:00PM, Saturday
   10:00AM to 7:00PM, Sunday
2. During work hours, the Permittee shall maintain a minimum of one (1) 12-foot lane for local and emergency traffic. After work hours, the Permittee shall maintain a minimum of one (1) 11-foot lane for traffic.
3. The Permittee shall maintain a minimum 5-foot clear path on the sidewalk for pedestrian access at all times.

II. MAINTENANCE AND PROTECTION OF TRAFFIC (CONTINUED)

U. 31ST STREET BETWEEN 31ST AVENUE AND 30TH DRIVE
V. 30TH AVENUE BETWEEN 41ST STREET AND NEWTOWN ROAD
W. 28TH AVENUE BETWEEN 42ND STREET AND STEINWAY STREET

1. Work hours shall be as follows: 9:00AM to 4:00PM, Monday to Friday
   8:00AM to 6:00PM, Saturday
   9:00AM to 6:00PM, Sunday
2. During work hours, the Permittee shall maintain a minimum of two (2) 11-foot lanes for traffic (one (1) 11-foot lane for traffic in each direction). After work hours, the Permittee shall restore the full width of the roadway to traffic.
3. The Permittee shall maintain a minimum 5-foot clear path on the sidewalk for pedestrian access at all times.

X. 25TH AVENUE BETWEEN 42ND STREET AND 41ST STREET

1. Work hours shall be as follows: 9:00AM to 4:00PM, Monday to Friday
   8:00AM to 6:00PM, Saturday
   9:00AM to 6:00PM, Sunday
2. During work hours, the Permittee shall maintain a minimum of one (1) 12-foot lane for two-way traffic via the use of flaggers at each end of the work zone. After work hours, the Permittee shall maintain a minimum of two (2) 11-foot lanes for traffic (one (1) 11-foot lane in each direction).
3. The Permittee shall maintain a minimum 5-foot clear path on the sidewalk for pedestrian access at all times.

Y. 25TH AVENUE BETWEEN 41ST STREET AND STEINWAY STREET

1. Work hours shall be as follows: 9:00AM to 4:00PM, Monday to Friday
   8:00AM to 6:00PM, Saturday
   9:00AM to 6:00PM, Sunday
2. During work hours, the Permittee shall maintain a minimum of two (2) 11-foot lanes for traffic (one (1) 11-foot lane in each direction). After work hours, the Permittee shall restore the full width of the roadway to traffic.
3. The Permittee shall maintain a minimum 5-foot clear path on the sidewalk for pedestrian access at all times.

III. GENERAL NOTES

A. **THIS IS NOT A PERMIT.** THIS STIPULATION SHEET MUST BE SUBMITTED WITH ALL REQUESTS FOR PERMITS PERTAINING TO THE ABOVE CONTRACT AND PRESENT AT THE WORK SITE ALONG WITH ALL ACTIVE CONSTRUCTION PERMITS WHEN THE APPROVED WORK IS BEING PERFORMED.

B. THE PERMITTEE MUST COMPLY WITH ALL CONSTRUCTION EMBARGOS ISSUED BY THE NYCDOT INCLUDING THE HOLIDAY EMBARGO.

C. THE PERMITTEE SHALL COMPLY WITH ALL REQUIREMENTS OF THE NYCDOT SPECIAL EVENTS UNIT AS IDENTIFIED BELOW:

1. STREET FAIRS / FESTIVALS

- ALL EXCAVATIONS MUST BE PLATED WITH SKID RESISTANT PLATES.
- PLATES MUST BE RECESSED AND FLUSH WITH PAVEMENT.
- ALL PAVEMENT DEFECTS MUST BE CORRECTED WITHIN OR ADJACENT TO THE WORK ZONE.
- THE CONTRACTOR IS RESPONSIBLE FOR ANY DEFECTS WITHIN THE IMMEDIATE VICINITY IF NYCDOT STREET & ARTERIAL MAINTENANCE CANNOT MAKE REPAIRS DUE TO PROJECT INTERFERENCE (AS DETERMINED BY NYCDOT).
- ALL EQUIPMENT, TRAILERS AND MATERIAL STORAGE MUST BE REMOVED.

2. RUNNING / WALKING / BIKING EVENTS

- ALL EXCAVATIONS MUST BE BACKFILLED AND PAVED OR PLATES MUST BE RECESSED AND PAVED OVER FLUSH WITH PAVEMENT.
- ALL PAVEMENT DEFECTS MUST BE CORRECTED WITHIN OR ADJACENT TO THE WORK ZONE.
- THE CONTRACTOR IS RESPONSIBLE FOR ANY DEFECTS WITHIN THE IMMEDIATE VICINITY IF NYCDOT STREET & ARTERIAL MAINTENANCE CANNOT MAKE REPAIRS DUE TO PROJECT INTERFERENCE (AS DETERMINED BY NYCDOT).
- ALL EQUIPMENT, TRAILERS AND MATERIAL STORAGE MUST BE REMOVED.

III. GENERAL NOTES (CONTINUED)

3. PARADES

- ALL EXCAVATIONS MUST BE BACKFILLED AND PAVED OR PLATES MUST BE RECESSED AND PAVED OVER FLUSH WITH PAVEMENT.
- FORMATION AND DISPERSAL AREA PLATES MUST BE RECESSED AND FLUSH WITH PAVEMENT (PLATES MUST BE SKID RESISTANT).
- ALL PAVEMENT DEFECTS MUST BE CORRECTED WITHIN OR ADJACENT TO THE WORK ZONE.
- THE CONTRACTOR IS RESPONSIBLE FOR ANY DEFECTS WITHIN THE IMMEDIATE VICINITY IF NYCDOT STREET & ARTERIAL MAINTENANCE CANNOT MAKE REPAIRS DUE TO PROJECT INTERFERENCE (AS DETERMINED BY NYCDOT).
- ALL EQUIPMENT, TRAILERS AND MATERIAL STORAGE MUST BE REMOVED.

4. MAYORAL EVENTS

- ALL EXCAVATIONS MUST BE BACKFILLED AND PAVED OR PLATES MUST BE RECESSED AND PAVED OVER FLUSH WITH PAVEMENT.
- ALL PAVEMENT DEFECTS MUST BE CORRECTED WITHIN OR ADJACENT TO THE WORK ZONE.
- THE CONTRACTOR IS RESPONSIBLE FOR ANY DEFECTS WITHIN THE IMMEDIATE VICINITY IF NYCDOT STREET & ARTERIAL MAINTENANCE CANNOT MAKE REPAIRS DUE TO PROJECT INTERFERENCE (AS DETERMINED BY NYCDOT).
- ALL EQUIPMENT, TRAILERS AND MATERIAL STORAGE MUST BE REMOVED.

D. ALL RELOCATION WORK BY THE UTILITIES SUCH AS; CON EDISON, TELEPHONE, GAS AND CABLE COMPANIES SHALL PRECEDE THE PERMITTEE'S START OF WORK ON ALL AFFECTED ROADWAYS IN THE IMPACTED CONTRACT AREA.

E. THE PERMITTEE IS ADVISED THAT OTHER CONTRACTORS MAY BE WORKING IN THE GENERAL AREA DURING THE TERM OF THIS STIPULATION. IN WHICH EVENT, THE PERMITTEE MAY REQUIRE MODIFICATIONS BY THE OCMC-STREETS.

F. THE PERMITTEE IS NOT AUTHORIZED TO ENTER, OCCUPY OR USE ANY PUBLICLY-OWNED OR PRIVATELY OWNED, NON-PAVED, LANDSCAPE OR NON-LANDSCAPED LOCATION WITHOUT SPECIFIC WRITTEN PERMISSION. WHEN THE LOCATION IS WITHIN THE RIGHT-OF-WAY OF A LIMITED-ACCESS ARTERIAL HIGHWAY, **WRITTEN** APPROVAL FROM THE NYCDOT OCMC-HIGHWAYS IS REQUIRED. WHEN THE LOCATION IS WITHIN THE RIGHT-OF-WAY OF A PUBLIC STREET OR PUBLIC PARK, **WRITTEN** APPROVAL FROM THE NEW YORK CITY DEPARTMENT OF TRANSPORTATION OR NEW YORK CITY DEPARTMENT OF PARKS AND RECREATION IS REQUIRED. WHEN THE LOCATION IS WITHIN THE RIGHT-OF-WAY OF ANY OTHER JURISDICTION SUCH AS PRIVATE PROPERTY, STATE, FEDERAL ETC., IT IS THE PERMITTEE'S RESPONSIBILITY TO DETERMINE THE PROPERTY OWNER AND OBTAIN THE WRITTEN APPROVAL.

G. THE PERMITTEE SHALL ADHERE TO THE NYCDOT BUREAU OF BRIDGES' SPECIAL PROVISIONS FOR LANDSCAPE PROTECTION, MAINTENANCE AND RESTORATION, ITEMS 1.18.15 THROUGH 1.18.19, WHENEVER AND WHEREVER ANY OF THE PERMITTEE'S ACTIVITIES OCCUR WITHIN A LIMITED ACCESS ARTERIAL HIGHWAY RIGHT - OF - WAY.

H. NO DEVIATION OR DEPARTURE FROM THESE STIPULATIONS WILL BE PERMITTED WITHOUT THE PRIOR WRITTEN APPROVAL FROM THE OCMC-STREETS. REQUEST FOR SUCH MODIFICATIONS SHALL BE SUBMITTED TO THE OFFICE OF THE OCMC-STREETS, NEW YORK CITY DEPARTMENT OF TRANSPORTATION, A MINIMUM OF TWENTY (20) DAYS IN ADVANCE FOR CONSIDERATION.

I. FOR ANY CONSTRUCTION ACTIVITY RESULTING IN THE FULL CLOSURE OF A ROADWAY FOR MORE THAN 180 CONSECUTIVE CALENDAR DAYS, THE CONTRACTOR MUST PRODUCE AND SUBMIT A COMMUNITY REASSESSMENT, IMPACT AND AMELIORATION (CRIA) STATEMENT TO NYCDOT PLANNING AND OBTAIN THEIR APPROVAL BEFORE APPLYING FOR PERMITS, IN COMPLIANCE WITH THE PROVISIONS OF **LOCAL LAW 24 STREET CLOSURE LAW.**

J. FOR THIS PROJECT THE PERMITTEE SHALL FURNISH, INSTALL AND MAINTAIN ALL NECESSARY ADVANCE WARNING AND DETOUR SIGNS, TEMPORARY CONTROL DEVICES, BARRICADES, LIGHTS AND FLASHING ARROW BOARDS IN ACCORDANCE WITH THE "MANUAL ON UNIFORM TRAFFIC CONTROL DEVICES," THE TYPICAL SCHEMES INCLUDED IN THIS SPECIFICATION; AND AS ORDERED BY THE ENGINEER-IN-CHARGE AND THE OCMC-STREETS.

K. THE PERMITTEE SHALL BE RESPONSIBLE FOR IDENTIFYING HIS CONSTRUCTION SIGNAGE. THE IDENTIFICATION SHALL INCLUDE THE PERMITTEE'S NAME, SPONSORING AGENCY NAME AND THE CONTRACT NUMBER. THE IDENTIFICATION SHALL BE PLACED ON THE BACK OF THE SIGN. THE LETTERING SHALL BE THREE (3) INCHES HIGH.

L. THE OCMC-STREETS RESERVES THE RIGHT TO VOID OR MODIFY THESE STIPULATIONS SHOULD CONSTRUCTION FAIL TO COMMENCE WITHIN TWO (2) YEARS OF THE SIGNED DATE OF THESE STIPULATIONS.

NICOLAS DAGHER, P.E.
EXECUTIVE DIRECTOR
OCMC

for **MAZHAR JAMIL**
PROJECT MANAGER
OCMC-STREETS

EP7 - PAGES

GAS COST SHARING (EP-7) STANDARD SPECIFICATIONS

NOTICE

THE PAGES CONTAINED IN THIS SECTION (EP7-PAGES) REPRESENT THE GAS COST SHARING WORK THAT SHALL APPLY TO AND BECOME A PART OF THE CONTRACT.

(NO TEXT ON THIS PAGE)

TABLE OF CONTENT

V - PRELIMINARY GAS WORK TO BE PERFORMED BY FACILITY OPERATOR

VI - LISTING OF APPROXIMATE LOCATIONS OF EP-7 BID ITEMS QUANTITIES

I - NOTICE TO ALL BIDDERS; GAS COST SHARING WORK

All prospective bidders are hereby advised that, pursuant to the "Gas Facility Cost Allocation Act", ("the Act"), the City of New York has entered into an agreement ("the Agreement") with the gas companies (Con Edison or National Grid (formerly KeySpan Energy Delivery)) operating in their respective areas of the City to "share" the cost of facility relocation and/or support and protection of facilities disturbed by proposed water and/or sewer and related City work specified in this contract. Therefore, bid items, specifications and estimated quantities for the incremental costs of support and protection of certain gas facilities have been included in this contract. The low bid for this contract shall be determined by examining each bid for all work to be performed under this contract including any work of support and protection of gas facilities to be performed. The Contractor shall not seek additional compensation from gas companies except as specifically set forth in its contract.

II - GENERAL PROVISIONS; GAS COST SHARING WORK

1. General:

The Contractor shall perform City work with interferences from existing live and abandoned gas facilities. This shall be defined as utility work. Therefore, this contract includes bid items, specifications and estimated quantities designed to fully compensate him/her for the incremental costs of supporting, protecting, providing accommodations and, avoiding disturbing gas facilities located in the streets shown on the contract drawings. In the event that any other provisions of this contract related to gas facilities (or private utilities) conflict with these provisions, these provisions shall supersede and govern all work related to gas facilities owned by the companies operating in the project area. All utility work, as defined in these specifications, including changes and additions thereto shall be paid solely by the City except when specified otherwise in this contract. Contractor hereby agrees that the facility operator shall not be liable to pay him/her for any work performed including extra utility work. Contractor agrees that its bid prices include all compensation for loss of productivity and efficiency, idle time, delays (including any delays occasioned by negotiation of a contract change), change in operations, mobilization, demobilization, remobilization, added cost or expense, lost of profit, other damages or impact costs that may be suffered by or because of utility work, or the presence of gas facilities in the proximity of City work and that it will not seek additional compensation for these items. All disputes shall be resolved as specified in the contract.

Pursuant to the Act, Agreement, and the New York City Administrative Code, the gas company(ies) has been directed by the Commissioner and is required to perform all maintenance, repairs, replacement, shifting, alteration, relocation, and/or removal work that are not part of this contract. By having bid on this contract, the Contractor understands and agrees that the Commissioner has preasserted any right the City has to require, including the issuance of any directives or so called "order outs" under the New York City Administrative Code, any or all gas companies to maintain, repair, replace, protect, support, shift, alter, relocate, and/or remove all gas facilities that are about to be disturbed by the City contract work. The issuance of additional such directives during the performance of the contract work, where necessary in the sole judgment of the Commissioner, shall be initiated by such Commissioner as set forth in the relevant sections of the Act and Agreement. Contractor further agrees to insert such requirements as set forth herein above into any contracts with its approved subcontractors so that its subcontractors also understand and agree to such contract requirements.

2. Gas Interferences And Accommodations:

During the performance of sewer and water main work funded by the New York City Department of Environmental Protection (NYCDEP), as instructed by the Engineer, the use of any applicable contract bid item is allowed in order to resolve and accommodate all gas facilities interferences with such City work, including the removal of contaminated soil in associated trench excavation. This is in addition to the specified EP-7 bid items in the contract. Payment for such accommodation shall be funded by EP-7 bid item "UTL-GCS-2WS - GAS INTERFERENCES AND ACCOMMODATIONS" (F.S. Fixed Sum). The value of such accommodation shall be computed by multiplying the appropriate unit prices bid to the quantity of work performed, as determined by the Engineer, and applying the total amount thus to be paid

to EP-7 bid item "UTL-GCS-2WS - GAS INTERFERENCES AND ACCOMMODATIONS". When EP-7 bid item "UTL-GCS-2WS - GAS INTERFERENCES AND ACCOMMODATIONS" does not exist, such additional accommodation work shall be at no cost to the City but shall be a matter of adjustment between gas facility operator and Contractor. Private facilities, other than gas, that become in interference due to gas interferences accommodations shall also be accommodated, if so directed by the Resident Engineer, at no additional cost to the City and, provided that its owner agrees to be responsible for all additional costs to Contractor, otherwise, such facility shall be ordered by the City to be maintained, shifted, relocated or replaced by its owner at his/her expenses.

2a. Water Main Accommodations:

When water main construction is to be performed in this contract, Contractor shall be required, if warranted by field conditions, and at locations designated by the Resident or Borough Engineer, to change the vertical or horizontal alignment of water mains including but not limited to all additional labor, material, work method accommodations, furnishing, delivering and laying offset fittings and pipes, etc., necessary in order to complete water main installation and, avoid gas interferences in the project area, including street intersections. Typical work method accommodations shall include, but not be limited to, pier and plate, installation of filter fabric and select fill, etc. Such work shall be performed as directed by the Engineer and in accordance with contract specifications and latest edition of water mains standards and specifications.

2b.Sewer Accommodations:

When sewer construction is to be performed in this contract, Contractor shall be required, if warranted by field conditions, and at locations designated by the Resident or Borough Engineer, to change the horizontal alignment of sewer facilities (if possible) including but not limited to all additional labor, material, work method accommodations, furnishing, delivering and construction of additional manholes or modification of manholes/catch basins, extending chute connections, house connections, using alternate materials and methods, poured-in-place structures, etc., necessary in order to complete sewer installation and, avoid gas interferences in the project area, including street intersections. The term sewer facility shall include, but not be limited to, all sewer pipe and appurtenances, manholes, catch basins, catch basin chutes, etc. Such work shall be performed as directed by the Engineer and in accordance with contract specifications and latest edition of sewer standards and specifications.

3. Quantity Overruns, EP-7 Funded Bid Items:

No quantity overrun, in excess of one hundred twenty five (125) percent, shall be permitted for EP-7 funded bid items (gas) included in this contract, except when Resident Engineer determines that such overruns are caused by field modifications to planned City work, or approved construction methods, or contract scope changes. Overruns not paid by City shall be negotiated and paid to Contractor by gas facility operator who then shall be entitled to reimbursement by NYCDEP under established cost sharing procedures.

4. Changes And Extra Work:

This section is not applicable to work defined under "Emergency Reconstruction Contracts" or so-called "Where and When Contracts" since these projects, by definition, inherently encounter unanticipated gas facilities and cannot be pre-engineered. In all other cases, any contract changes proposed for City work shall also cover and include all associated changes to support and protection of gas facilities affected by such changes to City work. In all other cases where the Contractor finds that City work cannot be performed as planned and specified and/or, as approved because of a need to support, protect and/or alleviate interferences from gas facilities that were not listed and/or shown, or incorrectly shown in contract plans and specifications, he shall immediately notify the Resident Engineer and the facility operators' representative of his findings. Resident Engineer shall promptly examine such claims and determine whether or not such work is covered by contract bid items and /or specifications (contract bid items and specifications shall include city contract items as well as EP-7 items). The Resident Engineer shall also

examine the claim to determine if the application of EP-7 bid item "UTL-GCS-2WS - GAS INTERFERENCES AND ACCOMMODATIONS" is appropriate to resolve the claim. If upon examination, the Engineer determines that such field conditions were unanticipated (not shown and/or listed, or incorrectly shown in contract documents) and are not covered by bid items and contract specifications, he shall then direct the Contractor and the affected facility operator to negotiate the cost of supporting and protecting, and/or alleviating the impact on City work caused by such unanticipated gas facilities with each other with the understanding that the performance of City work shall continue during negotiations. If a cost agreement is reached, the Contractor and facility operator shall adjust such costs between themselves at no additional costs to the City contract. If the Contractor and affected facility operator do not reach an agreement concerning the price to be paid for the extra work within five (5) business days of the Engineer's directive to engage into such negotiations and, after considering: public safety and inconvenience, requirements of laws and regulations applicable to private utilities, integrity of all utility systems, including but not limited to sewer and water, gas, electric, telephone and, cable TV facilities, sound engineering practices, cost (long and short term) to all affected parties, and potential City work delays, then the Resident Engineer, depending on nature and severity of interferences with City work, shall either, direct the facility operator to relocate or replace its facilities at its own discretion and cost, reimbursable by NYCDEP under established gas cost sharing procedures or, direct the Contractor to perform the utility work on actual time, material and equipment costs basis pursuant to relevant contract requirements and amendments. Contract bid prices for any applicable items of work involved shall be applied, or converted to an allowance for time and material charges. Changes shall be for affected portions of utility work and, shall be processed with EP-7 funds.

5. Excavation:

All excavators shall notify the NYC/LI One Call Center at 1-800-272-4480 at least two (2) working days, not including the day of the call, but not more than ten (10) working days in advance of the start of any excavation work. The gas company(ies) will mark out its facilities within the project limits and provide Construction Inspector(s) during all excavation work in close proximity (within twelve (12) inches) to gas facilities. The Contractor shall exercise extreme caution when excavating in the vicinity of any gas facilities. Hand excavation shall be performed within twelve (12) inches of gas facilities. The Contractor prior to excavating underneath these facilities shall adequately support all gas facilities. Standard support details for gas facilities have been included in the specifications. Any damage to gas facilities shall be reported immediately to the gas company(ies). The Contractor shall be responsible for all cost associated with repairs made necessary by damages caused by his operations.

6. Backfilling And Street Restoration:

Backfilling operations and street restorations shall be in accordance with contract requirements.

7. Non-Responsive Bids:

Every gas (EP-7) bid item has a suggested "Not less than" value per unit indicated on contract bid sheet. Bids resulting in cost of less than suggested for EP-7 items are hereby prohibited and if submitted shall be considered NON-RESPONSIVE.

8. Minimum Clearances:

Clearance requirements for City work shall govern and supersede any clearance requirement of gas facility operator. Therefore, a minimum of twelve (12) inches clearance between private utilities and City water mains, sewers or related structures to be installed in this contract shall be maintained. When this clearance is not attainable, the Resident Engineer may allow a minimum of four (4) inches clearance. With less than twelve (12) inches clearance a neoprene/polyethylene shield (to be provided by facility operator) shall be installed as part of all work item specifications. However, if Resident Engineer determines that City work cannot be performed within allowable clearance and no reasonable City accommodation (no-cost change to City work) is possible, the City shall direct the facility operator to remove, relocate, shift, or alter their facility(ies) pursuant to the New York City Administrative Code.

9. Work By Facility Operator:

The facility operator may find it necessary to perform the following types of work during performance of City work: accommodating a contractor's request for gas facilities modifications (in order to facilitate City contractor's proposed construction method) or, remedial and emergency work on gas facilities proper with their own resources and materials if an approved method of construction for City work causes unanticipated disturbances to gas facilities or, replacing defective gas facilities when they are exposed by the Contractor and their actual conditions are observable by the facility operator. Also included in the above category of defective gas facilities are: the presence of environmental contaminants attributable to the gas facility in or around gas facilities. If such work is deemed required by the facility operator or if facility operator is directed by the City to address such deficiencies at any time during the course of construction, the Contractor shall modify the construction schedule at no cost to the City and allow the facility operator five (5) business days to perform such work without interferences. Additional costs to the facility operator (in cases of accommodations) or, Contractor (in cases of defective gas facilities) due to such gas work, if any, shall be the responsibility of the parties involved and not of the City. Such costs shall be a matter of adjustment between the Contractor and the facility operator.

10. Materials Furnished By Facility Operator:

It shall be the Contractor's responsibility to inspect material to be installed by him immediately upon delivery and advise the facility operator through its authorized representative, of all damaged materials. The Contractor at no additional costs to the City or the facility operator shall replace any material that is damaged or lost after the Contractor's inspection.

11. Liability And Insurance:

Notwithstanding the provisions of this contract, the existing division of liabilities to third parties shall remain the same as between the City and the company. Therefore, it is specifically agreed by the City, company and Contractor (by bidding on this contract) that for the purpose of any liabilities to third parties, that the City contractor performing work directly and physically relating to gas company facilities in this project, shall be deemed an agent of the company and not an agent of the City, the New York City Municipal Water Finance Authority, or the New York City Water Board. Contractor shall include the company as an additional insured on all insurance policies maintained to comply with the City's insurance requirements.

12. Width And Depth Of Excavation:

Contractor shall not be authorized to deliberately change trench or excavation widths and/or depth specified without Engineer's approval. Enlargement of any side of excavation up to eighteen (18) inches beyond pay limits (or inside face of sheeting) requested by the Contractor for the installation of certain types of sheeting may be granted. However, such enlargements or those greater than allowable shall not be approved when, in the sole judgment of the City, field conditions allow the water mains and sewer work to be performed within the limits specified and, the sole purpose of such enlargement request is to impact adjacent utilities (public or private) whose support and protection are part of this contract. Any approval shall be given at no additional cost to the City contract, including EP-7 funding, and all costs associated with unauthorized enlargements shall be the sole responsibility of the Contractor.

13. Depth And Crossing Angles Of Gas Facilities:

Where gas facilities are shown (or specified as) crossing proposed alignment of sewers, water mains, catch basins and chute connections or any other proposed excavations at specific angles (as measured off plans or sketches or specified in contract), it shall be understood that actual field measurements may deviate (plus or minus) forty-five (45) degrees from those shown or specified. The cover, or depth from street surface to top of facilities, shall be as shown or specified in contract documents, no deviation is to be assumed. Where gas facilities are not shown on contract documents, but their support and protection are otherwise included in this contract then, all references to facilities crossing at "various angles and depth" in the gas sections shall mean that such facilities are crossing sewer, water, catch basin and, catch basin chute, and other excavations at a ninety (90) degree angle to the proposed sheeting line or side of

excavation (for unsheeted trenches) with an allowable deviation of forty-five (45) degrees in any direction, except for catch basin chute excavation where the allowable deviation shall be sixty (60) degrees. Where the cover is not noted or specified, the bottom face of such facilities shall be assumed to be crossing catch basin chutes at a depth of three (3) foot eight (8) inches or less from the street surface. Paragraph No. 2 above shall apply in cases of distribution water main construction. Appropriate bid items and specifications are provided for cases where angle and depth are greater than stated above. This section also applies to work defined in "Emergency Reconstruction Contracts" or so-called "Where and When Contracts". These contracts are not pre-engineered and consequently have no drawings, sketches or determined locations and so, gas facilities encountered will be crossing existing and proposed sewer, water, catch basin/catch basin chutes and all appurtenances at various angles and depths.

14. Maintenance Of Traffic For Gas Work:

All work pertaining to gas bid items and specifications shall be performed within the contract maintenance of traffic plan as specified in the contract document. The bid price for the Maintenance and Protection of Traffic shall cover all work pertaining to gas items. The City shall make compensation for additional maintenance and protection of traffic items in connection with gas item of work only when such additional work is deemed reasonable and necessary by the Resident Engineer and is approved by him prior to its performance.

15. Relocated Gas And Temporary Systems Installation:

In cases where the Contractor is allowed to select the location for temporary construction such as, installation of dewatering headers, wells, well points, etc., he shall not disturb any gas facilities shown on sketches provided in this section. The only exception shall be, if the affected gas company agrees to such relocation and provided that the cost of such relocation is a matter of adjustment between the company and Contractor, and at no cost to the City.

16. Role Of Company Inspector:

In any case in which the City elects to perform some or all support and protection work with its own employees, personnel or contractors, the facility operator shall provide onsite inspectors to approve and certify such support and protection work (exclusive of City accommodations) performed by the City's own employees, personnel, and contractors. Facility operator's inspectors are not authorized to direct City contractor during the performance of contract work. They shall act through the City Resident Engineer and provide him/her required approvals and certifications, prior to preparing partial payments of EP-7 items, in a format and frequency to be prescribed by the appropriate City Head of Construction.

17. Coordination With Gas Company:

The Contractor shall be required to notify the gas company(ies), in writing, at least two (2) weeks prior to the start of final paving in order to allow companies to complete any unfinished gas work located within the area to be paved. Every effort shall be made to maintain gas service with minimum inconvenience to the public.

III - TECHNICAL SECTION

SECTION 6.01 - Trench Crossings; Support And Protection Of Gas Facilities And Services.

1. Description:

Under this section, the Contractor shall provide all labor, materials, equipment, and incidentals required to

support and/or protect the integrity of gas mains, services and appurtenances of any sizes, configurations, and operating pressures crossing trench excavations above subgrade for planned construction of sewers and water mains facilities. A gas service shall be defined as a gas pipe of three (3) inches in diameter or less branching from the main to a customer pick up point or property valve box. A gas main may be any size pipe that is part of a distribution or transmission network other than services described above. Crossings shall be defined as gas facilities spanning the width of excavation (one side to the other side). These crossings may be at various angles and depth as shown on "Gas Cost Sharing Work Standard Sketches Nos. 1 and 1A", and as specified in "General Provisions; Gas Cost Sharing Work Paragraph No. 13" and, at the locations shown or listed in contract documents. The gas company operating in the area, (facility operator), owns these facilities. The work shall be performed in accordance with contract specifications, plans, and at the directions of the Resident Engineer in consultation with the authorized representatives of the facility operator.

2. Method Of Construction:

A. Protection: In general, the gas facilities shall be protected as required by New York State Industrial Code 753. In particular, the Contractor shall use hand excavation methods (pick and shovel or hand held power tools) directly below the pavement base to expose the gas facilities (marked out by facility operators) and to ascertain the clearances and cover of the facilities with respect to the proposed excavation. Upon exposing the affected facilities sufficiently, at the discretion of the Resident Engineer, to ascertain the foregoing, Contractor shall be permitted to proceed with a combination of hand and machine excavation, as appropriate, outside a zone of protection whose limit shall be defined as a perimeter located twelve (12) inches from the outside face of each gas facility crossings (See "Gas Cost Sharing Work Standard Sketch No. 2"). If the facilities are in direct interference with City work, meaning that "Minimum Clearances" described in "General Provisions; Gas Cost Sharing Work Paragraph No. 8" cannot be maintained, and excavation has to be temporarily or permanently abandoned then this particular location shall become a test pit and dealt with as specified in Section 6.07, and "General Provisions; Gas Cost Sharing Work Paragraphs Nos. 2 and 8".

B. Support: Gas mains or services crossing excavations equal or less than four (4) feet wide are generally self supporting, unless field conditions as determined by the Resident Engineer require otherwise. The support requirements for gas mains and services crossing excavations greater than four (4) feet wide shall be as shown on the attached "Gas Cost Sharing Work Standard Sketch No. 1" and Contractor shall use sheeting methods that permit the maintenance of gas facilities in their existing locations and configurations. Alternate methods equivalent to those shown on the sketch or accommodations by the facility operator proposed by the Contractor in order to facilitate the execution of the specified work shall be allowable, provided that prior approval is obtained by the Contractor from the Engineer and the facility operator. The support and protection of gas facilities crossings shown on plans, drawings, listings or otherwise identified in this contract shall not be circumvented with the issuance of so called "order outs".

3. Method Of Measurement:

The Contractor shall be paid for supporting and/or protecting gas facilities crossing trench excavations under the appropriate bid items covered by this section. The Contractor shall be directly responsible to the facility operator for the total cost of using any alternate method requiring the use of resources owned by the facility operator. Regardless of the method used, the City shall pay the bid price for the appropriate support and/or protect item of work. The average rate charged by the facility operator for alternate support and protection work such as, disconnecting and reconnecting gas services is listed in attached "Schedule GCS-A".

4. Payment Restrictions:

These items shall not be paid for: gas services crossing unsheeted water main trench excavation; abandoned gas main/services identified by facility operator; gas mains/services crossing trench excavations for fire hydrant branch connections pipes, catch basins and/or chutes (sewer drain pipe), house sewer and/or water services; gas facilities encroaching any face of excavation for sewer and/or

water construction, all of which are covered under other contract sections. Also this item shall not be paid for new gas mains and services crossing water trenches when trenching for such new facilities has been performed by the Contractor in common with trench excavation for City work (overlapping trench limits). The cost of supporting and protecting such gas facilities crossings shall be deemed included in the cost of trench excavation for the new gas facilities. This payment restriction shall apply even if such common trench gas excavation is not part of the contract. The prices bid for items covered by this section represent full compensation to Contractor to completely perform the work described. No other bid items shall be combined with these items in order to pay for gas main and/or services crossing excavations specified herein.

5. Method Of Payment:

Each (Ea.) gas facility crossing trench excavation as described in these specifications shall be counted for payment.

6. Price To Cover:

The cost of timber/steel supports installed for gas facilities shall be included in the bid price. The bid price for each crossing shall also cover all additional supervision, labor, material (except those provided by the facility operator), equipment and insurance necessary to completely maintain the gas facilities without disruption of service to the customers and in accordance with contract plans, specifications and facility operator standards. The price shall also include: changes of method of operations; sheeting modifications where necessary to accommodate the gas facilities crossings; installation and removal of water pipe under gas facilities (so called "snaking"); extra care during excavation (including hand excavation under existing single and multiple gas facilities); extra backfilling and compaction around, over and under gas facilities; installation and removal of sheeting around gas facilities; associated maintenance and protection of traffic; barricades; and traffic plates that may be required to temporarily close and/or complete the work.

SECTION 6.02 - Extra Excavation For The Installation Of Catch Basin Sewer Drain Pipes With Gas Interferences.

1. Description:

Under this item, the Contractor shall provide all labor, materials, equipment, insurance, and incidentals for the extra excavation associated with the installation of catch basin sewer drain pipes (chute) under gas facilities of various sizes crossing the trench excavation at various angles and depth at the locations shown in the contract documents and also, for the support and protection of these facilities during associated excavation and backfill operations. The gas company operating in the area, (facility operator), owns these facilities.

2. Method Of Measurement:

The bid price shall be per location (Each) where extra excavation is required when catch basin sewer drain pipes are installed at an upstream invert depth lower than four (4) feet (up to a maximum of six (6) feet) from the proposed pavement grade because the bottom faces of interfering gas mains and appurtenances are located at a depth greater than three (3) foot eight (8) inches from proposed pavement surface (See "Gas Cost Sharing Work Standard Sketch No. 4").

3. Method Of Construction:

Incremental cost responsibility for chute excavation is determined by the first private facility encountered starting from catch basin structure proper and that prevents the installation of the chute connection at an upstream cover less than or equal to three (3) feet or any other minimum cover required to avoid City facilities (e.g. water, sewer, etc.) as directed by the Resident Engineer.

4. Payment Restrictions:

This item shall not apply and related bid item shall not be paid in cases where:

A. Upstream invert chute is more than six (6) feet deep because of gas facilities.

B. Chute cannot be installed above existing gas facilities because of interferences with other private facilities that are not otherwise covered under this contract, regardless of upstream invert depth.

The above cases shall be at no cost to the City, but shall be a matter of adjustment between the Contractor and the facility operator(s).

5. Price To Cover:

The bid price shall cover the additional cost of all additional supervision, labor, materials, equipment and insurance, to complete the installation of catch basins and associated sewer connections in accordance with the contract plans and specifications. The price shall include: excavation by hand around and under single and multiple gas facilities; locating, supporting and protecting gas facilities; backfilling and all other items necessary to perform all work incidental thereto including: installation and removal of drain pipe under gas facilities ("snaking"); widening of trenches to facilitate the above work; subsequent additional backfill and pavement restoration; modifying precast catch basin window to accommodate connection; changing sheeting method and configuration to accommodate gas facility crossings; maintenance and protection of traffic; barricades; and installation of traffic plates that may be required to temporarily close and/or complete the work. The price shall not include removal of ledge rock and/or excavation of boulders in open cut.

SECTION 6.02.1 - Extra Excavation For The Installation Of Catch Basin Sewer Drain Pipes With Upstream Inverts Greater Than Six (6) Feet.

1. Description:

Under this item, the Contractor shall provide all labor, materials, equipment, insurance and incidentals for the extra excavation of catch basin chutes where the upstream invert is greater than six (6) feet under gas facilities of various sizes crossing the trench excavation at various angles and depth at the locations shown in the contract documents or as determined by field conditions and also, for the support and protection of these facilities during the associated excavation, sheeting and backfilling operations.

2. Method Of Measurement:

The bid price shall be per location (Each) where extra excavation and sheeting is required when the catch basin chute installed at an upstream invert depth lower than six (6) feet from the proposed pavement grade because the bottom faces of the interfering gas mains and appurtenances are located at a greater depth than three foot eight inches from the proposed pavement surface only.

3. Method Of Construction:

Incremental cost responsibility for chute excavation is determined by the first private facility encountered during such excavation when initiated from catch basin structure and that prevents the installation of the chute at an upstream cover less than or equal to three (3) feet or any other cover required to avoid City facilities as directed by the Resident Engineer.

4. Payment Restriction:

This item shall not apply and related bid item shall not be paid in cases where:
Upstream invert chute is less than or equal to six (6) feet deep because of gas facilities. Section 6.02 shall be paid.

5. Price To Cover:

The bid price shall cover the additional cost of all supervision, labor, materials, equipment and insurance to complete the installation of catch basin and associated sewer connections in accordance with the contract plans and specifications. The price shall include: excavation by hand around and under single and multiple gas facilities; locating, supporting and protecting gas facilities incidental thereto; widening of trenches to facilitate the above work; subsequent additional backfilling and pavement restoration; modifying pre-cast basin window to accommodate connection; the installation of catch basin with deeper sumps as specified; additional sheeting and changes in sheeting method and configuration to accommodate gas facility crossings; maintenance and protection of traffic; barricades; and installation of traffic plates that may be required to temporarily close and/or complete the work.

SECTION 6.03 - Removal Of Abandoned Gas Facilities. All Sizes.

1. Description:

Under this section the Contractor shall provide all labor, materials, equipment, insurance and, incidentals required for the removal of abandoned gas mains, services, or appurtenances thereof, located within the street shown on the contract plans, owned by gas company operating in the project area (facility operator), used or to be used for or in connection with or to facilitate the conveying, transportation, distribution or furnishing of gas (natural or manufactured or mixture of both) for light, heat, or power, but does not include property used solely for or in connection with business of selling, distributing or furnishing of gas in enclosed containers. Such removal shall include only abandoned gas facilities that interfere with (i.e. cause additional work) City work.

2. Determination Of Operating Status Of Gas Facilities:

The Contractor shall notify facility operator, as required by New York State Industrial Code 753. Gas facilities shall not be removed without the approval of the facility operator whose authorized representative shall certify in writing (specific facility or area wide facilities certification) and in a timely manner acceptable to the Resident Engineer that abandoned facilities are free of combustible gas and any other environmental contaminants prior to removal. The Resident Engineer shall rely on facility operator's certification. The facility operator may request the excavation of test pits (See Section 6.07) for this determination ahead of City work and, Contractor shall provide safe access, facilitate and permit facility operator to enter test pit excavations for the purpose of testing gas facilities to be removed by the Contractor. However, facility operator may prefer to make this test during performance of City work, in order to issue the above certification. This shall be permitted provided that it is agreed that additional costs, if any resulting from this choice shall be a matter of adjustment between the Contractor and facility operator only, and at no cost to the City.

3. Restrictions:

The facility operator shall be solely responsible for its contaminated gas facilities, surrounding contaminated soil and their disposal and abatement procedures, unless contract bid items are applicable and provided for such work. In such cases, the quantity removed shall be charged to EP-7 bid item "UTL-GCS-2WS - GAS INTERFERENCES AND ACCOMMODATIONS" at the City bid prices.

4. Method Of Measurement:

Abandoned gas pipeline removal shall be measured for payment per linear foot of pipe and appurtenances removed.

5. Price To Cover:

The price shall cover all additional cost of supervision, labor, materials, equipment, and insurance necessary to complete this work in accordance with the contract plans and specifications, including excavation by hand around and under other City and facility operator owned properties and, where necessary, support and protection of such properties. The price shall also cover breaking, cutting, and/or burning of abandoned gas pipes and their disposal from the site; sealing open ends remaining in the excavation with concrete or caps (caps to be provided by the facility operator) and backfilling of the area where the pipeline has been removed with clean backfill. The price shall also include any required dump charges. This item does not include any type of extra excavation, backfilling, compaction, pavement removal and restoration associated with abandoned gas facilities removal, all of which are covered under Section 6.06.

SECTION 6.03.1 - Removal Of Abandoned Gas Facilities With Possible Coal Tar Wrap. All Sizes. (For National Grid Work Only)

1. Description:

Under this section the Contractor shall provide all labor, materials, equipment, insurance and, incidentals required for the removal of abandoned gas mains, services or appurtenances thereof, located within the street shown on the contract plans, owned by the gas company operating in the project area (facility operator), used or to be used for or in connection with or to facilitate the conveying, transportation, distribution or furnishing of gas (natural or manufactured or mixture of both) for light, heat, or power, but does not include property used solely for or in connection with business of selling, distributing or furnishing of gas in enclosed containers. Such removal shall include only abandoned gas facilities that interfere with (i.e. cause additional work) City work. These gas facilities may be coated with Coal Tar Wrap and so, may require special handling and disposal methods as specified in National Grid Standard Operating Procedure 12-2, Coal Tar Wrap Handling and 12NYCRR56.

2. Determination Of Operating Status Of Gas Facilities:

The Contractor shall notify facility operator, as required by New York State Industrial Code 753. Gas facilities shall not be removed without the approval of the facility operator whose authorized representative shall certify in writing (specific facility or area wide facilities certification) and in a timely manner acceptable to the Resident Engineer that abandoned facilities are free of combustible gas and any other environmental contaminants prior to removal. The Resident Engineer shall rely on the facility operator's certification. The facility operator may request the excavation of test pits (See Section 6.07) for this determination ahead of City work and, the Contractor shall provide safe access, facilitate and permit facility operator to enter test pit excavations for the purpose of testing gas facilities to be removed by the Contractor. However, the facility operator may prefer to make this test during performance of City work, in order to issue the above certification. This shall be permitted provided that it is agreed that additional costs, if any, resulting from this choice shall be a matter of adjustment between the Contractor and the facility operator only, and at no cost to the City contract. Should such investigation result in the determination that the abandoned gas facilities do not contain Coal Tar Wrap then the removal of said facilities shall be covered under separate item (See Section 6.03).

3. Requirements:

The City Contractor shall excavate abandoned gas facility sufficiently, either in its entirety, or at locations determined by Contractor to allow the removal of Coal Tar Wrap (if present on the abandoned gas facility) and to facilitate the safe extraction of manageable lengths of abandoned pipe without damage to adjacent facilities, utilities or City structures either parallel to or crossing above or below abandoned gas facility. The Contractor is to allow access to the designated cutting points within the Contractor's trench by authorized National Grid personnel who will remove the Coal Tar Wrap as per National Grid procedures. This work by National Grid personnel shall be performed in a timely fashion and shall not unduly impede the Contractor's progress and/or productivity. Upon completion of the coating removal, the Contractor shall be allowed to cut, burn or grind the gas facility and remove the section of abandoned pipe. The

Contractor at a site designated by the Contractor shall stockpile the removed pipe. The facility operator will be responsible to provide trucking and disposal services with its own personnel and shall remove the stockpiled pipes during off hours or during such time as agreed to by the Contractor. Since the pipe removed will remain the property of the facility operator and is to be disposed of by the facility operator, the facility operator shall be responsible for any required notifications, filings, dump charges and incidentals associated with the disposal of abandoned gas facilities found to contain Coal Tar Wrap.

4. Method Of Measurement:

Abandoned gas pipeline removal shall be measured for payment per linear foot of pipe and appurtenances removed.

5. Price To Cover:

The price shall cover all additional cost of supervision, labor, materials, equipment and insurance necessary to complete this work in accordance with the contract plans and specifications, including excavation by hand around and under other City and facility operator owned properties and, where necessary, the support and protection of such properties. The cost shall also include hand excavation in the area(s) of proposed abandoned pipe cut(s), cutting and/or burning of abandoned gas pipes and stockpile of removed sections of abandoned pipe and associated maintenance and protection of traffic, blocking and temporary fencing if required. The unit price shall also cover sealing open ends remaining in the excavation with concrete or end caps (end caps to be provided by the facility operator) and backfilling of the area where the abandoned pipeline has been removed with clean backfill material. This item does not include any type of extra excavation, backfilling, compaction, pavement removal and/or restoration (temporary and permanent) associated with abandoned pipe removal ("lost trench"), all of which are covered under separate Section 6.06. The price shall also include allowance for any loss of productivity by the Contractor due to required facility operator work to remove pipe coating and prepare pipe for cutting as well as any change in Contractor's excavation method, additional trucking and/or stockpiling costs.

SECTION 6.03.1a - Removal Of Abandoned Gas Facilities With Possible Coal Tar Wrap. All Sizes. (For Con Edison Work Only)

1. Description:

Under this section the Contractor shall provide all labor, material, equipment, insurance and, incidentals required to prepare abandoned gas mains, services and appurtenances thereof located within the street shown on contract plans, owned by the gas company operating in the project area (facility operator), for removal due to interference with proposed City work. These abandoned gas facilities were, at one time, used for or in connection with or to facilitate the conveying, transportation, distribution or furnishing of gas (natural, manufactured or a combination of both) for light, heat, or power, but does not include property used solely for or in connection with business of selling, distribution or furnishing of gas in enclosed containers. Such preparation for removal shall include only abandoned gas facilities that interfere with (i.e. cause additional work) City work. These gas facilities may be coated with Coal Tar Wrap which may contain asbestos or PCB's and so, may require special handling and disposal methods as specified in Con Edison - ASBESTOS MANAGEMENT MANUAL, CHAPTER 6 - ASBESTOS WORK PROCEDURES, SECTION 06.04 - COAL TAR WRAP REMOVAL. For under 25' (feet) in length and an approved NYC-DEP variance for over 25' (feet).

2. Determination Of Operating Status Of Gas Facilities:

The Contractor shall notify facility operator, as required by New York State Industrial Code 753. Gas Facilities shall not be removed without the approval of the facility operator whose authorized representative shall certify in writing (specific facility or area wide facilities certification) and in a timely manner acceptable to the Resident Engineer that abandoned facilities are free of combustible gas and any other environmental contaminants prior to removal. The Resident Engineer shall rely on the facility

operator's certification. The facility operator may request the excavation of test pits (See Section 6.07) for this determination ahead of City work and Contractor shall provide safe access, facilitate and permit facility operator to enter test pit excavations for the purpose of testing gas facilities. However, the facility operator may prefer to make this test during performance of City work in order to issue the above certification. This shall be permitted provided that it is agreed that additional costs, if any, resulting from this choice shall be a matter of adjustment between the Contractor and the facility operator only, and at no cost the City contract. Should such investigation result in the determination that the abandoned gas facilities do not contain Coal Tar Warp then the removal of said facilities shall be covered under separate item (See Section 6.03).

3. Requirements:

The Contractor shall excavate abandoned gas facility sufficiently, either in it's entirety, or at locations determined by Contractor to allow the removal of Coal Tar Wrap (if present on the abandoned gas facility) and to facilitate the safe extraction of manageable lengths of abandoned pipe without damage to adjacent facilities, utilities or city structures either parallel to or crossing above or below abandoned gas facility. The Contractor is to allow access to the designated cutting points within the Contractors trench by authorized Con Edison personnel who will remove the Coal Tar Wrap as per Con Edison and/or NYC-DEP approved procedures. This access shall conform to all applicable codes, rules & regulations. This work by Con Edison personnel shall be performed in a timely fashion and shall not unduly impede the Contractors progress and/or productivity. Upon completion of the coating removal, the Contractor shall be allowed to cut, burn or grind the gas facility and remove the section of abandoned pipe. Contractor shall designate a specific site to stockpile those removed pipes. The facility operator will be responsible to provide trucking and disposal services with its own personnel and shall remove the stockpiled pipes during off hours or during such time as agreed to by the Contractor. Since the pipe removed will remain the property of the facility operator and is to be disposed of by the facility operator, the facility operator shall be responsible for any required notifications, filings, dump charges and incidentals associated with the disposal of abandoned gas facilities found to contain Coal Tar Wrap.

4. Method Of Measurement:

Abandoned gas facility removal shall be measured for payment per linear foot of pipe and appurtenances removed.

5. Price To Cover:

The price shall cover all additional cost of supervision, labor, materials, equipment and insurance necessary to complete this work in accordance with the plans and specifications, including, but not limited to, excavation by hand around and under other City and facility operator owned properties and, where necessary, the support and protection of such properties. The cost shall also include hand excavation in the area(s) of proposed abandoned pipe cut(s), cutting and/or burning of abandoned gas pipes and stockpile of removed sections of abandoned pipe and associated maintenance of traffic, blocking and temporary fencing if required. The unit price shall also cover sealing open ends remaining in the excavation with concrete or end caps (end caps to be supplied by facility operator) and backfilling of the area where the abandoned pipeline has been removed with clean backfill material. This item does not include any type of extra excavation, backfilling, compaction, pavement removal and/or restoration (temporary and permanent) associated with abandoned pipe removal ("lost trench"), all of which are covered under separate Section 6.06. The price shall also include allowance for any loss of productivity by the Contractor due to required facility operator work to remove pipe coating and prepare pipe for cutting as well as any change in Contractor excavation method, additional trucking and/or stockpiling costs.

SECTION 6.04 - Adjust Hardware To Grade Using Spacer Rings/Adaptors. (Street Repaving.)

1. Description:

Under this section, the Contractor shall provide all labor, supervision, materials, equipment, insurance and incidentals required to adjust to final grade gas street surface hardware located within the contract area boundaries shown on the plans. The gas company operating in the area, (facility operator), owns these facilities. The work shall be performed in accordance with the contract plans, specifications and at the directions of the Resident Engineer in concurrence with authorized representative of the facility operator.

2. Materials:

The facility operator shall furnish and deliver all prefabricated hardware parts required. These include adaptors for the grade adjustment proper and new street hardware if existing ones are found to be defective, all in accordance with the facility operator standards and City rules and regulations. The Contractor shall notify the facility operator of the installation schedule at least three (3) business days before materials are required on the site. Should the facility operator fail to deliver the necessary material according to any schedule mutually agreed upon by the Contractor and facility operator, the City shall not be responsible for any delays attributable thereto, nor for the failure of delivery of such materials. On project where material storage is not permitted on site, the facility operator shall deliver the required material to the Contractor's yard and it shall be the Contractor's responsibility to transport the material to the work site when needed for installation. It shall also be the Contractor's responsibility to inspect the materials to be installed by him immediately upon delivery and advise the facility operator through its authorized representative, of all damaged materials. The Contractor at no additional expense to the City or the facility operator shall replace any material that is damaged or lost after the Contractor's inspection.

3. Method Of Measurement:

The Contractor shall be paid for each six (6) inch round box and/or nine (9) inch square box adjusted to grade regardless of adjustment height requirements.

4. Price To Cover:

The unit price bid for this item shall include all additional labor, supervision, insurance, equipment and, material (except those to be provided by the facility operator), required to adjust each box to grade as required in the contract plans and specifications. The bid price shall also include the removal of existing frames and covers from existing facilities to be salvaged and returned to the facility operator and, all material transportation from the Contractor's material storage yard to the work site. In addition the bid price shall include "chipping" around existing box using appropriate means and methods where grinding is required.

SECTION 6.05 - Adjust Hardware To Grade By Resetting. (Road Reconstruction.)

1. Description:

Under this item, the Contractor shall provide all labor, supervision, materials, equipment, insurance and incidentals required to adjust to the proposed grade gas street surface hardware located within the contract area boundaries shown on the plans. The gas company operating in the area, (facility operator), owns these facilities. The work shall consist of either building up or lowering or resetting the casting by removing the existing frame and cover building up or decreasing the existing installation, replacing the frame and/or cover if damaged or worn out, as determined by the Resident Engineer, with a new frame and/or cover furnished by the owner, and setting the frame and cover to new elevation. The work shall be performed in accordance with the contract plans, specifications and at the directions of the Resident Engineer.

2. Materials:

The facility operator shall furnish and deliver all new hardware parts required. The Contractor shall furnish materials such as mortar, bricks and concrete in compliance with contract requirements. At locations

where high-early strength concrete is required under this contract to be placed adjacent to gas facilities, then the requirement for concrete shall be high-early strength complying with the current New York State Department of Transportation, Standard Specifications for Class F concrete. Existing castings may be replaced as required and deemed necessary by the Engineer and by City rules and regulations. The Contractor shall install the new castings of various sizes furnished by the facility operator. The Contractor shall notify the facility operator of the installation schedule at least three (3) business days before materials are required on the site and, shall provide off-loading services to the facility operator. Should the facility operator fail to deliver the necessary material according to any schedule mutually agreed upon by the Contractor and facility operator, the City shall not be responsible for any delays attributable thereto, nor for the failure of delivery of such materials. Such delays shall be a matter of adjustment between the Contractor and the facility operator. On project where material storage is not permitted on site, the facility operator shall deliver the required material to the Contractor's yard and it shall be the Contractor's responsibility to transport the material to the work site when needed for installation. It shall also be the Contractor's responsibility to inspect the materials to be installed by him, immediately upon delivery and advise the facility operator through its authorized representative, of all damaged materials. The Contractor at no additional expense to the City or the facility operator shall replace any material that is damaged or lost after the Contractor's inspection.

3. Methods Of Construction:

The Contractor shall remove and reinstall existing castings or install new castings to the proposed grade. Setting and resetting the castings shall be done with mortar and brick according to the standards of the facility operator. Work shall be performed in a workmanlike manner. Castings that are deemed unacceptable for resetting shall remain the property of the facility operator and he shall be responsible for their removal and proper disposal from site. No traffic shall be allowed on adjusted street hardware until permitted by the Engineer.

4. Method Of Measurement:

The Contractor shall be paid for each gas hardware adjusted to grade regardless of size or adjustment height requirements (up or down).

5. Price To Cover:

The unit price bid for this item shall include all additional labor, supervision, insurance, equipment and, material (except those to be provided by the facility operator), required to adjust each gas hardware to grade as required in the contract plans and specifications. The bid price shall also include the removal of existing frames and covers from existing facilities; building up the existing installations with bricks and mortar, or lowering the existing installation by removing bricks and mortar; replacing damaged frames and/or covers with new frames and/or covers furnished by the facility operator; setting the frames and covers to the new elevations; protect existing installations; repair minor structural damages to existing installations prior to resetting frames; unloading of furnished castings at the Contractor's yard and transporting castings from the Contractor's yard to the job site as required; completing the work in accordance with the contract plans, specifications and, at the directions of the Engineer. In addition the bid price shall include "chipping" around existing gas facilities using appropriate means and methods where grinding is required.

SECTION 6.06 - Special Care Excavation And Backfilling.

1. Description:

Under this section, the Contractor shall provide all labor, materials, equipment, insurance and incidentals required to support and protect the integrity of live gas facilities including mains, services, related structures and appurtenances during excavations. The gas company operating in the area, (facility operator), owns these facilities. The work shall be performed in accordance with the contract plans, specifications and at the directions of the Resident Engineer in consultation with authorized

representatives of the facility operator.

2. Applicability Of Section:

This section shall apply to live gas facilities of various sizes located within two (2) feet of any face of unsheeted excavation, (unsheeted excavation refers to any excavation performed for city work and includes excavations performed that are to be subsequently sheeted using approved methods) and paralleling or, encroaching any face of excavation. Also, for crossings greater than forty-five (45) degrees and/or located at a cover depth greater than five (5) feet from existing street surface. Parallel facilities are not exposed at any time during excavation (See "Gas Cost Sharing Work Standard Sketch No. 5"). Encroaching facilities are partially exposed inside the limit of excavation (See "Gas Cost Sharing Work Standard Sketch No. 5"). This section shall also apply to gas facilities crossing catch basins excavation, and catch basins sewer connections (chutes) trench excavation only when extra depth (covered in other section), is not required for chutes installations because of such utilities interferences (See "Gas Cost Sharing Work Standard Sketch No. 3"). This section shall also apply to gas services (if shown or otherwise listed in contract documents) crossing unsheeted excavations for water mains, gas facilities crossing fire hydrant branch connections, house sewer and/or water service connections excavations. This section shall also apply for so called "loss trench", as described further, and for additional excavation (pavement and/or soil), backfilling, compaction, roadway base and pavement restoration due to abandoned gas facilities, only if removed by Contractor. If operating status of gas facilities cannot be determined prior to excavation then such facilities shall be considered live and this section shall fully apply. The excavation around fully exposed live gas facilities along and within limits of excavation (not crossings) shall be covered by this section also (not shown on "Gas Cost Sharing Work Standard Sketch No. 5"), however the support requirement, if any is required, of such facilities is beyond the scope of these specifications and therefore shall be the responsibility of facility operator to determine and prescribe, at no cost to the City contract, but shall be a matter of adjustment between the Contractor and facility operator.

3. Payment Restriction:

No special care excavation shall be paid for abandoned gas facilities paralleling and/or encroaching excavation and therefore are not in direct interference with City work. Except as allowed in this section, the bid item specified under this section shall not be used in combination with items covered under other sections for work done due to a particular gas facility. This item shall not be paid for new gas facilities when trenching for such new facilities has been performed by the Contractor of record in common with trench excavation for City Work (overlapping trench limits). The cost of excavating with care as defined in this section shall be deemed included in the cost of trench excavation for the new gas facilities. This restriction shall apply even if such gas common trench excavation is not part of the contract. If facilities are in direct interference with City work, meaning that "Minimum Clearances" described in "General Provisions; Gas Cost Sharing Work Paragraph No. 8" cannot be maintained and excavation has to be temporarily or permanently abandoned then this particular location shall become a test pit and dealt with as specified in Section 6.07 and "General Provisions; Gas Cost Sharing Work Paragraphs Nos. 2 and 8".

4. Method Of Construction:

All excavation in the vicinity of gas facilities shall be as required by NYS Industrial Code 753. Where these facilities are paralleling and located two (2) feet or less from the limits of the proposed excavation, the Contractor shall use hand excavation methods (pick and shovel or hand held power tools) to ascertain the clearances of these facilities with respect to the proposed excavation. Once the location of these facilities with respect to the proposed excavation is verified to the satisfaction of the Resident Engineer, the Contractor shall then proceed with a combination of hand and machine excavation as required preserving the integrity of the facilities. The installation of timber supports or underpinning, when soil foundation cannot fully support partially exposed pipes, may be required to prevent pipe movement as directed by the Resident Engineer.

5. Method Of Payment:

The unit price for this work item shall be based on cubic yard (CY) of average excavation with care and, is

to be considered as an incremental cost for performing City work with gas facilities interferences.

6. Method Of Measurement:

A. For Paralleling Facilities: Volume calculated as: Depth as measured from existing street surface to the bottom of unsheeted trench excavation allowable by OSHA regulations, multiplied by, the width measured as one (1) foot from the face of excavation toward the center of excavation, multiplied by the length of parallel facility, divided by twenty-seven (27) cubic feet per cubic yard (See "Gas Cost Sharing Work Standard Sketch No. 5"). The gas facility is no longer considered to be in interference once sheeting has been installed, therefore no further compensation for paralleling facilities as described above will be made.

B. For Encroaching Facilities: Volume calculated as: Depth of trench as allowable by OSHA, maximum up to five (5) feet multiplied by, the width of partially exposed pipe plus one (1) foot, multiplied by the length of facility encroachment, divided by twenty-seven (27) cubic feet per cubic yard (See "Gas Cost Sharing Work Standard Sketch No. 5").

C. Fully Exposed Gas Facilities: (Not shown on "Gas Cost Sharing Work Standard Sketch No. 5") along and inside trench and/or crossing trench at an angle greater than forty-five (45) degrees and/or a cover depth greater than five (5) feet from the existing street surface. The volume shall be measured as the depth of trench excavation multiplied by the distance measured along the sheeting line between two (2) points of intersections of the gas facilities and the sides of trench excavation, multiplied by the width of trench excavation.

D. For Additional Excavation And Restoration Due To So Called "Loss Trench", When The Integrity Of Pavement And Soil Above And Around Existing Live Gas Facilities Cannot Be Maintained Due To Its Lack Of Cohesiveness: Volume shall be calculated as: Depth of unsheeted trench excavation multiplied by width measured as distance of facility from closest edge of unsheeted excavation plus, width of facility proper plus, one (1) foot or a maximum width of three (3) feet multiplied by length of facility fully exposed divided by, twenty-seven (27) cubic feet per cubic yard (not shown on "Gas Cost Sharing Work Standard Sketch No. 5").

E. For Facilities Crossing Excavation For Catch Basins, Or Chutes Installations (When NYCDEP Funded) Or Fire Hydrant Branch Connections, Or Unsheeted Water Main Trench, Or House Sewer And/Or Water Services: Volume calculated as: Depth as measured from existing street surface to the bottom of the trench excavation multiplied by, the width taken as the outside diameter of pipe or the width of structure plus one (1) foot on either side (two (2) feet), multiplied by, the length of exposed facility crossing the trench, divided by twenty-seven (27) cubic feet per cubic yard (not shown on "Gas Cost Sharing Work Standard Sketch No. 5").

Overlapping volume dimensions measured as described above may occur when multiple facilities are paralleling excavations, encroaching excavations or crossing catch basins and catch basin chute installations. In such cases, all such facilities shall be counted as one limited by the extreme pipes, faces (See "Gas Cost Sharing Work Standard Sketch No. 2"). The volume shall then be calculated as described above.

7. Price To Cover:

The bid price shall also cover all additional supervision, labor, material, equipment and insurance necessary to excavate while protecting and maintaining (excluding supports for fully exposed live gas) gas facilities without disruption of service to the public and in accordance with contract specifications. The price shall also include, changes of sheeting method and excavation width configuration where necessary to accommodate gas facilities in their existing locations; difficulties during the installation of catch basins, chute connections, hydrant branch, and house sewer and water connections under or over gas facilities; loss of productivity due to slower rate of excavation (special care) during excavation, including the use of such methods as: hand excavation around existing single and multiple facilities, extra excavation and backfilling due to lost trench because of existing and adjacent gas facilities, compaction, removal of

sheeting from the facilities, extra roadway base restoration and temporary pavement, associated maintenance and protection of traffic, barricades, and traffic plates that may be required to temporarily close and/or complete the work.

SECTION 6.07 - Test Pits For Gas Facilities.

1. Description:

Under this section, the Contractor shall furnish all labor, materials, insurance, equipment and appliances necessary to excavate, sheet and, maintain test pits at locations approved by the Resident Engineer in consultation with the facility operator. Test pits shall be dug in order to ascertain exact locations, cover and invert elevations, clearances, alignment and operating status (live or dead) of existing gas facilities. The Contractor shall inspect jointly with the Resident Engineer and facility operator, gas facilities and other structures uncovered, take all relevant measurements and elevations as directed by the Resident Engineer. Tests to determine operating status of gas facilities shall be performed by facility operator. The pits shall be covered with steel plates during daytime nonworking hours, and uncovered, as required, until the inspection work is completed. Testing of gas facilities may require a maximum of four (4) hours. Then, the pits shall be backfilled with clean fill, and resurfaced with temporary pavement. All traffic shall be maintained and all safety measures as stipulated shall be complied with.

2. Methods Of Construction:

A. Excavation: Existing pavement to be removed shall be neatly cut along lines of removal with a saw or other approved equipment which leaves a neat straight joint line along the juncture with subsequently replaced pavement. Excavation in the vicinity of utilities and other structures shall be performed using hand tools. Use of hand operated pneumatic and electric jackhammers will be permitted only for breaking pavement and removal of masonry, concrete and boulders, or as otherwise directed by the Resident Engineer. The Contractor shall properly dispose of all materials excavated from test pits away from site. Test pits shall be excavated at locations shown on the contract drawings or as directed by the Resident Engineer. Additional test pits may be required and shall be excavated where required, as ordered by the Resident Engineer. All test pits shall be excavated to a depth and size necessary to locate the existing facilities. Sheeting shall be used when depth of excavation exceeds five (5) feet. The sheeting required shall be furnished and installed in full compliance with the State of New York and Federal Safety Codes requirements and as specified in contract, whichever is more stringent. Care shall be taken that no existing gas facilities or other structures are broken or damaged. All broken or damaged facilities shall be reported immediately to facility operator who shall decide whether such facilities shall be repaired or replaced by company forces or by City contractor and in conformance with "General Provisions; Gas Cost Sharing Work Paragraph No. 9". Contractor shall excavate all material encountered, including large masses of concrete, cemented masonry and boulders, as directed by the Resident Engineer. Any type of excavation protection used, shall satisfy the following:

   (a) Industrial Code Rule 753.
   (b) Prevent injury to workers and the public, and avoid damage to existing water, sewer, and gas pipes or other structures, and to pavements and their foundations, through caving or sliding of the banks of the excavation.

   Should it become necessary, as determined by the Resident Engineer, to enlarge any test pit in any dimension after sheeting has been placed, the Contractor shall remove portions of the sheeting, as necessary, enlarge the test pits as directed, and replace the sheeting without additional compensation for this work other than for the additional volume of material excavated.

B. Maintenance Of Test Pits: Excavated test pits shall be maintained free of debris and kept dry by the Contractor in order to permit the inspection and measurements and to determine the locations of facilities. In order to accomplish this, Contractor shall, upon completion of excavation and placement of sheeting (if depth greater than five (5) feet), furnish and install adequate steel plates and posting

over the excavated pits and shall temporarily remove all equipment debris and workers, and relocate barricades in order to open the full width of street to traffic during nonworking hours. The Contractor shall then, at no additional cost, relocate such barricades, barrels, cones and other warning devices and remove steel plates, as and when directed by the Resident Engineer to facilitate the inspection of exposed facilities. When work is being performed and the pits are not covered with steel plates, the Contractor shall provide complete and safe access to the test pits as may be required, and he shall provide construction barricades and maintain traffic at all times as shown or as directed by the Resident Engineer. Upon completion of test pit inspection by the Resident Engineer, the pit shall be backfilled by the Contractor as specified in contract, except that backfill material shall conform to contract specifications for such purpose.

C. Pavement And Sidewalk Restoration: After backfilling is completed, the Contractor shall construct a temporary pavement consisting of a minimum of four (4) inches thick asphaltic concrete mixture in roadway areas or a two (2) inches thick asphaltic concrete mixture in sidewalk areas in order to maintain existing pedestrian and vehicular traffic. This temporary pavement shall be maintained until permanent pavement and sidewalk replacement is constructed as specified in contract.

3. Measurements:

The quantity to be measured for payment shall be the number of cubic yards of material removed from within the limits of the pit dimensions as directed by the Resident Engineer. The volume occupied by existing pipes or other structures remaining within the maximum payment lines will not be deducted from the total volume measured except, where the cross sectional area of these facilities exceeds four (4) square feet. As determined by the Resident Engineer, the quantity measured for payment may be proportionate to a fair and reasonable estimate of gas responsibility in the total volume excavated.

4. Price To Cover:

The contract price bid per cubic yard for test pits shall cover all additional costs of labor, material, insurance, equipment, appliances and incidentals required to excavate test pits, including removal and disposal of excavated materials, sheeting, steel plating, backfill, compaction and temporary pavement and sidewalk restoration all in accordance with the specifications and as directed by the Resident Engineer. The price shall also include the cost of providing safe access to the excavation by facility operator for the performance of certain test to determine operating status of gas facilities prior to City work. The price shall also include support and protection of all gas facilities crossing excavation, paralleling and/or encroaching any face of excavation.

SECTION 6.09 - Trench Excavation and Backfill for New Gas Mains and Services (For National Grid Work Only)

1. Description:

Under this section, the contractor shall furnish all labor, materials, equipment, insurance, permits and incidentals required to break/remove roadway and sidewalk pavement, excavate, backfill and restore gas trenches. The trench to be excavated shall be determined by the size of the gas facility to be installed. The work shall be performed in accordance with applicable specifications, and/or at the direction of the Resident Engineer in consultation with the facility operator.

2. Materials:

All materials used to excavate and prepare trenches shall be supplied by the Contractor and be approved by the facility operator in consultation with the Resident Engineer.

3. Method of Construction:

Excavation – The Contractor shall saw cut and/or break and remove existing roadway which may include

but is not limited to, asphalt, concrete and cobblestone, utilizing approved equipment that leaves a neat straight joint line along the juncture with subsequently replaced pavement. Prior to starting the trenching operation, the contractor shall excavate the appropriate gas main tie-in pits at the extremities of the gas main sections to be replaced. Test pits shall be excavated to determine exact location of all tie-in pits and at appropriate intervals along proposed trench excavation to verify lane and clearances as shown on the contract plans. The tie-in pits shall be adequately protected by the contractor using wood fencing or steel traffic plates until such time when the facility operator has completed the tie-in work. The Contractor shall be permitted to excavate utilizing a combination of machine and hand excavation, as field conditions warrant, and as directed by the facility operator. The trench shall be adjusted so as to provide for a nominal cover on the new gas facilities or as required based on field conditions, applicable specifications, or as directed by the facility operator in consultation with the Resident Engineer. The width of the trench shall be as directed by the facility operator in consultation of the Resident Engineer. The bottom of the trench shall be graded smooth with a minimum cushion of 3 inches of clean sand and in conformance with applicable specification and be compacted, to minimize initial settlement and to avoid "point" support of new gas facilities. All stones projecting into the trench bottom shall be removed, and the voids backfilled before the new gas facilities are installed. Where streets are not to final grade, the cover shall be measured from the final grade, or the existing grade, whichever provides the deeper trench. Excavation in the vicinity of utilities and other structures shall be performed using hand tools. The contractor shall properly dispose of all materials excavated away from site. Size and location of excavation shall be as directed by the facility operator in consultation with the Resident Engineer. Trenches shall be excavated to a depth and size necessary to facilitate the installation of the new gas facility and in conformance with the applicable specification. All existing facilities that are encountered during trench excavating shall be protected in a manner suitable to the facility operator in consultation with the Resident Engineer. Tight sheeting shall be used, as required, based on field conditions and/or when the depth of excavation is equal to or greater than five feet. Skeleton type sheeting will not be permitted. The sheeting required shall be furnished and installed in full compliance with the State of New York and Federal Safety Code requirements and in compliance with applicable specifications and/or as directed by the facility operator in consultation with the Resident Engineer. Care shall be taken that no existing gas facilities or other structures are broken or damaged. Contractor shall excavate all material encountered necessary to facilitate the installation of the new gas facilities, and as directed by the facility operator. Care should be taken to avoid damage to existing utility facilities and structures, and to pavements and their foundations, and to avoid caving or sliding banks within the excavation.

Maintenance of Trench Excavation - Excavated trenches shall be maintained free of debris and kept dry by the contractor. In order to accomplish this, contractor shall, upon completion of excavation and placement of sheeting (as required and/or if depth is equal to or greater than five feet), furnish and install adequate steel plates, as directed by the facility operator in consultation with the Resident Engineer, and posting over the excavated trenches and shall temporarily remove all equipment debris and workers, and relocate barricades in order to open the full width of street to traffic during non-working hours, as required based on DOT requirements. National Grid forces will perform all live gas main connections, dead gas main cut-outs, and/or service work associated with disconnecting and reconnecting from old to new gas main The Contractor shall then, at no additional cost, relocate such barricades barrels, cones and other warning devices and remove steel plates, as and when directed by the facility operator in consultation with the Resident Engineer to facilitate the installation of the new gas facilities. When work is being performed and the excavations are not covered with steel plates, the Contractor shall provide complete and safe access to the trench as may be required, and shall provide construction barricades and maintain traffic at all times as shown or as directed by the facility operator in consultation with the Resident Engineer. The contractor has the responsibility to maintain and set to grade all National Grid hardware during backfill and pavement restoration. Upon completion of installation of the new gas facility, the trench excavation shall be backfilled by the contractor in accordance with Contract requirements and all backfill material shall conform to contract specifications for such purpose.

Pavement and Sidewalk Restoration - After backfilling is completed, the contractor shall install temporary pavement consisting of six inches (6") thick asphaltic concrete mixture in roadway areas or a two inches (2") thick asphaltic concrete mixture in sidewalk areas in order to maintain existing pedestrian and vehicular traffic. This temporary pavement shall be maintained until permanent replacement as specified in contract. Permanent pavement restoration shall be as required by the appropriate contract

specifications and as directed by the Resident Engineer.

4. Method of Measurement:

The quantity to be measured for payment shall be the number of cubic yards (C.Y.) of trench actually excavated, including roadway pavement, base and/or sidewalk concrete removed within the limits of the trench as directed by the Resident Engineer in consultation with the facility operator. The volume occupied by existing pipes or other structures will be deducted from the total volume measured as shown on contract drawing(s) Title: EP-7 SECT. 6.09 GAS SPECIALTY CONTRACTOR WORK, or as encountered based on existing field conditions.

5. Price to Cover:

The unit price bid per cubic yard for excavation shall include the cost of all supervision, labor, material, equipment, insurance and incidentals necessary to complete excavation trenches, including backfill, compaction testing and restoration of trenches and tie-ins pits as specified or shown on the contract, plans. The bid price shall also include the cost of coordinating the sewer and water main work to be performed by the contractor with the gas installation work to be performed by others. The price shall also include, associated maintenance of traffic, and traffic plates and openings and closings of plates as may be required in order to provide access to the facility operator during the new gas facility installation, and installing, removing and maintaining tight sheeting that may be required, cut, break and remove various thickness of surface and base pavement, excavate by hand, furnish, place and compact, in compliance with DOT requirements, clean sand backfill following installation of the gas facility. Any required removing, trucking, storing, and disposing of material shall be deemed included in the unit price. The price shall also include the cost of providing temporary pavement restoration. Permanent pavement restoration shall be deemed included in this item, as required and as directed by the Resident Engineer.

SECTION 6.09a Trench Excavation and Backfill for New Gas Mains and Services (For Con Edison Work Only)

1. Description:

Under this section, the contractor shall furnish all labor, materials, equipment, insurance, permits and incidentals required to break/remove roadway and sidewalk pavement, excavate, backfill and restore gas trenches. The trench to be excavated shall be determined by the size of the gas facility to be installed. The work shall be performed in accordance with applicable specifications, and/or at the direction of the Resident Engineer in consultation with the facility operator.

2. Materials:

All materials used to excavate and prepare trenches shall be supplied by the Contractor and be approved by the facility operator in consultation with the Resident Engineer. Clean sand backfill material shall be used and shall conform to Con Edison specification EO-1181-rev.6, General Specification for Backfilling of Trench and Small Openings.

3. Method of Construction:

Excavation – The Contractor shall saw cut and/or break and remove existing roadway which may include but is not limited to, asphalt, concrete and cobblestone, utilizing approved equipment that leaves a neat straight joint line along the juncture with subsequently replaced pavement. Prior to starting the trenching operation, the contractor shall excavate the appropriate gas main tie-in pits at the extremities of the gas main sections to be replaced. Test pits shall be excavated to determine exact location of all tie-in pits and at appropriate intervals along proposed trench excavation to verify lane and clearances as shown on the contract plans. The tie-in pits shall be adequately protected by the contractor using wood fencing or steel traffic plates until such time when the facility operator has completed the tie-in work. The Contractor shall be permitted to excavate utilizing a combination of machine and hand excavation, as field conditions warrant, and as directed by the facility operator. The trench shall be adjusted so as to provide for a

nominal cover on the new gas facilities or as required based on field conditions, applicable specifications, or as directed by the facility operator in consultation with the Resident Engineer. The width of the trench shall be as directed by the facility operator in consultation of the Resident Engineer. The width and depth of the trench shall conform to Con Edison Gas Operations drawing 309495 rev. 4, Trench Excavation for Gas Mains Up to 350 PSIG, or as directed by the facility operator in consultation of the Resident Engineer. The bottom of the trench shall be graded smooth with a minimum cushion of 3 inches of clean sand and in conformance with applicable specification and be compacted, to minimize initial settlement and to avoid "point" support of new gas facilities. All stones projecting into the trench bottom shall be removed, and the voids backfilled before the new gas facilities are installed. Where streets are not to final grade, the cover shall be measured from the final grade, or the existing grade, whichever provides the deeper trench. Excavation in the vicinity of utilities and other structures shall be performed using hand tools. The contractor shall properly dispose of all materials excavated away from site. Size and location of excavation shall be as directed by the facility operator in consultation with the Resident Engineer. Trenches shall be excavated to a depth and size necessary to facilitate the installation of the new gas facility and in conformance with the applicable specification. All existing facilities that are encountered during trench excavating shall be protected in a manner suitable to the facility operator in consultation with the Resident Engineer. Tight sheeting shall be used, as required, based on field conditions and/or when the depth of excavation is equal to or greater than five feet. Skeleton type sheeting will not be permitted. The sheeting required shall be furnished and installed in full compliance with the State of New York and Federal Safety Code requirements and in compliance with applicable specifications and/or as directed by the facility operator in consultation with the Resident Engineer. Care shall be taken that no existing gas facilities or other structures are broken or damaged. Contractor shall excavate all material encountered necessary to facilitate the installation of the new gas facilities, and as directed by the facility operator. Care should be taken to avoid damage to existing utility facilities and structures, and to pavements and their foundations, and to avoid caving or sliding banks within the excavation.

Maintenance of Trench Excavation - Excavated trenches shall be maintained free of debris and kept dry by the contractor. In order to accomplish this, contractor shall, upon completion of excavation and placement of sheeting (as required and/or if depth is equal to or greater than five feet), furnish and install adequate steel plates, as directed by the facility operator in consultation with the Resident Engineer, and posting over the excavated trenches and shall temporarily remove all equipment debris and workers, and relocate barricades in order to open the full width of street to traffic during non-working hours, as required based on DOT requirements. Con Edison forces will perform all live gas main connections, dead gas main cut-outs, and/or service work associated with disconnecting and reconnecting from old to new gas main The Contractor shall then, at no additional cost, relocate such barricades barrels, cones and other warning devices and remove steel plates, as and when directed by the facility operator in consultation with the Resident Engineer to facilitate the installation of the new gas facilities. When work is being performed and the excavations are not covered with steel plates, the Contractor shall provide complete and safe access to the trench as may be required, and shall provide construction barricades and maintain traffic at all times as shown or as directed by the facility operator in consultation with the Resident Engineer. The contractor has the responsibility to maintain and set to grade all Con Edison hardware during backfill and pavement restoration. Upon completion of installation of the new gas facility, the trench excavation shall be backfilled by the contractor in accordance with Contract requirements and all backfill material shall conform to contract specifications for such purpose.

Pavement and Sidewalk Restoration - After backfilling is completed, the contractor shall install temporary pavement consisting of six inches (6") thick asphaltic concrete mixture in roadway areas or a two inches (2") thick asphaltic concrete mixture in sidewalk areas in order to maintain existing pedestrian and vehicular traffic. This temporary pavement shall be maintained until permanent replacement as specified in contract. Permanent pavement restoration shall be as required by the appropriate contract specifications and as directed by the Resident Engineer.

4. Method of Measurement:

The quantity to be measured for payment shall be the number of cubic yards (C.Y.) of trench actually excavated, including roadway pavement, base and/or sidewalk concrete removed within the limits of the trench as directed by the Resident Engineer in consultation with the facility operator. The volume occupied

by existing pipes or other structures will be deducted from the total volume measured as shown on contract drawing(s) Title: EP-7 SECT. 6.09 GAS SPECIALTY CONTRACTOR WORK, or as encountered based on existing field conditions.

5. Price to Cover:

The unit price bid per cubic yard for excavation shall include the cost of all supervision, labor, material, equipment, insurance and incidentals necessary to complete excavation trenches, including backfill, compaction testing and restoration of trenches and tie-ins pits as specified or shown on the contract, plans. The bid price shall also include the cost of coordinating the sewer and water main work to be performed by the contractor with the gas installation work to be performed by others. The price shall also include, associated maintenance of traffic, and traffic plates and openings and closings of plates as may be required in order to provide access to the facility operator during the new gas facility installation, and installing, removing and maintaining tight sheeting that may be required, cut, break and remove various thickness of surface and base pavement, excavate by hand, furnish, place and compact, in compliance with DOT requirements, clean sand backfill following installation of the gas facility. Any required removing, trucking, storing, and disposing of material shall be deemed included in the unit price. The price shall also include the cost of providing temporary pavement restoration. Permanent pavement restoration shall be deemed included in this item, as required and as directed by the Resident Engineer.

GAS COST SHARING STANDARD SPECIFICATIONS
SCHEDULE GCS-A

Average rate charged by utility companies to Disconnect and Reconnect Gas Services:

1. National Grid - $586.90 per Service/and Visit
2. Con Edison - $524.00 per Service/and Visit

IV - STANDARD SKETCHES; GAS COST SHARING WORK

Hereinafter attached are the following Standard Sketches for Gas Cost Sharing Work:

Sketch No. 1 - Support Requirements For Gas Mains And Services Crossing Excavation Greater Than 4' - 0" Wide At Any Angle

Sketch No. 1A - Support Requirements For Gas Mains Over 16" Diameter Up To And Including 48" Diameter Crossing Excavation At Any Angle

Sketch No. 2 - Typical Methods Of Measurement For Gas Crossings

Sketch No. 3 - Utility Crossings During Catch Basin Chute Connection Pipe Installation

Sketch No. 4 - Utility Crossings During Catch Basin Chute Connection Pipe Installation (Extra Depth)

Sketch No. 5 - Gas Main Encroachment On And/Or Parallel To Excavation Of Unsheeted Trench

GAS COST SHARING WORK (SKETCH NO. 1)

SUPPORT REQUIREMENTS FOR GAS MAINS AND SERVICES CROSSING EXCAVATION GREATER THAN 4'-0" WIDE AT ANY ANGLE

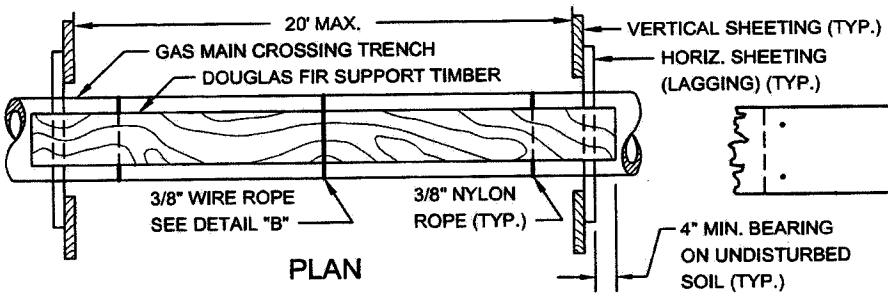

PLAN

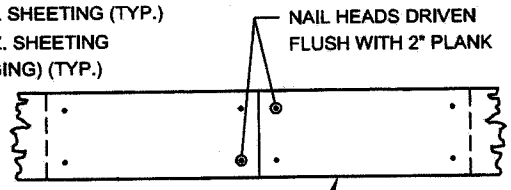

PLAN

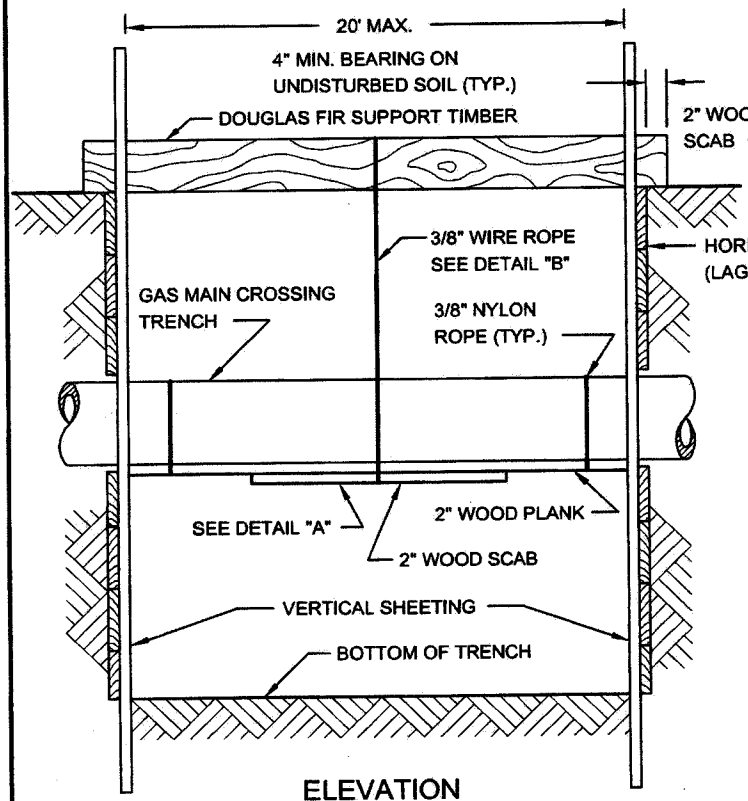

ELEVATION

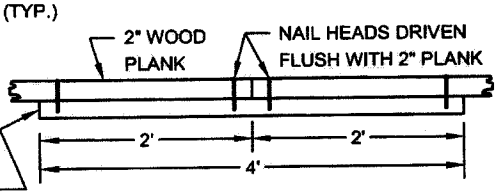

ELEVATION

DETAIL "A"

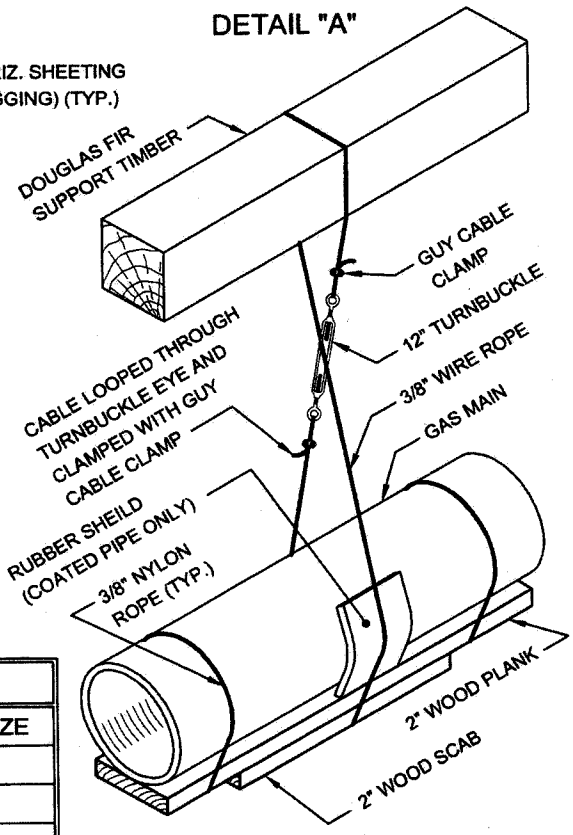

DETAIL "B"

CABLE SUPPORT		TIMBER SUPPORT	
MAIN TYPE	SPACING	MAIN SIZE	TIMBER SIZE
CAST IRON	4' O.C. MAX.	UP TO 6"	6" X 6"
STEEL	10' O.C. MAX.	8" TO 10"	8" X 8"
PLASTIC	10' O.C. MAX.	12" TO 16"	10" X 10"

REVISED OCT. 2004 - L. ADRIEN
REVISED JUNE 1998 - J. WONG / W. PATALANO/P. MOY

GAS COST SHARING WORK (SKETCH NO. 1A)

SUPPORT REQUIREMENTS FOR GAS MAINS OVER 16" DIAMETER UP TO AND INCLUDING 48" DIAMETER CROSSING EXCAVATION AT ANY ANGLE

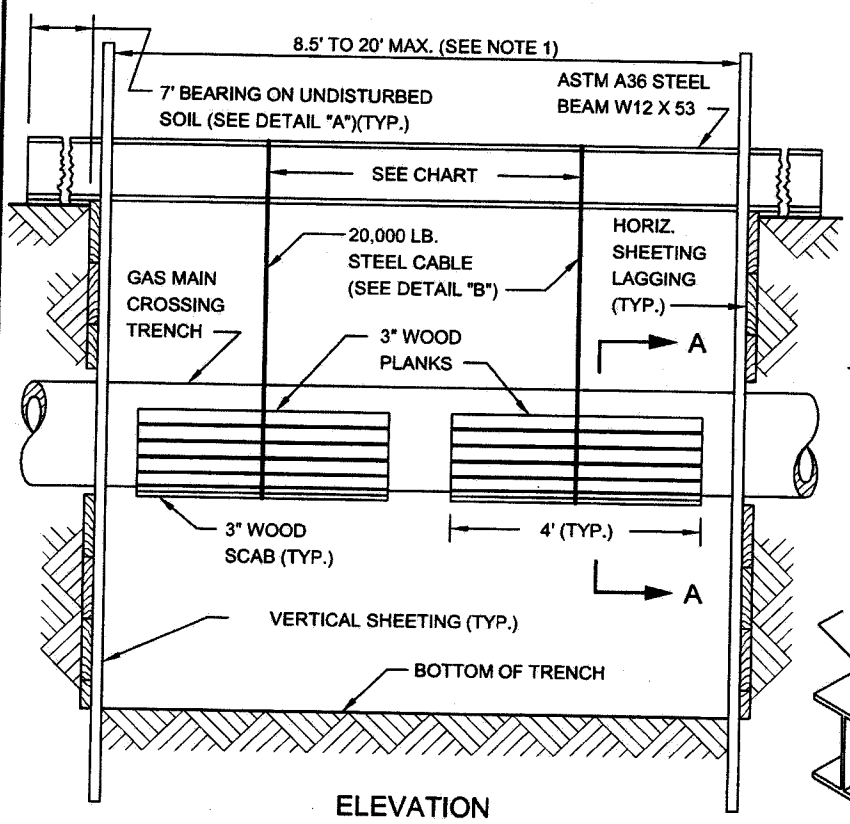

ELEVATION

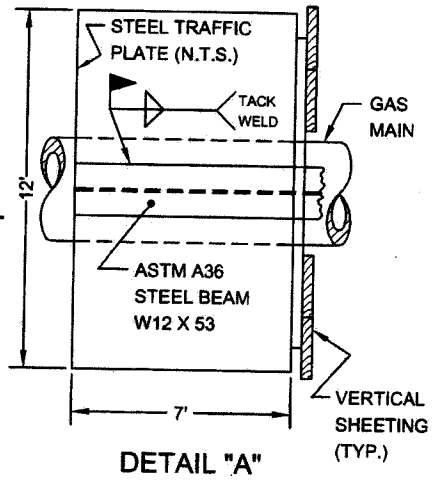

DETAIL "A"

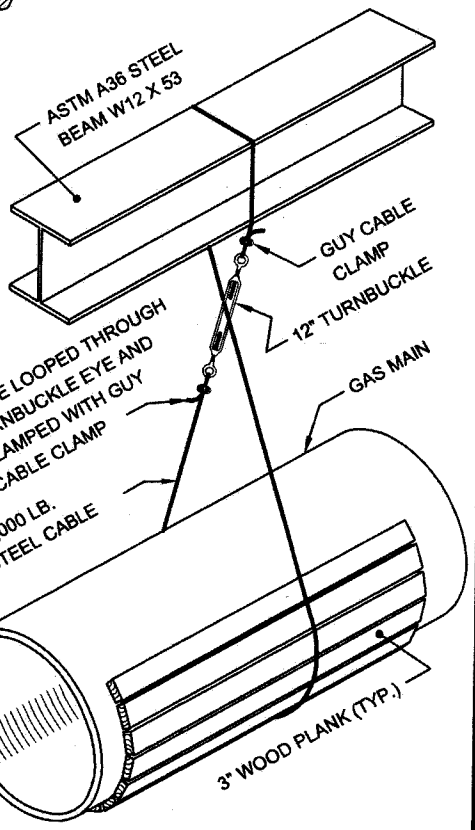

DETAIL "B"

CABLE SUPPORT	
MAIN TYPE	SPACING
CAST IRON	4' O.C. MAX.
STEEL	10' O.C. MAX.

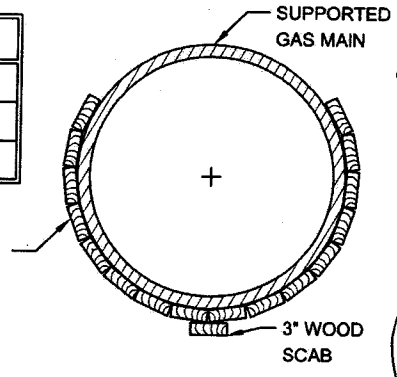

SECTION A-A

NOTES:

(1) NO SUPPORT IS REQUIRED FOR GAS MAINS OVER 16" DIA. UP TO AND INCLUDING 48" DIA. CROSSING TRENCHES LESS THAN 8.5' WIDE.

(2) UNDERMINE A MAXIMUM OF 8.5 L.F. OF CAST IRON GAS MAIN AT A TIME.

(3) SET STEEL CABLE OVER 3" WOOD PROTECTIVE PLANKS AND PLACE AN ADDITIONAL 3" SCAB ON THE BOTTOM OF THE GAS MAIN.

(4) ADJUST STEEL CABLE UNTIL DEAD WEIGHT OF THE UNDERMINED GAS MAIN HAS BEEN TAKEN UP BY THE OVERHEAD STEEL BEAM SUPPORT.

(5) ALL SUPPORTS AND STEEL CABLES CAN BE REOMVED ONLY AFTER THE REQUIRED BACKFILL (AROUND AND BELOW GAS MAIN) HAS BEEN COMPACTED IN ACCORDANCE WITH NEW YORK CITY STANDARDS AND AT THE DIRECTIONS OF THE ENGINEER.

REVISED OCT. 2004 - I. ADRIEN
REVISED JUNE 1998 - J. WONG / W. PATALANO/P. MOY

GAS COST SHARING WORK (SKETCH NO. 2)

TYPICAL METHODS OF MEASUREMENT FOR GAS CROSSINGS

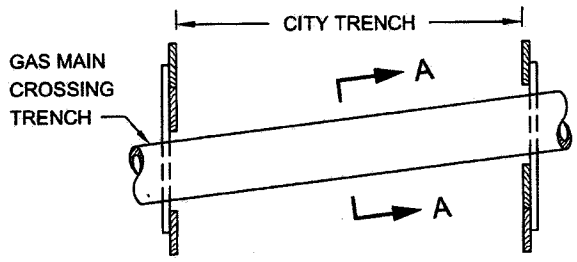

SINGLE FACILITY CROSSING

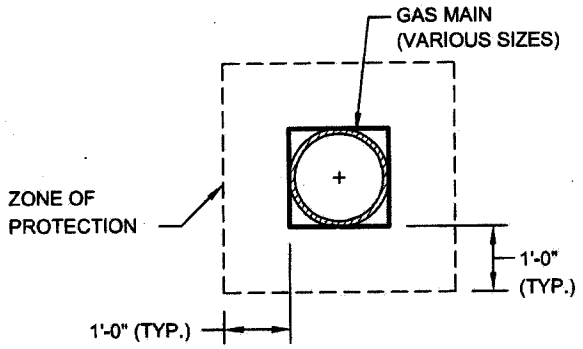

SECTION A-A

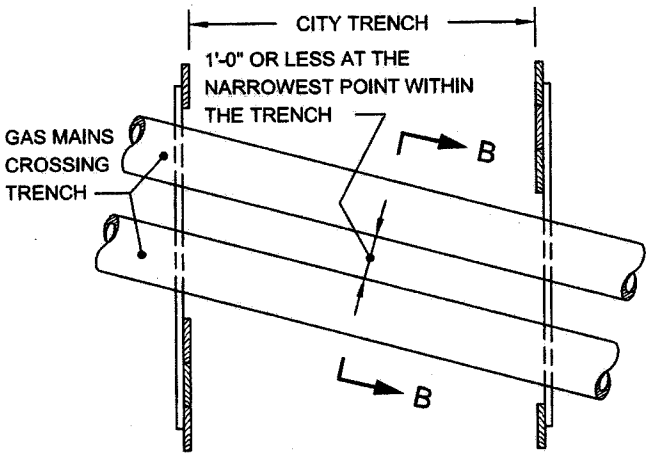

MULTIPLE FACILITIES
(GAS MAINS AT SAME ELEVATION)

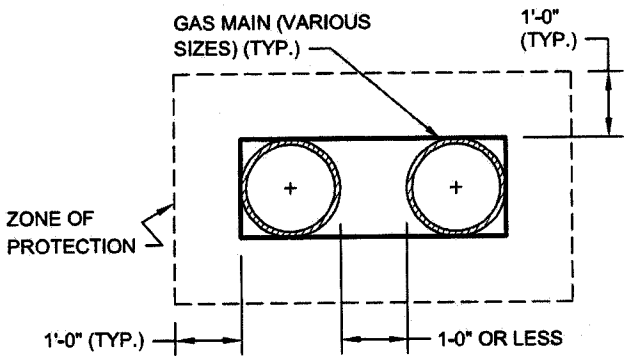

SECTION B-B

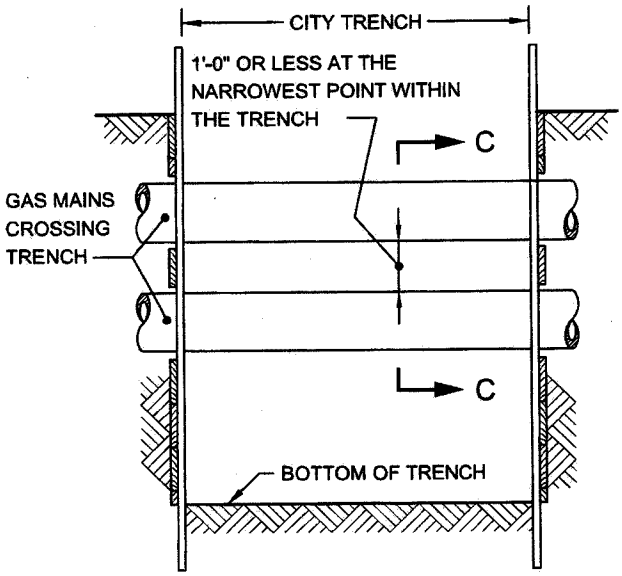

MULTIPLE FACILITIES
(ONE CROSSING AT DIFFERENT ELEVATIONS)

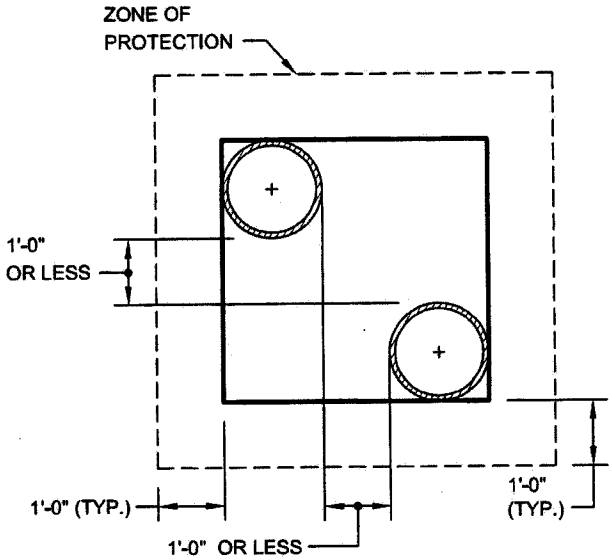

SECTION C-C

NOTE:

GAS MAINS MAY OR MAY NOT BE PARALLEL TO EACH OTHER.

REVISED SEPT. 2004 - J. ADRIEN
REVISED SEPT. 2004 - J. WONG/W. PATALANO/P. MOY

GAS COST SHARING WORK (SKETCH NO. 3)

UTILITY CROSSINGS DURING CATCH BASIN CHUTE CONNECTION PIPE INSTALLATION

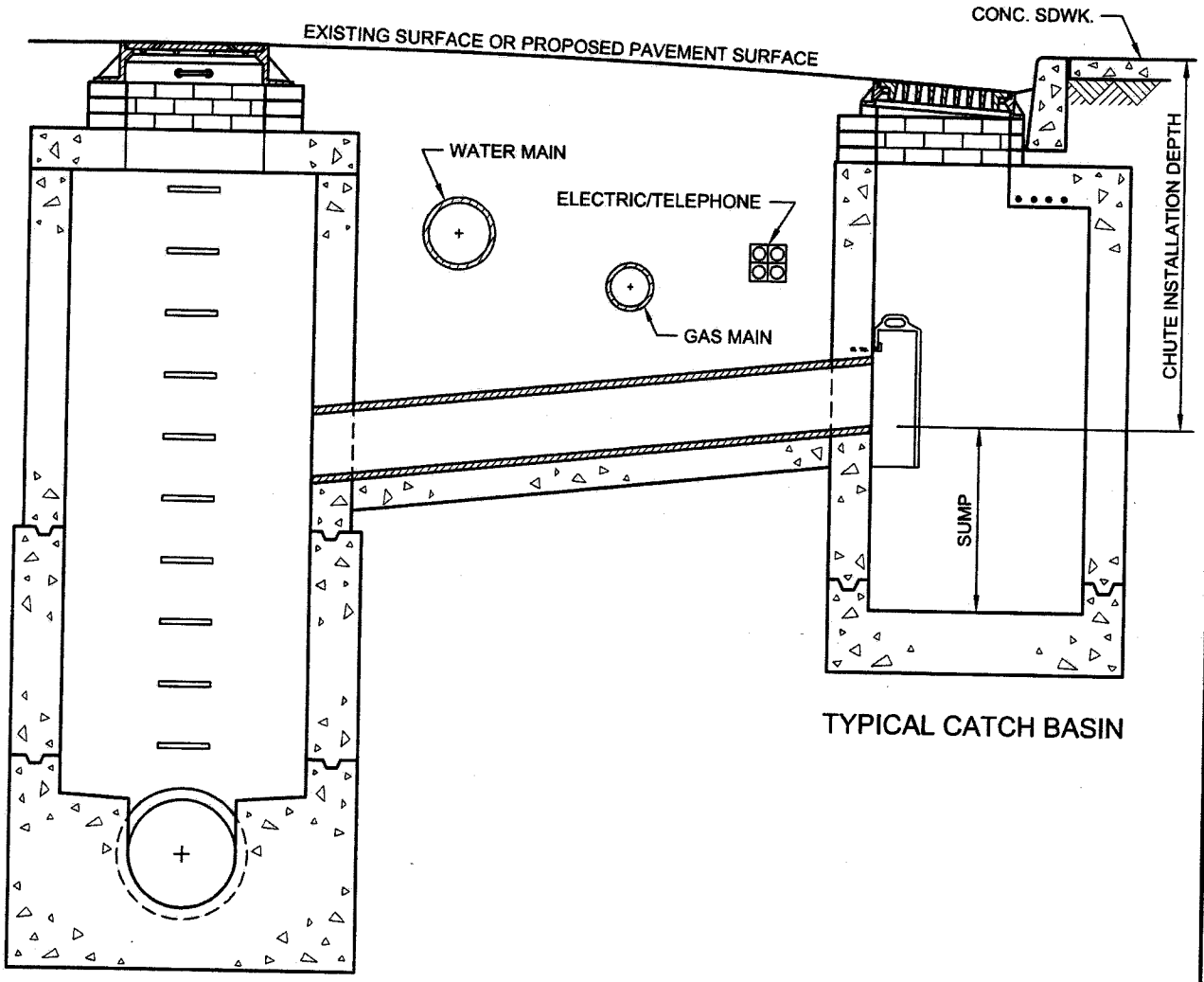

TYPICAL CATCH BASIN

TYPICAL SEWER MANHOLE

REVISED OCT. 2004 - I. ADRIEN
REVISED OCT. 1998 - J. WONG/W. PATALANO/P. MOY

GAS COST SHARING WORK (SKETCH NO. 4)

UTILITY CROSSINGS DURING CATCH BASIN CHUTE CONNECTION PIPE INSTALLATION (EXTRA DEPTH)

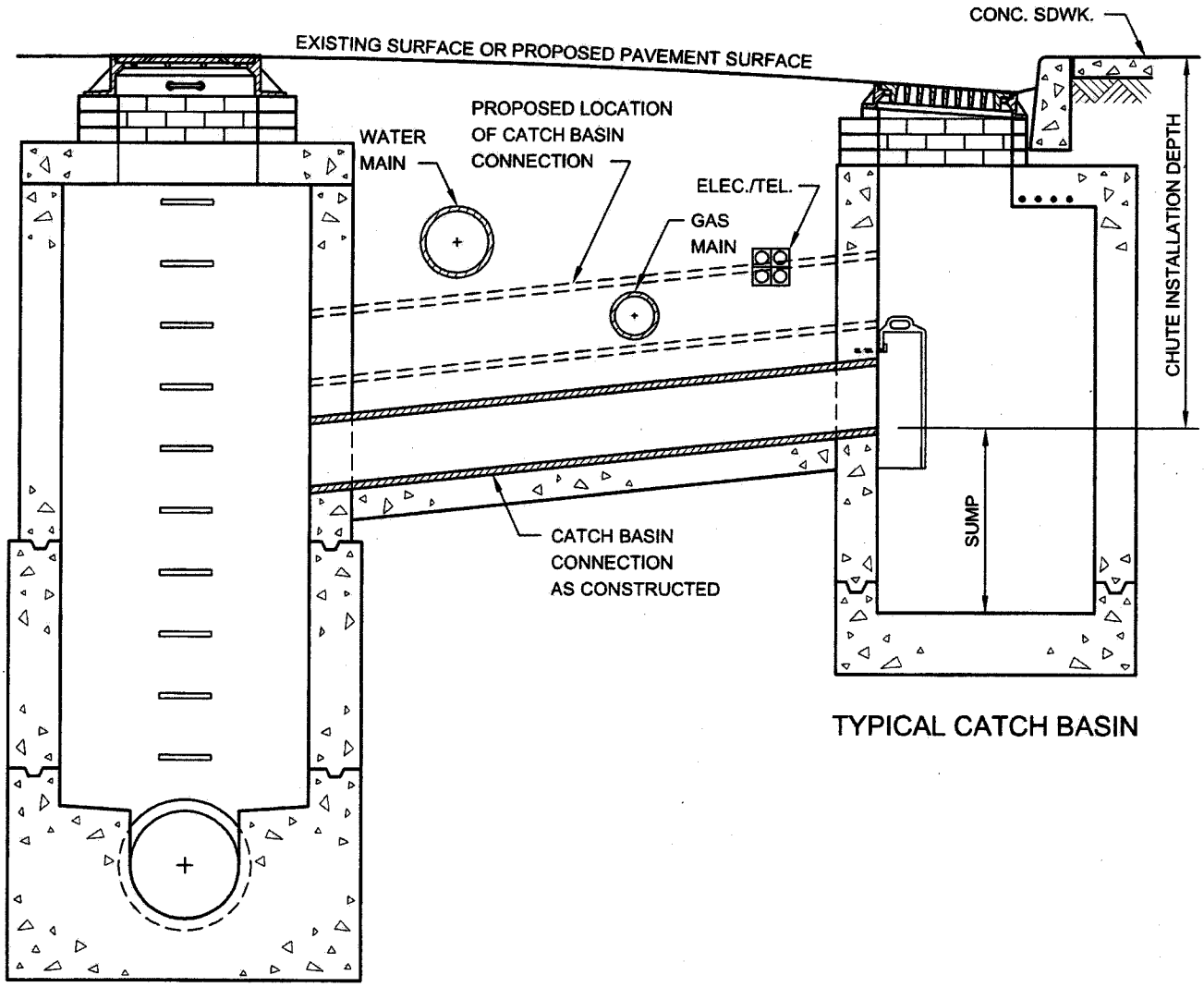

TYPICAL CATCH BASIN

TYPICAL SEWER MANHOLE

REVISED OCT. 2004 - J. ADRIEN
REVISED OCT. 1998 - J. WONG/W. PATALANO/P. MOY

GAS COST SHARING WORK (SKETCH NO. 5)

GAS MAIN ENCROACHMENT ON AND/OR PARALLEL TO EXCAVATION OF UNSHEETED TRENCH

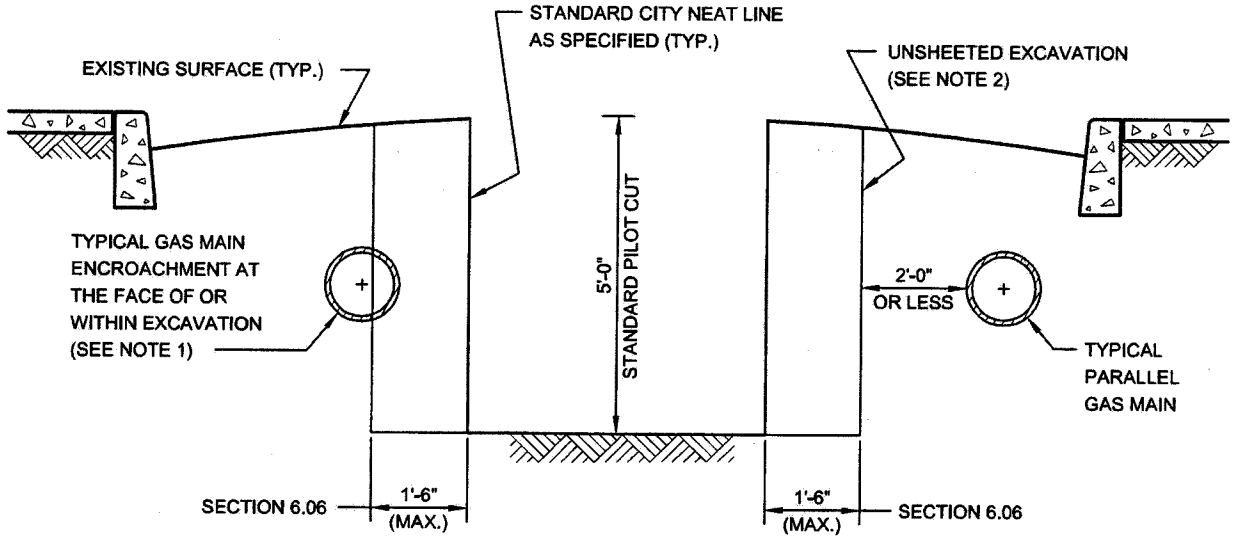

NOTES:

(1) GAS MAIN LOCATED AS SHOWN MAY HAVE TO BE REMOVED BY THE FACILITY OPERATOR PRIOR TO THE START OF CITY EXCAVATION, OTHERWISE, THE CONTRACTOR WILL BE PAID UNDER SECTION 6.06 FOR THE SAID WORK. IF GAS MAIN IS ABANDONED THEN SECTION 6.03 SHALL APPLY.

(2) EIGHTEEN (18) INCHES FROM STANDARD NEAT LINE IS THE MAXIMUM ALLOWABLE WIDTH OF AREA THAT MAY BE DISTURBED OR EXCAVATED DURING INSTALLATION OF CERTAIN TYPES OF SHEETING SYSTEMS THAT MEET THE REQUIREMENTS OF THE STANDARD SPECIFICATIONS OF THE DEPARTMENT OF DESIGN AND CONSTRUCTION OF THE CITY OF NEW YORK.

REVISED OCT. 2004 - L. ADRIEN
REVISED OCT. 1998 - J. WONG/W. PATALANO/P. MOY

V - PRELIMINARY GAS WORK TO BE PERFORMED BY FACILITY OPERATOR.

APPLICABLE TO ALL GAS DRAWINGS:

- ALL RELOCATION WORK SHOWN IN THIS SECTION IS TO BE PERFORMED BY FACILITY OPERATOR.
- ALL SUPPORT AND PROTECTION WORK TO BE PERFORMED BY CITY CONTRACTOR
- IF ADDITIONAL INFORMATION IS NEEDED REGARDING THE FACILITY OPERATOR'S RELOCATION WORK, THE CONTRACTOR IS ADVISED TO CONTACT THE GAS COMPANY REPRESENTATIVE:

Ms. Theresa Kong
Con Edison Company
4 Irving Pl., 12th Floor
New York, NY 10003
Tel: (212) 460-4834

(NO TEXT IN THIS AREA, TURN PAGE)

GAS FACILITY COST ALLOCATION AGREEMENT
PROJECT : QED 1014

CAPITAL GAS MAIN INSTALLATION

SHEET #	LOC.	ON STREET	FROM	TO	ITEM	SIZE	TYPE	LENGTH	REIMB LENGTH	REMARKS
1	B-C	31ST AVE	W/S 41ST	F/O 40-18 31ST AVE	67.2b	6	PE	42' +/-	42' +/-	RETIRE 42'+/- 6" PE
1	A-B	31ST AVE	W/S 41ST	F/O 40-16 31ST AVE	82k	12	PE	115'+/-	115+/-	
1	D-F	41ST	N/S 31ST AVE	F/O 30-99 41ST ST	67.2c	8	PE	30' +/-	30' +/-	RETIRE 30'+/- 8" PE
1	E-F	41ST	N/S 31ST AVE	F/O 30-99 41ST ST	82i	8	PE	45' +/-	45' +/-	
2	G-L	28TH AVE	F/O 41-01 28TH AVE	F/O 40-15 28TH AVE	67.2b	6	PE	135' +/-	135' +/-	RETIRE 135'+/- 6" PE
2	G-L	28TH AVE	F/O 41-01 28TH AVE	F/O 40-15 28TH AVE	82h	6	PE	180' +/-	180' +/-	
2	I - J	I/O 28 AV & 41 ST	I/O 28 AV & 41 ST	I/O 28 AV & 41 ST	67.2b	6	PE	90' +/-	90' +/-	RETIRE 135'+/- 6" PE
2	I - K	I/O 28 AV & 41 ST	I/O 28 AV & 41 ST	I/O 28 AV & 41 ST	82h	6	PE	90' +/-	90' +/-	
3	M-N	41TH ST	F/O 30-08 41TH ST	F/O 30-08 41TH ST	67.2b	6	CI	65' +/-	65' +/-	RETIRE 65'+/- 6" CI
3	M-N	41TH ST	F/O 30-08 41TH ST	F/O 30-08 41TH ST	82h	6	PE	65' +/-	65' +/-	

EP7-27A

POINTS	PIPE REMOVAL	LENGTH
B - C	6" L.P. PE(B) 1993	±42'
D - F	8" L.P. PE(B) 1993	±30'

POINTS	PIPE INSTALLATION	LENGTH
A - B	12" L.P. PE	±115'
E - F	8" L.P. PE	±45'

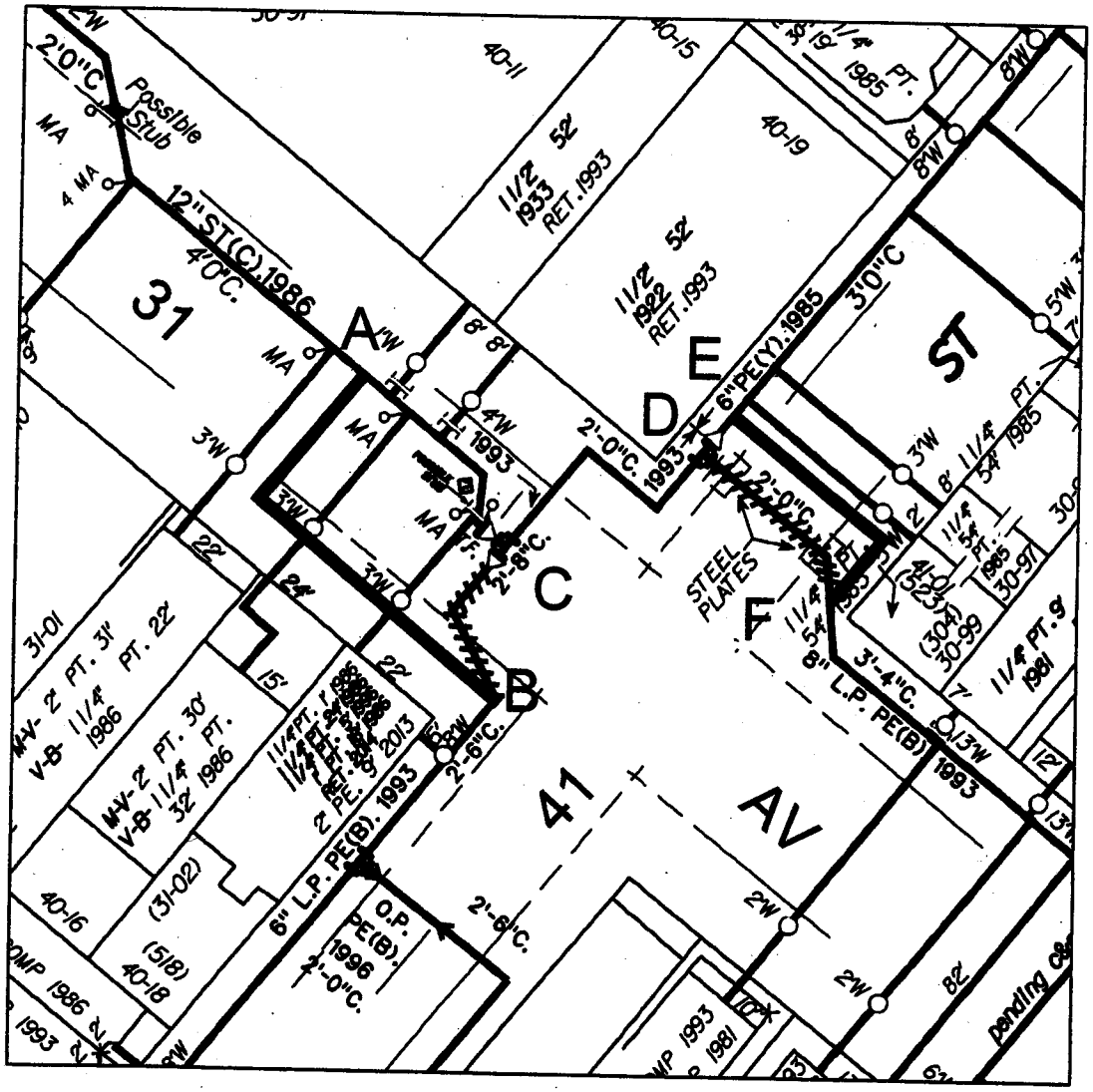

LOCATION 1: 31ST AVENUE AND 41ST STREET

PLATE # 66-AD

GAS MAINS AND SERVICE PLATE EPT-27B

CONSOLIDATED EDISON CO. OF NEW YORK, INC.

SHEET 1 OF 2

Project: QED1014

POINTS	SPAN	PIPE REMOVAL	LENGTH
G - L	1	6" PE(Y) .1985	±135'
H - J		6" C.I. 1930	±30'

POINTS	SPAN	PIPE INSTALLATION	LENGTH
G - L	2	6" L.P. PE	±180'
I - K		6" L.P. PE	±30'

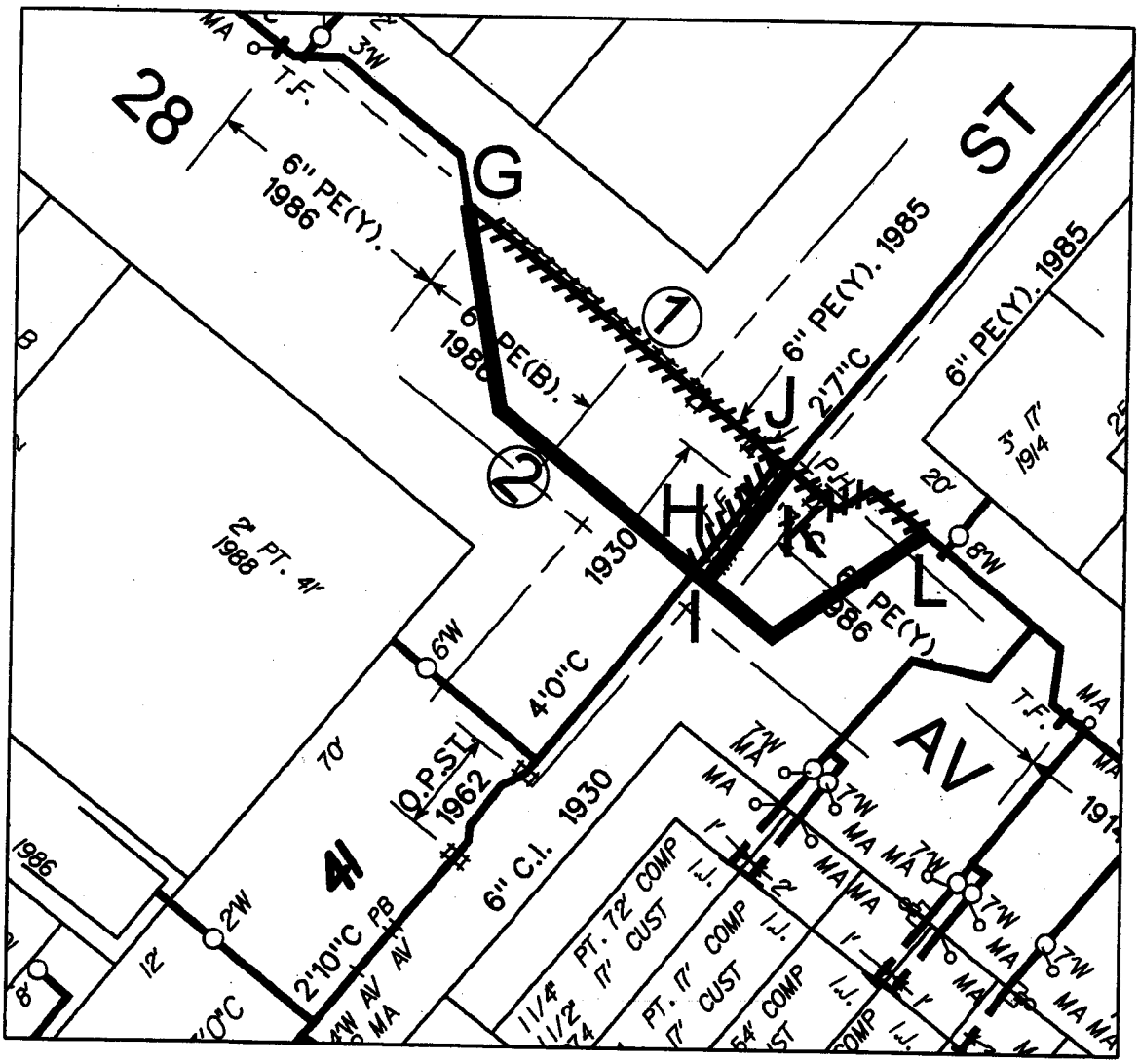

LOCATION 2: 28TH AVENUE AND E41ST STREET
PLATE # 68–AE

GAS MAINS AND SERVICE PLATE EPT-27C
CONSOLIDATED EDISON CO. OF NEW YORK, INC.

SHEET 2 OF 2
Project: QED1014

POINTS	SPAN	PIPE REMOVAL	LENGTH
M - N	1	6" C.I. 1913	±65'

POINTS	SPAN	PIPE INSTALLATION	LENGTH
M - N	2	6" L.P. PE	±65'

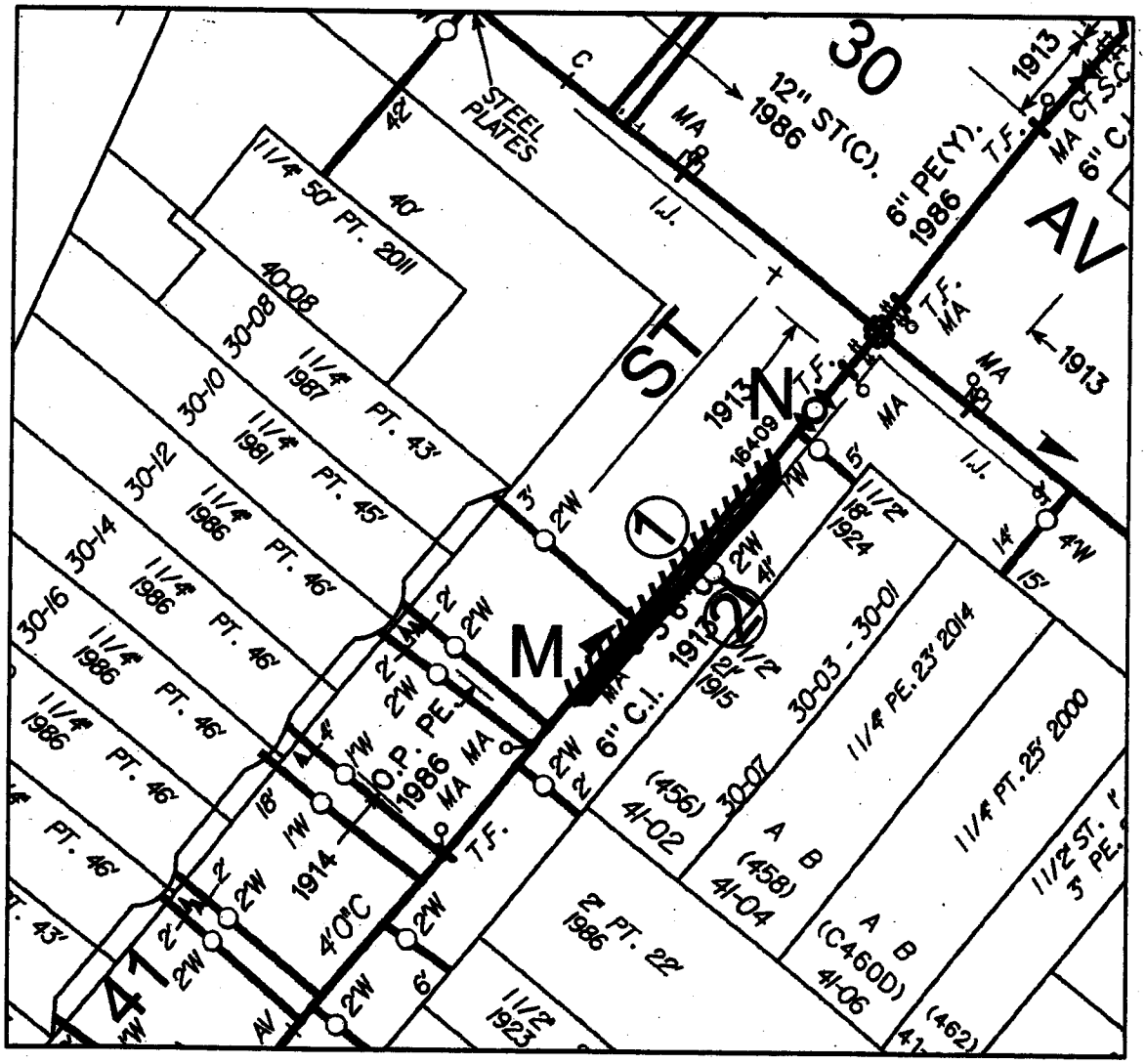

LOCATION 3: 41ST STREET, S 30TH AVENUE

PLATE # 67–AE

GAS MAINS AND SERVICE PLATE EPT-27D

CONSOLIDATED EDISON CO. OF NEW YORK, INC.

SHEET 3 OF 3

Project: QED1014

VI - LISTING OF APPROXIMATE LOCATIONS OF EP-7 BID ITEMS QUANTITIES.

(NO TEXT IN THIS AREA, TURN PAGE)

SCOPE OF WORK
SUPPORT AND PROTECTION
FOR CONTRACT QED-1014

The City of New York Department of Design and Construction is proposing to install sewers and/or water mains and all appurtenances in various locations in The City of New York along with all work incidental thereto.

6.01.1 - Gas Main Crossing Sewer Up To 24" In Diameter. (Ea.)

1 in Crescent St Bet 31 Dr & 31Rd.
1 in 31 Ave & 33 St.
1 in 31 Ave & 34 St.
1 in 31 Ave & 31 St.

6.01.8 - Gas Services Crossing Trenches And / Or Excavations. (Ea.)

5 in Various Locations as Required.

6.01.12 - Gas Main Crossing Water Main 48" Thru 54" In Diameter. (Ea.)

1 in Crescent St & 31 Rd.
1 in 31 Ave Bet Crescent St & 29 St.
1 in 31 Ave & 30 St.
1 in 31 Ave & 32 St.
1 in 31 Ave & 35 St.
1 in 41 St Bet 25 Ave & 28 Ave.

6.02 - Extra Excavation For The Installation Of Catch Basin Sewer Drain Pipes With Gas Interferences. (Ea.)

4 in Various Locations as Required.

6.03 - Removal Of Abandoned Gas Facilities. All Sizes. (L.F.)

370 in Various Locations as Required.

SCOPE OF WORK
SUPPORT AND PROTECTION
FOR CONTRACT QED-1014

The City of New York Department of Design and Construction is proposing to install sewers and/or water mains and all appurtenances in various locations in The City of New York along with all work incidental thereto.

6.03.1a - Removal Of Abandoned Gas Facilities With Possible Coal Tar Wrap. All Sizes.(L.F.)
(For Con Edison Work Only)

50 in Various Locations as Required.

6.04 - Adjust Hardware To Grade Using Spacer Rings/Adaptors (Street Repaving). (Ea.)

5 in Various Locations as Required.

6.05 - Adjust Hardware To Grade By Resetting (Road Reconstruction). (Ea.)

5 in Various Locations as Required.

6.06 - Special Care Excavation And Backfilling. (C.Y.)

100 in various locations as required, including but not limited to all gas services crossing unsheeted water main trenches.

6.07 - Test Pits For Gas Facilities. (C.Y.)

40 in Various Locations as Required.

End of Section

This section consists of forty (40) pages.

SECTION U (VERSION 2.0)

NOTICE

THE PAGES CONTAINED IN THIS SECTION U VERSION 2.0 (U-PAGES) REPRESENT ADDITIONAL CONTRACT REQUIREMENTS APPLYING TO WORK PERFORMED IN THE PRESENCE OF PRIVATELY OWNED UTILITY FACILITITIES.

(NO TEXT ON THIS PAGE)

SECTION U VERSION 2.0

DATED: March 9, 2015

1. The Contractor shall be responsible for compliance with all the provisions of the following Sections and Schedules, which are hereby made a part of the original contract documents:

   A. "SECTION U: Additional Contract Requirements Applying to Work Performed in the Presence of Privately Owned Utility Facilities" (Pages U-3 through U-13)

   B. Schedule U-1 (Page U-14)

   C. Schedules U-2 listing scope of utility interferences is no longer included in City contract. Such information will be part of Interference Agreement between Utility Operator and Contractor.

   D. Section U-3 Page U-15 (as per the Private Utilities reference document for SECTION U called "CET SPECIFICATIONS AND SKETCHES", dated November 2010).

2. Each facility operator shall provide inspectors at the work site to inspect methods of interference work, verify quantities and items of Utility Work, and coordinate all phases of the facility operator operations.

3. In addition, the following statements are made to provide clarification of various paragraphs under Section U:

   A. Section U, ¶3, requires the Contractor to immediately commence negotiations with each Company for an Interference Agreement under which the Company will compensate the Contractor for any Interference Work which the Company does not elect to perform with its own forces or by specialty contractors retained by the Company. Thus the Contractor is on notice that its work under the Contract may be affected by Interference Work performed by (a) the Contractor pursuant to a separate Interference Agreement with the Company, (b) the Company, or (c) partly by each.

   B. The City has no contract with any of the Companies for work on or adjacent to the site of work under this Contract, and the Companies are not "Other Contractors" as defined for the purposes of this Contract. The Contractor is reminded, however, that pursuant to Section U, ¶3, the City will not compensate the Contractor for any direct and/or indirect costs related to Interference Work, regardless of whether such Interference Work is covered by an Interference Agreement between the Contractor and the Company or is performed by the

Company using its own forces or by specialty contractors retained by the Company.

C. Section U, ¶13, provides that the provisions of Section U are material provisions of the Contract and that the Contractor's failure to comply with the procedures set forth in Section U are sufficient for the Commissioner to declare the Contractor in default pursuant to Article 48 of the Contract.

Pursuant to this Amendment, the Contractor is informed that the Performance Bond required of the Contractor pursuant to the Contract is not deemed to guarantee performance of any of the Interference Work.

Section U: Additional Contract Requirements Applicable to Work Performed in the Presence of Privately Owned Utility Facilities

The Contractor is hereby notified that pursuant to the law and franchise agreements issued by the City, certain private utility and public service companies named in Schedule U-1 ("the Companies") own and/or operate surface and/or subsurface facilities within the limits of this contract. The existence of these facilities impacts the productivity of the City work called for in the contract. In order to improve coordination of the City construction with the private utility facilities owned and/or operated by the Companies named in Schedule U-1, Article 1.06.30 of the Standard Highway Specifications of the New York City Department of Transportation, Dated August 1, 2015; and/or Articles 10.15 through 10.18 of the Standard Sewer and Water Main Specifications of the New York City Department of Environmental Protection, Dated July 1, 2014; as applicable, are amended and will be implemented as follows:

1. Means and methods for City work:

a) The Contractor is hereby notified that the utility interferences may impact the performance of, and/or interferes with, City work. The contractor will be required to perform such utility work as directed by the Resident Engineer in order to clear all utility interferences from the project site as required for satisfactory completion of City work within specified contract schedule.

b) In areas serviced by overhead electric system, the contractor understands and by bidding for this contract agrees that he/she will be required to perform the public work in the presence of energized electrical overhead lines and appurtenances located in areas adjacent and/or within the project area. As a consequence he/she will select means and method of construction appropriate to maintain the safety clearances required or as permitted by electric operators in order to avoid damaging the insulation or shielding of these lines and also to prevent knocking them down.

2. Field inspection prior to construction:

Prior to the start of any contract work in areas serviced by overhead electric lines, and after the award to the apparent low bidder for this contract, the contractor must request a field walk of the project area along with the operator of the overhead electrical facilities and the DDC

Engineer-In-Charge. At that time the facility operator will confirm the type and condition of the overhead electrical lines and the sufficiency of their insulating properties with respect to the means and methods proposed by the contractor. The contractor must be prepared to describe in enough details his/her proposed means and methods of construction operations in order to anticipate the likelihood that electric lines insulation would be cut or otherwise compromised. Also such details will allow the facility operator to anticipate the need for added insulation and/or shielding of non-insulated lines.

3. Compensation for interference work:

Compensation for Interference Work is a matter of adjustment between the Contractor and each private utility company located within the limits of the project area and whose utility facilities are affected by City contract work. In particular, the City will not compensate the Contractor for any direct and/or indirect costs related to Interference Work, including, but not limited to, lost profit, increased overhead, or any other impact costs. Upon receipt of a Notice of Award from the City, the Contractor shall immediately commence negotiations with each of the Companies concerning the manner in which and the price for which the Contractor, through its own forces or by others hired by it, will perform and be paid by the Company for all necessary Interference Work as defined above, and at known locations of City contract work, that the Company(ies) choose(s) not to perform with its(their) own forces or by specialty Contractors hired by it (them) (as per "Interference Agreement"). (Specialty contractors' work is limited to (i) insulation installation and removal, (ii) live gas and steam work, (iii) cleanup and disposal of hazardous materials, (iv) splicing live electrical and telecommunications facilities, and (v) work not traditionally performed by general construction contractors.

4. Interference Agreement:

1. Although the parties may negotiate an Interference Agreement in any format or manner they deem fit, the Contractor is hereby advised that the Companies have indicated to the City that they will agree to compensate the Contractor on a unit price basis for Types of Interferences encountered on this Contract in accordance to the Private Utilities reference document for SECTION U called "CET SPECIFICATIONS AND SKETCHES", dated November 2010, copy of which is available on demand.

2. The Contractor shall notify the City upon concluding an Interference Agreement with each of the Companies.

5. *City contract work to continue without Interference Agreement :*

If, prior to the start of construction, as directed by the City's Order to work / Notice To Proceed (OTW/ NTP) date any of the Companies and the Contractor have not concluded an Interference Agreement as described above, then the City shall issue a written "48 Hours notice to Public Corporation" as prescribed by the City of New York Administrative Code", commonly referred to as "Order-Outs" and City construction will proceed as ordered and the Contractor will be directed by the Resident Engineer to perform the City work on Time, Material and Equipment basis (T&M) as specified in standard City contract agreement Article 26.2. T&M records will include identification of types of utility facilities interfering with City work, utility facility owners, specifying the nature and quantity of any materials, plant and equipment furnished or used in connection with the performance of such work and crew size, such as: name and number of each worker employed on such work. T&M records will also indicate the hours of active time, standby time and idle time. The Company (ies) and the Contractor will maintain separate records of the actual quantity and cost of labor, materials, and equipment expended, and will provide copies of this information to the other party on a daily basis for reconciliation. These T&M records along with cost evaluations will be submitted daily to the Resident Engineer for review and approval. The total cost of City work will be based on quantity of work performed multiplied by unit price contract bid items. The total interference cost will be calculated as the difference between the total T&M cost and total cost for City work. The Resident Engineer will conduct a monthly reconciliation session of the daily T&M records with the affected Company (ies) and contractor. If the contractor and affected utility companies cannot reconcile their T&M records, by the last day of each month, then the Resident Engineer will submit the approved City's T&M records along with total cost evaluations to the DDC Director of Construction who will review these records and recommend approval and validity certification by the DDC Deputy Commissioner.

1. Copies of the DDC approved and certified T&M records will then be transmitted by the DDC to the contractor and the utility companies. These certified records may be used by the contractor for compensation claims against the responsible private facility

owners, or may be used by any party as supporting documentation in dispute regarding compensation for performing Interference Work. The contractor will be required to perform City work while invoices are submitted by the contractor to the Utility companies for payment within 30 days, or while compensation disputes between contractor and affected company (ies) are submitted to Binding Arbitration process described in Paragraph 9.

2. All issues related to utility work and/ or delays due to compensation disputes or claims against utility companies are not allowable as justification for granting contract time extensions or delay claims against the City. The City may assess liquidated damages specified in the contract for net overall delays suffered by City contract work as a result of utility issues, disputes and claims.
3. The standard City contract dispute resolution process specified in Article 27 "Presentation of disputes to Commissioner", of the standard City contract agreement is not applicable to any disputes related to utility work and/ or compensation for such work or claim against utility companies. Utility work issues, disputes and claims may only be submitted to Binding Arbitration process described in Paragraph 9.
4. The contractor will notify the Resident Engineer when utility work that require the intervention of company utility specialty crews causes excessive contractor's labor and equipment standby or idleness and, thereby jeopardizing the City project schedule. The Resident Engineer will submit the facts to the DDC Director of construction who will recommend to the Deputy Commissioner regarding the issuance of a "48 hours notice" to the concerned utility company as authorized by the New York City administrative Code Section 19-143 and/ or Section 24-521 as applicable..
5. Utility delays caused by utility and/ or by unavailability of utility specialty crews cannot be discounted for earning any contractual bonus when such bonus clause is included in a contract. However, if such specified bonus is not earned or disallowed by the City or if the City assesses specified liquidated damages as a result of such excessive delays, the contractor may seek damages from the responsible utility company (ies).

6. *Extra utility work with Utility Agreement:*

If during construction the Contractor encounters utility facilities interferences or utility scope of work that it believes is not covered by the Interference Agreement as described above, then the Contractor shall immediately notify the Company in writing, with a copy to the City, describing the nature and location of the extra work in question. The Company then has five (5) business days to investigate the conditions and then:

1. Advise the Contractor and the City in writing that no interference with its facilities exists at the location in question, and hence that the Contractor may proceed with City work without providing for any impact from Company facilities;
2. Advise the Contractor and the City in writing that the Interference Agreement negotiated pursuant to Paragraph 4, provides for the scope of work encountered.
3. Advise the Contractor and the City in writing that it intends to perform the necessary utility Work with company forces or with its own contractor including, but not limited to, relocating its facility out of the way of the proposed City work. In this case, the Company shall provide a written schedule for the performance of the utility work it proposes to perform, which shall be subject to approval by the City based on its impact to the Contractor's currently approved progress schedule. Upon approval of the Company's schedule by the City, the Contractor shall provide access to the worksite to the Company and/or any contractors hired by it to perform this utility work. If necessary, the City may grant a contract time extension for delays caused by the performance of such utility work by the company.
4. Reasonably specify in writing the scope of work to be performed by the Contractor on behalf of the Company that is not covered under the Interference Agreement negotiated pursuant to Paragraph 5, including, but not limited to, relocating, supporting, and/or protecting the Company's facilities, and/or shifting the City facility if approved by the Resident Engineer, and/or otherwise changing its operations to work in the presence of the Company's facilities. Should the Company elect this option, it must adequately define and provide an initial price offer for the work required to be performed.

7. Means and Methods for utility work:

Upon receipt of the Company's determination pursuant to paragraphs 6.2, or 6.4, above, the Contractor shall determine reasonable means and methods of performing the work defined by the Company. These means and methods are subject to approval of the Company, which shall not be unreasonably withheld. If, however, the Company objects to the Contractor's proposed means and methods then it shall define an alternate method of construction. Upon receipt of the Company's approval or its proposed alternate method of construction, the Contractor shall commence performance of the work defined by the Company as soon as possible, and shall perform the work in a good, workmanlike, and efficient manner, using the means and methods approved by the Company, in order to permit the City work to proceed in the most expeditious manner possible, but without imposing unreasonable and/or unnecessary costs on the Company. It is expressly understood by all parties that the City's rights pursuant to Article 4 of the Contract apply to Utility Work performed pursuant to this section.

8. Disputed utility work covered by a utility agreement:

The City Work will continue as described in paragraph 5 above. In the event of any dispute between the Company (ies) and the Contractor regarding any issue related to the performance of, or payment for, utility work, including, but not limited to, any indirect or impact costs incurred by the Contractor due to the Utility Work and/or to the existence of facilities owned or operated by the Company (ies) on the line of the work. The Company (ies) and the Contractor hereby agree to submit to each other a "Final Offer," in writing, by certified mail. Each party shall then have three business days to consider each other's Final Offer. In the event that neither party accepts the other's Final Offer within those three days, the Company (ies) and the Contractor agree to immediately submit the dispute to binding arbitration as described in Paragraph 9. During the pendency of any arbitration, the Company (ies) and the Contractor shall maintain separate records of the actual quantity and cost of labor, materials, and equipment expended, and to provide copies of this information to the other party on a daily basis for reconciliation. Any and all disagreement with the records maintained and provided by the other, must be documented in writing to all parties. However, these records are solely for the benefit of presentation to the arbitrator, whose decision may not necessarily be based on these records and in any event is final. Both parties should be aware that the City will not

confirm or deny the accuracy of any records maintained by either party for Utility work performed pursuant to a Utility Agreement. While the arbitration is pending, the Company shall pay the Contractor on a monthly basis, based on the price offered by the Company to the Contractor for the performance of the work.

9. Arbitration of utility work:

The arbitration of the issues described above shall be conducted pursuant to the Construction Industry Arbitration Rules of the American Arbitration Association (hereinafter "the Rules" and "AAA") in effect on the date the arbitration is initiated except as set forth herein. The arbitration award shall be final and binding upon the parties to the arbitration and judgment upon the award may be entered in a court having jurisdiction.

(a) Once an arbitrator(s) has been appointed by the AAA, the arbitration shall be scheduled as promptly as possible given the arbitrator(s) and the parties' schedules.

(b) No later than seven days prior to the first arbitration hearing, Company and Contractor shall submit to the arbitrator(s), and to each other, a summary of each party's respective position and such other information as is deemed appropriate, along with a copy of each party's Final Offer as specified in paragraph 8.

(c) The arbitration shall be conducted and concluded in two days.

(d) On the morning of the first day of the arbitration, Contractor and/or representatives shall have 3 ½ hrs to make a presentation of its claim to the arbitrator. During its presentation, Contractor shall not be permitted to produce any documents or cost records which have not already been provided to the Company. Contractor shall be permitted to produce any analysis or description of its claim which has been prepared for the purpose of its presentation.

(e) After lunch, Company and/or its representatives shall have two hours to ask Contractor questions about its claim and its presentation. Thereafter the arbitrator(s) shall have two hours to ask Contractor questions about its claim and its presentation.

(f) On the morning of the second day of the arbitration, Company and/or its representatives shall have 3 ½ hours to make a presentation of its claim to the arbitrator. During its presentation, the Company shall not be permitted to produce any documents or cost records which have not already been provided to the Contractor. The Company shall be

permitted to produce any analysis or description of its claim which has been prepared for the purpose of its presentation.

(g) After lunch, Contractor and/or its representatives shall have two hours to ask Company questions about its claim and its presentation. Thereafter the arbitrator(s) shall have two hours to ask Company questions about its claim and its presentation.

(h) Subject to the above time limitations, the arbitrator(s) may conduct the arbitration in such manner as the arbitrator(s) deems reasonable.

(i) The arbitrator(s) shall then have one week to select in writing, as the arbitrator ('s) award, that party's Final Offer which appears to be more reasonable, based on the presentations at the arbitration hearings.

(j) The arbitrator shall have no discretion to grant an award other than one of the two Final Offers submitted by the parties.

(k) Any award for work that has already been performed shall be paid on the 7th day after receipt of the arbitrator's decision, or on the 30th day after completion of the work, whichever is later. Payment for work not yet completed at the time of the arbitrator's decision shall be paid within 30 days of completion of work. Interest shall accrue from the date payment is due at the rate of 9% per annum. Either party may cause judgment to be entered in accordance with the arbitrator(s) decision in a court in the State of New York, County of New York.

(l) The arbitrator's fees and any other costs of the arbitration shall be initially shared equally by Company and Contractor. The non-prevailing party shall then pay all arbitrator's fees and costs of the arbitration and shall reimburse the prevailing party for its share of such fees and costs theretofore paid.

(m) The parties may, at any time, settle any matter submitted to arbitration.

10. Order-out waiver:

The Contractor and all subcontractors hired by it, if an Interference Agreement is executed as specified between the concerned parties, agree to waive any rights they may have, if any, under law, contract or otherwise to compel the City to assert any right the City may have, including the issuance of any directives required under the New York City Administrative Code, Section 19-143 and Section 24-521, to require any or all of the Companies to maintain, repair, replace, protect, support, shift, alter, relocate, and/or remove utility facilities in connection with the

work to be performed under this contract. However, nothing in this section shall preclude the City from exercising its rights under the Law to issue such a directive to the Company.

11. Cost of insurance:

Each of the named Companies, at their option and if an Interference Agreement is executed as specified between the concerned parties, may be named as an additional insured on all insurance policies required to be maintained under this contract. In the event that a Company opts to be so named as an additional insured, the actual incremental cost, if any, to the Contractor of providing such insurance coverage shall be borne by that Company. The Contractor shall provide a written statement from its insurance provider documenting the actual cost of this added coverage to the Company. Under no circumstances shall the cost of insurance coverage on behalf of any Company be borne by the City. Nothing in this paragraph shall be interpreted to imply the City's acceptance of any additional responsibility or liability for any matter related to the performance of Utility Work. In particular, the Company and the Contractor bear joint and full responsibility to ensure that any Utility Work performed by the Contractor is in compliance with all applicable government and Company regulations.

12. Cost of utility interference work:

The Companies, by virtue of a prior agreement with the City, have agreed to perform their obligations described in this section. It is expressly understood that the cost of Utility Work or any delays cost cause by such utility work shall not be a charge against the City, but shall be a matter for adjustment between the Contractor and the Company or Companies concerned. The City and the Contractor agree that the Companies are third party beneficiaries of this section of the contract, if a Utility Agreement is executed between the contractor and utility company (ies). The provisions of this section shall govern in all cases where Company property interferes with or is about to be disturbed by the City work, notwithstanding any other provision of the Contract, except for Natural Gas transmission/distribution facilities covered subject to the Gas Facility Cost Allocation Act (GFCAA) and covered separately in this contract.

13. Default declaration:

The Contractor agrees that the provisions of this section are material provisions of the contract, and that the Contractor's failure to comply with the procedures set forth above are sufficient

for the Commissioner to declare the Contractor in default pursuant to Article 48 of the Contract.

14. NYS Labor Law:

The Contractor is hereby advised that New York State Labor Law applies to public work. The work described in this Section U of the contract performed by utility company (ies) with their own forces or vendors hired by such company (ies) is not public work.

15. Facility operators:

The insurance requirements in Paragraph 11 of this Section U apply to: (i) additional Companies, if any, who were not named in Schedule "A" but which have executed a Utility Agreement with the contractor for utility work; and (ii) additional coverage, if any, paid for by Utility Companies whose utility facilities are located within the project limits, that they may require for the utility work pursuant to an utility agreement between the contractor and such utility companies.

[End]

"STANDARD UTILITY LETTER OF AGREEMENT"

(Name)
Deputy Commissioner, Infrastructure Division
Department of Design and Construction
30-30 Thomson Avenue
Long Island City, NY 11101

RE: City Work Performed in the Presence of Private Utility Facilities
Project No: _____

Dear (Name):

This letter is to certify that _____, has requested the inclusion of the attached "Section U: Additional contract requirements applying to work performed in the presence of privately owned utility." The company agrees to abide by the terms of this Section U at the company's own expenses due to their facilities interferences with the Public work.

Sincerely,

_____
By: Authorized Company Representative

_____
Title

NOTARY PUBLIC

CERTIFIED AS TO FORM
AND LEGAL AUTHORITY:

By:_____

SCHEDULE U-1

SCHEDULE U-1 **LISTING OF COMPANIES NAMED FOR THIS CONTRACT**

COMPANY NAME	CONTACT NAME	CONTACT TELEPHONE
CON EDISON	THERESA KONG	212-460-4834
VERIZON	AUBREY MAKHANLALL	718-977-8165
TIME WARNER	JOHN PIAZZA	718-888-4261

SECTION U-3

(NO TEXT IN THIS SECTION)

(NO TEXT ON THIS PAGE)

End of Section

This Section consists of Seventeen (17) pages.

ASB - PAGES

SPECIFICATIONS FOR ABATEMENT OF TRANSIT AUTHORITY DUCT INSULATION ASBESTOS CONTAINING MATERIALS

NOTICE

THE PAGES CONTAINED IN THIS SECTION ARE ISSUED FOR THE PURPOSE OF SPECIFYING THE REQUIREMENTS OF THE CONTRACT DOCUMENTS AND HEREBY MADE PART OF SAID CONTRACT DOCUMENTS.

Abatement of Transit Authority Duct Insulation Asbestos Containing Materials ASSOCIATED WITH THE REHABILITATION OF EXISTING TRUNK WATER MAINS IN CRESCENT STREET FROM 34TH AVENUE TO 31ST AVENUE; 31ST AVENUE FROM CRESCENT STREET TO 41ST STREET; AND 41ST STREET FROM 31ST AVENUE TO 25TH AVENUE
BOROUGH OF QUEENS

Prepared By:

Bureau of Environmental and Geotechnical Services
30-30 Thomson Avenue, 5th Floor
Long Island City, New York 11101

Revision #: 00 or Final Submission
Date: July 15, 2011

(NO TEXT ON THIS PAGE)

TABLE OF CONTENTS

SECTION 79.11
ALLOWANCE FOR ASBESTOS ABATEMENT WORK PERFORMED ON EXISTING TRANSIT AUTHORITY DUCT INSULATION (REMOVAL OF ASBESTOS-CONTAINING MATERIALS, REPLACEMENT WITH NON-ASBESTOS-CONTAINING MATERIALS, AND SUPPORT AND PROTECTION OF EXISTING TRANSIT AUTHORITY DUCT, COMPLETE)

79.11.1 GENERAL

79.11.1.1 DESCRIPTION

(A) The contract documents are as defined in the "Standard Construction Contract". The General Construction Provisions of the Standard Sewer And Water Main Specifications shall apply to all work of this section.

(B) Work specified herein shall be as follows:
(1) The removal and disposal of Asbestos-Containing Materials (ACM) and asbestos-contaminated duct insulation from existing Transit Authority duct that are exposed due to other contract work.
(2) The replacement of the removed ACM insulation with a Transit Authority approved non-asbestos-containing materials insulation.
(3) The support and protection of the existing Transit Authority duct that are exposed and to remain in service at all times.

(C) The phasing and scheduling of work for this project shall be coordinated with and approved by the Engineer. The Engineer will make the final determination on all issues under this contract covered by this specification in coordination with NYC Department of Design and Construction's Bureau of Environmental and Geotechnical Services (BEGS).

79.11.1.2 SCOPE OF WORK

(A) The Contractor is to provide all labor, materials, equipment, services, testing, appurtenances, permits and agreements necessary to perform the work required for the removal and disposal of ACM and asbestos-contaminated duct insulation from existing Transit Authority duct that are exposed, the replacement of the removed ACM insulation with a Transit Authority approved non-asbestos containing materials insulation, and the support and protection of the existing Transit Authority duct that are exposed and to remain in service at all times as required by these contract documents.

All work shall be performed in accordance with this specification, EPA regulations, OSHA regulations, New York City Local Law 70, Title 15, Chapter 1 RCNY, New York State Industrial Code 56, NIOSH recommendations, and any other applicable federal, state or local government regulations. Whenever there is a conflict or overlap of the above references the most stringent provisions are applicable.

The work to be performed in order to replace the removed ACM insulation with a Transit Authority approved non-asbestos containing materials insulation, and to support and protection the existing Transit Authority duct that are exposed and to remain in service at all times shall be done in accordance with Transit Authority specifications, standards and requirements.

(B) The intent of this section is to ensure that the Contractor is responsible for the following:

(1) Abatement of all exposed ACM.

(2) Cleaning and decontamination of the entire affected area.

(3) Removal of sections of ACM duct insulation, as necessary. The Contractor shall dispose of all debris associated with such removal activities as ACM waste.

(4) Removal and disposal of all exposed ACM found within these areas such as soil within excavated area, and duct insulation, etc.

(5) Replacement of the removed ACM insulation with a Transit Authority approved non-asbestos-containing materials insulation.

(6) Support and protection of the existing Transit Authority duct that are exposed and to remain in service at all times.

(7) Provide all scaffolding, platform installation, equipment, tools, transportation and any other equipment required and/or necessary to complete all work described in the contract documents.

(8) The Contractor shall be responsible for acquiring all permits required to perform this work, and paying any and all fees or changes imposed by Local, State or Federal Law, Rule or Regulation applicable to the work specified herein.

(C) The extent of the work areas requiring this work shall be as ordered by the Engineer. The Contractor shall perform the following work as described below:

WORK AREA EXCAVATION:

(1) Remove and dispose of asbestos-containing duct insulation within the work area. Asbestos-containing duct insulation shall be removed utilizing the approved NYCDEP procedure outlined below. Variance for utilizing this procedure within the work area shall be applied for by the Contractor and approved by the New York City Department of Environmental Protection (NYCDEP) prior to the start of abatement activities. In areas where duct insulation is to be removed, the Contractor shall be responsible to remove all duct insulation material within the soil below the area where the duct insulation has to be removed. All duct insulation and associated materials as well as impacted soil shall be disposed of as contaminated waste.

(2) Replacement of the removed ACM insulation with a Transit Authority approved non-asbestos-containing materials insulation, including all inspection, testing, etc. required.

(3) Support and protection of the existing Transit authority duct that are exposed and to remain in service at all times, including the design and submittal of all support and protection drawings required for approval by all appropriate agencies.

(D) The Contractor's attention is directed to the fact that patents cover certain methods of asbestos abatement indicated in the specifications. To date, patents have been issued with regard to negative pressure enclosures or negative or reduced pressure and glove-bag.

(E) The Contractor shall be solely responsible for and shall hold the City of New York Department of Design and Construction and the City harmless from any and all damages, losses and expenses resulting from any infringement by Contractor of any patent including, but not limited to, the patents described above, used by Contractor during performance of this agreement.

(F) Prior to starting abatement work, the Contractor must notify the Commissioner of the City of New York Department of Design and Construction if the Contractor anticipates any difficulty in performing the work as directed and required by these specifications. The Contractor shall be required to attend an on-site job meeting with the Engineer prior to start of abatement work to examine conditions of the site for removal and plan the sequence for removal operations.

(G) The Contractor is responsible for amending the Asbestos Inspection Report (ACP-7) and resubmitting it to the NYCDEP Asbestos Control Program prior to abatement work as per Title 15, Chapter 1 of RCNY for any changes in quantities and/or starting date.

(H) If more than one (1) year has elapsed since the original ACP-7 was submitted to the Department of Environmental Protection, the Contractor is responsible for preparing and submitting a new ACP-7 to

the Department of Environmental Protection as well as providing all other notifications to various regulatory agencies as required.

(I) In addition, the Contractor is also responsible for preparing, amending and submitting any Asbestos Variance Applications (ACP-9) that may be required for the completion of the contract or incidental work.

(J) The Contractor is also responsible for preparing and submitting all filings, notifications, etc. required by all City, State and Federal regulatory agencies having jurisdiction.

(K) For coordination with other contractors, see the General Provisions governing all contracts.

(L) Related Asbestos Removal Work Under Other Contracts:

(1) Each contractor shall be responsible for the removal of incidental asbestos not identified in this section and found prior to or during the work.

(2) Incidental asbestos is defined as ACM that is discovered during the course of their work that must be abated to enable contractors to perform the work of their contract.

(M) Work Hours:

(1) The Contractor shall establish the Contractor's work schedule in a way that avoids interference or conflict with the normal activities of the area.

(2) All work shall be done during regular working hours unless the Contractor requests authorization to work in other than regular working hours and such authorization is granted by the Commissioner. (Regular working hours are those during which any given facility in which work is to be done is customarily open and functioning).

(3) The order of phases and start dates associated with each will be determined by the Engineer.

(4) Waste transfer must be approved by the Engineer.

(N) Stages Of Asbestos Removal Work:

The Abatement Contractor or Subcontractor will be required to perform the work and it is the intent of this specification to remove all asbestos-containing and asbestos contaminated materials from the work area impeding and/or impacting the installation of any portion of the trunk water main connection. The Contractor shall inform the Engineer prior to start of this work in order that the Engineer can verify all work and quantities. No payment for this work will be made unless verified by the Engineer in writing.

(O) Certain equipment in the work area may need to remain operational during removal. Therefore, the removal of ACM from this equipment shall be performed as the last removal activities within the work area. The Contractor shall coordinate the scheduling for the removal of ACM on functioning equipment with the Engineer.

79.11.1.3 SPECIAL EXPERIENCE REQUIREMENTS FOR ASBESTOS ABATEMENT

(A) General: The special experience requirements set forth in Paragraph (B) below apply to the contractor who will be performing the Asbestos Abatement work under this contract. If the bidder intends to perform such work itself, it must demonstrate compliance with the special experience requirements. If the bidder intends to subcontract this work, the proposed subcontractor must demonstrate compliance with the special experience requirements. Once approved, no substitution will be permitted, unless the qualifications of the proposed replacement have been approved in writing in advance by the City.

(1) Evaluation: Compliance with the special experience requirements for Asbestos Abatement must be submitted for evaluation a minimum of thirty (30) days prior to commencement of that phase of work which may require removal of asbestos-containing duct insulation. The Contractor is advised that the Contractor will not be permitted to commence excavation work at the site for that phase of construction which may require possible removal of asbestos-containing duct insulation, should the Contractor's Asbestos Abatement contractor fail to comply with the special experience requirements. Compliance with the experience requirements set forth herein will be determined solely by the City.

(2) Compliance By The Asbestos Abatement Contractor As An Entity: Compliance with the special experience requirements must be demonstrated by the Asbestos Abatement contractor. The Asbestos Abatement contractor itself must have been in existence as the same entity for the three (3) year period prior to the bid opening. During such period, the entity itself must have achieved compliance with the special experience requirements. The Asbestos Abatement contractor entity may not use or rely on the experience or credentials of any other entity regardless of any relationship such other entity may have to the Asbestos Abatement contractor.

(B) Requirements: The Asbestos Abatement contractor must demonstrate compliance with the special experience requirements set forth in subparagraphs (1) through (5) below. The Asbestos Abatement contractor must submit documentation demonstrating compliance with all listed requirements. Such documentation shall include without limitation, all required licenses, certificates, and documentation.

(1) The Asbestos Abatement contractor must, whether an individual, corporation, partnership, joint venture or other legal entity, demonstrate for the three (3) year period prior to the bid opening, that it has been licensed by the New York State Department of Labor, as an "Asbestos Contractor".

(2) The Asbestos Abatement contractor must, for the three (3) year period prior to the bid opening, have been in the business of providing asbestos abatement services as a routine part of its daily operations. In addition, the Asbestos Abatement contractor must have on staff a certified Project Designer for the purpose of submitting regulatory filings with the NYSDOL and/or NYCDEP involving variances.

(3) The Asbestos Abatement contractor proposing to do asbestos abatement work must be thoroughly experienced in such work and must provide evidence of having successfully performed and completed in a timely fashion at least five (5) asbestos abatement projects of similar size and complexity. The aggregate cost of these projects must be at least $1,000,000 in each of the three (3) years.

(4) For each project submitted to meet the experience requirements set forth above, the Asbestos Abatement contractor must submit the following information for the project: name and location of the project; name title and telephone number of the owner or the owner's representative who is familiar with the Asbestos Abatement contractor's work; brief description of the work completed as a prime or sub-contractor; amount of contract or subcontract; and, the date of completion.

(5) The Asbestos Abatement contractor must demonstrate that it has the financial resources, supervisory personnel and equipment necessary to carry out the work and to comply with the required performance schedule, taking into consideration other business commitments. The Asbestos Abatement contractor must submit such documentation as may be required by the Department of Design and Construction to demonstrate that it has the requisite capacity to perform the required services of this contract.

(C) Throughout the specifications, reference is made to codes and standards which establish qualities and types of workmanship and materials, methods for testing and reporting on the pertinent characteristics thereof to provide materials or workmanship that meet or exceed the specifically named codes or standards where required by these specifications.

(D) Site Investigation: The Contractor shall inspect all the specifications and related drawings, and will investigate and confirm the site conditions affecting the work, including, but not limited to:

(1) Physical considerations and conditions of both the material and structure. These considerations include any obstacles or obstructions encountered in accessing or removing the material.

(2) Handling, storage, transportation and disposal of the material.

(3) Availability of qualified and skilled labor.

(4) Availability of utilities.

(5) Exact quantities of all materials to be disturbed and/or removed.

79.11.1.4 WORK BY OTHERS

The City reserves the right during the term of this contract to have work performed on asbestos abatement projects by other contractors as the situation warrants.

79.11.1.5 DEFINITIONS

(A) General Explanation: Certain terms used in this specification are defined below. Definitions and explanations of this specification are not necessarily complete or exclusive, but are general for the work to the extent they are not stated more explicitly in another element of the contract documents.

(B) Definitions In General Use:

(1) Approve: Where used in conjunction with Engineer's response to submittals, requests, applications, inquiries, reports and claims by Contractor, the meaning of term "approved" will be held to limitations of Engineer's responsibilities and duties as specified in contract documents. In no case will "approval" by Engineer be interpreted as a release of Contractor from responsibilities to fulfill requirements of contract documents.

(2) Directed, Requested, Etc.: Where not otherwise explained, terms such as "directed," "requested," "authorized," "selected," "approved," "required," "accepted," and "permitted" mean "directed by Engineer," "requested by Engineer," and similar phrases. However, no such implied meaning will be interpreted to extend Engineer's responsibility into Contractor's responsibility for construction supervision.

(3) Furnish: Except as otherwise defined in greater detail, term "furnish" is used to mean supply and deliver to project site, ready for unloading, unpacking, assembly, installation, etc., as applicable in each instance.

(4) Indicated: The term "indicated" is a cross-reference to graphic representations, notes or schedules on drawings, to other paragraphs or schedules in the specifications, and to similar means of recording requirements in contract documents. Where terms such as "shown," "noted," "scheduled," and "specified" are used in lieu of "indicated," it is for purpose of helping reader locate cross-reference, and no limitation of location is intended except as specifically noted.

(5) Install: Except as otherwise defined in greater detail, term "install" is used to describe operations at project site including unloading, unpacking, assembly, erection, placing, anchoring, applying, working to dimension, finishing, curing, protecting, cleaning and similar operations, as applicable in each instance.

(6) Installer: The term "installer" is defined as the entity (person or firm) engaged by Contractor, or its subcontractor or sub-subcontractor for performance of a particular unit of work at project site, including installation, erection, application and similar required operations. It is a general requirement that such entities (installers) be expert in operations they are engaged to perform.

(7) Provide: Except as otherwise defined in greater detail, term "provide" means furnish and install, complete and ready for intended use, as applicable in each instance.

(8) Testing Laboratory: The term "Testing Laboratory" is defined as an entity engaged by the City to perform specific inspections or tests of the work, either at project site or elsewhere; and to report and (if required) interpret results of those inspections or tests.

(C) Definitions Relative To Asbestos Abatement:

(1) Abatement: Procedures physically taken to control fiber release from ACM. This includes removal, encapsulation, enclosure, and repair.

(2) Aggressive Sampling: Method of sampling in which the individual collecting the air sample creates activity by the use of mechanical equipment during the sampling period to stir up settled dust and simulate activity in that area of the building.

(3) AIHA: American Industrial Hygiene Association.

(4) Airlock: System for permitting entrance and exit while restricting air movement between a contaminated area and an uncontaminated area. It consists of two (2) curtained doorways separated by a distance of at least three (3) feet such that one passes through one doorway into the airlock, allowing the doorway sheeting to overlap and close off the opening before proceeding through the second doorway, thereby preventing flow-through contamination.

(5) Air Sampling: Process of measuring the fiber content of a known volume of air collected during a specific period. The procedure utilized for asbestos follows the NIOSH Standard Analytical Method 7400, or the provisional transmission electron microscopy methods developed by the US EPA which is utilized for lower detection levels and specific fiber identification.

(6) Amended Water: Water to which a surfactant has been added.

(7) ANSI: American National Standards Institute.

(8) Area Air Sampling: Any form of air sampling or monitoring where the sampling device is placed at some stationary location.

(9) Asbestos: Any hydrated mineral silicate separable into commercially usable fibers, including but not limited to chrysotile (serpentine), amosite (cumingtonite-grunerite), crocidolite (riebeckite), tremolite, anthophyllite and actinolite.

(10) Asbestos-Containing Material (ACM): Asbestos or any material containing more than one percent (1%) asbestos.

(11) Asbestos-Containing Waste Material: ACM or asbestos-contaminated objects requiring disposal.

(12) Asbestos Handler: Individual who disturbs, removes, repairs, or encloses friable asbestos material. This individual shall have completed approved training course(s) and be in possession of certification issued by NYCDEP and NYSDOL.

(13) Asbestos Handler Supervisor: Individual who supervises the handlers during an asbestos project and ensures that proper asbestos abatement procedures as well as individual safety procedures are being adhered to. This individual shall have completed approved training course(s) and be in possession of certification issued by NYCDEP and NYSDOL.

(14) Asbestos Handling Certificate: Certificate(s) issued to individuals who have met the criteria established by NYCDEP and/or NYSDOL.

(15) Asbestos Inspection Report: A report on the condition of a building or structure in relation to the presence and condition of asbestos therein.

(16) Asbestos Investigator: An individual certified by NYCDEP as having successfully demonstrated the ability to identify the presence of and evaluate the condition of asbestos in a building or structure.

(17) Asbestos Project: Any form of work performed in connection with the alteration, innovation, modification, or demolition of a building or structure which will disturb (e.g. remove, enclose, encapsulate) more than three (3) linear feet or more than three (3) square feet of friable ACM.

(18) ASTM: The American Society for Testing and Materials International.

(19) Authorized Visitor: Authorized visitor shall mean the Commissioner and the Commissioner's representative, and any representative of a regulatory or other agency having jurisdiction over the project.

(20) Certified Industrial Hygienist (CIH): Individual with a minimum of five (5) years experience as an industrial hygienist and who has successfully completed both levels of the examination administered by the American Board of Industrial Hygiene and who is currently certified by that board.

(21) Certified Safety Professional (CSP): Individual having a bachelor's degree from an accredited college or university and a minimum of four (4) years experience as a safety professional and who has successfully completed both levels of the examination administered by the Board of Certified Safety Professionals and who is currently certified by that board.

(22) City: Shall mean the City of New York.

(23) Clean Room: An uncontaminated area or room that is part of worker decontamination enclosure system with provisions for storage of workers' street clothes and protective equipment.

(24) Clearance Air Monitoring: Employment of aggressive sampling techniques with a volume of air collected to determine the airborne concentration of residual fibers and shall be performed as the final abatement activity.

(25) Commissioner: Shall mean the head of the Agency that has entered into this contract or a duly authorized representative.

(26) Competent Person: Shall mean the designated person as defined in OSHA 29CFR 1926.1101.

(27) Curtained Doorway: Device that consists of at least three (3) overlapping sheets of polyethylene over an existing or temporarily framed doorway. One sheet shall be secured at the top and left side, the second sheet at the top and right side, and the third sheet at the top and left side. All sheets shall have weights attached to the bottom to ensure that the sheets hang straight and maintain a seal over the doorway when not in use.

(28) Decontamination Enclosure System: Series of connected rooms, separated from the work area and from each other by air locks, for the decontamination of workers, materials, waste containers, and equipment.

(29) Encapsulant (Sealant) or Encapsulating Agent: Liquid material which can be applied to ACM and which temporarily controls the possible release of asbestos fibers from the material either by creating a membrane over the surface (bridging encapsulant) or by penetrating into the material and binding its components together (penetrating encapsulant). This may also be used to seal surfaces from which ACM has been removed.

(30) Encapsulation: Coating or spraying of ACM with a sealant.

(31) Enclosure: Construction of airtight walls and/or ceilings between ACM and the facility environment, or around surfaces coated with ACM, or any other appropriate procedure as determined by the NYCDEP which prevents the release of asbestos fibers.

(32) ELAP: Environmental Laboratory Approval Program administered by the New York State Department of Health.

(33) EPA or USEPA: United States Environmental Protection Agency.

(34) Equipment Room: Contaminated area or room that is part of the worker decontamination enclosure system with provisions for the storage of contaminated clothing and equipment.

(35) Fixed Object: Utility or associated piping within the work area that cannot be removed from the work area.

(36) Friable Asbestos Material: Asbestos or any ACM that can be crumbled, pulverized, or reduced to powder when dry, by hand or other mechanical pressure.

(37) Glove-Bag Technique: Method for removing friable ACM from heating, ventilation, and air conditioning (HVAC) ducts, short piping runs, valves, joints, elbows, and other nonplanar surfaces in a noncontained work area. The glove-bag assembly is a manufactured device consisting of a glove-bag (constructed of at least 6-mil transparent polyethylene), two inward-projecting long sleeve gloves, one inward-projecting water wand sleeve, an internal tool pouch, and an attached, labeled receptacle for asbestos waste. The glove-bag is constructed and installed in such a manner that it surrounds the object or area to be decontaminated and contains all asbestos fibers released during the removal process.

(38) HEPA-Filter: High efficiency particulate air filter capable of trapping and retaining 99.97-percent of particles (asbestos fibers) greater than 0.3-micrometers mass median aerodynamic equivalent diameter.

(39) Holding Area: Chamber in the equipment decontamination enclosure located between the washroom and an uncontaminated area.

(40) Homogeneous Work Area: Portion of the work area that contains one type of ACM and/or where one type of abatement is used.

(41) Industrial Hygiene: Science and art devoted to the recognition, evaluation, and control of those environmental factors or stresses, arising in or from the work place, which may cause sickness, impaired health and well being, or significant discomfort and inefficiency among worker or among the citizens of the community.

(42) Industrial Hygienist: Individual having a college or university degree or degrees in Engineering, Chemistry, Physics or Medicine, or related Biological Sciences who, by virtue of special studies and training, has acquired competence in industrial hygiene. Such special studies and training must have been sufficient in all of the above cognate sciences to provide the abilities:

(a) To recognize the environmental factors and to understand their effect on people and their well being; and,

(b) To evaluate, on the basis of experience and with the aid of quantitative measurement techniques, the magnitude of these stresses in terms of ability to impair people's health and well being; and,

(c) To prescribe methods to eliminate, control, or reduce such stresses when necessary to alleviate their efforts.

(43) Large Asbestos Project: Asbestos project involving the disturbances (e.g. removal, enclosure, encapsulation) of 260-linear feet or more of friable ACM or 160-square feet or more of friable ACM.

(44) Major Violation: Any action, on the job performance or lack of performance that may place any individual at risk other than the worker who commits the violation. A major violation is equivalent to two (2) violation points.

(45) Minor Asbestos Project: Project involving the disturbance (e.g. removal, enclosure, encapsulation, repair) of more than three (3) linear feet, but not more than twenty-five (25) linear feet of friable ACM or more than three (3) square feet, but not more than ten (10) square feet of friable ACM.

(46) Minor Violation: Any action, on the job performance or lack of performance that may place the worker at risk. A minor violation is equivalent to one (1) violation point.

(47) Movable Object: Any equipment or utility in the work area that can be removed from the work area.

(48) Negative Air Pressure Equipment: Portable local exhaust system equipped with HEPA filtration. The system shall be capable of creating a negative pressure differential between the outside and inside of the work area.

(49) NESHAPS: National Emission Standards for Hazardous Air Pollutants.

(50) NIOSH: National Institute for Occupational Safety and Health.

(51) NYCDEP: New York City Department of Environmental Protection.

(52) NYSDOL: New York State Department of Labor.

(53) Occupied Area: Area of the work site where abatement is not taking place and where personnel or occupants normally function or where workers are not required to use personal protective equipment.

(54) OSHA: Occupational Safety and Health Administration.

(55) Person: Individual, partnership, company, corporation, association, firm, organization, governmental agency, administration, or the NYCDEP, or any other group of individuals, or any officer or employee thereof.

(56) Personal Air Monitoring: Method used to determine employees' exposure to airborne fibers. The sample is collected outside the respirator in the worker's breathing zone.

(57) Personal Protective Equipment (PPE): Appropriate protective clothing, gloves, eye protection, footwear, and head gear.

(58) Physician: Person licensed or otherwise authorized under Article 131 Section 65.22 of the New York State Education Law.

(59) Plasticize: Cover floors and walls with polyethylene sheeting as herein specified or by using spray plastics as acceptable to the NYCDEP.

(60) Professional Engineer (PE): Individual having, at a minimum, a Bachelor's Degree in Engineering from an accredited college or university with four (4) years acceptable experience as an engineer and who has successfully completed both levels of the Professional Engineers Examination administered by the State of New York Department of Education, Division of Professional Licensing.

(61) Qualitative Fit Test: Individual test subject's responding (either voluntarily or involuntarily) to a chemical challenge outside the respirator face-piece. Three of the most popular methods include: (1) irritant smoke test; (2) odorous vapor test; and (3) taste test.

(62) Quantitative Fit Test: Exposing the respiratory wearer to a test atmosphere containing an easily detectable, nontoxic aerosol, vapor or gas as the test agent. Instrumentation, which samples the test atmosphere and the air inside the face-piece of the respirator, is used to measure quantitatively the leakage into the respirator. There are a number of test atmospheres, test agents, and exercises to perform during the test.

(63) Registered Architect (RA): Individual having, at a minimum, a Bachelor's Degree in Architecture from an accredited college or university with three (3) years acceptable experience as an architect and who has successfully completed both levels of the Architects Registration Examination administered by the State of New York Department of Education, Division of Professional Licensing.

(64) Removal: Stripping of any asbestos-containing materials from surfaces or components of a structure or taking out structural components in accordance with 40 CFR 61 Subparts A and M.

(65) Shower Room: Room between the clean room and the equipment room in the worker decontamination enclosure with hot and cold running water controllable at the tap and arranged for complete showering during decontamination.

(66) Small Asbestos Project: Asbestos project involving the disturbance (e.g. removal, enclosure, encapsulation) of more than 25-linear feet and less than 260-linear feet of friable ACM or more than 10-square feet and less than 160-square feet of friable ACM.

(67) Staging Area: Work area near the waste transfer airlock where containerized asbestos waste has been placed prior to removal from the work area.

(68) Structural Member: Load-supporting member of a facility, such as beams and load-supporting walls, or any nonload-supporting member, such as ceiling and nonload-supporting walls.

(69) Surfactant: Chemical wetting agent added to water to improve penetration.

(70) Visible Emissions: Emissions containing particulate material that are visually detectable without the aid of instruments.

(71) Washroom: Room between the work area and the holding area in the equipment decontamination enclosure system where equipment and waste containers are wet cleaned and/or HEPA-vacuumed prior to disposal.

(72) Wet Cleaning: Removal of asbestos fibers from building surfaces and objects by using cloths, mops, or other cleaning tools which have been dampened with amended water.

(73) Work Area: Designated excavation, spaces, or areas within a trench or structure where asbestos abatement activities take(s) place.

(74) Worker Decontamination Enclosure System: Portion of a decontamination enclosure system designed for controlled passage of workers and authorized visitors, consisting of a clean room, a shower room, and an equipment room separated from each other and from the work area by airlocks and curtained doorways.

(75) Work Site: Area where abatement activity is being performed. May be composed of one or more work areas.

79.11.1.6 STANDARD OPERATING PROCEDURES

(A) Develop and implement a written standard procedure for abatement work to ensure maximum protection and safeguard from asbestos exposure of the workers, visitors, employees, public, and environment.

(B) TELEPHONE PAGING DEVICE:

The Contractor or the Contractor's authorized representative shall, at all times during the normal workday or during periods of overtime work under this contract, carry a digital telephone paging device ("Beeper") and cellular telephones which can be activated by a telephone number in the 212 or 646 or 718 or 917 area code. The Contractor shall supply the Department of Design and Construction with the activation number for the device and the Contractor is liable to respond back to the calls from DDC within the next one (1) hour period after the Contractor receives calls from DDC. The cost for this device and all charges accruing shall be deemed included in all scheduled items of work.

(C) The standard operating procedure shall ensure:

(1) Tight security from unauthorized entry into the workspace.

(2) Restriction of Contractor's personnel to the immediate work area and access/egress routes.

(3) Donning of proper protective clothing and respiratory protection prior to entering the work area.

(4) Safe work practices in the work place, including provisions for inter-room communications, exclusion of eating, drinking, smoking, or in any way breaking the respiratory protection.

(5) Proper exit practices from the work space to the outside through the showering and decontamination facilities.

(6) Removing asbestos in ways that minimize release of fibers.

(7) Packing, labeling, loading, transporting, and disposing of contaminated material in a way that minimize exposure and contamination.

(8) Emergency evacuation procedures, for medical or safety situations, to minimize the potential exposure to airborne asbestos fibers for emergency personnel, and building environment.

(9) Safety from accidents in the workspace, especially from electrical shocks, fall hazards associated with scaffolding, slippery surfaces, and entanglements in loose hoses and equipment.

(10) Provisions for effective supervision, air monitoring and personnel monitoring for exposure during the work.

(11) Engineering systems that minimize exposure to fibers within the workspace.

(D) Provide an Asbestos Handler Supervisor to provide continuous supervision of all work, and to be responsible for the following:

(1) Ensure that individuals are using proper personal protective equipment and are trained in its use.

(2) Maintain entry log records and ensure that they are recorded in accordance with the provisions of Title 15, Chapter 1 of RCNY.

(3) Surveillance of the work areas at a minimum of twice per work shift or as required by Title 15, Chapter 1 of RCNY, to ensure that the workers personal protective equipment is not torn or ripped and that respiratory protection is worn at all times.

(4) Ensure that sufficient personal protective equipment is stored in the clean room.

(5) Take precautions to prevent heat stress. Precautions include, but are not limited to, selecting lightweight protective clothing, reducing the work rate, and providing adequate fluid breaks.

(E) ENGINEERING CONTROLS:

(1) The 8-hour time weighted average airborne concentration of fibers to which any passerby may be exposed shall not exceed 0.01-fibers per cubic centimeter of air when fibers have a physical dimension longer than 5-micrometers as determined by the method prescribed in these specifications.

(2) All large asbestos projects shall utilize negative pressure ventilation equipment.

(3) The negative pressure ventilation equipment shall operate continuously, 24-hours a day, from the establishment of isolation barriers through successful clearance air monitoring. If such equipment shuts off, adjacent areas shall be monitored for asbestos fibers.

(4) On loss of negative pressure or electric power to the negative pressure ventilating units, abatement shall stop immediately and shall not resume until power is restored and negative pressure ventilation equipment is operating again.

(5) Negative pressure ventilation equipment shall be exhausted to the outside of the tent enclosure away from passer-by and/or sidewalks.

(a) At no time shall the negative pressure ventilation unit exhaust with 40-feet of a receptor or adversely affect the intake ports, louvers, or entrances for the adjacent buildings.

(b) Heavy duty ducting of equivalent, or larger, shape and dimension as that of the negative pressure ventilation exhaust port shall be used to exhaust to the structure.

(c) All ducting shall be sealed and braced or supported to maintain airtight joints.

(6) Where ducting to the outside is not possible, a second negative pressure ventilation unit compatible with the primary unit's capacity shall be connected in series. The area receiving the exhaust shall have sufficient, nonrecycling exhaust capacity to the outside of the structure. Ventilation unit exhaust ducting shall not exceed twenty five (25) feet in length due to volumetric flow rates caused by friction

(7) In the event that there is a failure of the containment system or a breach in the Isolation Barriers, all abatement work will cease and the Contractor will immediately correct the condition. Abatement work will not resume until the work area has been smoke tested by the third party laboratory and approved by the Project Monitor.

(F) LOCKDOWN ENCAPSULATION PROCEDURES:

The following procedures shall be followed to seal in nonvisible residue while conducting lockdown encapsulation on all surfaces from which ACM is removed:

(a) Only encapsulants rated as acceptable or marginally acceptable on the basis of Battelle Columbus Laboratory test procedures and rating requirements developed under the 1978 USEPA Contract shall be used for lockdown encapsulation.

(b) The encapsulant solvent or vehicle shall not contain a volatile hydrocarbon unless reviewed and approved by DEP.

(c) Latex paint with solids content greater than 15-percent shall be considered a lockdown sealant for coating all nonmetallic surfaces.

(d) Encapsulants shall be applied using airless spray equipment. Spraying is to occur at the lowest pressure range possible to minimize fiber release from encapsulant impact at the surface. It shall be applied with a consistent horizontal or vertical motion.

79.11.1.7 NOTIFICATIONS, PERMITS, WARNING SIGNS, LABELS, AND POSTERS

(A) Erect bilingual (English-Spanish) warning signs around the excavation and at every point of potential entry from the street level which can be viewed by the public without obstruction, in accordance with OSHA 29 CFR 1926.1101 (K) (Sign Specifications) and Title 15, Chapter 1 of RCNY. The warning signs shall be a bright color so that they will be easily noticeable. The size of the sign and the size of the lettering shall be no less than OSHA requirements.

(B) Provide the required labels for all polyethylene bags and all drums utilized to transport contaminated material to the landfill in accordance with OSHA 29 CFR 1926.1101 (K)(2) and by 49 CFR Parts 171 and 172 of the Department of Transportation regulations.

(C) Provide any other signs, labels, warnings, and posted instructions that are necessary to protect, inform and warn people of the hazard from asbestos exposure. Post in a prominent and convenient place for the workers a copy of the latest applicable regulations from OSHA, EPA, NIOSH, State of New York and New York City and any additional items mandated for posting by the aforementioned regulations.

(D) Furnish all permits, variances and notices required to perform the work.

79.11.1.8 EMERGENCY PRECAUTIONS

(A) Establish emergency exit(s) from the work area. The clean side of all emergency exits shall be equipped with two full sets of protective clothing and respirators at all times.

(B) Notify local medical emergency personnel, both ambulance crews and hospital emergency room staff prior to commencement of abatement operations as to the possibility of having to handle contaminated or injured workmen, and shall be advised on safe decontamination.

(C) Prepare to administer first aid to injured personnel after decontamination. Seriously injured personnel shall be treated immediately or evacuated immediately for decontamination. When an injury occurs, precautions shall be taken to reduce airborne fiber concentrations (i.e. misting of the air with water) until the injured person has been removed from the work area.

(D) Notify, before actual removal of the asbestos material, the local police and fire departments to the danger of entering the excavated area where removal is taking place. Contractor shall make every effort to help these agencies form plans of action should their personnel need to enter the contaminated area.

79.11.1.9 SUBMITTALS

(A) Construction Submittals:

Five (5) business days prior to excavating within three (3) feet of existing Transit Authority ducts which may contain asbestos-containing materials, the Contractor shall submit three (3) copies of the Contractor's detailed plan of action including the following items, bound and indexed. At this time and prior to this excavation work a meeting will be scheduled by the City of New York Department of Design and Construction. This meeting shall be attended by the Contractor and the Contractor's Subcontractor(s), a designated representative of the City of New York third party air monitoring firm and the Engineer.

(a) Contractor's scope of work, work plan and schedule.

(b) Notifications to Government Agencies.

(c) Copies of permits, clearance and licenses if required.

(d) Schedules: The Contractor shall provide to the Engineer a copy of the following schedules for approval. Once approved, schedules shall be maintained and updated as received. The Contractor shall post a copy of all schedules at the site:

(1) A construction schedule stating critical dates of the project including, but not limited to, mobilization, work area preparation, demolition, gross removal, fine cleaning, encapsulation, inspections, clearance monitoring, and phase of refinishing and final inspections. The schedule shall be updated biweekly, at a minimum.

(2) A schedule of staffing stating number of workers per shift per activity, name and number of supervisor(s) per shift, shifts per day, and total days to be worked.

(3) Submit all changes in schedule or staffing to the Engineer prior to implementation.

(4) A schedule of equipment to be used including numbers and types of all major equipment such as HEPA Air Filtration Units, HEPA-vacuums, airless sprayers, Water Atomizing Devices and Type "C" compressors.

(e) A written plan and shop drawings for preparation of work site and decontamination chamber.

(f) Description of protective clothing and approved respirator to be used, make, model, NIOSH approval numbers.

(g) Delineation of responsibility of work site supervision, including competent person, with names, resumes, and home telephone numbers.

(h) Explanation of decontamination sequence and isolation techniques.

(i) Description of specific equipment to be utilized, including make and model number of air filtration devices, vacuums, sprayers, etc.

(j) Description of any prepared methods, procedures, techniques, or equipment other than those specified in the contract documents.

(k) Explanation of the handling of contaminated wastes including EPA and NYCDEP identification numbers of Waste Hauler.

(l) Description of the final clean-up procedures to be used.

(m) Name and qualifications of Contractor's testing laboratory including AIHA accreditation, and proof of NIOSH PAT and NIST/NVLAP Bulk Quality Assurance Proficiency of OSHA samples for approval by the City of New York Department of Design and Construction.

(n) Written description of emergency procedures to be followed in case of injury or fire. This section must include evacuation procedures, source of medical assistance (name and telephone number) and procedures to be used for access by medical personnel (examples: first aid squad and physician). NOTE: Necessary Emergency Procedures Shall Take Priority Over All Other Requirements Of These Specifications.

(o) Material Safety Data Sheets (MSDS) for encapsulants, sealants, firestopping foam, cleaners/disinfectants, spray adhesive and any and all potentially hazardous materials that may be employed on the project. No work involving the aforementioned will be allowed to proceed until MSDS are reviewed.

(p) Worker Training And Medical Surveillance: Contractor shall submit a list of the persons who will be employed by The Contractor and the Contractor's Subcontractors in the removal work.

Present evidence that workers have received proper training required by the regulations and the medical examinations required by OSHA 29 CFR 1926.1101.

(q) Logs: Specimen copies of daily progress log, visitor's log, and disposal log.

(1) The Contractor shall provide a permanently bound log book of minimum 8-1/2" x 11" size at the entrance to the Worker and Waste Decontamination enclosure system as hereinafter specified. Log book shall contain on title page the project name, name, address and phone number of Environmental Control Representative; name, address and phone number of Abatement Contractor; name, address and phone number of Contractor and City's air testing entity; and, emergency numbers including, but not limited to local Fire/Rescue Department. Log book shall contain a list of personnel approved by the laboratory for entry into the work area.

(2) All entries into the log shall be made in nonwashable, permanent ink and such pen shall be strung to or otherwise attached to the log to prevent removal from the log-in area. Under no circumstances shall pencil entries be permitted. Any significant events occurring during the abatement project shall be entered into the log. Upon completion of the job, the Contractor shall submit the logbook containing a day-to-day record of personnel log entries countersigned by the Project Monitor everyday.

(r) Worker's Acknowledgments: Submit statements signed by each employee that the employee has received training in the proper handling of ACM understands the health implications and risks involved; and understands the use and limitations of the respiratory equipment to be used.

(B) Copies of the following items shall be submitted to the Project Monitor during the work:

(1) Security and safety logs showing names of person entering workspace, date and time of entry and exit, record of any accident, emergency evacuation, and any other safety and/or health incident.

(2) Progress logs showing the number of workers, supervisors, hours of work and tasks completed daily to the Engineer.

(3) Contractor's current work progress for review by the Engineer at weekly progress meetings.

(4) All Contractors' air monitoring and inspection results.

(C) Project Closeout Submittals:

Upon completion of the project and as a condition of acceptance, the Contractor shall present two (2) copies of the following items, bound and indexed:

(1) Lien Waivers from Contractor, Subcontractors and Suppliers,

(2) Daily OSHA air monitoring results,

(3) All Waste Manifests (Asbestos and Construction Debris), seals and disposal logs,

(4) Field Sign-In/Sign-Out Logs for every shift,

(5) A Letter of Compliance stating that all the work on this project was performed in accordance with the specifications and all applicable Federal, State and Local regulations,

(6) All Warranties as stated in the specifications,

(7) Fully executed disposal certificates and transportation manifest.

79.11.1.10 QUALITY ASSURANCE

(A) All work required for the completion of this project or called for in this specification must be executed in a workmanlike manner by using the appropriate methods established by regulatory requirements and/or industrial standards. All workmanship or work methods are subject to review and acceptance by the Engineer. Throughout the specification, reference is made to codes and standards which establish qualities, levels or types of workmanship which will be considered acceptable. It is the Abatement Contractor's responsibility to comply with these codes and standards during the execution of this work.

(B) All materials and equipment required or consumed during the work of this contract must meet the minimum acceptable criteria established by codes and standards referenced elsewhere in this specification. Materials and equipment must be submitted for prior approval as part of the Contractor's "Shop Drawings".

(C) It is the Abatement Contractor's responsibility, when so required by the specification or upon written request from the Commissioner or the Commissioner's representative to furnish all required proof that workmanship, materials and/or equipment meet or exceed the codes and standards referenced. Such proof shall be in the form requested, typically a certified report or test conducted by a testing entity approved for that purpose by DDC.

(D) The Contractor shall furnish proof that employees working under the Contractor's supervision have had instruction on the dangers of asbestos exposure, on respirator use, decontamination, and OSHA regulations. This proof shall be in the form of a notarized affidavit to the effect that the above requirements have been satisfied. In addition, the Contractor shall have posted in the clean room of the decontamination enclosure unit all state and city certification of all workers involved in the handling and removal of asbestos.

(E) The Contractor will have at all times in the Contractor's possession and in view at the job site the OSHA regulations 29 CFR 1910.1001, and 1926.1101 Asbestos, and Environmental Protection Agency 40 CFR, Part 61, subpart B: National Emission Standard for asbestos, asbestos stripping, work practices and disposal of asbestos waste. The Contractor shall also have one copy of NYC Title 15, Chapter 1 of RCNY and NYS DOL ICR 56 at the job site at all times.

(F) Familiarity With Pertinent Codes And Standards: In procuring all items used in this work, it is the Contractor's responsibility to verify the detailed requirements of the specifically named codes and standards and to verify that the items procured for use in this work meet or exceed the specified requirements, and are suitable for their intended use.

(G) Rejection Of Noncomplying Items: The Commissioner reserves the right to reject items incorporated into the work that fail to meet the specified minimum requirements. The Commissioner further reserves the right, and without prejudice to other recourse that maybe taken, to accept noncomplying items subject to test and approval by the City.

(H) Applicable Regulations, Codes And Standards: Applicable standards listed in these specifications include, but are not necessarily limited to, standards promulgated by the following agencies and organizations:

(1) United States Environmental Protection Agency (EPA or USEPA)
Region II
Asbestos NESHAPS Contact
Air And Waste Management Division
(Air Compliance Branch) - USEPA
290 Broadway, 21st Floor
New York, New York 10007-1866
212-637-3660

(2) Occupational Safety and Health Administration (OSHA)
Region II - Regional Office
201 Varick Street, Room 908
New York, New York 10014
212-337-2378

(3) National Electrical Code (NEC)
See NFPA

(4) National Fire Protection Association (NFPA)
1 Batterymarch Park
Quincy, Massachusetts 02169-7471
617-770-3000

(5) National Institute for Occupational Safety and Health (NIOSH)
Robert A. Taft Laboratory
4676 Columbia Parkway
Mailstop R12 Cincinnati, Ohio 45226
513-841-4428

(6) Department of Health and Mental Hygiene (DOHMH)
Environmental Investigation
125 Worth Street
New York, New York 10013
212-442-3372

(7) American National Standards Institute (ANSI)
(Successor to USASI and ASA)
25 West 43rd Street (between 5th and 6th Avenue), 4th Floor
New York, New York 10036
212-642-4900

(8) American Society for Testing and Materials (ASTM)
100 Bar Harbor Drive
West Conshohocken, Pennsylvania 19428-2959
610-832-9500

(9) New York City Department of Environmental Protection (NYCDEP)
Bureau of Environmental Compliance
Asbestos Control Program
59-17 Junction Boulevard, 8th Floor
Corona, New York 11368
718-595-3682

(10) New York City Department of Sanitation
125 Worth Street, Room 714
New York, New York 10013
212-566-1066

(11) New York State Department of Labor (NYSDOL)
Division Of Safety And Health
Engineering Services Unit
State Office Building Campus
Albany, New York 12240-0010

(I) Post all applicable regulations in a conspicuous place at the job site. Assure that the regulations are not altered, defaced or covered by other materials. One copy of each regulation must also be kept at the Contractor's office.

79.11.1.11 CITY/CONTRACTOR RESPONSIBILITIES

(A) The City will not enter the portions of the excavation, in which work is being performed during the entire asbestos removal operation, including completion of clean up.

(B) The Contractor shall provide a plan for 24-hours job security both for prevention of theft and for barring entry of curious but unprotected personnel into work areas.

(C) The Contractor shall provide own means of power if needed and the City will not be held responsible for the downtime due to faulty Contractor's equipment.

(D) The Contractor shall provide all electrical, water, and waste connections, tie-ins, extensions, and construction materials, supplies, etc. At the end of each shift, the Contractor shall disconnect all hoses within the work zone and place in equipment room of the worker decontamination unit. The Contractor shall ensure positive shutoff of all water to work area during nonworking hours.

(E) All temporary facilities required to be installed, shall be subject to the approval of the Commissioner. Prior to starting the work at any site; specify clearly the temporary locations of facilities preferably with sketches and submit the same to the Engineer for approval.

(F) The Contractor shall provide water needed to conduct the required asbestos abatement. All temporary plumbing or adaptations to supply the needs of the work area shall be installed and removed by the Contractor. Shower water for the decontamination unit shall be provided hot. Heating of water, if necessary, shall be provided by the Contractor.

(G) Any additional electrical equipment (i.e. transformers, etc.), which is necessary shall be provided by the Contractor.

(H) The Contractor shall provide fire protection in accordance with all State and Local fire codes.

(I) Any parts of the service lines, within the excavated work area, disturbed or damaged by the installation and/or removal of the temporary service lines, shall be restored to their original condition by the Contractor to the satisfaction of the respective utility company.

(J) Contractor shall supply hot shower water necessary for use in the decontamination unit.

79.11.1.12 USE OF THE AREA

(A) The Contractor shall confine Contractor's apparatus, the storage of materials, and supplies, and the operation of the Contractor's workmen to limits established by law, ordinances, and the directions of the Engineer. All flammable or combustible materials shall be properly stored to obviate fire and in areas approved by the Engineer.

(B) The Contractor shall assure of a clear path out of the excavated area, that appropriate safety barriers are established to prevent access, and that work areas are kept neat, clean, and safe.

(C) All surrounding work, fixtures, soil lines, drains, water lines, gas pipes, electrical conduit, wires, utilities, etc. which are to remain in place shall be carefully protected and, if disturbed or damaged, shall be repaired or replaced as directed by the City in accordance with the terms of this contract.

(D) Attention is specifically drawn to the fact that other contractors, performing the work of other contracts, may be (or are) brought upon any of the work sites of this contract. Therefore, the Contractor shall not have exclusive rights to any site of work and shall fully cooperate and coordinate Contractor's work with the work of other contractors who may be on (or are on) any site of the work of this contract. Regulated area exempted.

(E)Temporary toilet facilities must be provided by the Contractor on the site. Coordinate location of such facilities with the Engineer.

79.11.1.13 PROTECTION AND DAMAGE

(A) The Contractor is responsible to cover and protect all equipment that cannot be removed from work areas.

(B) No materials or debris shall be thrown within the excavated area.

(C) Debris shall be removed from the work site daily. Work area shall be left neat and clean after each work shift, so that work may proceed the next regular workday without interruption. Limited bag storage may take place within the work area when approved by the Engineer.

79.11.1.14 RESPIRATORY PROTECTION REQUIREMENTS

(A) Respiratory protection shall be worn by all individuals who may be exposed to asbestos fibers from the initiation of the asbestos project until all areas have successfully passed clearance air monitoring in accordance with regulations and these specifications.

(B) The Contractor shall develop and implement a written respiratory protection program with required site-specific procedures and elements. The program shall be administered by a properly trained individual. The written respiratory protection program shall include the requirements set forth in OSHA Standard 29 CFR 1910.134, at a minimum.

(C) The Contractor shall provide workers with individually issued and marked respiratory equipment. Respiratory equipment shall be suitable for the asbestos exposure level(s) in the work area(s), as specified in OSHA Standards 26 CFR 1910.134 and 29 CFR 1926.1101, NIOSH Standard 42 CFR 84, or as more stringently specified otherwise, herein.

(D) Where respirators with disposable filter parts are employed, the Contractor will provide sufficient filter parts for replacement as necessary or as required by the applicable regulation.

(E) All respiratory protection shall be NIOSH approved. All respiratory protection shall be provided by the Contractor, and used by workers in conjunction with the written respiratory protection program.

(F) Contractor shall provide respirators selected by an Industrial Hygienist that meet the following requirements:

AIRBORNE CONCENTRATION OF ASBESTOS OR CONDITIONS OF USE	REQUIRED RESPIRATOR
Not in excess of 1-fibers per cubic centimeter (f/cc), ten (10) times Permissible Exposure Level (PEL)	Half-mask air purifying respirator, other than a disposable respirator, equipped with high efficiency filters.
Not in excess of 5-f/cc, 50 times PEL	Full face-piece air-purifying respirator equipped with high efficiency filters.
Not in excess of 100-f/cc, 1,000 times PEL	Powered air purifying respirator equipped with equipped with high efficiency filters or any supplied air respirator operated in continuous flow mode.
Not in excess of 100-f/cc, 1,000 times PEL	Full face-piece supplied air respirator operate in pressure demand mode.
Greater than 1,000-f/cc, 10,000 times PEL, or unknown concentration	Full face-piece supplied air respirator operate in pressure demand mode, equipped with an auxiliary positive pressure self-contained breathing apparatus.

(G) Selection of high efficiency filters:

(1) All high efficiency filters shall have a nominal efficiency rating of 100 (99.97-percent effective) when tested against 0.3-micrometer monodisperse diethyl-hexyl phthalate (DOP) particles.

(2) Choose N-, R-, or P- series filters based upon the presence or absence of oil particles.

(a) N- series filters shall only be used for non-oil solid and water based aerosols or fumes.

(b) R- and P -series filters shall be used when oil aerosols or fumes (i.e., lubricants, cutting fluids, glycerin, etc.) are present. The R- series filters are oil resistant and the P- series filters are oil proof.

(c) Follow filter manufacture recommendations.

(3) If a vapor hazard exists, use an organic vapor cartridge in combination with the high efficiency filter.

(H) Historical airborne fiber level data may serve as the basis for selection of the level of respiratory protection to be used for an abatement task. Historical data provided by the Contractor shall be based on personal air monitoring performed during work operations closely resembling the processes, type of material, control methods, work practices, and environmental conditions present at the site. Documentation of aforementioned results may be requested by the City and/or Testing Laboratory for review. This will not relieve the Contractor from providing personal air monitoring to determine the time-weighted average (TWA) for the work under contract. The TWA shall be determined in accordance with 29 CFR 1926.1101.

(I) At no time during actual removal operations shall half-mask air purifying respirators be allowed unless a full 8-hour TWA and excursion limit have been conducted, and reviewed by the Project Monitor. Use of single use dust respirators is prohibited for the above respiratory protection.

(J) Workers shall be provided with personally issued and individually marked respirators. Respirators shall not be marked with any equipment that will alter the fit of the respirator in any way. Only waterproof identification markers shall be used.

(K) The Contractor shall ensure that the workers are qualitatively or quantitatively fit tested by an Industrial Hygienist initially and every 12-months thereafter with the type of respirator the Contractor will be using.

(L) Whenever the respirator design permits, workers shall perform the positive and negative air pressure fit test each time a respirator is worn. Powered air-purifying respirators shall be tested for adequate flow as specified by the manufacturer.

(M) No facial hairs (beards) shall be permitted to be worn when wearing respiratory protection that requires a mask-to-face seal.

(N) If a worker wears glasses, a spectacle kit to fit their respirator shall be provided by the Contractor at the Contractor's expense.

(O) Respiratory protection maintenance and decontamination procedures shall meet the following requirements:

(1) Respirators shall be inspected and decontaminated on a daily basis in accordance with OSHA 29 CFR 1910.134 (b); and,

(2) High efficiency filters for negative pressure respirators shall be changed after each shower; and,

(3) Respiratory protection shall be the last piece of worker protection equipment to be removed. Workers must wear respirators in the shower when going through decontamination procedures as stated in **Subsection 79.11.3.3**; and,

(4) Airline respirators with high efficiency filtered disconnect shall be disconnected in the equipment room and worn into the shower. Powered air-purifying respirator face pieces shall be worn into

the shower. Filtered/power pack assemblies shall be decontaminated in accordance with manufacturers recommendations; and,

(5) Respirators shall be stored in a dry place and in such a manner that the face-piece and exhalation valves are not distorted; and,

(6) Organic solvents shall not be used for washing of respirators.

(P) Authorized visitors shall be provided with suitable respirators and instruction on the proper use of respirators whenever entering the work area. Qualitative fit test shall be done to ensure proper fit of respirator.

79.11.1.15 PROTECTIVE CLOTHING

(A) Provide worker protection as required by the most stringent OSHA and/or EPA standards applicable to the work. Provide to all workers, foremen, superintendents, authorized visitors and inspectors, protective disposable clothing consisting of full-body coveralls, head covers, gloves and 18-inch high boot type covers or reusable footwear.

(B) In addition to personal protective equipment for workers, the Contractor shall make available at each worksite at least four (4) additional uniforms and required respiratory equipment each day for personnel who are authorized to inspect the work site. The Contractor shall also provide, for the duration of the work at any site involving a decontamination unit for worksite access, a lockable storage locker for use by the Engineer. In addition to respiratory masks for workers, the Contractor must have on hand at the beginning of each work day, at least four (4) masks each with two (2) sets of fresh filters, for use by personnel who are authorized to inspect the worksite. The Contractor shall check for proper fit of the respirators of all City personnel authorized to enter the work area.

(C) Asbestos handlers involved in tent procedures shall wear two (2) disposable suits, including gloves, hood and footwear, and appropriate respiratory equipment. All street clothes shall be removed and stored in a clean room within the work site. The double layer personal protective equipment shall be used for installation of the tent and throughout the procedure, if a decontamination unit (with shower and clean room) is contiguous to the work area, only one (1) layer of disposable personal protective equipment shall be required; in this case, prior to exiting the tent the worker shall HEPA vacuum and wet clean the disposable suit.

The outer disposable suit (if two (2) suits are worn) shall be removed and remain in the tent upon exiting. Following the tent disposal and work site clean up the workers shall immediately proceed to a shower at the work site. The inner disposal unit and respirator shall be removed in the shower after appropriate wetting. The disposal clothing shall be disposed of as asbestos-containing waste material. The workers shall then fully and vigorously shower with supplied liquid bath soap, shampoo, and clean dry towels.

(D) Coveralls: Provide disposable full-body coveralls and disposable head covers. Require that they be worn by all workers in the work area. Provide a sufficient number for all required changes for all workers in the work area.

(E) Boots: Provide work boots with non-skid soles, and where required by OSHA, foot protection, for all workers. Provide boots at no cost to workers. Paint uppers of all boots yellow with waterproof enamel. Do not allow boots to be removed from the work area for any reason after being contaminated with ACM and/or dust.

(F) Hard Hats: Provide hard hats as required by OSHA for all workers, and provide a minimum of four (4) spares for Inspectors, visitors, etc. Label all hats with same warning label as used on disposal bags. Require hard hats to be worn at all times that work is in progress that may cause potential head injury. Provide hard hats of the type with polyethylene strap suspension. Require hats to remain in the work area throughout the work. Thoroughly clean and decontaminate and bag hard hats prior to removing them from the work area at the end of the work.

(G) Goggles: Provide eye protection (goggles) as required by OSHA for all workers involved in any activity that may potentially cause eye injury. Require them to be worn at all times during these activities. Thoroughly clean and decontaminate goggles before removing them from the work area.

(H) Gloves: Provide work gloves to all workers, of the type dictated by the work and OSHA Standards. Do not remove gloves from the work area. Dispose of as asbestos-contaminated waste at the end of the work. Gloves shall be worn at all times, except during work area preparation activities that do not disturb ACM.

(I) Reusable footwear, hard hats and eye protection devices shall be left in the contaminated Equipment Room until the end of the asbestos abatement work.

(J) Disposable protective clothing shall be discarded and disposed of as asbestos waste every time the wearer exits from the workspace to the outside through the decontamination facility.

(K) Respirators, disposable coveralls, head covers and foot covers shall be provided by the Contractor for the Project Monitor, Engineer and any other authorized representative who may inspect the work area. Provide two (2) respirators and six (6) respirator filter changes per day.

79.11.1.16 AIR MONITORING - CONTRACTOR

(A) The Contractor shall employ a qualified Industrial Hygiene Laboratory to analyze air samples in accordance with OSHA Regulations, 1926.1101 (Asbestos Standards for Construction) and New York City regulations.

(B) The Industrial Hygiene Laboratory shall be a current proficient participant in the American Industrial Hygiene Association (AIHA) PAT Program. The laboratory identification number shall be submitted and approved by the City. The laboratory shall be accredited by the AIHA and New York State Department of Health Environmental Laboratory Approval Program (ELAP).

(C) The Industrial Hygiene Laboratory shall also be a current proficient participant in the NIST/NVLAP Quality Assurance Program for the identification of bulk samples. Laboratory identification number shall be submitted to and approved by the City.

(D) The Contractor shall require a competent person (as defined in OSHA 1926.1101) to perform the following functions and to be on-site continuously for the duration of the project:

(1) Monitor the set up of the work area enclosure and ensure its integrity.

(2) Control entry and exit into the work enclosure.

(3) Ensure that employees are adequately trained in the use of engineering controls, proper work practices, proper personal protective equipment and in decontamination procedures.

(4) Insure that employees use proper engineering controls, proper work practices, proper personal protective equipment and proper decontamination procedures.

(5) The competent person (as defined in OSHA1926.1101) shall check for rips and tears in work suits, and ensure that they are mended immediately or replaced.

(E) Air monitoring responsibilities, shall be performed by a representative of the testing laboratory retained by the Contractor.

(F) Contractor shall submit to the City all credentials of the designated (as defined in OSHA 1926.1101) and Industrial Hygiene Laboratory representative for approval.

(G) Air monitoring and inspection shall be conducted by the Contractor's competent person (as defined in OSHA 1926.1101).

(H) Continuous (daily or per shift) monitoring and inspection will include work area samples, personnel samples from the breathing zone of a worker to accurately determine the employees' 8-hour TWA (unless Type C respirators are used) and decontamination unit clean room samples.

(I) Work area samples and employee personnel samples shall be taken using pumps whose flow rates can be determined to an accuracy of ±5-percent, at a minimum of two (2) liters per minute. This must be demonstrated at the job site.

(J) Sampling and analysis methods shall be per NIOSH 7400A.

(K) Test Reports:

(1) Promptly process and distribute one (1) copy of the test results, to the Commissioner.

(2) Prompt reports are necessary so that if required, modifications to work methods and/or practices may be implemented as soon as possible.

(3) Contractor shall by facsimile notify the Commissioner within 24-hours of the results of each test, followed by written notification within three (3) days.

(L) The Contractor's competent person shall conduct inspections and provide written reports daily. Inspections will include checking the standard operating procedures, engineering control systems, respiratory protection and decontamination systems, packaging and disposal of asbestos waste, and any other aspects of the project which may affect the health and safety of the people and environment.

(M) The City reserves the right to conduct air and surface dust sampling in conjunction with and separate from the Testing Laboratory for the purposes of Quality Assurance.

(N) All samples shall be accompanied by a Chain of Custody Record that shall be submitted to the Project Monitor upon completion of analysis.

79.11.1.17 TESTING LABORATORY

(A) The City, at its own expense, will employ the services of an Independent Testing Laboratory. The Testing Laboratory will perform air sampling activities at the site and perform periodic observations of the work site.

(B) The Laboratory will perform analysis of air samples utilizing phase contrast microscopy (PCM) and/or transmission electron microscopy (TEM). This laboratory shall meet the standards stated herein.

(C) Observations will include, but not be limited to, checking the standard operating procedures, engineering control systems, respiratory protection, decontamination systems, packaging and disposal of asbestos waste, and any other aspects of the project that may affect the health and safety of the environment, Contractor, and/or facility occupants.

(D) The Testing Laboratory shall have access to all areas of the asbestos removal project at all times and shall continuously inspect and monitor the performance of the Contractor to verify that said performance complies with this specification. The Testing Laboratory shall be on site throughout the entire abatement operation.

(E) The City will be responsible for costs incurred with the required laboratory work. Any subsequent additional testing required due to limits exceeded during initial testing shall be paid for by the Contractor.

(F) At a minimum, air sampling shall be conducted in accordance with the following schedule:

ABATEMENT ACTIVITY	PRE-ABATEMENT	DURING ABATEMENT	POST- ABATEMENT
Equal to or greater than 10,000-square feet or 10,000-linear feet of ACM	PCM	PCM	TEM
Less than 10,000-square feet or 10,000-linear feet of ACM	PCM	PCM	PCM
Exceptions to the above:			
Boiler Rooms	PCM	PCM	PCM
Tent and Glovebag Procedures	PCM	PCM	PCM
Demolitions	PCM	PCM	PCM

Note: TEM is acceptable wherever PCM is required.

(G) Prior to commencement of abatement activities, the Testing Laboratory will collect a minimum number of area samples inside each homogeneous work area.

(1) Samples will be taken during normal activities and circumstances at the work site.

(2) Samplers shall be located within the proposed work area and at all proposed isolation barrier locations.

(3) Samples shall be analyzed using PCM.

(4) The number of samples to be collected will be determined by the size of the project.

(H) Area air sampling during abatement shall be conducted as specified in the following documents except as restricted or modified herein:

(1) Measuring Airborne Asbestos Following An Abatement Action, US EPA document 600/4-85-049 (Nov., 1985);

(2) Guidance For Controlling Asbestos-Containing Materials In Buildings; US EPA Publication 560/5-85-024 (June, 1984);

(3) Methodology For The Measurement Of Airborne Asbestos By Electron Microscopy, US EPA Contract No. 68-02-3266;

(4) Mandatory And Nonmandatory Electron Microscopy Methods, set forth in 40 CFR Part 763, Subpart E, Appendix A;

(5) NIOSH 7400 method using "A" counting rules.

(I) In accordance with the above criteria, area samples (see NYCDEP Asbestos Control Program Regulations) shall conform to the following schedule:

AREA SAMPLES FOR ANALYSIS BY	MINIMUM VOLUME	FLOW RATE
PCM, 25-mm cassettes	560-liters	5 to 15-liters/minute
TEM, 25-mm cassettes	560-liters	1 to 10-liters/minute
TEM, 37-mm cassettes	1,250-liters	1 to 10-liters/minute

(1) All costs resulting from additional air tests and observations shall be borne by the Contractor. These costs may include, but are not limited to, labor, analysis fees, materials, and expenses.

(2) After the area has been found to be in compliance, the Contractor may remove Isolation Barriers, tents if any and perform final cleaning as specified.

(J) Clearance And Excavation Re-entry Criteria:

(1) The clearance criteria shall be applied to each excavated work area independently.

(2) For PCM analysis, the clearance air monitoring shall be considered satisfactory when all of the samples regardless of the size of the project are less than or equal to 0.01-f/cc or the background concentrations, whichever is greater.

(3) For TEM analysis, the clearance air monitoring shall be considered satisfactory when the requirements stated in 40 CFR Part 763, Subpart E, Appendix A, Section IV are met.

(4) As soon as the air monitoring tests are completed, the Testing Laboratory will send the results of such tests to the City and notify the Contractor.

(5) The Contractor shall cooperate fully with all aspects of air monitoring operations.

79.11.1.18 TAMPERING WITH TEST EQUIPMENT

All parties to this contract are hereby notified that any tampering with testing equipment will be considered an attempt at falsifying reports and records to federal and state agencies and each offense will be prosecuted under applicable state and federal criminal codes to the fullest extent possible.

79.11.2 PRODUCTS

79.11.2.1 MATERIALS

(A) Wetting Agents: Surfactant shall consist of resin materials in a water base, that have been tested to ensure materials are nontoxic and nonhazardous. Surfactants shall be installed according to the manufacturer's written instructions.

(B) Encapsulants (Sealants, Lockdown Encapsulants): Encapsulants shall consist of pigmented (nontransparent) liquid material which can be applied to asbestos containing materials or bare surfaces exposed after an abatement which temporarily controls the possible release of asbestos fibers from the material or surface either by creating a membrane over the surface (bridging encapsulant) or by penetrating into the material and binding its components together (penetrating encapsulant). The encapsulant shall be installed according to the manufacturer's written instructions. Sealing materials to be applied to structural members and decking assemblies scheduled to receive spray-applied fireproofing shall be approved by UL for use with the specified material.

(C) Fire Retardant Polyethylene Sheeting: Minimum uniform thickness of 6-mil. Provide largest size possible to minimize seams.

(D) Fire Retardant Reinforced Polyethylene Sheeting: For covering floor of decontamination units, provide translucent, nylon reinforced or woven polyethylene laminated, fire retardant polyethylene sheeting. Provide largest size possible to minimize seams, minimum uniform thickness 6-mil.

(E) Drums: Asbestos-transporting drums, sealable and clearly marked with warning labels as required by OSHA and EPA.

(F) Polyethylene Disposal Bags: Asbestos disposal bags, minimum of 6-mil thick. Bags shall be clearly marked with warning labels as required by OSHA and EPA.

(G) Signs: Asbestos warning signs for posting at perimeter of work area, as required by OSHA and EPA.

(H) Waste Container Bag Liners And Flexible Trailer Trays: One piece leak-resistant flexible tray with absorbent pad.

(I) Tape: Provide tape which is of high quality with an adhesive that is formulated to aggressively stick to sheet polyethylene.

(J) Spray Adhesive: Provide spray adhesive in aerosol cans which is specifically formulated to stick tenaciously to sheet polyethylene.

(K) Flexible Duct: Spiral reinforced flex duct for air filtration devices.

(L) Protective Clothing: Workers shall be provided with sufficient sets of properly fitting, full-body, disposable coveralls, head covers, gloves, and 18-inch high boot-type foot covers. Protective clothing shall conform to OSHA Standard 29 CFR 1926.1101.

79.11.2.2 TOOLS AND EQUIPMENT

(A) Air Filtration Device (AFD): AFDs shall be equipped with High Efficiency Particulate Air (HEPA) filtration systems and shall be approved by and listed with Underwriter's Laboratory.

(B) Transportation Equipment: Transportation Equipment, as required, shall be suitable for loading, temporary storage, transit and unloading of contaminated waste without exposure to persons or property. Any temporary storage containers positioned outside the excavated work area for temporary storage shall be metal, closed and locked.

(C) Vacuum Equipment: All vacuum equipment utilized in the work area shall utilize HEPA filtration systems.

(D) Vacuum Attachments: Soft Brush Attachment, Asbestos Scraper Tool, Drill Dust Control Kit.

(E) Electric Sprayer: An electric airless sprayer suitable for application of encapsulating material and shall be approved by and listed with Underwriters Laboratory.

(F) Water Sprayer: The water sprayer shall be an airless or other low-pressure sprayer for amended water application.

(G) Water Atomizer: Powered air-misting device equipped with a ground fault interrupter and equipped to operate continuously.

(H) Brushes: All brushes shall have nylon bristles. Wire brushes are excluded from use due to their potential to shred asbestos fibers into small, fine fibers. Wire brushes may be used for cleaning duct joints within glove-bags upon written approval of the Engineer.

(I) Hand Power Tools: Shall be equipped with HEPA-filtered local exhaust ventilation if used to drill, cut into or otherwise disturb ACM.

(J) Other Tools And Equipment: The Contractor shall provide other suitable tools for the stripping, removal, encapsulation, and disposal activities including but not limited to: hand-held scrapers, sponges, rounded-edge shovels, brooms, and carts.

(K) Fans And Leaf Blower: Provide Leaf Blower (one leaf blower per floor) and one 20-inch diameter fans for each 10,000-cubic feet of work area volume to be used for aggressive sampling technique for clearance air testing.

(L) Fire Extinguishers: Provide type "A" fire extinguishers in spaces where there is minimal danger of electrical or grease-oil-flammable liquid fires. In other areas, provide type "ABC" dry chemical extinguishers of NFPA recommended types for the exposure in each case. All fire extinguishers shall comply with the applicable recommendations of NFPA Standard 10, "Standard For Portable Extinguishers." Provide a minimum of four (4) fire extinguishers in each work area; one in the equipment room of the decontamination unit, one outside the work area in the clean room or directly

outside same, and two fire extinguishers where they are most effective for their intended purpose. Do not exceed seventy-five (75) feet between fire extinguishers within the work area.

(M) First Aid Kits: The Contractor shall maintain adequately stocked first aid kits in the clean rooms of the decontamination units and within work areas. The first aid kit shall be approved by a licensed physician for the work to be performed under this contract.

(N) Water Service:

Water Heater: Provide UL rated 40-gallon electric water heaters to supply hot water for Personal Decontamination Enclosure System Shower. Wiring of the water heater shall comply with NEMA, NECA, and UL standards.

(O) Telephone Paging Device:

The Contractor or the Contractor's authorized representative shall, at all times during the normal workday or during periods of overtime work under this contract, carry a digital telephone paging device ("Beeper") and cellular telephones which can be activated by a telephone number in the 212 or 646 or 718 or 917 area code. The Contractor shall supply the Department of Design and Construction with the activation number for the device and the Contractor is liable to respond back to the calls from DDC within the next one (1) hour period after the Contractor receives calls from DDC. The cost for this device and all charges accruing shall be deemed included in all scheduled items of work.

79.11.2.3 CLEANING

(A) Throughout the construction period, the Contractor shall maintain the work area as described in this section.

(1) The Contractor shall prevent excavated areas other than the work area from becoming contaminated with asbestos-containing dust or debris. Should areas outside the work area become contaminated with asbestos-containing dust or debris as a consequence of the Contractor's work practices, the Contractor shall be responsible for cleaning these areas in accordance with the procedures appended in Title 15, Chapter 1 of RCNY and NYSDOL ICR56.

(2) The Contractor shall provide to all personnel and laborers the required equipment and materials needed to maintain the specified standard of cleanliness.

(B) General:

(1) Waste water from asbestos removal operations, including shower water, may be discharged into the public sewer system only after filtration by an approved device capable of at least 5-micron particle size collection to remove asbestos fibers.

(2) Asbestos wastes shall be double bagged in six (6) mil (0.006") polyethylene bags approved for ACM disposal and shall be properly labeled and handled before disposal.

(3) The Contractor shall use corrugated cartons or drums for disposal of asbestos-containing waste having sharp edged components (e.g. nails, screws, metal lathe and tin sheeting) that may tear polyethylene bags and sheeting. The waste within the drums or cartons must be double bagged.

(4) The Contractor shall transport all bags of waste to disposal site in thirty (30) gallon capacity metal or fiber drums with tight lids, or in locked steel dumpster.

(5) Dumping of debris, waste or bagged waste will not be permitted.

(6) Cleanup of visible accumulations of loose ACM shall occur whenever there is a sufficient amount to fill a single asbestos bag.

(7) ACM shall be collected utilizing rubber dust pans and rubber squeegees.

(8) HEPA vacuums shall not be used on wet materials unless specifically designed for that purpose.

(9) Metal shovels shall not be used within the work area.

(10) Accumulations of dust shall be cleaned off all surfaces of the work area daily.

(11) Mastic solvent when used will be applied in moderation (e.g. by airless sprayer).

(12) The Contractor shall retain all items in the storage area in an orderly arrangement allowing maximum access, not impeding traffic, and providing the required protection of all materials.

(13) The Contractor shall not allow accumulation of scrap, debris, waste material, and other items not required for use in this work. Asbestos contaminated waste must not be kept on the work site overnight.

(14) At least twice a week (more if necessary), the Contractor shall completely remove all scrap, debris and waste material from the job site.

(15) The Contractor shall provide adequate storage space for all items awaiting removal from the job site, observing all requirements for fire protection and concerns for the environment.

(16) All respiratory protection equipment shall be selected from the latest NIOSH Certified Equipment list.

(17) Daily and more often, if necessary, the Contractor shall inspect the work areas and adjoining spaces, and pick up all scrap, debris, and waste material. All such items shall be removed to the place designated for their storage.

(18) Weekly, and more often, if necessary, the Contractor shall inspect all arrangements of materials stored on the site; re-stack and tidy them or otherwise service them to meet the requirements of these specifications.

(19) The Contractor shall maintain the site in a neat and orderly condition at all times.

79.11.3 EXECUTION

79.11.3.1 WORKER DECONTAMINATION FACILITY

(A) Large Asbestos Projects (Small Project Option):

Provide a worker decontamination facility in accordance with, Title 15, Chapter 1, OSHA Standard 29 CFR 1926.1101, 12NYCRR Part 56 and as specified herein. Worker decontamination shall be in accordance of the NYCDEP approved procedure for removing asbestos containing duct Insulation.

(a) Structure:

(1) Use modular systems or build using wood or metal frame studs, joists, and rafters placed at a maximum of 16-inches on-center.

(2) When worker decontamination unit is located outdoors, in areas with public access, or in correctional facilities, frame work shall be lined with minimum 3/8" thickness plywood sheathing. Sheathing shall be caulked or taped airtight at all joints and seams.

(3) Interior shall be covered with two (2) layers of opaque 6-mil polyethylene sheeting, with a minimum overlap of 12-inches at seams. Seal seams airtight using tape and adhesive.

The interior floor shall be covered with two (2) layers of reinforced fire-retardant polyethylene sheeting with a minimum overlap on the walls of twelve (12) inches.

(4) Entrances to the decontamination unit shall be secured with lockable hinged doors. Doors shall be open at all times when abatement operations are in progress. Doors shall be louvered to allow for air movement through the decontamination units into work area.

(b) Curtained Doorways: A device to allow ingress or egress from one room to another while permitting minimal air movement between the rooms.

(c) Air Locks: Air locks shall consist of two curtained doorways placed a minimum of three (3) feet apart.

(d) Decontamination Enclosure System shall be placed adjacent to the work area and shall consist of three (3) totally enclosed chambers, separated from work area and each other by airlocks, as follows:

(1) Equipment Room: The equipment room shall have a curtain doorway to separate it from the work area, and share a common airlock with the shower room. The equipment room shall be large enough to accommodate at least one (1) worker (allowing them enough room to remove their protective clothing and footwear), and a 6-mil disposal bag for collection of discarded clothing and equipment. The equipment room shall be utilized for the storage of equipment and tools after decontamination using a HEPA-vacuum and/or wet cleaning. A one-day supply of replacement filters, in sealed containers, for HEPA-vacuums and negative air machines, extra tools, containers of surfactant, and other materials and equipment required for the project shall be stored here. A walk-off pan filled with water shall be placed in the work area just outside the equipment room for persons to clean foot coverings when leaving the work area. Contaminated footwear and reusable work clothing shall be stored in this room.

(2) Shower Room: The shower room shall have two (2) airlocks (one that separates it from the equipment room and one that separates it from the clean room). The shower room shall contain at least one (1) shower, with hot and cold water adjustable at the tap, per eight (8) workers. Careful attention shall be given to the shower to ensure against leaking of any kind. Contractor shall supply towels, shampoo and liquid soap in the shower room at all times. Shower water shall be drained collected, and filtered through a system with at least a 5-micron particle size collection capacity. A system containing a series of several filters with progressively smaller pore sizes shall be used to avoid rapid clogging of the filters by large particles. Filtered water shall be discharged in accordance with applicable codes. Contaminated filters shall be disposed of as asbestos waste.

(3) Clean Room: The clean room shall share a common airlock with the shower room and shall have a curtained doorway to separate it from outside noncontaminated areas. Lockers, for storage of workers' street clothing, and shelves, for storing respirators, shall be provided in this area. Clean disposable clothing, replacement filters for respirators, and clean dry towels shall be provided in the clean room. The clean room shall not be used for the storage of tool, equipment or other materials.

(B) Small Asbestos Projects:

Provide a worker decontamination facility in accordance with, Title 15, Chapter 1, OSHA Standard 29 CFR 1926.1101, 12NYCRR Part 56 and as specified herein. Unless approved by NYCDEP and the City, worker decontamination facilities shall be attached to the work areas.

(a) Structure:

(1) Use modular systems or build using wood or metal frame studs, joists, and rafters placed at a maximum of 16-inches on-center.

(2) When worker decontamination unit is located outdoors, in areas with public access, or in correctional facilities, frame work shall be lined with minimum 3/8" thickness plywood sheathing. Sheathing shall be caulked or taped airtight at all joints and seams.

(3) Interior shall be covered with two (2) layers of opaque 6-mil polyethylene sheeting, with a minimum overlap of 12-inches at seams. Seal seams airtight using tape and adhesive. The interior floor shall be covered with two (2) layers of reinforced fire-retardant polyethylene sheeting with a minimum overlap on the walls of twelve (12) inches.

(4) Entrances to the decontamination unit shall be secured with lockable hinged doors. Doors shall be open at all times when abatement operations are in progress. Doors shall be louvered to allow for air movement through the decontamination units into work area.

(b) Curtained Doorways: A device to allow ingress or egress from one room to another while permitting minimal air movement between the rooms.

(c) Air Locks: Air locks shall consist of two (2) curtained doorways placed a minimum of three (3) feet apart.

(d) Decontamination Enclosure System shall be placed adjacent to the work area and shall consist of three (3) totally enclosed chambers, separated from work area and each other by airlocks, as follows:

(1) Shower Room: The shower room shall have two (2) airlocks (one that separates it from the work area and one that separates it from the clean room). The shower room shall contain at least one (1) shower, with hot and cold water adjustable at the tap, per eight (8) workers. Careful attention shall be given to the shower to ensure against leaking of any kind. The Contractor shall supply towels, shampoo and soap in the shower room at all times. Shower water shall be drained collected, and filtered through a system with at least a 5-micron particle size collection capacity. A system containing a series of several filters with progressively smaller pore sizes shall be used to avoid rapid clogging of the filters by large particles. Filtered water shall be discharged in accordance with applicable codes. Contaminated filters shall be disposed of as asbestos waste.

(2) Clean Room: The clean room shall share a common airlock with the shower room and shall have a curtained doorway to separate it from outside noncontaminated areas. Lockers, for storage of workers' street clothing, and shelves, for storing respirators, shall be provided in this area. Clean disposable clothing, replacement filters for respirators, and clean dry towels shall be provided in the clean room. The clean room shall not be used for the storage of tools, equipment or other materials.

(C) Decontamination Enclosure System Utilities: Lighting, heat, and electricity shall be provided as necessary by the Contractor, and as specified herein.

79.11.3.2 WASTE DECONTAMINATION FACILITY

(A) Large Asbestos Project (Small Project Option):

Provide a worker decontamination facility in accordance with, Title 15, Chapter 1, OSHA Standard 29 CFR 1926.1101, 12NYCRR Part 56 and as specified herein. Unless approved by NYCDEP and the City, worker decontamination facilities shall be attached to the work areas.

(a) Structure:

(1) Use modular systems or build using wood or metal frame studs, joists, and rafters placed at a maximum of 16-inches on-center.

(2) When worker decontamination unit is located outdoors, in areas with public access, or in correctional facilities, frame work shall be lined with minimum 3/8" thickness plywood sheathing. Sheathing shall be caulked or taped airtight at all joints and seams.

(3) Interior walls shall be covered with two (2) layers of opaque 6-mil polyethylene sheeting, with a minimum overlap of 12-inches at seams. Seal seams airtight using tape and adhesive. The interior floor shall be covered with two (2) layers of reinforced fire-retardant polyethylene sheeting with a minimum overlap on the walls of twelve (12) inches.

(4) Entrances to the decontamination unit shall be secured with lockable hinged doors. Doors shall be open at all times when abatement operations are in progress. Doors shall be louvered to allow for air movement through the decontamination units into the work area.

(b) Curtained Doorways: A device to allow ingress or egress from one room to another while permitting minimal air movement between the rooms.

(c) Air Locks: Air locks shall consist of two (2) curtained doorways placed a minimum of three (3) feet apart.

(d) Decontamination Enclosure System shall be placed adjacent to the work area and shall consist of three (3) totally enclosed chambers, separated from the work area and each other by airlocks, as follows:

(1) Washroom: An equipment washroom shall have two (2) air locks (one separating the unit from the work area and one common air lock that separates it from the holding area. The washroom shall have facilities for washing material containers and equipment. Gross removal of dust and debris from contaminated material containers and equipment shall be accomplished in the work area, prior to moving to the washroom.

(2) Holding Area: A holding area shall share a common air lock with the equipment washroom and shall have a curtained doorway to outside areas. A hinged, lockable door shall be placed at the holding area entrance to prevent unauthorized access into the work area.

(B) Decontamination Enclosure System Utilities: Lighting, heat, and electricity shall be provided as necessary by the Contractor, and as specified herein.

79.11.3.3 PERSONNEL ENTRANCE AND DECONTAMINATION PROCEDURES FOR REMOVAL OPERATIONS UTILIZING REMOTE DECONTAMINATION FACILITIES

(A) All individuals who enter the work area shall sign the entry log, located in the clean room, upon each entry and exit. The log shall be permanently bound and shall fully identify the facility, agents, contractor(s), the project, each work area, and worker respiratory protection employed. The job supervisor shall be responsible for the maintenance of the log during the abatement activity.

(B) Each worker shall remove street clothes in the clean room; wear two (2) disposable suits, including gloves, hoods and non-skid footwear; and put on a clean respirator (with new filters) before entering the work area.

(C) Each worker shall, before leaving the work area or tent, clean the outside of the respirators and outer layer of protective clothing by wet cleaning and/or HEPA-vacuuming. The outer disposable suit shall be removed in the airlock prior to proceeding to the Worker Decontamination Unit. The inner disposable suit and respirator shall be wet wiped and HEPA-vacuumed thoroughly before removing and prior to aggressive shower.

(D) Following showering and drying off, each worker or authorized visitor shall proceed directly to the clean room, dress in street clothes, and exit the decontamination enclosure system immediately.

79.11.4 PREPARATION OF WORK AREA AND REMOVAL PROCEDURES

79.11.4.1 REMOVAL OF ASBESTOS-CONTAINING MATERIAL

(A) Contractor shall be responsible for the proper removal of ACM from the work area using standard industry techniques. The Testing Laboratory representative shall observe the work.

General Requirements:

(a) Removal of ACM shall be performed using wet methods. Dry removal of ACM is prohibited.

(b) Spray ACM with amended water with sufficient frequency and quantity to enhance penetration. Sufficient time shall be allowed for amended water to penetrate the material to the substrate prior to removal. All ACM shall be thoroughly wetted while work is being conducted.

(c) Accumulation of standing water on the floor of the work area is prohibited.

(d) Apply removal encapsulants, when used, in accordance with the manufacturer's recommendations and guidelines.

(e) Containerize ACM immediately upon detachment from the substrate.

(f) Pre-Removal Inspections:

(1) Prior to removal of any ACM, the Contractor shall notify the Testing Laboratory and request a pre-removal inspection. Posting of warning signs, building of decontamination enclosure systems, and all other preparatory steps have been taken prior to notification of the Testing Laboratory.

(2) Contractor shall correct any deficiencies observed by Testing Laboratory at no additional cost to City.

(3) Following the Testing Laboratory's approval of the work area preparations, removal of ACM may commence.

(B) Removal of Duct Insulation shall be as follows:

Work shall be performed as outlined in the Duct Insulation removal procedures (see Appendix) approved by the New York City Department of Environmental Protection (NYCDEP).

79.11.4.2 MAINTENANCE OF CONTAINED WORK AREA AND DECONTAMINATION ENCLOSURE SYSTEMS

(A) Ensure that barriers are installed in a manner appropriate to the expected weather conditions during the project and for its duration. Repair damaged barriers and remedy defects immediately upon their discovery. Visually inspect barriers at the beginning and end of each work period.

(B) Visually inspect nonwork areas and the decontamination enclosure system for water leakage. Perform the visual inspection a minimum of two (2) times for each 8-hour work shift.

79.11.5 ASBESTOS WASTE MANAGEMENT

79.11.5.1 ACM WASTE REQUIREMENTS

(A) The Contractor and all subcontractors are specifically alerted to the illegal practice of combining asbestos-containing waste (ACW) from one project with the ACW of other projects without using the services of a permitted waste transfer station as defined by 6 NYCRR Part 360 and 364. As part of the shop drawing submittals, the Contractor must submit for approval the proposed method of transportation and disposal that will be utilized to manage the ACW of this contract. If a permitted transfer station is to be used, payment for the cost shall be made under the item labeled "ALLOWANCE FOR ASBESTOS ABATEMENT WORK PERFORMED ON EXISTING TRANSIT AUTHORITY DUCT INSULATION (REMOVAL OF ACM, REPLACEMENT WITH NON-ACM, AND SUPPORT AND PROTECTION OF EXISTING TRANSIT AUTHORITY DUCT, COMPLETE)". The Contractor must submit a waste manifest consistent with whatever approved method is utilized as part of the invoicing and payment procedures.

(B) The Contractor shall maintain compliance with the strictest set of regulations of Title 15, Chapter 1 of RCNY, NYC LL 70/85, NYS DOL ICR 56, USEPA, Asbestos Regulation 40 CFR Section 61.152, 29 CFR 1926.1101, 29 CFR 1910.1200 (F) of OSHA's Hazard Communication Standards, and other applicable standards.

NOTE: Any penalties incurred for failure to comply with any of the above regulations and/or fines imposed due to negligence of the Contractor will be the sole responsibility of the Contractor.

When presenting ACW for storage at the generation site, the Contractor shall:

(1) Wet down ACW in a manner sufficient to prevent all visible emissions of dust into the air.

(2) Seal material in a leak tight container while wet.

(3) Keep ACW separate from any other waste.

(C) When presenting ACW for storage away from the site of generation, the Contractor shall:

(1) Ensure that ACW has been properly packaged as per requirements above.

(2) Examine the containers of ACW to ensure that there are no breaks in the containers and that no visible dust is being released into the air.

(3) If examination reveals damage to a container of ACW the Contractor or person accepting the waste shall immediately wet down the ACW and repackage it into a clean leak tight container. The subsequent repackaging shall be the financial responsibility of the Contractor and occur at no cost to the City.

(4) Keep ACW separate from any other waste.

(D) When storing ACW - The Contractor shall:

(1) Ensure that the ACW has been sufficiently wetted down in tight containers.

(2) Rewet and repackage any damaged containers.

(3) Maintain at storage site an adequate supply of spare leak tight containers.

(4) Maintain at storage site an adequate supply of amended water.

(5) Keep ACW separate from any other waste.

(6) Keep ACW in a secured, enclosed, and locked container.

(7) If the Contractor has intention of sorting a quantity of ACW greater than or equal to 50-cubic yards, the Contractor shall:

Submit a written request and receive written approval from the City.

(E) When presenting for transport, the Contractor shall:

(1) Ensure that ACW has been sufficiently wetted down.

(2) Examine the integrity of the container's airtight seal.

(3) Rewet and repackage any damaged containers.

(4) Keep ACW separate from all other waste.

(5) Ensure that a person transporting asbestos waste holds a valid permit issued pursuant to law.

(6) Frequency of waste removal:

Properly packaged and labeled asbestos waste shall be removed from the site on a daily basis. Under no circumstance shall asbestos waste be stored on site without written approval from the City. The Waste Hauler and landfill shall be as indicated on the notifications to regulatory agencies.

(F) Waste Load-Out Through Equipment Decontamination Enclosure (Full Decontamination Facility): Place asbestos waste in disposal bags. Large items not able to fit into disposal bags shall be insulationped in one (1) layer of 6-mil thick polyethylene sheeting. Clean outer covering of asbestos waste package by wet cleaning and/or HEPA-vacuuming in a designated part of the work area. Move insulationped asbestos waste to the equipment washroom, wet clean each bag or object and place it inside a second disposal bag, or a second layer of 6-mil polyethylene sheeting, as the item's physical characteristics demand. Air volume shall be minimized, and the bags or sheeting shall be sealed airtight with tape.

(1) The clean containerized items shall be moved to the equipment decontamination enclosure holding area pending load-out to storage or disposal facilities.

(2) Workers who have entered the equipment decontamination enclosure system from the uncontaminated nonwork area shall perform load-out of containers from the decontamination enclosure holding area. Dress workers moving asbestos waste to storage or disposal facilities in clean overalls of a color different than from that of coveralls used in the work area. Ensure that workers do not enter from uncontaminated areas into the equipment washroom or the work area. Ensure that contaminated workers do not exit the work area through the equipment decontamination enclosure system.

(3) Thoroughly clean the equipment decontamination enclosure system immediately upon completion of the waste load-out activities, and at the completion of each work shift.

(4) Labeled ACM waste containers or bags shall not be used for non-ACM debris or trash. Any materials placed in labeled containers or bags, including those turned "inside-out", shall be handled and disposed of as ACM waste.

(G) All asbestos materials, wastes, shower water, polyethylene, disposable equipment and supplies shall be disposed of as contaminated waste, in accordance with the EPA regulation (40 CFR, Section 61.150) and those requirements of the New York Department of Environmental Conservation and New York City Department of Sanitation.

(H) All asbestos materials shall be prepared for transportation in accordance with this specification and all applicable Federal, State, County and City Regulations. The Contractor shall submit the following documentation:

(1) Where applicable, an EPA Generator's identification number which has been obtained from the EPA for all asbestos waste generated from the project.

(2) Applicable State Waste Hauler license and registration numbers.

(3) Federal Hazardous Materials Waste Hauler number.

(4) Designated landfill EPA Permit numbers.

(I) Prior to loading asbestos waste the enclosed cargo areas (dumpster) shall be prepared as follows:

(1) Clean via HEPA-vacuum and wet wipe techniques the enclosed cargo areas of all visible debris prior to preparing with polyethylene.

(2) Line the cargo area with two (2) layers of 6-mil polyethylene sheeting to prevent contamination from damaged or leaking containers. Floor sheeting shall be installed first and extend up the walls a minimum of 24-inches. Wall sheeting shall be overlapped and taped securely into place.

(J) Asbestos-containing waste shall be placed on level surfaces in the cargo area of the dumpster and shall be packed tightly to prevent any shifting or tipping of the waste during transportation.

(K) Asbestos-containing waste shall not be thrown into or dropped from the dumpster. All material shall be handled carefully to prevent rupture of the containers.

(L) All personnel engaged in handling and loading of contaminated waste outside of the work area shall wear protective clothing. The disposable clothing shall include head, body and foot protection and color of clothing shall be different from abatement personnel in the work area. Minimum respiratory protection shall be half face, dual cartridge, air purifying respirators with HEPA-filters.

(M) The Contractor shall immediately clean debris or residue observed on containers or surfaces outside of the work area. Cleaning shall be via HEPA equipped wet/dry vacuums only.

(N) All asbestos-containing waste shall be transported from the abatement site to the landfill by a registered Waste Hauler. When transporting ACW:

(1) Ensure that the ACW has been sufficiently wetted down in a leak tight container.

(2) Rewet and repackage any damaged containers.

(3) Maintain at storage site an adequate supply of spare leak tight containers.

(4) Maintain at storage site an adequate supply of amended water.

(5) Keep ACW separate from any other waste.

(O) Keep ACW in a secured, enclosed, and locked container.

(P) Waste transport documents shall conform to the requirements of the U.S. Department of Transportation, Hazardous Materials Transportation Regulation, 49 CFR Part 173 and EPA 40 CFR 61.150 (d)(1)(2). Shipping documents shall be clearly marked with the required designation "RQ Asbestos". The Contractor shall provide a copy of this document to the City.

(Q) A uniform hazardous waste manifest shall be prepared by the Contractor and signed by the Contractor each time the Contractor ships a dumpster load of Asbestos-Containing Waste Material. The uniform hazardous waste manifest shall include the site of waste generation, the names and addresses of the Transporter, the Contractor, and the landfill operator with information on the type and number of asbestos-waste containers, time and date. The Contractor shall provide the Engineer,

Testing Laboratory or authorized designated representative with signed copies of the waste manifest before each departure.

(R) The Contractor or the Contractor's registered hazardous Waste Hauler shall transport asbestos-containing waste material from the abatement site directly to the specified disposal site. The Contractor or Waste Hauler shall not accept material from any other site when transporting asbestos-containing waste material from the abatement site. The authorized DDC representative or Engineer reserves the right to travel with Contractor's Waste Hauler to the waste disposal site. No intermediate storage of waste material (i.e. Contractors warehouse) shall be permitted.

(S) Final or progress application for payments will not be processed unless all hazardous waste manifests generated to date have been received and reviewed by the Engineer.

(T) All asbestos materials, wastes, shower water, polyethylene disposable equipment and supplies shall be disposed of as contaminated waste, in accordance with the EPA regulation (40 CFR, Section 61.150) and those requirements of the New York State Department of Environmental Conservation and the New York Department of Sanitation.

(U) The Contractor shall transport all sealed drums to a landfill disposal site approved by the Department of Environmental Conservation and the EPA. Transportation shall be performed by a New York State registered Waste Hauler, where required. When presenting the ACW for disposal the Contractor or subcontractor shall:

(1) Ensure that waste container is properly labeled according to the National Emission Standard for Hazardous Air Pollutants (NESHAP); Asbestos Revision, 40 CFR, Part 61, Subpart M. The labels shall include the name of the waste generator and the location where the waste was generated.

(2) Comply with all applicable orders issued pursuant to asbestos disposal.

(3) Ensure that ACW has been sufficiently wetted down.

(4) Rewet and repackage any damaged containers.

(5) Keep ACW separate from all other wastes.

(V) The Contractor shall notify the waste disposal site, at least 24-hours prior to transportation of contaminated waste to be delivered. The Contractor shall determine if a larger notification period is required.

(W) At the site, the Contractor or Waste Hauler trucks shall approach the dump location as close as possible for unloading asbestos waste. Containers shall be carefully placed in the ground. Do not throw containers from truck.

(X) The Contractor or Waste Hauler shall inspect containers as they are unloaded at the disposal site. Material in damaged containers shall be repacked in empty containers, as necessary.

(Y) The Contractor or Waste Hauler shall not remove asbestos-containing waste material from drums unless required to do so by the disposal site City. Used drums shall be disposed of as asbestos-contaminated waste.

(Z) All personnel engaged in unloading of the containers at the waste site shall wear protective clothing. The disposable clothing shall include head, body and foot protection. Minimum respiratory protection shall be half face, dual cartridge, air purifying respirators with HEPA-filters. Workers shall remove their protective clothing at the disposal site, place it in labeled disposal bags and leave them with the deposited waste shipment.

(AA) For the compaction operation, the Contractor shall ensure that disposal sites personnel have been provided with personal protective equipment by the disposal operator. If the disposal site City has not provided this protective equipment, the Contractor shall supply protective clothing and respiratory protection for the duration of this operation (PAPR respirators are mandatory).

(BB) If containers are broken or damaged, the Contractor or Waste Hauler shall, using personnel who are properly trained and wearing proper protective equipment, shall repackage the waste in properly labeled containers. The Contractor shall then clean the entire truck and its contents using HEPA-vacuums and wet cleaning techniques until no visible residue is observed.

(CC) Following the removal of all containerized waste, the Contractor shall decontaminate the truck cargo area using HEPA-vacuums and/or wet cleaning techniques until no residue is observed. All 6-mil polyethylene sheeting shall be removed and discarded as asbestos-containing waste material along with contaminated cleaning material and protective clothing, in containers at the disposal site.

(DD) The transporter(s) of all asbestos waste shall not back-haul any items on returning from landfill/disposal site.

(EE) All asbestos waste shall be disposed of in an approved Asbestos Landfill site only.

(1) NO PERSON UNDER ANY CIRCUMSTANCES SHALL ABANDON A.C.W. The same shall be disposed of only by certified persons in approved landfills.

(2) A manifest form will be signed by the Landfill documenting receipt and acceptance of the asbestos-containing waste. This manifest will be furnished to the City of New York.

(3) It is the responsibility of the Asbestos Contractor to determine current waste handling, transportation and disposal regulations for the work site and for each waste disposal landfill. The Asbestos Contractor must comply fully with these regulations and all appropriate U.S. Department of Transportation, EPA and other Federal, State and Local entities' regulations and all other current legal requirements.

(4) The Asbestos Contractor shall obtain an agreement from the transporter(s) that the practice of "Back-Hauling" will not be engaged in, with respect to any and all waste loads taken from this site during the work.

(5) The Asbestos Contractor will document actual disposal of the waste at the designated landfill by having completed a Disposal Certificate and will provide a copy of the same to the Department of Design and Construction.

79.11.6 ACCEPTANCE

79.11.6.1 ACCEPTANCE

(A) Upon satisfactory completion of all decontamination procedures, a certificate will be issued by the Engineer with copies to all parties.

(B) A Letter Of Compliance stating that all the work on the project was performed in accordance with the specifications and all applicable Federal, State and Local regulations.

(C) All warranties as stated in the specifications.

79.11.7 MEASUREMENT AND PAYMENT

All costs associated with the work required by this specification for the removal and disposal of ACM and asbestos-contaminated duct insulation from existing Transit Authority duct that are exposed, the replacement of the removed ACM insulation with a Transit Authority approved non-asbestos containing

materials insulation, and the support and protection of the existing Transit Authority duct that are exposed and to remain in service at all times as required by these contract documents will be paid on a Time and Material basis in accordance with **Articles 25 and 26** of the Contract except as amended herein. Payment will be made under the item labeled "ALLOWANCE FOR ASBESTOS ABATEMENT WORK PERFORMED ON EXISTING TRANSIT AUTHORITY DUCT INSULATION (REMOVAL OF ACM, REPLACEMENT WITH NON-ACM, AND SUPPORT AND PROTECTION OF EXISTING TRANSIT AUTHORITY DUCT, COMPLETE)". This item shall be used exclusively for the costs associated with the removal and disposal of ACM and asbestos-contaminated duct insulation from existing Transit Authority duct that are exposed, the replacement of the removed ACM insulation with a Transit Authority approved non-asbestos containing materials insulation, and the support and protection of the existing Transit Authority duct that are exposed and to remain in service at all times as required by these contract documents.

No guarantee is given that this allowance for additional costs associated with the work required for the removal and disposal of ACM and asbestos-contaminated duct insulation from existing Transit Authority duct that are exposed, the replacement of the removed ACM insulation with a Transit Authority approved non-asbestos containing materials insulation, and the support and protection of the existing Transit Authority duct that are exposed and to remain in service at all times as required by these contract documents will in fact be required in this contract. The estimated price in the Bid Schedule is included in the total bid solely to insure a method of payment for performing this work as directed by the Engineer.

Payment made under this item shall be equal to the sum total of all vouchers submitted by the Contractor as payment for the cost of performing this work as approved by the Engineer. Payment under this item, including partial payments, will not be made until the Contractor has furnished satisfactory evidence to the Engineer that the Contractor has performed the work.

The voucher for the payment shall be submitted to the Engineer on a monthly basis.

The "fixed sum" in the Bid Schedule is for bidding purposes only and shall not be varied in the bid; however, the Contractor will be paid only for the actual work performed regardless of the fixed sum, which may be more or less than the amount fixed in the Bid Schedule.

Payment for Allowance For Asbestos Abatement Work Performed On Existing Transit Authority Duct Insulation (Removal Of ACM, Replacement With Non-ACM, And Support And Protection Of Existing Transit Authority Duct, Complete) will be made under the Item Number as calculated below:

The Item Number for Allowance For Asbestos Abatement Work Performed On Existing Transit Authority Duct Insulation (Removal Of ACM, Replacement With Non-ACM, And Support And Protection Of Existing Transit Authority Duct, Complete) has seven characters. (The decimal point is considered a character, the third character.)

(1) The first five characters shall define Allowance For Asbestos Abatement Work Performed On Existing Transit Authority Duct Insulation (Removal Of ACM, Replacement With Non-ACM, And Support And Protection Of Existing Transit Authority Duct, Complete):

79.11

(2) The sixth, seventh, eighth and ninth characters shall define Allowance For Asbestos Abatement Work Performed On Existing Transit Authority Duct Insulation (Removal Of ACM, Replacement With Non-ACM, And Support And Protection Of Existing Transit Authority Duct, Complete):

AATA - Allowance For Asbestos Abatement Work Performed On Existing Transit Authority Duct Insulation (Removal Of ACM, Replacement With Non-ACM, And Support And Protection Of Existing Transit Authority Duct, Complete)

(3) The Item Number together with Description and Pay Unit as provided in the Bid Schedule is provided below:

Item No.	Description	Pay Unit
79.11AATA	ALLOWANCE FOR ASBESTOS ABATEMENT WORK PERFORMED ON EXISTING TRANSIT AUTHORITY DUCT INSULATION (REMOVAL OF ACM, REPLACEMENT WITH NON-ACM, AND SUPPORT AND PROTECTION OF EXISTING TRANSIT AUTHORITY DUCT, COMPLETE)	F.S.

APPENDIX

NYCDEP ATTACHMENTS

NYC DEP Asbestos Control Program VAR #_____

ATTACHMENT TM
REQUIREMENTS FOR MODIFIED TENT PROCEDURES (FOR GROSS ABATEMENT)
APPLIES TO VARIANCES FROM TITLE 15, CHAPTER 1, RULES OF THE CITY OF NEW YORK, SECTIONS 1-81(m) AND 1-91(c) {15 RCNY § 1-81(m) AND § 1-91(c)}

1. All tent enclosures and contiguous spaces within a radius of 10 feet shall be roped off and regulated to allow only certified workers and authorized visitors to enter.

2. 15 RCNY § 1-106 shall be complied with except that
   i. all tents shall be lined with 2 layers of plastic sheeting (6-mil thickness at a minimum);
   ii. the amounts of ACM that may be abated in each modified tent shall **NOT EXCEED** (a) 160 square feet and/or (b) 260 linear feet.
   iii. the total amount of ACM that may be abated at any one time in several modified tents shall **NOT EXCEED** 1,000 combined square feet plus linear feet.

3. All modified tents shall be fully framed (including horizontally across the top, if applicable) with 2x3 (minimum) wood or metal studs spaced not more than 36 inch center-to-center vertically around all sides (except at the entry/exit which shall not exceed 36 inch width); and

4. A minimum of one air volume change per 15 minutes through each modified tent shall be maintained.

5. An airlock having at least 3 feet length between the two curtained doorways shall be constructed at the entrance to each and every tent if the decontamination unit is not attached to the tents, and

6. If a decontamination unit is not attached to each tent, located within each airlock there shall be extra clean and uncontaminated disposable protective suits (e.g.Tyveks), and one such clean suit shall be worn by each worker in the airlock, immediately after removal of the outer suit as per 15 RCNY § 1-106(k), before each worker exits any airlock.

7. Any decontamination unit that is not attached to a tent (i.e. that is remote from a tent) shall be constructed in compliance with the requirements of Attachment D and must be located on the same floor as the modified tents.

8. Decontamination units that are attached to tents shall comprise at least a shower room and a clean room, with one curtained doorway separating them, and with a second curtained doorway separating the tent from the shower room.

9. After the ACM removal and bagging [refer 15 RCNY § 1-106(f) and (g)], the bagged waste shall be HEPA-vacuumed then wet cleaned and transferred into the airlock or into the shower room (as per Items 5 and 8 above respectively) for double bagging, and thereafter the double-bagged waste shall be transferred outside the airlock or outside the clean room for its final transfer to storage in a holding area and/or to legal means of disposal.

10. If the integrity of the tent is compromised and/or visible emissions are detected outside the tent and/or levels exceed 0.01 f/cc work shall stop and 15 RCNY § 1-45(a) shall be complied with immediately. Post-abatement clearance air samples shall be required in the areas outside the tent.

11. A minimum of 3 during area air samples and 3 post abatement clearance air samples must be taken in compliance with section 1-41 of the NYC DEP Asbestos Regulation for each modified tent.

NOTE: This attachment may be revised at any time by the Department.

TRU/JM 04/2005

ATTACHMENT D
REMOTE WORKER DECONTAMINATION UNIT

APPLIES TO VARIANCE FROM TITLE 15, CHAPTER 1, RULES OF THE CITY OF NEW YORK SECTIONS 1-82(a) AND 1-83(a)* {15 RCNY § 1-82(a) AND § 1-83(a)*}.

1. The remote worker decontamination unit shall be constructed outside the work area, in accordance with 15 RCNY § 1-82, and attached to individual glovebag work areas (or tents) or common space leading to individual work areas.

2. The remote worker decontamination unit shall consist of, at least, a shower room, and a clean room separated from each other by an airlock and from the glovebag work area.

3. In addition to the shower heads, the shower room shall be provided with a flexible hose for equipment and waste decontamination.

4. The remote holding area for the asbestos containing waste shall comply with Title 16, Chapter 8, Rules of the City of New York (16RCNY 8 ET SEQ.)

5. The decontamination unit shall be maintained in accordance with 15 RCNY § 1-94 (except sub-section b).

6. All asbestos handlers shall wear two disposable suits, including gloves, hood and footwear, and appropriate respiratory equipment, after removing street clothes in the clean room, and must exit from the shower room.

7. Each worker, before leaving the glovebag work area (or tent), shall clean the outside of the respirators and outer protecting clothing by wet cleaning and/or HEPA vacuuming. The outer disposable suit shall be removed in the work area and the workers shall then proceed to the shower room. The inner disposable suit and respirator shall be washed thoroughly before removing and prior to aggressive shower.

8. After the ACM removal and bagging {refer 15 RCNY § 1-105(c)15}, the bagged waste shall be HEPA-vacuumed and then transferred to the shower room for wet cleaning and double bagging, prior to storage and disposal.

9. Worker and waste decontamination cannot take place at the same time and decontamination system shall be in place for the entire duration of the abatement activities.

10. The following additional conditions must be complied with in order to re-use an attached decontamination enclosure system(s) as a remote decontamination unit.

    i) Final air clearance must be achieved in the full containment area to which the decontamination enclosure system(s) is attached.

    ii) The decontamination enclosure system(s) shall be re-plasticized in accordance with 15 RCNY § 1-82.

*Required for projects disturbing 1,000 or more linear feet.

NOTE: This attachment may be revised at any time by the Department.

TRU/JM 4/2005

ATTACHMENT
ASBESTOS CONTAINING DUCT INSULATION REMOVAL PROCEDURE

The work procedure to be utilized for the removal of asbestos containing duct insulation shall be as follows:

I. Personal Protective Equipment

Prior to beginning work, all workers performing the removal of the duct insulation must equip themselves with the proper personal protective equipment (PPE). The PPE required for the removal of duct insulation includes:

(1) Tyvek suit with boot protection ("booties").
(2) Disposable gloves (latex ornitrile).
(3) Eye protection.
(4) Half face respirator with HEPA cartridges.

In addition to the PPE listed above, the tools and materials which will be required for this operation shall include the following:

(1) Amended water solution.
(2) 6-mil plastic sheeting.
(3) 6-mil plastic asbestos disposal bags.
(4) Disposable rags or wipes.
(5) Duct tape.
(6) Hand tools (chipping hammer, chisel, scraper, putty knife).
(7) Abrasive pads.
(8) Asbestos barrier tape.

NOTE: No power tools, grinders, sanders, or burning apparatus can be used to remove duct insulation.

II. Work Procedure

(A) Removal:

The following work procedure shall be employed when removing duct insulation:

(1) Set up the asbestos barrier tape around the perimeter of the excavation.
(2) Place 6-mil plastic sheeting under the duct to collect loose debris.
(3) Wet down duct insulation with amended water.
(4) Use hand tools to break away the large chunks of duct insulation. Place the removed insulation in a plastic asbestos disposal bag.
(5) Remove the amount of insulation around the required area of the duct necessary to perform the work associated with the installation of the trunk water main - the Engineer shall provide all markouts and make the final determination on quantities requiring removal.
(6) Ensure that the intact duct insulation on the duct is not damaged when performing the removal of materials from the excavation.
(7) For sections of duct left in the ground, seal all ends of exposed insulation with duct tape. Plastic insulation and duct tape on all coated duct will be removed from the site.
(8) In the event that some insulation material did not fall onto the plastic sheeting, collect these pieces and place them on the sheeting.
(9) Once duct insulation removal is completed and the exposed ends are sealed, fold the plastic sheeting onto itself and place it in a properly labeled asbestos bag.
(10) Wet wipe all equipment with amended water and rags before removal from work area. Place used rags and old work gloves in asbestos disposal bags.
(11) Ensure that bagged ACM is wet prior to transportation.

(12) ACM shall be properly labeled in accordance with OSHA Regulations 29 CFR 1926 58K(2), and shall be kept wet until disposal in compliance with Title 15, Chapter 1, Rules of the City of New York (15RCNY 1).

(B) Disposal:

The following work procedure shall be employed when disposing Duct Insulation:

(1) Double bag all waste materials. The inside and outside bags must have an asbestos label with the work location identified.
(2) Complete an asbestos waste tracking form and attach it to the bag.
(3) Place double bagged waste in a truck and transport it to an approved New York State asbestos landfill.
(4) All ACM waste bags must be picked up and disposed of on a daily basis at the end of each shift.

END OF THIS SECTION
This Section consists of forty-five (45) pages.

NO TEXT ON THIS PAGE

SPECIFICATIONS FOR HANDLING, TRANSPORTATION AND DISPOSAL OF NONHAZARDOUS AND POTENTIALLY HAZARDOUS CONTAMINATED MATERIALS

NOTICE

THE PAGES CONTAINED IN THIS SECTION ARE ISSUED FOR THE PURPOSE OF SPECIFYING THE REQUIREMENTS OF THE CONTRACT DOCUMENTS AND HEREBY MADE PART OF SAID CONTRACT DOCUMENTS.

(NO TEXT ON THIS PAGE)

SPECIFICATIONS FOR HANDLING, TRANSPORTATION AND DISPOSAL OF NON-HAZARDOUS AND POTENTIALLY HAZARDOUS CONTAMINATED MATERIALS

Rehabilitation of Astoria Trunk Water Main

Borough of Queens

DDC Project No. QED1014

Prepared By:

Department of Design and Construction

30-30 Thomson Avenue, 3rd Floor
Long Island City, New York 11101

Date: 12/31/2015

HAZ-1

Table of Contents

Attachments

1. New York City Department of Environmental Protection Limitations for Effluent to Storm-Sanitary or Combined Sewers Parameters
2. Applicable Regulations
3. Definitions
4. Phase II Subsurface Corridor Investigation Report

ITEM 8.01 C1 HANDLING, TRANSPORTING AND DISPOSAL OF NON-HAZARDOUS CONTAMINATED SOILS

8.01 C1.1 WORK TO INCLUDE

General: This work shall consist of the handling, transportation and disposal of non-hazardous contaminated soils. The materials covered by this specification are soils that are contaminated with petroleum or chemical products but cannot be classified as hazardous waste. For the purpose of this specification, soil shall be defined as any material excavated below the pavement and base for pavement.

Non-hazardous contaminated soils are defined as soils exhibiting one or more of the following characteristics:

- Elevated Photo-Ionization Detector (PID) readings, subsequently confirmed by lab analysis
- Visual evidence of contamination
- Petroleum and/or chemical odors
- Soils that have been documented as contaminated in previous environmental reports

Non-hazardous contaminated soils must be stockpiled at an off-site approved location or secured on-site by the Contractor, meeting all required Federal, State and Local stipulations. Sampling and laboratory analysis must be conducted to determine if the soils are hazardous, unless the alternative procedure as defined under subsection 8.01 C1.1 A.5 has been agreed upon by treatment facilities. Contaminated soils determined to be non-hazardous shall be handled in accordance with the specifications herein for Item 8.01 C1. Contaminated soils determined to be hazardous shall be handled in accordance with the specifications for Item 8.01 H – Handling, Transporting and Disposal of Hazardous Soils.

The Contractor shall retain the services of an independent Environmental Consultant, as specified under Item 8.01 S – Health and Safety, to oversee the work required under this Item.

Non-hazardous soils shall be delivered to the disposal or treatment facility within thirty (30) calendar days after excavation.

The Contractor shall conduct sampling and analysis of the impacted soils as specified under Item 8.01 C2 – Sampling and Testing of Contaminated/Potentially Hazardous Soils for Disposal Parameters. The laboratory results shall be forwarded to DDC Program Management, Office of Environmental and Geotechnical Services (OEGS) for review to determine if the soils will be handled and disposed of as contaminated regulated soils or hazardous waste. No other soils shall be sampled or tested without the DDC's approval or direction.

The Contractor shall ensure that all operations associated with the handling, sampling, loading, transportation, and disposal of non-hazardous contaminated soils are in compliance with all applicable Federal, State, and City statutes and regulations.

The Contractor shall document the excavation, handling, transportation and disposal of non-hazardous contaminated soils. The Contractor shall supply all equipment, material and labor required to conduct the specified work of this Item.

A. Material Handling Plan: Within forty-five (45) calendar days after award of Contract, the Contractor shall submit to the Program Management, OEGS for review, a Material Handling Plan (MHP). The MHP must be approved by the Program Management, OEGS, prior to the Contractor's commencement of work. The MHP shall, at a minimum, consist of:

   1. The Contractor's procedures for identifying non-hazardous contaminated soils during excavation, including the specific model and manufacturer of intended organic vapor

HAZ - 3

monitoring equipment and calibration procedures to be used. It should also include the training and experience of the personnel who will operate the equipment.

1. The Contractor's procedures for safely handling non-hazardous contaminated soils. The procedures must include personnel safety and health as well as environmental protection considerations.

3. Name, address, New York State Department of Health's (DOH) Environmental Laboratories Accreditation Program (ELAP) status and telephone number of the proposed laboratory for analysis of representative soil samples. The ELAP for the intended analysis must approve the laboratory.

4. Identification of the Contractor's proposed waste transporter(s). This information shall include:

   a. Name and Waste Transporter Permit Number

   b. Address

   c. Name of responsible contact for the hauler

   d. Telephone number for the contact

   e. Any and all necessary permit authorizations for each type of waste transported

   f. Previous experience in performing the type of work specified herein

5. All staging/stockpiling areas (if stockpiling areas are intended and available), or alternate procedures that will be used. Alternate procedures may include, but are not limited to, agreements from the intended disposal or treatment facilities to accept boring data and/or analytical data previously obtained during the site characterization so that materials may be directly loaded into vehicles for shipment to the disposal facility.

6. A backup facility should the staging/stockpile areas become unavailable, insufficient in area or not be present by some other unforeseen difficulty.

7. Identification of the Contractor's two proposed Treatment Storage or Disposal (TSD) facilities for non-hazardous contaminated soils (primary and back-up) for final disposal of the soils. The primary TSD shall be an approved soil recycling/treatment facility. The backup facility may be a recycling/treatment facility or a New York State Department of Environmental Conservation (DEC) approved lined landfill or other facility approved by DEC to accept this material. The information required for each facility shall include:

   a. Facility name and the State identification number

      (1) Facility location

      (2) Name of responsible contact for the facility

      (3) Telephone number for contact

      (4) Signed letter of agreement to accept waste as specified in this contract

      (5) Unit of measure utilized at facility for costing purposes

   b. A listing of all permits, licenses, letters of approval, and other authorizations to operate, which are currently held and valid for the proposed facility.

   c. A listing of all permits, licenses, letters of approval, and other authorizations to operate which have been applied for by the proposed facility but not yet granted or issued.

d. The Contractor shall specify and describe the disposal/containment unit(s) that the proposed facility will use to manage the waste. The Contractor shall identify the capacity available in the units and the capacity reserved for the subject waste.

e. The Contractor shall provide the date of the proposed facility's last compliance inspection.

f. A list of all active (unresolved) compliance orders (or agreements), enforcement notices, or notices of violations issued to the proposed facility shall be provided. The source and nature of the cause of violation shall be stated, if known.

8. Description of all sampling and field/laboratory analyses that will be needed to obtain disposal facility approval.

8.01 C1.2 MATERIALS

A. Containers shall be as required in the United State Department of Transportation (DOT) regulations.

B. Polyethylene to be placed under (20 mil. thickness minimum) and over (10 mil. thickness minimum) soil piles.

C. The Contractor shall assure that the waste hauler's appropriate choice of vehicles and operating practices shall prevent spillage or leakage of contaminated material from occurring en route.

D. The Contractor shall provide, install and maintain any temporary loading facilities on site as required until completion of material handling activities. The location and design of any facilities shall be included in the MHP and be approved by the Program Management, OEGS.

8.01 C1.3 CONSTRUCTION DETAILS

A. Material Handling

1. Immediately after excavation of non-hazardous contaminated soil the Contractor shall:

   a. Load material directly onto trucks/tankers/roll offs for disposal off site; or

   b. If interim stockpiling is required, place on a minimum of 20 mil. or equivalent plastic ground cloth and cover by minimum of 10 mil. polyethylene sheeting or equivalent to protect against leaching or runoff of contaminants into groundwater or stormwater. Weight or secure the sheeting by appropriate means and seal seams as approved by the DDC to prevent tearing or removal by weather. Grade surrounding surface to provide for positive drainage away from pile. Stockpile shall not exceed 100 cubic yards.

2. Institute appropriate procedures and security measures to ensure the protection of site personnel and the public from contaminated materials as described in the approved MHP and Item 8.01 S - Health and Safety.

3. Any soil encountered that appears to contain unknown contaminants (based on visual, odor, or other observation), or that vary substantially from the material originally identified must be segregated in stockpiles and the independent Environmental Consultant promptly notified. Construct stockpiles to the same requirements as stated in subsection A.1.b above.

4. Provide any dewatering that is necessary to complete the work. Contaminated water shall be disposed of in accordance with Item 8.01 W1 – Removal, Treatment and Discharge/Disposal of Contaminated Water.

5. Provide and operate field organic vapor test equipment, a PID or a flame ionization detector (FID), to detect general organic vapor levels at intervals of approximately fifty (50) cubic yards of soil excavated, when visual or odor observations indicate the material may substantially differ from the soil previously excavated and/or as directed by the independent Environmental Consultant.

B. Off-Site Transportation to Disposal or Treatment Facility

1. General

a. The Contractor shall furnish all labor, equipment, supplies and incidental costs required to transport contaminated material from the work area to the off-site disposal or treatment facility, and any other items and services required for transporting contaminated material for disposal at an off-site facility.

b. The Contractor shall submit the name and location of the facility where an off-site scale is located. The Contractor shall also submit a plan to the DDC for review outlining procedures on controlling trucks leaving the work site and en-route to the off-site scale. The Contractor shall be responsible for tracking all material/vehicles from the site to the off-site scale.

c. The Contractor shall provide to the DDC certified tare and gross weight slips for each load received at the accepted facility which shall be attached to each returned manifest.

d. The Contractor shall coordinate the schedule for truck arrival and material deliveries at the job site to meet the approved project schedule.

e. The Contractor shall inspect all vehicles leaving the project site to ensure that contaminated soils adhering to the wheels or undercarriage are removed prior to the vehicle leaving the site.

f. The Contractor shall obtain letters of commitment from the waste haulers and the treatment, disposal or recovery facility to haul and accept shipments. The letter shall indicate agreement to handle and accept the specified estimated quantities and types of material during the time period specified in the project schedule and any time extension as deemed necessary.

g. **The Program Management, OEGS shall review and approve waste profiles before transportation to the TSD facility.**

2. Hauling

a. The Contractor shall coordinate manifesting, placarding of shipments, and vehicle decontamination. All quantities shall also be measured and recorded upon arrival at the disposal or treatment facility. If any deviation between the two records occurs, the matter is to be reported immediately to the DDC and to be resolved by the Contractor to the satisfaction of the DDC.

b. The Contractor shall be held responsible, at its own cost for any and all actions necessary to remedy situations involving material spilled in transit or mud and dust tracked off-site.

c. The Contractor shall ensure that trucks are protected against contamination by properly covering and lining them with compatible material (such as polyethylene) or by decontaminating them prior to and between acceptances of loads.

d. The Contractor shall be responsible for inspecting the access routes for road conditions, overhead clearance, and weight restrictions.

e. The Contractor shall only use the transporter(s) identified in the MHP for the performance of work. Any use of substitute or additional transporters must have previous written approval from the Program Management, OEGS at no additional cost to the City.

f. The Contractor shall develop, document, and implement a policy for accident prevention.

g. The Contractor shall not combine contaminated materials from other projects with material from this project.

h. No material shall be transported until approved by the DDC.

3. Off-Site Disposal

a. The Contractor shall use only the facility(ies) identified in the MPH for the performance of the work. Substitutions or additions shall not be permitted without prior written approval from the Program Management, OEGS, and if approved shall be at no extra cost to the City.

b. The Contractor shall be responsible for acceptance of the materials at an approved facility, for ensuring that the facility is properly permitted to accept the stated materials, and that the facility provides the stated treatment and/or disposal services.

c. The DDC reserves the right to contact and visit the disposal or treatment facility and regulatory agencies to verify the agreement to accept the stated materials and to verify any other information provided.

d. In the event that the identified and approved facility ceases to accept the stated materials or the facility ceases operations, it is the Contractor's responsibility to locate an alternate approved and permitted facility(ies) for accepting materials. The alternate facility(ies) must be approved in writing by the DDC in the same manner and with the same requirements as for the original facility(ies). This shall be done at no extra cost or delay to the City.

e. The Contractor shall obtain manifest forms, and complete the shipment manifest records required by the appropriate regulatory agencies for verifying the material and quantity of each load in unit of volume and weight. Copies of each manifest shall be submitted to the DDC within four (4) business days following shipment, and within three (3) business days after notification of receipt of the facility. Any manifest discrepancies shall be reported immediately to the DDC and be resolved by the Contractor to the satisfaction of the DDC.

4. Equipment and Vehicle Decontamination

a. The Contractor shall design and construct a portable decontamination station to be used to decontaminate equipment and vehicles exiting from the exclusion zone. The cost for this work will be paid under Item 8.01 S - Health and Safety.

b. Water generated during the decontamination process shall be disposed of in accordance with Item 8.01 W1 – Removal, Treatment and Discharge/Disposal of Contaminated Water.

8.01 C1.4 METHOD OF MEASUREMENT

Quantities for non-hazardous contaminated soils shall be measured in tons. The tonnage will be determined by off-site truck scales, as per Subsection 8.01 C1.3.B1, that are capable of generating load tickets.

8.01 C1.5 PRICE TO COVER

A. The unit bid price bid per ton for Item 8.01 C1 shall include the cost of furnishing all labor, materials, equipment, plan, and insurance for excavation, handling, transportation, disposal, documentation, fees, permits, loading, stockpiling, hauling, and any other incidentals necessary to complete all the work as specified herein for handling, transporting, and disposal of non-hazardous contaminated soil.

B. Final disposal of hazardous soil shall be paid for under Item 8.01 H – Handling, Transporting and Disposal of Hazardous Soils. Disposal of decontamination water shall be paid for under Item 8.01 W1 – Removal, Treatment and Discharge/Disposal of Contaminated Water.

C. Backfill will be paid for under its respective item as specified in the contract document.

D. The independent Environmental Consultant shall be paid under Item 8.01 S – Health and Safety.

Payment will be made under:

ITEM NUMBER	ITEM	PAYMENT UNIT
8.01 C1	Handling, Transporting, and Disposal of Non-Hazardous Contaminated Soil	Tons

ITEM 8.01 C2 SAMPLING AND TESTING OF CONTAMINATED/ POTENTIALLY HAZARDOUS SOIL FOR DISPOSAL PARAMETERS

8.01 C2.1 WORK TO INCLUDE

A. Description

The work shall consist of collecting and analyzing representative soil samples for parameters typically requested by the disposal facilities.

B. Sampling and Laboratory Analysis

1. At least thirty (30) days prior to the commencement of work, the Contractor's independent Environmental Consultant must submit a Soil Sampling Plan/Field Sampling Plan (SSP/FSP) to the Program Management, Office of Environmental and Geotechnical Services (OEGS) for review and approval. The plan shall include the name, address, DOH's ELAP status, and telephone numbers of the proposed laboratory. The plan shall also include training and experience of the personnel who will collect the samples.

2. The Contractor shall sample and analyze representative samples of the contaminated/potentially hazardous soils. For stockpiled soils, the Contractor shall collect and analyze one (1) composite sample per 500 cubic yards or fraction thereof. Each composite sample shall consist of a minimum of five (5) grab samples collected from greater than two (2) feet below the soil surface. For drummed soil, the Contractor shall collect one (1) composite sample per (ten) 10 drums or fraction thereof. Each composite sample shall consist of a grab sample from each of the ten (10) drums or fraction thereof. Each composite sample shall be analyzed for Resource Conservation and Recovery Act (RCRA) hazardous waste characteristics (Ignitability, Reactivity, Corrosivity), Full Toxicity Characteristic Leaching Procedure (TCLP) (including RCRA metals, volatile Organic Compounds (VOCs), Semi-Volatile Organic Compounds (SVOCs), pesticides, herbicides), Total Petroleum Hydrocarbons (TPH) and Polychlorinated Biphenyls (PCBs). All samples collected should be analyzed on a five (5) calendar days turn around time and analytical results must be submitted to Program Management, OEGS upon receipt of the analytical results.

3. All sampling shall be conducted by a person trained in sampling protocols using standard accepted practices for obtaining representative samples.

4. The Contractor must also contact the disposal facility where the waste will be sent for permanent disposal, and arrange to collect any additional samples required by the facility. The cost associated with additional sampling and testing shall be included in the bid price of this Item.

5. The quality of the data from the sampling program is the Contractor's responsibility. The Contractor must furnish all qualified personnel, equipment and instruments necessary to carry out the sampling. Unless directed otherwise, all sampling procedures must follow the DEC sampling guidelines and protocols.

6. All sample containers shall be marked and identified with legible sample labels which shall indicate the project name, sample location and/or container, the sample number, the date and time of sampling, preservatives utilized and other information that may be useful in determining the character of the sample. Chain-of-custody shall be tracked from laboratory issuance of sample containers through laboratory receipt of the samples.

7. The Contractor shall maintain a bound sample logbook. The Contractor shall provide DDC access to it at all times and shall turn it over to the DDC in good condition at the completion of the work. The following information, as a minimum shall be recorded to the log:

    1. Sample identification number
    2. Sample location
    3. Field observation
    4. Sample type
    5. Analyses
    6. Date/time of collection
    7. Collector's name
    8. Sample procedures and equipment utilized
    9. Date sent to laboratory and name of laboratory

8. The City reserves the right to direct the Contractor to conduct alternative sampling in lieu of the parameters described in subsection B2, if the situation warrants. The substitute sampling parameters shall be of equal or lesser monetary value than those described in subsection B2, as determined by industry laboratory pricing standards.

9. Only dedicated sampling equipment may be used to collect these samples. All equipment involved in field sampling must be decontaminated before being brought to the sampling location, and must be properly disposed after use.

10. Soils exceeding any of the hazardous characteristic criteria meet the legal definition of hazardous soils (rather than non-hazardous contaminated soils) and shall be transported or disposed of under Item 8.01 H – Handling, Transporting and Disposal of Hazardous Soils. All analyses must be done by a laboratory that has received approval from the ELAP for the methods to be used. The Contractor must specify the laboratory in the MHP.

8.01 C2.2 METHOD OF MEASUREMENT

Quantities for samples shall be measured as the number of sets of samples that are tested. A set shall be defined as one (1) composite sample analyzed for the full range of parameters as specified in subsection B2.

8.01 C2.3 PRICE TO COVER

The unit price bid per set for Item 8.01 C2 shall include the cost of furnishing all labor, materials, equipment, plan, and insurance necessary for sampling, handling, transporting, testing, documentation, fees, permits and any other incidentals necessary to complete the work as specified herein for sampling and testing of contaminated/potentially hazardous soil.

Payment will be made under:

ITEM NUMBER	ITEM	PAYMENT UNIT
8.01 C2	Sampling and Testing of Contaminated/ Potentially Hazardous Soil for Disposal Parameters	Set

ITEM 8.01 H HANDLING, TRANSPORTING, AND DISPOSAL OF HAZARDOUS SOILS

8.01 H.1 WORK TO INCLUDE

General: This work shall consist of the handling, transportation and disposal of soils or materials that are listed as hazardous wastes or exhibit any of the characteristics of a hazardous waste, namely ignitability, corrosivity, reactivity, and toxicity, as defined in 6 NYCRR Part 371, Section 371.3 and 40 CFR Section 261. For the purpose of this specification, soils shall be defined as any materials excavated below the pavement and base for pavement.

Contaminated soils determined to be hazardous under Item 8.01 C2 shall be handled, transported, and disposed of under Item 8.01 H in accordance with the specifications herein.

The independent Environmental Consultant retained by the Contractor, as specified under Item 8.01 S – Health and Safety, shall conduct sampling and analysis of above soils to determine which soils are hazardous.

All work under Item 8.01 H shall be performed under the direct supervision of the Contractor's Environmental Consultant, as approved by the Program Management, Office of Environmental and Geotechnical Services (OEGS).

The Contractor shall ensure that all operations associated with the handling, sampling, loading, transportation, and disposal of hazardous materials are in compliance with the applicable Federal, State, and Local statutes and regulations.

The Contractor shall document the excavation, handling, sampling, and testing, transportation and disposal of hazardous soils. The City shall be listed in the disposal documents as the waste generator.

The Contractor shall supply all equipment, material and labor required to conduct the specified work of this section.

The Contractor shall ensure that all operations associated with the handling, sampling, loading, transportation and disposal of hazardous soils are conducted in a manner to protect site personnel, the public and the environment, in accordance with all applicable Federal, State, and Local laws and regulations.

The Contractor shall decontaminate all equipment prior to its removal from the exclusion zone and/or following contact with hazardous materials, as detailed in Item 8.01 S - Health and Safety. Water generated during the decontamination process shall be disposed of under Item 8.01 W1 – Removal, Treatment and Discharge/Disposal of Contaminated Water.

A. Material Handling Plan: Within forty-five (45) calendar days after award of Contract, the Contractor shall submit to the Program Management, OEGS for review, a Material Handling Plan (MHP). The MHP must be approved by the Program Management, OEGS, prior to the Contractor's commencement of work. The MHP shall, at a minimum, consist of:

   1. The Contractor's procedures for identifying contaminated/potentially hazardous soils during excavation, including instrumentation and calibration procedures to be used.

   2. The Contractor's procedures for safely handling hazardous soils or soils which have not yet been tested but are believed to be potentially hazardous.

   3. Identification of the Contractor's proposed waste transporter(s). This information shall include:

      a. Name and waste transporter permit number

      b. Address

c. Name of responsible contact for the hauler

d. Telephone number for the contact

e. Any and all necessary permit authorizations for each type of waste transported

f. Previous experience in performing the type of work specified herein

4. All staging/stockpiling areas (if stockpiling areas are intended and available), or alternate procedures that will be used. Alternate procedures could include, but are not limited to, agreements from the intended disposal or treatment facilities to accept boring data and/or analytical data previously obtained during the site characterization so that materials may be directly loaded into vehicles for shipment to the disposal facility or the use of off-site stockpiling locations approved by the DEC.

5. A backup facility, should the staging/stockpile areas become unavailable, insufficient in area or not be present by some other unforeseen difficulty.

6. Identification of the Contractor's two proposed United State Environmental Protection Agency (EPA) or DEC approved RCRA TSD facilities for hazardous soils.

7. The Contractor shall submit the following information prior to any transportation of soils regarding the temporary and final off-site TSD or facilities where it is proposing to take hazardous soils. The expense of furnishing all information will be included in the Contractor's bid price:

   a. General Information

      (1) Facility name and the EPA identification number

      (2) Facility location

      (3) Name of responsible contact for the facility

      (4) Telephone number for contact

      (5) Signed letter of agreement to accept waste as specified in this contract

      (6) Signed letter of agreement with a TSD for disposal of waste that may not be land-disposed

      (7) Unit of measure utilized at each facility for costing purposes

   b. A listing of all permits, licenses, letters of approval, and other authorizations to operate, which are currently held and valid for the proposed facility as they pertain to receipt and management of wastes derived from this Contract.

   c. A listing of all permits, licenses, letters of approval, and other authorizations to operate which have been applied for by the proposed facility.

   d. The Contractor shall specify and describe the disposal/containment unit(s) that the proposed facility will use to manage the waste. The Contractor shall identify the capacity available in the units and the capacity reserved for the subject waste.

   e. The Contractor shall provide the date of the proposed facility(ies) last compliance inspection under RCRA.

   f. A list of all active (unresolved) compliance orders, agreements, enforcement notices or notices of violations issued to the proposed facility shall be approved. The source and nature of the cause of violation shall be stated, if known.

8. Description of all sampling and analyses that will be needed to obtain disposal facility approval.

8.01 H.2 MATERIALS

A. Containers shall be watertight as required in the DOT regulations and must meet all applicable regulations including but not limited to those in Attachment 2.

B. Polyethylene (20 mil. thickness minimum) to be placed under and (10 mil. thickness minimum) over soil piles. If soils are placed in drums, polyethylene must be placed over the drums.

8.01 H1.3 CONSTRUCTION DETAILS

A. Material Handling

1. The Contractor shall institute procedures to protect site personnel and the public from the non-hazardous and hazardous materials as described in Section 8.01 S - Health and Safety.

2. The Contractor shall handle hazardous soil as approved in the MHP.

3. Stockpiled materials at the temporary TSD facility shall be handled according to the facility requirements but at a minimum: shall be drummed or placed on and covered with polyethylene to protect against erosion and leaching into surrounding soils, the stockpile area shall be graded for positive drainage away from the pile, and shall be labeled while being held for sampling prior to permanent disposal.

4. Provide any dewatering that is necessary to complete the work. Water shall be disposed of in accordance with Item 8.01 W1 – Removal, Treatment and Discharge/Disposal of Contaminated Water.

B. Off-Site Transportation and Disposal

1. The Contractor shall furnish all labor, equipment and supplies required to transport hazardous materials from the work area to the off-site TSD facility(ies) and to acquire any other items and services required for transporting hazardous materials for storage and/or disposal at an approved off-site facility.

2. Weight Measurement

   a. The Contractor shall submit the name and location of the facility where an off-site scale is located. The Contractor shall also submit a plan to the DDC for review outlining procedures on controlling trucks leaving the work site and on-route to the off-site scale. The Contractor shall be responsible for tracking all materials/vehicles from the site to the off-site scale.

   b. The Contractor shall provide to the DDC certified tare and gross weight slips for each load received at the accepted facility which shall be attached to each returned manifest.

3. General

   a. Manifests: The Contractor shall organize and maintain the material shipment records/manifests required by law.

   b. The Contractor shall coordinate the schedule for truck arrival and material deliveries at the job site to meet the approved project schedule. The schedule shall be compatible with the availability of equipment and personnel for material handling at the job site.

c. The Contractor shall inspect all vehicles leaving the project site to ensure that hazardous soils adhering to the wheels or under carriage are removed prior to the vehicle leaving the site.

d. The Contractor shall obtain letters of commitment from the waste haulers and the TSD facility to haul and accept shipments. The letter shall indicate agreement to handle and accept the specified estimated quantities and types of material during the time period specified in the project schedule and any time extension as deemed as necessary.

4. Hauling

a. The Contractor shall not deliver waste to any facility other than the TSD facility(ies) listed on the shipping manifest.

b. The Contractor shall coordinate manifesting, placarding, of shipments, and vehicle decontamination. All quantities shall also be measured and recorded upon arrival at the TSD facility. If any deviation between the two records occurs, the matter is to be reported immediately to the DDC and to be resolved by the Contractor to the satisfaction of the DDC.

c. The Contractor shall be held responsible, at its own expense, for any and all actions necessary to remedy situations involving material spilled in transit or mud and dust tracked off-site.

d. The Contractor shall ensure that trucks are protected against contamination by properly covering and lining them with compatible material (such as polyethylene) or by decontaminating them prior to any use other than hauling hazardous materials.

e. The Contractor shall be responsible for inspecting the access routes for road conditions, overhead clearance, and weight restrictions.

f. The Contractor shall only use the transporter(s) identified in the MHP for the performance of work. Only a transporter with a current Part 364 Waste Transporter Permit from the DEC may transport this material. Any use of substitute or additional transporters must have previous written approval from the DDC at no additional cost to the City.

g. The Contractor shall develop, document, and implement a policy for accident prevention.

h. The Contractor shall not combine hazardous materials from other projects with material from this project.

i. **The Contractor shall obtain for the City an EPA hazardous waste generator identification number and a representative of Program Management, OEGS will review and sign the manifest as the generator.**

j. No materials shall be transported until approved by the DDC.

5. Off-Site Disposal

a. The Contractor shall be responsible for acceptance of the materials at an approved TSD facility, for ensuring that the facility is properly permitted to accept the stated materials, and that the facility provides the stated storage and/or disposal services.

b. In the event that the identified and approved facility ceases to accept the stated materials or the facility ceases operations, it is the Contractor's responsibility to

locate an alternate approved and permitted facility(ies) for accepting materials. The Contractor is responsible for making the necessary arrangements to utilize the facility(ies), and the alternate facility(ies) must be approved in writing by the DDC in the same manner and with the same requirements as for the original facility(ies). This shall be done with no extra cost or delay to the City.

c. The Contractor shall submit all results and weights to the DDC.

d. **The Contractor is responsible to pay <u>all fees</u> associated with the generation and disposal of all excavated hazardous waste. These fees include, but are not limited to, the <u>New York State Department of Finance and Taxation (DFT) quarterly fees</u> for hazardous waste and the <u>New York State DEC annual hazardous waste regulatory fee program</u>. The Contractor shall submit a copy of proof of payment to the DDC and Program Management, OEGS.**

6. Equipment and Vehicle Decontamination

The Contractor shall design and construct a portable decontamination station to be used to decontaminate equipment and vehicles exiting from the exclusion zone. The cost for this work shall be paid under Item 8.01 S - Health and Safety. Disposal of decontamination liquids is described under Item 8.01 W1 – Removal, Treatment and Discharge/Disposal of Contaminated Water.

7. Record Keeping

The Contractor shall obtain manifest forms, and complete the shipment manifest records required by the appropriate regulatory agencies for verifying the material and quantity of each load in unit of volume and weight. Copies of each manifest shall be submitted to the DDC within four (4) business days following shipment, and within three (3) business days after notification of receipt of the facility. Any manifest discrepancies shall be reported immediately to the DDC and be resolved by the Contractor to the satisfaction of the DDC.

8.01 H.4 METHOD MEASUREMENT

Quantities for hazardous soil shall be measured in tons satisfactorily delivered to the treatment, storage or disposal facility. The tonnage will be determined by off-site truck scales, as per subsection 8.01 H1.3.B.2, that are capable of generating load tickets.

8.01 H.5 PRICE TO COVER

A. The unit price bid per ton for Item 8.01 H shall include the cost of furnishing all labor, materials, equipment, plan, and insurance for excavation, handling, transportation, disposal, documentation, permits, fees, taxes, stockpiling, hauling, and any other incidentals necessary to complete the work as specified herein for handling, transporting and disposal of hazardous soils.

B. Final disposal of non-hazardous materials shall be paid for under Item 8.01 C1 – Handling, Transporting and Disposal of Non-Hazardous Soils. Disposal of decontamination water shall be paid under Item 8.01 W1 – Removal, Treatment and Discharge/Disposal of Contaminated Water.

C The independent Environmental Consultant shall be paid under Item 8.01 S – Health and Safety.

D. Backfill will be paid for under its respective item.

Payment will be made under:

ITEM NUMBER	ITEM	PAYMENT UNIT
8.01 H	Handling, Transporting, and Disposal of Hazardous Soils	Tons

ITEM 8.01 S HEALTH AND SAFETY

8.01 S.1 WORK TO INCLUDE

Health and Safety Requirements

A. Scope of Work

It is the Contractor's responsibility to stage and conduct his work in a safe manner. The Contractor shall implement a Health and Safety Plan (HASP) for contaminated/hazardous soil intrusive activities as set forth in Occupational Safety and Health Administration (OSHA) Standards 1910.120 and 1926.650-652. The Contractor shall ensure that all workers have at a minimum hazard awareness training. The Contractor shall segregate contaminated work area in secured exclusion zones. These zones shall limit access to Contractor personnel specifically trained to enter the work area. The exclusion zone shall be set up to secure the area from the public and untrained personnel. The project health and safety program shall apply to all construction personnel including persons entering the work area. In addition, the Contractor shall protect the public from on-site hazards, including subsurface contaminants associated with on-site activities. The HASP shall be signed off by a Certified Industrial Hygienist and reviewed by Program Management, Office of Environmental and Geotechnical Services (OEGS).

Work shall include, but not be limited to:

1. Implementation of a baseline medical program.
2. Providing safety equipment and protective clothing for site personnel, including maintenance of equipment on a daily basis; replacement of disposable equipment as required; decontamination of clothing, equipment and personnel; and providing all other health and safety measures.
3. Providing, installing, operating and maintaining on-site emergency medical first aid equipment as specified in this section for which payment is not provided under other pay items in this Contract.
4. Providing, installing, operating, maintaining and decommissioning all equipment and personnel decontamination facilities specified within this section, including, but not limited to, the decontamination pad, decontamination water supply, decontamination water collection equipment and all other items and services required for the implementation of the health and safety requirements for which pay items are not provided elsewhere in this Contract.
5. Provide the minimum health and safety requirements for excavation activities within the limits of this Contract.
6. Implement and enforce a HASP: The HASP as presented in these specifications is dynamic with provisions for change to reflect new information, new practices or procedures, changing site environmental conditions or other situations which may affect site workers and the public. The HASP will also address measures for community protection, accident prevention, personnel protection, emergency response/contingency planning, air monitoring, odor control and hazardous chemicals expected on site. Providing a Confined Space Entry Program as defined in the Occupational Safety and Health Act, Confined Space Entry Standard, 29 CFR 1910.146.

B. Environmental Consulting Services

The Contractor shall retain an independent Environmental Consultant to obtain all permits and perform all field screening, air monitoring, community air monitoring, soil sampling, and

health and safety services. The independent Environmental Consultant shall at a minimum provide documentation to the Program Management, OEGS demonstrating the minimum requirements as set forth below:

1. The independent Environmental Consultant project supervisor on site and other designated key personnel shall have a minimum of three (3) years experience in the environmental field dealing with issues associated with contaminated soils. Such experience shall include oversight on environmental, specifically volatile organic compound and dust monitoring services as a routine part of its daily operations.

2. The independent Environmental Consultant must be experienced in work of this nature, size, and complexity and must have previous experience in working with the DEC.

3. The independent Environmental Consultant shall furnish a project listing identifying the location, nature of services provided, owner, owner's contact, contact's telephone number, project duration and value for at least five (5) projects within the last three (3) years.

4. If conditions within the exclusion zone are deemed hazardous, then the Contractor and its independent Environmental Consultant shall ensure that all personnel working within identified exclusion zones and/or involved (direct contact) with the handling, storage or transport of hazardous and contaminated materials shall have completed a minimum of forty (40) hours of Health and Safety Training on Hazardous Waste Sites in accordance with 29 CFR 1910.120(e). The training program shall be conducted by a qualified safety instructor. If conditions in the exclusion zone are deemed to be non-hazardous, the independent Environmental Consultant shall provide site specific training.

5. The Contractor shall ensure that on-site management and supervisors directly responsible for or who supervise employees engaged in hazardous waste operations shall receive the training specified in above and at least eight (8) additional hours of specialized training on managing such operations at the time of job assignment.

C. Submittals

1. The Contractor shall submit, within forty-five (45) calendar days after the contract award, a written HASP as specified herein, to Program Management, OEGS for review and comment. The Contractor shall make all necessary revisions required by Program Management, OEGS and resubmit the HASP to the Program Management, OEGS for acceptance. Start-up work for the project will not be permitted until written acceptance has been issued by the Program Management, OEGS.

2. Daily safety logs shall be maintained by the Contractor and shall be submitted to the DDC either on request or on completion of the work. Training logs shall be maintained by the Contractor and submitted to the DDC either on request or on completion of the work. Daily logs on air monitoring during excavation activities shall be prepared and maintained by the Contractor and submitted to the DDC either on request or upon completion of the work.

3. A closeout report shall be submitted by the Contractor to the DDC upon completion of the work within the defined exclusion zones. This report shall summarize the daily safety and monitoring logs and provides an overview of the Contractor's performance regarding environmental and safety issues. The report shall carefully document all areas where contamination has been found including pictures, addresses of locations, and potential sources.

4. Medical Surveillance Examinations: The Contractor shall submit to the DDC the name, office address and telephone number of the medical consultant utilized. Evidence of

baseline medical examinations together with the evidence of the ability to wear National Institute for Occupational Safety and Health (NIOSH) approved respirators (as specified in American National Standards Institute (ANSI) Z88.6) shall be provided to the DDC for all construction personnel who are to enter the exclusion zones.

5. Accident Reports: All accidents, spills, or other health and safety incidents shall be reported to the DDC.

D. Health and Safety Plan

The HASP shall comply with OSHA regulations 29 CFR 1910.120/1926.65. This document shall at a minimum contain the following:

1. Description of work to be performed
2. Site description
3. Key personnel
4. Worker training procedures
5. Work practices and segregation of work area
6. Hazardous substance evaluation
7. Hazard assessment
8. Personal and community air monitoring procedures and action levels
9. Personal protective equipment
10. Decontamination procedures
11. Safety rules
12. Emergency procedures
13. Spill control, dust control, vapor/odor suppression procedures
14. Identification of the nearest hospital and route
15. Confined space procedures
16. Excavation safety procedures

8.01 S.2 MEASUREMENT

Health and Safety Requirements

A. 25% of the lump sum price will be paid when the following items are implemented or mobilized:

Medical surveillance program
Health and safety training
Health and safety plan
Environmental and personnel monitoring
Instrumentation
Spill control
Dust control
Personnel and equipment decontamination facilities
Personnel protective clothing
Communications
Mobilization

B. 50% will be paid in proportional monthly amounts over the period of work.

C 25% will be paid when the operation is demobilized and removed from the project site.

8.01 S.3 PRICE TO COVER

Health and Safety Requirements

The lump sum price bid for the health and safety requirements shall include all labor, materials, equipment, and insurance necessary to complete the work in accordance with these specifications. The price bid shall include, but not be limited to, the following:

A. Providing training, safety personnel, air monitoring and medical examinations as specified.

B. Providing safety equipment and protective clothing for site personnel, including maintenance of equipment on a daily basis; replacement of disposable equipment as required; decontamination of clothing, equipment and personnel; and all other health and safety activities or costs not paid for under other pay items in this Contract.

C. Providing, installing, operating and maintaining on-site emergency medical and first aid equipment. This includes all furnishings, equipment, supplies and maintenance of all medical equipment, and all other health and safety items and services for which payment is not provided under other pay items in this Contract.

D. Providing, installing, operating, maintaining, and decommissioning all personnel and equipment decontamination facilities, including decontamination pad, decontamination water supply, and all other items and services required for the implementation of the health and safety requirements for which pay items are not provided elsewhere in this Contract. Vehicle decontamination pads shall be included in the price of this item. Disposal of decontamination fluid shall be paid for under Item 8.01 W1 – Removal, Treatment and Discharge/Disposal of Contaminated Water.

E. Spill Control

1. Payment shall account for furnishing, installing, and maintaining all spill control equipment and facilities. Payment will include equipment and personnel to perform emergency measures required to contain any spillage and to remove spilled materials and soils or liquids that become contaminated due to spillage during work within the exclusion zones and handling of excavated soils and liquids from these areas. This collected spill material will be properly disposed of.

2. Payment under this item shall not include testing, handling, transportation or disposal of petroleum-contaminated/potentially hazardous soils excavated during construction. The price for this work will be paid for under Items 8.01 C1 – Handling, Transporting and Disposal of Non-Hazardous Contaminated Soils, 8.01 C2 – Sampling and Testing of Contaminated/Potentially Hazardous Soil for Disposal Parameters or 8.01 H – Handling, Transporting and Disposal of Hazardous Soils, as appropriate.

F. Dust Control

Payment shall account for furnishing, installing, and maintaining dust control equipment and facilities to be used whenever applicable dust levels are exceeded. Payment will include all necessary labor, equipment, clean water, foam, and all other materials required by the Dust Control Plan. The DOH Community Air Monitoring Plan (CAMP) may be used as guidance.

G. Vapor/Odor Suppression

Payment shall account for furnishing, installing and maintaining vapor/odor control equipment and facilities to be used whenever organic vapor monitoring or the presence of odors indicates that vapor suppression is required to protect workers or the public. Payment will include all

necessary labor, equipment, clean water, foam and all other materials required by the Vapor/Odor Suppression Plan.

H. Mobilization/Demobilization

1. Mobilization

Payment shall include but not be limited to:

a. All work required to furnish, install and maintain all signs, fencing, support zone facilities, parking areas and all temporary utilities;

b. All work required to furnish, install, and maintain an office space with phone and utilities for health and safety personnel;

c. All work required for complete preparation of lay down area for roll-off containers, including sampling, and any required fencing;

d. All direct invoiced cost from bonding companies and government agencies for permits and costs of insurance; and

e. All other items and services required for mobilization and site preparation.

2. Demobilization

Payment shall include but not be limited to: All work required to sample the area; remove from the site all equipment, temporary utilities and supporting facilities; performance of necessary decontamination and repairs; disposal of disposable equipment and protective gear and other items and services required for complete demobilization.

Payment will be made under:

ITEM NUMBER	ITEM	PAYMENT UNIT
8.01 S	Health and Safety	Lump Sum

HAZ-21

ITEM 8.01 W1 REMOVAL, TREATMENT AND DISCHARGE/DISPOSAL OF CONTAMINATED WATER

8.01 W1.1 WORK TO INCLUDE

General: This work shall consist of the proper removal and disposal of all contaminated groundwater and decontamination water generated during construction operations. The Contractor shall be solely responsible for the proper disposal or discharge of all contaminated water generated at the job site. The Contractor will have the option of treating water on-site for discharge to the combined sanitary/storm sewer system or removing contaminated water for off-site disposal. The Contractor shall be responsible to choose a method compatible to the construction work and shall be compensated on a per day basis regardless of method employed. The Contractor will be compensated for only those days where the system is in full operation.

The Contractor shall retain a dewatering/water treatment Specialist (hereinafter the "Specialist") and laboratory as specified under Item 8.01 W2 – Sampling and Testing of Contaminated Water, to conduct any testing that may be required for disposal of impacted water.

The dewatering/water treatment Specialist is responsible to obtain all permits; perform all water sampling, testing; and provide ancillary services related to dewatering and water treatment. The Specialist shall at a minimum provide documentation to the Program Management, Office of Environmental and Geotechnical Services (OEGS) demonstrating the minimum requirements as set forth below:

1. The Specialist shall demonstrate that it has, at a minimum, three (3) years experience in the design of dewatering plans. The Specialist should demonstrate expertise dealing with issues associated with contaminated water. During that three (3) year period, the Specialist shall demonstrate that it provided dewatering and water treatment systems as a routine part of its daily operations.
2. The Specialist must be experienced in work of this nature, size, and complexity and must have previous experience in working with the DEC.
3. The Specialist shall furnish a project listing identifying the location, nature of services provided, owner, owner's contact, contact's telephone number, project duration and value for at least five (5) projects within the last three (3) years of a similar nature, size, and complexity to this one.
4. If conditions within the exclusion zone are deemed hazardous, then the Contractor and its independent Environmental Consultant shall ensure that all personnel working within identified exclusion zones and/or involved (direct contact) with the handling, storage or transport of hazardous and contaminated material shall have completed a minimum of forty (40) hours of Health and Safety Training on Hazardous Waste Sites in accordance with 29 CFR 1910.120(e). The training program shall be conducted by a qualified safety instructor. If conditions in the exclusion zone are deemed to be non-hazardous, the Specialist shall be responsible to provide site-specific training to its employees and other affected personnel.
5. The Contractor shall ensure that on-site management and supervisors directly responsible for or who supervise employees engaged in hazardous waste operations shall receive the training specified in above and at least eight (8) additional hours of specialized training on managing such operations at the time of job assignment.

The Contractor shall document all operations associated with the handling, sampling and disposal of contaminated water, and ensure that they are in compliance with applicable Federal, State and Local statutes and regulations.

The Contractor shall supply all labor, equipment, transport, plant, material, treatment, and other incidentals required to conduct the specified work of this section.

If water will be disposed of into the combined sanitary/storm sewer system, the Contractor shall ensure the Specialist treats the water to comply with the New York City Department of Environmental Protection (DEP) Sanitary/Combined and Storm Sewer Effluent Limit concentrations prior to discharge. The Contractor is responsible for providing settling or filtering tanks and any other apparatus required by DEP. Alternatively, the Contractor can provide a plan for transport and disposal at an off-site waste disposal facility.

Within forty-five (45) calendar days after award of Contract, the Contractor shall submit to the Program Management, OEGS for review, a Water Handling Plan (WHP). The WHP must be approved by the Program Management, OEGS, prior to the Contractor's commencement of work. The minimum requirements for the WHP are specified herein Item 8.01W 1.2, for each type of disposal (disposal into the combined sanitary/storm sewer or off-site disposal). The Contractor shall maintain a complete, up to date copy of the WHP on the job site at all times.

8.01 W1.2 CONSTRUCTION DETAILS

For each disposal method the Contractor proposes to utilize (disposal to combined sanitary/storm sewer or off-site disposal), the WHP shall include the information required in paragraphs A and B below, as appropriate.

A. <u>On-site treatment and discharge into New York City combined sanitary/storm sewers.</u>

1. Regulations: The Contractor shall comply with all applicable regulations. This includes but may not be limited to:

   Title 15-New DEP Sewer Use Regulations.

2. Permits: The Contractor is solely responsible to obtain all necessary and appropriate Federal, State and Local permits and approvals. The Contractor will be responsible for performing all and any system pilot tests required for permit approval. This includes but may not be limited to:

   a. Industrial waste approval for the New York City sewer system.

   b. Groundwater discharge permit for the New York City sewer system (DEP Division of Sewer Regulation and Control), if discharge to sewer exceeds 10,000 gallons per day.

   c. The Contractor shall comply with DEC State Pollutant Discharge Elimination System (SPDES) Permit Number GP-0-10-001, General Permit for Stormwater Discharges.

   d. Long Island well point permit for Brooklyn and Queens sites, if well points are used for dewatering.

   e. Wastewater quality control application, DEP.

3. The WHP for this portion of the work shall include at a minimum:

a. Identification and design of Contractor's proposed treatment to assure that the water meets the DEP sewer use guidelines prior to discharge to the sewer, including identification of all materials, procedures, settling or filtering tanks, filters and other appurtenances proposed for treatment and disposal of contaminated water.

b. The name, address and telephone number of the contact for the Contractor's proposed chemical laboratory, as well as the laboratory's certifications under Federal, State or non-governmental bodies.

c. The name, address and telephone number of the contact for the Contractor's proposed independent Environmental Consultant.

d. Copies of all submitted permit applications and approved permits the Contractor have received.

4. Materials

The Contractor shall supply all settling or filtering tanks, pumps, filters, treatment devices and other appurtenances for treatment, temporary storage and disposal of contaminated water. All equipment shall be suitable for the work described herein.

5. Execution

a. The Contractor is solely responsible for disposal of all water, in accordance with all Federal, State and Local regulations.

b. The Contractor is solely responsible for any treatment required to assure that water discharged into the sewer is in compliance with all permits and Federal, State and Local statutes and regulations.

c. The Contractor is solely responsible for the quality of the water disposed of into the sewers.

d. The Contractor is responsible for sampling and testing of water for the DEP Sanitary/Combined and Storm sewer Effluent Limit concentrations. The quality of the data is the Contractor's responsibility. Any sampling and testing shall be conducted and paid in accordance with Item 8.01 W2 – Sampling and Testing of Contaminated Water.

e. The Contractor shall be responsible to maintain the discharge rate to the sewer such that all permit requirements are met, the capacity of the sewer is not exceeded and no surcharging occurs downstream due to the Contractor's actions. Dewatering by means of well points or deep wells will not be allowed in the Boroughs of Brooklyn or Queens where the rate of pumping exceeds forty-five (45) gallons per minute unless the appropriate permit has been secured from the DEC.

f. Disposal of Treatment Media

(1) The Contractor shall be responsible for disposal or recycling of treatment media in accordance with all Federal, State and Local regulations.

(2) The Contractor shall provide the DDC with all relevant documentation concerning the disposal of treatment media, including manifests, bills of

lading, certificates of recycling or destruction and other applicable documentation.

(3) **Disposal of treatment media shall not be considered as a separate pay item; instead it shall be considered as incidental work thereto and included in the unit price bid.**

B. Off-Site Disposal

1. Regulations: The Contractor shall conform to all applicable Federal, State and Local regulations pertaining to the transportation, storage and disposal of any hazardous and/or non-hazardous materials as listed in Attachment 2.

2. The following shall be submitted to the DDC prior to initiating any off-site disposal:

a. (1) Name and waste transporter permit number

(2) Address

(3) Name of responsible contact for the hauler

(4) Any and all necessary permit authorizations for each type of waste transported

(5) Previous experience in performing the type of work specified herein

b. General information for each proposed treatment/disposal facility and at least one backup treatment/disposal facility

(1) Facility name and EPA identification number

(2) Facility location

(3) Name of responsible contact for the facility

(4) Telephone number for contact

(5) Unit of measure utilized at facility for costing purposes

c. A listing of all permits, licenses, letters of approval and other authorizations to operate, which are currently held and valid for the proposed facility as they pertain to receipt and management of the wastes derived from this Contract.

d. A listing of all permits, licenses, letters of approval and other authorizations to operate which have been applied for by the proposed facility but not yet granted or issued. Provide dates of application(s) submitted. Planned submittals shall also be noted.

e. The Contractor shall specify and describe the disposal/containment unit(s) that the proposed facility will use to manage the waste and provide dates of construction and beginning of use, if applicable. Drawings may be provided. The Contractor shall identify the capacity available in the units and the capacity reserved for the subject waste.

f. The Contractor shall provide the date of the proposed facility's last compliance inspection.

g. A list of all active (unresolved) compliance orders, agreements, enforcement notices or notices of violations issued to the proposed facility shall be submitted. The source and nature of the cause of violation shall be stated, if known. If groundwater contamination is noted, details of the facility's groundwater monitoring program shall be provided.

h. Description of all sampling and field/laboratory analyses that will be needed to obtain disposal facility approval.

3. Materials

All vessels for temporary storage and transport to an off-site disposal facility shall be as required in DOT regulations.

4. Execution

a. General

(1) The Contractor shall organize and maintain the material shipment records/manifests required by Federal, State and Local law. The Contractor shall include all bills of lading, certificates of destruction, recycling or treatment and other applicable documents.

(2) The Contractor shall coordinate the schedule for truck arrival and material deliveries at the job site to meet the approved project schedule. The schedule shall be compatible with the availability of equipment and personnel for material handling at the job site.

(3) The Contractor shall inspect all vehicles leaving the project site to ensure that contaminated liquids are not spilling and are contained for transport.

(4) The Contractor shall obtain letters of commitment from the waste haulers and the treatment, disposal or recovery facility to haul and accept shipment. The letter shall indicate agreement to handle and accept the specified estimated quantities and types of material during the time period specified in the project schedule and any time extension as deemed as necessary.

(5) The Contractor shall verify the volume of each shipment of water from the site.

(6) The Contractor is responsible for sampling and testing of water for off-site disposal. The quality of the data is the Contractor's responsibility. Any sampling and testing shall be conducted and paid in accordance with Item 8.01 W2 – Sampling and Testing of Contaminated Water.

(7) The Contractor shall be responsible for any additional analyses required by the TSD facility, and for the acceptance of the water at an approved TSD facility.

b. Hauling

(1) The Contractor shall not deliver waste to any facility other than the TSD facility(ies) listed on the shipping manifest.

(2) The Contractor shall coordinate manifesting, placarding of shipments, and vehicle decontamination. All quantities shall also be measured and recorded upon arrival at the TSD facility(ies). If any deviation between the two records occurs, the matter is to be reported immediately to the DDC and shall be resolved by the Contractor to the satisfaction of the DDC.

(3) The Contractor shall be held responsible for any and all actions necessary to remedy situations involving material spilled in transit or mud and dust tracked off-site. This cleanup shall be accomplished at the Contractor's expense.

(4) The Contractor shall be responsible for inspecting the access routes for road conditions, overhead clearance and weight restrictions.

(5) The Contractor shall only use the transporter(s) identified in the WHP for the performance of work. Only a transporter with a current Part 364 Waste Transporter Permit from DEC may transport this material. Any use of substitute or additional transporters must have previous written approval from the DDC at no additional cost to the City.

(6) The Contractor shall develop, document, and implement a policy for accident prevention.

(7) The Contractor shall not combine waste materials from other projects with material from this project.

(8) The Contractor shall obtain for the City a hazardous waste generator identification number and will sign the manifest as the generator, if necessary.

(9) No material shall be transported until approved by the DDC.

c. Disposal Facilities

(1) The Contractor shall use only the TSD facility(ies) identified in the WHP for the performance of the work. Substitutions or additions shall not be permitted without prior written approval from the Program Management, OEGS, and, if approved, shall be at no extra cost to the City.

(2) The Contractor shall be responsible for acceptance of the material at an approved TSD facility, for ensuring that the facility is properly permitted to accept the stated material, and that the facility provides the stated storage and/or disposal services.

(3) The DDC reserves the right to contact and visit the disposal facility and regulatory agencies to verify the agreement to accept the stated material and to verify any other information provided. This does not in any way relieve the Contractor of his responsibilities under this Contract.

(4) In the event that the identified and approved facility ceases to accept the stated materials or the facility ceases operations, it is the Contractor's responsibility to locate an alternate approved and permitted facility(ies) for accepting materials. The Contractor is responsible for making the necessary arrangements to utilize the facility(ies), and the alternate facility(ies) must be

approved in writing by the DDC in the same manner and with the same requirements as for the original facility(ies). This shall be done with no extra cost or delay to the City.

d. Equipment and Vehicle Decontamination

(1) The Contractor shall design and construct a portable decontamination station to be used to decontaminate equipment and vehicles exiting the exclusion zone. The cost for this work shall be paid under Item 8.01 S – Health and Safety.

8.01 W1.3 METHOD OF MEASUREMENT

The quantity for on-site treatment and discharge or off-site disposal shall be on a per day basis.

8.01 W1.4 PRICE TO COVER

A. The per day price bid for Item 8.01 W1 shall include the cost of furnishing all labor, materials, equipment, plan, and insurance for handling, transportation, disposal, documentation, permits, hauling, mobilization and demobilization, and any other incidentals thereto to complete the work.

B. The Contractor will not be paid for water that is within the DEP Sewer Discharge Limits.

Payment will be made under:

ITEM NUMBER	ITEM	PAYMENT UNIT
8.01 W1	Removal, Treatment and Disposal/Discharge of Contaminated Water	Day

ITEM 8.01 W2 SAMPLING AND TESTING OF CONTAMINATED WATER

8.01 W2.1 WORK TO INCLUDE

A. Description

The work shall consist of sampling and testing of potentially contaminated groundwater, surface runoff within the excavated area and all contaminated water generated during the decontamination process.

B. Sampling and Testing

1. The Contractor is responsible, at a minimum, for sampling and testing of contaminated water for the DEP Sanitary/Combined and Storm Sewer Effluent Limit concentrations as listed in Attachment 1. The quality of the data is the Contractor's responsibility. Any additional testing required by the Federal, State and/or disposal facilities shall be included in the bid price of this Item.

2. All sampling and testing shall be conducted by a person trained in sampling protocols using accepted standard practices and/or the DEC sampling guidelines and protocols.

3. All sample containers shall be marked with legible sample labels which shall indicate the project name, sample location and/or container, the sample number, the date and time of sampling, preservatives utilized, how the sample was chilled to 4 degrees Celsius, and other information that may be useful in determining the character of the sample.

4. Chain-of-custody shall be tracked from laboratory issuance of sample containers through receipt of the samples.

5. The Contractor shall maintain a bound sample log book. The Contractor shall provide the DDC access to it at all times and shall turn it over to the DDC in good condition at the completion of the work. The following information, as a minimum, shall be recorded to the log:

   a. Sample identification number

   b. Sample location

   c. Field observation

   d. Sample type

   e. Analyses

   f. Date/time of collection

   g. Collector's name

   h. Sample procedures and equipment used

   i. Date sent to laboratory/name of laboratory

6. Only dedicated sampling equipment may be used to collect these samples. All equipment involved in field sampling must be decontaminated before being brought to the site, and must be properly disposed of after use.

HA2-29

7. Samples shall be submitted to the Contractor's laboratory within the holding times for the parameters analyzed.

8. All analyses must be done by a laboratory that has received approval from the DOH's ELAP for the methods to be done. The Contractor must specify the laboratory in the WHP.

9. Analytical results for water discharged to the sewer and for off-site disposal must be submitted to the DDC no later than five (5) days after sample collection.

10. The City reserves the right to direct the Contractor to conduct alternative sampling in lieu of the parameters described above, if the situation warrants. The substitute sampling parameters shall be of equal or lesser monetary value than those described above, as determined by industry laboratory pricing standards.

8.01 W2.2 METHOD OF MEASUREMENT

Quantities for samples shall be measured as the number of sets of samples that are tested for the DEP Sanitary/Combined and Storm Sewer Effluent Limit concentrations. A set shall be defined as one (1) representative sample analyzed for the full range of DEP parameters as specified in attachment 1.

8.01 W2.3 PRICE TO COVER

The unit price bid per set for Item 8.01 W2 shall include the cost of furnishing all labor, materials, equipment, plan, and insurance for handling, transport, sampling, testing, documentation, permits, other incidentals necessary to complete the work of sampling and testing of contaminated water. Any additional costs incurred by the Contractor for sampling and testing of contaminated water shall be included in the bid price of this Item.

Payment will be made under:

ITEM NUMBER	ITEM	PAYMENT UNIT
8.01 W2	Sampling and Testing of Contaminated Water	Set

ATTACHMENT 1

New York City Department of Environmental Protection

Limitations for Discharge To Storm, Sanitary/Combined Sewer

NEW YORK CITY DEPARTMENT OF ENVIRONMENTAL PROTECTION
BUREAU OF WASTEWATER TREATMENT

Limitations for Effluent to Sanitary or Combined Sewers

Parameter[1]	Daily Limit	Units	Sample Type	Monthly Limit
Non-polar material[2]	50	mg/l	Instantaneous	---
pH	5-11	SU's	Instantaneous	---
Temperature	< 150	Degree F	Instantaneous	---
Flash Point	> 140	Degree F	Instantaneous	---
Cadmium	2 0.69	mg/l mg/l	Instantaneous Composite	--- ---
Chromium (VI)	5	mg/l	Instantaneous	---
Copper	5	mg/l	Instantaneous	---
Lead	2	mg/l	Instantaneous	---
Mercury	0.05	mg/l	Instantaneous	---
Nickel	3	mg/l	Instantaneous	---
Zinc	5	mg/l	Instantaneous	---
Benzene	134	ppb	Instantaneous	57
Carbontetrachloride	---	---	Composite	---
Chloroform	---	---	Composite	---
1,4 Dichlorobenzene	---	---	Composite	---
Ethylbenzene	380	ppb	Instantaneous	142
MTBE (Methyl-Tert-Butyl-Ether)	50	ppb	Instantaneous	---
Naphthalene	47	ppb	Composite	19
Phenol	---	---	Composite	---
Tetrachloroethylene (Perc)	20	ppb	Instantaneous	---
Toluene	74	ppb	Instantaneous	28
1,2,4 Trichlorobenzene	---	---	Composite	---
1,1,1 Trichloroethane	---	---	Composite	---
Xylenes (Total)	74	ppb	Instantaneous	28
PCB's (Total)[3]	1	ppb	Composite	---
Total Suspended Solids (TSS)	350[4]	mg/l	Instantaneous	---
CBOD[5]	---	---	Composite	---
Chloride[5]	---	---	Instantaneous	---
Total Nitrogen[5]	---	---	Composite	---
Total Solids[5]	---	---	Instantaneous	---
Other				

1 All handling and preservation of collected samples and laboratory analyses of samples shall be performed in accordance with 40 C.F.R. pt. 136. If 40 C.F.R. pt. 136 does not cover the pollutant in question, the handling, preservation, and analysis must be performed in accordance with the latest edition of "Standard Methods for the Examination of Water and Wastewater." All analyses shall be performed using a detection level less than the lowest applicable regulatory discharge limit. If a parameter does not have a limit, then the detection level is defined as the least of the Practical Quantitation Limits identified in NYSDEC's Analytical Detectability and Quantitation Guidelines for Selected Environmental Parameters, December 1988

2 Analysis for ***non-polar materials*** must be done by EPA method 1664 Rev. A. Non-Polar Material shall mean that portion of the oil and grease that is not eliminated from a solution containing N–Hexane, or any other extraction solvent the EPA shall prescribe, by silica gel absorption.

3 Analysis for PCB=s is required if ***both*** conditions listed below are met:
1) if proposed discharge ≥ 10,000 gpd;
2) if duration of a discharge > 10 days.
Analysis for PCB=s must be done by EPA method 608 with MDL=<65 ppt. PCB's (total) is the sum of PCB-1242 (Arochlor 1242), PCB-1254 (Arochlor 1254), PCB-1221 (Arochlor 1221), PCB-1232 (Arochlor 1232), PCB-1248 (Arochlor 1248), PCB-1260 (Arochlor 1260) and PCB-1016 (Arochlor 1016).

4 For discharge ≥ 10,000 gpd, the TSS limit is 350 mg/l. For discharge < 10,000gpd, the limit is determined on a case by case basis.

5 Analysis for Carbonaceous Biochemical Oxygen Demand (CBOD), Chloride, Total Solids and Total Nitrogen are required if proposed discharge ≥ 10,000 gpd.

ATTACHMENT 2

Applicable Regulations

Applicable regulations include, but are not limited to:

1. 49 CFR 100 to 179 - DOT Hazardous Materials Transport and Manifest System Requirements
2. New York State Department of Environmental Conservation (DEC), Spills Technology and Remediation Series (STARS) Memo #1
3. 6 NYCRR 360-1 DEC Solid Waste Management Facilities
4. 6 NYCRR 364- Waste Transporter permits
5. Local restrictions on transportation of waste/debris
6. 40 CFR 260 to 272 - Hazardous Waste Management (RCRA)
7. 6 NYCRR 371 - Identification and Listing of Hazardous Wastes
8. 6 NYCRR 372 - Hazardous Waste Manifest System and Related Standards for Generators, Transporters and Facilities
9. 6 NYCRR 373-1 - Hazardous Waste Treatment, Storage and Disposal Facility Permitting Requirements
10. 6 NYCRR 376 - Land Disposal Restrictions
11. Posted weight limitations on roads or bridges
12. Transportation Skills Programs, Inc. 1985 - Hazardous Materials and Waste Shipping Papers and Manifests
13. Other local restrictions on transportation of waste/debris
14. Occupational Safety and Health Administration (OSHA), Standards and Regulations, 29 CFR 1910 (General Industry)
15. OSHA 29 CFR 1910.120 Hazardous Waste Operations and Emergency Response
16. OSHA Safety and Health Standards 29 CFR 1926 (Construction Industry)
17. OSHA 29 CFR 1910.146 Confined Space Entry Standard
18. Standard Operating Safety Guidelines, EPA Office of Emergency and Remedial Response Publication, 9285.1-03
19. NIOSH / OSHA / USCG / EPA Occupational Safety and Health Guidance Manual for Hazardous Waste Site Activities (1986)
20. U.S. Department of Health and Human Services (DHHS) "NIOSH Sampling and Analytical Methods," DHHS (NIOSH) Publication 84-100
21. ANSI, Practice for Respiratory Protection, Z88.2 (1980)
22. ANSI, Emergency Eyewash and Shower Equipment, Z41.1 (1983)
23. ANSI, Protective Footwear, Z358.1 (1981)
24. ANSI, Physical Qualifications for Respirator Use, Z88.6 (1984)
25. ANSI, Practice for Occupational and Educational Eye and Face Protection, Z87.1 (1968)
26. Water Pollution Control Federation "Manual of Practice No. 1, Safety in Wastewater Works"

27. NFPA No. 327 "Standard Procedures for Cleaning and Safeguarding Small Tanks and Containers"
28. Occupational Safety and Health Act Confined Space Entry Standard 29 CFR 1910.146.87
29. Department of Transportation 49 CFR 100 through 179
30. Department of Transportation 49 CFR 387 (46 FR 30974, 47073)
31. Environmental Protection Agency 40 CFR 136 (41 FR 52779)
32. Environmental Protection Agency 40 CFR 262 and 761
33. Resource Conservation and Recovery Act (RCRA)
34. Any transporter of hazardous or non-hazardous materials shall be licensed in the State of New York and all other states traversed in accordance with all applicable regulations.

ATTACHMENT 3

Definitions

Contaminated Groundwater and Decontamination Fluids: Groundwater within the excavation trench or decontamination water that contains regulated compounds above the NYCDEP Discharge to Sanitary/Combined Sewer Effluent limits.

Disposal or Treatment Facility: A facility licensed to accept either non-hazardous regulated waste or hazardous waste for either treatment or disposal.

Exclusion Zone: Work area that will be limited to access by Contractor personnel specifically trained to enter the work area only. The exclusion zone will be set up to secure the area from the public and untrained personnel. The project health and safety program will apply to all construction personnel including persons entering the work area.

Hazard Assessment: An assessment of any physical hazards that may be encountered on a work site.

Hazardous Soils: Soils that exhibit any of the characteristics of a hazardous waste, namely ignitability, corrosivity, reactivity, and toxicity, as defined in 6 NYCRR Part 371, Section 371.3 and 40 CFR Section 261.

Hazardous Substance Evaluation: An evaluation of the possible or known presence of any hazardous substances that may be encountered on a job site. This evaluation is included in the Health and Safety Plan and will include the identification and description of any hazardous substances expected to be encountered. Material Safety Data Sheets (MSDS) will be included for each substance.

Health and Safety Plan: A plan employed at a work site that describes all the measures that will be taken to assure that all work is conducted in a safe manner, and that the health of the workers and the public will be insured.

Material Handling Plan: A plan outlining the methods that will be employed to handle, transport and dispose of contaminated materials.

Non-Hazardous Contaminated Soils: Soils which exhibit a distinct chemical or petroleum odor, or exhibit elevated photoionization detector readings but are not classified as hazardous waste under 6 NYCRR Part 371, Section 371.3 and 40 CFR Section 261.

New York State Health Department's Environmental Laboratory Approval Program: A program by which the state of New York approves and accredits environmental testing laboratories.

PCBs: Polychlorinated biphenyls are a group of toxic compounds commonly used as a coolant in transformers and other electrical components.

Photoionization Detector: A hand held instrument used to measure volatile organic compounds in air. The instrument ionizes the organic molecules through the use of an ultraviolet lamp.

RCRA Hazardous Waste Characteristics: Characteristics of a material which may indicate the material is hazardous. These include: ignitability corrosivity, reactivity, and toxicity.

Total Petroleum Hydrocarbons: An analytical procedure used to determine the total amount of petroleum compounds in a material.

ATTACHMENT 4

Phase II Subsurface Corridor Investigation Report

NO TEXT ON THIS PAGE

December 24, 2015

Mr. Jean M. Jean-Louis
Director, Office of Environmental and Geotechnical Services
New York City Department of Design and Construction
30-30 Thomson Avenue, 3rd Floor
Long Island City, NY 11101

Re: Phase II Subsurface Corridor Investigation (SCI) Letter Report for Rehabilitation of Astoria Trunk Water Main
41st Street between 25th Avenue and 31st Avenue, Queens, NY
Professional Services Contract PW335ES15
Contract Registration No. 20151405733
DDC Project No. QED1014
Task No. 10787
WOL No.: 10787-LBA-4-10010
Louis Berger Project No.: 3001040.046

Dear Mr. Jean-Louis:

Louis Berger and Assoc., P.C. (Louis Berger) has prepared this letter report for the New York City Department of Design and Construction (NYCDDC) to document the findings of a Phase II Subsurface Corridor Investigation (SCI) for the Rehabilitation of Astoria Trunk Water Main in Queens, New York (herein after referred to as the "Corridor"). The Phase II SCI was performed for a NYCDDC infrastructure project (QED1014) which consists of rehabilitation of the trunk water main along Crescent Street, 31st Avenue, and 41st Street. The Corridor is comprised of the following street segments:

Street Segments	Length (feet)
Crescent Street between 34th Avenue and 31st Avenue	2,061
31st Avenue between Crescent Street and 41st Street	3,350
41st Street between 31st Avenue and 25th Avenue	2,887

The proposed rehabilitation work includes slip-lining a new 48" trunk water main inside the existing 60" trunk water main and spot repairs of the combined sewer along the Corridor. The depth of excavation of the trench boxes for slip-lining the 48" trunk main inside 60" trunk water main ranges between 9 and 10.5 feet below grade (ftbg) along Crescent Street, 31st Avenue and 41st Street. The depth of excavation to perform localized repairs (spot repairs) on the combined sewers in the vicinity of the Corridor ranges between 11 and 20 ftbg. The Corridor location is identified on the Figure 1 Topographic Corridor Location Map.

HAZ - 41

Scope of Work

The Phase II SCI consisted of a field investigation, laboratory analyses, and the preparation of this letter report, which also include tables summarizing the laboratory analytical results and figures depicting boring locations, and significant site features, if applicable, the existence of any contamination occurrences and their potential migration. In order to adequately characterize soils for waste classification purposes along the Corridor, a Phase II SCI was completed by Louis Berger on November 24th, November 25th, and November 30th through December 4th, 2015. The investigation included the advancement of 36 soil borings (SB01 through SB36) to terminal depths ranging between 10 and 20 ftbg, with the exception of SB25, where refusal was encountered at 6.5 ftbg, and the collection of four (4) groundwater samples from existing 1-inch diameter observation wells (OW-7, OW-28, OW-43 and OW-56) installed in June of 2015 as part of a NYCDDC geotechnical investigation along the Corridor. The monitoring well OW-7 was constructed to a depth of 25 ftbg, OW-28 was constructed to a depth of 25 ftbg, OW-43 was constructed to a depth of 18 ftbg, and OW-56 was constructed to a depth of 17 ftbg. Furthermore, field conditions during the performance of this Phase II SCI resulted in the cancellation of three (3) borings: SB06 was cancelled due to soil conditions (boulders) prohibiting clearance to 6 ftbg; SB18 was cancelled due to intersecting sensitive subsurface utilities in the vicinity of the proposed boring location; and SB32 was cancelled with the approval of NYCDDC Project Manager due to time constraints. Additionally, groundwater was only encountered in two (2) of the four (4) existing observation wells and therefore, only two (2) groundwater samples (i.e., OW-7 and OW-28) were collected. Sample boring locations and environmental boring data are shown on Figure 2 and Table 1, respectively.

Drilling activities for the field investigation were performed by Cascade Drilling, L.P. dba Zebra Technical Services, LLC (Zebra) of Lynbrook, New York. Oversight of drilling activities was performed by Ms. Breanna Gribble, Project Scientist of Louis Berger, Ms. Bianca Caraballo, Environmental Technician of Louis Berger, Mr. John Lacanlale, Project Scientist of Louis Berger, and Mr. Nevin Diehl, Environmental Technician of Louis Berger.

All soil borings were advanced to their terminal depths using a Geoprobe® direct push drill rig. Prior to direct push advancement, borings were cleared to a depth of 6 ftbg with a vacuum device (i.e., Vactron®) and air-knife combination method to 6 ftbg. Soil was recovered using a 5-foot long, 2-inch diameter Macro Core® stainless steel sampler equipped with disposable acetate sleeves. Maps depicting each boring location are included in Attachment A.

Field screening of soils consisted of identifying visual and olfactory indicators of impacts, as well as screening for volatile organic compounds (VOCs) along the vertical length of the soil column with a photoionization detector (PID).

One (1) composite and one (1) grab soil sample were collected from each boring. The composite samples were comprised of soil from the entire boring column. The grab soil samples were collected from either the bottom 6-inch interval of borings where groundwater was not encountered or from the 6-inch interval above the water table in borings where groundwater was encountered. Composite samples were analyzed

for Polycyclic Aromatic Hydrocarbons (PAHs) by United States Environmental Protection Agency (USEPA) Method 8270C, Total Petroleum Hydrocarbons (TPHC-DRO/GRO) by USEPA 8015B, polychlorinated biphenyls (PCBs) by USEPA Method 8082A/608, TCLP Metals (RCRA 8) by USEPA Method 1311/6010B, and Resource Conservation and Recovery Act (RCRA) Characteristics, including ignitability reactivity and corrosivity, by USEPA Methods 9012B/9034, 1030/1010A, and 9045C, as well as Paint Filter Test by USEPA Method 9095B for waste classification purposes. The grab samples were analyzed for Target Compound List (TCL) VOCs by USEPA Method 8260C. Field-derived Quality Assurance/Quality Control samples (i.e., blind duplicates, equipment/rinsate blanks, and trip blanks) were not collected for this project.

Following collection, the samples were placed in pre-cleaned, laboratory-supplied glassware, stored in a cooler on ice and delivered to Hampton-Clarke/Veritech (HCV) Laboratory, a New York State Department of Health (NYSDOH) Environmental Laboratory Approval Program (ELAP)-certified analytical laboratory (No. 11408), via courier under proper chain-of-custody procedures. Upon completion of sampling, each boring was backfilled to grade with the material that was removed and then sealed with concrete, where appropriate. No soil waste was generated from the soil sampling activities.

In order to evaluate subsurface soil quality, laboratory analytical results were compared with regulatory standards identified in: (1) New York State Department of Environmental Conservation (NYSDEC) Subpart 375-6: Remedial Program Unrestricted, Restricted-Residential, and Commercial Use (Track 1 and Track 2) Soil Cleanup Objectives (SCOs) and (2) NYSDEC CP-51 Soil Cleanup Guidance Supplemental Soil Cleanup Objectives (SSCOs) to NYSDEC Subpart 375-6. The laboratory analytical results for the TCLP Metals and RCRA hazardous waste characteristics were compared with the Toxicity Characteristic Regulatory Levels for Hazardous Waste published in RCRA and 6 NYCRR Part 371. The analytical results of the groundwater samples were compared to: (1) the New York City Department of Environmental Protection (NYCDEP) Sewer Discharge Criteria.

Refer to Tables 2 through 4 for a summary of the detected analytes. The full laboratory deliverable can be found in Attachment B.

Summary of Findings

Based on the evaluation of the field screening data and the laboratory analytical results, and a comparison to applicable regulatory standards, the following findings are presented:

- No visual or olfactory evidence of contamination was observed in the soil at any of the boring locations and PID readings were not detected above background level in any of the boring locations;

- All soil samples were visually classified in the field using the Burmister Classification System, Unified Soil Classification System (USCS) and Munsell Rock Color charts. The Corridor was found to be underlain by 5 to 20 feet of non-native anthropogenic material (fill) and reworked native soils in 30 of the 33 borings. The fill layer and reworked native soils consisted mostly of moderate

HAZ-43

yellowish brown coarse to fine sand with little coarse to fine gravel and trace silt. Construction debris in the form of brick pieces, recycled concrete aggregate, and asphalt debris was observed within the borings. Fill material was not encountered in SB09, SB17, and SB23. In these locations the Corridor was found to be underlain by native soils comprised mostly of moderate yellowish brown coarse to fine sand with little coarse to fine gravel and trace silt which is consistent with the regional geology which is surficial soils underlain by Wisconsin-aged outwash sand and gravel. These deposits are generally between 10 and 20 feet in thickness consist of gravel with sand and is commonly overlain by a sand and silt.

- Groundwater was encountered in two (2) borings: SB02 on Crescent Street between 33rd Road and 34th Avenue at 11 ftbg, and in SB20 at the corner of 31st Avenue and 33rd Street at 17 ftbg. Bedrock was not encountered during this Phase II SCI;

- Laboratory results indicate that methylene chloride was detected below the Unrestricted Use (Track 1) SCO in nine (9) samples. Tetrachloroethene was detected well below the Unrestricted Use (Track 1) SCO in SB01 (0.002 parts per million (ppm)). No other VOCs were detectéd in the soil samples;

- Laboratory results indicate detection of several PAHs below the Unrestricted Use (Track 1) SCOs in all soil samples except SB02, SB07, SB08, SB12, SB13, SB14, SB16, SB20 through SB24, and SB27;

- Laboratory results indicate TPH concentrations were detected in soil samples SB04 (71 ppm), SB15 (81 ppm), SB17 (71 ppm), SB19 (280 ppm), SB25 (170 ppm), SB27 (120 ppm), and SB30 (91 ppm). No regulatory standard exists for TPH. TPH was not detected in any of the other soil samples;

- No PCBs were detected at concentrations above laboratory detection limits in any of the soil samples with the exception of SB11 (0.11 ppm) and SB27 (0.19 ppm), where detections were above the Unrestricted Use (Track 1);

- Laboratory results indicate that barium was detected in all soil samples, with the exception of SB09, SB11 and SB17, ranging from 0.29 to 0.63 ppm. No regulatory standard exists for RCRA and 6 NYCRR Part 371 TCLP limits for barium. Lead was detected in samples SB19 (0.17 ppm), SB25 (0.071 ppm), and SB31 (0.17 ppm) below the RCRA/6 NYCRR Part 371 TCLP limits. Lead was not detected in any of the other samples. Laboratory results indicate that the soil samples collected beneath the Corridor do not exhibit evidence of hazardous waste characteristics for toxicity;

- Laboratory analyses of all borings for RCRA Characteristics indicate that the soil samples collected along the Corridor do not exhibit evidence of hazardous waste characteristics for reactivity, corrosivity and ignitability;

- Analytical results of groundwater samples OW-7 and OW-28 showed no exceedances of NYCDEP Sewer Discharge Criteria, except for total suspended solids (TSS) in OW-28 where results were 1,400 mg/L, which exceeds the regulatory standard under certain conditions.

Conclusions

Based on the results of the field investigation and laboratory analytical results, the following conclusions are provided:

- Low-levels of methylene chloride were detected below the Unrestricted Use (Track 1) SCOs in nine (9) samples. Methylene chloride is a common laboratory contaminant and its presence may be attributed to cross-contamination from the laboratory and is not indicative of contamination in soil beneath the Corridor. Tetrachloroethene was detected well below the Unrestricted Use (Track 1) SCO in SB01 (0.002 ppm). The presence of tetrachloroethene may be attributed to past or current dry cleaning uses along the Corridor;

- During this Phase II SCI, the Corridor was found to be underlain by 5 to 20 feet of non-native anthropogenic material (fill) and reworked native soils in 30 of the 33 borings. Contaminants such as SVOCs and metals are commonly detected in historic fill and are usually products of incomplete combustion, and/or a result of diffuse anthropogenic pollution (DAP). The soil classification indicates that surficial soils of the area are characteristically found in urbanized areas that have been cut and filled;

- The laboratory analytical results indicate detections of diesel range total petroleum hydrocarbons in seven (7) samples (SB04, SB15, SB17, SB19, SB25, SB27, and SB30) with concentrations ranging from 71 ppm in samples SB04 and SB17 to 280 ppm in sample SB19. No regulatory standard exists for TPH;

- Lithology shows the presence of historic fill material in SB11 and SB27; therefore, PCB exceedances may be attributed to contaminants in the fill material such as transformer oils, dielectric fluids, and ballasts, which have historically been known to contain PCBs;

- Laboratory results indicate that the soil samples collected beneath the Corridor do not exhibit evidence of hazardous waste characteristics for toxicity, reactivity, corrosivity and ignitability; and,

- Analytical results of groundwater samples OW-7 and OW-28 showed no exceedances of NYCDEP Sewer Discharge Criteria, except for TSS in OW-28 where results were 1,400 mg/L, which exceeds the regulatory standard under certain conditions. If the groundwater discharge into the sanitary or combined sewer is greater than or equal to 10,000 gallons per day (gpd), the TSS limit is 350 mg/L. However, if the discharge is less than 10,000 gpd, the limit is determined on a case by case basis. One (1) VOC (tetrachloroethene) was detected in sample OW-7, and one (1) VOC (chloroform)

and one (1) metal (lead) were detected in OW-28, below the NYCDEP Sewer Discharge Criteria in all instances.

Recommendations

Based on the results of the field investigation and laboratory analytical results, Louis Berger recommends the following:

- The Contract documents should identify provisions for managing, handling, transporting and disposing of nonhazardous soil and nonhazardous impacted soil and nonhazardous petroleum as a contingency. The Contractor should be required to submit a Material Handling Plan, to identify the specific protocol and procedures that will be employed to manage the waste in accordance with applicable regulations;

- Dust control procedures are recommended during excavation activities to minimize the creation and dispersion of fugitive airborne dust. The Contractor may implement dust control measures to minimize potential airborne contaminants released into the ambient environment as a direct result of construction activities. If further sampling reveals evidence of impacted soil above the established regulatory criteria, implementation of a Community Air Monitoring Plan (CAMP) would be recommended in accordance with NYSDEC DER-10 Regulations. The CAMP requires real-time monitoring for particulates (i.e., dust) at the downwind perimeter of each designated work area when certain activities are in progress at contaminated sites. The CAMP is intended to provide a measure of protection for the area of the surrounding community located downwind from the potential release of airborne contaminants. Specific requirements should be reviewed for each situation and coordinate with the New York State Department of Health (NYSDOH) to ensure proper applicability;

- Based on the observed depth to groundwater (11 to 17 ftbg), dewatering may be necessary for the proposed excavation activities. If dewatering is necessary, the contractor will be required to obtain a NYCDEP sewer discharge permit and perform sampling and laboratory analysis prior to discharge into sanitary and combined sewers;

- In addition, if discharge into surface waters (or storm sewers which ultimately discharge to surface waters) is required during dewatering, it should be performed under the appropriate NYSDEC State Pollutant Discharge Elimination System (SPDES) permit. Additional sampling and laboratory analysis may be required to satisfy NYSDEC requirements prior to discharge into storm sewers; and,

- Before beginning any excavation activity, the contractor should submit a site-specific health and safety plan (HASP) that will meet the requirements set forth by the Occupational, Safety and Health Administration (OSHA), the NYSDOH and any other applicable regulations. The HASP should identify the possible locations and risks associated with the potential contaminants that may be

HAZ-46

encountered, and the administrative and engineering controls that will be utilized to mitigate concerns (i.e., dust control procedures for SVOCs and metals).

Thank you for the opportunity to provide service for the NYCDDC. We look forward to continued service. Please contact me at +1.973.407.1360 or by e-mail at fali@louisberger.com with any comments.

Louis Berger and Assoc., P.C.

Report Prepared By:

Fameeda Ali, CHMM
Project Manager

Report Reviewed By:

Michael J. McCloskey, PG
QA/QC Manager

Figures	1	Topographic Corridor Location Map
	2	Boring Location Plan

Tables	1	Summary of Environmental Boring Data
	2	Summary of TCL VOCs Detected in Soil
	3	Summary of Waste Classification Results in Soil
	4	Groundwater Quality Compared to NYCDEP Limitations for Effluent to Sanitary or Combined Sewers

Attachments	A	Boring Location Plan
	B	Laboratory Analytical Results

TABLES

Table 1. Summary of Environmental Boring Data
Phase II Subsurface Corridor Investigation for Rehabilitation of Astoria Trunk Water Main
Queens, New York

Boring No.	Sample ID	High PID (ppm)	Sample Interval (ftbg)	Total VOCs (mg/kg)	Total PAHs (mg/kg)	TCLP Metals Exceed (Yes/No)[1]	Depth to Water (ftbg)	Total Depth (ftbg)	Other Comments
SB01	SB01	<1	11.5 - 12.0	0.008	--	No	NE	15.0	No visual/olfactory signs of contamination observed.
			0 - 12.0	--	0.332				
SB02	SB02	<1	10.5 - 11.0	0.015	--	No	11.0	15.0	No visual/olfactory signs of contamination observed.
			0 - 14.5	--	ND				
SB03	SB03	<1	9.5 - 10.0	ND	--	No	NE	10.0	No visual/olfactory signs of contamination observed.
			0 - 10.0	--	0.535				
SB04	SB04	<1	13.5 - 14.0	ND	--	No	NE	15.0	No visual/olfactory signs of contamination observed.
			0 - 14.0	--	0.390				
SB05	SB05	<1	13.0 - 13.5	ND	--	No	NE	15.0	No visual/olfactory signs of contamination observed.
			0 - 13.5	--	1.512				
SB06	SB06	N/A	--	--	--	N/A	N/A	N/A	Boring canceled due to soil conditions (boulders) prohibiting clearance to 6 ft bgs
			--	--	--				
SB07	SB07	<1	13.0 - 13.5	ND	--	No	NE	15.0	No visual/olfactory signs of contamination observed.
			0 - 13.5	--	ND				
SB08	SB08	<1	13.5 - 14.0	ND	--	No	NE	15.0	No visual/olfactory signs of contamination observed.
			0 - 14.0	--	ND				
SB09	SB09	<1	11.0 - 11.5	ND	--	No	NE	15.0	No visual/olfactory signs of contamination observed.
			0 - 11.5	--	2.277				
SB10	SB10	<1	8.5 - 9.0	ND	--	No	NE	10.0	No visual/olfactory signs of contamination observed.
			0 - 9.0	--	0.178				
SB11	SB11	<1	8.5 - 9.0	ND	--	No	NE	10.0	No visual/olfactory signs of contamination observed.
			0 - 9.0	--	0.093				
SB12	SB12	<1	9.0 - 9.5	ND	--	No	NE	10.0	No visual/olfactory signs of contamination observed.
			0 - 9.5	--	ND				

Notes:
1. TCLP metal(s) exceeds RCRA Hazardous Waste Levels.
All soil samples were analyzed for Target Compound List (TCL) Volatile Organic Compounds, Polycyclic Aromatic Hydrocarbons (PAHs) Polychlorinated Biphenyls (PCBs), Toxicity Characteristic Leaching Procedure (TCLP) Metals and Total Petroleum Hydrocarbons.
PID = Photoionization detector
ND = Not Detected
NE = Not Encountered
N/A = Not Applicable
All concentrations are in parts per million or milligrams per kilogram (ppm or mg/kg)
ftbg = feet below grade

Table 1. Summary of Environmental Boring Data
Phase II Subsurface Corridor Investigation for Rehabilitation of Astoria Trunk Water Main
Queens, New York

Boring No.	Sample ID	High PID (ppm)	Sample Interval (ftbg)	Total VOCs (mg/kg)	Total PAHs (mg/kg)	TCLP Metals Exceed (Yes/No)[1]	Depth to Water (ftbg)	Total Depth (ftbg)	Other Comments
SB13	SB13	<1	19.0 - 19.5	0.007	--	No	NE	20.0	No visual/olfactory signs of contamination observed.
			0 - 19.5	--	ND				
SB14	SB14	<1	8.5 - 9.0	ND	--	No	NE	10.0	No visual/olfactory signs of contamination observed.
			0 - 9.0	--	ND				
SB15	SB15	<1	7.5 - 8.0	ND	--	No	NE	10.0	No visual/olfactory signs of contamination observed.
			0 - 8.0	--	5.111				
SB16	SB16	<1	19.0 - 19.5	ND	--	No	NE	20.0	No visual/olfactory signs of contamination observed.
			0 - 19.5	--	ND				
SB17	SB17	<1	7.5 - 8.0	ND	--	No	NE	10.0	No visual/olfactory signs of contamination observed.
			0 - 8.0	--	0.261				
SB18	SB18	N/A	--	ND	--	N/A	N/A	N/A	Boring canceled due to numerous utilities in the proposed location
			--	--	--				
SB19	SB19	<1	7.5 - 8.0	ND	--	No	NE	10.0	No visual/olfactory signs of contamination observed.
			0 - 8.0	--	2.052				
SB20	SB20	<1	16.5 - 17.0	0.028	--	No	17.0	20.0	No visual/olfactory signs of contamination observed.
			0 - 20.0	--	ND				
SB21	SB21	<1	19.0 - 19.5	ND	--	No	NE	20.0	No visual/olfactory signs of contamination observed.
			0 - 19.5	--	ND				
SB22	SB22	<1	18.0 - 18.5	ND	--	No	NE	20.0	No visual/olfactory signs of contamination observed.
			0 - 18.5	--	ND				
SB23	SB23	<1	8.0 - 8.5	0.0032	--	No	NE	10.0	No visual/olfactory signs of contamination observed.
			0 - 8.5	--	ND				
SB24	SB24	<1	7.0 - 7.5	0.005	--	No	NE	10.0	No visual/olfactory signs of contamination observed.
			0 - 7.5	--	ND				

Notes:
1. TCLP metal(s) exceeds RCRA Hazardous Waste Levels.
All soil samples were analyzed for Target Compound List (TCL) Volatile Organic Compounds, Polycyclic Aromatic Hydrocarbons (PAHs) Polychlorinated Biphenyls (PCBs), Toxicity Characteristic Leaching Procedure (TCLP) Metals and Total Petroleum Hydrocarbons.
PID = Photoionization detector
ND = Not Detected
NE = Not Encountered
N/A = Not Applicable
All concentrations are in parts per million or milligrams per kilogram (ppm or mg/kg)
ftbg = feet below grade

Table 1. Summary of Environmental Boring Data
Phase II Subsurface Corridor Investigation for Rehabilitation of Astoria Trunk Water Main
Queens, New York

Boring No.	Sample ID	High PID (ppm)	Sample Interval (ftbg)	Total VOCs (mg/kg)	Total PAHs (mg/kg)	TCLP Metals Exceed (Yes/No)[1]	Depth to Water (ftbg)	Total Depth (ftbg)	Other Comments
SB25	SB25	<1	6.0 - 6.5	ND	–	No	NE	6.5	No visual/olfactory signs of contamination observed. Refusal at 6.5 ft bgs
			0 - 6.5	–	1.738				
SB26	SB26	<1	6.5 - 7.0	0.0031	–	No	NE	10.0	No visual/olfactory signs of contamination observed.
			0 - 7.0	–	0.736				
SB27	SB27	<1	7.0 - 7.5	0.0024	–	No	NE	10.0	No visual/olfactory signs of contamination observed.
			0 - 7.5	–	ND				
SB28	SB28	<1	18.5 - 19.0	ND	–	No	NE	20.0	No visual/olfactory signs of contamination observed.
			0 - 19.0	–	0.076				
SB29	SB29	<1	13.5 - 14.0	ND	–	No	NE	15.0	No visual/olfactory signs of contamination observed.
			0 - 14.0	–	0.090				
SB30	SB30	<1	8.5 - 9.0	ND	–	No	NE	10.0	No visual/olfactory signs of contamination observed.
			0 - 9.0	–	3.874				
SB31	SB31	<1	13.5 - 14.0	ND	–	No	NE	15.0	No visual/olfactory signs of contamination observed.
			0 - 14.0	–	2.771				
SB32	SB32	N/A	–	ND	–	N/A	N/A	N/A	Boring canceled due to time constraints
			–	–	–				
SB33	SB33	<1	8.5 - 9.0	ND	–	No	NE	10.0	No visual/olfactory signs of contamination observed.
			0 - 9.0	–	0.418				
SB34	SB34	<1	8.0 - 8.5	ND	–	No	NE	10.0	No visual/olfactory signs of contamination observed.
			0 - 8.5	–	0.131				
SB35	SB35	<1	8 - 8.5	0.0039	–	No	NE	10.0	No visual/olfactory signs of contamination observed.
			0 - 8.5	–	0.078				
SB36	SB36	<1	7.5 - 8.0	ND	–	No	NE	10.0	No visual/olfactory signs of contamination observed.
			0 - 8.0	–	1.222				
NA	OW-7	<1	18.0	N/A	N/A	N/A	18.0	N/A	Groundwater sample collected from permanent monitoring well previously installed as part of a geotechnical boring program for DDC.
NA	OW-28	<1	17.8	N/A	N/A	N/A	17.8	N/A	Groundwater sample collected from permanent monitoring well previously installed as part of a geotechnical boring program for DDC.

Notes:
1. TCLP metal(s) exceeds RCRA Hazardous Waste Levels.
All soil samples were analyzed for Target Compound List (TCL) Volatile Organic Compounds, Polycyclic Aromatic Hydrocarbons (PAHs) Polychlorinated Biphenyls (PCBs), Toxicity Characteristic Leaching Procedure (TCLP) Metals and Total Petroleum Hydrocarbons.
PID = Photoionization detector
ND = Not Detected
NE = Not Encountered
N/A = Not Applicable
All concentrations are in parts per million or milligrams per kilogram (ppm or mg/kg)
ftbg = feet below grade

Table 2. Summary of Target Compound List Volatile Organic Compounds Detected in Soil
Phase II Subsurface Corridor Investigation for Rehabilitation of Astoria Trunk Water Main
Queens, New York

TCL VOCs	Unrestricted Use (Track 1) Soil Cleanup Objectives (SCOs)	Commercial Use (Track 2) Soil Cleanup Objectives (SCOs)	Restricted Residential Use (Track 2) Soil Cleanup Objectives (SCOs)	CP-51/Soil Cleanup Guidance Residential Supplemental Soil Cleanup Objectives	Sample ID, Date Collected, and Depth											
					SB01	SB02	SB03	SB04	SB05	SB07	SB08	SB09	SB10	SB11	SB12	SB13
					12/3/2015	12/3/2015	12/2/2015	12/2/2015	12/2/2015	12/2/2015	12/2/2015	12/2/2015	12/2/2015	12/2/2015	12/2/2015	12/3/2015
					11.5 - 12	10.5 - 11	9.5 - 10	13.5 - 14	13.0 - 13.5	13.5 - 14.0	13.5 - 14.0	11.0 - 11.5	8.5 - 9.0	8.5 - 9.0	9.0 - 9.5	19.0 - 19.5
Methylene chloride	0.05	500	100	NS	0.006	0.015	ND	ND	ND	ND	ND	ND	ND	ND	ND	0.0065
Tetrachloroethene	1.3	150	19	NS	0.002	ND	ND	ND	ND	ND	ND	ND	ND	ND	ND	ND

TCL VOCs	Unrestricted Use (Track 1) Soil Cleanup Objectives (SCOs)	Commercial Use (Track 2) Soil Cleanup Objectives (SCOs)	Restricted Residential Use (Track 2) Soil Cleanup Objectives (SCOs)	Restricted Residential Use (Track 2) Soil Cleanup Objectives (SCOs)	Sample ID, Date Collected, and Depth											
					SB14	SB15	SB16	SB17	SB19	SB20	SB21	SB22	SB23	SB24	SB25	SB26
					12/3/2015	12/3/2015	12/3/2015	12/3/2015	12/3/2015	12/4/2015	12/4/2015	12/4/2015	12/4/2015	12/4/2015	12/4/2015	12/4/2015
					8.5 - 9.0	7.5 - 8.0	19.0 - 19.5	7.5 - 8.0	7.5 - 8.0	16.5 - 17.0	19.0 - 19.5	18.0 - 18.5	8.0 - 8.5	7.0 - 7.5	6.0 - 6.5	6.5 - 7.0
Methylene chloride	0.05	500	100	NS	ND	ND	ND	ND	ND	0.028	ND	ND	0.0032	0.005	ND	0.0031
Tetrachloroethene	1.3	150	19	NS	ND	ND	ND	ND	ND	ND	ND	ND	ND	ND	ND	ND

TCL VOCs	Unrestricted Use (Track 1) Soil Cleanup Objectives (SCOs)	Commercial Use (Track 2) Soil Cleanup Objectives (SCOs)	Restricted Residential Use (Track 2) Soil Cleanup Objectives (SCOs)	Restricted Residential Use (Track 2) Soil Cleanup Objectives (SCOs)	Sample ID, Date Collected, and Depth								
					SB27	SB28	SB29	SB30	SB31	SB33	SB34	SB35	SB36
					12/4/2015	12/4/2015	12/4/2015	12/4/2015	12/4/2015	12/4/2015	12/4/2015	12/4/2015	12/4/2015
					7.0 - 7.5	18.5 - 19.0	13.5 - 14.0	8.5 - 9.0	8.5 - 9.0	8.0 - 8.5	8.0 - 8.5	8.0 - 8.5	7.5 - 8.0
Methylene chloride	0.05	500	100	NS	0.0024	ND	ND	ND	ND	ND	ND	0.0039	ND
Tetrachloroethene	1.3	150	19	NS	ND	ND	ND	ND	ND	ND	ND	ND	ND

Notes:
All concentrations are in parts per million or milligrams per kilogram (ppm or mg/kg)
ND = Compound not detected above method detection limit (see attached lab report for mdl's)
NS = No Standard
SCOs = Soil Cleanup Objectives as per the NYSDEC Regulations 6 NYCRR Subpart 375-6 Remedial Program Soil Cleanup Objectives (December 14, 2006)
CP51/Soil Cleanup Guidance = NYSDEC Supplemental Soil Cleanup Objectives (October 2010)
Underline = Concentration exceeds Unrestricted Use (Track 1) Soil Cleanup Objectives

HA2-52

Table 3. Summary of Waste Classification Results in Soil
Phase II Subsurface Corridor Investigation for Rehabilitation of Astoria Trunk Water Main
Queens, New York

Analyte	Unrestricted Use (Track 1) Soil Cleanup Objectives (SCOs)	Commercial Use (Track 2) Soil Cleanup Objectives (SCOs)	Restricted Residential Use (Track 2) Soil Cleanup Objectives (SCOs)	CP-51/Soil Cleanup Guidance Residential Supplemental Soil Cleanup Objectives	Sample ID, Date Collected, and Depth											
					SB01	SB02	SB03	SB04	SB05	SB07	SB08	SB09	SB10	SB11	SB12	SB13
					12/3/2015	12/3/2015	12/2/2015	12/2/2015	12/2/2015	12/2/2015	12/2/2015	12/2/2015	12/2/2015	12/2/2015	12/2/2015	12/3/2015
					11.5 - 12	10.5 - 11	9.5 - 10	13.5 - 14	13.0 - 13.5	13.5 - 14.0	13.5 - 14.0	11.0 - 11.5	8.5 - 9.0	8.5 - 9.0	9.0 - 9.5	19.0 - 19.5
Polycyclic Aromatic Hydrocarbons (PAHs)																
2-Methylnaphthalene	NS	NS	NS	NS	ND	ND	ND	ND	ND	ND	ND	ND	ND	ND	ND	ND
Acenaphthene	20	500	100	NS	ND	ND	ND	ND	ND	ND	ND	ND	ND	ND	ND	ND
Acenaphthylene	100	500	100	NS	ND	ND	ND	ND	ND	ND	ND	ND	ND	ND	ND	ND
Anthracene	100	500	100	NS	ND	ND	ND	ND	ND	ND	ND	ND	ND	ND	ND	ND
Benzo[a]anthracene	1	5.6	1	NS	0.049	ND	0.061	0.044	0.16	ND	ND	0.27	ND	ND	ND	ND
Benzo[a]pyrene	1	1	1	NS	0.041	ND	0.054	ND	0.16	ND	ND	0.24	ND	ND	ND	ND
Benzo[b]fluoranthene	1	5.6	1	NS	0.061	ND	0.088	0.045	0.21	ND	ND	0.34	ND	ND	ND	ND
Benzo[g,h,i]perylene	100	500	100	NS	ND	ND	0.048	ND	0.1	ND	ND	0.15	ND	ND	ND	ND
Benzo[k]fluoranthene	0.8	56	3.9	NS	ND	ND	ND	ND	0.065	ND	ND	0.11	ND	ND	ND	ND
Chrysene	1	56	3.9	NS	0.044	ND	0.058	0.043	0.14	ND	ND	0.23	ND	ND	ND	ND
Dibenzo[a,h]anthracene	0.33	0.56	0.33	NS	ND	ND	ND	ND	0.042	ND	ND	0.052	ND	ND	ND	ND
Fluoranthene	100	500	100	NS	0.065	ND	0.084	0.074	0.21	ND	ND	0.28	0.078	0.04	ND	ND
Fluorene	30	500	100	NS	ND	ND	ND	ND	ND	ND	ND	ND	ND	ND	ND	ND
Indeno(1,2,3-C,D)Pyrene	0.5	5.6	0.5	NS	ND	ND	0.043	ND	0.093	ND	ND	0.14	ND	ND	ND	ND
Naphthalene	12	500	100	NS	ND	ND	ND	ND	ND	ND	ND	ND	ND	ND	ND	ND
Phenanthrene	100	500	100	NS	ND	ND	ND	0.074	0.042	ND	ND	0.085	ND	ND	ND	ND
Pyrene	100	500	100	NS	0.072	ND	0.099	0.11	0.29	ND	ND	0.38	0.1	0.053	ND	ND
Polychlorinated biphenyls (PCBs)																
Total PCBs	0.1	1	1	NS	ND	ND	ND	ND	ND	ND	ND	ND	ND	0.11	ND	ND
Total petroleum hydrocarbon (TPH)																
TPH - Gasoline Range Organics	NS	NS	NS	NS	ND	ND	ND	ND	ND	ND	ND	ND	ND	ND	ND	ND
TPH - Diesel Range Organics	NS	NS	NS	NS	ND	ND	ND	71	ND	ND	ND	ND	ND	ND	ND	ND

Notes:
All concentrations are in parts per million or milligrams per kilogram (ppm or mg/kg)
ND = Compound not detected above method detection limit (see attached lab report for mdl's)
SCOs = Soil Cleanup Objectives as per the NYSDEC Regulations 6 NYCRR Subpart 375-6 Remedial Program Soil Cleanup Objectives (December 14, 2006)
CP51/Soil Cleanup Guidance = NYSDEC Supplemental Soil Cleanup Objectives (October 2010)
NS = No Standard
Underline = Concentration exceeds Unrestricted Use (Track 1) Soil Cleanup Objectives

HA2-53

Table 3. Summary of Waste Classification Results in Soil
Phase II Subsurface Corridor Investigation for Rehabilitation of Astoria Trunk Water Main
Queens, New York

Analyte	Unrestricted Use (Track 1) Soil Cleanup Objectives (SCOs)	Commercial Use (Track 2) Soil Cleanup Objectives (SCOs)	Restricted Residential Use (Track 2) Soil Cleanup Objectives (SCOs)	CP-51/Soil Cleanup Guidance Residential Supplemental Soil Cleanup Objectives	Sample ID, Date Collected, and Depth											
					SB14	SB15	SB16	SB17	SB19	SB20	SB21	SB22	SB23	SB24	SB25	SB26
					12/3/2015	12/3/2015	12/3/2015	12/3/2015	12/3/2015	12/4/2015	12/4/2015	12/4/2015	12/4/2015	12/4/2015	12/4/2015	12/4/2015
					8.5 - 9.0	7.5 - 8.0	19.0 - 19.5	7.5 - 8.0	7.5 - 8.0	16.5 - 17.0	19.0 - 19.5	18.0 - 18.5	8.0 - 8.5	7.0 - 7.5	6.0 - 6.5	6.5 - 7.0
Polycyclic Aromatic Hydrocarbons (PAHs)																
2-Methylnaphthalene	NS	NS	NS	NS	ND	ND	ND	ND	ND	ND	ND	ND	ND	ND	0.039	ND
Acenaphthene	20	500	100	NS	ND	ND	ND	ND	ND	ND	ND	ND	ND	ND	0.054	ND
Acenaphthylene	100	500	100	NS	ND	0.1	ND	ND	ND	ND	ND	ND	ND	ND	0.036	ND
Anthracene	100	500	100	NS	ND	0.062	ND	ND	0.044	ND	ND	ND	ND	ND	0.07	ND
Benzo[a]anthracene	1	5.6	1	NS	ND	0.48	ND	0.053	0.21	ND	ND	ND	ND	ND	0.1	0.067
Benzo[a]pyrene	1	1	1	NS	ND	0.61	ND	0.051	0.17	ND	ND	ND	ND	ND	0.14	0.076
Benzo[b]fluoranthene	1	5.6	1	NS	ND	0.72	ND	0.062	0.22	ND	ND	ND	ND	ND	0.18	0.092
Benzo[g,h,i]perylene	100	500	100	NS	ND	0.51	ND	ND	0.13	ND	ND	ND	ND	ND	0.14	0.074
Benzo[k]fluoranthene	0.8	56	3.9	NS	ND	0.21	ND	ND	0.084	ND	ND	ND	ND	ND	0.055	ND
Chrysene	1	56	3.9	NS	ND	0.51	ND	0.054	0.19	ND	ND	ND	ND	ND	0.12	0.066
Dibenzo[a,h]anthracene	0.33	0.56	0.33	NS	ND	0.11	ND	ND	0.044	ND	ND	ND	ND	ND	0.05	ND
Fluoranthene	100	500	100	NS	ND	0.45	ND	ND	0.33	ND	ND	ND	ND	ND	0.15	0.098
Fluorene	30	500	100	NS	ND	ND	ND	ND	ND	ND	ND	ND	ND	ND	0.053	ND
Indeno(1,2,3-C,D)Pyrene	0.5	5.6	0.5	NS	ND	0.4	ND	ND	0.11	ND	ND	ND	ND	ND	0.11	0.058
Naphthalene	12	500	100	NS	ND	0.019	ND	ND	ND	ND	ND	ND	ND	ND	0.041	ND
Phenanthrene	100	500	100	NS	ND	0.15	ND	ND	0.17	ND	ND	ND	ND	ND	0.19	0.075
Pyrene	100	500	100	NS	ND	0.78	ND	0.041	0.35	ND	ND	ND	ND	ND	0.21	0.13
Polychlorinated biphenyls (PCBs)																
Total PCBs	0.1	1	1	NS	ND	ND	ND	ND	ND	ND	ND	ND	ND	ND	ND	ND
Total petroleum hydrocarbon (TPH)																
TPH - Gasoline Range Organics	NS	NS	NS	NS	ND	ND	ND	ND	ND	ND	ND	ND	ND	ND	ND	ND
TPH - Diesel Range Organics	NS	NS	NS	NS	ND	81	ND	71	280	ND	ND	ND	ND	ND	170	ND

Notes:
All concentrations are in parts per million or milligrams per kilogram (ppm or mg/kg)
ND = Compound not detected above method detection limit (see attached lab report for mdl's)
SCOs = Soil Cleanup Objectives as per the NYSDEC Regulations 6 NYCRR Subpart 375-6 Remedial Program Soil Cleanup Objectives (December 14, 2006)
CP51/Soil Cleanup Guidance = NYSDEC Supplemental Soil Cleanup Objectives (October 2010)
NS = No Standard
Underline = Concentration exceeds Unrestricted Use (Track 1) Soil Cleanup Objectives

HA2 - 54

Table 3. Summary of Waste Classification Results in Soil
Phase II Subsurface Corridor Investigation for Rehabilitation of Astoria Trunk Water Main
Queens, New York

Analyte	Unrestricted Use (Track 1) Soil Cleanup Objectives (SCOs)	Commercial Use (Track 2) Soil Cleanup Objectives (SCOs)	Restricted Residential Use (Track 2) Soil Cleanup Objectives (SCOs)	CP-51/Soil Cleanup Guidance Residential Supplemental Soil Cleanup Objectives	Sample ID, Date Collected, and Depth								
					SB27	SB28	SB29	SB30	SB31	SB33	SB34	SB35	SB36
					12/4/2015	12/4/2015	12/4/2015	12/4/2015	12/4/2015	12/4/2015	12/4/2015	12/4/2015	12/4/2015
					7.0 - 7.5	18.5 - 19.0	13.5 - 14.0	8.5 - 9.0	8.5 - 9.0	8.0 - 8.5	8.0 - 8.5	8.0 - 8.5	7.5 - 8.0
Polycyclic Aromatic Hydrocarbons (PAHs)													
2-Methylnaphthalene	NS	NS	NS	NS	ND	ND	ND	0.087	ND	ND	ND	ND	ND
Acenaphthene	20	500	100	NS	ND	ND	ND	0.074	ND	ND	ND	ND	ND
Acenaphthylene	100	500	100	NS	ND	ND	ND	ND	ND	ND	ND	ND	ND
Anthracene	100	500	100	NS	ND	ND	ND	0.2	0.073	ND	ND	ND	ND
Benzo[a]anthracene	1	5.6	1	NS	ND	ND	ND	0.3	0.24	0.042	ND	ND	0.14
Benzo[a]pyrene	1	1	1	NS	ND	ND	ND	0.22	0.21	ND	ND	ND	0.097
Benzo[b]fluoranthene	1	5.6	1	NS	ND	ND	0.052	0.28	0.26	0.048	ND	0.036	0.13
Benzo[g,h,i]perylene	100	500	100	NS	ND	ND	ND	0.16	0.14	ND	ND	ND	0.075
Benzo[k]fluoranthene	0.8	56	3.9	NS	ND	ND	ND	0.1	0.1	ND	ND	ND	0.043
Chrysene	1	56	3.9	NS	ND	ND	ND	0.27	0.21	0.049	0.045	ND	0.13
Dibenzo[a,h]anthracene	0.33	0.56	0.33	NS	ND	ND	ND	0.042	0.048	ND	ND	ND	ND
Fluoranthene	100	500	100	NS	ND	0.036	ND	0.55	0.46	0.088	0.037	ND	0.18
Fluorene	30	500	100	NS	ND	ND	ND	0.098	ND	ND	ND	ND	ND
Indeno(1,2,3-C,D)Pyrene	0.5	5.6	0.5	NS	ND	ND	ND	0.13	0.13	ND	ND	ND	0.057
Naphthalene	12	500	100	NS	ND	ND	ND	0.073	ND	ND	ND	ND	ND
Phenanthrene	100	500	100	NS	ND	ND	ND	0.74	0.44	0.095	ND	ND	0.14
Pyrene	100	500	100	NS	ND	0.04	0.038	0.55	0.46	0.096	0.049	0.042	0.23
Polychlorinated biphenyls (PCBs)													
Total PCBs	0.1	1	1	NS	0.19	ND	ND	ND	ND	ND	ND	ND	ND
Total petroleum hydrocarbon (TPH)													
TPH - Gasoline Range Organics	NS	NS	NS	NS	ND	ND	ND	ND	ND	ND	ND	ND	ND
TPH - Diesel Range Organics	NS	NS	NS	NS	120	ND	ND	91	ND	ND	ND	ND	ND

Notes:
All concentrations are in parts per million or milligrams per kilogram (ppm or mg/kg)
ND = Compound not detected above method detection limit (see attached lab report for mdl's)
SCOs = Soil Cleanup Objectives as per the NYSDEC Regulations 6 NYCRR Subpart 375-6 Remedial Program Soil Cleanup Objectives (December 14, 2006)
CP51/Soil Cleanup Guidance = NYSDEC Supplemental Soil Cleanup Objectives (October 2010)
NS = No Standard
Underline = Concentration exceeds Unrestricted Use (Track 1) Soil Cleanup Objectives

HA2-55

Table 3. Summary of Waste Classification Results in Soil
Phase II Subsurface Corridor Investigation for Rehabilitation of Astoria Trunk Water Main
Queens, New York

Analyte	Unrestricted Use (Track 1) Soil Cleanup Objectives (SCOs)	Commercial Use (Track 2) Soil Cleanup Objectives (SCOs)	Restricted Residential Use (Track 2) Soil Cleanup Objectives (SCOs)	Resource Conservation and Recovery Act (RCRA) Hazardous Waste Levels (mg/L)	Sample ID, Date Collected, and Depth											
					SB01	SB02	SB03	SB04	SB05	SB07	SB08	SB09	SB10	SB11	SB12	SB13
					12/3/2015	12/3/2015	12/2/2015	12/2/2015	12/2/2015	12/2/2015	12/2/2015	12/2/2015	12/2/2015	12/2/2015	12/2/2015	12/3/2015
					11.5 - 12	10.5 - 11	9.5 - 10	13.5 - 14	13.0 - 13.5	13.5 - 14.0	13.5 - 14.0	11.0 - 11.5	8.5 - 9.0	8.5 - 9.0	9.0 - 9.5	19.0 - 19.5
RCRA (including TCLP metals)																
pH	NS	NS	NS	≥ 2 and ≤ 12.5*	8.4	8.3	7.4	9.1	8.8	12	8.6	8.2	8.3	7.1	12	7.7
Ignitability	NS	NS	NS	> 140 °F**	NEG	NEG	NEG	NEG	NEG	NEG	NEG	NEG	NEG	NEG	NEG	NEG
Paint Filter Liquid	NS	NS	NS	NS	NEG	NEG	NEG	NEG	NEG	NEG	NEG	NEG	NEG	NEG	NEG	NEG
Barium	350	400	400	NS	0.63	0.54	0.31	0.5	0.41	0.35	0.3	0.25 U	0.3	0.25 U	0.31	0.32
Lead	63	1,000	400	5	ND	ND	ND	ND	ND	ND	ND	ND	ND	ND	ND	ND

Analyte	Unrestricted Use (Track 1) Soil Cleanup Objectives (SCOs)	Commercial Use (Track 2) Soil Cleanup Objectives (SCOs)	Restricted Residential Use (Track 2) Soil Cleanup Objectives (SCOs)	Resource Conservation and Recovery Act (RCRA) Hazardous Waste Levels (mg/L)	Sample ID, Date Collected, and Depth											
					SB14	SB15	SB16	SB17	SB19	SB20	SB21	SB22	SB23	SB24	SB25	SB26
					12/3/2015	12/3/2015	12/3/2015	12/3/2015	12/3/2015	12/4/2015	12/4/2015	12/4/2015	12/4/2015	12/4/2015	12/4/2015	12/4/2015
					8.5 - 9.0	7.5 - 8.0	19.0 - 19.5	7.5 - 8.0	7.5 - 8.0	16.5 - 17.0	19.0 - 19.5	18.0 - 18.5	8.0 - 8.5	7.0 - 7.5	6.0 - 6.5	6.5 - 7.0
RCRA (including TCLP metals)																
pH	NS	NS	NS	≥ 2 and ≤ 12.5*	8.5	12	9.9	8.1	11	8	9.9	8.1	8.1	10	12	10
Ignitability	NS	NS	NS	> 140 °F**	NEG	NEG	NEG	NEG	NEG	NEG	NEG	NEG	NEG	NEG	NEG	NEG
Paint Filter Liquid	NS	NS	NS	NS	NEG	NEG	NEG	NEG	NEG	NEG	NEG	NEG	NEG	NEG	NEG	NEG
Barium	350	400	400	NS	0.29	0.41	0.36	0.25 U	0.39	0.31	0.31	0.3	0.3	0.4	0.46	0.37
Lead	63	1,000	400	5	ND	ND	ND	ND	0.17	ND	ND	ND	ND	ND	0.071	ND

Analyte	Unrestricted Use (Track 1) Soil Cleanup Objectives (SCOs)	Commercial Use (Track 2) Soil Cleanup Objectives (SCOs)	Restricted Residential Use (Track 2) Soil Cleanup Objectives (SCOs)	Resource Conservation and Recovery Act (RCRA) Hazardous Waste Levels (mg/L)	Sample ID, Date Collected, and Depth								
					SB27	SB28	SB29	SB30	SB31	SB33	SB34	SB35	SB36
					12/4/2015	12/4/2015	12/4/2015	12/4/2015	12/4/2015	12/4/2015	12/4/2015	12/4/2015	12/4/2015
					7.0 - 7.5	18.5 - 19.0	13.5 - 14.0	8.5 - 9.0	8.5 - 9.0	8.0 - 8.5	8.0 - 8.5	8.0 - 8.5	7.5 - 8.0
RCRA (including TCLP metals)													
pH	NS	NS	NS	≥ 2 and ≤ 12.5*	8.5	12	9.9	8.1	11	8	9.9	8.1	8.1
Ignitability	NS	NS	NS	> 140 °F**	NEG	NEG	NEG	NEG	NEG	NEG	NEG	NEG	NEG
Paint Filter Liquid	NS	NS	NS	NS	NEG	NEG	NEG	NEG	NEG	NEG	NEG	NEG	NEG
Barium	350	400	400	NS	0.29	0.41	0.36	ND	0.39	0.31	0.31	0.3	0.3
Lead	63	1,000	400	5	ND	ND	ND	ND	0.17	ND	ND	ND	ND

Notes:
All concentrations are in parts per million (ppm) or milligrams per kilogram (mg/kg) unless otherwise noted.
TCLP = Toxicity characteristic leaching procedure
ND = Compound not detected above method detection limit (see attached lab report for mdl's)
*A solid waste exhibits the characteristic of corrosivity if it has a pH less than or equal to 2 or greater than or equal to 12.5.
**A solid waste exhibits the characteristic of ignitability if it has flash point less than 60 °C (140 °F)
°F = Degrees Fahrenheit
NEG = Negative (flash point was not detected below 140 degrees Fahrenheit)
NS = No Standard
SCOs = Soil Cleanup Objectives as per the NYSDEC Regulations 6 NYCRR Subpart 375-6 Remedial Program Soil Cleanup Objectives (December 14, 2006)

HAZ - 56

Table 4. Groundwater Quality Compared to New York City Department of Environmental Protection Limitations for Effluent to Sanitary or Combined Sewers
Phase II Subsurface Corridor Investigation for Rehabilitation of Astoria Trunk Water Main
Queens, New York

Parameter[1]	NYC DEP Limitations to Sanitary or Combined Sewers		Sample ID and Date Collected		Sample ID and Date Collected	
			OW-7		OW-28	
			12/3/2015		12/3/2015	
Non-Polar Material[2]	50	mg/L	ND	mg/L	ND	mg/L
Flash Point - Liquid/Solid	> 140	°F	**> 141**	°F	**> 141**	°F
pH	5 - 12		**7.8**		**7.5**	
Cadmium (Instantaneous or Composite)	2 or 0.69	mg/L	ND	mg/L	ND	mg/L
Chromium Hexavalent (VI)	5	mg/L	ND	mg/L	ND	mg/L
Copper	5	mg/L	ND	mg/L	ND	mg/L
Lead	2	mg/L	ND	mg/L	ND	mg/L
Mercury	0.05	mg/L	ND	mg/L	ND	mg/L
Nickel	3	mg/L	ND	mg/L	ND	mg/L
Zinc	5	mg/L	ND	mg/L	ND	mg/L
Benzene	134	ug/L	ND	ug/L	ND	ug/L
Carbontetrachloride	NS	ug/L	ND	ug/L	ND	ug/L
Chloroform	NS	ug/L	ND	ug/L	ND	ug/L
1,4 Dichlorobenzene	NS	ug/L	ND	ug/L	ND	ug/L
Ethylbenzene	380	ug/L	ND	ug/L	ND	ug/L
MTBE (Methyl-Tert-Butyl-Ether)	50	ug/L	ND	ug/L	ND	ug/L
Naphthalene	47	ug/L	ND	ug/L	ND	ug/L
Phenol	NS	ug/L	ND	ug/L	ND	ug/L
Tetrachloroethene	20	ug/L	**10**	ug/L	ND	ug/L
Toluene	74	ug/L	ND	ug/L	ND	ug/L
1,2,4 Trichlorobenzene	NS	ug/L	ND	ug/L	ND	ug/L
1,1,1 Trichloroethane	NS	ug/L	ND	ug/L	ND	ug/L
Xylenes (Total)	74	ug/L	ND	ug/L	ND	ug/L
PCBs (Total)[3]	1	ug/L	ND	ug/L	ND	ug/L
Total Suspended Solids	350	mg/L	**12**	mg/L		mg/L
CBOD[4]	NS	mg/L	ND	mg/L	ND	mg/L
Chloride[4]	NS	mg/L	**360**	mg/L	**360**	mg/L
Total Nitrogen[4]	NS	mg/L	**12**	mg/L	**24**	mg/L
Total Solids[5]	NS	mg/L	**1,200**	mg/L	**2,200**	mg/L

Notes:
All concentrations are reported in parts per million, milligrams per liter (ppm or mg/L), parts per billion or micrograms per liter (ppb or ug/L)
N/A = Compound or sample characteristic not analyzed
NS = No Standard
ND = Compound not detected above method detection limit (see attached lab report for mdl's)
Bold = Positive detection

[1] All handling and preservation of collected samples and laboratory analyses of samples was performed in accordance with 40 CFR Part 136.
[2] Analysis for non-polar materials was performed by EPA method 1664.
[3] Analysis for polychlorinated biphenyls (PCBs) was performed according to EPA method 608 with method detection limit =<65 parts per trillion
Analysis for PCBs is required if discharge =>10,000 gallons per day (gpd) and duration of discharge > 10 days.
[4] Analysis for Carbonaceous Biochemical Oxygen Demand (CBOD), Chloride, Total Solids, and Total Nitrogen are required if proposed discharge >= 10,000 gpd
[5] For discharge >= 10,000 gpd, the total suspended solids (TSS) limit is 350 mg/l. For discharge < 10,000 gpd, the limit is determined on a case by case basis

HAZ-57

FIGURE 1 – TOPOGRAPHIC CORRIDOR LOCATION MAP

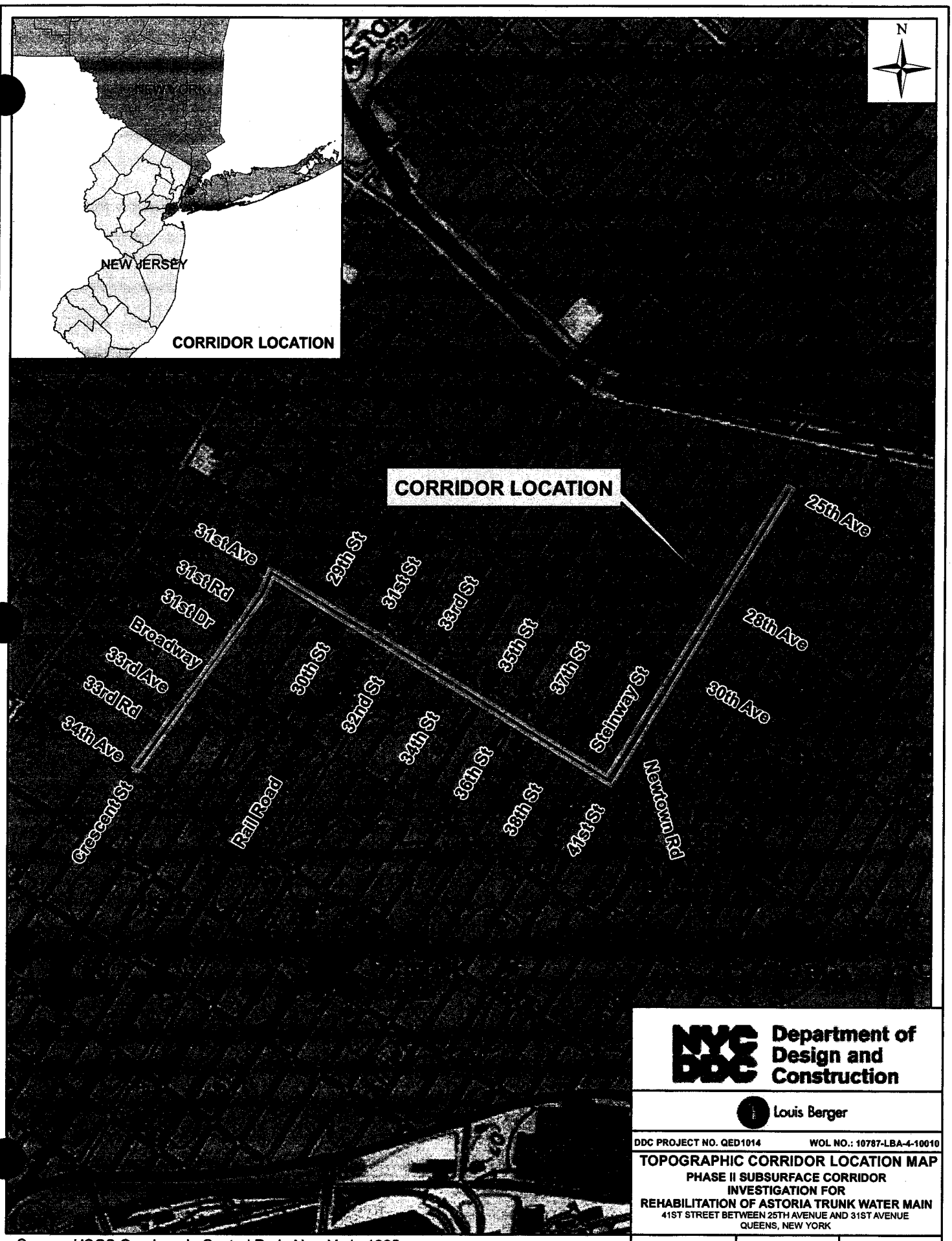

Source: USGS Quadrangle Central Park, New York, 1995

Department of Design and Construction

Louis Berger

DDC PROJECT NO. QED1014 WOL NO.: 10787-LBA-4-10010

TOPOGRAPHIC CORRIDOR LOCATION MAP
PHASE II SUBSURFACE CORRIDOR INVESTIGATION FOR REHABILITATION OF ASTORIA TRUNK WATER MAIN
41ST STREET BETWEEN 25TH AVENUE AND 31ST AVENUE
QUEENS, NEW YORK

SCALE: 1" = 1000'	DATE: 12/15/2015	FIGURE: 1

HAZ-59

FIGURE 2 –BORING LOCATION PLAN

HAZ-61

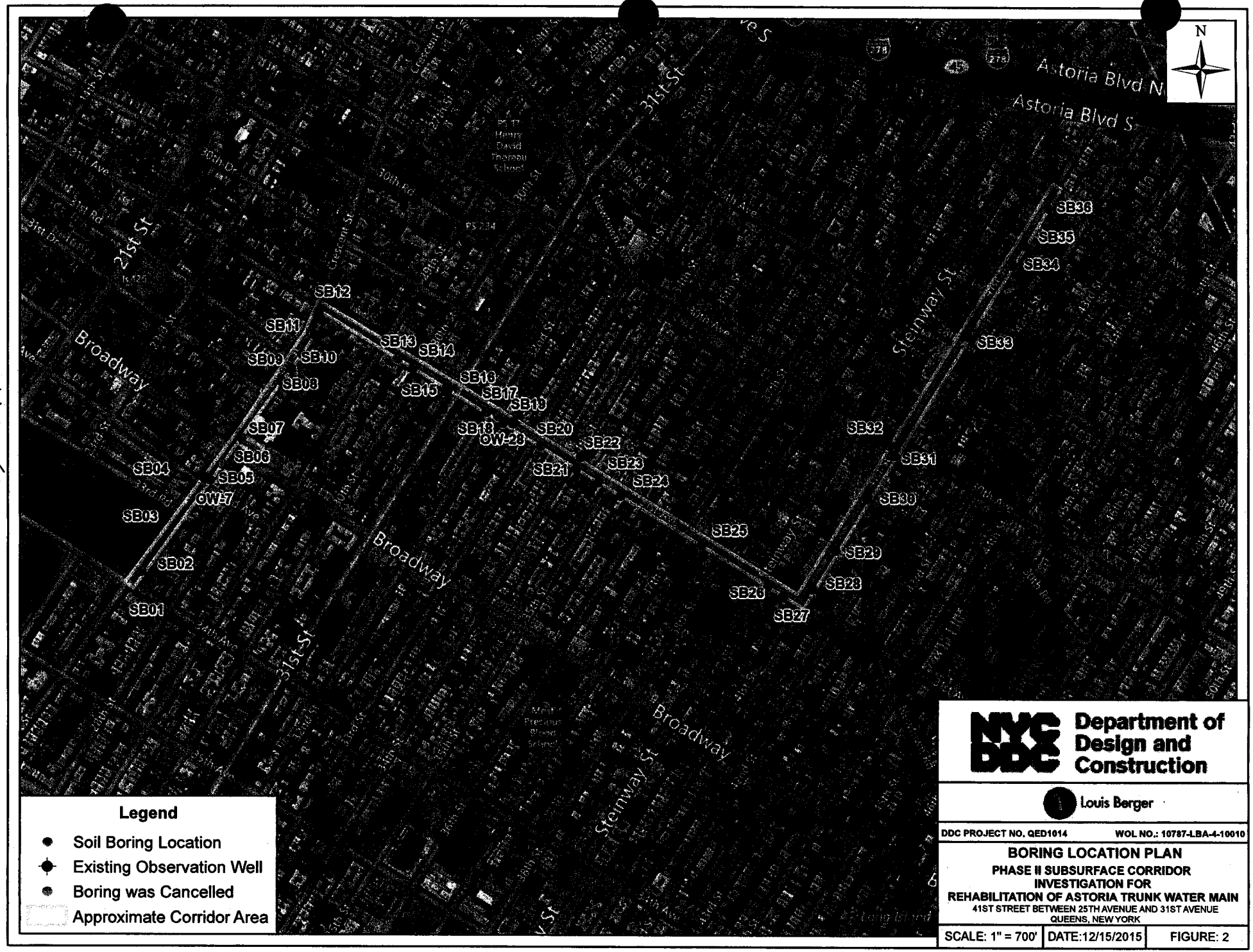

Department of Design and Construction

Louis Berger

DDC PROJECT NO. QED1014 WOL NO.: 10787-LBA-4-10010

BORING LOCATION PLAN

PHASE II SUBSURFACE CORRIDOR INVESTIGATION FOR REHABILITATION OF ASTORIA TRUNK WATER MAIN

41ST STREET BETWEEN 25TH AVENUE AND 31ST AVENUE
QUEENS, NEW YORK

SCALE: 1" = 700'	DATE:12/15/2015	FIGURE: 2

ATTACHMENT A
BORING LOCATION PLAN

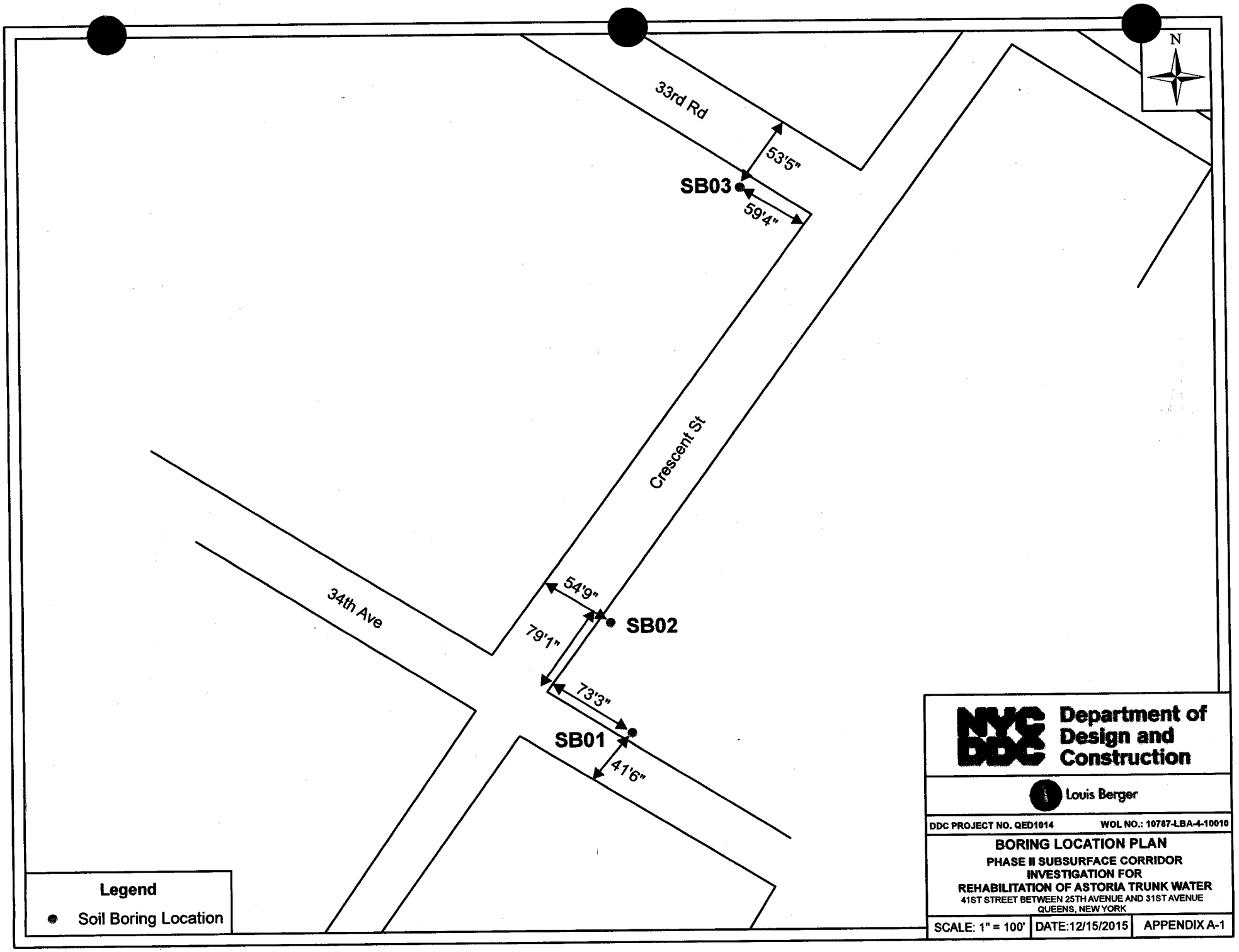
N
33rd Rd
53'5"
SB03
59'4"
Crescent St
34th Ave
54'9"
SB02
79'1"
73'3"
SB01
41'6"
Legend
Soil Boring Location
Department of Design and Construction
Louis Berger
DDC PROJECT NO. QED1014
WOL NO.: 10787-LBA-4-10010
BORING LOCATION PLAN
PHASE II SUBSURFACE CORRIDOR INVESTIGATION FOR
REHABILITATION OF ASTORIA TRUNK WATER
41ST STREET BETWEEN 25TH AVENUE AND 31ST AVENUE
QUEENS, NEW YORK
SCALE: 1" = 100'
DATE:12/15/2015
APPENDIX A-1

LA2-63

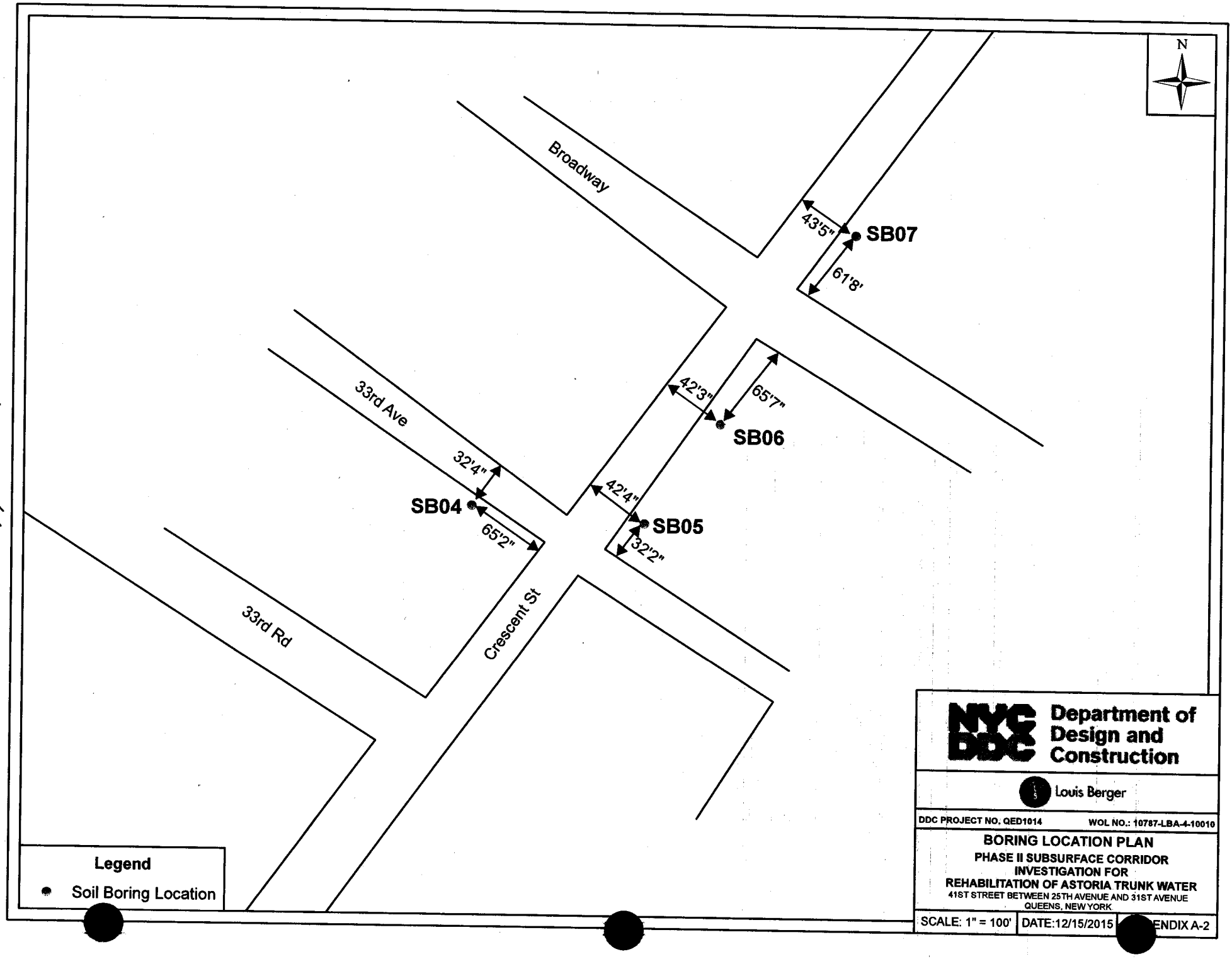
N
Broadway
33rd Ave
33rd Rd
Crescent St
SB07
43'5"
61'8'
SB06
42'3"
65'7"
SB05
42'4"
32'2"
SB04
32'4"
65'2"
Legend
Soil Boring Location
Department of Design and Construction
Louis Berger
DDC PROJECT NO. QED1014
WOL NO.: 10787-LBA-4-10010
BORING LOCATION PLAN
PHASE II SUBSURFACE CORRIDOR INVESTIGATION FOR REHABILITATION OF ASTORIA TRUNK WATER
41ST STREET BETWEEN 25TH AVENUE AND 31ST AVENUE
QUEENS, NEW YORK
SCALE: 1" = 100'
DATE:12/15/2015
ENDIX A-2

HA2-64

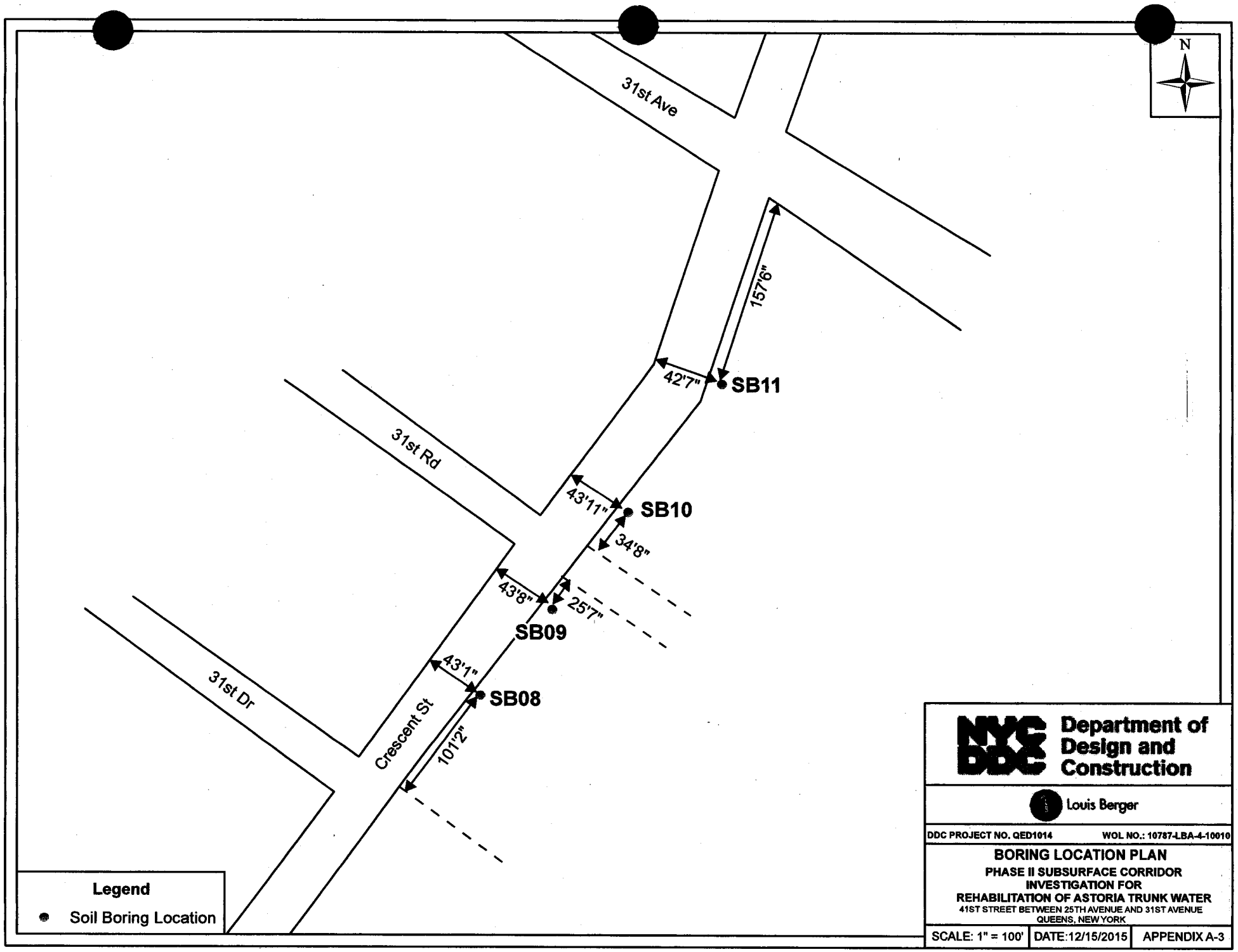
N
31st Ave
31st Rd
31st Dr
Crescent St
157'6"
42'7"
SB11
43'11"
SB10
34'8"
43'8"
25'7"
SB09
43'1"
SB08
101'2"
Legend
Soil Boring Location
Department of Design and Construction
Louis Berger
DDC PROJECT NO. QED1014
WOL NO.: 10787-LBA-4-10010
BORING LOCATION PLAN
PHASE II SUBSURFACE CORRIDOR INVESTIGATION FOR REHABILITATION OF ASTORIA TRUNK WATER
41ST STREET BETWEEN 25TH AVENUE AND 31ST AVENUE
QUEENS, NEW YORK
SCALE: 1" = 100'
DATE:12/15/2015
APPENDIX A-3

HA2-ハ

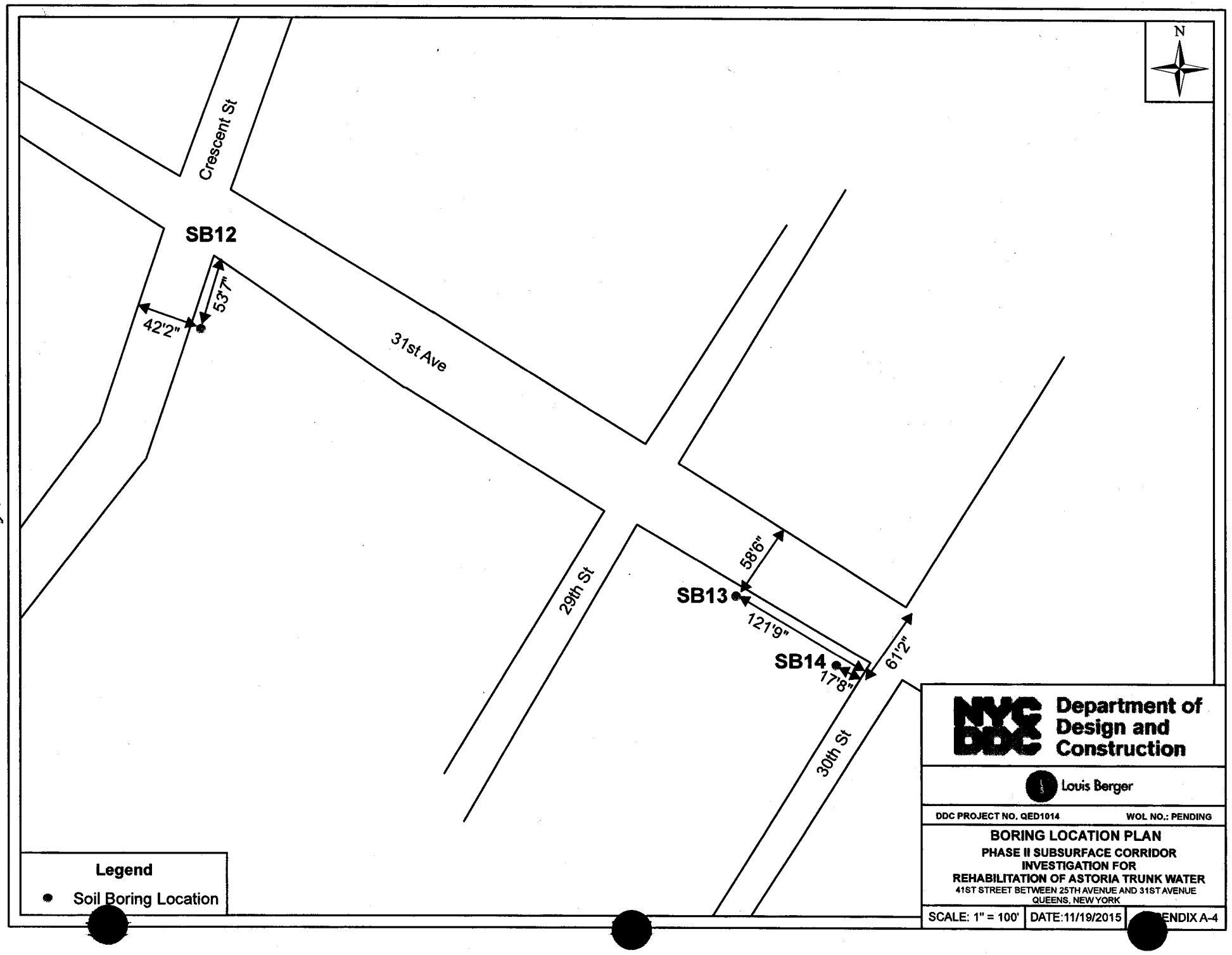
N
Crescent St
SB12
53'7"
42'2"
31st Ave
29th St
58'6"
SB13
121'9"
SB14
17'8"
61'2"
30th St
Legend
Soil Boring Location
Department of Design and Construction
Louis Berger
DDC PROJECT NO. QED1014
WOL NO.: PENDING
BORING LOCATION PLAN
PHASE II SUBSURFACE CORRIDOR INVESTIGATION FOR REHABILITATION OF ASTORIA TRUNK WATER
41ST STREET BETWEEN 25TH AVENUE AND 31ST AVENUE
QUEENS, NEW YORK
SCALE: 1" = 100'
DATE:11/19/2015
ENDIX A-4

HAZ-66

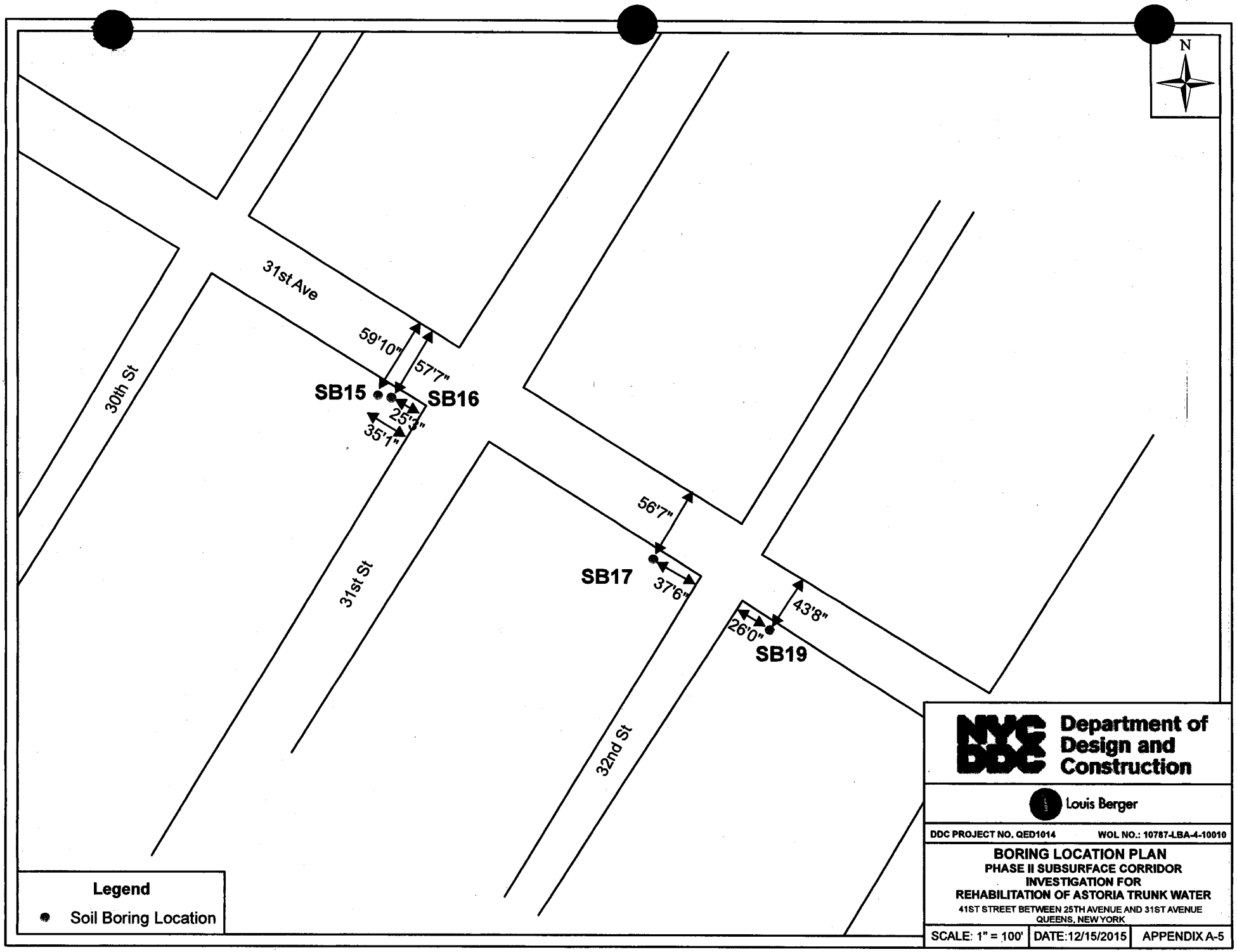
N
31st Ave
30th St
31st St
32nd St
59'10"
57'7"
SB15
SB16
25'3"
35'1"
56'7"
SB17
37'6"
43'8"
26'0"
SB19
Legend
Soil Boring Location
Department of Design and Construction
Louis Berger
DDC PROJECT NO. QED1014
WOL NO.: 10787-LBA-4-10010
BORING LOCATION PLAN
PHASE II SUBSURFACE CORRIDOR INVESTIGATION FOR REHABILITATION OF ASTORIA TRUNK WATER
41ST STREET BETWEEN 25TH AVENUE AND 31ST AVENUE
QUEENS, NEW YORK
SCALE: 1" = 100'
DATE:12/15/2015
APPENDIX A-5

LA7 - 67

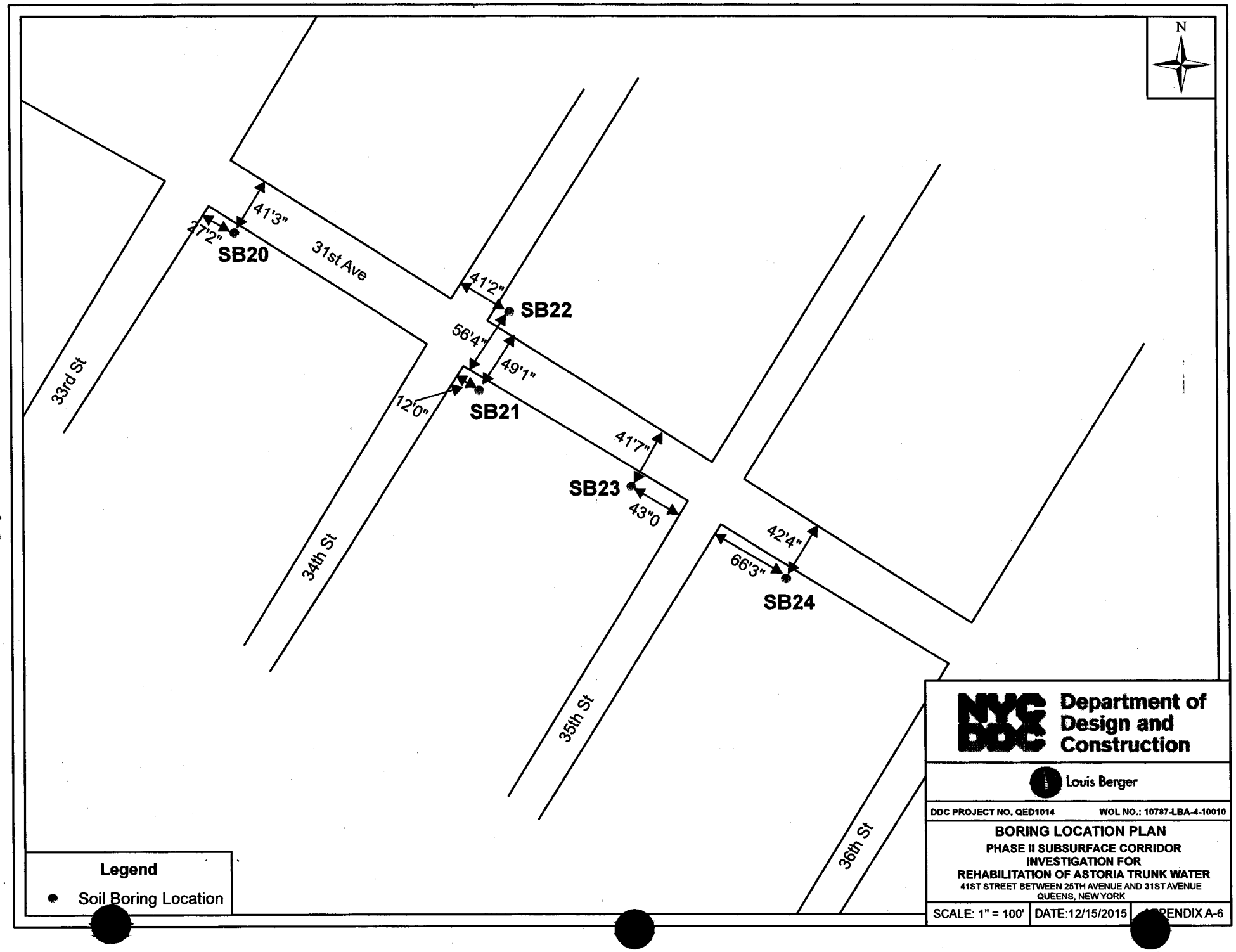
N
41'3"
47'2"
SB20
31st Ave
41'2"
SB22
56'4"
49'1"
12'0"
SB21
33rd St
41'7"
SB23
43"0
34th St
42'4"
66'3"
SB24
35th St
36th St
Legend
Soil Boring Location
Department of Design and Construction
Louis Berger
DDC PROJECT NO. QED1014
WOL NO.: 10787-LBA-4-10010
BORING LOCATION PLAN
PHASE II SUBSURFACE CORRIDOR INVESTIGATION FOR REHABILITATION OF ASTORIA TRUNK WATER
41ST STREET BETWEEN 25TH AVENUE AND 31ST AVENUE
QUEENS, NEW YORK
SCALE: 1" = 100'
DATE:12/15/2015
APPENDIX A-6

HAZ-68

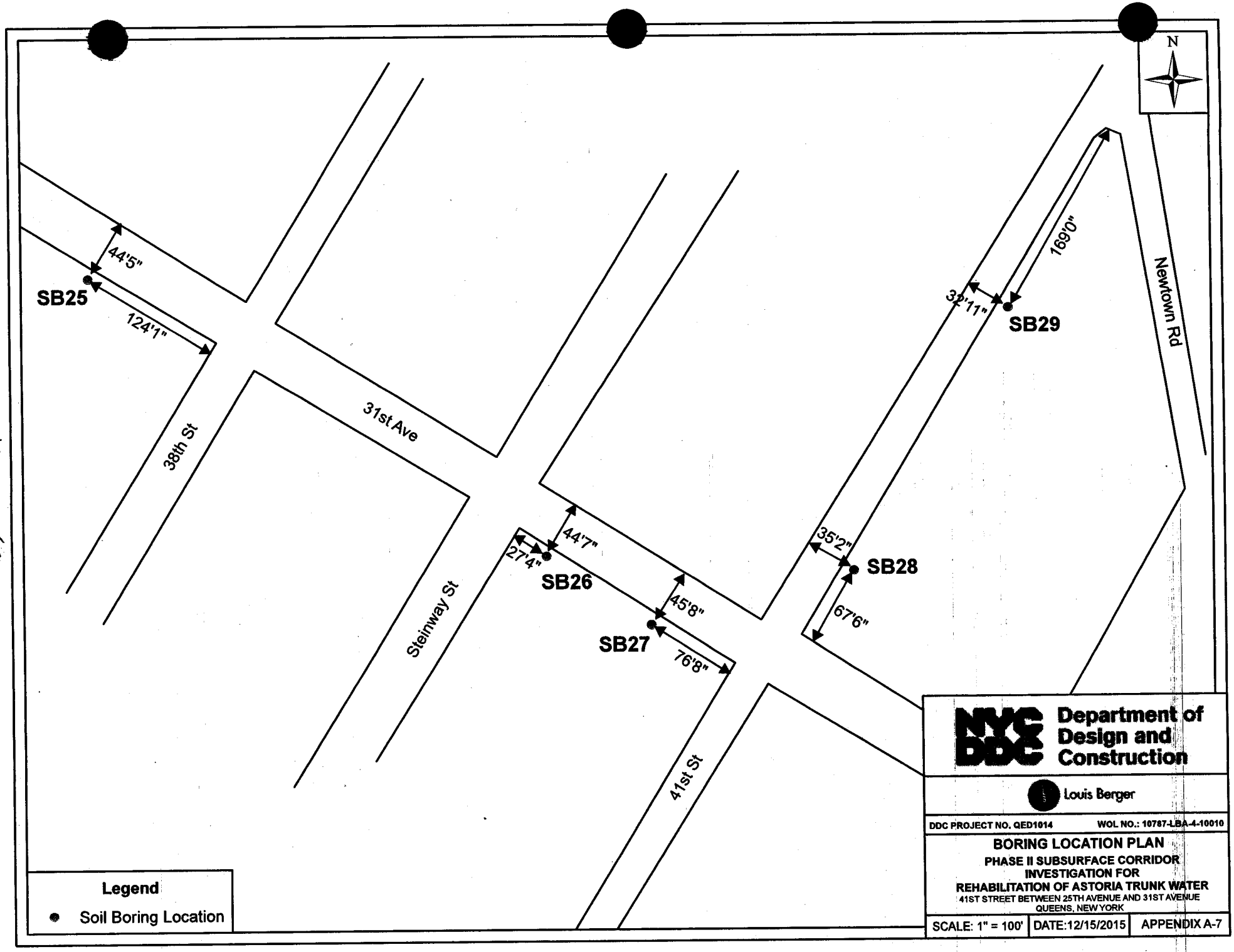
N
SB25
44'5"
124'1"
38th St
31st Ave
Steinway St
SB26
27'4"
44'7"
SB27
45'8"
76'8"
41st St
SB28
35'2"
67'6"
SB29
32'11"
169'0"
Newtown Rd
Legend
Soil Boring Location
Department of Design and Construction
Louis Berger
DDC PROJECT NO. QED1014
WOL NO.: 10787-LBA-4-10010
BORING LOCATION PLAN
PHASE II SUBSURFACE CORRIDOR INVESTIGATION FOR
REHABILITATION OF ASTORIA TRUNK WATER
41ST STREET BETWEEN 25TH AVENUE AND 31ST AVENUE
QUEENS, NEW YORK
SCALE: 1" = 100'
DATE:12/15/2015
APPENDIX A-7

HA2-69

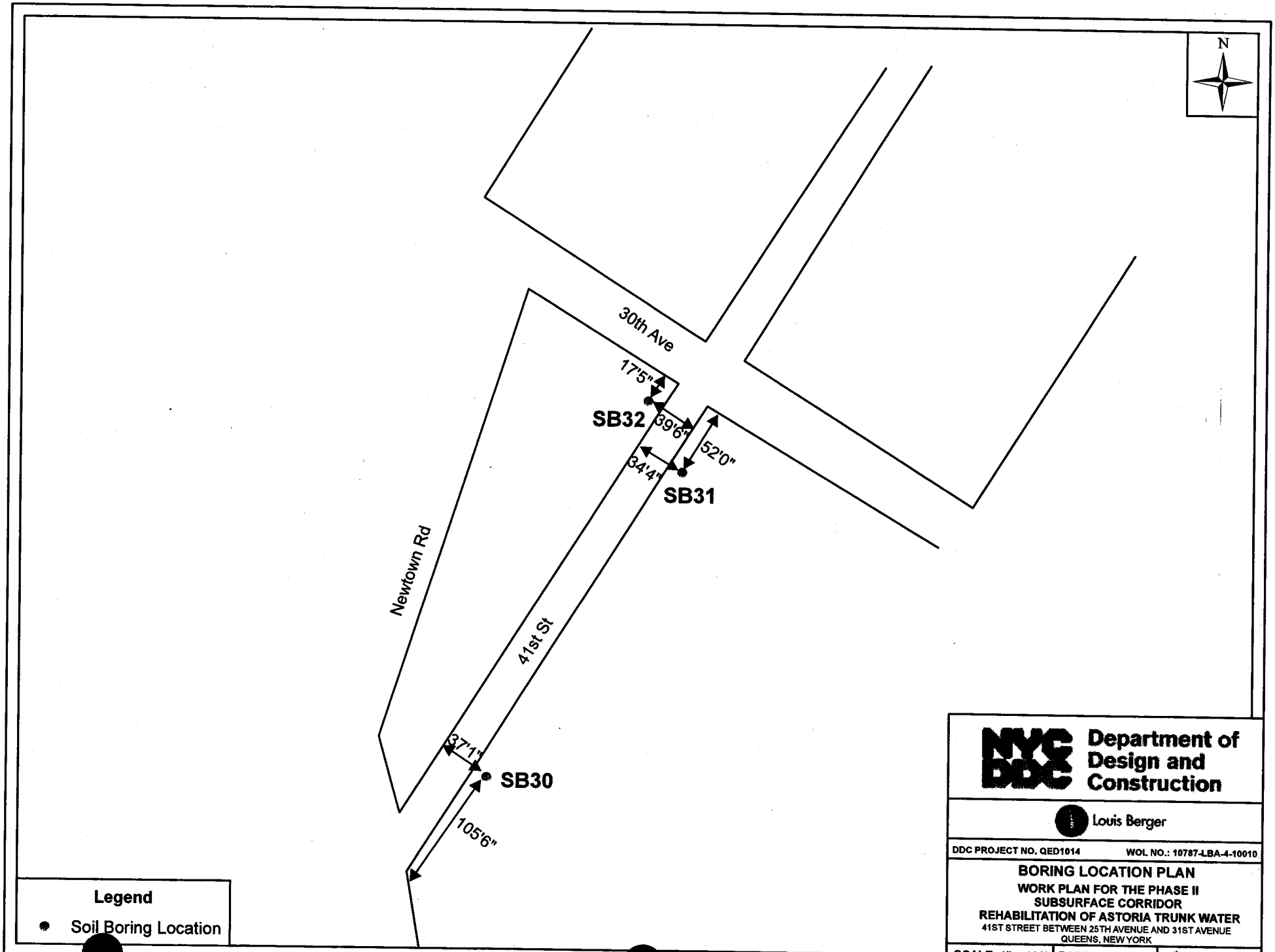

Department of Design and Construction

Louis Berger

DDC PROJECT NO. QED1014 WOL NO.: 10787-LBA-4-10010

BORING LOCATION PLAN

WORK PLAN FOR THE PHASE II SUBSURFACE CORRIDOR REHABILITATION OF ASTORIA TRUNK WATER

41ST STREET BETWEEN 25TH AVENUE AND 31ST AVENUE
QUEENS, NEW YORK

SCALE: 1" = 100' | DATE:12/15/2015 | APPENDIX A-8

HA2-70

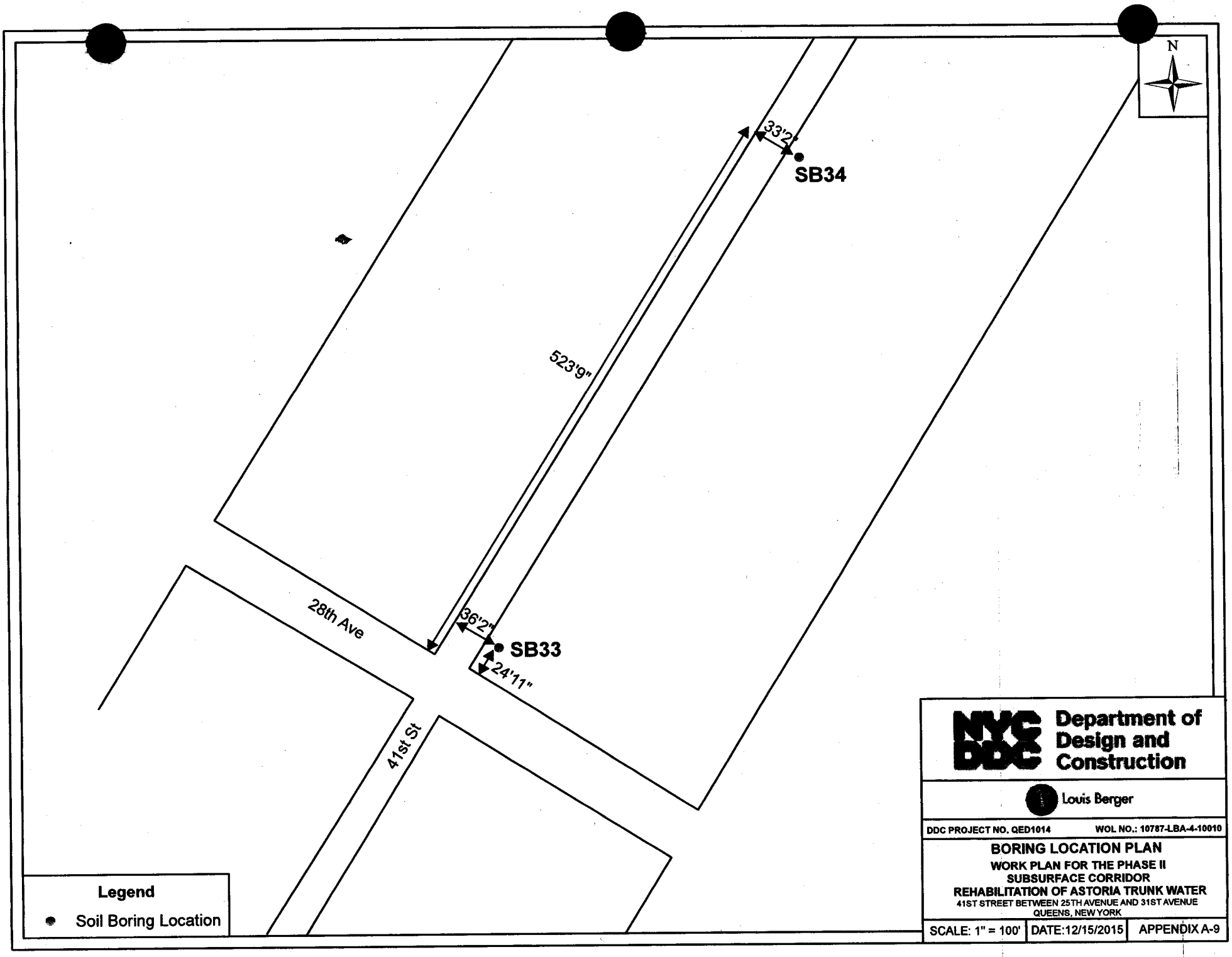
N
33'2"
SB34
523'9"
36'2"
SB33
24'11"
28th Ave
41st St
Legend
Soil Boring Location
Department of Design and Construction
Louis Berger
DDC PROJECT NO. QED1014
WOL NO.: 10787-LBA-4-10010
BORING LOCATION PLAN
WORK PLAN FOR THE PHASE II
SUBSURFACE CORRIDOR
REHABILITATION OF ASTORIA TRUNK WATER
41ST STREET BETWEEN 25TH AVENUE AND 31ST AVENUE
QUEENS, NEW YORK
SCALE: 1" = 100'
DATE:12/15/2015
APPENDIX A-9

HA2-71

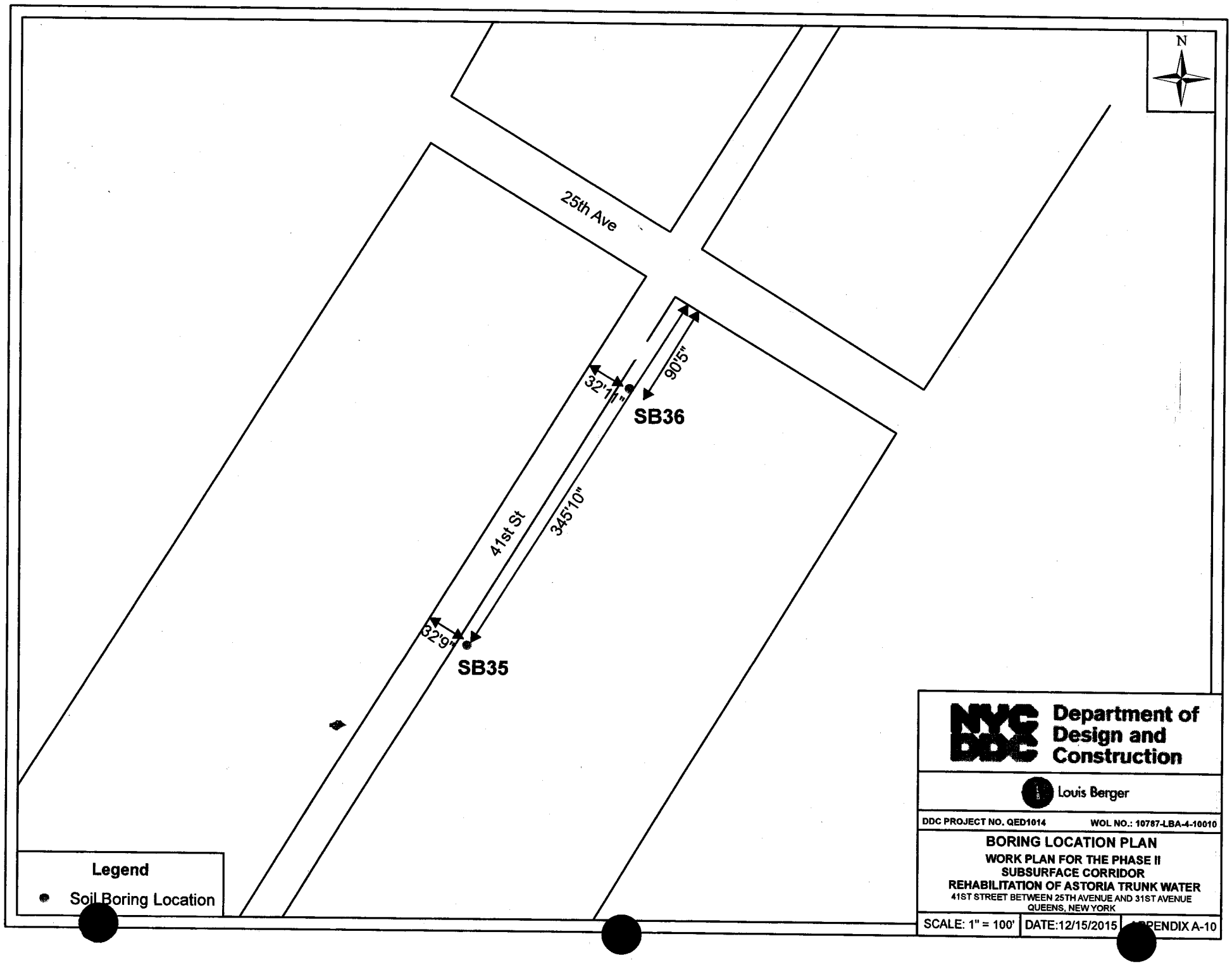
N
25th Ave
41st St
32'1"
90'5"
SB36
345'10"
32'9"
SB35
Legend
Soil Boring Location
Department of Design and Construction
Louis Berger
DDC PROJECT NO. QED1014
WOL NO.: 10787-LBA-4-10010
BORING LOCATION PLAN
WORK PLAN FOR THE PHASE II
SUBSURFACE CORRIDOR
REHABILITATION OF ASTORIA TRUNK WATER
41ST STREET BETWEEN 25TH AVENUE AND 31ST AVENUE
QUEENS, NEW YORK
SCALE: 1" = 100'
DATE:12/15/2015
APPENDIX A-10

HA2-72

ATTACHMENT B
LABORATORY ANALYTICAL RESULTS

Hampton-Clarke Report Of Analysis

Client: Louis Berger & Associates
Project: Astoria Trunk Ph II

HC Project #: 5120327

Sample ID: SB03
Lab#: AC88558-001
Matrix: Soil

Collection Date: 12/2/2015
Receipt Date: 12/3/2015

% Solids SM2540G

Analyte	DF	Units	RL	Result
% Solids	1	percent		86

Gasoline range organics 8015(C6-C10)

Analyte	DF	Units	RL	Result
Gasoline Range Organics	87.4	mg/kg	25	ND

Surrogate	Conc.	Spike	Low Limit	High Limit	Recovery	Flags
1,4-Dichlorobenzene-d4	21.34	30	50	150	71	

Ignitability

Analyte	DF	Units	RL	Result
Burning Rate (mm/sec)	1			NA
Flame Propagation (POS/NEG)	1			NA
Ignitability Screen (POS/NEG)	1			NEG

Mercury (TCLP) 7470A

Analyte	DF	Units	RL	Result
Mercury	1	mg/l	0.00070	ND

PAH Compounds 8270

Analyte	DF	Units	RL	Result
2-Methylnaphthalene	1	mg/kg	0.039	ND
Acenaphthene	1	mg/kg	0.039	ND
Acenaphthylene	1	mg/kg	0.039	ND
Anthracene	1	mg/kg	0.039	ND
Benzo[a]anthracene	**1**	**mg/kg**	**0.039**	**0.061**
Benzo[a]pyrene	**1**	**mg/kg**	**0.039**	**0.054**
Benzo[b]fluoranthene	**1**	**mg/kg**	**0.039**	**0.088**
Benzo[g,h,i]perylene	**1**	**mg/kg**	**0.039**	**0.048**
Benzo[k]fluoranthene	1	mg/kg	0.039	ND
Chrysene	**1**	**mg/kg**	**0.039**	**0.058**
Dibenzo[a,h]anthracene	1	mg/kg	0.039	ND
Fluoranthene	**1**	**mg/kg**	**0.039**	**0.084**
Fluorene	1	mg/kg	0.039	ND
Indeno[1,2,3-cd]pyrene	**1**	**mg/kg**	**0.039**	**0.043**
Naphthalene	1	mg/kg	0.0097	ND
Phenanthrene	1	mg/kg	0.039	ND
Pyrene	**1**	**mg/kg**	**0.039**	**0.099**

Surrogate	Conc.	Spike	Low Limit	High Limit	Recovery	Flags
Terphenyl-d14	54.42	50	30	130	109	
Phenol-d5	62.34	100	30	130	62	
Nitrobenzene-d5	33.63	50	30	130	67	
2-Fluorophenol	62.22	100	30	130	62	
2-Fluorobiphenyl	36.38	50	30	130	73	
2,4,6-Tribromophenol	94.02	100	30	130	94	

Paint Filter Test 9095A

Analyte	DF	Units	RL	Result
Paint Filter Test	1			NEG

PCB 8082

Analyte	DF	Units	RL	Result
Aroclor (Total)	1	mg/kg	0.029	ND
Aroclor-1016	1	mg/kg	0.029	ND
Aroclor-1221	1	mg/kg	0.029	ND
Aroclor-1232	1	mg/kg	0.029	ND
Aroclor-1242	1	mg/kg	0.029	ND

NOTE: Soil Results are reported to Dry Weight

Sample ID: SB03
Lab#: AC88558-001
Matrix: Soil

Collection Date: 12/2/2015
Receipt Date: 12/3/2015

Aroclor-1248	1	mg/kg	0.029	ND
Aroclor-1254	1	mg/kg	0.029	ND
Aroclor-1260	1	mg/kg	0.029	ND
Aroclor-1262	1	mg/kg	0.029	ND
Aroclor-1268	1	mg/kg	0.029	ND

Surrogate	Conc.	Spike	Low Limit	High Limit	Recovery	Flags
TCMX-Surrogate	103.70	100	30	150	104	
TCMX-Surrogate	90.29	100	30	150	90	
DCB-Surrogate	94.81	100	30	150	95	
DCB-Surrogate	76.27	100	30	150	76	

pH 9040C/9045D

Analyte	DF	Units	RL	Result
pH	1	ph		7.4

Reactive Cyanide

Analyte	DF	Units	RL	Result
Cyanide (Reactive)	1	mg/kg	0.50	ND

Reactive Sulfide

Analyte	DF	Units	RL	Result
Sulfide (Reactive)	1	mg/kg	100	ND

TCLP Metals 6010

Analyte	DF	Units	RL	Result
Arsenic	1	mg/l	0.10	ND
Barium	**1**	**mg/l**	**0.25**	**0.31**
Cadmium	1	mg/l	0.050	ND
Chromium	1	mg/l	0.10	ND
Lead	1	mg/l	0.050	ND
Nickel	1	mg/l	0.10	ND
Selenium	1	mg/l	0.10	ND
Silver	1	mg/l	0.050	ND

Total PetroleumHydrocarbons8015B(C8-C40)

Analyte	DF	Units	RL	Result
Total Petroleum Hydrocarbons	1	mg/kg	70	ND

Volatile Organics (no search) 8260

Analyte	DF	Units	RL	Result
1,1,1-Trichloroethane	0.846	mg/kg	0.0020	ND
1,1,2,2-Tetrachloroethane	0.846	mg/kg	0.0020	ND
1,1,2-Trichloro-1,2,2-trifluoroethane	0.846	mg/kg	0.0020	ND
1,1,2-Trichloroethane	0.846	mg/kg	0.0020	ND
1,1-Dichloroethane	0.846	mg/kg	0.0020	ND
1,1-Dichloroethene	0.846	mg/kg	0.0020	ND
1,2,3-Trichlorobenzene	0.846	mg/kg	0.0020	ND
1,2,4-Trichlorobenzene	0.846	mg/kg	0.0020	ND
1,2-Dibromo-3-chloropropane	0.846	mg/kg	0.0020	ND
1,2-Dibromoethane	0.846	mg/kg	0.0020	ND
1,2-Dichlorobenzene	0.846	mg/kg	0.0020	ND
1,2-Dichloroethane	0.846	mg/kg	0.00098	ND
1,2-Dichloropropane	0.846	mg/kg	0.0020	ND
1,3-Dichlorobenzene	0.846	mg/kg	0.0020	ND
1,4-Dichlorobenzene	0.846	mg/kg	0.0020	ND
1,4-Dioxane	0.846	mg/kg	0.098	ND
2-Butanone	0.846	mg/kg	0.0020	ND
2-Hexanone	0.846	mg/kg	0.0020	ND
4-Methyl-2-pentanone	0.846	mg/kg	0.0020	ND
Acetone	0.846	mg/kg	0.0098	ND
Benzene	0.846	mg/kg	0.00098	ND
Bromochloromethane	0.846	mg/kg	0.0020	ND
Bromodichloromethane	0.846	mg/kg	0.0020	ND
Bromoform	0.846	mg/kg	0.0020	ND
Bromomethane	0.846	mg/kg	0.0020	ND
Carbon disulfide	0.846	mg/kg	0.0020	ND
Carbon tetrachloride	0.846	mg/kg	0.0020	ND

Sample ID: SB03
Lab#: AC88558-001
Matrix: Soil

Collection Date: 12/2/2015
Receipt Date: 12/3/2015

Chlorobenzene	0.846	mg/kg	0.0020	ND
Chloroethane	0.846	mg/kg	0.0020	ND
Chloroform	0.846	mg/kg	0.0020	ND
Chloromethane	0.846	mg/kg	0.0020	ND
cis-1,2-Dichloroethene	0.846	mg/kg	0.0020	ND
cis-1,3-Dichloropropene	0.846	mg/kg	0.0020	ND
Cyclohexane	0.846	mg/kg	0.0020	ND
Dibromochloromethane	0.846	mg/kg	0.0020	ND
Dichlorodifluoromethane	0.846	mg/kg	0.0020	ND
Ethylbenzene	0.846	mg/kg	0.00098	ND
Isopropylbenzene	0.846	mg/kg	0.00098	ND
m&p-Xylenes	0.846	mg/kg	0.00098	ND
Methyl Acetate	0.846	mg/kg	0.0020	ND
Methylcyclohexane	0.846	mg/kg	0.0020	ND
Methylene chloride	0.846	mg/kg	0.0020	ND
Methyl-t-butyl ether	0.846	mg/kg	0.00098	ND
o-Xylene	0.846	mg/kg	0.00098	ND
Styrene	0.846	mg/kg	0.0020	ND
Tetrachloroethene	0.846	mg/kg	0.0020	ND
Toluene	0.846	mg/kg	0.00098	ND
trans-1,2-Dichloroethene	0.846	mg/kg	0.0020	ND
trans-1,3-Dichloropropene	0.846	mg/kg	0.0020	ND
Trichloroethene	0.846	mg/kg	0.0020	ND
Trichlorofluoromethane	0.846	mg/kg	0.0020	ND
Vinyl chloride	0.846	mg/kg	0.0020	ND
Xylenes (Total)	0.846	mg/kg	0.00098	ND

Surrogate	Conc.	Spike	Low Limit	High Limit	Recovery	Flags
Toluene-d8	31.09	30	70	130	104	
Dibromofluoromethane	30.57	30	70	130	102	
Bromofluorobenzene	29.67	30	70	130	99	
1,2-Dichloroethane-d4	29.72	30	70	130	99	

NOTE: Soil Results are reported to Dry Weight

Sample ID: SB04
Lab#: AC88558-002
Matrix: Soil

Collection Date: 12/2/2015
Receipt Date: 12/3/2015

% Solids SM2540G

Analyte	DF	Units	RL	Result
%Solids	1	percent		93

Gasoline range organics 8015(C6-C10)

Analyte	DF	Units	RL	Result
Gasoline Range Organics	90.9	mg/kg	24	ND

Surrogate	Conc.	Spike	Low Limit	High Limit	Recovery	Flags
1,4-Dichlorobenzene-d4	19.39	30	50	150	65	

Ignitability (EPA 1030)

Analyte	DF	Units	RL	Result
Burning Rate (mm/sec)	1			NA
Flame Propagation (POS/NEG)	1			NA
Ignitability Screen (POS/NEG)	1			NEG

Mercury (TCLP) 7470A

Analyte	DF	Units	RL	Result
Mercury	1	mg/l	0.00070	ND

PAH Compounds 8270

Analyte	DF	Units	RL	Result
2-Methylnaphthalene	1	mg/kg	0.036	ND
Acenaphthene	1	mg/kg	0.036	ND
Acenaphthylene	1	mg/kg	0.036	ND
Anthracene	1	mg/kg	0.036	ND
Benzo[a]anthracene	**1**	**mg/kg**	**0.036**	**0.044**
Benzo[a]pyrene	1	mg/kg	0.036	ND
Benzo[b]fluoranthene	**1**	**mg/kg**	**0.036**	**0.045**
Benzo[g,h,i]perylene	1	mg/kg	0.036	ND
Benzo[k]fluoranthene	1	mg/kg	0.036	ND
Chrysene	**1**	**mg/kg**	**0.036**	**0.043**
Dibenzo[a,h]anthracene	1	mg/kg	0.036	ND
Fluoranthene	**1**	**mg/kg**	**0.036**	**0.074**
Fluorene	1	mg/kg	0.036	ND
Indeno[1,2,3-cd]pyrene	1	mg/kg	0.036	ND
Naphthalene	1	mg/kg	0.0090	ND
Phenanthrene	**1**	**mg/kg**	**0.036**	**0.074**
Pyrene	**1**	**mg/kg**	**0.036**	**0.11**

Surrogate	Conc.	Spike	Low Limit	High Limit	Recovery	Flags
Terphenyl-d14	63.13	50	30	130	126	
Phenol-d5	70.11	100	30	130	70	
Nitrobenzene-d5	35.99	50	30	130	72	
2-Fluorophenol	63.38	100	30	130	63	
2-Fluorobiphenyl	42.32	50	30	130	85	
2,4,6-Tribromophenol	111.47	100	30	130	111	

Paint Filter Test 9095A

Analyte	DF	Units	RL	Result
Paint Filter Test	1			NEG

PCB 8082

Analyte	DF	Units	RL	Result
Aroclor (Total)	1	mg/kg	0.027	ND
Aroclor-1016	1	mg/kg	0.027	ND
Aroclor-1221	1	mg/kg	0.027	ND
Aroclor-1232	1	mg/kg	0.027	ND
Aroclor-1242	1	mg/kg	0.027	ND
Aroclor-1248	1	mg/kg	0.027	ND
Aroclor-1254	1	mg/kg	0.027	ND
Aroclor-1260	1	mg/kg	0.027	ND
Aroclor-1262	1	mg/kg	0.027	ND
Aroclor-1268	1	mg/kg	0.027	ND

Sample ID: SB04
Lab#: AC88558-002
Matrix: Soil

Collection Date: 12/2/2015
Receipt Date: 12/3/2015

Surrogate	Conc.	Spike	Low Limit	High Limit	Recovery	Flags
TCMX-Surrogate	90.72	100	30	150	91	
TCMX-Surrogate	81.24	100	30	150	81	
DCB-Surrogate	81.73	100	30	150	82	
DCB-Surrogate	66.87	100	30	150	67	

pH 9040C/9045D

Analyte	DF	Units	RL	Result
pH	1	ph		9.1

Reactive Cyanide

Analyte	DF	Units	RL	Result
Cyanide (Reactive)	1	mg/kg	0.50	ND

Reactive Sulfide

Analyte	DF	Units	RL	Result
Sulfide (Reactive)	1	mg/kg	100	ND

TCLP Metals 6010

Analyte	DF	Units	RL	Result
Arsenic	1	mg/l	0.10	ND
Barium	**1**	**mg/l**	**0.25**	**0.50**
Cadmium	1	mg/l	0.050	ND
Chromium	1	mg/l	0.10	ND
Lead	1	mg/l	0.050	ND
Nickel	1	mg/l	0.10	ND
Selenium	1	mg/l	0.10	ND
Silver	1	mg/l	0.050	ND

Total PetroleumHydrocarbons8015B(C8-C40)

Analyte	DF	Units	RL	Result
Total Petroleum Hydrocarbons	1	mg/kg	65	71

Volatile Organics (no search) 8260

Analyte	DF	Units	RL	Result
1,1,1-Trichloroethane	0.899	mg/kg	0.0019	ND
1,1,2,2-Tetrachloroethane	0.899	mg/kg	0.0019	ND
1,1,2-Trichloro-1,2,2-trifluoroethane	0.899	mg/kg	0.0019	ND
1,1,2-Trichloroethane	0.899	mg/kg	0.0019	ND
1,1-Dichloroethane	0.899	mg/kg	0.0019	ND
1,1-Dichloroethene	0.899	mg/kg	0.0019	ND
1,2,3-Trichlorobenzene	0.899	mg/kg	0.0019	ND
1,2,4-Trichlorobenzene	0.899	mg/kg	0.0019	ND
1,2-Dibromo-3-chloropropane	0.899	mg/kg	0.0019	ND
1,2-Dibromoethane	0.899	mg/kg	0.0019	ND
1,2-Dichlorobenzene	0.899	mg/kg	0.0019	ND
1,2-Dichloroethane	0.899	mg/kg	0.00097	ND
1,2-Dichloropropane	0.899	mg/kg	0.0019	ND
1,3-Dichlorobenzene	0.899	mg/kg	0.0019	ND
1,4-Dichlorobenzene	0.899	mg/kg	0.0019	ND
1,4-Dioxane	0.899	mg/kg	0.097	ND
2-Butanone	0.899	mg/kg	0.0019	ND
2-Hexanone	0.899	mg/kg	0.0019	ND
4-Methyl-2-pentanone	0.899	mg/kg	0.0019	ND
Acetone	0.899	mg/kg	0.0097	ND
Benzene	0.899	mg/kg	0.00097	ND
Bromochloromethane	0.899	mg/kg	0.0019	ND
Bromodichloromethane	0.899	mg/kg	0.0019	ND
Bromoform	0.899	mg/kg	0.0019	ND
Bromomethane	0.899	mg/kg	0.0019	ND
Carbon disulfide	0.899	mg/kg	0.0019	ND
Carbon tetrachloride	0.899	mg/kg	0.0019	ND
Chlorobenzene	0.899	mg/kg	0.0019	ND
Chloroethane	0.899	mg/kg	0.0019	ND
Chloroform	0.899	mg/kg	0.0019	ND
Chloromethane	0.899	mg/kg	0.0019	ND
cis-1,2-Dichloroethene	0.899	mg/kg	0.0019	ND

NOTE: Soil Results are reported to Dry Weight

Sample ID: SB04 **Collection Date: 12/2/2015**
Lab#: AC88558-002 **Receipt Date: 12/3/2015**
Matrix: Soil

cis-1,3-Dichloropropene	0.899	mg/kg	0.0019	ND
Cyclohexane	0.899	mg/kg	0.0019	ND
Dibromochloromethane	0.899	mg/kg	0.0019	ND
Dichlorodifluoromethane	0.899	mg/kg	0.0019	ND
Ethylbenzene	0.899	mg/kg	0.00097	ND
Isopropylbenzene	0.899	mg/kg	0.00097	ND
m&p-Xylenes	0.899	mg/kg	0.00097	ND
Methyl Acetate	0.899	mg/kg	0.0019	ND
Methylcyclohexane	0.899	mg/kg	0.0019	ND
Methylene chloride	0.899	mg/kg	0.0019	ND
Methyl-t-butyl ether	0.899	mg/kg	0.00097	ND
o-Xylene	0.899	mg/kg	0.00097	ND
Styrene	0.899	mg/kg	0.0019	ND
Tetrachloroethene	0.899	mg/kg	0.0019	ND
Toluene	0.899	mg/kg	0.00097	ND
trans-1,2-Dichloroethene	0.899	mg/kg	0.0019	ND
trans-1,3-Dichloropropene	0.899	mg/kg	0.0019	ND
Trichloroethene	0.899	mg/kg	0.0019	ND
Trichlorofluoromethane	0.899	mg/kg	0.0019	ND
Vinyl chloride	0.899	mg/kg	0.0019	ND
Xylenes (Total)	0.899	mg/kg	0.00097	ND

Surrogate	Conc.	Spike	Low Limit	High Limit	Recovery	Flags
Toluene-d8	27.85	30	70	130	93	
Dibromofluoromethane	33.98	30	70	130	113	
Bromofluorobenzene	31.60	30	70	130	105	
1,2-Dichloroethane-d4	33.01	30	70	130	110	

Sample ID: SB05	**Collection Date: 12/2/2015**
Lab#: AC88558-003	**Receipt Date: 12/3/2015**
Matrix: Soil	

% Solids SM2540G

Analyte	DF	Units	RL	Result
% Solids	1	percent		94

Gasoline range organics 8015(C6-C10)

Analyte	DF	Units	RL	Result
Gasoline Range Organics	96.9	mg/kg	26	ND

Surrogate	Conc.	Spike	Low Limit	High Limit	Recovery	Flags
1,4-Dichlorobenzene-d4	22.26	30	50	150	74	

Ignitability (EPA 1030)

Analyte	DF	Units	RL	Result
Burning Rate (mm/sec)	1			NA
Flame Propagation (POS/NEG)	1			NA
Ignitability Screen (POS/NEG)	1			NEG

Mercury (TCLP) 7470A

Analyte	DF	Units	RL	Result
Mercury	1	mg/l	0.00070	ND

PAH Compounds 8270

Analyte	DF	Units	RL	Result
2-Methylnaphthalene	1	mg/kg	0.035	ND
Acenaphthene	1	mg/kg	0.035	ND
Acenaphthylene	1	mg/kg	0.035	ND
Anthracene	1	mg/kg	0.035	ND
Benzo[a]anthracene	**1**	**mg/kg**	**0.035**	**0.16**
Benzo[a]pyrene	**1**	**mg/kg**	**0.035**	**0.16**
Benzo[b]fluoranthene	**1**	**mg/kg**	**0.035**	**0.21**
Benzo[g,h,i]perylene	**1**	**mg/kg**	**0.035**	**0.10**
Benzo[k]fluoranthene	**1**	**mg/kg**	**0.035**	**0.065**
Chrysene	**1**	**mg/kg**	**0.035**	**0.14**
Dibenzo[a,h]anthracene	**1**	**mg/kg**	**0.035**	**0.042**
Fluoranthene	**1**	**mg/kg**	**0.035**	**0.21**
Fluorene	1	mg/kg	0.035	ND
Indeno[1,2,3-cd]pyrene	**1**	**mg/kg**	**0.035**	**0.093**
Naphthalene	1	mg/kg	0.0089	ND
Phenanthrene	**1**	**mg/kg**	**0.035**	**0.042**
Pyrene	**1**	**mg/kg**	**0.035**	**0.29**

Surrogate	Conc.	Spike	Low Limit	High Limit	Recovery	Flags
Terphenyl-d14	59.30	50	30	130	119	
Phenol-d5	78.06	100	30	130	78	
Nitrobenzene-d5	40.04	50	30	130	80	
2-Fluorophenol	76.48	100	30	130	76	
2-Fluorobiphenyl	43.09	50	30	130	86	
2,4,6-Tribromophenol	103.53	100	30	130	104	

Paint Filter Test 9095A

Analyte	DF	Units	RL	Result
Paint Filter Test	1			NEG

PCB 8082

Analyte	DF	Units	RL	Result
Aroclor (Total)	1	mg/kg	0.027	ND
Aroclor-1016	1	mg/kg	0.027	ND
Aroclor-1221	1	mg/kg	0.027	ND
Aroclor-1232	1	mg/kg	0.027	ND
Aroclor-1242	1	mg/kg	0.027	ND
Aroclor-1248	1	mg/kg	0.027	ND
Aroclor-1254	1	mg/kg	0.027	ND
Aroclor-1260	1	mg/kg	0.027	ND
Aroclor-1262	1	mg/kg	0.027	ND
Aroclor-1268	1	mg/kg	0.027	ND

Sample ID: SB05 | **Collection Date: 12/2/2015**
Lab#: AC88558-003 | **Receipt Date: 12/3/2015**
Matrix: Soil

Surrogate	Conc.	Spike	Low Limit	High Limit	Recovery	Flags
TCMX-Surrogate	84.78	100	30	150	85	
TCMX-Surrogate	74.74	100	30	150	75	
DCB-Surrogate	75.59	100	30	150	76	
DCB-Surrogate	62.43	100	30	150	62	

pH 9040C/9045D

Analyte	DF	Units	RL	Result
pH	1	ph		8.8

Reactive Cyanide

Analyte	DF	Units	RL	Result
Cyanide (Reactive)	1	mg/kg	0.50	ND

Reactive Sulfide

Analyte	DF	Units	RL	Result
Sulfide (Reactive)	1	mg/kg	100	ND

TCLP Metals 6010

Analyte	DF	Units	RL	Result
Arsenic	1	mg/l	0.10	ND
Barium	**1**	**mg/l**	**0.25**	**0.41**
Cadmium	1	mg/l	0.050	ND
Chromium	1	mg/l	0.10	ND
Lead	1	mg/l	0.050	ND
Nickel	1	mg/l	0.10	ND
Selenium	1	mg/l	0.10	ND
Silver	1	mg/l	0.050	ND

Total PetroleumHydrocarbons8015B(C8-C40)

Analyte	DF	Units	RL	Result
Total Petroleum Hydrocarbons	1	mg/kg	64	ND

Volatile Organics (no search) 8260

Analyte	DF	Units	RL	Result
1,1,1-Trichloroethane	0.912	mg/kg	0.0019	ND
1,1,2,2-Tetrachloroethane	0.912	mg/kg	0.0019	ND
1,1,2-Trichloro-1,2,2-trifluoroethane	0.912	mg/kg	0.0019	ND
1,1,2-Trichloroethane	0.912	mg/kg	0.0019	ND
1,1-Dichloroethane	0.912	mg/kg	0.0019	ND
1,1-Dichloroethene	0.912	mg/kg	0.0019	ND
1,2,3-Trichlorobenzene	0.912	mg/kg	0.0019	ND
1,2,4-Trichlorobenzene	0.912	mg/kg	0.0019	ND
1,2-Dibromo-3-chloropropane	0.912	mg/kg	0.0019	ND
1,2-Dibromoethane	0.912	mg/kg	0.0019	ND
1,2-Dichlorobenzene	0.912	mg/kg	0.0019	ND
1,2-Dichloroethane	0.912	mg/kg	0.00097	ND
1,2-Dichloropropane	0.912	mg/kg	0.0019	ND
1,3-Dichlorobenzene	0.912	mg/kg	0.0019	ND
1,4-Dichlorobenzene	0.912	mg/kg	0.0019	ND
1,4-Dioxane	0.912	mg/kg	0.097	ND
2-Butanone	0.912	mg/kg	0.0019	ND
2-Hexanone	0.912	mg/kg	0.0019	ND
4-Methyl-2-pentanone	0.912	mg/kg	0.0019	ND
Acetone	0.912	mg/kg	0.0097	ND
Benzene	0.912	mg/kg	0.00097	ND
Bromochloromethane	0.912	mg/kg	0.0019	ND
Bromodichloromethane	0.912	mg/kg	0.0019	ND
Bromoform	0.912	mg/kg	0.0019	ND
Bromomethane	0.912	mg/kg	0.0019	ND
Carbon disulfide	0.912	mg/kg	0.0019	ND
Carbon tetrachloride	0.912	mg/kg	0.0019	ND
Chlorobenzene	0.912	mg/kg	0.0019	ND
Chloroethane	0.912	mg/kg	0.0019	ND
Chloroform	0.912	mg/kg	0.0019	ND
Chloromethane	0.912	mg/kg	0.0019	ND
cis-1,2-Dichloroethene	0.912	mg/kg	0.0019	ND

Sample ID: SB05
Lab#: AC88558-003
Matrix: Soil

Collection Date: 12/2/2015
Receipt Date: 12/3/2015

cis-1,3-Dichloropropene	0.912	mg/kg	0.0019	ND
Cyclohexane	0.912	mg/kg	0.0019	ND
Dibromochloromethane	0.912	mg/kg	0.0019	ND
Dichlorodifluoromethane	0.912	mg/kg	0.0019	ND
Ethylbenzene	0.912	mg/kg	0.00097	ND
Isopropylbenzene	0.912	mg/kg	0.00097	ND
m&p-Xylenes	0.912	mg/kg	0.00097	ND
Methyl Acetate	0.912	mg/kg	0.0019	ND
Methylcyclohexane	0.912	mg/kg	0.0019	ND
Methylene chloride	0.912	mg/kg	0.0019	ND
Methyl-t-butyl ether	0.912	mg/kg	0.00097	ND
o-Xylene	0.912	mg/kg	0.00097	ND
Styrene	0.912	mg/kg	0.0019	ND
Tetrachloroethene	0.912	mg/kg	0.0019	ND
Toluene	0.912	mg/kg	0.00097	ND
trans-1,2-Dichloroethene	0.912	mg/kg	0.0019	ND
trans-1,3-Dichloropropene	0.912	mg/kg	0.0019	ND
Trichloroethene	0.912	mg/kg	0.0019	ND
Trichlorofluoromethane	0.912	mg/kg	0.0019	ND
Vinyl chloride	0.912	mg/kg	0.0019	ND
Xylenes (Total)	0.912	mg/kg	0.00097	ND

Surrogate	Conc.	Spike	Low Limit	High Limit	Recovery	Flags
Toluene-d8	27.67	30	70	130	92	
Dibromofluoromethane	33.69	30	70	130	112	
Bromofluorobenzene	28.10	30	70	130	94	
1,2-Dichloroethane-d4	36.97	30	70	130	123	

Sample ID: SB07
Lab#: AC88558-004
Matrix: Soil

Collection Date: 12/2/2015
Receipt Date: 12/3/2015

% Solids SM2540G

Analyte	DF	Units	RL	Result
% Solids	1	percent		96

Gasoline range organics 8015(C6-C10)

Analyte	DF	Units	RL	Result
Gasoline Range Organics	93.5	mg/kg	24	ND

Surrogate	Conc.	Spike	Low Limit	High Limit	Recovery	Flags
1,4-Dichlorobenzene-d4	19.81	30	50	150	66	

Ignitability (EPA 1030)

Analyte	DF	Units	RL	Result
Burning Rate (mm/sec)	1			NA
Flame Propagation (POS/NEG)	1			NA
Ignitability Screen (POS/NEG)	1			NEG

Mercury (TCLP) 7470A

Analyte	DF	Units	RL	Result
Mercury	1	mg/l	0.00070	ND

PAH Compounds 8270

Analyte	DF	Units	RL	Result
2-Methylnaphthalene	1	mg/kg	0.035	ND
Acenaphthene	1	mg/kg	0.035	ND
Acenaphthylene	1	mg/kg	0.035	ND
Anthracene	1	mg/kg	0.035	ND
Benzo[a]anthracene	1	mg/kg	0.035	ND
Benzo[a]pyrene	1	mg/kg	0.035	ND
Benzo[b]fluoranthene	1	mg/kg	0.035	ND
Benzo[g,h,i]perylene	1	mg/kg	0.035	ND
Benzo[k]fluoranthene	1	mg/kg	0.035	ND
Chrysene	1	mg/kg	0.035	ND
Dibenzo[a,h]anthracene	1	mg/kg	0.035	ND
Fluoranthene	1	mg/kg	0.035	ND
Fluorene	1	mg/kg	0.035	ND
Indeno[1,2,3-cd]pyrene	1	mg/kg	0.035	ND
Naphthalene	1	mg/kg	0.0087	ND
Phenanthrene	1	mg/kg	0.035	ND
Pyrene	1	mg/kg	0.035	ND

Surrogate	Conc.	Spike	Low Limit	High Limit	Recovery	Flags
Terphenyl-d14	56.76	50	30	130	114	
Phenol-d5	59.39	100	30	130	59	
Nitrobenzene-d5	30.62	50	30	130	61	
2-Fluorophenol	48.15	100	30	130	48	
2-Fluorobiphenyl	34.95	50	30	130	70	
2,4,6-Tribromophenol	52.28	100	30	130	52	

Paint Filter Test 9095A

Analyte	DF	Units	RL	Result
Paint Filter Test	1			NEG

PCB 8082

Analyte	DF	Units	RL	Result
Aroclor (Total)	1	mg/kg	0.026	ND
Aroclor-1016	1	mg/kg	0.026	ND
Aroclor-1221	1	mg/kg	0.026	ND
Aroclor-1232	1	mg/kg	0.026	ND
Aroclor-1242	1	mg/kg	0.026	ND
Aroclor-1248	1	mg/kg	0.026	ND
Aroclor-1254	1	mg/kg	0.026	ND
Aroclor-1260	1	mg/kg	0.026	ND
Aroclor-1262	1	mg/kg	0.026	ND
Aroclor-1268	1	mg/kg	0.026	ND

Sample ID: SB07
Lab#: AC88558-004
Matrix: Soil

Collection Date: 12/2/2015
Receipt Date: 12/3/2015

Surrogate	Conc.	Spike	Low Limit	High Limit	Recovery	Flags
TCMX-Surrogate	84.64	100	30	150	85	
TCMX-Surrogate	74.79	100	30	150	75	
DCB-Surrogate	76.74	100	30	150	77	
DCB-Surrogate	65.03	100	30	150	65	

pH 9040C/9045D

Analyte	DF	Units	RL	Result
pH	1	ph		12

Reactive Cyanide

Analyte	DF	Units	RL	Result
Cyanide (Reactive)	1	mg/kg	0.50	ND

Reactive Sulfide

Analyte	DF	Units	RL	Result
Sulfide (Reactive)	1	mg/kg	100	ND

TCLP Metals 6010

Analyte	DF	Units	RL	Result
Arsenic	1	mg/l	0.10	ND
Barium	**1**	**mg/l**	**0.25**	**0.35**
Cadmium	1	mg/l	0.050	ND
Chromium	1	mg/l	0.10	ND
Lead	1	mg/l	0.050	ND
Nickel	1	mg/l	0.10	ND
Selenium	1	mg/l	0.10	ND
Silver	1	mg/l	0.050	ND

Total PetroleumHydrocarbons8015B(C8-C40)

Analyte	DF	Units	RL	Result
Total Petroleum Hydrocarbons	1	mg/kg	63	ND

Volatile Organics (no search) 8260

Analyte	DF	Units	RL	Result
1,1,1-Trichloroethane	0.978	mg/kg	0.0020	ND
1,1,2,2-Tetrachloroethane	0.978	mg/kg	0.0020	ND
1,1,2-Trichloro-1,2,2-trifluoroethane	0.978	mg/kg	0.0020	ND
1,1,2-Trichloroethane	0.978	mg/kg	0.0020	ND
1,1-Dichloroethane	0.978	mg/kg	0.0020	ND
1,1-Dichloroethene	0.978	mg/kg	0.0020	ND
1,2,3-Trichlorobenzene	0.978	mg/kg	0.0020	ND
1,2,4-Trichlorobenzene	0.978	mg/kg	0.0020	ND
1,2-Dibromo-3-chloropropane	0.978	mg/kg	0.0020	ND
1,2-Dibromoethane	0.978	mg/kg	0.0020	ND
1,2-Dichlorobenzene	0.978	mg/kg	0.0020	ND
1,2-Dichloroethane	0.978	mg/kg	0.0010	ND
1,2-Dichloropropane	0.978	mg/kg	0.0020	ND
1,3-Dichlorobenzene	0.978	mg/kg	0.0020	ND
1,4-Dichlorobenzene	0.978	mg/kg	0.0020	ND
1,4-Dioxane	0.978	mg/kg	0.10	ND
2-Butanone	0.978	mg/kg	0.0020	ND
2-Hexanone	0.978	mg/kg	0.0020	ND
4-Methyl-2-pentanone	0.978	mg/kg	0.0020	ND
Acetone	0.978	mg/kg	0.010	ND
Benzene	0.978	mg/kg	0.0010	ND
Bromochloromethane	0.978	mg/kg	0.0020	ND
Bromodichloromethane	0.978	mg/kg	0.0020	ND
Bromoform	0.978	mg/kg	0.0020	ND
Bromomethane	0.978	mg/kg	0.0020	ND
Carbon disulfide	0.978	mg/kg	0.0020	ND
Carbon tetrachloride	0.978	mg/kg	0.0020	ND
Chlorobenzene	0.978	mg/kg	0.0020	ND
Chloroethane	0.978	mg/kg	0.0020	ND
Chloroform	0.978	mg/kg	0.0020	ND
Chloromethane	0.978	mg/kg	0.0020	ND
cis-1,2-Dichloroethene	0.978	mg/kg	0.0020	ND

NOTE: Soil Results are reported to Dry Weight

HAZ-8

Sample ID: SB07
Lab#: AC88558-004
Matrix: Soil

Collection Date: 12/2/2015
Receipt Date: 12/3/2015

cis-1,3-Dichloropropene	0.978	mg/kg	0.0020	ND
Cyclohexane	0.978	mg/kg	0.0020	ND
Dibromochloromethane	0.978	mg/kg	0.0020	ND
Dichlorodifluoromethane	0.978	mg/kg	0.0020	ND
Ethylbenzene	0.978	mg/kg	0.0010	ND
Isopropylbenzene	0.978	mg/kg	0.0010	ND
m&p-Xylenes	0.978	mg/kg	0.0010	ND
Methyl Acetate	0.978	mg/kg	0.0020	ND
Methylcyclohexane	0.978	mg/kg	0.0020	ND
Methylene chloride	0.978	mg/kg	0.0020	ND
Methyl-t-butyl ether	0.978	mg/kg	0.0010	ND
o-Xylene	0.978	mg/kg	0.0010	ND
Styrene	0.978	mg/kg	0.0020	ND
Tetrachloroethene	0.978	mg/kg	0.0020	ND
Toluene	0.978	mg/kg	0.0010	ND
trans-1,2-Dichloroethene	0.978	mg/kg	0.0020	ND
trans-1,3-Dichloropropene	0.978	mg/kg	0.0020	ND
Trichloroethene	0.978	mg/kg	0.0020	ND
Trichlorofluoromethane	0.978	mg/kg	0.0020	ND
Vinyl chloride	0.978	mg/kg	0.0020	ND
Xylenes (Total)	0.978	mg/kg	0.0010	ND

Surrogate	Conc.	Spike	Low Limit	High Limit	Recovery	Flags
Toluene-d8	30.22	30	70	130	101	
Dibromofluoromethane	33.72	30	70	130	112	
Bromofluorobenzene	27.90	30	70	130	93	
1,2-Dichloroethane-d4	30.73	30	70	130	102	

HA7 8c

Sample ID: SB08
Lab#: AC88558-005
Matrix: Soil

Collection Date: 12/2/2015
Receipt Date: 12/3/2015

% Solids SM2540G

Analyte	DF	Units	RL	Result
% Solids	1	percent		85

Gasoline range organics 8015(C6-C10)

Analyte	DF	Units	RL	Result
Gasoline Range Organics	86.1	mg/kg	25	ND

Surrogate	Conc.	Spike	Low Limit	High Limit	Recovery	Flags
1,4-Dichlorobenzene-d4	19.67	30	50	150	66	

Ignitability (EPA 1030)

Analyte	DF	Units	RL	Result
Burning Rate (mm/sec)	1			NA
Flame Propagation (POS/NEG)	1			NA
Ignitability Screen (POS/NEG)	1			NEG

Mercury (TCLP) 7470A

Analyte	DF	Units	RL	Result
Mercury	1	mg/l	0.00070	ND

PAH Compounds 8270

Analyte	DF	Units	RL	Result
2-Methylnaphthalene	1	mg/kg	0.039	ND
Acenaphthene	1	mg/kg	0.039	ND
Acenaphthylene	1	mg/kg	0.039	ND
Anthracene	1	mg/kg	0.039	ND
Benzo[a]anthracene	1	mg/kg	0.039	ND
Benzo[a]pyrene	1	mg/kg	0.039	ND
Benzo[b]fluoranthene	1	mg/kg	0.039	ND
Benzo[g,h,i]perylene	1	mg/kg	0.039	ND
Benzo[k]fluoranthene	1	mg/kg	0.039	ND
Chrysene	1	mg/kg	0.039	ND
Dibenzo[a,h]anthracene	1	mg/kg	0.039	ND
Fluoranthene	1	mg/kg	0.039	ND
Fluorene	1	mg/kg	0.039	ND
Indeno[1,2,3-cd]pyrene	1	mg/kg	0.039	ND
Naphthalene	1	mg/kg	0.0098	ND
Phenanthrene	1	mg/kg	0.039	ND
Pyrene	1	mg/kg	0.039	ND

Surrogate	Conc.	Spike	Low Limit	High Limit	Recovery	Flags
Terphenyl-d14	51.69	50	30	130	103	
Phenol-d5	72.91	100	30	130	73	
Nitrobenzene-d5	39.34	50	30	130	79	
2-Fluorophenol	73.19	100	30	130	73	
2-Fluorobiphenyl	41.53	50	30	130	83	
2,4,6-Tribromophenol	91.71	100	30	130	92	

Paint Filter Test 9095A

Analyte	DF	Units	RL	Result
Paint Filter Test	1			NEG

PCB 8082

Analyte	DF	Units	RL	Result
Aroclor (Total)	1	mg/kg	0.029	ND
Aroclor-1016	1	mg/kg	0.029	ND
Aroclor-1221	1	mg/kg	0.029	ND
Aroclor-1232	1	mg/kg	0.029	ND
Aroclor-1242	1	mg/kg	0.029	ND
Aroclor-1248	1	mg/kg	0.029	ND
Aroclor-1254	1	mg/kg	0.029	ND
Aroclor-1260	1	mg/kg	0.029	ND
Aroclor-1262	1	mg/kg	0.029	ND
Aroclor-1268	1	mg/kg	0.029	ND

Sample ID: SB08
Lab#: AC88558-005
Matrix: Soil

Collection Date: 12/2/2015
Receipt Date: 12/3/2015

Surrogate	Conc.	Spike	Low Limit	High Limit	Recovery	Flags
TCMX-Surrogate	89.06	100	30	150	89	
TCMX-Surrogate	79.00	100	30	150	79	
DCB-Surrogate	80.39	100	30	150	80	
DCB-Surrogate	68.17	100	30	150	68	

pH 9040C/9045D

Analyte	DF	Units	RL	Result
pH	1	ph		8.6

Reactive Cyanide

Analyte	DF	Units	RL	Result
Cyanide (Reactive)	1	mg/kg	0.50	ND

Reactive Sulfide

Analyte	DF	Units	RL	Result
Sulfide (Reactive)	1	mg/kg	100	ND

TCLP Metals 6010

Analyte	DF	Units	RL	Result
Arsenic	1	mg/l	0.10	ND
Barium	**1**	**mg/l**	**0.25**	**0.30**
Cadmium	1	mg/l	0.050	ND
Chromium	1	mg/l	0.10	ND
Lead	1	mg/l	0.050	ND
Nickel	1	mg/l	0.10	ND
Selenium	1	mg/l	0.10	ND
Silver	1	mg/l	0.050	ND

Total PetroleumHydrocarbons8015B(C8-C40)

Analyte	DF	Units	RL	Result
Total Petroleum Hydrocarbons	1	mg/kg	71	ND

Volatile Organics (no search) 8260

Analyte	DF	Units	RL	Result
1,1,1-Trichloroethane	0.911	mg/kg	0.0021	ND
1,1,2,2-Tetrachloroethane	0.911	mg/kg	0.0021	ND
1,1,2-Trichloro-1,2,2-trifluoroethane	0.911	mg/kg	0.0021	ND
1,1,2-Trichloroethane	0.911	mg/kg	0.0021	ND
1,1-Dichloroethane	0.911	mg/kg	0.0021	ND
1,1-Dichloroethene	0.911	mg/kg	0.0021	ND
1,2,3-Trichlorobenzene	0.911	mg/kg	0.0021	ND
1,2,4-Trichlorobenzene	0.911	mg/kg	0.0021	ND
1,2-Dibromo-3-chloropropane	0.911	mg/kg	0.0021	ND
1,2-Dibromoethane	0.911	mg/kg	0.0021	ND
1,2-Dichlorobenzene	0.911	mg/kg	0.0021	ND
1,2-Dichloroethane	0.911	mg/kg	0.0011	ND
1,2-Dichloropropane	0.911	mg/kg	0.0021	ND
1,3-Dichlorobenzene	0.911	mg/kg	0.0021	ND
1,4-Dichlorobenzene	0.911	mg/kg	0.0021	ND
1,4-Dioxane	0.911	mg/kg	0.11	ND
2-Butanone	0.911	mg/kg	0.0021	ND
2-Hexanone	0.911	mg/kg	0.0021	ND
4-Methyl-2-pentanone	0.911	mg/kg	0.0021	ND
Acetone	0.911	mg/kg	0.011	ND
Benzene	0.911	mg/kg	0.0011	ND
Bromochloromethane	0.911	mg/kg	0.0021	ND
Bromodichloromethane	0.911	mg/kg	0.0021	ND
Bromoform	0.911	mg/kg	0.0021	ND
Bromomethane	0.911	mg/kg	0.0021	ND
Carbon disulfide	0.911	mg/kg	0.0021	ND
Carbon tetrachloride	0.911	mg/kg	0.0021	ND
Chlorobenzene	0.911	mg/kg	0.0021	ND
Chloroethane	0.911	mg/kg	0.0021	ND
Chloroform	0.911	mg/kg	0.0021	ND
Chloromethane	0.911	mg/kg	0.0021	ND
cis-1,2-Dichloroethene	0.911	mg/kg	0.0021	ND

Sample ID: SB08
Lab#: AC88558-005
Matrix: Soil

Collection Date: 12/2/2015
Receipt Date: 12/3/2015

cis-1,3-Dichloropropene	0.911	mg/kg	0.0021	ND
Cyclohexane	0.911	mg/kg	0.0021	ND
Dibromochloromethane	0.911	mg/kg	0.0021	ND
Dichlorodifluoromethane	0.911	mg/kg	0.0021	ND
Ethylbenzene	0.911	mg/kg	0.0011	ND
Isopropylbenzene	0.911	mg/kg	0.0011	ND
m&p-Xylenes	0.911	mg/kg	0.0011	ND
Methyl Acetate	0.911	mg/kg	0.0021	ND
Methylcyclohexane	0.911	mg/kg	0.0021	ND
Methylene chloride	**0.911**	**mg/kg**	**0.0021**	**0.0026**
Methyl-t-butyl ether	0.911	mg/kg	0.0011	ND
o-Xylene	0.911	mg/kg	0.0011	ND
Styrene	0.911	mg/kg	0.0021	ND
Tetrachloroethene	0.911	mg/kg	0.0021	ND
Toluene	0.911	mg/kg	0.0011	ND
trans-1,2-Dichloroethene	0.911	mg/kg	0.0021	ND
trans-1,3-Dichloropropene	0.911	mg/kg	0.0021	ND
Trichloroethene	0.911	mg/kg	0.0021	ND
Trichlorofluoromethane	0.911	mg/kg	0.0021	ND
Vinyl chloride	0.911	mg/kg	0.0021	ND
Xylenes (Total)	0.911	mg/kg	0.0011	ND

Surrogate	Conc.	Spike	Low Limit	High Limit	Recovery	Flags
Toluene-d8	28.22	30	70	130	94	
Dibromofluoromethane	36.20	30	70	130	121	
Bromofluorobenzene	27.63	30	70	130	92	
1,2-Dichloroethane-d4	32.72	30	70	130	109	

NOTE: Soil Results are reported to Dry Weight

Project #: 5120327

HAZ-8 8

Sample ID: SB09
Lab#: AC88558-006
Matrix: Soil

Collection Date: 12/2/2015
Receipt Date: 12/3/2015

% Solids SM2540G

Analyte	DF	Units	RL	Result
% Solids	1	percent		80

Gasoline range organics 8015(C6-C10)

Analyte	DF	Units	RL	Result
Gasoline Range Organics	90.4	mg/kg	28	ND

Surrogate	Conc.	Spike	Low Limit	High Limit	Recovery	Flags
1,4-Dichlorobenzene-d4	20.82	30	50	150	69	

Ignitability (EPA 1030)

Analyte	DF	Units	RL	Result
Burning Rate (mm/sec)	1			NA
Flame Propagation (POS/NEG)	1			NA
Ignitability Screen (POS/NEG)	1			NEG

Mercury (TCLP) 7470A

Analyte	DF	Units	RL	Result
Mercury	1	mg/l	0.00070	ND

PAH Compounds 8270

Analyte	DF	Units	RL	Result
2-Methylnaphthalene	1	mg/kg	0.042	ND
Acenaphthene	1	mg/kg	0.042	ND
Acenaphthylene	1	mg/kg	0.042	ND
Anthracene	1	mg/kg	0.042	ND
Benzo[a]anthracene	1	mg/kg	0.042	0.27
Benzo[a]pyrene	1	mg/kg	0.042	0.24
Benzo[b]fluoranthene	1	mg/kg	0.042	0.34
Benzo[g,h,i]perylene	1	mg/kg	0.042	0.15
Benzo[k]fluoranthene	1	mg/kg	0.042	0.11
Chrysene	1	mg/kg	0.042	0.23
Dibenzo[a,h]anthracene	1	mg/kg	0.042	0.052
Fluoranthene	1	mg/kg	0.042	0.28
Fluorene	1	mg/kg	0.042	ND
Indeno[1,2,3-cd]pyrene	1	mg/kg	0.042	0.14
Naphthalene	1	mg/kg	0.010	ND
Phenanthrene	1	mg/kg	0.042	0.085
Pyrene	1	mg/kg	0.042	0.38

Surrogate	Conc.	Spike	Low Limit	High Limit	Recovery	Flags
Terphenyl-d14	52.72	50	30	130	105	
Phenol-d5	75.64	100	30	130	76	
Nitrobenzene-d5	39.47	50	30	130	79	
2-Fluorophenol	74.69	100	30	130	75	
2-Fluorobiphenyl	41.98	50	30	130	84	
2,4,6-Tribromophenol	93.47	100	30	130	93	

Paint Filter Test 9095A

Analyte	DF	Units	RL	Result
Paint Filter Test	1			NEG

PCB 8082

Analyte	DF	Units	RL	Result
Aroclor (Total)	1	mg/kg	0.031	ND
Aroclor-1016	1	mg/kg	0.031	ND
Aroclor-1221	1	mg/kg	0.031	ND
Aroclor-1232	1	mg/kg	0.031	ND
Aroclor-1242	1	mg/kg	0.031	ND
Aroclor-1248	1	mg/kg	0.031	ND
Aroclor-1254	1	mg/kg	0.031	ND
Aroclor-1260	1	mg/kg	0.031	ND
Aroclor-1262	1	mg/kg	0.031	ND
Aroclor-1268	1	mg/kg	0.031	ND

Sample ID: SB09 | **Collection Date: 12/2/2015**
Lab#: AC88558-006 | **Receipt Date: 12/3/2015**
Matrix: Soil

Surrogate	Conc.	Spike	Low Limit	High Limit	Recovery	Flags
TCMX-Surrogate	89.03	100	30	150	89	
TCMX-Surrogate	80.02	100	30	150	80	
DCB-Surrogate	82.11	100	30	150	82	
DCB-Surrogate	69.34	100	30	150	69	

pH 9040C/9045D

Analyte	DF	Units	RL	Result
pH	1	ph		8.2

Reactive Cyanide

Analyte	DF	Units	RL	Result
Cyanide (Reactive)	1	mg/kg	0.50	ND

Reactive Sulfide

Analyte	DF	Units	RL	Result
Sulfide (Reactive)	1	mg/kg	100	ND

TCLP Metals 6010

Analyte	DF	Units	RL	Result
Arsenic	1	mg/l	0.10	ND
Barium	1	mg/l	0.25	ND
Cadmium	1	mg/l	0.050	ND
Chromium	1	mg/l	0.10	ND
Lead	1	mg/l	0.050	ND
Nickel	1	mg/l	0.10	ND
Selenium	1	mg/l	0.10	ND
Silver	1	mg/l	0.050	ND

Total PetroleumHydrocarbons8015B(C8-C40)

Analyte	DF	Units	RL	Result
Total Petroleum Hydrocarbons	1	mg/kg	75	ND

Volatile Organics (no search) 8260

Analyte	DF	Units	RL	Result
1,1,1-Trichloroethane	0.975	mg/kg	0.0024	ND
1,1,2,2-Tetrachloroethane	0.975	mg/kg	0.0024	ND
1,1,2-Trichloro-1,2,2-trifluoroethane	0.975	mg/kg	0.0024	ND
1,1,2-Trichloroethane	0.975	mg/kg	0.0024	ND
1,1-Dichloroethane	0.975	mg/kg	0.0024	ND
1,1-Dichloroethene	0.975	mg/kg	0.0024	ND
1,2,3-Trichlorobenzene	0.975	mg/kg	0.0024	ND
1,2,4-Trichlorobenzene	0.975	mg/kg	0.0024	ND
1,2-Dibromo-3-chloropropane	0.975	mg/kg	0.0024	ND
1,2-Dibromoethane	0.975	mg/kg	0.0024	ND
1,2-Dichlorobenzene	0.975	mg/kg	0.0024	ND
1,2-Dichloroethane	0.975	mg/kg	0.0012	ND
1,2-Dichloropropane	0.975	mg/kg	0.0024	ND
1,3-Dichlorobenzene	0.975	mg/kg	0.0024	ND
1,4-Dichlorobenzene	0.975	mg/kg	0.0024	ND
1,4-Dioxane	0.975	mg/kg	0.12	ND
2-Butanone	0.975	mg/kg	0.0024	ND
2-Hexanone	0.975	mg/kg	0.0024	ND
4-Methyl-2-pentanone	0.975	mg/kg	0.0024	ND
Acetone	0.975	mg/kg	0.012	ND
Benzene	0.975	mg/kg	0.0012	ND
Bromochloromethane	0.975	mg/kg	0.0024	ND
Bromodichloromethane	0.975	mg/kg	0.0024	ND
Bromoform	0.975	mg/kg	0.0024	ND
Bromomethane	0.975	mg/kg	0.0024	ND
Carbon disulfide	0.975	mg/kg	0.0024	ND
Carbon tetrachloride	0.975	mg/kg	0.0024	ND
Chlorobenzene	0.975	mg/kg	0.0024	ND
Chloroethane	0.975	mg/kg	0.0024	ND
Chloroform	0.975	mg/kg	0.0024	ND
Chloromethane	0.975	mg/kg	0.0024	ND
cis-1,2-Dichloroethene	0.975	mg/kg	0.0024	ND

HAZ-90

Sample ID: SB09 **Collection Date: 12/2/2015**
Lab#: AC88558-006 **Receipt Date: 12/3/2015**
Matrix: Soil

cis-1,3-Dichloropropene	0.975	mg/kg	0.0024	ND
Cyclohexane	0.975	mg/kg	0.0024	ND
Dibromochloromethane	0.975	mg/kg	0.0024	ND
Dichlorodifluoromethane	0.975	mg/kg	0.0024	ND
Ethylbenzene	0.975	mg/kg	0.0012	ND
Isopropylbenzene	0.975	mg/kg	0.0012	ND
m&p-Xylenes	0.975	mg/kg	0.0012	ND
Methyl Acetate	0.975	mg/kg	0.0024	ND
Methylcyclohexane	0.975	mg/kg	0.0024	ND
Methylene chloride	0.975	mg/kg	0.0024	ND
Methyl-t-butyl ether	0.975	mg/kg	0.0012	ND
o-Xylene	0.975	mg/kg	0.0012	ND
Styrene	0.975	mg/kg	0.0024	ND
Tetrachloroethene	0.975	mg/kg	0.0024	ND
Toluene	0.975	mg/kg	0.0012	ND
trans-1,2-Dichloroethene	0.975	mg/kg	0.0024	ND
trans-1,3-Dichloropropene	0.975	mg/kg	0.0024	ND
Trichloroethene	0.975	mg/kg	0.0024	ND
Trichlorofluoromethane	0.975	mg/kg	0.0024	ND
Vinyl chloride	0.975	mg/kg	0.0024	ND
Xylenes (Total)	0.975	mg/kg	0.0012	ND

Surrogate	Conc.	Spike	Low Limit	High Limit	Recovery	Flags
Toluene-d8	29.38	30	70	130	98	
Dibromofluoromethane	32.61	30	70	130	109	
Bromofluorobenzene	28.81	30	70	130	96	
1,2-Dichloroethane-d4	31.09	30	70	130	104	

Sample ID: SB10	**Collection Date: 12/2/2015**
Lab#: AC88558-007	**Receipt Date: 12/3/2015**
Matrix: Soil	

% Solids SM2540G

Analyte	DF	Units	RL	Result
% Solids	1	percent		88

Gasoline range organics 8015(C6-C10)

Analyte	DF	Units	RL	Result
Gasoline Range Organics	88.8	mg/kg	25	ND

Surrogate	Conc.	Spike	Low Limit	High Limit	Recovery	Flags
1,4-Dichlorobenzene-d4	21.44	30	50	150	71	

Ignitability (EPA 1030)

Analyte	DF	Units	RL	Result
Burning Rate (mm/sec)	1			NA
Flame Propagation (POS/NEG)	1			NA
Ignitability Screen (POS/NEG)	1			NEG

Mercury (TCLP) 7470A

Analyte	DF	Units	RL	Result
Mercury	1	mg/l	0.00070	ND

PAH Compounds 8270

Analyte	DF	Units	RL	Result
2-Methylnaphthalene	1	mg/kg	0.076	ND
Acenaphthene	1	mg/kg	0.076	ND
Acenaphthylene	1	mg/kg	0.076	ND
Anthracene	1	mg/kg	0.076	ND
Benzo[a]anthracene	1	mg/kg	0.076	ND
Benzo[a]pyrene	1	mg/kg	0.076	ND
Benzo[b]fluoranthene	1	mg/kg	0.076	ND
Benzo[g,h,i]perylene	1	mg/kg	0.076	ND
Benzo[k]fluoranthene	1	mg/kg	0.076	ND
Chrysene	1	mg/kg	0.076	ND
Dibenzo[a,h]anthracene	1	mg/kg	0.076	ND
Fluoranthene	**1**	**mg/kg**	**0.076**	**0.078**
Fluorene	1	mg/kg	0.076	ND
Indeno[1,2,3-cd]pyrene	1	mg/kg	0.076	ND
Naphthalene	1	mg/kg	0.019	ND
Phenanthrene	1	mg/kg	0.076	ND
Pyrene	**1**	**mg/kg**	**0.076**	**0.10**

Surrogate	Conc.	Spike	Low Limit	High Limit	Recovery	Flags
Terphenyl-d14	34.39	50	30	130	138	Sb8
Phenol-d5	48.35	100	30	130	97	
Nitrobenzene-d5	24.78	50	30	130	99	
2-Fluorophenol	46.02	100	30	130	92	
2-Fluorobiphenyl	26.95	50	30	130	108	
2,4,6-Tribromophenol	59.67	100	30	130	119	

Paint Filter Test 9095A

Analyte	DF	Units	RL	Result
Paint Filter Test	1			NEG

PCB 8082

Analyte	DF	Units	RL	Result
Aroclor (Total)	1	mg/kg	0.028	ND
Aroclor-1016	1	mg/kg	0.028	ND
Aroclor-1221	1	mg/kg	0.028	ND
Aroclor-1232	1	mg/kg	0.028	ND
Aroclor-1242	1	mg/kg	0.028	ND
Aroclor-1248	1	mg/kg	0.028	ND
Aroclor-1254	1	mg/kg	0.028	ND
Aroclor-1260	1	mg/kg	0.028	ND
Aroclor-1262	1	mg/kg	0.028	ND
Aroclor-1268	1	mg/kg	0.028	ND

Sample ID: SB10 | **Collection Date: 12/2/2015**
Lab#: AC88558-007 | **Receipt Date: 12/3/2015**
Matrix: Soil

Surrogate	Conc.	Spike	Low Limit	High Limit	Recovery	Flags
TCMX-Surrogate	84.81	100	30	150	85	
TCMX-Surrogate	76.73	100	30	150	77	
DCB-Surrogate	76.79	100	30	150	77	
DCB-Surrogate	65.68	100	30	150	66	

pH 9040C/9045D

Analyte	DF	Units	RL	Result
pH	1	ph		8.3

Reactive Cyanide

Analyte	DF	Units	RL	Result
Cyanide (Reactive)	1	mg/kg	0.50	ND

Reactive Sulfide

Analyte	DF	Units	RL	Result
Sulfide (Reactive)	1	mg/kg	100	ND

TCLP Metals 6010

Analyte	DF	Units	RL	Result
Arsenic	1	mg/l	0.10	ND
Barium	**1**	**mg/l**	**0.25**	**0.30**
Cadmium	1	mg/l	0.050	ND
Chromium	1	mg/l	0.10	ND
Lead	1	mg/l	0.050	ND
Nickel	1	mg/l	0.10	ND
Selenium	1	mg/l	0.10	ND
Silver	1	mg/l	0.050	ND

Total PetroleumHydrocarbons8015B(C8-C40)

Analyte	DF	Units	RL	Result
Total Petroleum Hydrocarbons	1	mg/kg	68	ND

Volatile Organics (no search) 8260

Analyte	DF	Units	RL	Result
1,1,1-Trichloroethane	0.99	mg/kg	0.0023	ND
1,1,2,2-Tetrachloroethane	0.99	mg/kg	0.0023	ND
1,1,2-Trichloro-1,2,2-trifluoroethane	0.99	mg/kg	0.0023	ND
1,1,2-Trichloroethane	0.99	mg/kg	0.0023	ND
1,1-Dichloroethane	0.99	mg/kg	0.0023	ND
1,1-Dichloroethene	0.99	mg/kg	0.0023	ND
1,2,3-Trichlorobenzene	0.99	mg/kg	0.0023	ND
1,2,4-Trichlorobenzene	0.99	mg/kg	0.0023	ND
1,2-Dibromo-3-chloropropane	0.99	mg/kg	0.0023	ND
1,2-Dibromoethane	0.99	mg/kg	0.0023	ND
1,2-Dichlorobenzene	0.99	mg/kg	0.0023	ND
1,2-Dichloroethane	0.99	mg/kg	0.0011	ND
1,2-Dichloropropane	0.99	mg/kg	0.0023	ND
1,3-Dichlorobenzene	0.99	mg/kg	0.0023	ND
1,4-Dichlorobenzene	0.99	mg/kg	0.0023	ND
1,4-Dioxane	0.99	mg/kg	0.11	ND
2-Butanone	0.99	mg/kg	0.0023	ND
2-Hexanone	0.99	mg/kg	0.0023	ND
4-Methyl-2-pentanone	0.99	mg/kg	0.0023	ND
Acetone	0.99	mg/kg	0.011	ND
Benzene	0.99	mg/kg	0.0011	ND
Bromochloromethane	0.99	mg/kg	0.0023	ND
Bromodichloromethane	0.99	mg/kg	0.0023	ND
Bromoform	0.99	mg/kg	0.0023	ND
Bromomethane	0.99	mg/kg	0.0023	ND
Carbon disulfide	0.99	mg/kg	0.0023	ND
Carbon tetrachloride	0.99	mg/kg	0.0023	ND
Chlorobenzene	0.99	mg/kg	0.0023	ND
Chloroethane	0.99	mg/kg	0.0023	ND
Chloroform	0.99	mg/kg	0.0023	ND
Chloromethane	0.99	mg/kg	0.0023	ND
cis-1,2-Dichloroethene	0.99	mg/kg	0.0023	ND

Sample ID: SB10
Lab#: AC88558-007
Matrix: Soil

Collection Date: 12/2/2015
Receipt Date: 12/3/2015

cis-1,3-Dichloropropene	0.99	mg/kg	0.0023	ND
Cyclohexane	0.99	mg/kg	0.0023	ND
Dibromochloromethane	0.99	mg/kg	0.0023	ND
Dichlorodifluoromethane	0.99	mg/kg	0.0023	ND
Ethylbenzene	0.99	mg/kg	0.0011	ND
Isopropylbenzene	0.99	mg/kg	0.0011	ND
m&p-Xylenes	0.99	mg/kg	0.0011	ND
Methyl Acetate	0.99	mg/kg	0.0023	ND
Methylcyclohexane	0.99	mg/kg	0.0023	ND
Methylene chloride	0.99	mg/kg	0.0023	ND
Methyl-t-butyl ether	0.99	mg/kg	0.0011	ND
o-Xylene	0.99	mg/kg	0.0011	ND
Styrene	0.99	mg/kg	0.0023	ND
Tetrachloroethene	0.99	mg/kg	0.0023	ND
Toluene	0.99	mg/kg	0.0011	ND
trans-1,2-Dichloroethene	0.99	mg/kg	0.0023	ND
trans-1,3-Dichloropropene	0.99	mg/kg	0.0023	ND
Trichloroethene	0.99	mg/kg	0.0023	ND
Trichlorofluoromethane	0.99	mg/kg	0.0023	ND
Vinyl chloride	0.99	mg/kg	0.0023	ND
Xylenes (Total)	0.99	mg/kg	0.0011	ND

Surrogate	Conc.	Spike	Low Limit	High Limit	Recovery	Flags
Toluene-d8	29.82	30	70	130	99	
Dibromofluoromethane	35.13	30	70	130	117	
Bromofluorobenzene	28.24	30	70	130	94	
1,2-Dichloroethane-d4	30.61	30	70	130	102	

Sample ID: SB11 | **Collection Date: 12/2/2015**
Lab#: AC88558-008 | **Receipt Date: 12/3/2015**
Matrix: Soil

% Solids SM2540G

Analyte	DF	Units	RL	Result
% Solids	1	percent		85

Gasoline range organics 8015(C6-C10)

Analyte	DF	Units	RL	Result
Gasoline Range Organics	82.9	mg/kg	24	ND

Surrogate	Conc.	Spike	Low Limit	High Limit	Recovery	Flags
1,4-Dichlorobenzene-d4	22.18	30	50	150	74	

Ignitability (EPA 1030)

Analyte	DF	Units	RL	Result
Burning Rate (mm/sec)	1			NA
Flame Propagation (POS/NEG)	1			NA
Ignitability Screen (POS/NEG)	1			NEG

Mercury (TCLP) 7470A

Analyte	DF	Units	RL	Result
Mercury	1	mg/l	0.00070	ND

PAH Compounds 8270

Analyte	DF	Units	RL	Result
2-Methylnaphthalene	1	mg/kg	0.039	ND
Acenaphthene	1	mg/kg	0.039	ND
Acenaphthylene	1	mg/kg	0.039	ND
Anthracene	1	mg/kg	0.039	ND
Benzo[a]anthracene	1	mg/kg	0.039	ND
Benzo[a]pyrene	1	mg/kg	0.039	ND
Benzo[b]fluoranthene	1	mg/kg	0.039	ND
Benzo[g,h,i]perylene	1	mg/kg	0.039	ND
Benzo[k]fluoranthene	1	mg/kg	0.039	ND
Chrysene	1	mg/kg	0.039	ND
Dibenzo[a,h]anthracene	1	mg/kg	0.039	ND
Fluoranthene	**1**	**mg/kg**	**0.039**	**0.040**
Fluorene	1	mg/kg	0.039	ND
Indeno[1,2,3-cd]pyrene	1	mg/kg	0.039	ND
Naphthalene	1	mg/kg	0.0098	ND
Phenanthrene	1	mg/kg	0.039	ND
Pyrene	**1**	**mg/kg**	**0.039**	**0.053**

Surrogate	Conc.	Spike	Low Limit	High Limit	Recovery	Flags
Terphenyl-d14	61.83	50	30	130	124	
Phenol-d5	81.91	100	30	130	82	
Nitrobenzene-d5	41.90	50	30	130	84	
2-Fluorophenol	78.69	100	30	130	79	
2-Fluorobiphenyl	44.59	50	30	130	89	
2,4,6-Tribromophenol	104.80	100	30	130	105	

Paint Filter Test 9095A

Analyte	DF	Units	RL	Result
Paint Filter Test	1			NEG

PCB 8082

Analyte	DF	Units	RL	Result
Aroclor (Total)	**1**	**mg/kg**	**0.029**	**0.11**
Aroclor-1016	1	mg/kg	0.029	ND
Aroclor-1221	1	mg/kg	0.029	ND
Aroclor-1232	1	mg/kg	0.029	ND
Aroclor-1242	1	mg/kg	0.029	ND
Aroclor-1248	1	mg/kg	0.029	ND
Aroclor-1254	**1**	**mg/kg**	**0.029**	**0.11**
Aroclor-1260	1	mg/kg	0.029	ND
Aroclor-1262	1	mg/kg	0.029	ND
Aroclor-1268	1	mg/kg	0.029	ND

Sample ID: SB11 | **Collection Date: 12/2/2015**
Lab#: AC88558-008 | **Receipt Date: 12/3/2015**
Matrix: Soil

Surrogate	Conc.	Spike	Low Limit	High Limit	Recovery	Flags
TCMX-Surrogate	85.29	100	30	150	85	
TCMX-Surrogate	76.50	100	30	150	76	
DCB-Surrogate	77.80	100	30	150	78	
DCB-Surrogate	66.50	100	30	150	66	

pH 9040C/9045D

Analyte	DF	Units	RL	Result
pH	1	ph		7.1

Reactive Cyanide

Analyte	DF	Units	RL	Result
Cyanide (Reactive)	1	mg/kg	0.50	ND

Reactive Sulfide

Analyte	DF	Units	RL	Result
Sulfide (Reactive)	1	mg/kg	100	ND

TCLP Metals 6010

Analyte	DF	Units	RL	Result
Arsenic	1	mg/l	0.10	ND
Barium	1	mg/l	0.25	ND
Cadmium	1	mg/l	0.050	ND
Chromium	1	mg/l	0.10	ND
Lead	1	mg/l	0.050	ND
Nickel	1	mg/l	0.10	ND
Selenium	1	mg/l	0.10	ND
Silver	1	mg/l	0.050	ND

Total PetroleumHydrocarbons8015B(C8-C40)

Analyte	DF	Units	RL	Result
Total Petroleum Hydrocarbons	1	mg/kg	71	ND

Volatile Organics (no search) 8260

Analyte	DF	Units	RL	Result
1,1,1-Trichloroethane	0.876	mg/kg	0.0021	ND
1,1,2,2-Tetrachloroethane	0.876	mg/kg	0.0021	ND
1,1,2-Trichloro-1,2,2-trifluoroethane	0.876	mg/kg	0.0021	ND
1,1,2-Trichloroethane	0.876	mg/kg	0.0021	ND
1,1-Dichloroethane	0.876	mg/kg	0.0021	ND
1,1-Dichloroethene	0.876	mg/kg	0.0021	ND
1,2,3-Trichlorobenzene	0.876	mg/kg	0.0021	ND
1,2,4-Trichlorobenzene	0.876	mg/kg	0.0021	ND
1,2-Dibromo-3-chloropropane	0.876	mg/kg	0.0021	ND
1,2-Dibromoethane	0.876	mg/kg	0.0021	ND
1,2-Dichlorobenzene	0.876	mg/kg	0.0021	ND
1,2-Dichloroethane	0.876	mg/kg	0.0010	ND
1,2-Dichloropropane	0.876	mg/kg	0.0021	ND
1,3-Dichlorobenzene	0.876	mg/kg	0.0021	ND
1,4-Dichlorobenzene	0.876	mg/kg	0.0021	ND
1,4-Dioxane	0.876	mg/kg	0.10	ND
2-Butanone	0.876	mg/kg	0.0021	ND
2-Hexanone	0.876	mg/kg	0.0021	ND
4-Methyl-2-pentanone	0.876	mg/kg	0.0021	ND
Acetone	0.876	mg/kg	0.010	ND
Benzene	0.876	mg/kg	0.0010	ND
Bromochloromethane	0.876	mg/kg	0.0021	ND
Bromodichloromethane	0.876	mg/kg	0.0021	ND
Bromoform	0.876	mg/kg	0.0021	ND
Bromomethane	0.876	mg/kg	0.0021	ND
Carbon disulfide	0.876	mg/kg	0.0021	ND
Carbon tetrachloride	0.876	mg/kg	0.0021	ND
Chlorobenzene	0.876	mg/kg	0.0021	ND
Chloroethane	0.876	mg/kg	0.0021	ND
Chloroform	0.876	mg/kg	0.0021	ND
Chloromethane	0.876	mg/kg	0.0021	ND
cis-1,2-Dichloroethene	0.876	mg/kg	0.0021	ND

HAZ-96

Sample ID: SB11
Lab#: AC88558-008
Matrix: Soil

Collection Date: 12/2/2015
Receipt Date: 12/3/2015

cis-1,3-Dichloropropene	0.876	mg/kg	0.0021	ND
Cyclohexane	0.876	mg/kg	0.0021	ND
Dibromochloromethane	0.876	mg/kg	0.0021	ND
Dichlorodifluoromethane	0.876	mg/kg	0.0021	ND
Ethylbenzene	0.876	mg/kg	0.0010	ND
Isopropylbenzene	0.876	mg/kg	0.0010	ND
m&p-Xylenes	0.876	mg/kg	0.0010	ND
Methyl Acetate	0.876	mg/kg	0.0021	ND
Methylcyclohexane	0.876	mg/kg	0.0021	ND
Methylene chloride	0.876	mg/kg	0.0021	ND
Methyl-t-butyl ether	0.876	mg/kg	0.0010	ND
o-Xylene	0.876	mg/kg	0.0010	ND
Styrene	0.876	mg/kg	0.0021	ND
Tetrachloroethene	0.876	mg/kg	0.0021	ND
Toluene	0.876	mg/kg	0.0010	ND
trans-1,2-Dichloroethene	0.876	mg/kg	0.0021	ND
trans-1,3-Dichloropropene	0.876	mg/kg	0.0021	ND
Trichloroethene	0.876	mg/kg	0.0021	ND
Trichlorofluoromethane	0.876	mg/kg	0.0021	ND
Vinyl chloride	0.876	mg/kg	0.0021	ND
Xylenes (Total)	0.876	mg/kg	0.0010	ND

Surrogate	Conc.	Spike	Low Limit	High Limit	Recovery	Flags
Toluene-d8	26.74	30	70	130	89	
Dibromofluoromethane	35.02	30	70	130	117	
Bromofluorobenzene	30.68	30	70	130	102	
1,2-Dichloroethane-d4	32.61	30	70	130	109	

Sample ID: SB12 | **Collection Date: 12/2/2015**
Lab#: AC88558-009 | **Receipt Date: 12/3/2015**
Matrix: Soil

% Solids SM2540G

Analyte	DF	Units	RL	Result
% Solids	1	percent		87

Gasoline range organics 8015(C6-C10)

Analyte	DF	Units	RL	Result
Gasoline Range Organics	84.7	mg/kg	24	ND

Surrogate	Conc.	Spike	Low Limit	High Limit	Recovery	Flags
1,4-Dichlorobenzene-d4	19.82	30	50	150	66	

Ignitability (EPA 1030)

Analyte	DF	Units	RL	Result
Burning Rate (mm/sec)	1			NA
Flame Propagation (POS/NEG)	1			NA
Ignitability Screen (POS/NEG)	1			NEG

Mercury (TCLP) 7470A

Analyte	DF	Units	RL	Result
Mercury	1	mg/l	0.00070	ND

PAH Compounds 8270

Analyte	DF	Units	RL	Result
2-Methylnaphthalene	1	mg/kg	0.038	ND
Acenaphthene	1	mg/kg	0.038	ND
Acenaphthylene	1	mg/kg	0.038	ND
Anthracene	1	mg/kg	0.038	ND
Benzo[a]anthracene	1	mg/kg	0.038	ND
Benzo[a]pyrene	1	mg/kg	0.038	ND
Benzo[b]fluoranthene	1	mg/kg	0.038	ND
Benzo[g,h,i]perylene	1	mg/kg	0.038	ND
Benzo[k]fluoranthene	1	mg/kg	0.038	ND
Chrysene	1	mg/kg	0.038	ND
Dibenzo[a,h]anthracene	1	mg/kg	0.038	ND
Fluoranthene	1	mg/kg	0.038	ND
Fluorene	1	mg/kg	0.038	ND
Indeno[1,2,3-cd]pyrene	1	mg/kg	0.038	ND
Naphthalene	1	mg/kg	0.0096	ND
Phenanthrene	1	mg/kg	0.038	ND
Pyrene	1	mg/kg	0.038	ND

Surrogate	Conc.	Spike	Low Limit	High Limit	Recovery	Flags
Terphenyl-d14	45.97	50	30	130	92	
Phenol-d5	65.03	100	30	130	65	
Nitrobenzene-d5	29.68	50	30	130	59	
2-Fluorophenol	60.01	100	30	130	60	
2-Fluorobiphenyl	34.43	50	30	130	69	
2,4,6-Tribromophenol	96.30	100	30	130	96	

Paint Filter Test 9095A

Analyte	DF	Units	RL	Result
Paint Filter Test	1			NEG

PCB 8082

Analyte	DF	Units	RL	Result
Aroclor (Total)	1	mg/kg	0.029	ND
Aroclor-1016	1	mg/kg	0.029	ND
Aroclor-1221	1	mg/kg	0.029	ND
Aroclor-1232	1	mg/kg	0.029	ND
Aroclor-1242	1	mg/kg	0.029	ND
Aroclor-1248	1	mg/kg	0.029	ND
Aroclor-1254	1	mg/kg	0.029	ND
Aroclor-1260	1	mg/kg	0.029	ND
Aroclor-1262	1	mg/kg	0.029	ND
Aroclor-1268	1	mg/kg	0.029	ND

Sample ID: SB12 **Collection Date: 12/2/2015**
Lab#: AC88558-009 **Receipt Date: 12/3/2015**
Matrix: Soil

Surrogate	Conc.	Spike	Low Limit	High Limit	Recovery	Flags
TCMX-Surrogate	84.86	100	30	150	85	
TCMX-Surrogate	76.70	100	30	150	77	
DCB-Surrogate	77.33	100	30	150	77	
DCB-Surrogate	66.68	100	30	150	67	

pH 9040C/9045D

Analyte	DF	Units	RL	Result
pH	1	ph		12

Reactive Cyanide

Analyte	DF	Units	RL	Result
Cyanide (Reactive)	1	mg/kg	0.50	ND

Reactive Sulfide

Analyte	DF	Units	RL	Result
Sulfide (Reactive)	1	mg/kg	100	ND

TCLP Metals 6010

Analyte	DF	Units	RL	Result
Arsenic	1	mg/l	0.10	ND
Barium	**1**	**mg/l**	**0.25**	**0.31**
Cadmium	1	mg/l	0.050	ND
Chromium	1	mg/l	0.10	ND
Lead	1	mg/l	0.050	ND
Nickel	1	mg/l	0.10	ND
Selenium	1	mg/l	0.10	ND
Silver	1	mg/l	0.050	ND

Total PetroleumHydrocarbons8015B(C8-C40)

Analyte	DF	Units	RL	Result
Total Petroleum Hydrocarbons	1	mg/kg	69	ND

Volatile Organics (no search) 8260

Analyte	DF	Units	RL	Result
1,1,1-Trichloroethane	0.945	mg/kg	0.0022	ND
1,1,2,2-Tetrachloroethane	0.945	mg/kg	0.0022	ND
1,1,2-Trichloro-1,2,2-trifluoroethane	0.945	mg/kg	0.0022	ND
1,1,2-Trichloroethane	0.945	mg/kg	0.0022	ND
1,1-Dichloroethane	0.945	mg/kg	0.0022	ND
1,1-Dichloroethene	0.945	mg/kg	0.0022	ND
1,2,3-Trichlorobenzene	0.945	mg/kg	0.0022	ND
1,2,4-Trichlorobenzene	0.945	mg/kg	0.0022	ND
1,2-Dibromo-3-chloropropane	0.945	mg/kg	0.0022	ND
1,2-Dibromoethane	0.945	mg/kg	0.0022	ND
1,2-Dichlorobenzene	0.945	mg/kg	0.0022	ND
1,2-Dichloroethane	0.945	mg/kg	0.0011	ND
1,2-Dichloropropane	0.945	mg/kg	0.0022	ND
1,3-Dichlorobenzene	0.945	mg/kg	0.0022	ND
1,4-Dichlorobenzene	0.945	mg/kg	0.0022	ND
1,4-Dioxane	0.945	mg/kg	0.11	ND
2-Butanone	0.945	mg/kg	0.0022	ND
2-Hexanone	0.945	mg/kg	0.0022	ND
4-Methyl-2-pentanone	0.945	mg/kg	0.0022	ND
Acetone	0.945	mg/kg	0.011	ND
Benzene	0.945	mg/kg	0.0011	ND
Bromochloromethane	0.945	mg/kg	0.0022	ND
Bromodichloromethane	0.945	mg/kg	0.0022	ND
Bromoform	0.945	mg/kg	0.0022	ND
Bromomethane	0.945	mg/kg	0.0022	ND
Carbon disulfide	0.945	mg/kg	0.0022	ND
Carbon tetrachloride	0.945	mg/kg	0.0022	ND
Chlorobenzene	0.945	mg/kg	0.0022	ND
Chloroethane	0.945	mg/kg	0.0022	ND
Chloroform	0.945	mg/kg	0.0022	ND
Chloromethane	0.945	mg/kg	0.0022	ND
cis-1,2-Dichloroethene	0.945	mg/kg	0.0022	ND

Sample ID: SB12 **Collection Date: 12/2/2015**
Lab#: AC88558-009 **Receipt Date: 12/3/2015**
Matrix: Soil

cis-1,3-Dichloropropene	0.945	mg/kg	0.0022	ND
Cyclohexane	0.945	mg/kg	0.0022	ND
Dibromochloromethane	0.945	mg/kg	0.0022	ND
Dichlorodifluoromethane	0.945	mg/kg	0.0022	ND
Ethylbenzene	0.945	mg/kg	0.0011	ND
Isopropylbenzene	0.945	mg/kg	0.0011	ND
m&p-Xylenes	0.945	mg/kg	0.0011	ND
Methyl Acetate	0.945	mg/kg	0.0022	ND
Methylcyclohexane	0.945	mg/kg	0.0022	ND
Methylene chloride	0.945	mg/kg	0.0022	ND
Methyl-t-butyl ether	0.945	mg/kg	0.0011	ND
o-Xylene	0.945	mg/kg	0.0011	ND
Styrene	0.945	mg/kg	0.0022	ND
Tetrachloroethene	0.945	mg/kg	0.0022	ND
Toluene	0.945	mg/kg	0.0011	ND
trans-1,2-Dichloroethene	0.945	mg/kg	0.0022	ND
trans-1,3-Dichloropropene	0.945	mg/kg	0.0022	ND
Trichloroethene	0.945	mg/kg	0.0022	ND
Trichlorofluoromethane	0.945	mg/kg	0.0022	ND
Vinyl chloride	0.945	mg/kg	0.0022	ND
Xylenes (Total)	0.945	mg/kg	0.0011	ND

Surrogate	Conc.	Spike	Low Limit	High Limit	Recovery	Flags
Toluene-d8	28.98	30	70	130	97	
Dibromofluoromethane	35.12	30	70	130	117	
Bromofluorobenzene	28.71	30	70	130	96	
1,2-Dichloroethane-d4	32.96	30	70	130	110	

Hampton-Clarke, Inc. (WBE/DBE/SBE)
175 Ro[redacted] West and 2 Madison Road, Fairfield, New Jersey 07004
Ph: 80[redacted]92 | 973-244-9770 Fax: 973-244-9787 | 973-439-1458
Service Center: 137-D Gaither Drive, Mount Laurel, New Jersey 08054
Ph (Service Center): 856-780-6057 Fax: 856-780-6056

Hampton-Clarke

[redacted]N OF CUSTODY RECORD

A Women-Owned, Disadvantaged, Small Business Enterprise

NELAC/NJ #07071 | PA #68-00463 | NY #11408 | CT #PH-0671 | KY #90124 | DE HSCA Approved

Project # (Lab Use Only): 5120327

Page 1 [redacted] 2

Customer Information

1a) Customer: LOUIS BERGER
Address: 48 WALL ST, 16th FL NEW YORK, NY 10005
1b) Email/Cell/Fax/Ph:
1c) Send Invoice to: BRENNA GRIBBLE
1d) Send Report to: —"—

Project Information

2a) Project: ASTORIA TRUNK PHASE
2b) Project Mgr: FAMEEDA ALI
2c) Project Location (City/State): QUEENS, NY
2d) Quote/PO # (If Applicable):

3) Reporting Requirements (Please Circle)

Turnaround	Report Type	Electronic Deliv.
When Available:	Data Summary	Hazsite/CSV
1 Business Day (100%)*	Results + QC (Waste)	EnviroData
2 Business Days (75%)*	NJ Reduced	Excel - NJ Regulatory
3 Business Days (50%)*	NY Reduced	Excel - NY Regulatory
4 Business Days (35%)*	PA Reduced	Excel - PA Regulatory
5 Business Days (25%)	Full / Category B	EQuIS (specify below):
10 Business Days (Stand.)	Category A	4-File/EZ/NYS/Reg. 2 or 5
Other:	Electronic (PDF)	Other:

* Expedited TAT Not Always Available. Please Check with Lab.

FOR LAB USE ONLY ↓

Batch # AC88558

Matrix Codes: DW - Drinking Water; GW - Ground Water; WW - Waste Water; S - Soil; SL - Sludge; OL - Oil; A - Air; OT - Other (please specify under item 9, Comments)

7) Analysis (specify methods & parameter lists) — Check If Contingent

8) # of Bottles — Check If Contingent

Lab Sample #	4) Customer Sample ID	5) Matrix	6) Sample Date	6) Sample Time	Composite (C)	Grab (G)	TCL VOC 8260C	PAH 8270C	TPH-DRO/GRO 8015B	PCB 8082A/608	TCLP Metals 1311/6010B	RCRA Characteristics	ignitability	reac, corros. 9012B/9034/1030/1010A/9045C		Paint filter 9095B	None	MeOH	En Core	NaOH	HCl	H2SO4	HNO3	Other:	9) Comments
-001	SB03	S	12/2/15	1530	X	X	X	X	X	X	X	X	X	X	X	X	X	3							
-002	SB04			1500																					
-003	SB05			1415																					
-004	SB07			1330																					
-005	SB08			1215																					
-006	SB09			1145																					
-007	SB10			1100																					
-008	SB11			1030																					
-009	SB12			1000																					

HA2-101

10) Relinquished by / Accepted by

Relinquished by:	Accepted by:	Date	Time
[signature]	[signature]	12/2/15	1557
[signature]	[signature]	12/3/15	1749

Additional Notes

Comments, Notes, Special Requirements, HAZARDS

Indicate if low-level methods required to meet current groundwater standards (SPLP for soil):
- [ ] BN or BNA (8270D SIM)
- [ ] VOC (8260C SIM or 8011)
- [ ] SPLP (BN, BNA, Metals)

Check if applicable:
- [ ] Project-Specific Reporting Limits
- [ ] High Contaminant Concentrations
- [ ] NJ LSRP Project (also check boxes above/right)

For NNJ LSRP projects, indicate which standards need to be met:
- [ ] NJDEP GWQS
- [ ] NJDEP SRS
- [ ] NJDEP SPLP
- [ ] Other (specify):

Cooler Temperature: 3.3 2.7 2.1

11) Sampler (print name): J. Lacamble Date: 12/2/15

Please note NUMBERED Items. If not completed your analytical work may be delayed. A fee of $5/sample will be assessed for storage should sample not be activated for any analysis.

Hampton-Clarke Report Of Analysis

Client: Louis Berger & Associates
Project: Astoria Trunk Ph II

HC Project #: 5120701

Sample ID: SB28
Lab#: AC88606-001
Matrix: Soil

Collection Date: 12/4/2015
Receipt Date: 12/6/2015

% Solids SM2540G

Analyte	DF	Units	RL	Result
% Solids	1	percent		95

Ignitability (EPA 1030)

Analyte	DF	Units	RL	Result
Burning Rate (mm/sec)	1			NA
Flame Propagation (POS/NEG)	1			NA
Ignitability Screen (POS/NEG)	1			NEG

Mercury (TCLP) 7470A

Analyte	DF	Units	RL	Result
Mercury	1	mg/l	0.00070	ND

PAH Compounds 8270

Analyte	DF	Units	RL	Result
2-Methylnaphthalene	1	mg/kg	0.035	ND
Acenaphthene	1	mg/kg	0.035	ND
Acenaphthylene	1	mg/kg	0.035	ND
Anthracene	1	mg/kg	0.035	ND
Benzo[a]anthracene	1	mg/kg	0.035	ND
Benzo[a]pyrene	1	mg/kg	0.035	ND
Benzo[b]fluoranthene	**1**	**mg/kg**	**0.035**	**0.038**
Benzo[g,h,i]perylene	1	mg/kg	0.035	ND
Benzo[k]fluoranthene	1	mg/kg	0.035	ND
Chrysene	1	mg/kg	0.035	ND
Dibenzo[a,h]anthracene	1	mg/kg	0.035	ND
Fluoranthene	**1**	**mg/kg**	**0.035**	**0.036**
Fluorene	1	mg/kg	0.035	ND
Indeno[1,2,3-cd]pyrene	1	mg/kg	0.035	ND
Naphthalene	1	mg/kg	0.0088	ND
Phenanthrene	1	mg/kg	0.035	ND
Pyrene	**1**	**mg/kg**	**0.035**	**0.040**

Surrogate	Conc.	Spike	Low Limit	High Limit	Recovery	Flags
Terphenyl-d14	49.93	50	30	130	100	
Phenol-d5	78.70	100	30	130	79	
Nitrobenzene-d5	42.09	50	30	130	84	
2-Fluorophenol	77.24	100	30	130	77	
2-Fluorobiphenyl	48.18	50	30	130	96	
2,4,6-Tribromophenol	115.45	100	30	130	115	

Paint Filter Test 9095A

Analyte	DF	Units	RL	Result
Paint Filter Test	1			NEG

PCB 8082

Analyte	DF	Units	RL	Result
Aroclor (Total)	1	mg/kg	0.026	ND
Aroclor-1016	1	mg/kg	0.026	ND
Aroclor-1221	1	mg/kg	0.026	ND
Aroclor-1232	1	mg/kg	0.026	ND
Aroclor-1242	1	mg/kg	0.026	ND
Aroclor-1248	1	mg/kg	0.026	ND
Aroclor-1254	1	mg/kg	0.026	ND
Aroclor-1260	1	mg/kg	0.026	ND
Aroclor-1262	1	mg/kg	0.026	ND
Aroclor-1268	1	mg/kg	0.026	ND

HAZ-102

Sample ID: SB28 **Collection Date: 12/4/2015**
Lab#: AC88606-001 **Receipt Date: 12/6/2015**
Matrix: Soil

Surrogate	Conc.	Spike	Low Limit	High Limit	Recovery	Flags
TCMX-Surrogate	71.47	100	30	150	71	
TCMX-Surrogate	68.28	100	30	150	68	
DCB-Surrogate	66.31	100	30	150	66	
DCB-Surrogate	57.46	100	30	150	57	

pH 9040C/9045D

Analyte	DF	Units	RL	Result
pH	1	ph		8.3

Reactive Cyanide

Analyte	DF	Units	RL	Result
Cyanide (Reactive)	1	mg/kg	0.50	ND

Reactive Sulfide

Analyte	DF	Units	RL	Result
Sulfide (Reactive)	1	mg/kg	100	ND

TCLP Metals 6010

Analyte	DF	Units	RL	Result
Arsenic	1	mg/l	0.10	ND
Barium	1	mg/l	0.25	ND
Cadmium	1	mg/l	0.050	ND
Chromium	1	mg/l	0.10	ND
Lead	1	mg/l	0.050	ND
Nickel	1	mg/l	0.10	ND
Selenium	1	mg/l	0.10	ND
Silver	1	mg/l	0.050	ND

Total PetroleumHydrocarbons8015B(C8-C40)

Analyte	DF	Units	RL	Result
Total Petroleum Hydrocarbons	1	mg/kg	63	ND

Volatile Organics (no search) 8260

Analyte	DF	Units	RL	Result
1,1,1-Trichloroethane	0.998	mg/kg	0.0021	ND
1,1,2,2-Tetrachloroethane	0.998	mg/kg	0.0021	ND
1,1,2-Trichloro-1,2,2-trifluoroethane	0.998	mg/kg	0.0021	ND
1,1,2-Trichloroethane	0.998	mg/kg	0.0021	ND
1,1-Dichloroethane	0.998	mg/kg	0.0021	ND
1,1-Dichloroethene	0.998	mg/kg	0.0021	ND
1,2,3-Trichlorobenzene	0.998	mg/kg	0.0021	ND
1,2,4-Trichlorobenzene	0.998	mg/kg	0.0021	ND
1,2-Dibromo-3-chloropropane	0.998	mg/kg	0.0021	ND
1,2-Dibromoethane	0.998	mg/kg	0.0021	ND
1,2-Dichlorobenzene	0.998	mg/kg	0.0021	ND
1,2-Dichloroethane	0.998	mg/kg	0.0011	ND
1,2-Dichloropropane	0.998	mg/kg	0.0021	ND
1,3-Dichlorobenzene	0.998	mg/kg	0.0021	ND
1,4-Dichlorobenzene	0.998	mg/kg	0.0021	ND
1,4-Dioxane	0.998	mg/kg	0.11	ND
2-Butanone	0.998	mg/kg	0.0021	ND
2-Hexanone	0.998	mg/kg	0.0021	ND
4-Methyl-2-pentanone	0.998	mg/kg	0.0021	ND
Acetone	0.998	mg/kg	0.011	ND
Benzene	0.998	mg/kg	0.0011	ND
Bromochloromethane	0.998	mg/kg	0.0021	ND
Bromodichloromethane	0.998	mg/kg	0.0021	ND
Bromoform	0.998	mg/kg	0.0021	ND
Bromomethane	0.998	mg/kg	0.0021	ND
Carbon disulfide	0.998	mg/kg	0.0021	ND
Carbon tetrachloride	0.998	mg/kg	0.0021	ND
Chlorobenzene	0.998	mg/kg	0.0021	ND
Chloroethane	0.998	mg/kg	0.0021	ND
Chloroform	0.998	mg/kg	0.0021	ND
Chloromethane	0.998	mg/kg	0.0021	ND
cis-1,2-Dichloroethene	0.998	mg/kg	0.0021	ND

Sample ID: SB28 **Collection Date: 12/4/2015**
Lab#: AC88606-001 **Receipt Date: 12/6/2015**
Matrix: Soil

cis-1,3-Dichloropropene	0.998	mg/kg	0.0021	ND
Cyclohexane	0.998	mg/kg	0.0021	ND
Dibromochloromethane	0.998	mg/kg	0.0021	ND
Dichlorodifluoromethane	0.998	mg/kg	0.0021	ND
Ethylbenzene	0.998	mg/kg	0.0011	ND
Isopropylbenzene	0.998	mg/kg	0.0011	ND
m&p-Xylenes	0.998	mg/kg	0.0011	ND
Methyl Acetate	0.998	mg/kg	0.0021	ND
Methylcyclohexane	0.998	mg/kg	0.0021	ND
Methylene chloride	0.998	mg/kg	0.0021	ND
Methyl-t-butyl ether	0.998	mg/kg	0.0011	ND
o-Xylene	0.998	mg/kg	0.0011	ND
Styrene	0.998	mg/kg	0.0021	ND
Tetrachloroethene	0.998	mg/kg	0.0021	ND
Toluene	0.998	mg/kg	0.0011	ND
trans-1,2-Dichloroethene	0.998	mg/kg	0.0021	ND
trans-1,3-Dichloropropene	0.998	mg/kg	0.0021	ND
Trichloroethene	0.998	mg/kg	0.0021	ND
Trichlorofluoromethane	0.998	mg/kg	0.0021	ND
Vinyl chloride	0.998	mg/kg	0.0021	ND
Xylenes (Total)	0.998	mg/kg	0.0011	ND

Surrogate	Conc.	Spike	Low Limit	High Limit	Recovery	Flags
Toluene-d8	29.04	30	70	130	97	
Dibromofluoromethane	33.22	30	70	130	111	
Bromofluorobenzene	27.71	30	70	130	92	
1,2-Dichloroethane-d4	30.87	30	70	130	103	

HA2-104

Sample ID: SB29 | **Collection Date: 12/4/2015**
Lab#: AC88606-002 | **Receipt Date: 12/6/2015**
Matrix: Soil

% Solids SM2540G

Analyte	DF	Units	RL	Result
% Solids	1	percent		93

Ignitability (EPA 1030)

Analyte	DF	Units	RL	Result
Burning Rate (mm/sec)	1			NA
Flame Propagation (POS/NEG)	1			NA
Ignitability Screen (POS/NEG)	1			NEG

Mercury (TCLP) 7470A

Analyte	DF	Units	RL	Result
Mercury	1	mg/l	0.00070	ND

PAH Compounds 8270

Analyte	DF	Units	RL	Result
2-Methylnaphthalene	1	mg/kg	0.036	ND
Acenaphthene	1	mg/kg	0.036	ND
Acenaphthylene	1	mg/kg	0.036	ND
Anthracene	1	mg/kg	0.036	ND
Benzo[a]anthracene	1	mg/kg	0.036	ND
Benzo[a]pyrene	1	mg/kg	0.036	ND
Benzo[b]fluoranthene	**1**	**mg/kg**	**0.036**	**0.052**
Benzo[g,h,i]perylene	1	mg/kg	0.036	ND
Benzo[k]fluoranthene	1	mg/kg	0.036	ND
Chrysene	1	mg/kg	0.036	ND
Dibenzo[a,h]anthracene	1	mg/kg	0.036	ND
Fluoranthene	1	mg/kg	0.036	ND
Fluorene	1	mg/kg	0.036	ND
Indeno[1,2,3-cd]pyrene	1	mg/kg	0.036	ND
Naphthalene	1	mg/kg	0.0090	ND
Phenanthrene	1	mg/kg	0.036	ND
Pyrene	**1**	**mg/kg**	**0.036**	**0.038**

Surrogate	Conc.	Spike	Low Limit	High Limit	Recovery	Flags
Terphenyl-d14	51.03	50	30	130	102	
Phenol-d5	74.55	100	30	130	75	
Nitrobenzene-d5	40.21	50	30	130	80	
2-Fluorophenol	73.08	100	30	130	73	
2-Fluorobiphenyl	42.59	50	30	130	85	
2,4,6-Tribromophenol	84.59	100	30	130	85	

Paint Filter Test 9095A

Analyte	DF	Units	RL	Result
Paint Filter Test	1			NEG

PCB 8082

Analyte	DF	Units	RL	Result
Aroclor (Total)	1	mg/kg	0.027	ND
Aroclor-1016	1	mg/kg	0.027	ND
Aroclor-1221	1	mg/kg	0.027	ND
Aroclor-1232	1	mg/kg	0.027	ND
Aroclor-1242	1	mg/kg	0.027	ND
Aroclor-1248	1	mg/kg	0.027	ND
Aroclor-1254	1	mg/kg	0.027	ND
Aroclor-1260	1	mg/kg	0.027	ND
Aroclor-1262	1	mg/kg	0.027	ND
Aroclor-1268	1	mg/kg	0.027	ND

Surrogate	Conc.	Spike	Low Limit	High Limit	Recovery	Flags
TCMX-Surrogate	134.33	100	30	150	134	
TCMX-Surrogate	125.08	100	30	150	125	
DCB-Surrogate	125.28	100	30	150	125	
DCB-Surrogate	101.56	100	30	150	102	

pH 9040C/9045D

Analyte	DF	Units	RL	Result
pH	1	ph		11

HA2-105

Sample ID: SB29 | **Collection Date: 12/4/2015**
Lab#: AC88606-002 | **Receipt Date: 12/6/2015**
Matrix: Soil

Reactive Cyanide

Analyte	DF	Units	RL	Result
Cyanide (Reactive)	1	mg/kg	0.50	ND

Reactive Sulfide

Analyte	DF	Units	RL	Result
Sulfide (Reactive)	1	mg/kg	100	ND

TCLP Metals 6010

Analyte	DF	Units	RL	Result
Arsenic	1	mg/l	0.10	ND
Barium	1	mg/l	0.25	ND
Cadmium	1	mg/l	0.050	ND
Chromium	1	mg/l	0.10	ND
Lead	1	mg/l	0.050	ND
Nickel	1	mg/l	0.10	ND
Selenium	1	mg/l	0.10	ND
Silver	1	mg/l	0.050	ND

Total PetroleumHydrocarbons8015B(C8-C40)

Analyte	DF	Units	RL	Result
Total Petroleum Hydrocarbons	1	mg/kg	65	ND

Volatile Organics (no search) 8260

Analyte	DF	Units	RL	Result
1,1,1-Trichloroethane	0.94	mg/kg	0.0020	ND
1,1,2,2-Tetrachloroethane	0.94	mg/kg	0.0020	ND
1,1,2-Trichloro-1,2,2-trifluoroethane	0.94	mg/kg	0.0020	ND
1,1,2-Trichloroethane	0.94	mg/kg	0.0020	ND
1,1-Dichloroethane	0.94	mg/kg	0.0020	ND
1,1-Dichloroethene	0.94	mg/kg	0.0020	ND
1,2,3-Trichlorobenzene	0.94	mg/kg	0.0020	ND
1,2,4-Trichlorobenzene	0.94	mg/kg	0.0020	ND
1,2-Dibromo-3-chloropropane	0.94	mg/kg	0.0020	ND
1,2-Dibromoethane	0.94	mg/kg	0.0020	ND
1,2-Dichlorobenzene	0.94	mg/kg	0.0020	ND
1,2-Dichloroethane	0.94	mg/kg	0.0010	ND
1,2-Dichloropropane	0.94	mg/kg	0.0020	ND
1,3-Dichlorobenzene	0.94	mg/kg	0.0020	ND
1,4-Dichlorobenzene	0.94	mg/kg	0.0020	ND
1,4-Dioxane	0.94	mg/kg	0.10	ND
2-Butanone	0.94	mg/kg	0.0020	ND
2-Hexanone	0.94	mg/kg	0.0020	ND
4-Methyl-2-pentanone	0.94	mg/kg	0.0020	ND
Acetone	0.94	mg/kg	0.010	ND
Benzene	0.94	mg/kg	0.0010	ND
Bromochloromethane	0.94	mg/kg	0.0020	ND
Bromodichloromethane	0.94	mg/kg	0.0020	ND
Bromoform	0.94	mg/kg	0.0020	ND
Bromomethane	0.94	mg/kg	0.0020	ND
Carbon disulfide	0.94	mg/kg	0.0020	ND
Carbon tetrachloride	0.94	mg/kg	0.0020	ND
Chlorobenzene	0.94	mg/kg	0.0020	ND
Chloroethane	0.94	mg/kg	0.0020	ND
Chloroform	0.94	mg/kg	0.0020	ND
Chloromethane	0.94	mg/kg	0.0020	ND
cis-1,2-Dichloroethene	0.94	mg/kg	0.0020	ND
cis-1,3-Dichloropropene	0.94	mg/kg	0.0020	ND
Cyclohexane	0.94	mg/kg	0.0020	ND
Dibromochloromethane	0.94	mg/kg	0.0020	ND
Dichlorodifluoromethane	0.94	mg/kg	0.0020	ND
Ethylbenzene	0.94	mg/kg	0.0010	ND
Isopropylbenzene	0.94	mg/kg	0.0010	ND
m&p-Xylenes	0.94	mg/kg	0.0010	ND
Methyl Acetate	0.94	mg/kg	0.0020	ND
Methylcyclohexane	0.94	mg/kg	0.0020	ND
Methylene chloride	0.94	mg/kg	0.0020	ND

Sample ID: SB29
Lab#: AC88606-002
Matrix: Soil

Collection Date: 12/4/2015
Receipt Date: 12/6/2015

Methyl-t-butyl ether	0.94	mg/kg	0.0010	ND
o-Xylene	0.94	mg/kg	0.0010	ND
Styrene	0.94	mg/kg	0.0020	ND
Tetrachloroethene	0.94	mg/kg	0.0020	ND
Toluene	0.94	mg/kg	0.0010	ND
trans-1,2-Dichloroethene	0.94	mg/kg	0.0020	ND
trans-1,3-Dichloropropene	0.94	mg/kg	0.0020	ND
Trichloroethene	0.94	mg/kg	0.0020	ND
Trichlorofluoromethane	0.94	mg/kg	0.0020	ND
Vinyl chloride	0.94	mg/kg	0.0020	ND
Xylenes (Total)	0.94	mg/kg	0.0010	ND

Surrogate	Conc.	Spike	Low Limit	High Limit	Recovery	Flags
Toluene-d8	28.14	30	70	130	94	
Dibromofluoromethane	34.77	30	70	130	116	
Bromofluorobenzene	26.87	30	70	130	90	
1,2-Dichloroethane-d4	34.06	30	70	130	114	

Sample ID: SB30
Lab#: AC88606-003
Matrix: Soil

Collection Date: 12/4/2015
Receipt Date: 12/6/2015

% Solids SM2540G

Analyte	DF	Units	RL	Result
% Solids	1	percent		97

Ignitability (EPA 1030)

Analyte	DF	Units	RL	Result
Burning Rate (mm/sec)	1			NA
Flame Propagation (POS/NEG)	1			NA
Ignitability Screen (POS/NEG)	1			NEG

Mercury (TCLP) 7470A

Analyte	DF	Units	RL	Result
Mercury	1	mg/l	0.00070	ND

PAH Compounds 8270

Analyte	DF	Units	RL	Result
2-Methylnaphthalene	1	mg/kg	0.034	0.087
Acenaphthene	1	mg/kg	0.034	0.074
Acenaphthylene	1	mg/kg	0.034	ND
Anthracene	1	mg/kg	0.034	0.20
Benzo[a]anthracene	1	mg/kg	0.034	0.30
Benzo[a]pyrene	1	mg/kg	0.034	0.22
Benzo[b]fluoranthene	1	mg/kg	0.034	0.28
Benzo[g,h,i]perylene	1	mg/kg	0.034	0.16
Benzo[k]fluoranthene	1	mg/kg	0.034	0.10
Chrysene	1	mg/kg	0.034	0.27
Dibenzo[a,h]anthracene	1	mg/kg	0.034	0.042
Fluoranthene	1	mg/kg	0.034	0.55
Fluorene	1	mg/kg	0.034	0.098
Indeno[1,2,3-cd]pyrene	1	mg/kg	0.034	0.13
Naphthalene	1	mg/kg	0.0086	0.073
Phenanthrene	1	mg/kg	0.034	0.74
Pyrene	1	mg/kg	0.034	0.55

Surrogate	Conc.	Spike	Low Limit	High Limit	Recovery	Flags
Terphenyl-d14	51.00	50	30	130	102	
Phenol-d5	76.90	100	30	130	77	
Nitrobenzene-d5	45.20	50	30	130	90	
2-Fluorophenol	64.91	100	30	130	65	
2-Fluorobiphenyl	47.22	50	30	130	94	
2,4,6-Tribromophenol	21.10	100	30	130	21	

Paint Filter Test 9095A

Analyte	DF	Units	RL	Result
Paint Filter Test	1			NEG

PCB 8082

Analyte	DF	Units	RL	Result
Aroclor (Total)	1	mg/kg	0.026	ND
Aroclor-1016	1	mg/kg	0.026	ND
Aroclor-1221	1	mg/kg	0.026	ND
Aroclor-1232	1	mg/kg	0.026	ND
Aroclor-1242	1	mg/kg	0.026	ND
Aroclor-1248	1	mg/kg	0.026	ND
Aroclor-1254	1	mg/kg	0.026	ND
Aroclor-1260	1	mg/kg	0.026	ND
Aroclor-1262	1	mg/kg	0.026	ND
Aroclor-1268	1	mg/kg	0.026	ND

Surrogate	Conc.	Spike	Low Limit	High Limit	Recovery	Flags
TCMX-Surrogate	112.45	100	30	150	112	
TCMX-Surrogate	100.02	100	30	150	100	
DCB-Surrogate	104.96	100	30	150	105	
DCB-Surrogate	87.96	100	30	150	88	

pH 9040C/9045D

Analyte	DF	Units	RL	Result
pH	1	ph		12

Sample ID: SB30 | **Collection Date: 12/4/2015**
Lab#: AC88606-003 | **Receipt Date: 12/6/2015**
Matrix: Soil

Reactive Cyanide

Analyte	DF	Units	RL	Result
Cyanide (Reactive)	1	mg/kg	0.50	ND

Reactive Sulfide

Analyte	DF	Units	RL	Result
Sulfide (Reactive)	1	mg/kg	100	ND

TCLP Metals 6010

Analyte	DF	Units	RL	Result
Arsenic	1	mg/l	0.10	ND
Barium	1	mg/l	0.25	ND
Cadmium	1	mg/l	0.050	ND
Chromium	1	mg/l	0.10	ND
Lead	1	mg/l	0.050	ND
Nickel	1	mg/l	0.10	ND
Selenium	1	mg/l	0.10	ND
Silver	1	mg/l	0.050	ND

Total PetroleumHydrocarbons8015B(C8-C40)

Analyte	DF	Units	RL	Result
Total Petroleum Hydrocarbons	**1**	**mg/kg**	**62**	**91**

Volatile Organics (no search) 8260

Analyte	DF	Units	RL	Result
1,1,1-Trichloroethane	1	mg/kg	0.0021	ND
1,1,2,2-Tetrachloroethane	1	mg/kg	0.0021	ND
1,1,2-Trichloro-1,2,2-trifluoroethane	1	mg/kg	0.0021	ND
1,1,2-Trichloroethane	1	mg/kg	0.0021	ND
1,1-Dichloroethane	1	mg/kg	0.0021	ND
1,1-Dichloroethene	1	mg/kg	0.0021	ND
1,2,3-Trichlorobenzene	1	mg/kg	0.0021	ND
1,2,4-Trichlorobenzene	1	mg/kg	0.0021	ND
1,2-Dibromo-3-chloropropane	1	mg/kg	0.0021	ND
1,2-Dibromoethane	1	mg/kg	0.0021	ND
1,2-Dichlorobenzene	1	mg/kg	0.0021	ND
1,2-Dichloroethane	1	mg/kg	0.0010	ND
1,2-Dichloropropane	1	mg/kg	0.0021	ND
1,3-Dichlorobenzene	1	mg/kg	0.0021	ND
1,4-Dichlorobenzene	1	mg/kg	0.0021	ND
1,4-Dioxane	1	mg/kg	0.10	ND
2-Butanone	1	mg/kg	0.0021	ND
2-Hexanone	1	mg/kg	0.0021	ND
4-Methyl-2-pentanone	1	mg/kg	0.0021	ND
Acetone	1	mg/kg	0.010	ND
Benzene	1	mg/kg	0.0010	ND
Bromochloromethane	1	mg/kg	0.0021	ND
Bromodichloromethane	1	mg/kg	0.0021	ND
Bromoform	1	mg/kg	0.0021	ND
Bromomethane	1	mg/kg	0.0021	ND
Carbon disulfide	1	mg/kg	0.0021	ND
Carbon tetrachloride	1	mg/kg	0.0021	ND
Chlorobenzene	1	mg/kg	0.0021	ND
Chloroethane	1	mg/kg	0.0021	ND
Chloroform	1	mg/kg	0.0021	ND
Chloromethane	1	mg/kg	0.0021	ND
cis-1,2-Dichloroethene	1	mg/kg	0.0021	ND
cis-1,3-Dichloropropene	1	mg/kg	0.0021	ND
Cyclohexane	1	mg/kg	0.0021	ND
Dibromochloromethane	1	mg/kg	0.0021	ND
Dichlorodifluoromethane	1	mg/kg	0.0021	ND
Ethylbenzene	1	mg/kg	0.0010	ND
Isopropylbenzene	1	mg/kg	0.0010	ND
m&p-Xylenes	1	mg/kg	0.0010	ND
Methyl Acetate	1	mg/kg	0.0021	ND
Methylcyclohexane	1	mg/kg	0.0021	ND
Methylene chloride	1	mg/kg	0.0021	ND

Sample ID: SB30 **Collection Date: 12/4/2015**
Lab#: AC88606-003 **Receipt Date: 12/6/2015**
Matrix: Soil

Methyl-t-butyl ether	1	mg/kg	0.0010	ND	
o-Xylene	1	mg/kg	0.0010	ND	
Styrene	1	mg/kg	0.0021	ND	
Tetrachloroethene	1	mg/kg	0.0021	ND	
Toluene	1	mg/kg	0.0010	ND	
trans-1,2-Dichloroethene	1	mg/kg	0.0021	ND	
trans-1,3-Dichloropropene	1	mg/kg	0.0021	ND	
Trichloroethene	1	mg/kg	0.0021	ND	
Trichlorofluoromethane	1	mg/kg	0.0021	ND	
Vinyl chloride	1	mg/kg	0.0021	ND	
Xylenes (Total)	1	mg/kg	0.0010	ND	

Surrogate	Conc.	Spike	Low Limit	High Limit	Recovery	Flags
Toluene-d8	28.60	30	70	130	95	
Dibromofluoromethane	32.15	30	70	130	107	
Bromofluorobenzene	26.50	30	70	130	88	
1,2-Dichloroethane-d4	31.90	30	70	130	106	

HAZ - 110

Sample ID: SB31 | **Collection Date: 12/4/2015**
Lab#: AC88606-004 | **Receipt Date: 12/6/2015**
Matrix: Soil

% Solids SM2540G

Analyte	DF	Units	RL	Result
% Solids	1	percent		90

Ignitability (EPA 1030)

Analyte	DF	Units	RL	Result
Burning Rate (mm/sec)	1			NA
Flame Propagation (POS/NEG)	1			NA
Ignitability Screen (POS/NEG)	1			NEG

Mercury (TCLP) 7470A

Analyte	DF	Units	RL	Result
Mercury	1	mg/l	0.00070	ND

PAH Compounds 8270

Analyte	DF	Units	RL	Result
2-Methylnaphthalene	1	mg/kg	0.037	ND
Acenaphthene	1	mg/kg	0.037	ND
Acenaphthylene	1	mg/kg	0.037	ND
Anthracene	1	mg/kg	0.037	0.073
Benzo[a]anthracene	1	mg/kg	0.037	0.24
Benzo[a]pyrene	1	mg/kg	0.037	0.21
Benzo[b]fluoranthene	1	mg/kg	0.037	0.26
Benzo[g,h,i]perylene	1	mg/kg	0.037	0.14
Benzo[k]fluoranthene	1	mg/kg	0.037	0.10
Chrysene	1	mg/kg	0.037	0.21
Dibenzo[a,h]anthracene	1	mg/kg	0.037	0.048
Fluoranthene	1	mg/kg	0.037	0.46
Fluorene	1	mg/kg	0.037	ND
Indeno[1,2,3-cd]pyrene	1	mg/kg	0.037	0.13
Naphthalene	1	mg/kg	0.0093	ND
Phenanthrene	1	mg/kg	0.037	0.44
Pyrene	1	mg/kg	0.037	0.46

Surrogate	Conc.	Spike	Low Limit	High Limit	Recovery	Flags
Terphenyl-d14	53.63	50	30	130	107	
Phenol-d5	76.87	100	30	130	77	
Nitrobenzene-d5	42.71	50	30	130	85	
2-Fluorophenol	76.41	100	30	130	76	
2-Fluorobiphenyl	46.77	50	30	130	94	
2,4,6-Tribromophenol	113.34	100	30	130	113	

Paint Filter Test 9095A

Analyte	DF	Units	RL	Result
Paint Filter Test	1			NEG

PCB 8082

Analyte	DF	Units	RL	Result
Aroclor (Total)	1	mg/kg	0.028	ND
Aroclor-1016	1	mg/kg	0.028	ND
Aroclor-1221	1	mg/kg	0.028	ND
Aroclor-1232	1	mg/kg	0.028	ND
Aroclor-1242	1	mg/kg	0.028	ND
Aroclor-1248	1	mg/kg	0.028	ND
Aroclor-1254	1	mg/kg	0.028	ND
Aroclor-1260	1	mg/kg	0.028	ND
Aroclor-1262	1	mg/kg	0.028	ND
Aroclor-1268	1	mg/kg	0.028	ND

Surrogate	Conc.	Spike	Low Limit	High Limit	Recovery	Flags
TCMX-Surrogate	131.56	100	30	150	132	
TCMX-Surrogate	111.84	100	30	150	112	
DCB-Surrogate	114.14	100	30	150	114	
DCB-Surrogate	88.98	100	30	150	89	

pH 9040C/9045D

Analyte	DF	Units	RL	Result
pH	1	ph		8.6

HA7 ..111

Sample ID: SB31
Lab#: AC88606-004
Matrix: Soil

Collection Date: 12/4/2015
Receipt Date: 12/6/2015

Reactive Cyanide

Analyte	DF	Units	RL	Result
Cyanide (Reactive)	1	mg/kg	0.50	ND

Reactive Sulfide

Analyte	DF	Units	RL	Result
Sulfide (Reactive)	1	mg/kg	100	ND

TCLP Metals 6010

Analyte	DF	Units	RL	Result
Arsenic	1	mg/l	0.10	ND
Barium	**1**	**mg/l**	**0.25**	**0.26**
Cadmium	1	mg/l	0.050	ND
Chromium	1	mg/l	0.10	ND
Lead	1	mg/l	0.050	ND
Nickel	1	mg/l	0.10	ND
Selenium	1	mg/l	0.10	ND
Silver	1	mg/l	0.050	ND

Total PetroleumHydrocarbons8015B(C8-C40)

Analyte	DF	Units	RL	Result
Total Petroleum Hydrocarbons	1	mg/kg	67	ND

Volatile Organics (no search) 8260

Analyte	DF	Units	RL	Result
1,1,1-Trichloroethane	0.967	mg/kg	0.0021	ND
1,1,2,2-Tetrachloroethane	0.967	mg/kg	0.0021	ND
1,1,2-Trichloro-1,2,2-trifluoroethane	0.967	mg/kg	0.0021	ND
1,1,2-Trichloroethane	0.967	mg/kg	0.0021	ND
1,1-Dichloroethane	0.967	mg/kg	0.0021	ND
1,1-Dichloroethene	0.967	mg/kg	0.0021	ND
1,2,3-Trichlorobenzene	0.967	mg/kg	0.0021	ND
1,2,4-Trichlorobenzene	0.967	mg/kg	0.0021	ND
1,2-Dibromo-3-chloropropane	0.967	mg/kg	0.0021	ND
1,2-Dibromoethane	0.967	mg/kg	0.0021	ND
1,2-Dichlorobenzene	0.967	mg/kg	0.0021	ND
1,2-Dichloroethane	0.967	mg/kg	0.0011	ND
1,2-Dichloropropane	0.967	mg/kg	0.0021	ND
1,3-Dichlorobenzene	0.967	mg/kg	0.0021	ND
1,4-Dichlorobenzene	0.967	mg/kg	0.0021	ND
1,4-Dioxane	0.967	mg/kg	0.11	ND
2-Butanone	0.967	mg/kg	0.0021	ND
2-Hexanone	0.967	mg/kg	0.0021	ND
4-Methyl-2-pentanone	0.967	mg/kg	0.0021	ND
Acetone	0.967	mg/kg	0.011	ND
Benzene	0.967	mg/kg	0.0011	ND
Bromochloromethane	0.967	mg/kg	0.0021	ND
Bromodichloromethane	0.967	mg/kg	0.0021	ND
Bromoform	0.967	mg/kg	0.0021	ND
Bromomethane	0.967	mg/kg	0.0021	ND
Carbon disulfide	0.967	mg/kg	0.0021	ND
Carbon tetrachloride	0.967	mg/kg	0.0021	ND
Chlorobenzene	0.967	mg/kg	0.0021	ND
Chloroethane	0.967	mg/kg	0.0021	ND
Chloroform	0.967	mg/kg	0.0021	ND
Chloromethane	0.967	mg/kg	0.0021	ND
cis-1,2-Dichloroethene	0.967	mg/kg	0.0021	ND
cis-1,3-Dichloropropene	0.967	mg/kg	0.0021	ND
Cyclohexane	0.967	mg/kg	0.0021	ND
Dibromochloromethane	0.967	mg/kg	0.0021	ND
Dichlorodifluoromethane	0.967	mg/kg	0.0021	ND
Ethylbenzene	0.967	mg/kg	0.0011	ND
Isopropylbenzene	0.967	mg/kg	0.0011	ND
m&p-Xylenes	0.967	mg/kg	0.0011	ND
Methyl Acetate	0.967	mg/kg	0.0021	ND
Methylcyclohexane	0.967	mg/kg	0.0021	ND
Methylene chloride	0.967	mg/kg	0.0021	ND

Sample ID: SB31
Lab#: AC88606-004
Matrix: Soil

Collection Date: 12/4/2015
Receipt Date: 12/6/2015

Methyl-t-butyl ether	0.967	mg/kg	0.0011	ND
o-Xylene	0.967	mg/kg	0.0011	ND
Styrene	0.967	mg/kg	0.0021	ND
Tetrachloroethene	0.967	mg/kg	0.0021	ND
Toluene	0.967	mg/kg	0.0011	ND
trans-1,2-Dichloroethene	0.967	mg/kg	0.0021	ND
trans-1,3-Dichloropropene	0.967	mg/kg	0.0021	ND
Trichloroethene	0.967	mg/kg	0.0021	ND
Trichlorofluoromethane	0.967	mg/kg	0.0021	ND
Vinyl chloride	0.967	mg/kg	0.0021	ND
Xylenes (Total)	0.967	mg/kg	0.0011	ND

Surrogate	Conc.	Spike	Low Limit	High Limit	Recovery	Flags
Toluene-d8	28.15	30	70	130	94	
Dibromofluoromethane	34.14	30	70	130	114	
Bromofluorobenzene	28.33	30	70	130	94	
1,2-Dichloroethane-d4	33.64	30	70	130	112	

Sample ID: SB33 | **Collection Date: 12/4/2015**
Lab#: AC88606-005 | **Receipt Date: 12/6/2015**
Matrix: Soil

% Solids SM2540G

Analyte	DF	Units	RL	Result
% Solids	**1**	**percent**		**86**

Ignitability (EPA 1030)

Analyte	DF	Units	RL	Result
Burning Rate (mm/sec)	**1**			**NA**
Flame Propagation (POS/NEG)	**1**			**NA**
Ignitability Screen (POS/NEG)	**1**			**NEG**

Mercury (TCLP) 7470A

Analyte	DF	Units	RL	Result
Mercury	1	mg/l	0.00070	ND

PAH Compounds 8270

Analyte	DF	Units	RL	Result
2-Methylnaphthalene	1	mg/kg	0.039	ND
Acenaphthene	1	mg/kg	0.039	ND
Acenaphthylene	1	mg/kg	0.039	ND
Anthracene	1	mg/kg	0.039	ND
Benzo[a]anthracene	**1**	**mg/kg**	**0.039**	**0.042**
Benzo[a]pyrene	1	mg/kg	0.039	ND
Benzo[b]fluoranthene	**1**	**mg/kg**	**0.039**	**0.048**
Benzo[g,h,i]perylene	1	mg/kg	0.039	ND
Benzo[k]fluoranthene	1	mg/kg	0.039	ND
Chrysene	**1**	**mg/kg**	**0.039**	**0.049**
Dibenzo[a,h]anthracene	1	mg/kg	0.039	ND
Fluoranthene	**1**	**mg/kg**	**0.039**	**0.088**
Fluorene	1	mg/kg	0.039	ND
Indeno[1,2,3-cd]pyrene	1	mg/kg	0.039	ND
Naphthalene	1	mg/kg	0.0097	ND
Phenanthrene	**1**	**mg/kg**	**0.039**	**0.095**
Pyrene	**1**	**mg/kg**	**0.039**	**0.096**

Surrogate	Conc.	Spike	Low Limit	High Limit	Recovery	Flags
Terphenyl-d14	61.75	50	30	130	124	
Phenol-d5	80.74	100	30	130	81	
Nitrobenzene-d5	45.63	50	30	130	91	
2-Fluorophenol	81.20	100	30	130	81	
2-Fluorobiphenyl	50.45	50	30	130	101	
2,4,6-Tribromophenol	102.11	100	30	130	102	

Paint Filter Test 9095A

Analyte	DF	Units	RL	Result
Paint Filter Test	**1**			**NEG**

PCB 8082

Analyte	DF	Units	RL	Result
Aroclor (Total)	1	mg/kg	0.029	ND
Aroclor-1016	1	mg/kg	0.029	ND
Aroclor-1221	1	mg/kg	0.029	ND
Aroclor-1232	1	mg/kg	0.029	ND
Aroclor-1242	1	mg/kg	0.029	ND
Aroclor-1248	1	mg/kg	0.029	ND
Aroclor-1254	1	mg/kg	0.029	ND
Aroclor-1260	1	mg/kg	0.029	ND
Aroclor-1262	1	mg/kg	0.029	ND
Aroclor-1268	1	mg/kg	0.029	ND

Surrogate	Conc.	Spike	Low Limit	High Limit	Recovery	Flags
TCMX-Surrogate	111.13	100	30	150	111	
TCMX-Surrogate	101.82	100	30	150	102	
DCB-Surrogate	103.25	100	30	150	103	
DCB-Surrogate	87.37	100	30	150	87	

pH 9040C/9045D

Analyte	DF	Units	RL	Result
pH	**1**	**ph**		**8.8**

HAZ-114

Sample ID: SB33 | **Collection Date: 12/4/2015**
Lab#: AC88606-005 | **Receipt Date: 12/6/2015**
Matrix: Soil

Reactive Cyanide

Analyte	DF	Units	RL	Result
Cyanide (Reactive)	1	mg/kg	0.50	ND

Reactive Sulfide

Analyte	DF	Units	RL	Result
Sulfide (Reactive)	1	mg/kg	100	ND

TCLP Metals 6010

Analyte	DF	Units	RL	Result
Arsenic	1	mg/l	0.10	ND
Barium	**1**	**mg/l**	**0.25**	**0.29**
Cadmium	1	mg/l	0.050	ND
Chromium	1	mg/l	0.10	ND
Lead	1	mg/l	0.050	ND
Nickel	1	mg/l	0.10	ND
Selenium	1	mg/l	0.10	ND
Silver	1	mg/l	0.050	ND

Total PetroleumHydrocarbons8015B(C8-C40)

Analyte	DF	Units	RL	Result
Total Petroleum Hydrocarbons	1	mg/kg	70	ND

Volatile Organics (no search) 8260

Analyte	DF	Units	RL	Result
1,1,1-Trichloroethane	0.935	mg/kg	0.0022	ND
1,1,2,2-Tetrachloroethane	0.935	mg/kg	0.0022	ND
1,1,2-Trichloro-1,2,2-trifluoroethane	0.935	mg/kg	0.0022	ND
1,1,2-Trichloroethane	0.935	mg/kg	0.0022	ND
1,1-Dichloroethane	0.935	mg/kg	0.0022	ND
1,1-Dichloroethene	0.935	mg/kg	0.0022	ND
1,2,3-Trichlorobenzene	0.935	mg/kg	0.0022	ND
1,2,4-Trichlorobenzene	0.935	mg/kg	0.0022	ND
1,2-Dibromo-3-chloropropane	0.935	mg/kg	0.0022	ND
1,2-Dibromoethane	0.935	mg/kg	0.0022	ND
1,2-Dichlorobenzene	0.935	mg/kg	0.0022	ND
1,2-Dichloroethane	0.935	mg/kg	0.0011	ND
1,2-Dichloropropane	0.935	mg/kg	0.0022	ND
1,3-Dichlorobenzene	0.935	mg/kg	0.0022	ND
1,4-Dichlorobenzene	0.935	mg/kg	0.0022	ND
1,4-Dioxane	0.935	mg/kg	0.11	ND
2-Butanone	0.935	mg/kg	0.0022	ND
2-Hexanone	0.935	mg/kg	0.0022	ND
4-Methyl-2-pentanone	0.935	mg/kg	0.0022	ND
Acetone	0.935	mg/kg	0.011	ND
Benzene	0.935	mg/kg	0.0011	ND
Bromochloromethane	0.935	mg/kg	0.0022	ND
Bromodichloromethane	0.935	mg/kg	0.0022	ND
Bromoform	0.935	mg/kg	0.0022	ND
Bromomethane	0.935	mg/kg	0.0022	ND
Carbon disulfide	0.935	mg/kg	0.0022	ND
Carbon tetrachloride	0.935	mg/kg	0.0022	ND
Chlorobenzene	0.935	mg/kg	0.0022	ND
Chloroethane	0.935	mg/kg	0.0022	ND
Chloroform	0.935	mg/kg	0.0022	ND
Chloromethane	0.935	mg/kg	0.0022	ND
cis-1,2-Dichloroethene	0.935	mg/kg	0.0022	ND
cis-1,3-Dichloropropene	0.935	mg/kg	0.0022	ND
Cyclohexane	0.935	mg/kg	0.0022	ND
Dibromochloromethane	0.935	mg/kg	0.0022	ND
Dichlorodifluoromethane	0.935	mg/kg	0.0022	ND
Ethylbenzene	0.935	mg/kg	0.0011	ND
Isopropylbenzene	0.935	mg/kg	0.0011	ND
m&p-Xylenes	0.935	mg/kg	0.0011	ND
Methyl Acetate	0.935	mg/kg	0.0022	ND
Methylcyclohexane	0.935	mg/kg	0.0022	ND
Methylene chloride	0.935	mg/kg	0.0022	ND

Sample ID: SB33 **Collection Date: 12/4/2015**
Lab#: AC88606-005 **Receipt Date: 12/6/2015**
Matrix: Soil

Methyl-t-butyl ether	0.935	mg/kg	0.0011	ND	
o-Xylene	0.935	mg/kg	0.0011	ND	
Styrene	0.935	mg/kg	0.0022	ND	
Tetrachloroethene	0.935	mg/kg	0.0022	ND	
Toluene	0.935	mg/kg	0.0011	ND	
trans-1,2-Dichloroethene	0.935	mg/kg	0.0022	ND	
trans-1,3-Dichloropropene	0.935	mg/kg	0.0022	ND	
Trichloroethene	0.935	mg/kg	0.0022	ND	
Trichlorofluoromethane	0.935	mg/kg	0.0022	ND	
Vinyl chloride	0.935	mg/kg	0.0022	ND	
Xylenes (Total)	0.935	mg/kg	0.0011	ND	

Surrogate	Conc.	Spike	Low Limit	High Limit	Recovery	Flags
Toluene-d8	27.83	30	70	130	93	
Dibromofluoromethane	35.79	30	70	130	119	
Bromofluorobenzene	30.10	30	70	130	100	
1,2-Dichloroethane-d4	33.52	30	70	130	112	

Sample ID: SB34
Lab#: AC88606-006
Matrix: Soil

Collection Date: 12/4/2015
Receipt Date: 12/6/2015

% Solids SM2540G

Analyte	DF	Units	RL	Result
% Solids	1	percent		94

Ignitability (EPA 1030)

Analyte	DF	Units	RL	Result
Burning Rate (mm/sec)	1			NA
Flame Propagation (POS/NEG)	1			NA
Ignitability Screen (POS/NEG)	1			NEG

Mercury (TCLP) 7470A

Analyte	DF	Units	RL	Result
Mercury	1	mg/l	0.00070	ND

PAH Compounds 8270

Analyte	DF	Units	RL	Result
2-Methylnaphthalene	1	mg/kg	0.035	ND
Acenaphthene	1	mg/kg	0.035	ND
Acenaphthylene	1	mg/kg	0.035	ND
Anthracene	1	mg/kg	0.035	ND
Benzo[a]anthracene	1	mg/kg	0.035	ND
Benzo[a]pyrene	1	mg/kg	0.035	ND
Benzo[b]fluoranthene	1	mg/kg	0.035	ND
Benzo[g,h,i]perylene	1	mg/kg	0.035	ND
Benzo[k]fluoranthene	1	mg/kg	0.035	ND
Chrysene	**1**	**mg/kg**	**0.035**	**0.045**
Dibenzo[a,h]anthracene	1	mg/kg	0.035	ND
Fluoranthene	**1**	**mg/kg**	**0.035**	**0.037**
Fluorene	1	mg/kg	0.035	ND
Indeno[1,2,3-cd]pyrene	1	mg/kg	0.035	ND
Naphthalene	1	mg/kg	0.0089	ND
Phenanthrene	1	mg/kg	0.035	ND
Pyrene	**1**	**mg/kg**	**0.035**	**0.049**

Surrogate	Conc.	Spike	Low Limit	High Limit	Recovery	Flags
Terphenyl-d14	59.34	50	30	130	119	
Phenol-d5	81.09	100	30	130	81	
Nitrobenzene-d5	47.59	50	30	130	95	
2-Fluorophenol	79.96	100	30	130	80	
2-Fluorobiphenyl	51.62	50	30	130	103	
2,4,6-Tribromophenol	68.63	100	30	130	69	

Paint Filter Test 9095A

Analyte	DF	Units	RL	Result
Paint Filter Test	1			NEG

PCB 8082

Analyte	DF	Units	RL	Result
Aroclor (Total)	1	mg/kg	0.027	ND
Aroclor-1016	1	mg/kg	0.027	ND
Aroclor-1221	1	mg/kg	0.027	ND
Aroclor-1232	1	mg/kg	0.027	ND
Aroclor-1242	1	mg/kg	0.027	ND
Aroclor-1248	1	mg/kg	0.027	ND
Aroclor-1254	1	mg/kg	0.027	ND
Aroclor-1260	1	mg/kg	0.027	ND
Aroclor-1262	1	mg/kg	0.027	ND
Aroclor-1268	1	mg/kg	0.027	ND

Surrogate	Conc.	Spike	Low Limit	High Limit	Recovery	Flags
TCMX-Surrogate	89.90	100	30	150	90	
TCMX-Surrogate	83.98	100	30	150	84	
DCB-Surrogate	81.11	100	30	150	81	
DCB-Surrogate	69.87	100	30	150	70	

pH 9040C/9045D

Analyte	DF	Units	RL	Result
pH	1	ph		11

Sample ID: SB34
Lab#: AC88606-006
Matrix: Soil

Collection Date: 12/4/2015
Receipt Date: 12/6/2015

Reactive Cyanide

Analyte	DF	Units	RL	Result
Cyanide (Reactive)	1	mg/kg	0.50	ND

Reactive Sulfide

Analyte	DF	Units	RL	Result
Sulfide (Reactive)	1	mg/kg	100	ND

TCLP Metals 6010

Analyte	DF	Units	RL	Result
Arsenic	1	mg/l	0.10	ND
Barium	**1**	**mg/l**	**0.25**	**0.45**
Cadmium	1	mg/l	0.050	ND
Chromium	1	mg/l	0.10	ND
Lead	1	mg/l	0.050	ND
Nickel	1	mg/l	0.10	ND
Selenium	1	mg/l	0.10	ND
Silver	1	mg/l	0.050	ND

Total PetroleumHydrocarbons8015B(C8-C40)

Analyte	DF	Units	RL	Result
Total Petroleum Hydrocarbons	1	mg/kg	64	ND

Volatile Organics (no search) 8260

Analyte	DF	Units	RL	Result
1,1,1-Trichloroethane	0.975	mg/kg	0.0021	ND
1,1,2,2-Tetrachloroethane	0.975	mg/kg	0.0021	ND
1,1,2-Trichloro-1,2,2-trifluoroethane	0.975	mg/kg	0.0021	ND
1,1,2-Trichloroethane	0.975	mg/kg	0.0021	ND
1,1-Dichloroethane	0.975	mg/kg	0.0021	ND
1,1-Dichloroethene	0.975	mg/kg	0.0021	ND
1,2,3-Trichlorobenzene	0.975	mg/kg	0.0021	ND
1,2,4-Trichlorobenzene	0.975	mg/kg	0.0021	ND
1,2-Dibromo-3-chloropropane	0.975	mg/kg	0.0021	ND
1,2-Dibromoethane	0.975	mg/kg	0.0021	ND
1,2-Dichlorobenzene	0.975	mg/kg	0.0021	ND
1,2-Dichloroethane	0.975	mg/kg	0.0010	ND
1,2-Dichloropropane	0.975	mg/kg	0.0021	ND
1,3-Dichlorobenzene	0.975	mg/kg	0.0021	ND
1,4-Dichlorobenzene	0.975	mg/kg	0.0021	ND
1,4-Dioxane	0.975	mg/kg	0.10	ND
2-Butanone	0.975	mg/kg	0.0021	ND
2-Hexanone	0.975	mg/kg	0.0021	ND
4-Methyl-2-pentanone	0.975	mg/kg	0.0021	ND
Acetone	0.975	mg/kg	0.010	ND
Benzene	0.975	mg/kg	0.0010	ND
Bromochloromethane	0.975	mg/kg	0.0021	ND
Bromodichloromethane	0.975	mg/kg	0.0021	ND
Bromoform	0.975	mg/kg	0.0021	ND
Bromomethane	0.975	mg/kg	0.0021	ND
Carbon disulfide	0.975	mg/kg	0.0021	ND
Carbon tetrachloride	0.975	mg/kg	0.0021	ND
Chlorobenzene	0.975	mg/kg	0.0021	ND
Chloroethane	0.975	mg/kg	0.0021	ND
Chloroform	0.975	mg/kg	0.0021	ND
Chloromethane	0.975	mg/kg	0.0021	ND
cis-1,2-Dichloroethene	0.975	mg/kg	0.0021	ND
cis-1,3-Dichloropropene	0.975	mg/kg	0.0021	ND
Cyclohexane	0.975	mg/kg	0.0021	ND
Dibromochloromethane	0.975	mg/kg	0.0021	ND
Dichlorodifluoromethane	0.975	mg/kg	0.0021	ND
Ethylbenzene	0.975	mg/kg	0.0010	ND
Isopropylbenzene	0.975	mg/kg	0.0010	ND
m&p-Xylenes	0.975	mg/kg	0.0010	ND
Methyl Acetate	0.975	mg/kg	0.0021	ND
Methylcyclohexane	0.975	mg/kg	0.0021	ND
Methylene chloride	0.975	mg/kg	0.0021	ND

NOTE: Soil Results are reported to Dry Weight

Sample ID: SB34 **Collection Date: 12/4/2015**
Lab#: AC88606-006 **Receipt Date: 12/6/2015**
Matrix: Soil

Methyl-t-butyl ether	0.975	mg/kg	0.0010	ND
o-Xylene	0.975	mg/kg	0.0010	ND
Styrene	0.975	mg/kg	0.0021	ND
Tetrachloroethene	0.975	mg/kg	0.0021	ND
Toluene	0.975	mg/kg	0.0010	ND
trans-1,2-Dichloroethene	0.975	mg/kg	0.0021	ND
trans-1,3-Dichloropropene	0.975	mg/kg	0.0021	ND
Trichloroethene	0.975	mg/kg	0.0021	ND
Trichlorofluoromethane	0.975	mg/kg	0.0021	ND
Vinyl chloride	0.975	mg/kg	0.0021	ND
Xylenes (Total)	0.975	mg/kg	0.0010	ND

Surrogate	Conc.	Spike	Low Limit	High Limit	Recovery	Flags
Toluene-d8	27.56	30	70	130	92	
Dibromofluoromethane	35.86	30	70	130	120	
Bromofluorobenzene	29.64	30	70	130	99	
1,2-Dichloroethane-d4	33.79	30	70	130	113	

Sample ID: SB35	**Collection Date: 12/4/2015**
Lab#: AC88606-007	**Receipt Date: 12/6/2015**
Matrix: Soil	

% Solids SM2540G

Analyte	DF	Units	RL	Result
% Solids	1	percent		92

Ignitability (EPA 1030)

Analyte	DF	Units	RL	Result
Burning Rate (mm/sec)	1			NA
Flame Propagation (POS/NEG)	1			NA
Ignitability Screen (POS/NEG)	1			NEG

Mercury (TCLP) 7470A

Analyte	DF	Units	RL	Result
Mercury	1	mg/l	0.00070	ND

PAH Compounds 8270

Analyte	DF	Units	RL	Result
2-Methylnaphthalene	1	mg/kg	0.036	ND
Acenaphthene	1	mg/kg	0.036	ND
Acenaphthylene	1	mg/kg	0.036	ND
Anthracene	1	mg/kg	0.036	ND
Benzo[a]anthracene	1	mg/kg	0.036	ND
Benzo[a]pyrene	1	mg/kg	0.036	ND
Benzo[b]fluoranthene	**1**	**mg/kg**	**0.036**	**0.036**
Benzo[g,h,i]perylene	1	mg/kg	0.036	ND
Benzo[k]fluoranthene	1	mg/kg	0.036	ND
Chrysene	1	mg/kg	0.036	ND
Dibenzo[a,h]anthracene	1	mg/kg	0.036	ND
Fluoranthene	1	mg/kg	0.036	ND
Fluorene	1	mg/kg	0.036	ND
Indeno[1,2,3-cd]pyrene	1	mg/kg	0.036	ND
Naphthalene	1	mg/kg	0.0091	ND
Phenanthrene	1	mg/kg	0.036	ND
Pyrene	**1**	**mg/kg**	**0.036**	**0.042**

Surrogate	Conc.	Spike	Low Limit	High Limit	Recovery	Flags
Terphenyl-d14	57.64	50	30	130	115	
Phenol-d5	76.76	100	30	130	77	
Nitrobenzene-d5	45.18	50	30	130	90	
2-Fluorophenol	77.25	100	30	130	77	
2-Fluorobiphenyl	48.85	50	30	130	98	
2,4,6-Tribromophenol	79.44	100	30	130	79	

Paint Filter Test 9095A

Analyte	DF	Units	RL	Result
Paint Filter Test	1			NEG

PCB 8082

Analyte	DF	Units	RL	Result
Aroclor (Total)	1	mg/kg	0.027	ND
Aroclor-1016	1	mg/kg	0.027	ND
Aroclor-1221	1	mg/kg	0.027	ND
Aroclor-1232	1	mg/kg	0.027	ND
Aroclor-1242	1	mg/kg	0.027	ND
Aroclor-1248	1	mg/kg	0.027	ND
Aroclor-1254	1	mg/kg	0.027	ND
Aroclor-1260	1	mg/kg	0.027	ND
Aroclor-1262	1	mg/kg	0.027	ND
Aroclor-1268	1	mg/kg	0.027	ND

Surrogate	Conc.	Spike	Low Limit	High Limit	Recovery	Flags
TCMX-Surrogate	92.97	100	30	150	93	
TCMX-Surrogate	85.78	100	30	150	86	
DCB-Surrogate	85.45	100	30	150	85	
DCB-Surrogate	73.13	100	30	150	73	

pH 9040C/9045D

Analyte	DF	Units	RL	Result
pH	1	ph		11

Sample ID: SB35
Lab#: AC88606-007
Matrix: Soil

Collection Date: 12/4/2015
Receipt Date: 12/6/2015

Reactive Cyanide

Analyte	DF	Units	RL	Result
Cyanide (Reactive)	1	mg/kg	0.50	ND

Reactive Sulfide

Analyte	DF	Units	RL	Result
Sulfide (Reactive)	1	mg/kg	100	ND

TCLP Metals 6010

Analyte	DF	Units	RL	Result
Arsenic	1	mg/l	0.10	ND
Barium	**1**	**mg/l**	**0.25**	**0.47**
Cadmium	1	mg/l	0.050	ND
Chromium	1	mg/l	0.10	ND
Lead	1	mg/l	0.050	ND
Nickel	1	mg/l	0.10	ND
Selenium	1	mg/l	0.10	ND
Silver	1	mg/l	0.050	ND

Total PetroleumHydrocarbons8015B(C8-C40)

Analyte	DF	Units	RL	Result
Total Petroleum Hydrocarbons	1	mg/kg	65	ND

Volatile Organics (no search) 8260

Analyte	DF	Units	RL	Result
1,1,1-Trichloroethane	0.876	mg/kg	0.0019	ND
1,1,2,2-Tetrachloroethane	0.876	mg/kg	0.0019	ND
1,1,2-Trichloro-1,2,2-trifluoroethane	0.876	mg/kg	0.0019	ND
1,1,2-Trichloroethane	0.876	mg/kg	0.0019	ND
1,1-Dichloroethane	0.876	mg/kg	0.0019	ND
1,1-Dichloroethene	0.876	mg/kg	0.0019	ND
1,2,3-Trichlorobenzene	0.876	mg/kg	0.0019	ND
1,2,4-Trichlorobenzene	0.876	mg/kg	0.0019	ND
1,2-Dibromo-3-chloropropane	0.876	mg/kg	0.0019	ND
1,2-Dibromoethane	0.876	mg/kg	0.0019	ND
1,2-Dichlorobenzene	0.876	mg/kg	0.0019	ND
1,2-Dichloroethane	0.876	mg/kg	0.00095	ND
1,2-Dichloropropane	0.876	mg/kg	0.0019	ND
1,3-Dichlorobenzene	0.876	mg/kg	0.0019	ND
1,4-Dichlorobenzene	0.876	mg/kg	0.0019	ND
1,4-Dioxane	0.876	mg/kg	0.095	ND
2-Butanone	0.876	mg/kg	0.0019	ND
2-Hexanone	0.876	mg/kg	0.0019	ND
4-Methyl-2-pentanone	0.876	mg/kg	0.0019	ND
Acetone	0.876	mg/kg	0.0095	ND
Benzene	0.876	mg/kg	0.00095	ND
Bromochloromethane	0.876	mg/kg	0.0019	ND
Bromodichloromethane	0.876	mg/kg	0.0019	ND
Bromoform	0.876	mg/kg	0.0019	ND
Bromomethane	0.876	mg/kg	0.0019	ND
Carbon disulfide	0.876	mg/kg	0.0019	ND
Carbon tetrachloride	0.876	mg/kg	0.0019	ND
Chlorobenzene	0.876	mg/kg	0.0019	ND
Chloroethane	0.876	mg/kg	0.0019	ND
Chloroform	0.876	mg/kg	0.0019	ND
Chloromethane	0.876	mg/kg	0.0019	ND
cis-1,2-Dichloroethene	0.876	mg/kg	0.0019	ND
cis-1,3-Dichloropropene	0.876	mg/kg	0.0019	ND
Cyclohexane	0.876	mg/kg	0.0019	ND
Dibromochloromethane	0.876	mg/kg	0.0019	ND
Dichlorodifluoromethane	0.876	mg/kg	0.0019	ND
Ethylbenzene	0.876	mg/kg	0.00095	ND
Isopropylbenzene	0.876	mg/kg	0.00095	ND
m&p-Xylenes	0.876	mg/kg	0.00095	ND
Methyl Acetate	0.876	mg/kg	0.0019	ND
Methylcyclohexane	0.876	mg/kg	0.0019	ND
Methylene chloride	**0.876**	**mg/kg**	**0.0019**	**0.0039**

NOTE: Soil Results are reported to Dry Weight

Sample ID: SB35 **Collection Date: 12/4/2015**
Lab#: AC88606-007 **Receipt Date: 12/6/2015**
Matrix: Soil

Methyl-t-butyl ether	0.876	mg/kg	0.00095	ND
o-Xylene	0.876	mg/kg	0.00095	ND
Styrene	0.876	mg/kg	0.0019	ND
Tetrachloroethene	0.876	mg/kg	0.0019	ND
Toluene	0.876	mg/kg	0.00095	ND
trans-1,2-Dichloroethene	0.876	mg/kg	0.0019	ND
trans-1,3-Dichloropropene	0.876	mg/kg	0.0019	ND
Trichloroethene	0.876	mg/kg	0.0019	ND
Trichlorofluoromethane	0.876	mg/kg	0.0019	ND
Vinyl chloride	0.876	mg/kg	0.0019	ND
Xylenes (Total)	0.876	mg/kg	0.00095	ND

Surrogate	Conc.	Spike	Low Limit	High Limit	Recovery	Flags
Toluene-d8	28.64	30	70	130	95	
Dibromofluoromethane	32.51	30	70	130	108	
Bromofluorobenzene	28.60	30	70	130	95	
1,2-Dichloroethane-d4	29.56	30	70	130	99	

Sample ID: SB36 | **Collection Date: 12/4/2015**
Lab#: AC88606-008 | **Receipt Date: 12/6/2015**
Matrix: Soil

% Solids SM2540G

Analyte	DF	Units	RL	Result
%Solids	**1**	**percent**		**93**

Ignitability (EPA 1030)

Analyte	DF	Units	RL	Result
Burning Rate (mm/sec)	**1**			**NA**
Flame Propagation (POS/NEG)	**1**			**NA**
Ignitability Screen (POS/NEG)	**1**			**NEG**

Mercury (TCLP) 7470A

Analyte	DF	Units	RL	Result
Mercury	1	mg/l	0.00070	ND

PAH Compounds 8270

Analyte	DF	Units	RL	Result
2-Methylnaphthalene	1	mg/kg	0.036	ND
Acenaphthene	1	mg/kg	0.036	ND
Acenaphthylene	1	mg/kg	0.036	ND
Anthracene	1	mg/kg	0.036	ND
Benzo[a]anthracene	**1**	**mg/kg**	**0.036**	**0.14**
Benzo[a]pyrene	**1**	**mg/kg**	**0.036**	**0.097**
Benzo[b]fluoranthene	**1**	**mg/kg**	**0.036**	**0.13**
Benzo[g,h,i]perylene	**1**	**mg/kg**	**0.036**	**0.075**
Benzo[k]fluoranthene	**1**	**mg/kg**	**0.036**	**0.043**
Chrysene	**1**	**mg/kg**	**0.036**	**0.13**
Dibenzo[a,h]anthracene	1	mg/kg	0.036	ND
Fluoranthene	**1**	**mg/kg**	**0.036**	**0.18**
Fluorene	1	mg/kg	0.036	ND
Indeno[1,2,3-cd]pyrene	**1**	**mg/kg**	**0.036**	**0.057**
Naphthalene	1	mg/kg	0.0090	ND
Phenanthrene	**1**	**mg/kg**	**0.036**	**0.14**
Pyrene	**1**	**mg/kg**	**0.036**	**0.23**

Surrogate	Conc.	Spike	Low Limit	High Limit	Recovery	Flags
Terphenyl-d14	53.44	50	30	130	107	
Phenol-d5	79.36	100	30	130	79	
Nitrobenzene-d5	45.62	50	30	130	91	
2-Fluorophenol	78.48	100	30	130	78	
2-Fluorobiphenyl	48.97	50	30	130	98	
2,4,6-Tribromophenol	65.00	100	30	130	65	

Paint Filter Test 9095A

Analyte	DF	Units	RL	Result
Paint Filter Test	**1**			**NEG**

PCB 8082

Analyte	DF	Units	RL	Result
Aroclor (Total)	1	mg/kg	0.027	ND
Aroclor-1016	1	mg/kg	0.027	ND
Aroclor-1221	1	mg/kg	0.027	ND
Aroclor-1232	1	mg/kg	0.027	ND
Aroclor-1242	1	mg/kg	0.027	ND
Aroclor-1248	1	mg/kg	0.027	ND
Aroclor-1254	1	mg/kg	0.027	ND
Aroclor-1260	1	mg/kg	0.027	ND
Aroclor-1262	1	mg/kg	0.027	ND
Aroclor-1268	1	mg/kg	0.027	ND

Surrogate	Conc.	Spike	Low Limit	High Limit	Recovery	Flags
TCMX-Surrogate	94.18	100	30	150	94	
TCMX-Surrogate	86.87	100	30	150	87	
DCB-Surrogate	89.03	100	30	150	89	
DCB-Surrogate	73.86	100	30	150	74	

pH 9040C/9045D

Analyte	DF	Units	RL	Result
pH	**1**	**ph**		**11**

Sample ID: SB36
Lab#: AC88606-008
Matrix: Soil

Collection Date: 12/4/2015
Receipt Date: 12/6/2015

Reactive Cyanide

Analyte	DF	Units	RL	Result
Cyanide (Reactive)	1	mg/kg	0.50	ND

Reactive Sulfide

Analyte	DF	Units	RL	Result
Sulfide (Reactive)	1	mg/kg	100	ND

TCLP Metals 6010

Analyte	DF	Units	RL	Result
Arsenic	1	mg/l	0.10	ND
Barium	**1**	**mg/l**	**0.25**	**0.48**
Cadmium	1	mg/l	0.050	ND
Chromium	1	mg/l	0.10	ND
Lead	1	mg/l	0.050	ND
Nickel	1	mg/l	0.10	ND
Selenium	1	mg/l	0.10	ND
Silver	1	mg/l	0.050	ND

Total PetroleumHydrocarbons8015B(C8-C40)

Analyte	DF	Units	RL	Result
Total Petroleum Hydrocarbons	1	mg/kg	65	ND

Volatile Organics (no search) 8260

Analyte	DF	Units	RL	Result
1,1,1-Trichloroethane	0.856	mg/kg	0.0018	ND
1,1,2,2-Tetrachloroethane	0.856	mg/kg	0.0018	ND
1,1,2-Trichloro-1,2,2-trifluoroethane	0.856	mg/kg	0.0018	ND
1,1,2-Trichloroethane	0.856	mg/kg	0.0018	ND
1,1-Dichloroethane	0.856	mg/kg	0.0018	ND
1,1-Dichloroethene	0.856	mg/kg	0.0018	ND
1,2,3-Trichlorobenzene	0.856	mg/kg	0.0018	ND
1,2,4-Trichlorobenzene	0.856	mg/kg	0.0018	ND
1,2-Dibromo-3-chloropropane	0.856	mg/kg	0.0018	ND
1,2-Dibromoethane	0.856	mg/kg	0.0018	ND
1,2-Dichlorobenzene	0.856	mg/kg	0.0018	ND
1,2-Dichloroethane	0.856	mg/kg	0.00092	ND
1,2-Dichloropropane	0.856	mg/kg	0.0018	ND
1,3-Dichlorobenzene	0.856	mg/kg	0.0018	ND
1,4-Dichlorobenzene	0.856	mg/kg	0.0018	ND
1,4-Dioxane	0.856	mg/kg	0.092	ND
2-Butanone	0.856	mg/kg	0.0018	ND
2-Hexanone	0.856	mg/kg	0.0018	ND
4-Methyl-2-pentanone	0.856	mg/kg	0.0018	ND
Acetone	0.856	mg/kg	0.0092	ND
Benzene	0.856	mg/kg	0.00092	ND
Bromochloromethane	0.856	mg/kg	0.0018	ND
Bromodichloromethane	0.856	mg/kg	0.0018	ND
Bromoform	0.856	mg/kg	0.0018	ND
Bromomethane	0.856	mg/kg	0.0018	ND
Carbon disulfide	0.856	mg/kg	0.0018	ND
Carbon tetrachloride	0.856	mg/kg	0.0018	ND
Chlorobenzene	0.856	mg/kg	0.0018	ND
Chloroethane	0.856	mg/kg	0.0018	ND
Chloroform	0.856	mg/kg	0.0018	ND
Chloromethane	0.856	mg/kg	0.0018	ND
cis-1,2-Dichloroethene	0.856	mg/kg	0.0018	ND
cis-1,3-Dichloropropene	0.856	mg/kg	0.0018	ND
Cyclohexane	0.856	mg/kg	0.0018	ND
Dibromochloromethane	0.856	mg/kg	0.0018	ND
Dichlorodifluoromethane	0.856	mg/kg	0.0018	ND
Ethylbenzene	0.856	mg/kg	0.00092	ND
Isopropylbenzene	0.856	mg/kg	0.00092	ND
m&p-Xylenes	0.856	mg/kg	0.00092	ND
Methyl Acetate	0.856	mg/kg	0.0018	ND
Methylcyclohexane	0.856	mg/kg	0.0018	ND
Methylene chloride	0.856	mg/kg	0.0018	ND

Sample ID: SB36 **Collection Date: 12/4/2015**
Lab#: AC88606-008 **Receipt Date: 12/6/2015**
Matrix: Soil

Methyl-t-butyl ether	0.856	mg/kg	0.00092	ND
o-Xylene	0.856	mg/kg	0.00092	ND
Styrene	0.856	mg/kg	0.0018	ND
Tetrachloroethene	0.856	mg/kg	0.0018	ND
Toluene	0.856	mg/kg	0.00092	ND
trans-1,2-Dichloroethene	0.856	mg/kg	0.0018	ND
trans-1,3-Dichloropropene	0.856	mg/kg	0.0018	ND
Trichloroethene	0.856	mg/kg	0.0018	ND
Trichlorofluoromethane	0.856	mg/kg	0.0018	ND
Vinyl chloride	0.856	mg/kg	0.0018	ND
Xylenes (Total)	0.856	mg/kg	0.00092	ND

Surrogate	Conc.	Spike	Low Limit	High Limit	Recovery	Flags
Toluene-d8	27.59	30	70	130	92	
Dibromofluoromethane	33.72	30	70	130	112	
Bromofluorobenzene	28.30	30	70	130	94	
1,2-Dichloroethane-d4	34.18	30	70	130	114	

Sample ID: SB01
Lab#: AC88606-009
Matrix: Soil

Collection Date: 12/3/2015
Receipt Date: 12/6/2015

% Solids SM2540G

Analyte	DF	Units	RL	Result
% Solids	**1**	**percent**		**87**

Ignitability (EPA 1030)

Analyte	DF	Units	RL	Result
Burning Rate (mm/sec)	**1**			**NA**
Flame Propagation (POS/NEG)	**1**			**NA**
Ignitability Screen (POS/NEG)	**1**			**NEG**

Mercury (TCLP) 7470A

Analyte	DF	Units	RL	Result
Mercury	1	mg/l	0.00070	ND

PAH Compounds 8270

Analyte	DF	Units	RL	Result
2-Methylnaphthalene	1	mg/kg	0.038	ND
Acenaphthene	1	mg/kg	0.038	ND
Acenaphthylene	1	mg/kg	0.038	ND
Anthracene	1	mg/kg	0.038	ND
Benzo[a]anthracene	**1**	**mg/kg**	**0.038**	**0.049**
Benzo[a]pyrene	**1**	**mg/kg**	**0.038**	**0.041**
Benzo[b]fluoranthene	**1**	**mg/kg**	**0.038**	**0.061**
Benzo[g,h,i]perylene	1	mg/kg	0.038	ND
Benzo[k]fluoranthene	1	mg/kg	0.038	ND
Chrysene	**1**	**mg/kg**	**0.038**	**0.044**
Dibenzo[a,h]anthracene	1	mg/kg	0.038	ND
Fluoranthene	**1**	**mg/kg**	**0.038**	**0.065**
Fluorene	1	mg/kg	0.038	ND
Indeno[1,2,3-cd]pyrene	1	mg/kg	0.038	ND
Naphthalene	1	mg/kg	0.0096	ND
Phenanthrene	1	mg/kg	0.038	ND
Pyrene	**1**	**mg/kg**	**0.038**	**0.072**

Surrogate	Conc.	Spike	Low Limit	High Limit	Recovery	Flags
Terphenyl-d14	45.66	50	30	130	91	
Phenol-d5	73.79	100	30	130	74	
Nitrobenzene-d5	39.57	50	30	130	79	
2-Fluorophenol	76.92	100	30	130	77	
2-Fluorobiphenyl	42.54	50	30	130	85	
2,4,6-Tribromophenol	104.44	100	30	130	104	

Paint Filter Test 9095A

Analyte	DF	Units	RL	Result
Paint Filter Test	**1**			**NEG**

PCB 8082

Analyte	DF	Units	RL	Result
Aroclor (Total)	1	mg/kg	0.029	ND
Aroclor-1016	1	mg/kg	0.029	ND
Aroclor-1221	1	mg/kg	0.029	ND
Aroclor-1232	1	mg/kg	0.029	ND
Aroclor-1242	1	mg/kg	0.029	ND
Aroclor-1248	1	mg/kg	0.029	ND
Aroclor-1254	1	mg/kg	0.029	ND
Aroclor-1260	1	mg/kg	0.029	ND
Aroclor-1262	1	mg/kg	0.029	ND
Aroclor-1268	1	mg/kg	0.029	ND

Surrogate	Conc.	Spike	Low Limit	High Limit	Recovery	Flags
TCMX-Surrogate	82.40	100	30	150	82	
TCMX-Surrogate	77.33	100	30	150	77	
DCB-Surrogate	76.62	100	30	150	77	
DCB-Surrogate	66.39	100	30	150	66	

pH 9040C/9045D

Analyte	DF	Units	RL	Result
pH	**1**	**ph**		**8.4**

NOTE: Soil Results are reported to Dry Weight

Project #: 5120701

HAZ-126

Sample ID: SB01 | **Collection Date: 12/3/2015**
Lab#: AC88606-009 | **Receipt Date: 12/6/2015**
Matrix: Soil

Reactive Cyanide

Analyte	DF	Units	RL	Result
Cyanide (Reactive)	1	mg/kg	0.50	ND

Reactive Sulfide

Analyte	DF	Units	RL	Result
Sulfide (Reactive)	1	mg/kg	100	ND

TCLP Metals 6010

Analyte	DF	Units	RL	Result
Arsenic	1	mg/l	0.10	ND
Barium	**1**	**mg/l**	**0.25**	**0.63**
Cadmium	1	mg/l	0.050	ND
Chromium	1	mg/l	0.10	ND
Lead	1	mg/l	0.050	ND
Nickel	1	mg/l	0.10	ND
Selenium	1	mg/l	0.10	ND
Silver	1	mg/l	0.050	ND

Total PetroleumHydrocarbons8015B(C8-C40)

Analyte	DF	Units	RL	Result
Total Petroleum Hydrocarbons	1	mg/kg	69	ND

Volatile Organics (no search) 8260

Analyte	DF	Units	RL	Result
1,1,1-Trichloroethane	0.938	mg/kg	0.0022	ND
1,1,2,2-Tetrachloroethane	0.938	mg/kg	0.0022	ND
1,1,2-Trichloro-1,2,2-trifluoroethane	0.938	mg/kg	0.0022	ND
1,1,2-Trichloroethane	0.938	mg/kg	0.0022	ND
1,1-Dichloroethane	0.938	mg/kg	0.0022	ND
1,1-Dichloroethene	0.938	mg/kg	0.0022	ND
1,2,3-Trichlorobenzene	0.938	mg/kg	0.0022	ND
1,2,4-Trichlorobenzene	0.938	mg/kg	0.0022	ND
1,2-Dibromo-3-chloropropane	0.938	mg/kg	0.0022	ND
1,2-Dibromoethane	0.938	mg/kg	0.0022	ND
1,2-Dichlorobenzene	0.938	mg/kg	0.0022	ND
1,2-Dichloroethane	0.938	mg/kg	0.0011	ND
1,2-Dichloropropane	0.938	mg/kg	0.0022	ND
1,3-Dichlorobenzene	0.938	mg/kg	0.0022	ND
1,4-Dichlorobenzene	0.938	mg/kg	0.0022	ND
1,4-Dioxane	0.938	mg/kg	0.11	ND
2-Butanone	0.938	mg/kg	0.0022	ND
2-Hexanone	0.938	mg/kg	0.0022	ND
4-Methyl-2-pentanone	0.938	mg/kg	0.0022	ND
Acetone	0.938	mg/kg	0.011	ND
Benzene	0.938	mg/kg	0.0011	ND
Bromochloromethane	0.938	mg/kg	0.0022	ND
Bromodichloromethane	0.938	mg/kg	0.0022	ND
Bromoform	0.938	mg/kg	0.0022	ND
Bromomethane	0.938	mg/kg	0.0022	ND
Carbon disulfide	0.938	mg/kg	0.0022	ND
Carbon tetrachloride	0.938	mg/kg	0.0022	ND
Chlorobenzene	0.938	mg/kg	0.0022	ND
Chloroethane	0.938	mg/kg	0.0022	ND
Chloroform	0.938	mg/kg	0.0022	ND
Chloromethane	0.938	mg/kg	0.0022	ND
cis-1,2-Dichloroethene	0.938	mg/kg	0.0022	ND
cis-1,3-Dichloropropene	0.938	mg/kg	0.0022	ND
Cyclohexane	0.938	mg/kg	0.0022	ND
Dibromochloromethane	0.938	mg/kg	0.0022	ND
Dichlorodifluoromethane	0.938	mg/kg	0.0022	ND
Ethylbenzene	0.938	mg/kg	0.0011	ND
Isopropylbenzene	0.938	mg/kg	0.0011	ND
m&p-Xylenes	0.938	mg/kg	0.0011	ND
Methyl Acetate	0.938	mg/kg	0.0022	ND
Methylcyclohexane	0.938	mg/kg	0.0022	ND
Methylene chloride	**0.938**	**mg/kg**	**0.0022**	**0.0060**

NOTE: Soil Results are reported to Dry Weight

Sample ID: SB01 **Collection Date: 12/3/2015**
Lab#: AC88606-009 **Receipt Date: 12/6/2015**
Matrix: Soil

Methyl-t-butyl ether	0.938	mg/kg	0.0011	ND
o-Xylene	0.938	mg/kg	0.0011	ND
Styrene	0.938	mg/kg	0.0022	ND
Tetrachloroethene	**0.938**	**mg/kg**	**0.0022**	**0.0022**
Toluene	0.938	mg/kg	0.0011	ND
trans-1,2-Dichloroethene	0.938	mg/kg	0.0022	ND
trans-1,3-Dichloropropene	0.938	mg/kg	0.0022	ND
Trichloroethene	0.938	mg/kg	0.0022	ND
Trichlorofluoromethane	0.938	mg/kg	0.0022	ND
Vinyl chloride	0.938	mg/kg	0.0022	ND
Xylenes (Total)	0.938	mg/kg	0.0011	ND

Surrogate	Conc.	Spike	Low Limit	High Limit	Recovery	Flags
Toluene-d8	27.35	30	70	130	91	
Dibromofluoromethane	34.45	30	70	130	115	
Bromofluorobenzene	29.15	30	70	130	97	
1,2-Dichloroethane-d4	33.05	30	70	130	110	

Sample ID: SB02 | **Collection Date: 12/3/2015**
Lab#: AC88606-010 | **Receipt Date: 12/6/2015**
Matrix: Soil

% Solids SM2540G

Analyte	DF	Units	RL	Result
% Solids	1	percent		87

Ignitability (EPA 1030)

Analyte	DF	Units	RL	Result
Burning Rate (mm/sec)	1			NA
Flame Propagation (POS/NEG)	1			NA
Ignitability Screen (POS/NEG)	1			NEG

Mercury (TCLP) 7470A

Analyte	DF	Units	RL	Result
Mercury	1	mg/l	0.00070	ND

PAH Compounds 8270

Analyte	DF	Units	RL	Result
2-Methylnaphthalene	1	mg/kg	0.038	ND
Acenaphthene	1	mg/kg	0.038	ND
Acenaphthylene	1	mg/kg	0.038	ND
Anthracene	1	mg/kg	0.038	ND
Benzo[a]anthracene	1	mg/kg	0.038	ND
Benzo[a]pyrene	1	mg/kg	0.038	ND
Benzo[b]fluoranthene	1	mg/kg	0.038	ND
Benzo[g,h,i]perylene	1	mg/kg	0.038	ND
Benzo[k]fluoranthene	1	mg/kg	0.038	ND
Chrysene	1	mg/kg	0.038	ND
Dibenzo[a,h]anthracene	1	mg/kg	0.038	ND
Fluoranthene	1	mg/kg	0.038	ND
Fluorene	1	mg/kg	0.038	ND
Indeno[1,2,3-cd]pyrene	1	mg/kg	0.038	ND
Naphthalene	1	mg/kg	0.0096	ND
Phenanthrene	1	mg/kg	0.038	ND
Pyrene	1	mg/kg	0.038	ND

Surrogate	Conc.	Spike	Low Limit	High Limit	Recovery	Flags
Terphenyl-d14	40.63	50	30	130	81	
Phenol-d5	64.45	100	30	130	64	
Nitrobenzene-d5	33.78	50	30	130	68	
2-Fluorophenol	64.14	100	30	130	64	
2-Fluorobiphenyl	35.68	50	30	130	71	
2,4,6-Tribromophenol	87.84	100	30	130	88	

Paint Filter Test 9095A

Analyte	DF	Units	RL	Result
Paint Filter Test	1			NEG

PCB 8082

Analyte	DF	Units	RL	Result
Aroclor (Total)	1	mg/kg	0.029	ND
Aroclor-1016	1	mg/kg	0.029	ND
Aroclor-1221	1	mg/kg	0.029	ND
Aroclor-1232	1	mg/kg	0.029	ND
Aroclor-1242	1	mg/kg	0.029	ND
Aroclor-1248	1	mg/kg	0.029	ND
Aroclor-1254	1	mg/kg	0.029	ND
Aroclor-1260	1	mg/kg	0.029	ND
Aroclor-1262	1	mg/kg	0.029	ND
Aroclor-1268	1	mg/kg	0.029	ND

Surrogate	Conc.	Spike	Low Limit	High Limit	Recovery	Flags
TCMX-Surrogate	83.86	100	30	150	84	
TCMX-Surrogate	77.44	100	30	150	77	
DCB-Surrogate	77.00	100	30	150	77	
DCB-Surrogate	67.15	100	30	150	67	

pH 9040C/9045D

Analyte	DF	Units	RL	Result
pH	1	ph		8.3

Sample ID: SB02	**Collection Date: 12/3/2015**
Lab#: AC88606-010	**Receipt Date: 12/6/2015**
Matrix: Soil	

Reactive Cyanide

Analyte	DF	Units	RL	Result
Cyanide (Reactive)	1	mg/kg	0.50	ND

Reactive Sulfide

Analyte	DF	Units	RL	Result
Sulfide (Reactive)	1	mg/kg	100	ND

TCLP Metals 6010

Analyte	DF	Units	RL	Result
Arsenic	1	mg/l	0.10	ND
Barium	**1**	**mg/l**	**0.25**	**0.54**
Cadmium	1	mg/l	0.050	ND
Chromium	1	mg/l	0.10	ND
Lead	1	mg/l	0.050	ND
Nickel	1	mg/l	0.10	ND
Selenium	1	mg/l	0.10	ND
Silver	1	mg/l	0.050	ND

Total PetroleumHydrocarbons8015B(C8-C40)

Analyte	DF	Units	RL	Result
Total Petroleum Hydrocarbons	1	mg/kg	69	ND

Volatile Organics (no search) 8260

Analyte	DF	Units	RL	Result
1,1,1-Trichloroethane	0.971	mg/kg	0.0022	ND
1,1,2,2-Tetrachloroethane	0.971	mg/kg	0.0022	ND
1,1,2-Trichloro-1,2,2-trifluoroethane	0.971	mg/kg	0.0022	ND
1,1,2-Trichloroethane	0.971	mg/kg	0.0022	ND
1,1-Dichloroethane	0.971	mg/kg	0.0022	ND
1,1-Dichloroethene	0.971	mg/kg	0.0022	ND
1,2,3-Trichlorobenzene	0.971	mg/kg	0.0022	ND
1,2,4-Trichlorobenzene	0.971	mg/kg	0.0022	ND
1,2-Dibromo-3-chloropropane	0.971	mg/kg	0.0022	ND
1,2-Dibromoethane	0.971	mg/kg	0.0022	ND
1,2-Dichlorobenzene	0.971	mg/kg	0.0022	ND
1,2-Dichloroethane	0.971	mg/kg	0.0011	ND
1,2-Dichloropropane	0.971	mg/kg	0.0022	ND
1,3-Dichlorobenzene	0.971	mg/kg	0.0022	ND
1,4-Dichlorobenzene	0.971	mg/kg	0.0022	ND
1,4-Dioxane	0.971	mg/kg	0.11	ND
2-Butanone	0.971	mg/kg	0.0022	ND
2-Hexanone	0.971	mg/kg	0.0022	ND
4-Methyl-2-pentanone	0.971	mg/kg	0.0022	ND
Acetone	0.971	mg/kg	0.011	ND
Benzene	0.971	mg/kg	0.0011	ND
Bromochloromethane	0.971	mg/kg	0.0022	ND
Bromodichloromethane	0.971	mg/kg	0.0022	ND
Bromoform	0.971	mg/kg	0.0022	ND
Bromomethane	0.971	mg/kg	0.0022	ND
Carbon disulfide	0.971	mg/kg	0.0022	ND
Carbon tetrachloride	0.971	mg/kg	0.0022	ND
Chlorobenzene	0.971	mg/kg	0.0022	ND
Chloroethane	0.971	mg/kg	0.0022	ND
Chloroform	0.971	mg/kg	0.0022	ND
Chloromethane	0.971	mg/kg	0.0022	ND
cis-1,2-Dichloroethene	0.971	mg/kg	0.0022	ND
cis-1,3-Dichloropropene	0.971	mg/kg	0.0022	ND
Cyclohexane	0.971	mg/kg	0.0022	ND
Dibromochloromethane	0.971	mg/kg	0.0022	ND
Dichlorodifluoromethane	0.971	mg/kg	0.0022	ND
Ethylbenzene	0.971	mg/kg	0.0011	ND
Isopropylbenzene	0.971	mg/kg	0.0011	ND
m&p-Xylenes	0.971	mg/kg	0.0011	ND
Methyl Acetate	0.971	mg/kg	0.0022	ND
Methylcyclohexane	0.971	mg/kg	0.0022	ND
Methylene chloride	**0.971**	**mg/kg**	**0.0022**	**0.015**

Sample ID: SB02 **Collection Date: 12/3/2015**
Lab#: AC88606-010 **Receipt Date: 12/6/2015**
Matrix: Soil

Methyl-t-butyl ether	0.971	mg/kg	0.0011	ND
o-Xylene	0.971	mg/kg	0.0011	ND
Styrene	0.971	mg/kg	0.0022	ND
Tetrachloroethene	0.971	mg/kg	0.0022	ND
Toluene	0.971	mg/kg	0.0011	ND
trans-1,2-Dichloroethene	0.971	mg/kg	0.0022	ND
trans-1,3-Dichloropropene	0.971	mg/kg	0.0022	ND
Trichloroethene	0.971	mg/kg	0.0022	ND
Trichlorofluoromethane	0.971	mg/kg	0.0022	ND
Vinyl chloride	0.971	mg/kg	0.0022	ND
Xylenes (Total)	0.971	mg/kg	0.0011	ND

Surrogate	Conc.	Spike	Low Limit	High Limit	Recovery	Flags
Toluene-d8	27.28	30	70	130	91	
Dibromofluoromethane	35.13	30	70	130	117	
Bromofluorobenzene	28.41	30	70	130	95	
1,2-Dichloroethane-d4	29.95	30	70	130	100	

Sample ID: SB13
Lab#: AC88606-011
Matrix: Soil

Collection Date: 12/3/2015
Receipt Date: 12/6/2015

% Solids SM2540G

Analyte	DF	Units	RL	Result
% Solids	1	percent		95

Ignitability (EPA 1030)

Analyte	DF	Units	RL	Result
Burning Rate (mm/sec)	1			NA
Flame Propagation (POS/NEG)	1			NA
Ignitability Screen (POS/NEG)	1			NEG

Mercury (TCLP) 7470A

Analyte	DF	Units	RL	Result
Mercury	1	mg/l	0.00070	ND

PAH Compounds 8270

Analyte	DF	Units	RL	Result
2-Methylnaphthalene	1	mg/kg	0.035	ND
Acenaphthene	1	mg/kg	0.035	ND
Acenaphthylene	1	mg/kg	0.035	ND
Anthracene	1	mg/kg	0.035	ND
Benzo[a]anthracene	1	mg/kg	0.035	ND
Benzo[a]pyrene	1	mg/kg	0.035	ND
Benzo[b]fluoranthene	1	mg/kg	0.035	ND
Benzo[g,h,i]perylene	1	mg/kg	0.035	ND
Benzo[k]fluoranthene	1	mg/kg	0.035	ND
Chrysene	1	mg/kg	0.035	ND
Dibenzo[a,h]anthracene	1	mg/kg	0.035	ND
Fluoranthene	1	mg/kg	0.035	ND
Fluorene	1	mg/kg	0.035	ND
Indeno[1,2,3-cd]pyrene	1	mg/kg	0.035	ND
Naphthalene	1	mg/kg	0.0088	ND
Phenanthrene	1	mg/kg	0.035	ND
Pyrene	1	mg/kg	0.035	ND

Surrogate	Conc.	Spike	Low Limit	High Limit	Recovery	Flags
Terphenyl-d14	44.25	50	30	130	89	
Phenol-d5	67.54	100	30	130	68	
Nitrobenzene-d5	34.29	50	30	130	69	
2-Fluorophenol	70.33	100	30	130	70	
2-Fluorobiphenyl	38.90	50	30	130	78	
2,4,6-Tribromophenol	88.58	100	30	130	89	

Paint Filter Test 9095A

Analyte	DF	Units	RL	Result
Paint Filter Test	1			NEG

PCB 8082

Analyte	DF	Units	RL	Result
Aroclor (Total)	1	mg/kg	0.026	ND
Aroclor-1016	1	mg/kg	0.026	ND
Aroclor-1221	1	mg/kg	0.026	ND
Aroclor-1232	1	mg/kg	0.026	ND
Aroclor-1242	1	mg/kg	0.026	ND
Aroclor-1248	1	mg/kg	0.026	ND
Aroclor-1254	1	mg/kg	0.026	ND
Aroclor-1260	1	mg/kg	0.026	ND
Aroclor-1262	1	mg/kg	0.026	ND
Aroclor-1268	1	mg/kg	0.026	ND

Surrogate	Conc.	Spike	Low Limit	High Limit	Recovery	Flags
TCMX-Surrogate	89.31	100	30	150	89	
TCMX-Surrogate	82.91	100	30	150	83	
DCB-Surrogate	81.33	100	30	150	81	
DCB-Surrogate	71.18	100	30	150	71	

pH 9040C/9045D

Analyte	DF	Units	RL	Result
pH	1	ph		7.7

Sample ID: SB13
Lab#: AC88606-011
Matrix: Soil

Collection Date: 12/3/2015
Receipt Date: 12/6/2015

Reactive Cyanide

Analyte	DF	Units	RL	Result
Cyanide (Reactive)	1	mg/kg	0.50	ND

Reactive Sulfide

Analyte	DF	Units	RL	Result
Sulfide (Reactive)	1	mg/kg	100	ND

TCLP Metals 6010

Analyte	DF	Units	RL	Result
Arsenic	1	mg/l	0.10	ND
Barium	**1**	**mg/l**	**0.25**	**0.32**
Cadmium	1	mg/l	0.050	ND
Chromium	1	mg/l	0.10	ND
Lead	1	mg/l	0.050	ND
Nickel	1	mg/l	0.10	ND
Selenium	1	mg/l	0.10	ND
Silver	1	mg/l	0.050	ND

Total PetroleumHydrocarbons8015B(C8-C40)

Analyte	DF	Units	RL	Result
Total Petroleum Hydrocarbons	1	mg/kg	63	ND

Volatile Organics (no search) 8260

Analyte	DF	Units	RL	Result
1,1,1-Trichloroethane	0.967	mg/kg	0.0020	ND
1,1,2,2-Tetrachloroethane	0.967	mg/kg	0.0020	ND
1,1,2-Trichloro-1,2,2-trifluoroethane	0.967	mg/kg	0.0020	ND
1,1,2-Trichloroethane	0.967	mg/kg	0.0020	ND
1,1-Dichloroethane	0.967	mg/kg	0.0020	ND
1,1-Dichloroethene	0.967	mg/kg	0.0020	ND
1,2,3-Trichlorobenzene	0.967	mg/kg	0.0020	ND
1,2,4-Trichlorobenzene	0.967	mg/kg	0.0020	ND
1,2-Dibromo-3-chloropropane	0.967	mg/kg	0.0020	ND
1,2-Dibromoethane	0.967	mg/kg	0.0020	ND
1,2-Dichlorobenzene	0.967	mg/kg	0.0020	ND
1,2-Dichloroethane	0.967	mg/kg	0.0010	ND
1,2-Dichloropropane	0.967	mg/kg	0.0020	ND
1,3-Dichlorobenzene	0.967	mg/kg	0.0020	ND
1,4-Dichlorobenzene	0.967	mg/kg	0.0020	ND
1,4-Dioxane	0.967	mg/kg	0.10	ND
2-Butanone	0.967	mg/kg	0.0020	ND
2-Hexanone	0.967	mg/kg	0.0020	ND
4-Methyl-2-pentanone	0.967	mg/kg	0.0020	ND
Acetone	0.967	mg/kg	0.010	ND
Benzene	0.967	mg/kg	0.0010	ND
Bromochloromethane	0.967	mg/kg	0.0020	ND
Bromodichloromethane	0.967	mg/kg	0.0020	ND
Bromoform	0.967	mg/kg	0.0020	ND
Bromomethane	0.967	mg/kg	0.0020	ND
Carbon disulfide	0.967	mg/kg	0.0020	ND
Carbon tetrachloride	0.967	mg/kg	0.0020	ND
Chlorobenzene	0.967	mg/kg	0.0020	ND
Chloroethane	0.967	mg/kg	0.0020	ND
Chloroform	0.967	mg/kg	0.0020	ND
Chloromethane	0.967	mg/kg	0.0020	ND
cis-1,2-Dichloroethene	0.967	mg/kg	0.0020	ND
cis-1,3-Dichloropropene	0.967	mg/kg	0.0020	ND
Cyclohexane	0.967	mg/kg	0.0020	ND
Dibromochloromethane	0.967	mg/kg	0.0020	ND
Dichlorodifluoromethane	0.967	mg/kg	0.0020	ND
Ethylbenzene	0.967	mg/kg	0.0010	ND
Isopropylbenzene	0.967	mg/kg	0.0010	ND
m&p-Xylenes	0.967	mg/kg	0.0010	ND
Methyl Acetate	0.967	mg/kg	0.0020	ND
Methylcyclohexane	0.967	mg/kg	0.0020	ND
Methylene chloride	**0.967**	**mg/kg**	**0.0020**	**0.0065**

NOTE: Soil Results are reported to Dry Weight

Sample ID: SB13 **Collection Date: 12/3/2015**
Lab#: AC88606-011 **Receipt Date: 12/6/2015**
Matrix: Soil

Methyl-t-butyl ether	0.967	mg/kg	0.0010	ND
o-Xylene	0.967	mg/kg	0.0010	ND
Styrene	0.967	mg/kg	0.0020	ND
Tetrachloroethene	0.967	mg/kg	0.0020	ND
Toluene	0.967	mg/kg	0.0010	ND
trans-1,2-Dichloroethene	0.967	mg/kg	0.0020	ND
trans-1,3-Dichloropropene	0.967	mg/kg	0.0020	ND
Trichloroethene	0.967	mg/kg	0.0020	ND
Trichlorofluoromethane	0.967	mg/kg	0.0020	ND
Vinyl chloride	0.967	mg/kg	0.0020	ND
Xylenes (Total)	0.967	mg/kg	0.0010	ND

Surrogate	Conc.	Spike	Low Limit	High Limit	Recovery	Flags
Toluene-d8	28.95	30	70	130	96	
Dibromofluoromethane	33.70	30	70	130	112	
Bromofluorobenzene	26.39	30	70	130	88	
1,2-Dichloroethane-d4	31.11	30	70	130	104	

Sample ID: SB14 | **Collection Date: 12/3/2015**
Lab#: AC88606-012 | **Receipt Date: 12/6/2015**
Matrix: Soil

% Solids SM2540G

Analyte	DF	Units	RL	Result
% Solids	1	percent		94

Ignitability (EPA 1030)

Analyte	DF	Units	RL	Result
Burning Rate (mm/sec)	1			NA
Flame Propagation (POS/NEG)	1			NA
Ignitability Screen (POS/NEG)	1			NEG

Mercury (TCLP) 7470A

Analyte	DF	Units	RL	Result
Mercury	1	mg/l	0.00070	ND

PAH Compounds 8270

Analyte	DF	Units	RL	Result
2-Methylnaphthalene	1	mg/kg	0.035	ND
Acenaphthene	1	mg/kg	0.035	ND
Acenaphthylene	1	mg/kg	0.035	ND
Anthracene	1	mg/kg	0.035	ND
Benzo[a]anthracene	1	mg/kg	0.035	ND
Benzo[a]pyrene	1	mg/kg	0.035	ND
Benzo[b]fluoranthene	1	mg/kg	0.035	ND
Benzo[g,h,i]perylene	1	mg/kg	0.035	ND
Benzo[k]fluoranthene	1	mg/kg	0.035	ND
Chrysene	1	mg/kg	0.035	ND
Dibenzo[a,h]anthracene	1	mg/kg	0.035	ND
Fluoranthene	1	mg/kg	0.035	ND
Fluorene	1	mg/kg	0.035	ND
Indeno[1,2,3-cd]pyrene	1	mg/kg	0.035	ND
Naphthalene	1	mg/kg	0.0089	ND
Phenanthrene	1	mg/kg	0.035	ND
Pyrene	1	mg/kg	0.035	ND

Surrogate	Conc.	Spike	Low Limit	High Limit	Recovery	Flags
Terphenyl-d14	42.26	50	30	130	85	
Phenol-d5	65.99	100	30	130	66	
Nitrobenzene-d5	34.78	50	30	130	70	
2-Fluorophenol	65.90	100	30	130	66	
2-Fluorobiphenyl	37.09	50	30	130	74	
2,4,6-Tribromophenol	88.66	100	30	130	89	

Paint Filter Test 9095A

Analyte	DF	Units	RL	Result
Paint Filter Test	1			NEG

PCB 8082

Analyte	DF	Units	RL	Result
Aroclor (Total)	1	mg/kg	0.027	ND
Aroclor-1016	1	mg/kg	0.027	ND
Aroclor-1221	1	mg/kg	0.027	ND
Aroclor-1232	1	mg/kg	0.027	ND
Aroclor-1242	1	mg/kg	0.027	ND
Aroclor-1248	1	mg/kg	0.027	ND
Aroclor-1254	1	mg/kg	0.027	ND
Aroclor-1260	1	mg/kg	0.027	ND
Aroclor-1262	1	mg/kg	0.027	ND
Aroclor-1268	1	mg/kg	0.027	ND

Surrogate	Conc.	Spike	Low Limit	High Limit	Recovery	Flags
TCMX-Surrogate	83.02	100	30	150	83	
TCMX-Surrogate	77.99	100	30	150	78	
DCB-Surrogate	75.40	100	30	150	75	
DCB-Surrogate	66.36	100	30	150	66	

pH 9040C/9045D

Analyte	DF	Units	RL	Result
pH	1	ph		8.5

Sample ID: SB14 | **Collection Date: 12/3/2015**
Lab#: AC88606-012 | **Receipt Date: 12/6/2015**
Matrix: Soil

Reactive Cyanide

Analyte	DF	Units	RL	Result
Cyanide (Reactive)	1	mg/kg	0.50	ND

Reactive Sulfide

Analyte	DF	Units	RL	Result
Sulfide (Reactive)	1	mg/kg	100	ND

TCLP Metals 6010

Analyte	DF	Units	RL	Result
Arsenic	1	mg/l	0.10	ND
Barium	**1**	**mg/l**	**0.25**	**0.29**
Cadmium	1	mg/l	0.050	ND
Chromium	1	mg/l	0.10	ND
Lead	1	mg/l	0.050	ND
Nickel	1	mg/l	0.10	ND
Selenium	1	mg/l	0.10	ND
Silver	1	mg/l	0.050	ND

Total PetroleumHydrocarbons8015B(C8-C40)

Analyte	DF	Units	RL	Result
Total Petroleum Hydrocarbons	1	mg/kg	64	ND

Volatile Organics (no search) 8260

Analyte	DF	Units	RL	Result
1,1,1-Trichloroethane	1	mg/kg	0.0021	ND
1,1,2,2-Tetrachloroethane	1	mg/kg	0.0021	ND
1,1,2-Trichloro-1,2,2-trifluoroethane	1	mg/kg	0.0021	ND
1,1,2-Trichloroethane	1	mg/kg	0.0021	ND
1,1-Dichloroethane	1	mg/kg	0.0021	ND
1,1-Dichloroethene	1	mg/kg	0.0021	ND
1,2,3-Trichlorobenzene	1	mg/kg	0.0021	ND
1,2,4-Trichlorobenzene	1	mg/kg	0.0021	ND
1,2-Dibromo-3-chloropropane	1	mg/kg	0.0021	ND
1,2-Dibromoethane	1	mg/kg	0.0021	ND
1,2-Dichlorobenzene	1	mg/kg	0.0021	ND
1,2-Dichloroethane	1	mg/kg	0.0011	ND
1,2-Dichloropropane	1	mg/kg	0.0021	ND
1,3-Dichlorobenzene	1	mg/kg	0.0021	ND
1,4-Dichlorobenzene	1	mg/kg	0.0021	ND
1,4-Dioxane	1	mg/kg	0.11	ND
2-Butanone	1	mg/kg	0.0021	ND
2-Hexanone	1	mg/kg	0.0021	ND
4-Methyl-2-pentanone	1	mg/kg	0.0021	ND
Acetone	1	mg/kg	0.011	ND
Benzene	1	mg/kg	0.0011	ND
Bromochloromethane	1	mg/kg	0.0021	ND
Bromodichloromethane	1	mg/kg	0.0021	ND
Bromoform	1	mg/kg	0.0021	ND
Bromomethane	1	mg/kg	0.0021	ND
Carbon disulfide	1	mg/kg	0.0021	ND
Carbon tetrachloride	1	mg/kg	0.0021	ND
Chlorobenzene	1	mg/kg	0.0021	ND
Chloroethane	1	mg/kg	0.0021	ND
Chloroform	1	mg/kg	0.0021	ND
Chloromethane	1	mg/kg	0.0021	ND
cis-1,2-Dichloroethene	1	mg/kg	0.0021	ND
cis-1,3-Dichloropropene	1	mg/kg	0.0021	ND
Cyclohexane	1	mg/kg	0.0021	ND
Dibromochloromethane	1	mg/kg	0.0021	ND
Dichlorodifluoromethane	1	mg/kg	0.0021	ND
Ethylbenzene	1	mg/kg	0.0011	ND
Isopropylbenzene	1	mg/kg	0.0011	ND
m&p-Xylenes	1	mg/kg	0.0011	ND
Methyl Acetate	1	mg/kg	0.0021	ND
Methylcyclohexane	1	mg/kg	0.0021	ND
Methylene chloride	1	mg/kg	0.0021	ND

Sample ID: SB14
Lab#: AC88606-012
Matrix: Soil

Collection Date: 12/3/2015
Receipt Date: 12/6/2015

Methyl-t-butyl ether	1	mg/kg	0.0011	ND
o-Xylene	1	mg/kg	0.0011	ND
Styrene	1	mg/kg	0.0021	ND
Tetrachloroethene	1	mg/kg	0.0021	ND
Toluene	1	mg/kg	0.0011	ND
trans-1,2-Dichloroethene	1	mg/kg	0.0021	ND
trans-1,3-Dichloropropene	1	mg/kg	0.0021	ND
Trichloroethene	1	mg/kg	0.0021	ND
Trichlorofluoromethane	1	mg/kg	0.0021	ND
Vinyl chloride	1	mg/kg	0.0021	ND
Xylenes (Total)	1	mg/kg	0.0011	ND

Surrogate	Conc.	Spike	Low Limit	High Limit	Recovery	Flags
Toluene-d8	27.21	30	70	130	91	
Dibromofluoromethane	32.20	30	70	130	107	
Bromofluorobenzene	27.12	30	70	130	90	
1,2-Dichloroethane-d4	31.02	30	70	130	103	

Sample ID: SB15
Lab#: AC88606-013
Matrix: Soil

Collection Date: 12/3/2015
Receipt Date: 12/6/2015

% Solids SM2540G

Analyte	DF	Units	RL	Result
% Solids	1	percent		95

Ignitability (EPA 1030)

Analyte	DF	Units	RL	Result
Burning Rate (mm/sec)	1			NA
Flame Propagation (POS/NEG)	1			NA
Ignitability Screen (POS/NEG)	1			NEG

Mercury (TCLP) 7470A

Analyte	DF	Units	RL	Result
Mercury	1	mg/l	0.00070	ND

PAH Compounds 8270

Analyte	DF	Units	RL	Result
2-Methylnaphthalene	1	mg/kg	0.035	ND
Acenaphthene	1	mg/kg	0.035	ND
Acenaphthylene	1	mg/kg	0.035	0.10
Anthracene	1	mg/kg	0.035	0.062
Benzo[a]anthracene	1	mg/kg	0.035	0.48
Benzo[a]pyrene	1	mg/kg	0.035	0.61
Benzo[b]fluoranthene	1	mg/kg	0.035	0.72
Benzo[g,h,i]perylene	1	mg/kg	0.035	0.51
Benzo[k]fluoranthene	1	mg/kg	0.035	0.21
Chrysene	1	mg/kg	0.035	0.51
Dibenzo[a,h]anthracene	1	mg/kg	0.035	0.11
Fluoranthene	1	mg/kg	0.035	0.45
Fluorene	1	mg/kg	0.035	ND
Indeno[1,2,3-cd]pyrene	1	mg/kg	0.035	0.40
Naphthalene	1	mg/kg	0.0088	0.019
Phenanthrene	1	mg/kg	0.035	0.15
Pyrene	1	mg/kg	0.035	0.78

Surrogate	Conc.	Spike	Low Limit	High Limit	Recovery	Flags
Terphenyl-d14	46.85	50	30	130	94	
Phenol-d5	74.09	100	30	130	74	
Nitrobenzene-d5	41.18	50	30	130	82	
2-Fluorophenol	68.35	100	30	130	68	
2-Fluorobiphenyl	44.49	50	30	130	89	
2,4,6-Tribromophenol	42.15	100	30	130	42	

Paint Filter Test 9095A

Analyte	DF	Units	RL	Result
Paint Filter Test	1			NEG

PCB 8082

Analyte	DF	Units	RL	Result
Aroclor (Total)	1	mg/kg	0.026	ND
Aroclor-1016	1	mg/kg	0.026	ND
Aroclor-1221	1	mg/kg	0.026	ND
Aroclor-1232	1	mg/kg	0.026	ND
Aroclor-1242	1	mg/kg	0.026	ND
Aroclor-1248	1	mg/kg	0.026	ND
Aroclor-1254	1	mg/kg	0.026	ND
Aroclor-1260	1	mg/kg	0.026	ND
Aroclor-1262	1	mg/kg	0.026	ND
Aroclor-1268	1	mg/kg	0.026	ND

Surrogate	Conc.	Spike	Low Limit	High Limit	Recovery	Flags
TCMX-Surrogate	81.77	100	30	150	82	
TCMX-Surrogate	75.43	100	30	150	75	
DCB-Surrogate	75.15	100	30	150	75	
DCB-Surrogate	65.61	100	30	150	66	

pH 9040C/9045D

Analyte	DF	Units	RL	Result
pH	1	ph		12

Sample ID: SB15
Lab#: AC88606-013
Matrix: Soil

Collection Date: 12/3/2015
Receipt Date: 12/6/2015

Reactive Cyanide

Analyte	DF	Units	RL	Result
Cyanide (Reactive)	1	mg/kg	0.50	ND

Reactive Sulfide

Analyte	DF	Units	RL	Result
Sulfide (Reactive)	1	mg/kg	100	ND

TCLP Metals 6010

Analyte	DF	Units	RL	Result
Arsenic	1	mg/l	0.10	ND
Barium	**1**	**mg/l**	**0.25**	**0.41**
Cadmium	1	mg/l	0.050	ND
Chromium	1	mg/l	0.10	ND
Lead	1	mg/l	0.050	ND
Nickel	1	mg/l	0.10	ND
Selenium	1	mg/l	0.10	ND
Silver	1	mg/l	0.050	ND

Total PetroleumHydrocarbons8015B(C8-C40)

Analyte	DF	Units	RL	Result
Total Petroleum Hydrocarbons	**1**	**mg/kg**	**63**	**81**

Volatile Organics (no search) 8260

Analyte	DF	Units	RL	Result
1,1,1-Trichloroethane	0.945	mg/kg	0.0020	ND
1,1,2,2-Tetrachloroethane	0.945	mg/kg	0.0020	ND
1,1,2-Trichloro-1,2,2-trifluoroethane	0.945	mg/kg	0.0020	ND
1,1,2-Trichloroethane	0.945	mg/kg	0.0020	ND
1,1-Dichloroethane	0.945	mg/kg	0.0020	ND
1,1-Dichloroethene	0.945	mg/kg	0.0020	ND
1,2,3-Trichlorobenzene	0.945	mg/kg	0.0020	ND
1,2,4-Trichlorobenzene	0.945	mg/kg	0.0020	ND
1,2-Dibromo-3-chloropropane	0.945	mg/kg	0.0020	ND
1,2-Dibromoethane	0.945	mg/kg	0.0020	ND
1,2-Dichlorobenzene	0.945	mg/kg	0.0020	ND
1,2-Dichloroethane	0.945	mg/kg	0.00099	ND
1,2-Dichloropropane	0.945	mg/kg	0.0020	ND
1,3-Dichlorobenzene	0.945	mg/kg	0.0020	ND
1,4-Dichlorobenzene	0.945	mg/kg	0.0020	ND
1,4-Dioxane	0.945	mg/kg	0.099	ND
2-Butanone	0.945	mg/kg	0.0020	ND
2-Hexanone	0.945	mg/kg	0.0020	ND
4-Methyl-2-pentanone	0.945	mg/kg	0.0020	ND
Acetone	0.945	mg/kg	0.0099	ND
Benzene	0.945	mg/kg	0.00099	ND
Bromochloromethane	0.945	mg/kg	0.0020	ND
Bromodichloromethane	0.945	mg/kg	0.0020	ND
Bromoform	0.945	mg/kg	0.0020	ND
Bromomethane	0.945	mg/kg	0.0020	ND
Carbon disulfide	0.945	mg/kg	0.0020	ND
Carbon tetrachloride	0.945	mg/kg	0.0020	ND
Chlorobenzene	0.945	mg/kg	0.0020	ND
Chloroethane	0.945	mg/kg	0.0020	ND
Chloroform	0.945	mg/kg	0.0020	ND
Chloromethane	0.945	mg/kg	0.0020	ND
cis-1,2-Dichloroethene	0.945	mg/kg	0.0020	ND
cis-1,3-Dichloropropene	0.945	mg/kg	0.0020	ND
Cyclohexane	0.945	mg/kg	0.0020	ND
Dibromochloromethane	0.945	mg/kg	0.0020	ND
Dichlorodifluoromethane	0.945	mg/kg	0.0020	ND
Ethylbenzene	0.945	mg/kg	0.00099	ND
Isopropylbenzene	0.945	mg/kg	0.00099	ND
m&p-Xylenes	0.945	mg/kg	0.00099	ND
Methyl Acetate	0.945	mg/kg	0.0020	ND
Methylcyclohexane	0.945	mg/kg	0.0020	ND
Methylene chloride	0.945	mg/kg	0.0020	ND

Sample ID: SB15 **Collection Date: 12/3/2015**
Lab#: AC88606-013 **Receipt Date: 12/6/2015**
Matrix: Soil

Methyl-t-butyl ether	0.945	mg/kg	0.00099	ND
o-Xylene	0.945	mg/kg	0.00099	ND
Styrene	0.945	mg/kg	0.0020	ND
Tetrachloroethene	0.945	mg/kg	0.0020	ND
Toluene	0.945	mg/kg	0.00099	ND
trans-1,2-Dichloroethene	0.945	mg/kg	0.0020	ND
trans-1,3-Dichloropropene	0.945	mg/kg	0.0020	ND
Trichloroethene	0.945	mg/kg	0.0020	ND
Trichlorofluoromethane	0.945	mg/kg	0.0020	ND
Vinyl chloride	0.945	mg/kg	0.0020	ND
Xylenes (Total)	0.945	mg/kg	0.00099	ND

Surrogate	Conc.	Spike	Low Limit	High Limit	Recovery	Flags
Toluene-d8	27.04	30	70	130	90	
Dibromofluoromethane	35.18	30	70	130	117	
Bromofluorobenzene	27.16	30	70	130	91	
1,2-Dichloroethane-d4	31.19	30	70	130	104	

Sample ID: SB16
Lab#: AC88606-014
Matrix: Soil

Collection Date: 12/3/2015
Receipt Date: 12/6/2015

% Solids SM2540G

Analyte	DF	Units	RL	Result
%Solids	1	percent		95

Ignitability (EPA 1030)

Analyte	DF	Units	RL	Result
Burning Rate (mm/sec)	1			NA
Flame Propagation (POS/NEG)	1			NA
Ignitability Screen (POS/NEG)	1			NEG

Mercury (TCLP) 7470A

Analyte	DF	Units	RL	Result
Mercury	1	mg/l	0.00070	ND

PAH Compounds 8270

Analyte	DF	Units	RL	Result
2-Methylnaphthalene	1	mg/kg	0.035	ND
Acenaphthene	1	mg/kg	0.035	ND
Acenaphthylene	1	mg/kg	0.035	ND
Anthracene	1	mg/kg	0.035	ND
Benzo[a]anthracene	1	mg/kg	0.035	ND
Benzo[a]pyrene	1	mg/kg	0.035	ND
Benzo[b]fluoranthene	1	mg/kg	0.035	ND
Benzo[g,h,i]perylene	1	mg/kg	0.035	ND
Benzo[k]fluoranthene	1	mg/kg	0.035	ND
Chrysene	1	mg/kg	0.035	ND
Dibenzo[a,h]anthracene	1	mg/kg	0.035	ND
Fluoranthene	1	mg/kg	0.035	ND
Fluorene	1	mg/kg	0.035	ND
Indeno[1,2,3-cd]pyrene	1	mg/kg	0.035	ND
Naphthalene	1	mg/kg	0.0088	ND
Phenanthrene	1	mg/kg	0.035	ND
Pyrene	1	mg/kg	0.035	ND

Surrogate	Conc.	Spike	Low Limit	High Limit	Recovery	Flags
Terphenyl-d14	36.79	50	30	130	74	
Phenol-d5	50.56	100	30	130	51	
Nitrobenzene-d5	27.15	50	30	130	54	
2-Fluorophenol	53.17	100	30	130	53	
2-Fluorobiphenyl	30.02	50	30	130	60	
2,4,6-Tribromophenol	73.54	100	30	130	74	

Paint Filter Test 9095A

Analyte	DF	Units	RL	Result
Paint Filter Test	1			NEG

PCB 8082

Analyte	DF	Units	RL	Result
Aroclor (Total)	1	mg/kg	0.026	ND
Aroclor-1016	1	mg/kg	0.026	ND
Aroclor-1221	1	mg/kg	0.026	ND
Aroclor-1232	1	mg/kg	0.026	ND
Aroclor-1242	1	mg/kg	0.026	ND
Aroclor-1248	1	mg/kg	0.026	ND
Aroclor-1254	1	mg/kg	0.026	ND
Aroclor-1260	1	mg/kg	0.026	ND
Aroclor-1262	1	mg/kg	0.026	ND
Aroclor-1268	1	mg/kg	0.026	ND

Surrogate	Conc.	Spike	Low Limit	High Limit	Recovery	Flags
TCMX-Surrogate	79.43	100	30	150	79	
TCMX-Surrogate	75.94	100	30	150	76	
DCB-Surrogate	74.66	100	30	150	75	
DCB-Surrogate	65.86	100	30	150	66	

pH 9040C/9045D

Analyte	DF	Units	RL	Result
pH	1	ph		9.9

Sample ID: SB16
Lab#: AC88606-014
Matrix: Soil

Collection Date: 12/3/2015
Receipt Date: 12/6/2015

Reactive Cyanide

Analyte	DF	Units	RL	Result
Cyanide (Reactive)	1	mg/kg	0.50	ND

Reactive Sulfide

Analyte	DF	Units	RL	Result
Sulfide (Reactive)	1	mg/kg	100	ND

TCLP Metals 6010

Analyte	DF	Units	RL	Result
Arsenic	1	mg/l	0.10	ND
Barium	**1**	**mg/l**	**0.25**	**0.36**
Cadmium	1	mg/l	0.050	ND
Chromium	1	mg/l	0.10	ND
Lead	1	mg/l	0.050	ND
Nickel	1	mg/l	0.10	ND
Selenium	1	mg/l	0.10	ND
Silver	1	mg/l	0.050	ND

Total PetroleumHydrocarbons8015B(C8-C40)

Analyte	DF	Units	RL	Result
Total Petroleum Hydrocarbons	1	mg/kg	63	ND

Volatile Organics (no search) 8260

Analyte	DF	Units	RL	Result
1,1,1-Trichloroethane	0.943	mg/kg	0.0020	ND
1,1,2,2-Tetrachloroethane	0.943	mg/kg	0.0020	ND
1,1,2-Trichloro-1,2,2-trifluoroethane	0.943	mg/kg	0.0020	ND
1,1,2-Trichloroethane	0.943	mg/kg	0.0020	ND
1,1-Dichloroethane	0.943	mg/kg	0.0020	ND
1,1-Dichloroethene	0.943	mg/kg	0.0020	ND
1,2,3-Trichlorobenzene	0.943	mg/kg	0.0020	ND
1,2,4-Trichlorobenzene	0.943	mg/kg	0.0020	ND
1,2-Dibromo-3-chloropropane	0.943	mg/kg	0.0020	ND
1,2-Dibromoethane	0.943	mg/kg	0.0020	ND
1,2-Dichlorobenzene	0.943	mg/kg	0.0020	ND
1,2-Dichloroethane	0.943	mg/kg	0.00099	ND
1,2-Dichloropropane	0.943	mg/kg	0.0020	ND
1,3-Dichlorobenzene	0.943	mg/kg	0.0020	ND
1,4-Dichlorobenzene	0.943	mg/kg	0.0020	ND
1,4-Dioxane	0.943	mg/kg	0.099	ND
2-Butanone	0.943	mg/kg	0.0020	ND
2-Hexanone	0.943	mg/kg	0.0020	ND
4-Methyl-2-pentanone	0.943	mg/kg	0.0020	ND
Acetone	0.943	mg/kg	0.0099	ND
Benzene	0.943	mg/kg	0.00099	ND
Bromochloromethane	0.943	mg/kg	0.0020	ND
Bromodichloromethane	0.943	mg/kg	0.0020	ND
Bromoform	0.943	mg/kg	0.0020	ND
Bromomethane	0.943	mg/kg	0.0020	ND
Carbon disulfide	0.943	mg/kg	0.0020	ND
Carbon tetrachloride	0.943	mg/kg	0.0020	ND
Chlorobenzene	0.943	mg/kg	0.0020	ND
Chloroethane	0.943	mg/kg	0.0020	ND
Chloroform	0.943	mg/kg	0.0020	ND
Chloromethane	0.943	mg/kg	0.0020	ND
cis-1,2-Dichloroethene	0.943	mg/kg	0.0020	ND
cis-1,3-Dichloropropene	0.943	mg/kg	0.0020	ND
Cyclohexane	0.943	mg/kg	0.0020	ND
Dibromochloromethane	0.943	mg/kg	0.0020	ND
Dichlorodifluoromethane	0.943	mg/kg	0.0020	ND
Ethylbenzene	0.943	mg/kg	0.00099	ND
Isopropylbenzene	0.943	mg/kg	0.00099	ND
m&p-Xylenes	0.943	mg/kg	0.00099	ND
Methyl Acetate	0.943	mg/kg	0.0020	ND
Methylcyclohexane	0.943	mg/kg	0.0020	ND
Methylene chloride	0.943	mg/kg	0.0020	ND

NOTE: Soil Results are reported to Dry Weight

Sample ID: SB16
Lab#: AC88606-014
Matrix: Soil

Collection Date: 12/3/2015
Receipt Date: 12/6/2015

Methyl-t-butyl ether	0.943	mg/kg	0.00099	ND
o-Xylene	0.943	mg/kg	0.00099	ND
Styrene	0.943	mg/kg	0.0020	ND
Tetrachloroethene	0.943	mg/kg	0.0020	ND
Toluene	0.943	mg/kg	0.00099	ND
trans-1,2-Dichloroethene	0.943	mg/kg	0.0020	ND
trans-1,3-Dichloropropene	0.943	mg/kg	0.0020	ND
Trichloroethene	0.943	mg/kg	0.0020	ND
Trichlorofluoromethane	0.943	mg/kg	0.0020	ND
Vinyl chloride	0.943	mg/kg	0.0020	ND
Xylenes (Total)	0.943	mg/kg	0.00099	ND

Surrogate	Conc.	Spike	Low Limit	High Limit	Recovery	Flags
Toluene-d8	29.09	30	70	130	97	
Dibromofluoromethane	35.61	30	70	130	119	
Bromofluorobenzene	28.10	30	70	130	94	
1,2-Dichloroethane-d4	33.87	30	70	130	113	

Sample ID: SB17
Lab#: AC88606-015
Matrix: Soil

Collection Date: 12/3/2015
Receipt Date: 12/6/2015

% Solids SM2540G

Analyte	DF	Units	RL	Result
%Solids	**1**	**percent**		**94**

Ignitability (EPA 1030)

Analyte	DF	Units	RL	Result
Burning Rate (mm/sec)	**1**			**NA**
Flame Propagation (POS/NEG)	**1**			**NA**
Ignitability Screen (POS/NEG)	**1**			**NEG**

Mercury (TCLP) 7470A

Analyte	DF	Units	RL	Result
Mercury	1	mg/l	0.00070	ND

PAH Compounds 8270

Analyte	DF	Units	RL	Result
2-Methylnaphthalene	1	mg/kg	0.035	ND
Acenaphthene	1	mg/kg	0.035	ND
Acenaphthylene	1	mg/kg	0.035	ND
Anthracene	1	mg/kg	0.035	ND
Benzo[a]anthracene	**1**	**mg/kg**	**0.035**	**0.053**
Benzo[a]pyrene	**1**	**mg/kg**	**0.035**	**0.051**
Benzo[b]fluoranthene	**1**	**mg/kg**	**0.035**	**0.062**
Benzo[g,h,i]perylene	1	mg/kg	0.035	ND
Benzo[k]fluoranthene	1	mg/kg	0.035	ND
Chrysene	**1**	**mg/kg**	**0.035**	**0.054**
Dibenzo[a,h]anthracene	1	mg/kg	0.035	ND
Fluoranthene	1	mg/kg	0.035	ND
Fluorene	1	mg/kg	0.035	ND
Indeno[1,2,3-cd]pyrene	1	mg/kg	0.035	ND
Naphthalene	1	mg/kg	0.0089	ND
Phenanthrene	1	mg/kg	0.035	ND
Pyrene	**1**	**mg/kg**	**0.035**	**0.041**

Surrogate	Conc.	Spike	Low Limit	High Limit	Recovery	Flags
Terphenyl-d14	46.46	50	30	130	93	
Phenol-d5	74.15	100	30	130	74	
Nitrobenzene-d5	39.75	50	30	130	80	
2-Fluorophenol	77.28	100	30	130	77	
2-Fluorobiphenyl	41.62	50	30	130	83	
2,4,6-Tribromophenol	97.75	100	30	130	98	

Paint Filter Test 9095A

Analyte	DF	Units	RL	Result
Paint Filter Test	**1**			**NEG**

PCB 8082

Analyte	DF	Units	RL	Result
Aroclor (Total)	1	mg/kg	0.027	ND
Aroclor-1016	1	mg/kg	0.027	ND
Aroclor-1221	1	mg/kg	0.027	ND
Aroclor-1232	1	mg/kg	0.027	ND
Aroclor-1242	1	mg/kg	0.027	ND
Aroclor-1248	1	mg/kg	0.027	ND
Aroclor-1254	1	mg/kg	0.027	ND
Aroclor-1260	1	mg/kg	0.027	ND
Aroclor-1262	1	mg/kg	0.027	ND
Aroclor-1268	1	mg/kg	0.027	ND

Surrogate	Conc.	Spike	Low Limit	High Limit	Recovery	Flags
TCMX-Surrogate	83.39	100	30	150	83	
TCMX-Surrogate	77.81	100	30	150	78	
DCB-Surrogate	77.74	100	30	150	78	
DCB-Surrogate	68.28	100	30	150	68	

pH 9040C/9045D

Analyte	DF	Units	RL	Result
pH	**1**	**ph**		**8.1**

Sample ID: SB17
Lab#: AC88606-015
Matrix: Soil

Collection Date: 12/3/2015
Receipt Date: 12/6/2015

Reactive Cyanide

Analyte	DF	Units	RL	Result
Cyanide (Reactive)	1	mg/kg	0.50	ND

Reactive Sulfide

Analyte	DF	Units	RL	Result
Sulfide (Reactive)	1	mg/kg	100	ND

TCLP Metals 6010

Analyte	DF	Units	RL	Result
Arsenic	1	mg/l	0.10	ND
Barium	1	mg/l	0.25	ND
Cadmium	1	mg/l	0.050	ND
Chromium	1	mg/l	0.10	ND
Lead	1	mg/l	0.050	ND
Nickel	1	mg/l	0.10	ND
Selenium	1	mg/l	0.10	ND
Silver	1	mg/l	0.050	ND

Total PetroleumHydrocarbons8015B(C8-C40)

Analyte	DF	Units	RL	Result
Total Petroleum Hydrocarbons	1	mg/kg	64	ND

Volatile Organics (no search) 8260

Analyte	DF	Units	RL	Result
1,1,1-Trichloroethane	0.977	mg/kg	0.0021	ND
1,1,2,2-Tetrachloroethane	0.977	mg/kg	0.0021	ND
1,1,2-Trichloro-1,2,2-trifluoroethane	0.977	mg/kg	0.0021	ND
1,1,2-Trichloroethane	0.977	mg/kg	0.0021	ND
1,1-Dichloroethane	0.977	mg/kg	0.0021	ND
1,1-Dichloroethene	0.977	mg/kg	0.0021	ND
1,2,3-Trichlorobenzene	0.977	mg/kg	0.0021	ND
1,2,4-Trichlorobenzene	0.977	mg/kg	0.0021	ND
1,2-Dibromo-3-chloropropane	0.977	mg/kg	0.0021	ND
1,2-Dibromoethane	0.977	mg/kg	0.0021	ND
1,2-Dichlorobenzene	0.977	mg/kg	0.0021	ND
1,2-Dichloroethane	0.977	mg/kg	0.0010	ND
1,2-Dichloropropane	0.977	mg/kg	0.0021	ND
1,3-Dichlorobenzene	0.977	mg/kg	0.0021	ND
1,4-Dichlorobenzene	0.977	mg/kg	0.0021	ND
1,4-Dioxane	0.977	mg/kg	0.10	ND
2-Butanone	0.977	mg/kg	0.0021	ND
2-Hexanone	0.977	mg/kg	0.0021	ND
4-Methyl-2-pentanone	0.977	mg/kg	0.0021	ND
Acetone	0.977	mg/kg	0.010	ND
Benzene	0.977	mg/kg	0.0010	ND
Bromochloromethane	0.977	mg/kg	0.0021	ND
Bromodichloromethane	0.977	mg/kg	0.0021	ND
Bromoform	0.977	mg/kg	0.0021	ND
Bromomethane	0.977	mg/kg	0.0021	ND
Carbon disulfide	0.977	mg/kg	0.0021	ND
Carbon tetrachloride	0.977	mg/kg	0.0021	ND
Chlorobenzene	0.977	mg/kg	0.0021	ND
Chloroethane	0.977	mg/kg	0.0021	ND
Chloroform	0.977	mg/kg	0.0021	ND
Chloromethane	0.977	mg/kg	0.0021	ND
cis-1,2-Dichloroethene	0.977	mg/kg	0.0021	ND
cis-1,3-Dichloropropene	0.977	mg/kg	0.0021	ND
Cyclohexane	0.977	mg/kg	0.0021	ND
Dibromochloromethane	0.977	mg/kg	0.0021	ND
Dichlorodifluoromethane	0.977	mg/kg	0.0021	ND
Ethylbenzene	0.977	mg/kg	0.0010	ND
Isopropylbenzene	0.977	mg/kg	0.0010	ND
m&p-Xylenes	0.977	mg/kg	0.0010	ND
Methyl Acetate	0.977	mg/kg	0.0021	ND
Methylcyclohexane	0.977	mg/kg	0.0021	ND
Methylene chloride	0.977	mg/kg	0.0021	ND

NOTE: Soil Results are reported to Dry Weight

Sample ID: SB17
Lab#: AC88606-015
Matrix: Soil

Collection Date: 12/3/2015
Receipt Date: 12/6/2015

Methyl-t-butyl ether	0.977	mg/kg	0.0010	ND
o-Xylene	0.977	mg/kg	0.0010	ND
Styrene	0.977	mg/kg	0.0021	ND
Tetrachloroethene	0.977	mg/kg	0.0021	ND
Toluene	0.977	mg/kg	0.0010	ND
trans-1,2-Dichloroethene	0.977	mg/kg	0.0021	ND
trans-1,3-Dichloropropene	0.977	mg/kg	0.0021	ND
Trichloroethene	0.977	mg/kg	0.0021	ND
Trichlorofluoromethane	0.977	mg/kg	0.0021	ND
Vinyl chloride	0.977	mg/kg	0.0021	ND
Xylenes (Total)	0.977	mg/kg	0.0010	ND

Surrogate	Conc.	Spike	Low Limit	High Limit	Recovery	Flags
Toluene-d8	27.33	30	70	130	91	
Dibromofluoromethane	36.29	30	70	130	121	
Bromofluorobenzene	30.83	30	70	130	103	
1,2-Dichloroethane-d4	32.92	30	70	130	110	

Sample ID: SB19
Lab#: AC88606-016
Matrix: Soil

Collection Date: 12/3/2015
Receipt Date: 12/6/2015

% Solids SM2540G

Analyte	DF	Units	RL	Result
% Solids	1	percent		88

Ignitability (EPA 1030)

Analyte	DF	Units	RL	Result
Burning Rate (mm/sec)	1			NA
Flame Propagation (POS/NEG)	1			NA
Ignitability Screen (POS/NEG)	1			NEG

Mercury (TCLP) 7470A

Analyte	DF	Units	RL	Result
Mercury	1	mg/l	0.00070	ND

PAH Compounds 8270

Analyte	DF	Units	RL	Result
2-Methylnaphthalene	1	mg/kg	0.038	ND
Acenaphthene	1	mg/kg	0.038	ND
Acenaphthylene	1	mg/kg	0.038	ND
Anthracene	1	mg/kg	0.038	0.044
Benzo[a]anthracene	1	mg/kg	0.038	0.21
Benzo[a]pyrene	1	mg/kg	0.038	0.17
Benzo[b]fluoranthene	1	mg/kg	0.038	0.22
Benzo[g,h,i]perylene	1	mg/kg	0.038	0.13
Benzo[k]fluoranthene	1	mg/kg	0.038	0.084
Chrysene	1	mg/kg	0.038	0.19
Dibenzo[a,h]anthracene	1	mg/kg	0.038	0.044
Fluoranthene	1	mg/kg	0.038	0.33
Fluorene	1	mg/kg	0.038	ND
Indeno[1,2,3-cd]pyrene	1	mg/kg	0.038	0.11
Naphthalene	1	mg/kg	0.0095	ND
Phenanthrene	1	mg/kg	0.038	0.17
Pyrene	1	mg/kg	0.038	0.35

Surrogate	Conc.	Spike	Low Limit	High Limit	Recovery	Flags
Terphenyl-d14	44.32	50	30	130	89	
Phenol-d5	71.18	100	30	130	71	
Nitrobenzene-d5	41.71	50	30	130	83	
2-Fluorophenol	73.23	100	30	130	73	
2-Fluorobiphenyl	42.05	50	30	130	84	
2,4,6-Tribromophenol	79.66	100	30	130	80	

Paint Filter Test 9095A

Analyte	DF	Units	RL	Result
Paint Filter Test	1			NEG

PCB 8082

Analyte	DF	Units	RL	Result
Aroclor (Total)	1	mg/kg	0.028	ND
Aroclor-1016	1	mg/kg	0.028	ND
Aroclor-1221	1	mg/kg	0.028	ND
Aroclor-1232	1	mg/kg	0.028	ND
Aroclor-1242	1	mg/kg	0.028	ND
Aroclor-1248	1	mg/kg	0.028	ND
Aroclor-1254	1	mg/kg	0.028	ND
Aroclor-1260	1	mg/kg	0.028	ND
Aroclor-1262	1	mg/kg	0.028	ND
Aroclor-1268	1	mg/kg	0.028	ND

Surrogate	Conc.	Spike	Low Limit	High Limit	Recovery	Flags
TCMX-Surrogate	77.75	100	30	150	78	
TCMX-Surrogate	68.59	100	30	150	69	
DCB-Surrogate	63.22	100	30	150	63	
DCB-Surrogate	51.30	100	30	150	51	

pH 9040C/9045D

Analyte	DF	Units	RL	Result
pH	1	ph		11

Sample ID: SB19
Lab#: AC88606-016
Matrix: Soil

Collection Date: 12/3/2015
Receipt Date: 12/6/2015

Reactive Cyanide

Analyte	DF	Units	RL	Result
Cyanide (Reactive)	1	mg/kg	0.50	ND

Reactive Sulfide

Analyte	DF	Units	RL	Result
Sulfide (Reactive)	1	mg/kg	100	ND

TCLP Metals 6010

Analyte	DF	Units	RL	Result
Arsenic	1	mg/l	0.10	ND
Barium	**1**	**mg/l**	**0.25**	**0.39**
Cadmium	1	mg/l	0.050	ND
Chromium	1	mg/l	0.10	ND
Lead	**1**	**mg/l**	**0.050**	**0.17**
Nickel	1	mg/l	0.10	ND
Selenium	1	mg/l	0.10	ND
Silver	1	mg/l	0.050	ND

Total PetroleumHydrocarbons8015B(C8-C40)

Analyte	DF	Units	RL	Result
Total Petroleum Hydrocarbons	**1**	**mg/kg**	**68**	**280**

Volatile Organics (no search) 8260

Analyte	DF	Units	RL	Result
1,1,1-Trichloroethane	1	mg/kg	0.0023	ND
1,1,2,2-Tetrachloroethane	1	mg/kg	0.0023	ND
1,1,2-Trichloro-1,2,2-trifluoroethane	1	mg/kg	0.0023	ND
1,1,2-Trichloroethane	1	mg/kg	0.0023	ND
1,1-Dichloroethane	1	mg/kg	0.0023	ND
1,1-Dichloroethene	1	mg/kg	0.0023	ND
1,2,3-Trichlorobenzene	1	mg/kg	0.0023	ND
1,2,4-Trichlorobenzene	1	mg/kg	0.0023	ND
1,2-Dibromo-3-chloropropane	1	mg/kg	0.0023	ND
1,2-Dibromoethane	1	mg/kg	0.0023	ND
1,2-Dichlorobenzene	1	mg/kg	0.0023	ND
1,2-Dichloroethane	1	mg/kg	0.0011	ND
1,2-Dichloropropane	1	mg/kg	0.0023	ND
1,3-Dichlorobenzene	1	mg/kg	0.0023	ND
1,4-Dichlorobenzene	1	mg/kg	0.0023	ND
1,4-Dioxane	1	mg/kg	0.11	ND
2-Butanone	1	mg/kg	0.0023	ND
2-Hexanone	1	mg/kg	0.0023	ND
4-Methyl-2-pentanone	1	mg/kg	0.0023	ND
Acetone	1	mg/kg	0.011	ND
Benzene	1	mg/kg	0.0011	ND
Bromochloromethane	1	mg/kg	0.0023	ND
Bromodichloromethane	1	mg/kg	0.0023	ND
Bromoform	1	mg/kg	0.0023	ND
Bromomethane	1	mg/kg	0.0023	ND
Carbon disulfide	1	mg/kg	0.0023	ND
Carbon tetrachloride	1	mg/kg	0.0023	ND
Chlorobenzene	1	mg/kg	0.0023	ND
Chloroethane	1	mg/kg	0.0023	ND
Chloroform	1	mg/kg	0.0023	ND
Chloromethane	1	mg/kg	0.0023	ND
cis-1,2-Dichloroethene	1	mg/kg	0.0023	ND
cis-1,3-Dichloropropene	1	mg/kg	0.0023	ND
Cyclohexane	1	mg/kg	0.0023	ND
Dibromochloromethane	1	mg/kg	0.0023	ND
Dichlorodifluoromethane	1	mg/kg	0.0023	ND
Ethylbenzene	1	mg/kg	0.0011	ND
Isopropylbenzene	1	mg/kg	0.0011	ND
m&p-Xylenes	1	mg/kg	0.0011	ND
Methyl Acetate	1	mg/kg	0.0023	ND
Methylcyclohexane	1	mg/kg	0.0023	ND
Methylene chloride	1	mg/kg	0.0023	ND

NOTE: Soil Results are reported to Dry Weight

Sample ID: SB19
Lab#: AC88606-016
Matrix: Soil

Collection Date: 12/3/2015
Receipt Date: 12/6/2015

Methyl-t-butyl ether	1	mg/kg	0.0011	ND
o-Xylene	1	mg/kg	0.0011	ND
Styrene	1	mg/kg	0.0023	ND
Tetrachloroethene	**1**	**mg/kg**	**0.0023**	**0.0024**
Toluene	1	mg/kg	0.0011	ND
trans-1,2-Dichloroethene	1	mg/kg	0.0023	ND
trans-1,3-Dichloropropene	1	mg/kg	0.0023	ND
Trichloroethene	1	mg/kg	0.0023	ND
Trichlorofluoromethane	1	mg/kg	0.0023	ND
Vinyl chloride	1	mg/kg	0.0023	ND
Xylenes (Total)	1	mg/kg	0.0011	ND

Surrogate	Conc.	Spike	Low Limit	High Limit	Recovery	Flags
Toluene-d8	26.89	30	70	130	90	
Dibromofluoromethane	35.76	30	70	130	119	
Bromofluorobenzene	28.83	30	70	130	96	
1,2-Dichloroethane-d4	30.38	30	70	130	101	

Sample ID: SB20
Lab#: AC88606-017
Matrix: Soil

Collection Date: 12/4/2015
Receipt Date: 12/6/2015

% Solids SM2540G

Analyte	DF	Units	RL	Result
% Solids	1	percent		82

Ignitability (EPA 1030)

Analyte	DF	Units	RL	Result
Burning Rate (mm/sec)	1			NA
Flame Propagation (POS/NEG)	1			NA
Ignitability Screen (POS/NEG)	1			NEG

Mercury (TCLP) 7470A

Analyte	DF	Units	RL	Result
Mercury	1	mg/l	0.00070	ND

PAH Compounds 8270

Analyte	DF	Units	RL	Result
2-Methylnaphthalene	1	mg/kg	0.041	ND
Acenaphthene	1	mg/kg	0.041	ND
Acenaphthylene	1	mg/kg	0.041	ND
Anthracene	1	mg/kg	0.041	ND
Benzo[a]anthracene	1	mg/kg	0.041	ND
Benzo[a]pyrene	1	mg/kg	0.041	ND
Benzo[b]fluoranthene	1	mg/kg	0.041	ND
Benzo[g,h,i]perylene	1	mg/kg	0.041	ND
Benzo[k]fluoranthene	1	mg/kg	0.041	ND
Chrysene	1	mg/kg	0.041	ND
Dibenzo[a,h]anthracene	1	mg/kg	0.041	ND
Fluoranthene	1	mg/kg	0.041	ND
Fluorene	1	mg/kg	0.041	ND
Indeno[1,2,3-cd]pyrene	1	mg/kg	0.041	ND
Naphthalene	1	mg/kg	0.010	ND
Phenanthrene	1	mg/kg	0.041	ND
Pyrene	1	mg/kg	0.041	ND

Surrogate	Conc.	Spike	Low Limit	High Limit	Recovery	Flags
Terphenyl-d14	53.64	50	30	130	107	
Phenol-d5	72.26	100	30	130	72	
Nitrobenzene-d5	41.36	50	30	130	83	
2-Fluorophenol	74.05	100	30	130	74	
2-Fluorobiphenyl	43.94	50	30	130	88	
2,4,6-Tribromophenol	96.78	100	30	130	97	

Paint Filter Test 9095A

Analyte	DF	Units	RL	Result
Paint Filter Test	1			NEG

PCB 8082

Analyte	DF	Units	RL	Result
Aroclor (Total)	1	mg/kg	0.030	ND
Aroclor-1016	1	mg/kg	0.030	ND
Aroclor-1221	1	mg/kg	0.030	ND
Aroclor-1232	1	mg/kg	0.030	ND
Aroclor-1242	1	mg/kg	0.030	ND
Aroclor-1248	1	mg/kg	0.030	ND
Aroclor-1254	1	mg/kg	0.030	ND
Aroclor-1260	1	mg/kg	0.030	ND
Aroclor-1262	1	mg/kg	0.030	ND
Aroclor-1268	1	mg/kg	0.030	ND

Surrogate	Conc.	Spike	Low Limit	High Limit	Recovery	Flags
TCMX-Surrogate	84.34	100	30	150	84	
TCMX-Surrogate	80.21	100	30	150	80	
DCB-Surrogate	78.15	100	30	150	78	
DCB-Surrogate	68.59	100	30	150	69	

pH 9040C/9045D

Analyte	DF	Units	RL	Result
pH	1	ph		8

NOTE: Soil Results are reported to Dry Weight

HAZ-150

Sample ID: SB20
Lab#: AC88606-017
Matrix: Soil

Collection Date: 12/4/2015
Receipt Date: 12/6/2015

Reactive Cyanide

Analyte	DF	Units	RL	Result
Cyanide (Reactive)	1	mg/kg	0.50	ND

Reactive Sulfide

Analyte	DF	Units	RL	Result
Sulfide (Reactive)	1	mg/kg	100	ND

TCLP Metals 6010

Analyte	DF	Units	RL	Result
Arsenic	1	mg/l	0.10	ND
Barium	**1**	**mg/l**	**0.25**	**0.31**
Cadmium	1	mg/l	0.050	ND
Chromium	1	mg/l	0.10	ND
Lead	1	mg/l	0.050	ND
Nickel	1	mg/l	0.10	ND
Selenium	1	mg/l	0.10	ND
Silver	1	mg/l	0.050	ND

Total PetroleumHydrocarbons8015B(C8-C40)

Analyte	DF	Units	RL	Result
Total Petroleum Hydrocarbons	1	mg/kg	73	ND

Volatile Organics (no search) 8260

Analyte	DF	Units	RL	Result
1,1,1-Trichloroethane	1.02	mg/kg	0.0025	ND
1,1,2,2-Tetrachloroethane	1.02	mg/kg	0.0025	ND
1,1,2-Trichloro-1,2,2-trifluoroethane	1.02	mg/kg	0.0025	ND
1,1,2-Trichloroethane	1.02	mg/kg	0.0025	ND
1,1-Dichloroethane	1.02	mg/kg	0.0025	ND
1,1-Dichloroethene	1.02	mg/kg	0.0025	ND
1,2,3-Trichlorobenzene	1.02	mg/kg	0.0025	ND
1,2,4-Trichlorobenzene	1.02	mg/kg	0.0025	ND
1,2-Dibromo-3-chloropropane	1.02	mg/kg	0.0025	ND
1,2-Dibromoethane	1.02	mg/kg	0.0025	ND
1,2-Dichlorobenzene	1.02	mg/kg	0.0025	ND
1,2-Dichloroethane	1.02	mg/kg	0.0012	ND
1,2-Dichloropropane	1.02	mg/kg	0.0025	ND
1,3-Dichlorobenzene	1.02	mg/kg	0.0025	ND
1,4-Dichlorobenzene	1.02	mg/kg	0.0025	ND
1,4-Dioxane	1.02	mg/kg	0.12	ND
2-Butanone	1.02	mg/kg	0.0025	ND
2-Hexanone	1.02	mg/kg	0.0025	ND
4-Methyl-2-pentanone	1.02	mg/kg	0.0025	ND
Acetone	1.02	mg/kg	0.012	ND
Benzene	1.02	mg/kg	0.0012	ND
Bromochloromethane	1.02	mg/kg	0.0025	ND
Bromodichloromethane	1.02	mg/kg	0.0025	ND
Bromoform	1.02	mg/kg	0.0025	ND
Bromomethane	1.02	mg/kg	0.0025	ND
Carbon disulfide	1.02	mg/kg	0.0025	ND
Carbon tetrachloride	1.02	mg/kg	0.0025	ND
Chlorobenzene	1.02	mg/kg	0.0025	ND
Chloroethane	1.02	mg/kg	0.0025	ND
Chloroform	1.02	mg/kg	0.0025	ND
Chloromethane	1.02	mg/kg	0.0025	ND
cis-1,2-Dichloroethene	1.02	mg/kg	0.0025	ND
cis-1,3-Dichloropropene	1.02	mg/kg	0.0025	ND
Cyclohexane	1.02	mg/kg	0.0025	ND
Dibromochloromethane	1.02	mg/kg	0.0025	ND
Dichlorodifluoromethane	1.02	mg/kg	0.0025	ND
Ethylbenzene	1.02	mg/kg	0.0012	ND
Isopropylbenzene	1.02	mg/kg	0.0012	ND
m&p-Xylenes	1.02	mg/kg	0.0012	ND
Methyl Acetate	1.02	mg/kg	0.0025	ND
Methylcyclohexane	1.02	mg/kg	0.0025	ND
Methylene chloride	**1.02**	**mg/kg**	**0.0025**	**0.0028**

Sample ID: SB20 **Collection Date: 12/4/2015**
Lab#: AC88606-017 **Receipt Date: 12/6/2015**
Matrix: Soil

Methyl-t-butyl ether	1.02	mg/kg	0.0012	ND
o-Xylene	1.02	mg/kg	0.0012	ND
Styrene	1.02	mg/kg	0.0025	ND
Tetrachloroethene	**1.02**	**mg/kg**	**0.0025**	**0.0035**
Toluene	1.02	mg/kg	0.0012	ND
trans-1,2-Dichloroethene	1.02	mg/kg	0.0025	ND
trans-1,3-Dichloropropene	1.02	mg/kg	0.0025	ND
Trichloroethene	1.02	mg/kg	0.0025	ND
Trichlorofluoromethane	1.02	mg/kg	0.0025	ND
Vinyl chloride	1.02	mg/kg	0.0025	ND
Xylenes (Total)	1.02	mg/kg	0.0012	ND

Surrogate	Conc.	Spike	Low Limit	High Limit	Recovery	Flags
Toluene-d8	28.72	30	70	130	96	
Dibromofluoromethane	36.09	30	70	130	120	
Bromofluorobenzene	29.41	30	70	130	98	
1,2-Dichloroethane-d4	29.75	30	70	130	99	

Sample ID: SB21 | **Collection Date: 12/4/2015**
Lab#: AC88606-018 | **Receipt Date: 12/6/2015**
Matrix: Soil

% Solids SM2540G

Analyte	DF	Units	RL	Result
% Solids	1	percent		91

Ignitability (EPA 1030)

Analyte	DF	Units	RL	Result
Burning Rate (mm/sec)	1			NA
Flame Propagation (POS/NEG)	1			NA
Ignitability Screen (POS/NEG)	1			NEG

Mercury (TCLP) 7470A

Analyte	DF	Units	RL	Result
Mercury	1	mg/l	0.00070	ND

PAH Compounds 8270

Analyte	DF	Units	RL	Result
2-Methylnaphthalene	1	mg/kg	0.037	ND
Acenaphthene	1	mg/kg	0.037	ND
Acenaphthylene	1	mg/kg	0.037	ND
Anthracene	1	mg/kg	0.037	ND
Benzo[a]anthracene	1	mg/kg	0.037	ND
Benzo[a]pyrene	1	mg/kg	0.037	ND
Benzo[b]fluoranthene	1	mg/kg	0.037	ND
Benzo[g,h,i]perylene	1	mg/kg	0.037	ND
Benzo[k]fluoranthene	1	mg/kg	0.037	ND
Chrysene	1	mg/kg	0.037	ND
Dibenzo[a,h]anthracene	1	mg/kg	0.037	ND
Fluoranthene	1	mg/kg	0.037	ND
Fluorene	1	mg/kg	0.037	ND
Indeno[1,2,3-cd]pyrene	1	mg/kg	0.037	ND
Naphthalene	1	mg/kg	0.0092	ND
Phenanthrene	1	mg/kg	0.037	ND
Pyrene	1	mg/kg	0.037	ND

Surrogate	Conc.	Spike	Low Limit	High Limit	Recovery	Flags
Terphenyl-d14	55.93	50	30	130	112	
Phenol-d5	75.03	100	30	130	75	
Nitrobenzene-d5	43.38	50	30	130	87	
2-Fluorophenol	75.23	100	30	130	75	
2-Fluorobiphenyl	47.28	50	30	130	95	
2,4,6-Tribromophenol	86.86	100	30	130	87	

Paint Filter Test 9095A

Analyte	DF	Units	RL	Result
Paint Filter Test	1			NEG

PCB 8082

Analyte	DF	Units	RL	Result
Aroclor (Total)	1	mg/kg	0.027	ND
Aroclor-1016	1	mg/kg	0.027	ND
Aroclor-1221	1	mg/kg	0.027	ND
Aroclor-1232	1	mg/kg	0.027	ND
Aroclor-1242	1	mg/kg	0.027	ND
Aroclor-1248	1	mg/kg	0.027	ND
Aroclor-1254	1	mg/kg	0.027	ND
Aroclor-1260	1	mg/kg	0.027	ND
Aroclor-1262	1	mg/kg	0.027	ND
Aroclor-1268	1	mg/kg	0.027	ND

Surrogate	Conc.	Spike	Low Limit	High Limit	Recovery	Flags
TCMX-Surrogate	79.29	100	30	150	79	
TCMX-Surrogate	75.70	100	30	150	76	
DCB-Surrogate	73.34	100	30	150	73	
DCB-Surrogate	64.93	100	30	150	65	

pH 9040C/9045D

Analyte	DF	Units	RL	Result
pH	1	ph		9.9

HA2 - 1C2

Sample ID: SB21 | **Collection Date: 12/4/2015**
Lab#: AC88606-018 | **Receipt Date: 12/6/2015**
Matrix: Soil

Reactive Cyanide

Analyte	DF	Units	RL	Result
Cyanide (Reactive)	1	mg/kg	0.50	ND

Reactive Sulfide

Analyte	DF	Units	RL	Result
Sulfide (Reactive)	1	mg/kg	100	ND

TCLP Metals 6010

Analyte	DF	Units	RL	Result
Arsenic	1	mg/l	0.10	ND
Barium	**1**	**mg/l**	**0.25**	**0.31**
Cadmium	1	mg/l	0.050	ND
Chromium	1	mg/l	0.10	ND
Lead	1	mg/l	0.050	ND
Nickel	1	mg/l	0.10	ND
Selenium	1	mg/l	0.10	ND
Silver	1	mg/l	0.050	ND

Total PetroleumHydrocarbons8015B(C8-C40)

Analyte	DF	Units	RL	Result
Total Petroleum Hydrocarbons	1	mg/kg	66	ND

Volatile Organics (no search) 8260

Analyte	DF	Units	RL	Result
1,1,1-Trichloroethane	0.945	mg/kg	0.0021	ND
1,1,2,2-Tetrachloroethane	0.945	mg/kg	0.0021	ND
1,1,2-Trichloro-1,2,2-trifluoroethane	0.945	mg/kg	0.0021	ND
1,1,2-Trichloroethane	0.945	mg/kg	0.0021	ND
1,1-Dichloroethane	0.945	mg/kg	0.0021	ND
1,1-Dichloroethene	0.945	mg/kg	0.0021	ND
1,2,3-Trichlorobenzene	0.945	mg/kg	0.0021	ND
1,2,4-Trichlorobenzene	0.945	mg/kg	0.0021	ND
1,2-Dibromo-3-chloropropane	0.945	mg/kg	0.0021	ND
1,2-Dibromoethane	0.945	mg/kg	0.0021	ND
1,2-Dichlorobenzene	0.945	mg/kg	0.0021	ND
1,2-Dichloroethane	0.945	mg/kg	0.0010	ND
1,2-Dichloropropane	0.945	mg/kg	0.0021	ND
1,3-Dichlorobenzene	0.945	mg/kg	0.0021	ND
1,4-Dichlorobenzene	0.945	mg/kg	0.0021	ND
1,4-Dioxane	0.945	mg/kg	0.10	ND
2-Butanone	0.945	mg/kg	0.0021	ND
2-Hexanone	0.945	mg/kg	0.0021	ND
4-Methyl-2-pentanone	0.945	mg/kg	0.0021	ND
Acetone	0.945	mg/kg	0.010	ND
Benzene	0.945	mg/kg	0.0010	ND
Bromochloromethane	0.945	mg/kg	0.0021	ND
Bromodichloromethane	0.945	mg/kg	0.0021	ND
Bromoform	0.945	mg/kg	0.0021	ND
Bromomethane	0.945	mg/kg	0.0021	ND
Carbon disulfide	0.945	mg/kg	0.0021	ND
Carbon tetrachloride	0.945	mg/kg	0.0021	ND
Chlorobenzene	0.945	mg/kg	0.0021	ND
Chloroethane	0.945	mg/kg	0.0021	ND
Chloroform	0.945	mg/kg	0.0021	ND
Chloromethane	0.945	mg/kg	0.0021	ND
cis-1,2-Dichloroethene	0.945	mg/kg	0.0021	ND
cis-1,3-Dichloropropene	0.945	mg/kg	0.0021	ND
Cyclohexane	0.945	mg/kg	0.0021	ND
Dibromochloromethane	0.945	mg/kg	0.0021	ND
Dichlorodifluoromethane	0.945	mg/kg	0.0021	ND
Ethylbenzene	0.945	mg/kg	0.0010	ND
Isopropylbenzene	0.945	mg/kg	0.0010	ND
m&p-Xylenes	0.945	mg/kg	0.0010	ND
Methyl Acetate	0.945	mg/kg	0.0021	ND
Methylcyclohexane	0.945	mg/kg	0.0021	ND
Methylene chloride	0.945	mg/kg	0.0021	ND

HAZ-154

Sample ID: SB21 **Collection Date: 12/4/2015**
Lab#: AC88606-018 **Receipt Date: 12/6/2015**
Matrix: Soil

Methyl-t-butyl ether	0.945	mg/kg	0.0010	ND
o-Xylene	0.945	mg/kg	0.0010	ND
Styrene	0.945	mg/kg	0.0021	ND
Tetrachloroethene	0.945	mg/kg	0.0021	ND
Toluene	0.945	mg/kg	0.0010	ND
trans-1,2-Dichloroethene	0.945	mg/kg	0.0021	ND
trans-1,3-Dichloropropene	0.945	mg/kg	0.0021	ND
Trichloroethene	0.945	mg/kg	0.0021	ND
Trichlorofluoromethane	0.945	mg/kg	0.0021	ND
Vinyl chloride	0.945	mg/kg	0.0021	ND
Xylenes (Total)	0.945	mg/kg	0.0010	ND

Surrogate	Conc.	Spike	Low Limit	High Limit	Recovery	Flags
Toluene-d8	28.28	30	70	130	94	
Dibromofluoromethane	35.16	30	70	130	117	
Bromofluorobenzene	30.93	30	70	130	103	
1,2-Dichloroethane-d4	30.96	30	70	130	103	

Sample ID: SB22
Lab#: AC88606-019
Matrix: Soil

Collection Date: 12/4/2015
Receipt Date: 12/6/2015

% Solids SM2540G

Analyte	DF	Units	RL	Result
% Solids	1	percent		93

Ignitability (EPA 1030)

Analyte	DF	Units	RL	Result
Burning Rate (mm/sec)	1			NA
Flame Propagation (POS/NEG)	1			NA
Ignitability Screen (POS/NEG)	1			NEG

Mercury (TCLP) 7470A

Analyte	DF	Units	RL	Result
Mercury	1	mg/l	0.00070	ND

PAH Compounds 8270

Analyte	DF	Units	RL	Result
2-Methylnaphthalene	1	mg/kg	0.036	ND
Acenaphthene	1	mg/kg	0.036	ND
Acenaphthylene	1	mg/kg	0.036	ND
Anthracene	1	mg/kg	0.036	ND
Benzo[a]anthracene	1	mg/kg	0.036	ND
Benzo[a]pyrene	1	mg/kg	0.036	ND
Benzo[b]fluoranthene	1	mg/kg	0.036	ND
Benzo[g,h,i]perylene	1	mg/kg	0.036	ND
Benzo[k]fluoranthene	1	mg/kg	0.036	ND
Chrysene	1	mg/kg	0.036	ND
Dibenzo[a,h]anthracene	1	mg/kg	0.036	ND
Fluoranthene	1	mg/kg	0.036	ND
Fluorene	1	mg/kg	0.036	ND
Indeno[1,2,3-cd]pyrene	1	mg/kg	0.036	ND
Naphthalene	1	mg/kg	0.0090	ND
Phenanthrene	1	mg/kg	0.036	ND
Pyrene	1	mg/kg	0.036	ND

Surrogate	Conc.	Spike	Low Limit	High Limit	Recovery	Flags
Terphenyl-d14	57.54	50	30	130	115	
Phenol-d5	78.95	100	30	130	79	
Nitrobenzene-d5	45.66	50	30	130	91	
2-Fluorophenol	81.02	100	30	130	81	
2-Fluorobiphenyl	50.78	50	30	130	102	
2,4,6-Tribromophenol	105.05	100	30	130	105	

Paint Filter Test 9095A

Analyte	DF	Units	RL	Result
Paint Filter Test	1			NEG

PCB 8082

Analyte	DF	Units	RL	Result
Aroclor (Total)	1	mg/kg	0.027	ND
Aroclor-1016	1	mg/kg	0.027	ND
Aroclor-1221	1	mg/kg	0.027	ND
Aroclor-1232	1	mg/kg	0.027	ND
Aroclor-1242	1	mg/kg	0.027	ND
Aroclor-1248	1	mg/kg	0.027	ND
Aroclor-1254	1	mg/kg	0.027	ND
Aroclor-1260	1	mg/kg	0.027	ND
Aroclor-1262	1	mg/kg	0.027	ND
Aroclor-1268	1	mg/kg	0.027	ND

Surrogate	Conc.	Spike	Low Limit	High Limit	Recovery	Flags
TCMX-Surrogate	73.29	100	30	150	73	
TCMX-Surrogate	69.78	100	30	150	70	
DCB-Surrogate	68.86	100	30	150	69	
DCB-Surrogate	61.69	100	30	150	62	

pH 9040C/9045D

Analyte	DF	Units	RL	Result
pH	1	ph		8.1

NOTE: Soil Results are reported to Dry Weight

Sample ID: SB22
Lab#: AC88606-019
Matrix: Soil

Collection Date: 12/4/2015
Receipt Date: 12/6/2015

Reactive Cyanide

Analyte	DF	Units	RL	Result
Cyanide (Reactive)	1	mg/kg	0.50	ND

Reactive Sulfide

Analyte	DF	Units	RL	Result
Sulfide (Reactive)	1	mg/kg	100	ND

TCLP Metals 6010

Analyte	DF	Units	RL	Result
Arsenic	1	mg/l	0.10	ND
Barium	**1**	**mg/l**	**0.25**	**0.30**
Cadmium	1	mg/l	0.050	ND
Chromium	1	mg/l	0.10	ND
Lead	1	mg/l	0.050	ND
Nickel	1	mg/l	0.10	ND
Selenium	1	mg/l	0.10	ND
Silver	1	mg/l	0.050	ND

Total PetroleumHydrocarbons8015B(C8-C40)

Analyte	DF	Units	RL	Result
Total Petroleum Hydrocarbons	1	mg/kg	65	ND

Volatile Organics (no search) 8260

Analyte	DF	Units	RL	Result
1,1,1-Trichloroethane	0.926	mg/kg	0.0020	ND
1,1,2,2-Tetrachloroethane	0.926	mg/kg	0.0020	ND
1,1,2-Trichloro-1,2,2-trifluoroethane	0.926	mg/kg	0.0020	ND
1,1,2-Trichloroethane	0.926	mg/kg	0.0020	ND
1,1-Dichloroethane	0.926	mg/kg	0.0020	ND
1,1-Dichloroethene	0.926	mg/kg	0.0020	ND
1,2,3-Trichlorobenzene	0.926	mg/kg	0.0020	ND
1,2,4-Trichlorobenzene	0.926	mg/kg	0.0020	ND
1,2-Dibromo-3-chloropropane	0.926	mg/kg	0.0020	ND
1,2-Dibromoethane	0.926	mg/kg	0.0020	ND
1,2-Dichlorobenzene	0.926	mg/kg	0.0020	ND
1,2-Dichloroethane	0.926	mg/kg	0.0010	ND
1,2-Dichloropropane	0.926	mg/kg	0.0020	ND
1,3-Dichlorobenzene	0.926	mg/kg	0.0020	ND
1,4-Dichlorobenzene	0.926	mg/kg	0.0020	ND
1,4-Dioxane	0.926	mg/kg	0.10	ND
2-Butanone	0.926	mg/kg	0.0020	ND
2-Hexanone	0.926	mg/kg	0.0020	ND
4-Methyl-2-pentanone	0.926	mg/kg	0.0020	ND
Acetone	0.926	mg/kg	0.010	ND
Benzene	0.926	mg/kg	0.0010	ND
Bromochloromethane	0.926	mg/kg	0.0020	ND
Bromodichloromethane	0.926	mg/kg	0.0020	ND
Bromoform	0.926	mg/kg	0.0020	ND
Bromomethane	0.926	mg/kg	0.0020	ND
Carbon disulfide	0.926	mg/kg	0.0020	ND
Carbon tetrachloride	0.926	mg/kg	0.0020	ND
Chlorobenzene	0.926	mg/kg	0.0020	ND
Chloroethane	0.926	mg/kg	0.0020	ND
Chloroform	0.926	mg/kg	0.0020	ND
Chloromethane	0.926	mg/kg	0.0020	ND
cis-1,2-Dichloroethene	0.926	mg/kg	0.0020	ND
cis-1,3-Dichloropropene	0.926	mg/kg	0.0020	ND
Cyclohexane	0.926	mg/kg	0.0020	ND
Dibromochloromethane	0.926	mg/kg	0.0020	ND
Dichlorodifluoromethane	0.926	mg/kg	0.0020	ND
Ethylbenzene	0.926	mg/kg	0.0010	ND
Isopropylbenzene	0.926	mg/kg	0.0010	ND
m&p-Xylenes	0.926	mg/kg	0.0010	ND
Methyl Acetate	0.926	mg/kg	0.0020	ND
Methylcyclohexane	0.926	mg/kg	0.0020	ND
Methylene chloride	0.926	mg/kg	0.0020	ND

Sample ID: SB22
Lab#: AC88606-019
Matrix: Soil

Collection Date: 12/4/2015
Receipt Date: 12/6/2015

Methyl-t-butyl ether	0.926	mg/kg	0.0010	ND
o-Xylene	0.926	mg/kg	0.0010	ND
Styrene	0.926	mg/kg	0.0020	ND
Tetrachloroethene	0.926	mg/kg	0.0020	ND
Toluene	0.926	mg/kg	0.0010	ND
trans-1,2-Dichloroethene	0.926	mg/kg	0.0020	ND
trans-1,3-Dichloropropene	0.926	mg/kg	0.0020	ND
Trichloroethene	0.926	mg/kg	0.0020	ND
Trichlorofluoromethane	0.926	mg/kg	0.0020	ND
Vinyl chloride	0.926	mg/kg	0.0020	ND
Xylenes (Total)	0.926	mg/kg	0.0010	ND

Surrogate	Conc.	Spike	Low Limit	High Limit	Recovery	Flags
Toluene-d8	29.81	30	70	130	99	
Dibromofluoromethane	33.94	30	70	130	113	
Bromofluorobenzene	28.14	30	70	130	94	
1,2-Dichloroethane-d4	30.15	30	70	130	101	

Sample ID: SB23 | **Collection Date: 12/4/2015**
Lab#: AC88606-020 | **Receipt Date: 12/6/2015**
Matrix: Soil

% Solids SM2540G

Analyte	DF	Units	RL	Result
% Solids	1	percent		86

Ignitability (EPA 1030)

Analyte	DF	Units	RL	Result
Burning Rate (mm/sec)	1			NA
Flame Propagation (POS/NEG)	1			NA
Ignitability Screen (POS/NEG)	1			NEG

Mercury (TCLP) 7470A

Analyte	DF	Units	RL	Result
Mercury	1	mg/l	0.00070	ND

PAH Compounds 8270

Analyte	DF	Units	RL	Result
2-Methylnaphthalene	1	mg/kg	0.039	ND
Acenaphthene	1	mg/kg	0.039	ND
Acenaphthylene	1	mg/kg	0.039	ND
Anthracene	1	mg/kg	0.039	ND
Benzo[a]anthracene	1	mg/kg	0.039	ND
Benzo[a]pyrene	1	mg/kg	0.039	ND
Benzo[b]fluoranthene	1	mg/kg	0.039	ND
Benzo[g,h,i]perylene	1	mg/kg	0.039	ND
Benzo[k]fluoranthene	1	mg/kg	0.039	ND
Chrysene	1	mg/kg	0.039	ND
Dibenzo[a,h]anthracene	1	mg/kg	0.039	ND
Fluoranthene	1	mg/kg	0.039	ND
Fluorene	1	mg/kg	0.039	ND
Indeno[1,2,3-cd]pyrene	1	mg/kg	0.039	ND
Naphthalene	1	mg/kg	0.0097	ND
Phenanthrene	1	mg/kg	0.039	ND
Pyrene	1	mg/kg	0.039	ND

Surrogate	Conc.	Spike	Low Limit	High Limit	Recovery	Flags
Terphenyl-d14	56.29	50	30	130	113	
Phenol-d5	72.42	100	30	130	72	
Nitrobenzene-d5	42.39	50	30	130	85	
2-Fluorophenol	73.51	100	30	130	74	
2-Fluorobiphenyl	45.29	50	30	130	91	
2,4,6-Tribromophenol	95.02	100	30	130	95	

Paint Filter Test 9095A

Analyte	DF	Units	RL	Result
Paint Filter Test	1			NEG

PCB 8082

Analyte	DF	Units	RL	Result
Aroclor (Total)	1	mg/kg	0.029	ND
Aroclor-1016	1	mg/kg	0.029	ND
Aroclor-1221	1	mg/kg	0.029	ND
Aroclor-1232	1	mg/kg	0.029	ND
Aroclor-1242	1	mg/kg	0.029	ND
Aroclor-1248	1	mg/kg	0.029	ND
Aroclor-1254	1	mg/kg	0.029	ND
Aroclor-1260	1	mg/kg	0.029	ND
Aroclor-1262	1	mg/kg	0.029	ND
Aroclor-1268	1	mg/kg	0.029	ND

Surrogate	Conc.	Spike	Low Limit	High Limit	Recovery	Flags
TCMX-Surrogate	78.79	100	30	150	79	
TCMX-Surrogate	69.87	100	30	150	70	
DCB-Surrogate	66.79	100	30	150	67	
DCB-Surrogate	56.44	100	30	150	56	

pH 9040C/9045D

Analyte	DF	Units	RL	Result
pH	1	ph		8.1

Sample ID: SB23	**Collection Date: 12/4/2015**
Lab#: AC88606-020	**Receipt Date: 12/6/2015**
Matrix: Soil	

Reactive Cyanide

Analyte	DF	Units	RL	Result
Cyanide (Reactive)	1	mg/kg	0.50	ND

Reactive Sulfide

Analyte	DF	Units	RL	Result
Sulfide (Reactive)	1	mg/kg	100	ND

TCLP Metals 6010

Analyte	DF	Units	RL	Result
Arsenic	1	mg/l	0.10	ND
Barium	**1**	**mg/l**	**0.25**	**0.30**
Cadmium	1	mg/l	0.050	ND
Chromium	1	mg/l	0.10	ND
Lead	1	mg/l	0.050	ND
Nickel	1	mg/l	0.10	ND
Selenium	1	mg/l	0.10	ND
Silver	1	mg/l	0.050	ND

Total PetroleumHydrocarbons8015B(C8-C40)

Analyte	DF	Units	RL	Result
Total Petroleum Hydrocarbons	1	mg/kg	70	ND

Volatile Organics (no search) 8260

Analyte	DF	Units	RL	Result
1,1,1-Trichloroethane	0.984	mg/kg	0.0023	ND
1,1,2,2-Tetrachloroethane	0.984	mg/kg	0.0023	ND
1,1,2-Trichloro-1,2,2-trifluoroethane	0.984	mg/kg	0.0023	ND
1,1,2-Trichloroethane	0.984	mg/kg	0.0023	ND
1,1-Dichloroethane	0.984	mg/kg	0.0023	ND
1,1-Dichloroethene	0.984	mg/kg	0.0023	ND
1,2,3-Trichlorobenzene	0.984	mg/kg	0.0023	ND
1,2,4-Trichlorobenzene	0.984	mg/kg	0.0023	ND
1,2-Dibromo-3-chloropropane	0.984	mg/kg	0.0023	ND
1,2-Dibromoethane	0.984	mg/kg	0.0023	ND
1,2-Dichlorobenzene	0.984	mg/kg	0.0023	ND
1,2-Dichloroethane	0.984	mg/kg	0.0011	ND
1,2-Dichloropropane	0.984	mg/kg	0.0023	ND
1,3-Dichlorobenzene	0.984	mg/kg	0.0023	ND
1,4-Dichlorobenzene	0.984	mg/kg	0.0023	ND
1,4-Dioxane	0.984	mg/kg	0.11	ND
2-Butanone	0.984	mg/kg	0.0023	ND
2-Hexanone	0.984	mg/kg	0.0023	ND
4-Methyl-2-pentanone	0.984	mg/kg	0.0023	ND
Acetone	0.984	mg/kg	0.011	ND
Benzene	0.984	mg/kg	0.0011	ND
Bromochloromethane	0.984	mg/kg	0.0023	ND
Bromodichloromethane	0.984	mg/kg	0.0023	ND
Bromoform	0.984	mg/kg	0.0023	ND
Bromomethane	0.984	mg/kg	0.0023	ND
Carbon disulfide	0.984	mg/kg	0.0023	ND
Carbon tetrachloride	0.984	mg/kg	0.0023	ND
Chlorobenzene	0.984	mg/kg	0.0023	ND
Chloroethane	0.984	mg/kg	0.0023	ND
Chloroform	0.984	mg/kg	0.0023	ND
Chloromethane	0.984	mg/kg	0.0023	ND
cis-1,2-Dichloroethene	0.984	mg/kg	0.0023	ND
cis-1,3-Dichloropropene	0.984	mg/kg	0.0023	ND
Cyclohexane	0.984	mg/kg	0.0023	ND
Dibromochloromethane	0.984	mg/kg	0.0023	ND
Dichlorodifluoromethane	0.984	mg/kg	0.0023	ND
Ethylbenzene	0.984	mg/kg	0.0011	ND
Isopropylbenzene	0.984	mg/kg	0.0011	ND
m&p-Xylenes	0.984	mg/kg	0.0011	ND
Methyl Acetate	0.984	mg/kg	0.0023	ND
Methylcyclohexane	0.984	mg/kg	0.0023	ND
Methylene chloride	**0.984**	**mg/kg**	**0.0023**	**0.0032**

HAZ-160

Sample ID: SB23 **Collection Date: 12/4/2015**
Lab#: AC88606-020 **Receipt Date: 12/6/2015**
Matrix: Soil

Methyl-t-butyl ether	0.984	mg/kg	0.0011	ND
o-Xylene	0.984	mg/kg	0.0011	ND
Styrene	0.984	mg/kg	0.0023	ND
Tetrachloroethene	0.984	mg/kg	0.0023	ND
Toluene	0.984	mg/kg	0.0011	ND
trans-1,2-Dichloroethene	0.984	mg/kg	0.0023	ND
trans-1,3-Dichloropropene	0.984	mg/kg	0.0023	ND
Trichloroethene	0.984	mg/kg	0.0023	ND
Trichlorofluoromethane	0.984	mg/kg	0.0023	ND
Vinyl chloride	0.984	mg/kg	0.0023	ND
Xylenes (Total)	0.984	mg/kg	0.0011	ND

Surrogate	Conc.	Spike	Low Limit	High Limit	Recovery	Flags
Toluene-d8	29.52	30	70	130	98	
Dibromofluoromethane	34.43	30	70	130	115	
Bromofluorobenzene	30.13	30	70	130	100	
1,2-Dichloroethane-d4	29.63	30	70	130	99	

Sample ID: SB24 | **Collection Date: 12/4/2015**
Lab#: AC88606-021 | **Receipt Date: 12/6/2015**
Matrix: Soil

% Solids SM2540G

Analyte	DF	Units	RL	Result
% Solids	1	percent		87

Ignitability (EPA 1030)

Analyte	DF	Units	RL	Result
Burning Rate (mm/sec)	1			NA
Flame Propagation (POS/NEG)	1			NA
Ignitability Screen (POS/NEG)	1			NEG

Mercury (TCLP) 7470A

Analyte	DF	Units	RL	Result
Mercury	1	mg/l	0.00070	ND

PAH Compounds 8270

Analyte	DF	Units	RL	Result
2-Methylnaphthalene	1	mg/kg	0.038	ND
Acenaphthene	1	mg/kg	0.038	ND
Acenaphthylene	1	mg/kg	0.038	ND
Anthracene	1	mg/kg	0.038	ND
Benzo[a]anthracene	1	mg/kg	0.038	ND
Benzo[a]pyrene	1	mg/kg	0.038	ND
Benzo[b]fluoranthene	1	mg/kg	0.038	ND
Benzo[g,h,i]perylene	1	mg/kg	0.038	ND
Benzo[k]fluoranthene	1	mg/kg	0.038	ND
Chrysene	1	mg/kg	0.038	ND
Dibenzo[a,h]anthracene	1	mg/kg	0.038	ND
Fluoranthene	1	mg/kg	0.038	ND
Fluorene	1	mg/kg	0.038	ND
Indeno[1,2,3-cd]pyrene	1	mg/kg	0.038	ND
Naphthalene	1	mg/kg	0.0096	ND
Phenanthrene	1	mg/kg	0.038	ND
Pyrene	1	mg/kg	0.038	ND

Surrogate	Conc.	Spike	Low Limit	High Limit	Recovery	Flags
Terphenyl-d14	56.51	50	30	130	113	
Phenol-d5	76.00	100	30	130	76	
Nitrobenzene-d5	41.22	50	30	130	82	
2-Fluorophenol	72.56	100	30	130	73	
2-Fluorobiphenyl	47.21	50	30	130	94	
2,4,6-Tribromophenol	89.67	100	30	130	90	

Paint Filter Test 9095A

Analyte	DF	Units	RL	Result
Paint Filter Test	1			NEG

PCB 8082

Analyte	DF	Units	RL	Result
Aroclor (Total)	1	mg/kg	0.029	ND
Aroclor-1016	1	mg/kg	0.029	ND
Aroclor-1221	1	mg/kg	0.029	ND
Aroclor-1232	1	mg/kg	0.029	ND
Aroclor-1242	1	mg/kg	0.029	ND
Aroclor-1248	1	mg/kg	0.029	ND
Aroclor-1254	1	mg/kg	0.029	ND
Aroclor-1260	1	mg/kg	0.029	ND
Aroclor-1262	1	mg/kg	0.029	ND
Aroclor-1268	1	mg/kg	0.029	ND

Surrogate	Conc.	Spike	Low Limit	High Limit	Recovery	Flags
TCMX-Surrogate	73.88	100	30	150	74	
TCMX-Surrogate	66.96	100	30	150	67	
DCB-Surrogate	65.20	100	30	150	65	
DCB-Surrogate	56.07	100	30	150	56	

pH 9040C/9045D

Analyte	DF	Units	RL	Result
pH	1	ph		10

Sample ID: SB24
Lab#: AC88606-021
Matrix: Soil

Collection Date: 12/4/2015
Receipt Date: 12/6/2015

Reactive Cyanide

Analyte	DF	Units	RL	Result
Cyanide (Reactive)	1	mg/kg	0.50	ND

Reactive Sulfide

Analyte	DF	Units	RL	Result
Sulfide (Reactive)	1	mg/kg	100	ND

TCLP Metals 6010

Analyte	DF	Units	RL	Result
Arsenic	1	mg/l	0.10	ND
Barium	**1**	**mg/l**	**0.25**	**0.40**
Cadmium	1	mg/l	0.050	ND
Chromium	1	mg/l	0.10	ND
Lead	1	mg/l	0.050	ND
Nickel	1	mg/l	0.10	ND
Selenium	1	mg/l	0.10	ND
Silver	1	mg/l	0.050	ND

Total PetroleumHydrocarbons8015B(C8-C40)

Analyte	DF	Units	RL	Result
Total Petroleum Hydrocarbons	1	mg/kg	69	ND

Volatile Organics (no search) 8260

Analyte	DF	Units	RL	Result
1,1,1-Trichloroethane	0.887	mg/kg	0.0020	ND
1,1,2,2-Tetrachloroethane	0.887	mg/kg	0.0020	ND
1,1,2-Trichloro-1,2,2-trifluoroethane	0.887	mg/kg	0.0020	ND
1,1,2-Trichloroethane	0.887	mg/kg	0.0020	ND
1,1-Dichloroethane	0.887	mg/kg	0.0020	ND
1,1-Dichloroethene	0.887	mg/kg	0.0020	ND
1,2,3-Trichlorobenzene	0.887	mg/kg	0.0020	ND
1,2,4-Trichlorobenzene	0.887	mg/kg	0.0020	ND
1,2-Dibromo-3-chloropropane	0.887	mg/kg	0.0020	ND
1,2-Dibromoethane	0.887	mg/kg	0.0020	ND
1,2-Dichlorobenzene	0.887	mg/kg	0.0020	ND
1,2-Dichloroethane	0.887	mg/kg	0.0010	ND
1,2-Dichloropropane	0.887	mg/kg	0.0020	ND
1,3-Dichlorobenzene	0.887	mg/kg	0.0020	ND
1,4-Dichlorobenzene	0.887	mg/kg	0.0020	ND
1,4-Dioxane	0.887	mg/kg	0.10	ND
2-Butanone	0.887	mg/kg	0.0020	ND
2-Hexanone	0.887	mg/kg	0.0020	ND
4-Methyl-2-pentanone	0.887	mg/kg	0.0020	ND
Acetone	0.887	mg/kg	0.010	ND
Benzene	0.887	mg/kg	0.0010	ND
Bromochloromethane	0.887	mg/kg	0.0020	ND
Bromodichloromethane	0.887	mg/kg	0.0020	ND
Bromoform	0.887	mg/kg	0.0020	ND
Bromomethane	0.887	mg/kg	0.0020	ND
Carbon disulfide	0.887	mg/kg	0.0020	ND
Carbon tetrachloride	0.887	mg/kg	0.0020	ND
Chlorobenzene	0.887	mg/kg	0.0020	ND
Chloroethane	0.887	mg/kg	0.0020	ND
Chloroform	0.887	mg/kg	0.0020	ND
Chloromethane	0.887	mg/kg	0.0020	ND
cis-1,2-Dichloroethene	0.887	mg/kg	0.0020	ND
cis-1,3-Dichloropropene	0.887	mg/kg	0.0020	ND
Cyclohexane	0.887	mg/kg	0.0020	ND
Dibromochloromethane	0.887	mg/kg	0.0020	ND
Dichlorodifluoromethane	0.887	mg/kg	0.0020	ND
Ethylbenzene	0.887	mg/kg	0.0010	ND
Isopropylbenzene	0.887	mg/kg	0.0010	ND
m&p-Xylenes	0.887	mg/kg	0.0010	ND
Methyl Acetate	0.887	mg/kg	0.0020	ND
Methylcyclohexane	0.887	mg/kg	0.0020	ND
Methylene chloride	**0.887**	**mg/kg**	**0.0020**	**0.0050**

HA7-162

Sample ID: SB24
Lab#: AC88606-021
Matrix: Soil

Collection Date: 12/4/2015
Receipt Date: 12/6/2015

Methyl-t-butyl ether	0.887	mg/kg	0.0010	ND
o-Xylene	0.887	mg/kg	0.0010	ND
Styrene	0.887	mg/kg	0.0020	ND
Tetrachloroethene	0.887	mg/kg	0.0020	ND
Toluene	0.887	mg/kg	0.0010	ND
trans-1,2-Dichloroethene	0.887	mg/kg	0.0020	ND
trans-1,3-Dichloropropene	0.887	mg/kg	0.0020	ND
Trichloroethene	0.887	mg/kg	0.0020	ND
Trichlorofluoromethane	0.887	mg/kg	0.0020	ND
Vinyl chloride	0.887	mg/kg	0.0020	ND
Xylenes (Total)	0.887	mg/kg	0.0010	ND

Surrogate	Conc.	Spike	Low Limit	High Limit	Recovery	Flags
Toluene-d8	28.87	30	70	130	96	
Dibromofluoromethane	33.83	30	70	130	113	
Bromofluorobenzene	30.40	30	70	130	101	
1,2-Dichloroethane-d4	30.31	30	70	130	101	

Sample ID: SB25 | **Collection Date: 12/4/2015**
Lab#: AC88606-022 | **Receipt Date: 12/6/2015**
Matrix: Soil

% Solids SM2540G

Analyte	DF	Units	RL	Result
% Solids	1	percent		94

Ignitability (EPA 1030)

Analyte	DF	Units	RL	Result
Burning Rate (mm/sec)	1			NA
Flame Propagation (POS/NEG)	1			NA
Ignitability Screen (POS/NEG)	1			NEG

Mercury (TCLP) 7470A

Analyte	DF	Units	RL	Result
Mercury	1	mg/l	0.00070	ND

PAH Compounds 8270

Analyte	DF	Units	RL	Result
2-Methylnaphthalene	1	mg/kg	0.035	0.039
Acenaphthene	1	mg/kg	0.035	0.054
Acenaphthylene	1	mg/kg	0.035	0.036
Anthracene	1	mg/kg	0.035	0.070
Benzo[a]anthracene	1	mg/kg	0.035	0.10
Benzo[a]pyrene	1	mg/kg	0.035	0.14
Benzo[b]fluoranthene	1	mg/kg	0.035	0.18
Benzo[g,h,i]perylene	1	mg/kg	0.035	0.14
Benzo[k]fluoranthene	1	mg/kg	0.035	0.055
Chrysene	1	mg/kg	0.035	0.12
Dibenzo[a,h]anthracene	1	mg/kg	0.035	0.050
Fluoranthene	1	mg/kg	0.035	0.15
Fluorene	1	mg/kg	0.035	0.053
Indeno[1,2,3-cd]pyrene	1	mg/kg	0.035	0.11
Naphthalene	1	mg/kg	0.0089	0.041
Phenanthrene	1	mg/kg	0.035	0.19
Pyrene	1	mg/kg	0.035	0.21

Surrogate	Conc.	Spike	Low Limit	High Limit	Recovery	Flags
Terphenyl-d14	57.72	50	30	130	115	
Phenol-d5	88.56	100	30	130	89	
Nitrobenzene-d5	45.19	50	30	130	90	
2-Fluorophenol	83.18	100	30	130	83	
2-Fluorobiphenyl	49.37	50	30	130	99	
2,4,6-Tribromophenol	51.06	100	30	130	51	

Paint Filter Test 9095A

Analyte	DF	Units	RL	Result
Paint Filter Test	1			NEG

PCB 8082

Analyte	DF	Units	RL	Result
Aroclor (Total)	1	mg/kg	0.027	ND
Aroclor-1016	1	mg/kg	0.027	ND
Aroclor-1221	1	mg/kg	0.027	ND
Aroclor-1232	1	mg/kg	0.027	ND
Aroclor-1242	1	mg/kg	0.027	ND
Aroclor-1248	1	mg/kg	0.027	ND
Aroclor-1254	1	mg/kg	0.027	ND
Aroclor-1260	1	mg/kg	0.027	ND
Aroclor-1262	1	mg/kg	0.027	ND
Aroclor-1268	1	mg/kg	0.027	ND

Surrogate	Conc.	Spike	Low Limit	High Limit	Recovery	Flags
TCMX-Surrogate	78.15	100	30	150	78	
TCMX-Surrogate	69.99	100	30	150	70	
DCB-Surrogate	67.39	100	30	150	67	
DCB-Surrogate	56.31	100	30	150	56	

pH 9040C/9045D

Analyte	DF	Units	RL	Result
pH	1	ph		12

H47 - 165

Sample ID: SB25	**Collection Date: 12/4/2015**
Lab#: AC88606-022	**Receipt Date: 12/6/2015**
Matrix: Soil	

Reactive Cyanide

Analyte	DF	Units	RL	Result
Cyanide (Reactive)	1	mg/kg	0.50	ND

Reactive Sulfide

Analyte	DF	Units	RL	Result
Sulfide (Reactive)	1	mg/kg	100	ND

TCLP Metals 6010

Analyte	DF	Units	RL	Result
Arsenic	1	mg/l	0.10	ND
Barium	**1**	**mg/l**	**0.25**	**0.46**
Cadmium	1	mg/l	0.050	ND
Chromium	1	mg/l	0.10	ND
Lead	**1**	**mg/l**	**0.050**	**0.071**
Nickel	1	mg/l	0.10	ND
Selenium	1	mg/l	0.10	ND
Silver	1	mg/l	0.050	ND

Total PetroleumHydrocarbons8015B(C8-C40)

Analyte	DF	Units	RL	Result
Total Petroleum Hydrocarbons	**1**	**mg/kg**	**64**	**170**

Volatile Organics (no search) 8260

Analyte	DF	Units	RL	Result
1,1,1-Trichloroethane	0.907	mg/kg	0.0019	ND
1,1,2,2-Tetrachloroethane	0.907	mg/kg	0.0019	ND
1,1,2-Trichloro-1,2,2-trifluoroethane	0.907	mg/kg	0.0019	ND
1,1,2-Trichloroethane	0.907	mg/kg	0.0019	ND
1,1-Dichloroethane	0.907	mg/kg	0.0019	ND
1,1-Dichloroethene	0.907	mg/kg	0.0019	ND
1,2,3-Trichlorobenzene	0.907	mg/kg	0.0019	ND
1,2,4-Trichlorobenzene	0.907	mg/kg	0.0019	ND
1,2-Dibromo-3-chloropropane	0.907	mg/kg	0.0019	ND
1,2-Dibromoethane	0.907	mg/kg	0.0019	ND
1,2-Dichlorobenzene	0.907	mg/kg	0.0019	ND
1,2-Dichloroethane	0.907	mg/kg	0.00097	ND
1,2-Dichloropropane	0.907	mg/kg	0.0019	ND
1,3-Dichlorobenzene	0.907	mg/kg	0.0019	ND
1,4-Dichlorobenzene	0.907	mg/kg	0.0019	ND
1,4-Dioxane	0.907	mg/kg	0.097	ND
2-Butanone	0.907	mg/kg	0.0019	ND
2-Hexanone	0.907	mg/kg	0.0019	ND
4-Methyl-2-pentanone	0.907	mg/kg	0.0019	ND
Acetone	0.907	mg/kg	0.0097	ND
Benzene	0.907	mg/kg	0.00097	ND
Bromochloromethane	0.907	mg/kg	0.0019	ND
Bromodichloromethane	0.907	mg/kg	0.0019	ND
Bromoform	0.907	mg/kg	0.0019	ND
Bromomethane	0.907	mg/kg	0.0019	ND
Carbon disulfide	0.907	mg/kg	0.0019	ND
Carbon tetrachloride	0.907	mg/kg	0.0019	ND
Chlorobenzene	0.907	mg/kg	0.0019	ND
Chloroethane	0.907	mg/kg	0.0019	ND
Chloroform	0.907	mg/kg	0.0019	ND
Chloromethane	0.907	mg/kg	0.0019	ND
cis-1,2-Dichloroethene	0.907	mg/kg	0.0019	ND
cis-1,3-Dichloropropene	0.907	mg/kg	0.0019	ND
Cyclohexane	0.907	mg/kg	0.0019	ND
Dibromochloromethane	0.907	mg/kg	0.0019	ND
Dichlorodifluoromethane	0.907	mg/kg	0.0019	ND
Ethylbenzene	0.907	mg/kg	0.00097	ND
Isopropylbenzene	0.907	mg/kg	0.00097	ND
m&p-Xylenes	0.907	mg/kg	0.00097	ND
Methyl Acetate	0.907	mg/kg	0.0019	ND
Methylcyclohexane	0.907	mg/kg	0.0019	ND
Methylene chloride	0.907	mg/kg	0.0019	ND

Sample ID: SB25 **Collection Date: 12/4/2015**
Lab#: AC88606-022 **Receipt Date: 12/6/2015**
Matrix: Soil

Methyl-t-butyl ether	0.907	mg/kg	0.00097	ND
o-Xylene	0.907	mg/kg	0.00097	ND
Styrene	0.907	mg/kg	0.0019	ND
Tetrachloroethene	0.907	mg/kg	0.0019	ND
Toluene	0.907	mg/kg	0.00097	ND
trans-1,2-Dichloroethene	0.907	mg/kg	0.0019	ND
trans-1,3-Dichloropropene	0.907	mg/kg	0.0019	ND
Trichloroethene	0.907	mg/kg	0.0019	ND
Trichlorofluoromethane	0.907	mg/kg	0.0019	ND
Vinyl chloride	0.907	mg/kg	0.0019	ND
Xylenes (Total)	0.907	mg/kg	0.00097	ND

Surrogate	Conc.	Spike	Low Limit	High Limit	Recovery	Flags
Toluene-d8	28.89	30	70	130	96	
Dibromofluoromethane	33.43	30	70	130	111	
Bromofluorobenzene	30.88	30	70	130	103	
1,2-Dichloroethane-d4	31.93	30	70	130	106	

Sample ID: SB26	**Collection Date: 12/4/2015**
Lab#: AC88606-023	**Receipt Date: 12/6/2015**
Matrix: Soil	

% Solids SM2540G

Analyte	DF	Units	RL	Result
% Solids	**1**	**percent**		**88**

Ignitability (EPA 1030)

Analyte	DF	Units	RL	Result
Burning Rate (mm/sec)	**1**			**NA**
Flame Propagation (POS/NEG)	**1**			**NA**
Ignitability Screen (POS/NEG)	**1**			**NEG**

Mercury (TCLP) 7470A

Analyte	DF	Units	RL	Result
Mercury	1	mg/l	0.00070	ND

PAH Compounds 8270

Analyte	DF	Units	RL	Result
2-Methylnaphthalene	1	mg/kg	0.038	ND
Acenaphthene	1	mg/kg	0.038	ND
Acenaphthylene	1	mg/kg	0.038	ND
Anthracene	1	mg/kg	0.038	ND
Benzo[a]anthracene	**1**	**mg/kg**	**0.038**	**0.067**
Benzo[a]pyrene	**1**	**mg/kg**	**0.038**	**0.076**
Benzo[b]fluoranthene	**1**	**mg/kg**	**0.038**	**0.092**
Benzo[g,h,i]perylene	**1**	**mg/kg**	**0.038**	**0.074**
Benzo[k]fluoranthene	1	mg/kg	0.038	ND
Chrysene	**1**	**mg/kg**	**0.038**	**0.066**
Dibenzo[a,h]anthracene	1	mg/kg	0.038	ND
Fluoranthene	**1**	**mg/kg**	**0.038**	**0.098**
Fluorene	1	mg/kg	0.038	ND
Indeno[1,2,3-cd]pyrene	**1**	**mg/kg**	**0.038**	**0.058**
Naphthalene	1	mg/kg	0.0095	ND
Phenanthrene	**1**	**mg/kg**	**0.038**	**0.075**
Pyrene	**1**	**mg/kg**	**0.038**	**0.13**

Surrogate	Conc.	Spike	Low Limit	High Limit	Recovery	Flags
Terphenyl-d14	49.59	50	30	130	99	
Phenol-d5	69.70	100	30	130	70	
Nitrobenzene-d5	40.19	50	30	130	80	
2-Fluorophenol	69.53	100	30	130	70	
2-Fluorobiphenyl	43.70	50	30	130	87	
2,4,6-Tribromophenol	69.85	100	30	130	70	

Paint Filter Test 9095A

Analyte	DF	Units	RL	Result
Paint Filter Test	**1**			**NEG**

PCB 8082

Analyte	DF	Units	RL	Result
Aroclor (Total)	1	mg/kg	0.028	ND
Aroclor-1016	1	mg/kg	0.028	ND
Aroclor-1221	1	mg/kg	0.028	ND
Aroclor-1232	1	mg/kg	0.028	ND
Aroclor-1242	1	mg/kg	0.028	ND
Aroclor-1248	1	mg/kg	0.028	ND
Aroclor-1254	1	mg/kg	0.028	ND
Aroclor-1260	1	mg/kg	0.028	ND
Aroclor-1262	1	mg/kg	0.028	ND
Aroclor-1268	1	mg/kg	0.028	ND

Surrogate	Conc.	Spike	Low Limit	High Limit	Recovery	Flags
TCMX-Surrogate	79.03	100	30	150	79	
TCMX-Surrogate	72.81	100	30	150	73	
DCB-Surrogate	67.96	100	30	150	68	
DCB-Surrogate	58.44	100	30	150	58	

pH 9040C/9045D

Analyte	DF	Units	RL	Result
pH	**1**	**ph**		**10**

Sample ID: SB26
Lab#: AC88606-023
Matrix: Soil

Collection Date: 12/4/2015
Receipt Date: 12/6/2015

Reactive Cyanide

Analyte	DF	Units	RL	Result
Cyanide (Reactive)	1	mg/kg	0.50	ND

Reactive Sulfide

Analyte	DF	Units	RL	Result
Sulfide (Reactive)	1	mg/kg	100	ND

TCLP Metals 6010

Analyte	DF	Units	RL	Result
Arsenic	1	mg/l	0.10	ND
Barium	**1**	**mg/l**	**0.25**	**0.37**
Cadmium	1	mg/l	0.050	ND
Chromium	1	mg/l	0.10	ND
Lead	1	mg/l	0.050	ND
Nickel	1	mg/l	0.10	ND
Selenium	1	mg/l	0.10	ND
Silver	1	mg/l	0.050	ND

Total PetroleumHydrocarbons8015B(C8-C40)

Analyte	DF	Units	RL	Result
Total Petroleum Hydrocarbons	1	mg/kg	68	ND

Volatile Organics (no search) 8260

Analyte	DF	Units	RL	Result
1,1,1-Trichloroethane	0.942	mg/kg	0.0021	ND
1,1,2,2-Tetrachloroethane	0.942	mg/kg	0.0021	ND
1,1,2-Trichloro-1,2,2-trifluoroethane	0.942	mg/kg	0.0021	ND
1,1,2-Trichloroethane	0.942	mg/kg	0.0021	ND
1,1-Dichloroethane	0.942	mg/kg	0.0021	ND
1,1-Dichloroethene	0.942	mg/kg	0.0021	ND
1,2,3-Trichlorobenzene	0.942	mg/kg	0.0021	ND
1,2,4-Trichlorobenzene	0.942	mg/kg	0.0021	ND
1,2-Dibromo-3-chloropropane	0.942	mg/kg	0.0021	ND
1,2-Dibromoethane	0.942	mg/kg	0.0021	ND
1,2-Dichlorobenzene	0.942	mg/kg	0.0021	ND
1,2-Dichloroethane	0.942	mg/kg	0.0011	ND
1,2-Dichloropropane	0.942	mg/kg	0.0021	ND
1,3-Dichlorobenzene	0.942	mg/kg	0.0021	ND
1,4-Dichlorobenzene	0.942	mg/kg	0.0021	ND
1,4-Dioxane	0.942	mg/kg	0.11	ND
2-Butanone	0.942	mg/kg	0.0021	ND
2-Hexanone	0.942	mg/kg	0.0021	ND
4-Methyl-2-pentanone	0.942	mg/kg	0.0021	ND
Acetone	0.942	mg/kg	0.011	ND
Benzene	0.942	mg/kg	0.0011	ND
Bromochloromethane	0.942	mg/kg	0.0021	ND
Bromodichloromethane	0.942	mg/kg	0.0021	ND
Bromoform	0.942	mg/kg	0.0021	ND
Bromomethane	0.942	mg/kg	0.0021	ND
Carbon disulfide	0.942	mg/kg	0.0021	ND
Carbon tetrachloride	0.942	mg/kg	0.0021	ND
Chlorobenzene	0.942	mg/kg	0.0021	ND
Chloroethane	0.942	mg/kg	0.0021	ND
Chloroform	0.942	mg/kg	0.0021	ND
Chloromethane	0.942	mg/kg	0.0021	ND
cis-1,2-Dichloroethene	0.942	mg/kg	0.0021	ND
cis-1,3-Dichloropropene	0.942	mg/kg	0.0021	ND
Cyclohexane	0.942	mg/kg	0.0021	ND
Dibromochloromethane	0.942	mg/kg	0.0021	ND
Dichlorodifluoromethane	0.942	mg/kg	0.0021	ND
Ethylbenzene	0.942	mg/kg	0.0011	ND
Isopropylbenzene	0.942	mg/kg	0.0011	ND
m&p-Xylenes	0.942	mg/kg	0.0011	ND
Methyl Acetate	0.942	mg/kg	0.0021	ND
Methylcyclohexane	0.942	mg/kg	0.0021	ND
Methylene chloride	**0.942**	**mg/kg**	**0.0021**	**0.0031**

NOTE: Soil Results are reported to Dry Weight

Sample ID: SB26
Lab#: AC88606-023
Matrix: Soil

Collection Date: 12/4/2015
Receipt Date: 12/6/2015

Methyl-t-butyl ether	0.942	mg/kg	0.0011	ND
o-Xylene	0.942	mg/kg	0.0011	ND
Styrene	0.942	mg/kg	0.0021	ND
Tetrachloroethene	0.942	mg/kg	0.0021	ND
Toluene	0.942	mg/kg	0.0011	ND
trans-1,2-Dichloroethene	0.942	mg/kg	0.0021	ND
trans-1,3-Dichloropropene	0.942	mg/kg	0.0021	ND
Trichloroethene	0.942	mg/kg	0.0021	ND
Trichlorofluoromethane	0.942	mg/kg	0.0021	ND
Vinyl chloride	0.942	mg/kg	0.0021	ND
Xylenes (Total)	0.942	mg/kg	0.0011	ND

Surrogate	Conc.	Spike	Low Limit	High Limit	Recovery	Flags
Toluene-d8	29.33	30	70	130	98	
Dibromofluoromethane	34.17	30	70	130	114	
Bromofluorobenzene	27.39	30	70	130	91	
1,2-Dichloroethane-d4	35.22	30	70	130	117	

Sample ID: SB27 | **Collection Date: 12/4/2015**
Lab#: AC88606-024 | **Receipt Date: 12/6/2015**
Matrix: Soil

% Solids SM2540G

Analyte	DF	Units	RL	Result
%Solids	**1**	**percent**		**88**

Ignitability (EPA 1030)

Analyte	DF	Units	RL	Result
Burning Rate (mm/sec)	**1**			**NA**
Flame Propagation (POS/NEG)	**1**			**NA**
Ignitability Screen (POS/NEG)	**1**			**NEG**

Mercury (TCLP) 7470A

Analyte	DF	Units	RL	Result
Mercury	1	mg/l	0.00070	ND

PAH Compounds 8270

Analyte	DF	Units	RL	Result
2-Methylnaphthalene	1	mg/kg	0.038	ND
Acenaphthene	1	mg/kg	0.038	ND
Acenaphthylene	1	mg/kg	0.038	ND
Anthracene	1	mg/kg	0.038	ND
Benzo[a]anthracene	1	mg/kg	0.038	ND
Benzo[a]pyrene	1	mg/kg	0.038	ND
Benzo[b]fluoranthene	1	mg/kg	0.038	ND
Benzo[g,h,i]perylene	1	mg/kg	0.038	ND
Benzo[k]fluoranthene	1	mg/kg	0.038	ND
Chrysene	1	mg/kg	0.038	ND
Dibenzo[a,h]anthracene	1	mg/kg	0.038	ND
Fluoranthene	1	mg/kg	0.038	ND
Fluorene	1	mg/kg	0.038	ND
Indeno[1,2,3-cd]pyrene	1	mg/kg	0.038	ND
Naphthalene	1	mg/kg	0.0095	ND
Phenanthrene	1	mg/kg	0.038	ND
Pyrene	1	mg/kg	0.038	ND

Surrogate	Conc.	Spike	Low Limit	High Limit	Recovery	Flags
Terphenyl-d14	52.65	50	30	130	105	
Phenol-d5	75.73	100	30	130	76	
Nitrobenzene-d5	42.39	50	30	130	85	
2-Fluorophenol	75.86	100	30	130	76	
2-Fluorobiphenyl	46.55	50	30	130	93	
2,4,6-Tribromophenol	93.98	100	30	130	94	

Paint Filter Test 9095A

Analyte	DF	Units	RL	Result
Paint Filter Test	**1**			**NEG**

PCB 8082

Analyte	DF	Units	RL	Result
Aroclor (Total)	**1**	**mg/kg**	**0.028**	**0.19**
Aroclor-1016	1	mg/kg	0.028	ND
Aroclor-1221	1	mg/kg	0.028	ND
Aroclor-1232	1	mg/kg	0.028	ND
Aroclor-1242	1	mg/kg	0.028	ND
Aroclor-1248	1	mg/kg	0.028	ND
Aroclor-1254	1	mg/kg	0.028	ND
Aroclor-1260	**1**	**mg/kg**	**0.028**	**0.19**
Aroclor-1262	1	mg/kg	0.028	ND
Aroclor-1268	1	mg/kg	0.028	ND

Surrogate	Conc.	Spike	Low Limit	High Limit	Recovery	Flags
TCMX-Surrogate	80.22	100	30	150	80	
TCMX-Surrogate	73.20	100	30	150	73	
DCB-Surrogate	72.37	100	30	150	72	
DCB-Surrogate	62.16	100	30	150	62	

pH 9040C/9045D

Analyte	DF	Units	RL	Result
pH	**1**	**ph**		**9**

HAZ-171

Sample ID: SB27	**Collection Date: 12/4/2015**
Lab#: AC88606-024	**Receipt Date: 12/6/2015**
Matrix: Soil	

Reactive Cyanide

Analyte	DF	Units	RL	Result
Cyanide (Reactive)	1	mg/kg	0.50	ND

Reactive Sulfide

Analyte	DF	Units	RL	Result
Sulfide (Reactive)	1	mg/kg	100	ND

TCLP Metals 6010

Analyte	DF	Units	RL	Result
Arsenic	1	mg/l	0.10	ND
Barium	**1**	**mg/l**	**0.25**	**0.36**
Cadmium	1	mg/l	0.050	ND
Chromium	1	mg/l	0.10	ND
Lead	1	mg/l	0.050	ND
Nickel	1	mg/l	0.10	ND
Selenium	1	mg/l	0.10	ND
Silver	1	mg/l	0.050	ND

Total PetroleumHydrocarbons8015B(C8-C40)

Analyte	DF	Units	RL	Result
Total Petroleum Hydrocarbons	**1**	**mg/kg**	**68**	**120**

Volatile Organics (no search) 8260

Analyte	DF	Units	RL	Result
1,1,1-Trichloroethane	0.914	mg/kg	0.0021	ND
1,1,2,2-Tetrachloroethane	0.914	mg/kg	0.0021	ND
1,1,2-Trichloro-1,2,2-trifluoroethane	0.914	mg/kg	0.0021	ND
1,1,2-Trichloroethane	0.914	mg/kg	0.0021	ND
1,1-Dichloroethane	0.914	mg/kg	0.0021	ND
1,1-Dichloroethene	0.914	mg/kg	0.0021	ND
1,2,3-Trichlorobenzene	0.914	mg/kg	0.0021	ND
1,2,4-Trichlorobenzene	0.914	mg/kg	0.0021	ND
1,2-Dibromo-3-chloropropane	0.914	mg/kg	0.0021	ND
1,2-Dibromoethane	0.914	mg/kg	0.0021	ND
1,2-Dichlorobenzene	0.914	mg/kg	0.0021	ND
1,2-Dichloroethane	0.914	mg/kg	0.0010	ND
1,2-Dichloropropane	0.914	mg/kg	0.0021	ND
1,3-Dichlorobenzene	0.914	mg/kg	0.0021	ND
1,4-Dichlorobenzene	0.914	mg/kg	0.0021	ND
1,4-Dioxane	0.914	mg/kg	0.10	ND
2-Butanone	0.914	mg/kg	0.0021	ND
2-Hexanone	0.914	mg/kg	0.0021	ND
4-Methyl-2-pentanone	0.914	mg/kg	0.0021	ND
Acetone	0.914	mg/kg	0.010	ND
Benzene	0.914	mg/kg	0.0010	ND
Bromochloromethane	0.914	mg/kg	0.0021	ND
Bromodichloromethane	0.914	mg/kg	0.0021	ND
Bromoform	0.914	mg/kg	0.0021	ND
Bromomethane	0.914	mg/kg	0.0021	ND
Carbon disulfide	0.914	mg/kg	0.0021	ND
Carbon tetrachloride	0.914	mg/kg	0.0021	ND
Chlorobenzene	0.914	mg/kg	0.0021	ND
Chloroethane	0.914	mg/kg	0.0021	ND
Chloroform	0.914	mg/kg	0.0021	ND
Chloromethane	0.914	mg/kg	0.0021	ND
cis-1,2-Dichloroethene	0.914	mg/kg	0.0021	ND
cis-1,3-Dichloropropene	0.914	mg/kg	0.0021	ND
Cyclohexane	0.914	mg/kg	0.0021	ND
Dibromochloromethane	0.914	mg/kg	0.0021	ND
Dichlorodifluoromethane	0.914	mg/kg	0.0021	ND
Ethylbenzene	0.914	mg/kg	0.0010	ND
Isopropylbenzene	0.914	mg/kg	0.0010	ND
m&p-Xylenes	0.914	mg/kg	0.0010	ND
Methyl Acetate	0.914	mg/kg	0.0021	ND
Methylcyclohexane	0.914	mg/kg	0.0021	ND
Methylene chloride	**0.914**	**mg/kg**	**0.0021**	**0.0024**

Sample ID: SB27 **Collection Date: 12/4/2015**
Lab#: AC88606-024 **Receipt Date: 12/6/2015**
Matrix: Soil

Methyl-t-butyl ether	0.914	mg/kg	0.0010	ND
o-Xylene	0.914	mg/kg	0.0010	ND
Styrene	0.914	mg/kg	0.0021	ND
Tetrachloroethene	0.914	mg/kg	0.0021	ND
Toluene	0.914	mg/kg	0.0010	ND
trans-1,2-Dichloroethene	0.914	mg/kg	0.0021	ND
trans-1,3-Dichloropropene	0.914	mg/kg	0.0021	ND
Trichloroethene	0.914	mg/kg	0.0021	ND
Trichlorofluoromethane	0.914	mg/kg	0.0021	ND
Vinyl chloride	0.914	mg/kg	0.0021	ND
Xylenes (Total)	0.914	mg/kg	0.0010	ND

Surrogate	Conc.	Spike	Low Limit	High Limit	Recovery	Flags
Toluene-d8	28.72	30	70	130	96	
Dibromofluoromethane	34.00	30	70	130	113	
Bromofluorobenzene	31.00	30	70	130	103	
1,2-Dichloroethane-d4	31.77	30	70	130	106	

Hampton-Clarke, Inc. (WBE/DBE/SBE)
175 Route 46 West and 2 Madison Road, Fairfield, New Jersey 07004
Ph: 800-426-9992 | 973-244-9770 Fax: 973-244-9767 | 973-439-1458
Service Center: 137-D Gaither Drive, Mount Laurel, New Jersey 08054
Ph (Service Center): 856-780-6057 Fax: 856-780-6058
NELAC/NJ #07071 | PA #68-00463 | NY #11408 | CT #PH-0671 | KY #90124 | DE HSCA Approved

Hampton-Clarke
A Women-Owned, Disadvantaged, Small Business Enterprise

CHAIN OF CUSTODY RECORD

Project # (Lab Use Only): 5120701

Page 1 of 3

3) Reporting Requirements (Please Circle)

Turnaround	Report Type	Electronic Deliv.
When Available:	Data Summary	Hazsite/CSV
1 Business Day (100%)*	Results + QC (Waste)	EnviroData
2 Business Days (75%)*	NJ Reduced	Excel - NJ Regulatory
3 Business Days (50%)*	NY Reduced	Excel - NY Regulatory
4 Business Days (35%)*	PA Reduced	Excel - PA Regulatory
5 Business Days (25%)	Full / Category B	EQuIS (specify below):
10 Business Days (Stand.)	Category A	4-File/EZ/NYS/Reg. 2 or 5
Other:	Electronic (PDF)	Other:

* Expedited TAT Not Always Available. Please Check with Lab.

Customer Information

1a) Customer: LOUIS BERGER
Address: 48 WALL ST., 16th Fl
NEW YORK, NY 10005
1b) Email/Cell/Fax/Ph:
1c) Send Invoice to: BRENNA GRIBBLE
1d) Send Report to: 1 — 11 —

Project Information

2a) Project: Astoria Trunk Ph II
2b) Project Mgr: Fameeda Ali
2c) Project Location (City/State): Queens, NY
2d) Quote/PO # (If Applicable):

FOR LAB USE ONLY ↓
Batch # AC88606

Matrix Codes: DW - Drinking Water; GW - Ground Water; WW - Waste Water; S - Soil; SL - Sludge; OL - Oil; A - Air; OT - Other (please specify under Item 9, Comments)

7) Analysis (specify methods & parameter lists) — Check If Contingent

8) # of Bottles — Check If Contingent

Lab Sample #	4) Customer Sample ID	5) Matrix	6) Sample Date	6) Sample Time	Composite (C)	Grab (G)	TCL VOC 8260C	PAH 8270C	TPH-DRO/GRO 8015B	PCB 8082A/1668	TCLP Metals 1311/6010B	RCRA Chem. incl. ignitability, reactivity, corrosivity, 1020B/9012/1020B/9045	Paint Filter 9095B	None	MeOH	En Core	NaOH	HCl	H2SO4	HNO3	Other:	9) Comments
-001	SB28	S	12/4/15	1000	X	X	X	X	X	X	X	X	X	X	3							
-002	SB29			1110																		
-003	SB30			1140																		
-004	SB31			1215																		
-005	SB33			1315																		
-006	SB34			1350																		
-007	SB35			1430																		
-008	SB36			1500																		

10) Relinquished by:	Accepted by:	Date	Time
[signature]	[signature]	12/4/15	17:36

Comments, Notes, Special Requirements, HAZARDS

Indicate if low-level methods required to meet current groundwater standards (SPLP for soil):
- [ ] BN or BNA (8270D SIM)
- [ ] VOC (8260C SIM or 8011)
- [ ] SPLP (BN, BNA, Metals)

Check if applicable:
- [ ] Project-Specific Reporting Limits
- [ ] High Contaminant Concentrations
- [ ] NJ LSRP Project (also check boxes above/right)

For NNJ LSRP projects, indicate which standards need to be met:
- [ ] NJDEP GWQS
- [ ] NJDEP SRS
- [ ] NJDEP SPLP
- [ ] Other (specify):

Cooler Temperature: 2.7, 3.4

11) Sampler (print name): J. Lacaglia Date: 12/4/15

Please note NUMBERED items. If not completed your analytical work m[illegible] delayed.
A fee of $5/sample will be assessed for storage should sample not be activated f[illegible] analysis.

Additional Notes

HA2-174

Hampton-Clarke, Inc. (WBE/DBE/SBE)
175 Rou[redacted]st and 2 Madison Road, Fairfield, New Jersey 07004
Ph: 800-[redacted]2 | 973-244-9770 Fax: 973-244-9787 | 973-439-1458
Service Center: 137-D Gaither Drive, Mount Laurel, New Jersey 08054
Ph (Service Center): 856-780-6057 Fax: 856-780-6056

Hampton-Clarke

C[redacted] OF CUSTODY RECORD

A Women-Owned, Disadvantaged, Small Business Enterprise

NELAC/NJ #07071 | PA #68-00463 | NY #11408 | CT #PH-0671 | KY #90124 | DE HSCA Approved

Project # (Lab Use Only): S120701

Page 2 [redacted]3

3) Reporting Requirements (Please Circle)

Turnaround	Report Type	Electronic Deliv.
When Available:	Data Summary	Hazsite/CSV
1 Business Day (100%)*	Results + QC (Waste)	EnviroData
2 Business Days (75%)*	NJ Reduced	Excel - NJ Regulatory
3 Business Days (50%)*	NY Reduced	Excel - NY Regulatory
4 Business Days (35%)*	PA Reduced	Excel - PA Regulatory
5 Business Days (25%)	Full / Category B	EQuIS (specify below):
10 Business Days (Stand.)	Category A	4-File/EZ/NYS/Reg. 2 or 5
Other:	Electronic (PDF)	Other:

* Expedited TAT Not Always Available. Please Check with Lab.

Customer Information

1a) Customer: Louis Berger
Address: 48 Wall St. 16th FL
New York, NY 10005
1b) Email/Cell/Fax/Ph:
1c) Send Invoice to: BREANNA GRIBBLE
1d) Send Report to: " "

Project Information

2a) Project: Astoria Trunk PH II
2b) Project Mgr: Famida Ali
2c) Project Location (City/State): Queens NY
2d) Quote/PO # (If Applicable):

FOR LAB USE ONLY ↓

Batch # AC88606

HAZ-175

Matrix Codes: DW - Drinking Water; GW - Ground Water; WW - Waste Water; S - Soil; SL - Sludge; OL - Oil; A - Air; OT - Other (please specify under Item 9, Comments)

7) Analysis (specify methods & parameter lists) ==> Check if Contingent ==> / <== Check if Contingent <==

Lab Sample #	4) Customer Sample ID	5) Matrix	6) Sample Date	6) Sample Time	Composite (C)	Grab (G)	TCL VOC 8260C	PAH 8270C	TPH-DRO/GRO 8015B	PCB 8082A/608	TCLP Metals 1311/6010B	RCRA characteristics incl. ignit. & react.	Corrosivity, 9040B/9045C	Paint Filter 9095				8) # of Bottles: None	MeOH	En Core	NaOH	HCl	H2SO4	HNO3	Other:	9) Comments
-009	SB01	S	12-3-15	1030	X	X	X	X	X	X	X	X	X	X				3								
-010	SB02		12-3-15	1100																						
-011	SB13			1145																						
-012	SB14			1210																						
-013	SB15			1320																						
-014	SB16			1345																						
-015	SB17			1440																						
-016	SB19			1530																						

10) Relinquished by / Accepted by

Relinquished by:	Accepted by:	Date	Time
[signature]	[signature]	12/4/15	17:36

Additional Notes

Comments, Notes, Special Requirements, HAZARDS

Indicate if low-level methods required to meet current groundwater standards (SPLP for soil):
- [ ] BN or BNA (8270D SIM)
- [ ] VOC (8260C SIM or 8011)
- [ ] SPLP (BN, BNA, Metals)

Check if applicable:
- [ ] Project-Specific Reporting Limits
- [ ] High Contaminant Concentrations
- [ ] NJ LSRP Project (also check boxes above/right)

For NNJ LSRP projects, indicate which standards need to be met:
- [ ] NJDEP GWQS
- [ ] NJDEP SRS
- [ ] NJDEP SPLP
- [ ] Other (specify):

Cooler Temperature

11) Sampler (print name): B. Caballero Date:

Please note NUMBERED items. If not completed your analytical work may be delayed.
A fee of $5/sample will be assessed for storage should sample not be activated for any analysis.

Hampton-Clarke, Inc. (WBE/DBE/SBE)
175 Route 46 West and 2 Madison Road, Fairfield, New Jersey 07004
Ph: 800-426-9992 | 973-244-9770 Fax: 973-244-9787 | 973-439-1458
Service Center: 137-D Gaither Drive, Mount Laurel, New Jersey 08054
Ph (Service Center): 856-780-6057 Fax: 856-780-6056

Hampton-Clarke

A Women-Owned, Disadvantaged, Small Business Enterprise

CHAIN OF CUSTODY RECORD

Project # (Lab Use Only): 312070

NELAC/NJ #07071 | PA #68-00463 | NY #11408 | CT #PH-0671 | KY #90124 | DE HSCA Approved

Customer Information

1a) Customer: Lewis Berger
Address: 48 Wall Street 16th Fl New York NY 10005
1b) Email/Cell/Fax/Ph:
1c) Send Invoice to: Breanna Gribble
1d) Send Report to: " "

Project Information

2a) Project: Astoria Trunk Ph II
2b) Project Mgr: Fameda Ali
2c) Project Location (City/State): Queens, NY
2d) Quote/PO # (If Applicable):

3) Reporting Requirements (Please Circle)

Turnaround	Report Type	Electronic Deliv.
When Available:	Data Summary	Hazsite/CSV
1 Business Day (100%)*	Results + QC (Waste)	EnviroData
2 Business Days (75%)*	NJ Reduced	Excel - NJ Regulatory
3 Business Days (50%)*	NY Reduced	Excel - NY Regulatory
4 Business Days (35%)*	PA Reduced	Excel - PA Regulatory
5 Business Days (25%)	Full / Category B	EQuIS (specify below):
10 Business Days (Stand.)	Category A	4-File/EZ/NYS/Reg. 2 or 5
Other:	Electronic (PDF)	Other:

* Expedited TAT Not Always Available. Please Check with Lab.

FOR LAB USE ONLY ↓

Batch # AC88606

==> Check if Contingent ==>

Matrix Codes
DW - Drinking Water; S - Soil; A - Air; GW - Ground Water; SL - Sludge; WW - Waste Water; OL - Oil; OT - Other (please specify under Item 9, Comments)

7) Analysis (specify methods & parameter lists)

<== Check if Contingent <==

Lab Sample #	4) Customer Sample ID	5) Matrix	6) Sample Date	6) Sample Time	Composite (C)	Grab (G)	TCL VOC 8260C	PAH 8270C	TPH DRO GRO 8015B	PCB 8082A/608	TCLP Metals 1311/6010	Reactivity, Ignitability, Corrosivity 9012A, 9034, 1030A, 1010A, 9045C	Paint Filter 9095B				8) # of Bottles: None	MeOH	En Core	NaOH	HCl	H2SO4	HNO3	Other	9) Comments
-017	SB 26	S	12-4-15	0945	X	X	X	X	X	X	X	X	X	X			3								
-018	SB21			1030																					
-019	SB22			1130																					
-020	SB23			1216																					
-021	SB24			1305																					
-022	SB25			1415																					
-023	SB26			1456																					
-024	SB27			1520																					

10) Relinquished by: [signature] **Accepted by:** [signature] **Date:** 12/4/15 **Time:** 17:36

Additional Notes

Comments, Notes, Special Requirements, HAZARDS

Indicate if low-level methods required to meet current groundwater standards (SPLP for soil):
- [ ] BN or BNA (8270D SIM)
- [ ] VOC (8260C SIM or 8011)
- [ ] SPLP (BN, BNA, Metals)

Check if applicable:
- [ ] Project-Specific Reporting Limits
- [ ] High Contaminant Concentrations
- [ ] NJ LSRP Project (also check boxes above/right)

For NNJ LSRP projects, indicate which standards need to be met:
- [ ] NJDEP GWQS
- [ ] NJDEP SRS
- [ ] NJDEP SPLP
- [ ] Other (specify):

Cooler Temperature

11) Sampler (print name): B. Carballo **Date:**

Please note NUMBERED items. If not completed your analytical work may be delayed. A fee of $5/sample will be assessed for storage should sample not be activated for analysis.

HAZ-178

Hampton-Clarke Report Of Analysis

Client: Louis Berger & Associates
Project: Astoria Trunk Ph II

HC Project #: 5120328

Sample ID: OW-7
Lab#: AC88558-010
Matrix: Aqueous

Collection Date: 12/3/2015
Receipt Date: 12/3/2015

Carbonaceous BOD-5 Day (SM5210 B-01)

Analyte	DF	Units	RL	Result
Carbonaceous Bod, 5 Day	1	mg/l	2.0	ND

Chloride (Water) 300.0

Analyte	DF	Units	RL	Result
Chloride	10	mg/l	20	360

Cr (Hexavalent) 3500-Cr B

Analyte	DF	Units	RL	Result
Cr (Hexavalent)	1	mg/l	0.025	ND

Flash Point 1010

Analyte	DF	Units	RL	Result
Flash Point	1	deg. f		>141

Mercury (Water) 245.1

Analyte	DF	Units	RL	Result
Mercury	1	ug/l	0.20	ND

Metals-Three 200.7

Analyte	DF	Units	RL	Result
Copper	1	ug/l	25	ND
Nickel	1	ug/l	10	ND
Zinc	1	ug/l	25	ND

Metals-Two 200.8

Analyte	DF	Units	RL	Result
Cadmium	1	ug/l	1.0	ND
Lead	1	ug/l	3.0	ND

Nitrate-N (Water) 300.0

Analyte	DF	Units	RL	Result
Nitrate	1	mg/l	1.0	12

Nitrite-N (Aqueous) 300.0

Analyte	DF	Units	RL	Result
Nitrite	1	mg/l	1.0	ND

PCB 608

Analyte	DF	Units	RL	Result
Aroclor (Total)	1	ug/l	0.053	ND
Aroclor-1016	1	ug/l	0.053	ND
Aroclor-1221	1	ug/l	0.053	ND
Aroclor-1232	1	ug/l	0.053	ND
Aroclor-1242	1	ug/l	0.053	ND
Aroclor-1248	1	ug/l	0.053	ND
Aroclor-1254	1	ug/l	0.053	ND
Aroclor-1260	1	ug/l	0.053	ND
Aroclor-1262	1	ug/l	0.053	ND
Aroclor-1268	1	ug/l	0.053	ND

Surrogate	Conc.	Spike	Low Limit	High Limit	Recovery	Flags
TCMX-Surrogate	43.49	100	30	150	43	
TCMX-Surrogate	31.81	100	30	150	32	
DCB-Surrogate	66.19	100	30	150	66	
DCB-Surrogate	51.69	100	30	150	52	

NOTE: Soil Results are reported to Dry Weight

HA2-177

Sample ID: OW-7 | **Collection Date: 12/3/2015**
Lab#: AC88558-010 | **Receipt Date: 12/3/2015**
Matrix: Aqueous

pH (SM4500-H+ B-00)

Analyte	DF	Units	RL	Result
pH	1	ph		7.8

Semivolatile Organics (no search) 625

Analyte	DF	Units	RL	Result
Naphthalene	1	ug/l	0.53	ND
Phenol	1	ug/l	2.1	ND

Surrogate	Conc.	Spike	Low Limit	High Limit	Recovery	Flags
Terphenyl-d14	47.46	50	30	130	95	
Phenol-d5	21.02	100	15	110	21	
Nitrobenzene-d5	43.12	50	30	130	86	
2-Fluorophenol	33.85	100	15	110	34	
2-Fluorobiphenyl	42.68	50	30	130	85	
2,4,6-Tribromophenol	95.86	100	15	110	96	

SGT-HEM (Non-Polar Material) 1664B

Analyte	DF	Units	RL	Result
SGT-HEM (Non-Polar Material)	1	mg/l	6.4	ND

Total Solids (SM2540B-97)

Analyte	DF	Units	RL	Result
Total Solids @ 103-105 C	**1**	**mg/l**	**40**	**1200**

Total Suspended Solids (SM2540D-97)

Analyte	DF	Units	RL	Result
Total Suspended Solids @ 103-105 C	**1**	**mg/l**	**4**	**12**

Volatile Organics (no search) 624

Analyte	DF	Units	RL	Result
1,1,1-Trichloroethane	1	ug/l	1.0	ND
1,2,4-Trichlorobenzene	1	ug/l	1.0	ND
1,4-Dichlorobenzene	1	ug/l	1.0	ND
Benzene	1	ug/l	0.50	ND
Carbon tetrachloride	1	ug/l	1.0	ND
Chloroform	1	ug/l	1.0	ND
Ethylbenzene	1	ug/l	1.0	ND
m&p-Xylenes	1	ug/l	1.0	ND
Methyl-t-butyl ether	1	ug/l	0.50	ND
o-Xylene	1	ug/l	1.0	ND
Tetrachloroethene	**1**	**ug/l**	**1.0**	**10**
Toluene	1	ug/l	1.0	ND
Xylenes (Total)	1	ug/l	1.0	ND

Surrogate	Conc.	Spike	Low Limit	High Limit	Recovery	Flags
Toluene-d8	28.90	30	70	130	96	
Dibromofluoromethane	34.05	30	70	130	114	
Bromofluorobenzene	28.66	30	70	130	96	
1,2-Dichloroethane-d4	32.12	30	70	130	107	

Sample ID: OW-28
Lab#: AC88558-011
Matrix: Aqueous

Collection Date: 12/3/2015
Receipt Date: 12/3/2015

Carbonaceous BOD-5 Day (SM5210 B-01)

Analyte	DF	Units	RL	Result
Carbonaceous Bod, 5 Day	1	mg/l	2.0	ND

Chloride (Water) 300.0

Analyte	DF	Units	RL	Result
Chloride	**10**	**mg/l**	**20**	**360**

Cr (Hexavalent) 3500-Cr B

Analyte	DF	Units	RL	Result
Cr (Hexavalent)	1	mg/l	0.025	ND

Flash Point 1010

Analyte	DF	Units	RL	Result
Flash Point	**1**	**deg. f**		**>141**

Mercury (Water) 245.1

Analyte	DF	Units	RL	Result
Mercury	1	ug/l	0.20	ND

Metals-Three 200.7

Analyte	DF	Units	RL	Result
Copper	1	ug/l	25	ND
Nickel	1	ug/l	10	ND
Zinc	1	ug/l	25	ND

Metals-Two 200.8

Analyte	DF	Units	RL	Result
Cadmium	1	ug/l	1.0	ND
Lead	**1**	**ug/l**	**3.0**	**3.5**

Nitrate-N (Water) 300.0

Analyte	DF	Units	RL	Result
Nitrate	**2**	**mg/l**	**2.0**	**24**

Nitrite-N (Aqueous) 300.0

Analyte	DF	Units	RL	Result
Nitrite	1	mg/l	1.0	ND

PCB 608

Analyte	DF	Units	RL	Result
Aroclor (Total)	1	ug/l	0.052	ND
Aroclor-1016	1	ug/l	0.052	ND
Aroclor-1221	1	ug/l	0.052	ND
Aroclor-1232	1	ug/l	0.052	ND
Aroclor-1242	1	ug/l	0.052	ND
Aroclor-1248	1	ug/l	0.052	ND
Aroclor-1254	1	ug/l	0.052	ND
Aroclor-1260	1	ug/l	0.052	ND
Aroclor-1262	1	ug/l	0.052	ND
Aroclor-1268	1	ug/l	0.052	ND

Surrogate	Conc.	Spike	Low Limit	High Limit	Recovery	Flags
TCMX-Surrogate	52.06	100	30	150	52	
TCMX-Surrogate	35.35	100	30	150	35	
DCB-Surrogate	49.89	100	30	150	50	
DCB-Surrogate	38.87	100	30	150	39	

pH (SM4500-H+ B-00)

Analyte	DF	Units	RL	Result
pH	**1**	**ph**		**7.5**

Semivolatile Organics (no search) 625

Analyte	DF	Units	RL	Result
Naphthalene	1	ug/l	0.53	ND

Sample ID: OW-28
Lab#: AC88558-011
Matrix: Aqueous

Collection Date: 12/3/2015
Receipt Date: 12/3/2015

Phenol	1	ug/l	2.1		ND	

Surrogate	Conc.	Spike	Low Limit	High Limit	Recovery	Flags
Terphenyl-d14	47.20	50	30	130	94	
Phenol-d5	24.07	100	15	110	24	
Nitrobenzene-d5	43.15	50	30	130	86	
2-Fluorophenol	37.78	100	15	110	38	
2-Fluorobiphenyl	42.22	50	30	130	84	
2,4,6-Tribromophenol	95.50	100	15	110	95	

SGT-HEM (Non-Polar Material) 1664B

Analyte	DF	Units	RL	Result
SGT-HEM (Non-Polar Material)	1	mg/l	6.3	ND

Total Solids (SM2540B-97)

Analyte	DF	Units	RL	Result
Total Solids @ 103-105 C	**1**	**mg/l**	**40**	**2200**

Total Suspended Solids (SM2540D-97)

Analyte	DF	Units	RL	Result
Total Suspended Solids @ 103-105 C	**1**	**mg/l**	**20**	**1400**

Volatile Organics (no search) 624

Analyte	DF	Units	RL	Result
1,1,1-Trichloroethane	1	ug/l	1.0	ND
1,2,4-Trichlorobenzene	1	ug/l	1.0	ND
1,4-Dichlorobenzene	1	ug/l	1.0	ND
Benzene	1	ug/l	0.50	ND
Carbon tetrachloride	1	ug/l	1.0	ND
Chloroform	**1**	**ug/l**	**1.0**	**3.6**
Ethylbenzene	1	ug/l	1.0	ND
m&p-Xylenes	1	ug/l	1.0	ND
Methyl-t-butyl ether	1	ug/l	0.50	ND
o-Xylene	1	ug/l	1.0	ND
Tetrachloroethene	1	ug/l	1.0	ND
Toluene	1	ug/l	1.0	ND
Xylenes (Total)	1	ug/l	1.0	ND

Surrogate	Conc.	Spike	Low Limit	High Limit	Recovery	Flags
Toluene-d8	29.63	30	70	130	99	
Dibromofluoromethane	30.76	30	70	130	103	
Bromofluorobenzene	27.02	30	70	130	90	
1,2-Dichloroethane-d4	32.61	30	70	130	109	

Pace Analytical
575 Broad Hollow Road , Melville, NY 11747
TEL: (631) 694-3040 FAX: (631) 420-8436
NYSDOH ID#10478 www.pacelabs.com

LABORATORY RESULTS

Results are only for the samples and analytes requested.

The lab is not directly responsible for the integrity of the sample before receipt at the lab and is responsible only for the tests requested.

Hampton Clark Veritech
175 US Route 46 West
Fairfield, NJ 07004
Attn To : Natasha Davis
Collected : 12/3/2015 2:15:00 PM
Received : 12/7/2015 1:57:00 PM OW-7
Collected By Client

Lab No. : 1512638-001
Client Sample ID: AC88558-010

Sample Information:
Type : Aqueous
Origin:

Analytical Method: E351.2 : Prep Method: E351.2 Prep Date: 12/10/2015 8:00:29 AM Analyst: SO

Parameter(s)	Results	Qualifier	D.F.	Units	Analyzed:	Container:
Nitrogen, Kjeldahl, Total	< 0.10		1	mg/L	12/10/2015 4:15 PM	Container-01 of 01

Qualifiers: E = Value above quantitation range, Value estimated.
B = Found in Blank
D.F. = Dilution Factor D = Results for Dilution
H = Received/analyzed outside of analytical holding time
+ = NYSDOH ELAP does not offer certification for this analyte / matrix / method
c = Calibration acceptability criteria exceeded for this analyte
r = Reporting limit below calibration range. Value estimated.
J = Estimated value - below calibration range
S = Recovery outside of control limits for this analyte
N = Indicates presumptive evidence of compound

Project Manager : Jon Weissberg

Test results meet the requirements of NELAC unless otherwise noted.

Date Reported : 12/10/2015

HAZ - 181

Hampton-Clarke, Inc. (WBE/DBE/SBE)
175 Route 46 West and 2 Madison Road, Fairfield, New Jersey 07004
Ph: 800-426-8992 | 973-244-9770 Fax: 973-244-9787 | 973-439-1458
Service Center: 137-D Gaither Drive, Mount Laurel, New Jersey 08054
Ph (Service Center): 856-780-6057 Fax: 856-780-6056
NELAC/NJ #07071 | PA #68-00463 | NY #11408 | CT #PH-0671 | KY #90124 | DE HSCA Approved

Hampton-Clarke
A Women-Owned, Disadvantaged, Small Business Enterprise

CHAIN OF CUSTODY RECORD

Project # (Lab Use Only): 5120328

Page 2 of 2

3) Reporting Requirements (Please Circle)

Turnaround	Report Type	Electronic Deliv.
When Available:	Data Summary	Hazsite/CSV
1 Business Day (100%)*	Results + QC (Waste)	EnviroData
2 Business Days (75%)*	NJ Reduced	Excel - NJ Regulatory
3 Business Days (50%)*	NY Reduced	Excel - NY Regulatory
4 Business Days (35%)*	PA Reduced	Excel - PA Regulatory
5 Business Days (25%)	Full / Category B	EQuIS (specify below):
10 Business Days (Stand.)	Category A	4-File/EZ/NYS/Reg. 2 or 5
Other:	Electronic (PDF)	Other:

* Expedited TAT Not Always Available. Please Check with Lab.

Customer Information

1a) Customer: LOUIS BERGER
Address: 48 WALL ST. NEW YORK, NY 10005
1b) Email/Cell/Fax/Ph:
1c) Send Invoice to: BRENNA GRIBBLE
1d) Send Report to: — " —

Project Information

2a) Project: ASTORIA TRUNK PH II
2b) Project Mgr: FAMEEDA ALI
2c) Project Location (City/State): QUEENS, NY
2d) Quote/PO # (If Applicable):

FOR LAB USE ONLY ↓

Batch # A0885585

Matrix Codes: DW - Drinking Water; GW - Ground Water; WW - Waste Water; S - Soil; SL - Sludge; OL - Oil; A - Air; OT - Other (please specify under Item 9, Comments)

7) Analysis (specify methods & parameter lists) ==> Check if Contingent ==>

<== Check if Contingent <==

Lab Sample #	4) Customer Sample ID	5) Matrix	6) Sample Date	6) Sample Time	Composite (C)	Grab (G)	NYCDEP Effluent Parameters;	(HEM-NPM, pH, flashpoint)	Metals, VOC,	TSS, TDS, Hex Cr,	BNA, PCB,	CBOD, NO2,	TKN				8) # of Bottles: None	MeOH	En Core	NaOH	HCl	H2SO4	HNO3	Other:	9) Comments
-010	OW-7	GW	12/3/15	1415		X	X	X	X	X	X	X	X	X			9				5	1	1		
-011	OW-28	GW	12/3/15	1248		X	X	X	X	X	X	X	X	X			9				5	1	1		

RS 12/3/15

HA2-182

10) Relinquished by: [signature]
Accepted by: [signature]

Date	Time
12/3/15	1559
12/3/15	1734

Additional Notes

Comments, Notes, Special Requirements, HAZARDS

Indicate if low-level methods required to meet current groundwater standards (SPLP for soil):
- [ ] BN or BNA (8270D SIM)
- [ ] VOC (8260C SIM or 8011)
- [ ] SPLP (BN, BNA, Metals)

Check if applicable:
- [ ] Project-Specific Reporting Limits
- [ ] High Contaminant Concentrations
- [ ] NJ LSRP Project (also check boxes above/right)

For NNJ LSRP projects, indicate which standards need to be met:
- [ ] NJDEP GWQS
- [ ] NJDEP SRS
- [ ] NJDEP SPLP
- [ ] Other (specify):

Cooler Temperature

11) Sampler (print name): O. SONGIL, N. DIEHL Date: 12/2/15

Please note NUMBERED items. If not completed your analytical work may be delayed. A fee of $5/sample will be assessed for storage should sample not be activated for analysis.

Pace Analytical
575 Broad Hollow Road , Melville, NY 11747
TEL: (631) 694-3040 FAX: (631) 420-8436
NYSDOH ID#10478 www.pacelabs.com

LABORATORY RESULTS

Results are only for the samples and analytes requested.

The lab is not directly responsible for the integrity of the sample before receipt at the lab and is responsible only for the tests requested.

Hampton Clark Veritech
175 US Route 46 West
Fairfield, NJ 07004
Attn To : Natasha Davis

Collected : 12/3/2015 12:48:00 PM
Received : 12/7/2015 1:57:00 PM OW-28
Collected By Client

Lab No. : 1512638-002
Client Sample ID: AC88558-011

Sample Information:
Type : Aqueous

Origin:

Analytical Method: E351.2 : Prep Method: E351.2 Prep Date: 12/10/2015 8:00:29 AM Analyst: SO

Parameter(s)	Results	Qualifier	D.F.	Units	Analyzed:	Container:
Nitrogen, Kjeldahl, Total	< 0.10		1	mg/L	12/10/2015 4:16 PM	Container-01 of 01

Qualifiers: E = Value above quantitation range, Value estimated.
B = Found in Blank
D.F. = Dilution Factor D = Results for Dilution
H = Received/analyzed outside of analytical holding time
+ = NYSDOH ELAP does not offer certification for this analyte / matrix / method
c = Calibration acceptability criteria exceeded for this analyte
r = Reporting limit below calibration range. Value estimated.
J = Estimated value - below calibration range
S = Recovery outside of control limits for this analyte
N = Indicates presumptive evidence of compound

Project Manager : Jon Weissberg

Test results meet the requirements of NELAC unless otherwise noted.

Date Reported : 12/10/2015

HAZ-183

PACE ANALYTICAL
575 Broad Hollow Road
Melville, NY 11747
TEL: (631) 694-3040 FAX: (631) 420-8436
Website: www.pacelabs.com

Sample Receipt Checklist

Client Name **HCV**

Date and Time Received: **12/7/2015 1:57:00 PM**

Work Order Number: **1512638** RcptNo: **1**

Received by **George Cappadona**

Completed by: John Statt

Reviewed by: Jim White

Completed Date: 12/8/2015 2:10:46 PM

Reviewed Date: 12/10/2015 10:51:28 AM

Carrier name: Client

Chain of custody present?	Yes ☑	No ☐		
Chain of custody signed when relinquished and received?	Yes ☑	No ☐		
Chain of custody agrees with sample labels?	Yes ☑	No ☐		
Are matrices correctly identified on Chain of custody?	Yes ☑	No ☐		
Is it clear what analyses were requested?	Yes ☑	No ☐		
Custody seals intact on sample bottles?	Yes ☐	No ☐	Not Present	☑
Samples in proper container/bottle?	Yes ☑	No ☐		
Were correct preservatives used and noted?	Yes ☑	No ☐	NA	☐
Preservative added to bottles:				
Sample Condition?	Intact ☑	Broken ☐	Leaking	☐
Sufficient sample volume for indicated test?	Yes ☑	No ☐		
Were container labels complete (ID, Pres, Date)?	Yes ☑	No ☐		
All samples received within holding time?	Yes ☑	No ☐		
Was an attempt made to cool the samples?	Yes ☑	No ☐	NA	☐
All samples received at a temp. of > 0° C to 6.0° C?	Yes ☑	No ☐	NA	☐
Response when temperature is outside of range:				
Sample Temp. taken and recorded upon receipt?	Yes ☑	No ☐	To	3.8 °
Water - Were bubbles absent in VOC vials?	Yes ☐	No ☐	No Vials	☑
Water - Was there Chlorine Present?	Yes ☐	No ☐	NA	☑
Water - pH acceptable upon receipt?	Yes ☑	No ☐	No Water	☐
Are Samples considered acceptable?	Yes ☑	No ☐		
Custody Seals present?	Yes ☐	No ☑		
Airbill or Sticker?	Air Bil ☐	Sticker ☐	Not Present	☑
Airbill No:				

Case Number: SDG: HCV080 SAS:

Any No response should be detailed in the comments section below, if applicable.

Client Contacted? ☐ Yes ☐ No ☑ NA Person Contacted:

Contact Mode: ☐ Phone: ☐ Fax: ☐ Email: ☐ In Person:

Client Instructions:

Date Contacted: Contacted By:

Regarding:

Comments:

CorrectiveAction:

HA2-184

Pace Analytical
575 Broad Hollow Road , Melville, NY 11747
TEL: (631) 694-3040 FAX: (631) 420-8436
NYSDOH ID#10478 www.pacelabs.com

WorkOrder :
1512638

Certifications

STATE	CERTIFICATION #
NEW YORK	10478
NEW JERSEY	NY158
CONNECTICUT	PH-0435
MARYLAND	208
MASSACHUSETTS	M-NY026
NEW HAMPSHIRE	2987
RHODE ISLAND	LAO00340
PENNSYLVANIA	68-00350

HAZ – 185

CHAIN OF CUSTODY RECORD

Hampton-Clarke, Inc.
175 US Hwy 46 West
Fairfield, New Jersey, 07004
Ph:800-426-9992 Fax:973-439-1458

HCV080

Report To:
Hampton-Clarke, Inc.:
Attn:Reporting
175 Route 46 West
Fairfield, New Jersey 07004

Invoice To:
Hampton-Clarke, Inc.:
Attn:Accounting
175 Route 46 West
Fairfield, New Jersey 07004

Project #: 5120328

CocID#: 4949

FINAL RESULTS TO: aruccatano@hcvlab.com;pm@hcvlab.com
PRELIM/VERBAL RESULTS TO: aruccatano@hcvlab.com;pm@hcvlab.com

EDD: NEW JERSEY HAZRESULT OR EQUIS EZEDD REQUIRED FOR ALL DATA SUBMITTALS!

Turn Around Time: 1-week BOS-10 **Preliminary Due Date:** 12/14/2015
Report Type: NYDOH-CatA (STAND **Hard Copy Due Date:** 12/14/2015

HAZ-186

Sample Number:	Client ID	Matrix:	Date Collected:	Time Collected:	Analysis Requested
AC88558-010	OW-7	Aqueous	12/3/2015	2:15:00 PM	TKN 351.2
AC88558-011	OW-28	Aqueous	12/3/2015	12:48:00 PM	TKN 351.2

1512638

MP 12/4/15

Relinquished By:	Accepted By:	Date:	Time:	Comments, Notes, Special Requirements, HAZARDS
George A. Cappadona	George A. Cappadona	12/7/15	1357	
		12/7/15	13:57	

Cooler Temp: 3.8

HC Lab Use Only: Subcontracted Lab Id and Contact: Chauntel Greaves, (631) 694-3040, LabID: DW, 575 Broad Hollow Rd, , Melville, NY, 11747-5076

Hampton-Clarke, Inc. (WBE/DBE/SBE)
175 Route 46 West and 2 Madison Road, Fairfield, New Jersey 07004
Ph: 800-426-0592 | 973-244-9770 Fax: 973-244-9787 | 973-439-1458
Service Center: 137-D Gaither Drive, Mount Laurel, New Jersey 08054
Ph (Service Center): 856-780-6057 Fax: 856-780-6056
NELAC/NJ #07071 | PA #68-00463 | NY #11408 | CT #PH-0671 | KY #90124 | DE HSCA Approved

Hampton-Clarke
A Women-Owned, Disadvantaged, Small Business Enterprise

CHAIN OF CUSTODY RECORD

Project # (Lab Use Only): 5120328

Page 2 of 2

3) Reporting Requirements (Please Circle)

Turnaround	Report Type	Electronic Deliv.
When Available:	Data Summary	Hazsite/CSV
1 Business Day (100%)*	Results + QC (Waste)	EnviroData
2 Business Days (75%)*	NJ Reduced	Excel - NJ Regulatory
3 Business Days (50%)*	NY Reduced	Excel - NY Regulatory
4 Business Days (35%)*	PA Reduced	Excel - PA Regulatory
5 Business Days (25%)	Full / Category B	EQuIS (specify below):
10 Business Days (Stand.)	Category A	4-File/EZ/NYS/Reg. 2 or 5
Other:	Electronic (PDF)	Other:

* Expedited TAT Not Always Available. Please Check with Lab.

Customer Information

1a) Customer: LOUIS BERGER
Address: 48 WALL ST. NEW YORK, NY 10005
1b) Email/Cell/Fax/Ph:
1c) Send Invoice to: BRENNA GRIBBLE
1d) Send Report to: —"—

Project Information

2a) Project: ASTORIA TRUNK PH II
2b) Project Mgr: FAHEEM ALI
2c) Project Location (City/State): QUEENS, NY
2d) Quote/PO # (If Applicable):

FOR LAB USE ONLY ↓

Batch # 1608558

⟹ Check If Contingent ⟹

Matrix Codes
DW - Drinking Water; S - Soil; A - Air; GW - Ground Water; SL - Sludge; WW - Waste Water; OL - Oil; OT - Other (please specify under Item 9, Comments)

7) Analysis (specify methods & parameter lists)

⟸ Check If Contingent ⟸

8) # of Bottles

Lab Sample #	4) Customer Sample ID	5) Matrix	6) Sample Date	6) Sample Time	Composite (C)	Grab (G)	NYCDEP Effluent Parameters:	(HEM-NPH, pH, flashpoint)	Metals, VOC	TSS, TS, Hex Cr	BNA, PCB	CBOD, NO2,	TKN	None	MeOH	En Core	NaOH	HCl	H2SO4	HNO3	Other:	9) Comments
-010	OW-7	GW	12/3/15	1415		X	X	X	X	X	X	X	X	X				5	1	1		
-011	OW-28	GW	12/3/15	1248		X	X	X	X	X	X	X	X	X				5	1	1		
																	NS 12/3/15					

HAZ-187

10) Relinquished by / Accepted by

Relinquished by:	Accepted by:	Date	Time
[signature]	[signature]	12/3/15	1559
[signature]	[signature]	12/3/15	1734

Additional Notes

Comments, Notes, Special Requirements, HAZARDS

Indicate if low-level methods required to meet current groundwater standards (SPLP for soil):
- [ ] BN or BNA (8270D SIM)
- [ ] VOC (8260C SIM or 8011)
- [ ] SPLP (BN, BNA, Metals)

Check if applicable:
- [ ] Project-Specific Reporting Limits
- [ ] High Contaminant Concentrations
- [ ] NJ LSRP Project (also check boxes above/right)

For NJ LSRP projects, indicate which standards need to be met:
- [ ] NJDEP GWQS
- [ ] NJDEP SRS
- [ ] NJDEP SPLP
- [ ] Other (specify):

Cooler Temperature

11) Sampler (print name): O. SOWELL, N. DIEHL Date: 12/2/15

Please note NUMBERED items. If not completed your analytical work may be delayed.
A fee of $5/sample will be assessed for storage should sample not be activated for any analysis.

END OF THIS SECTION

This section consists of hundred and eighty eight (188) pages

CITY OF NEW YORK
DEPARTMENT OF DESIGN AND CONSTRUCTION
DIVISION OF INFRASTRUCTURE

ADDENDA CONTROL SHEET

BID OPENING DATE: MAY 3, 2016

PROJECT NO.: QED1014

TITLE: REHABILITATION OF EXISTING TRUNK WATER MAINS IN CRESCENT STREET, ETC

ADDENDA ISSUED	No. OF DRAWINGS	DATE
#1: Additional Amendments		04/11/2016

ATTACH TO CONTRACT DOCUMENTS

THE CITY OF NEW YORK
DEPARTMENT OF DESIGN AND CONSTRUCTION
INFRASTRUCTURE DIVISION
BUREAU OF DESIGN

PROJECT ID: QED1014

REHABILITATION OF EXISTING TRUNK WATER MAINS IN CRESCENT STREET FROM 34TH AVENUE TO 31ST AVENUE; 31ST AVENUE FROM CRESCENT STREET TO 41ST STREET; AND 41ST STREET FROM 31ST AVENUE TO 25TH AVENUE

INCLUDING DISTRIBUTION WATER MAIN, SEWER AND TRAFFIC SIGNAL WORK

Together With All Work Incidental Thereto

BOROUGH OF QUEENS

ADDENDUM NO. 1

DATED: April 11, 2016

This Addendum is issued for the purpose of amending the requirements of the contract documents and is hereby made part of said contract documents to the same extent as if it was originally included therein.

(1) **Refer** to the Bid and Contract Documents, VOLUME 1 OF 3, Page A-1, Attachment 1 - Bid Information;
Change the dates shown for Submission of Bids To: and for Bid Opening: from "April 15, 2016" to read "May 3, 2016."

(2) **Refer** to the Bid and Contract Documents, VOLUME 1 OF 3, Page 13, Schedule B - MWBE;
Change the dates shown for Bid/Proposal Response Date: from "April 15" to read "May 3, 2016."

(3) **Refer** to the Bid and Contract Documents, VOLUME 1 OF 3, Page 20, APPRENTICE PROGRAM QUESTIONNAIRE;
Change the Project ID from "SER200245" to read "QED1014".

By signing in the space provided below, the bidder acknowledges receipt of the one (1) page of this Addendum.

THIS ADDENDUM MUST BE SIGNED BY ALL BIDDERS AND ATTACHED TO THEIR BIDS.

G. Saini

GURDIP SAINI, P.E.
Associate Commissioner/Design I

_____
Name of Bidder

By:_____

ATTACH TO CONTRACT DOCUMENTS

THE CITY OF NEW YORK
DEPARTMENT OF DESIGN AND CONSTRUCTION
INFRASTRUCTURE DIVISION
BUREAU OF DESIGN

PROJECT ID: QED1014

REHABILITATION OF EXISTING TRUNK WATER MAINS IN CRESCENT STREET FROM 34TH AVENUE TO 31ST AVENUE; 31ST AVENUE FROM CRESCENT STREET TO 41ST STREET; AND 41ST STREET FROM 31ST AVENUE TO 25TH AVENUE

INCLUDING DISTRIBUTION WATER MAIN, SEWER AND TRAFFIC SIGNAL WORK

Together With All Work Incidental Thereto

BOROUGH OF QUEENS

ADDENDUM NO. 1

DATED: April 11, 2016

This Addendum is issued for the purpose of amending the requirements of the contract documents and is hereby made part of said contract documents to the same extent as if it was originally included therein.

---

(1) **Refer** to the Bid and Contract Documents, VOLUME 1 OF 3, Page A-1, Attachment 1 - Bid Information;
Change the dates shown for Submission of Bids To: and for Bid Opening: from "April 15, 2016" to read "May 3, 2016."

(2) **Refer** to the Bid and Contract Documents, VOLUME 1 OF 3, Page 13, Schedule B - MWBE;
Change the dates shown for Bid/Proposal Response Date: from "April 15" to read "May 3, 2016."

(3) **Refer** to the Bid and Contract Documents, VOLUME 1 OF 3, Page 20, APPRENTICE PROGRAM QUESTIONNAIRE;
Change the Project ID from "SER200245" to read "QED1014".

By signing in the space provided below, the bidder acknowledges receipt of the one (1) page of this Addendum.

THIS ADDENDUM MUST BE SIGNED BY ALL BIDDERS AND ATTACHED TO THEIR BIDS.

G. Saini

GURDIP SAINI, P.E.
Associate Commissioner/Design I

K.T. 4/11/16

_____
Name of Bidder

By:_____

CITY OF NEW YORK
DEPARTMENT OF DESIGN AND CONSTRUCTION
DIVISION OF INFRASTRUCTURE

ADDENDA CONTROL SHEET

BID OPENING DATE: MAY 17, 2016

PROJECT NO.: QED1014

TITLE: REHABILITATION OF EXISTING TRUNK WATER MAINS IN CRESCENT STREET, ETC

ADDENDA ISSUED	No. OF DRAWINGS	DATE
#1: Additional Amendments		04/11/2016
#2: Additional Amendments		04/28/2016

ATTACH TO CONTRACT DOCUMENTS

THE CITY OF NEW YORK
DEPARTMENT OF DESIGN AND CONSTRUCTION
INFRASTRUCTURE DIVISION
BUREAU OF DESIGN

PROJECT ID: QED1014

REHABILITATION OF EXISTING TRUNK WATER MAINS IN CRESCENT STREET FROM 34TH AVENUE TO 31ST AVENUE; 31ST AVENUE FROM CRESCENT STREET TO 41ST STREET; AND 41ST STREET FROM 31ST AVENUE TO 25TH AVENUE

INCLUDING DISTRIBUTION WATER MAIN, SEWER AND TRAFFIC SIGNAL WORK

Together With All Work Incidental Thereto

BOROUGH OF QUEENS

ADDENDUM NO. 2

DATED: April 28, 2016

This Addendum is issued for the purpose of amending the requirements of the contract documents and is hereby made part of said contract documents to the same extent as if it was originally included therein.

(1) **Refer** to the Bid and Contract Documents, VOLUME 1 OF 3, Page A-1, Attachment 1 - Bid Information;
Change the dates shown for Submission of Bids To: and for Bid Opening: from "May 3, 2016" to read "May 17, 2016."

(2) **Refer** to the Bid and Contract Documents, VOLUME 1 OF 3, Page 13, Schedule B - MWBE;
Change the dates shown for Bid/Proposal Response Date: from "May 3, 2016" to read "May 17, 2016."

By signing in the space provided below, the bidder acknowledges receipt of the one (1) page of this Addendum.

THIS ADDENDUM MUST BE SIGNED BY ALL BIDDERS AND ATTACHED TO THEIR BIDS.

P. Dhawu
for **GURDIP SAINI, P.E.**
Associate Commissioner/Design I

_____
Name of Bidder

By:_____

ATTACH TO CONTRACT DOCUMENTS

THE CITY OF NEW YORK
DEPARTMENT OF DESIGN AND CONSTRUCTION
INFRASTRUCTURE DIVISION
BUREAU OF DESIGN

PROJECT ID: QED1014

REHABILITATION OF EXISTING TRUNK WATER MAINS IN CRESCENT STREET FROM 34TH AVENUE TO 31ST AVENUE; 31ST AVENUE FROM CRESCENT STREET TO 41ST STREET; AND 41ST STREET FROM 31ST AVENUE TO 25TH AVENUE

INCLUDING DISTRIBUTION WATER MAIN, SEWER AND TRAFFIC SIGNAL WORK

Together With All Work Incidental Thereto

BOROUGH OF QUEENS

ADDENDUM NO. 2

DATED: April 28, 2016

This Addendum is issued for the purpose of amending the requirements of the contract documents and is hereby made part of said contract documents to the same extent as if it was originally included therein.

(1) **Refer** to the Bid and Contract Documents, VOLUME 1 OF 3, Page A-1, Attachment 1 - Bid Information;
Change the dates shown for Submission of Bids To: and for Bid Opening: from "May 3, 2016" to read "May 17, 2016."

(2) **Refer** to the Bid and Contract Documents, VOLUME 1 OF 3, Page 13, Schedule B - MWBE;
Change the dates shown for Bid/Proposal Response Date: from "May 3, 2016" to read "May 17, 2016."

By signing in the space provided below, the bidder acknowledges receipt of the one (1) page of this Addendum.

THIS ADDENDUM MUST BE SIGNED BY ALL BIDDERS AND ATTACHED TO THEIR BIDS.

P. Dhaun
for **GURDIP SAINI, P.E.**
Associate Commissioner/Design I

4/28/16

Name of Bidder

By:

CITY OF NEW YORK
DEPARTMENT OF DESIGN AND CONSTRUCTION
DIVISION OF INFRASTRUCTURE

ADDENDA CONTROL SHEET

BID OPENING DATE: JUNE 2, 2016

PROJECT NO.: QED1014

TITLE: REHABILITATION OF EXISTING TRUNK WATER MAINS IN CRESCENT STREET, ETC

ADDENDA ISSUED	No. OF DRAWINGS	DATE
#1: Additional Amendments		04/11/2016
#2: Additional Amendments		04/28/2016
#3: Additional Amendments	18	05/10/2016

ATTACH TO CONTRACT DOCUMENTS

THE CITY OF NEW YORK
DEPARTMENT OF DESIGN AND CONSTRUCTION
INFRASTRUCTURE DIVISION
BUREAU OF DESIGN

PROJECT ID: QED1014

REHABILITATION OF EXISTING TRUNK WATER MAINS IN CRESCENT STREET FROM 34TH AVENUE TO 31ST AVENUE; 31ST AVENUE FROM CRESCENT STREET TO 41ST STREET; AND 41ST STREET FROM 31ST AVENUE TO 25TH AVENUE

INCLUDING DISTRIBUTION WATER MAIN, SEWER AND TRAFFIC SIGNAL WORK

Together With All Work Incidental Thereto

BOROUGH OF QUEENS

ADDENDUM NO. 3

DATED: May 10, 2016

This Addendum is issued for the purpose of amending the requirements of the contract documents and is hereby made part of said contract documents to the same extent as if it was originally included therein.

(1) **Refer** to the Bid and Contract Documents, VOLUME 1 OF 3, Page A-1, Attachment 1 - Bid Information;
Change the dates shown for Submission of Bids To: and for Bid Opening: from "May 17, 2016" to read "June 2, 2016."

(2) **Refer** to the Bid and Contract Documents, VOLUME 1 OF 3, Page B-1, NOTICE TO BIDDERS;
Add the following note:

"Items listed as "67.11" in this Bid Schedule shall comply with the requirements of Addendum No. 4 dated May 10, 2016."

(3) **Refer** to the Bid and Contract Documents, VOLUME 1 OF 3, BID SCHEDULE, pages B-3 to B-40;
Delete all pages in their entirety;
Substitute attached revised pages B-3 (REVISION #1) to B-41 (REVISION #1).

(4) **Refer** to the Bid and Contract Documents, VOLUME 1 OF 3, Page 13, Schedule B - MWBE;
Delete Page 13 in its entirety;
Substitute with attached revised Page 13-R.

(5) **Refer** to the Bid and Contract Documents, VOLUME 3 OF 3, SEWER AND WATER MAIN REVISIONS TO SPECIFICATIONS, NOTICE TO BIDDERS, page SW-2;
Add the following notes:

"(14) **INTENT AND HISTORY OF PROJECT:**

It is the intent of this project to rehabilitate the existing 60 inch steel trunk water main in Crescent Street from 31st Avenue to 34th Avenue; 31st Avenue from Crescent Street to 41st Street; and 41st Street from 31st Avenue to 25th Avenue, which was installed in 1988, and has not been in service due to substandard manufacturing of the existing steel pipe.

The 60 inch pipe is to be rehabilitated with new 52 inch steel water main (outside diameter 52 inches) by slip lining method and replaced with new steel pipe per open trench method within the limits as shown on the contract drawings and as ordered by the Engineer. Insertion/ receiving pits shall be utilized in areas where bends cannot be negotiated by sliplining and at connections to Butterfly Valve Chambers. The proposed open cut areas are shown on the contract drawings.

The slip lining method was selected to minimize disturbances and disruptions to the community. Open cut will be used only where necessary. The contractor is encouraged to minimize trenches wherever possible.

The existing trunk mains within the project limits are 72 inches, 60 inches and 48 inches in diameter as noted on the Contract Drawings. There also exists four (4) 48 inch Butterfly Valve and Chambers within the project limits. Two of these valve chambers have a single 48 inch valve and two valve chambers have two 48 inch valves. Their locations are noted on the contract drawings and details of the existing valve installations are included in the Contract Drawings as "Reference Only" sheets BFV1 thru BFV4 attached to Addendum No. 3 dated May 10, 2016. The existing chambers shall remain but the existing valves shall be removed and transported to NYC DEP 3rd Ward Pipe Yard. The existing 6 inch bypass valves removed from the existing Butterfly Valve Chambers shall also be transported to the 3rd Ward Pipe Yard. The valve coatings should be tested for asbestos and, if found, be removed prior to delivery to the yard.

New 48 inch Butterfly Valves with 6 inch bypass valves and the arrangement shall be installed without damaging the existing chambers. New link seals shall be installed and waterproofing will be applied to the exposed sections of the existing chambers as per "NYC DEP Standard Sewer and Water Main Specifications", Section 25.05 "Waterproofing" and as ordered by the Engineer."

(6) **Refer** to the Bid and Contract Documents, VOLUME 3 OF 3, SEWER AND WATER MAIN REVISIONS TO SPECIFICATIONS, Sub-Section 60.61.4 – MATERIALS, Paragraph (A)(2), page SW-11;
Change the text "**For reference of Typical Pipe Push Stops for Liner Pipe see attachment "A" attached to the end of this Addendum**" to read "**For reference of Typical Pipe Push Stops for Liner Pipe see attachment "A" attached to the end of Addendum No. 3 dated May 10, 2016**".

(7) **Refer** to the Contract Drawings, Sheet Nos. 2, 3, 6, 9, 10, 12, 14, and 15 of 15;
Delete these sheets in their entirety;
Substitute with attached revised Sheet Nos. 2R, 3R, 6R, 9R, 10R, 12R, 14R, and 15R of 15.

(8) **Refer** to the Contract Drawings;
Add attached Sheet Nos. BFV 1 to BFV 4, CP1 to CP2, and CPD1 to CPD4;

(9) The Contractor is notified that as part of this contract a "Cathodic Protection (CP) System Survey and Engineering Study of Soil and Stray Currents and Cathodic Protection System Design" has been prepared by the firm of CorrTech, Inc. The Contractor's attention is directed to the Cathodic Protection Design drawings consisting of six (6) sheets that are included in the contract drawings; to the Cathodic Protection (CP) System Survey and Engineering Study of Soil and Stray Currents and Cathodic Protection System Design report that consists of eighteen (18) pages that is attached to the end of this addendum; and to the Quantity and Cost Estimating report consisting of one (1) page that is attached to the end of this Addendum.

(10) Attached to the end of this Addendum, is "Attachment A", details for Typical Pipe Push Stops for Linear Pipe, consisting of one (1) page.

(11) See attached list of QUESTIONS SUBMITTED BY BIDDERS AND RESPONSES PROVIDED BY DDC for additional information.

By signing in the space provided below, the bidder acknowledges receipt of the three (3) pages of this Addendum plus sixty-seven (67) pages of attachments and eighteen (18) sheets of contract drawings.

THIS ADDENDUM MUST BE SIGNED BY ALL BIDDERS AND ATTACHED TO THEIR BIDS.

G. Saini

GURDIP SAINI, P.E.
Associate Commissioner/Design I

_____
Name of Bidder

By:_____

QUESTIONS SUBMITTED BY BIDDERS AND RESPONSES PROVIDED BY DDC

QUESTION NO. 1: The 52" pipe to be slip-lined into the existing pipe has a coating reference as AWWA C-210 (page 39 of NYC's Specifications for Trunk Main Work – March 2012). The standard that covers this is "AWWA C-222 Polyurethane Coatings for the Interior and Exterior of Steel Water Pipe and Fittings". We request a change make the AWWA C-222 the applicable standard for this project.

ANSWER NO. 1: Refer to Specifications for Trunk Main Work dated July 2014 – Division 2, Part 3 – LINING AND COATING OF STEEL PIPE AND APPURTENANCES IN THE SHOP AND IN THE FIELD.

QUESTION NO. 2: There are short sections of the 52" line that will be "direct bury". We suggest that all 52" pipe be coated with the polyurethane coating in lieu of tape wrap for these direct bury sections.

ANSWER NO. 2: All direct buried pipe shall be tape wrapped and installed in accordance with "New York City Department of Environmental Protection (NYCDEP) Specifications For Trunk Main Work. (This publication includes Special Provisions For Trunk Main Work; and, Specification For Furnishing, Delivering And Laying Steel Pipe And Appurtenances.)

QUESTION NO. 3: The drawings indicate the 52" pipe connecting to existing 48" valve vaults (sheet 9, 12 and 14). We request additional details showing where and to what item the new pipe is connecting to at these locations.

ANSWER NO. 3: Refer to attached revised Sheet Nos. 9R, 10R, 12R, 14R, and 15R of 15.

QUESTION NO. 4: Item 60.29CP – Furnishing, Installing and Testing Corrosion Control and/or Cathodic Protection System, was included in the bid item list. However, no specifications or plans were found for the cathodic protection system in any of the bid documents. Please advise.

ANSWER NO. 4: Refer to Article (9) of this Addendum.

QUESTION NO. 5: Pursuant to sheet 6 of the contract drawings under the note for removal, reinstallation and testing of existing 48" butterfly valves in existing chambers, please clarify the number and locations of said valves that have to be worked on accordingly. For example, is the existing butterfly valve located at the SEC of Crescent St. and 34th Ave. included?

ANSWER NO. 5: New valves in place of existing valves will now be included in this project. Refer to attached Sheet No. 6R of 15.

QUESTION NO. 6: Pursuant to the above note (question no. 5), what do you mean by testing the existing butterfly valve after re-installation?

ANSWER NO. 6: New valves will be installed in place of the existing valves.

QUESTION NO. 7: Pursuant to the above note (question no. 5), is it the intent to excavate and expose the outside perimeter of each existing butterfly valve chamber in order to water proof said outside perimeter? If so, what are the limits of the waterproofing?

ANSWER NO. 7: Waterproofing must be applied where the Butterfly Valve Chamber has been exposed for removal, installing and connecting pipe, as per specifications and standard drawings, and/or as ordered by the Engineer.

QUESTION NO. 8: What year was the existing steel main built? What standard drawings were followed at that time when constructing the existing steel main and building the single/double butterfly valve chambers?

ANSWER NO. 8: The existing steel main was installed in 1988. For details of the single/double butterfly valve, refer to the attached contract drawings, Sheet Nos. BFV1 to BFV4.

QUESTION NO. 9: Are there as-built drawings of the existing main, particularly the butterfly valve piping? In order to remove any existing butterfly valve, reinstall and then add an external bypass, information needs to be furnished as to the configuration of the piping inside the butterfly valve chamber, including but not limited to, flanges, pipe adaptors, couplings, expansion joints, 6" bypass and the valve itself. Who is the manufacturer of the existing butterfly valves that have to be removed and reinstalled? Are there any photos of the existing butterfly valve chambers in question? Can a field inspection be scheduled for contractors to inspect said butterfly valve chambers and their respective valves and piping?

ANSWER NO.9: Refer to attached Sheet No. BFV4 for field cards. New valves shall be installed in place of existing valves. No photographs of the existing Butterfly Valve Chambers are available. No field inspections of the existing 48 inch Butterfly Valves and Chambers is possible. Details of the existing chambers are attached to the contract drawings as part of this addendum, Sheet Nos. BFV1 thru BFV4.

QUESTION NO. 10: Please clarify how a 52" steel main can be slip lined inside existing 60" steel main with vertical bends at the following locations:

a. Int. Broadway & Crescent St.
b. Int. 31st Drive & Crescent St.
c. Sta 29+50 31st Ave.
d. Sta 23+80 41st St.
e. Sta 19+55 41st St.

ANSWER NO. 10: Per available records these locations do not have bends but may have some deflected joints. Based upon industry history there exists means and methods to line such pipe using shorter lengths of pipe. The contractor shall submit their means and methods prior to construction and take special care to ensure a proper alignment.

QUESTION NO. 11: What is the interior coating of the existing 60" steel main to be slip lined?

ANSWER NO. 11: The interior coating of the existing 60" steel main is coal tar enamel.

QUESTION NO. 12: Why is the design so tight using a 52" pipe inside of a 60" pipe? Is the inside diameter of the existing steel main less than 60" or 60"? Such sizing does not leave much room for installation let alone grouting.

ANSWER NO. 12: 52 inch steel pipe is being used to slip line the existing 60 inch steel pipe in order to have a maximum flow. The inside diameter of the existing steel pipe is 60 inches per records.

QUESTION NO. 13: Please provide the standard drawing for a double 48' butterfly valve chamber since said drawing is not included in the list of standard drawings on sheet 2 and was not included in the set of contract drawings.

ANSWER NO. 13: Refer to attached Sheet Nos. BFV1 thru BFV4 for details of the existing Double 48 inch Butterfly Valve Chamber.

QUESTION NO. 14: What diameter are the wall sleeves in the existing butterfly valve chambers? Were link seals used when the existing chambers were built?

ANSWER NO. 14: The existing Butterfly Valves are 48 inches on 48 inch steel main. The openings for the wall sleeves are appropriate for 48 inch diameter steel pipe. Link Seals were installed as per standard drawings.

QUESTION NO.15: Are the roof slabs of the existing butterfly valve chambers removable as the current standard butterfly valve chamber drawings indicate?

ANSWER NO. 15: The roof slabs are removable.

QUESTION NO. 16: When removing and reinstalling the existing butterfly valves, are the existing bolts, nuts, sleeves and washers to be reused?

ANSWER NO. 16: The contractor shall install new valves with all new accessories including, but not limited to, bolts, nuts washers, insulation kits, fasteners, etc. as per the latest standards and specifications.

QUESTION NO. 17: A few locations of existing access manholes on the existing 60" trunk main are noted to be permanently closed/plugged and sealed by an approved method. Does this note mean to replace the access manhole cover with a blind flange then abandon the manhole?

ANSWER NO. 17: The existing access manhole cover on the existing 60 inch steel trunk main shall be permanently closed/plugged and sealed. The existing 2 inch corporation stop on the existing manhole cover shall also be permanently plugged and sealed using a tapered 2 inch steel plug.

QUESTION NO.18: It appears from the list of unit items that new wall sleeves and seals are to be installed in all chambers. However, there are no construction details, specifications and/or drawings to indicate how chamber walls are to be demolished, new wall sleeve installed and said walls reconstructed where the existing chambers are to remain. Please clarify.

ANSWER NO. 18: The chamber walls are not to be demolished. It is not the intent to replace the existing wall sleeves however; new link seals shall be installed. The contractor shall modify the means and methods, and shall exercise extreme caution and take all necessary precautions as not to damage the existing chamber walls as well as the chamber wall openings.

QUESTION NO. 19: Since a double butterfly valve chamber drawing was not included in the contract drawings and is not on the list of standard drawings, please verify that the detail of the intersection of 31st Ave. and 41st. St. on sheet 15 of the contract drawings is correct in showing an additional flanged joint that the new tee is to be connected to and is not actually the flange joint on the existing butterfly valve. Typically, the steel pipe would connect to the butterfly valve with a flanged adapter pipe and thereby would require a new insulated joint and a field welded external bypass. Also please verify whether any of the valves in the noted chamber have to be removed, reinstalled and tested.

ANSWER NO. 19: The detail shown on attached Sheet No. 15R of 15 are as per the existing field card as shown on attached Sheet No. BFV4. No valves in the double 48 inch connection valve Chamber at the intersection of 31st Avenue and 41st Street shall be removed. Valves in the noted chambers shall not be removed and/or reinstalled.

QUESTION NO. 20: Is there a detail drawing for the proposed 72" x 48" Steel Tee at the intersection of 41st St. and 25th Ave?

ANSWER NO. 20: The 72 inch x 48 inch steel outlet shall be as per standard drawing 38226-Y-A.

QUESTION NO. 21: Item Nos. 61.11DFM20, Furnishing and Delivering 20-inch Flanged-Mechanical Jt. Gate Valve, 61.12DFM20, Installing 20-inch Flanged-Mechanical Gate Valve and 65.41PS20, F/D/I 20-inch Pipe to Wall Penetration Seal are included in the list of bid items but said work is not indicated on the contract drawings. Please clarify.

ANSWER NO. 21: These items are added as contingent items and need to be used at the Engineer's discretion.

QUESTION NO. 22: Are original pipe fabrication drawings for existing 60" Trunk Main in Crescent Street available for contractor review?

ANSWER NO. 22: Original pipe fabrication drawings are not available however; some field cards and existing Butterfly Valve Chamber and piping arrangement details are included as reference drawings BFV1 thru BFV4 attached to this Addendum.

QUESTION NO. 23: Is the existing 60" Trunk Main presently out of service and shutdown?

ANSWER NO. 23: The existing 60 inch Trunk Main is currently out of service. It has been shut down since 1988.

QUESTION NO. 24: Is the existing 60" Trunk Main mortar or epoxy lined? If mortar lined please confirm I.D. is expected to be 59".

ANSWER NO. 24: The interior coating of the existing 60" steel main is coal tar enamel based and the inside diameter is 60 inches.

QUESTION NO. 25: If 60" Trunk Main is in service can summer Trunk Main embargos be waived? Contract work cannot be complete in two seven month shutdown windows.

ANSWER NO. 25: Refer to Answer No. 23.

QUESTION NO. 26: With reference to section U version 2.0, pages U1 - U17; As pre-engineering has been complete, items of work included or test pits performed the contractor cannot evaluate the impact private utility support & protection will have on schedule 'A' contract duration. If the City deems this work included in schedule 'A' duration we request a breakdown of work included or City duration of time estimated in schedule 'A' to complete work.

ANSWER NO. 26: The Contractor shall coordinate with the utility companies for scope of work and refer to the contract drawings.

QUESTION NO. 27: The following questions (A thru I) relate to contract note on sheet 6 of 15, "Removal, Reinstallation and Testing of Existing 48" Butterfly Line Valves in Existing Chambers":

A. There are 3 each Double 48" Butterfly Valve Chambers & 3 Each single Butterfly Valve Chambers within the contract limits, are all 9 each 48" Valves to be removed, tested and reinstalled?

ANSWER A: There are 2 Double 48 inch Butterfly Valve Chambers & 2 single 48 inch Butterfly Valve Chambers within the contract limits totaling six, (6), 48 inch Valves to be removed & replaced. New valves in place of existing valves are included in this project as per this addendum. Valve locations are called out on the contract drawings. See attached revised sheet No. 6R of 15.

B. Who is the Manufacturer of the existing Butterfly Valves and Actuators?

ANSWER B: The manufacturer of the existing Butterfly Valves is no longer required since the installation of new Butterfly Valves is included.

C. Is testing required to be at a NYC DEP approved valve manufacturer's facility?

ANSWER C: The testing of the existing Butterfly Valves is no longer required since the installation of new Butterfly Valves is included.

D. Contract notes state "Section 8 Proof of Design Tests" shall be followed. Is the intent to have existing valves removed, shipped to manufacturer and perform section 9 "Shop Testing" and recertification?

ANSWER D: Refer to Answer C above.

E. If valve fails testing procedure will repair work be performed under separate change order?

ANSWER E: Refer to Answer C above.

F. Are new SS fasteners required at all valves?

ANSWER F: The contractor shall install new valves with all new accessories including, but not limited to, bolts, nuts washers, insulation kits, fasteners, etc. as per the latest standards and specifications.

G. Which valve chambers require installation of 48" split sleeve coupling, Item 60.27RSC48?

ANSWER G: All of the four Butterfly Valve Chambers require a 48" Split Sleeve Coupling. Refer to attached revised Sheet No. 6R of 15.

H. Installations of split sleeve couplings require preparation/installation of 48" steel pipe. Will pipe be paid under applicable contract items?

ANSWER H: The 48 inch pipe will be paid under Item No. 60.21SP4T48 - FURNISHING, DELIVERING AND LAYING 48-INCH STRAIGHT STEEL PIPE, 1/2-INCH WALL THICKNESS. There will be no separate payment for various components, including 6-inch outlet, 6-inch steel piping and 6-inch flanged flanged valve for installing complete by-pass valve arrangement, but payment for these components will be deemed included in the unit price bid for Item No. 60.27RSC48 - FURNISHING, DELIVERING AND INSTALLING 48-INCH DIAMETER BOLTED SPLIT SLEEVE-TYPE RESTRAINED COUPLING.

I. Note states: Contractor shall install 6" external bypass", do existing removable roof slabs have casting accommodations for valve operation? If not, will contractor be paid for installation of new roof slabs under applicable contract items?

ANSWER I: The existing chambers are constructed based on the standard drawing 44588-A-X dated December 1984, which shows existing removable roof slabs with casting accommodations for valve operations. Refer to reference details drawings BFV1 thru BFV4 attached to this Addendum. The Contractor shall modify the means and methods to accommodate the existing castings on removable slabs for valve operations as per the reference detail drawings attached to this Addendum as to the satisfaction of the Engineer and/or as directed by the Engineer.

QUESTION NO. 28: With reference to the proposed 72' X 48' steel tee in the intersection of 41st Street and 25th Avenue on sheet 14 of 15. There appears to be no contract bid item to furnish/deliver & install said tee, also no details are given on tee fabrication. Was an item missed or will 48" outlet be paid under item 60.25PSO Steel Plate Outlets?

ANSWER NO. 28: The outlet is as per standard drawing 38226Y-A and will be paid under Item No. 60.25PSO - FURNISHING, DELIVERING AND INSTALLING PLATE STEEL OUTLETS ON STEEL PIPE, ACCESS MANHOLE OUTLETS WITH COVERS, AND NUTS AND BOLTS COMPLETE.

QUESTION NO. 29: There is wording in the specification for ensuring that a review and eval by the contractor of the host pipe is required. I would suggest that a separate bid item for a pulling mandrel (pig) to verify host pipe internal diameter, ovality, max lengths for pulling through to evaluate against the "as built" original drawings from the 1980's installation.

ANSWER NO. 29: Refer to the SEWER AND WATER MAIN REVISIONS TO SPECIFICATIONS, page SW-17, Section 60.61.12 "PRICE TO COVER" INSPECTING, TEST RUN WITH TEST PIG will be deemed included in the contract price for "FURNISHING, DELIVERING AND INSTALLING STEEL WATERMAIN PIPE BY SLIP LINING METHOD..." therefore no separate payment shall be made.

QUESTION NO. 30: Please confirm that the original host pipe has a painted epoxy lining in it, and NOT a CML. As if it is a CML, we would be losing an inch of clearance for the slipline application. I don't think that PRO-FAB had a CML machine back in the 1980's and I do remember seeing the pipe at the jobsite with a painted epoxy, but we just need to verity this.

ANSWER NO. 30: The interior coating of the existing 60 inch steel main is coal tar enamel based.

QUESTION NO. 31: There is a bid item for one (1) 48" outlet on the 52" OD pipe. In addition, there is a detail showing what is needed to fabricate and cost this item out. But there is also a 48" outlet required on a 72" piece of pipe on sheet 14 plan and sheet 15 profile that is NOT in the bid form and IS NOT detailed in the drawings for this size, wall thickness. Please suggest that you include a detail drawing, information and a bid item for this 72" by 48" outlet.

ANSWER NO. 31: There is no bid item for one (1) 48 inch outlet on the 52 inch O.D. pipe in the contract. Plate steel outlets on steel pipe shall be paid under item "60.25PSO Furnishing, Delivering And Installing Plate Steel Outlets On Steel Pipe, Access Manhole Outlets With Covers, And Nuts And Bolts Complete". There is an item for 52 inch X 48 inch Steel Tee. The cost shall be paid under item "60.23ST48T52". As per sheet 14R plan and sheet 15R profile, one (1) 48 inch Plate Steel Outlet is required on 72 inch Steel pipe and the outlet shall be in accordance with standard drawing 38226-Y-A and the cost shall be paid under the Item No. 60.25PSO.

QUESTION NO. 32: What type of external coating do you want for the direct bury pit locations? The standard NYC spec for direct bury is tape coating. But this project requires a Polyurethane coating for the slipline. Do you want Polyurethane or Tape for the direct bury slipline areas?

ANSWER NO. 32: All direct buried pipe shall be tape wrapped and installed in accordance with "New York City Department of Environmental Protection (NYCDEP) Specifications For Trunk Main Work. (This publication includes Special Provisions For Trunk Main Work; and, Specification For Furnishing, Delivering And Laying Steel Pipe And Appurtenances).

QUESTION NO. 33: We have a bid item for 48" bolted, split sleeve couplings (D-O-L). The last paragraph for note #1 on drawing 6 says that a 6" bypass piping with outlets, valves, etc. is to be provided under this bid item. It says nothing about the actual 48" coupling. I am assuming we DO NOT supply a new 48" coupling. Please confirm this.

ANSWER NO. 33: Refer to Item No. 60.27RSC48 - Furnishing, Delivering And Installing 48 Inch Diameter Bolted, Split Sleeve – Type Restrained Coupling" , the quantity is four (4), shall be installed in lieu of an expansion joint in every existing Butterfly Valve Chamber as shown on the contract drawings. The contractor shall furnish, deliver and install four (4) new couplings. There is no direct payment for various components as per Specifications For Trunk Water Main.

QUESTION NO. 34: We also have a bid item for 48" pipe-to-wall penetrations, including wall sleeve and seep ring. If we are to leave the valve chambers as is, can we assume we would butt strap the new pipe to the existing pipe OUTSIDE of the chamber wall? No new wall sleeve would be needed? Where are we to cut the existing pipe to connect to the new pipe? Please clarify.

ANSWER NO. 34: As per this Addendum, new 48 inch Butterfly Valves and new 48 inch pipe shall be installed in the existing chambers. It is not the intention to replace existing wall sleeves however; new link seals shall be installed.

BID SCHEDULE

NOTE: (1) The Agency may reject a bid if it contains unbalanced bid prices. An unbalanced bid is considered to be one containing lump sum or unit items which do not reflect reasonable actual costs plus a reasonable proportionate share of the Bidder's anticipated profit, overhead costs, and other indirect costs, anticipated for the performance of the items in question.

(2) The following bid prices on Unit Price Contracts are to be paid for the actual quantities of the item numbers in the completed work or structure, and they cover the cost of all work, labor, material, tools, plant and appliances of every description necessary to complete the entire work, as specified, and the removal of all debris, temporary work and appliances.

(3) PLEASE BE SURE A LEGIBLE BID IS ENTERED, IN INK, FOR EACH ITEM.
Alterations must be initialed in ink by the bidder.

(4) The Extended Amount entered in Column 6 shall be the product of the Estimated Quantity in Column 3 times the Unit Price Bid in Column 5.

(5) Prospective bidders must examine the Bid Schedule carefully and, before bidding, must advise the Commissioner, in writing, if any pages are missing, and must request that such missing pages be furnished them. The pages of this Bid Schedule are numbered consecutively, as follows:
B - 3 [REVISION # 1] Through B - 41 [REVISION # 1]

PLEASE BE SURE A LEGIBLE BID IS ENTERED FOR EACH ITEM.
THE BIDDER SHALL INSERT THE TOTAL BID PRICE IN
THE BID FORM ON PAGE C-4 OF THIS BID BOOKLET.

NEW YORK CITY DEPARTMENT OF DESIGN AND CONSTRUCTION
DIVISION OF INFRASTRUCTURE - BUREAU OF DESIGN

PROJECT ID: QED1014
CONTRACT PIN: 8502016WM0005C

BID SCHEDULE FORM

COL. 1 SEQ. NO	COL. 2 ITEM NUMBER and DESCRIPTION	COL. 3 ENGINEER'S ESTIMATE OF QUANTITY	COL. 4 UNIT	COL. 5 UNIT PRICE (IN FIGURES) DOLLARS	CTS	COL. 6 EXTENDED AMOUNT (IN FIGURES) DOLLARS	CTS
001	4.02 AB-R ASPHALTIC CONCRETE WEARING COURSE, 1-1/2" THICK	1,965.00	S.Y.				
002	4.02 AF-R ASPHALTIC CONCRETE WEARING COURSE, 2" THICK	2,100.00	S.Y.				
003	4.02 CA BINDER MIXTURE	577.00	TONS				
004	4.04 B CONCRETE BASE FOR PAVEMENT, VARIABLE THICKNESS FOR TRENCH RESTORATION, CLASS B-32	285.00	C.Y.				
005	4.04 H CONCRETE BASE FOR PAVEMENT, VARIABLE THICKNESS FOR TRENCH RESTORATION, (HIGH-EARLY STRENGTH)	710.00	C.Y.				
006	4.08 BA CONCRETE CURB (21" DEEP)	1,240.00	L.F.				

NEW YORK CITY DEPARTMENT OF DESIGN AND CONSTRUCTION
DIVISION OF INFRASTRUCTURE - BUREAU OF DESIGN

PROJECT ID: QED1014
CONTRACT PIN: 8502016WM0005C

BID SCHEDULE FORM

COL. 1 SEQ. NO	COL. 2 ITEM NUMBER and DESCRIPTION	COL. 3 ENGINEER'S ESTIMATE OF QUANTITY	COL. 4 UNIT	COL. 5 UNIT PRICE (IN FIGURES) DOLLARS	CTS	COL. 6 EXTENDED AMOUNT (IN FIGURES) DOLLARS	CTS
007	4.09 AE STRAIGHT STEEL FACED CONCRETE CURB (21" DEEP)	700.00	L.F.				
008	4.09 BE DEPRESSED STEEL FACED CONCRETE CURB (21" DEEP)	145.00	L.F.				
009	4.09 CE CORNER STEEL FACED CONCRETE CURB (21" DEEP)	125.00	L.F.				
010	4.13 AAS 4" CONCRETE SIDEWALK (UNPIGMENTED)	5,360.00	S.F.				
011	4.13 ABS 4" CONCRETE SIDEWALK (PIGMENTED)	2,450.00	S.F.				
012	4.13 BAS 7" CONCRETE SIDEWALK (UNPIGMENTED)	900.00	S.F.				

NEW YORK CITY DEPARTMENT OF DESIGN AND CONSTRUCTION
DIVISION OF INFRASTRUCTURE - BUREAU OF DESIGN

PROJECT ID: QED1014
CONTRACT PIN: 8502016WM0005C

BID SCHEDULE FORM

COL. 1 SEQ. NO	COL. 2 ITEM NUMBER and DESCRIPTION	COL. 3 ENGINEER'S ESTIMATE OF QUANTITY	COL. 4 UNIT	COL. 5 UNIT PRICE (IN FIGURES) DOLLARS	CTS	COL. 6 EXTENDED AMOUNT (IN FIGURES) DOLLARS	CTS
013	**4.13 BBS** 7" CONCRETE SIDEWALK (PIGMENTED)	700.00	S.F.				
014	**4.13 DE** EMBEDDED PREFORMED DETECTABLE WARNING UNITS	200.00	S.F.				
015	**4.13 DSA** SURFACE APPLIED DETECTABLE WARNING UNITS	130.00	S.F.				
016	**4.15** TOPSOIL	40.00	C.Y.				
017	**4.16 AA** TREES REMOVED (4" TO UNDER 12" CALIPER)	11.00	EACH				
018	**4.16 AB** TREES REMOVED (12" TO UNDER 18" CALIPER)	4.00	EACH				

NEW YORK CITY DEPARTMENT OF DESIGN AND CONSTRUCTION
DIVISION OF INFRASTRUCTURE - BUREAU OF DESIGN

PROJECT ID: QED1014
CONTRACT PIN: 8502016WM0005C

BID SCHEDULE FORM

COL. 1 SEQ. NO	COL. 2 ITEM NUMBER and DESCRIPTION	COL. 3 ENGINEER'S ESTIMATE OF QUANTITY	COL. 4 UNIT	COL. 5 UNIT PRICE (IN FIGURES) DOLLARS	CTS	COL. 6 EXTENDED AMOUNT (IN FIGURES) DOLLARS	CTS
019	**4.16 AC** TREES REMOVED (18" TO UNDER 24" CALIPER)	2.00	EACH				
020	**4.16 AD** TREES REMOVED (24" CALIPER AND OVER)	1.00	EACH				
021	**4.16 BA505** TREES PLANTED, 2-1/2" TO 3" CALIPER, ALL TYPES, IN 5' X 5' TREE PITS	50.00	EACH				
022	**4.18 A** MAINTENANCE TREE PRUNING (UNDER 12" CAL.)	8.00	EACH				
023	**4.18 B** MAINTENANCE TREE PRUNING (12" TO UNDER 18" CAL.)	1.00	EACH				
024	**4.18 C** MAINTENANCE TREE PRUNING (18" TO UNDER 24" CAL.)	2.00	EACH				

NEW YORK CITY DEPARTMENT OF DESIGN AND CONSTRUCTION
DIVISION OF INFRASTRUCTURE - BUREAU OF DESIGN

PROJECT ID: QED1014
CONTRACT PIN: 8502016WM0005C

BID SCHEDULE FORM

COL. 1 SEQ. NO	COL. 2 ITEM NUMBER and DESCRIPTION	COL. 3 ENGINEER'S ESTIMATE OF QUANTITY	COL. 4 UNIT	COL. 5 UNIT PRICE (IN FIGURES) DOLLARS	CTS	COL. 6 EXTENDED AMOUNT (IN FIGURES) DOLLARS	CTS
025	4.18 D MAINTENANCE TREE PRUNING (24" CAL. AND OVER)	2.00	EACH				
026	4.21 TREE CONSULTANT	500.00	P/HR				
027	50.31CC12 12" E.S.V.P. COMBINED SEWER, ON CONCRETE CRADLE	450.00	L.F.				
028	50.31CC15 15" E.S.V.P. COMBINED SEWER, ON CONCRETE CRADLE	200.00	L.F.				
029	50.72C0300EB0400 RECONSTRUCTION OF EXISTING 3'-0"W X 4'-0"H EGG-SHAPED BRICK COMBINED SEWER USING SHOTCRETE METHOD	160.00	L.F.				
030	51.21S0A1000E STANDARD MANHOLE TYPE A-1 ON EXISTING SEWER	3.00	EACH				

NEW YORK CITY DEPARTMENT OF DESIGN AND CONSTRUCTION
DIVISION OF INFRASTRUCTURE - BUREAU OF DESIGN

PROJECT ID: QED1014
CONTRACT PIN: 8502016WM0005C

BID SCHEDULE FORM

COL. 1 SEQ. NO	COL. 2 ITEM NUMBER and DESCRIPTION	COL. 3 ENGINEER'S ESTIMATE OF QUANTITY	COL. 4 UNIT	COL. 5 UNIT PRICE (IN FIGURES) DOLLARS	CTS	COL. 6 EXTENDED AMOUNT (IN FIGURES) DOLLARS	CTS
031	51.21S0A1000V STANDARD MANHOLE TYPE A-1	3.00	EACH				
032	51.21S0A2000E STANDARD MANHOLE TYPE A-2 ON EXISTING SEWER	1.00	EACH				
033	51.21S0A2000V STANDARD MANHOLE TYPE A-2	3.00	EACH				
034	51.22RS RECONSTRUCTION OF EXISTING MANHOLE ON EXISTING SHOTCRETED SEWER	2.00	EACH				
035	51.23RF REPLACEMENT OF EXISTING MANHOLE FRAME AND COVER	5.00	EACH				
036	51.41S001 STANDARD CATCH BASIN, TYPE 1	13.00	EACH				

BID SCHEDULE FORM

COL. 1 SEQ. NO	COL. 2 ITEM NUMBER and DESCRIPTION	COL. 3 ENGINEER'S ESTIMATE OF QUANTITY	COL. 4 UNIT	COL. 5 UNIT PRICE (IN FIGURES) DOLLARS	CTS	COL. 6 EXTENDED AMOUNT (IN FIGURES) DOLLARS	CTS
037	**51.41S003** STANDARD CATCH BASIN, TYPE 3	3.00	EACH				
038	**51.42S1SO** INCREMENTAL COST OF STANDARD CATCH BASIN TYPE 3 WITH CURB PIECE IN LIEU OF STANDARD CATCH BASIN TYPE 1	3.00	EACH				
039	**52.11D12** 12" DUCTILE IRON PIPE BASIN CONNECTION	400.00	L.F.				
040	**52.31V06C12** 6" E.S.V.P. SPUR FOR HOUSE CONNECTION ON 12" E.S.V.P. COMBINED SEWER	40.00	EACH				
041	**52.31V06C15** 6" E.S.V.P. SPUR FOR HOUSE CONNECTION ON 15" E.S.V.P. COMBINED SEWER	5.00	EACH				
042	**52.31V08C12** 8" E.S.V.P. SPUR FOR HOUSE CONNECTION ON 12" E.S.V.P. COMBINED SEWER	40.00	EACH				

NEW YORK CITY DEPARTMENT OF DESIGN AND CONSTRUCTION
DIVISION OF INFRASTRUCTURE - BUREAU OF DESIGN

PROJECT ID: QED1014
CONTRACT PIN: 8502016WM0005C

BID SCHEDULE FORM

COL. 1 SEQ. NO	COL. 2 ITEM NUMBER and DESCRIPTION	COL. 3 ENGINEER'S ESTIMATE OF QUANTITY	COL. 4 UNIT	COL. 5 UNIT PRICE (IN FIGURES) DOLLARS	CTS	COL. 6 EXTENDED AMOUNT (IN FIGURES) DOLLARS	CTS
043	**52.31V08C15** 8" E.S.V.P. SPUR FOR HOUSE CONNECTION ON 15" E.S.V.P. COMBINED SEWER	5.00	EACH				
044	**52.41D06R** 6" D.I.P. HOUSE CONNECTION DRAIN ON CONCRETE CRADLE (RECONNECTION)	75.00	L.F.				
045	**52.41D08R** 8" D.I.P. HOUSE CONNECTION DRAIN ON CONCRETE CRADLE (RECONNECTION)	125.00	L.F.				
046	**52.41V06R** 6" E.S.V.P. HOUSE CONNECTION DRAIN ON CONCRETE CRADLE (RECONNECTION)	125.00	L.F.				
047	**52.41V08R** 8" E.S.V.P. HOUSE CONNECTION DRAIN ON CONCRETE CRADLE (RECONNECTION)	125.00	L.F.				
048	**53.11DR** TELEVISION INSPECTION AND DIGITAL AUDIO-VISUAL RECORDING OF SEWERS	1,300.00	L.F.				

NEW YORK CITY DEPARTMENT OF DESIGN AND CONSTRUCTION
DIVISION OF INFRASTRUCTURE - BUREAU OF DESIGN

PROJECT ID: QED1014
CONTRACT PIN: 8502016WM0005C

BID SCHEDULE FORM

COL. 1 SEQ. NO	COL. 2 ITEM NUMBER and DESCRIPTION	COL. 3 ENGINEER'S ESTIMATE OF QUANTITY	COL. 4 UNIT	COL. 5 UNIT PRICE (IN FIGURES) DOLLARS	CTS	COL. 6 EXTENDED AMOUNT (IN FIGURES) DOLLARS	CTS
049	54.11SC SEWER CLEANING	160.00	L.F.				
050	54.21PC PORTLAND CEMENT (TYPE V) - INJECTION GROUTING	100.00	BAGS				
051	54.31SR SHOTCRETE FOR REPAIR WORK	500.00	C.F.				
052	6.02 AAN UNCLASSIFIED EXCAVATION	801.00	C.Y.				
053	6.02 XSCW INCREMENTAL COST FOR USING SPECIAL CARE WORK METHODS NEAR (FROM 3 FEET TO 50 FEET) TRANSIT FACILITIES	130.00	C.Y.				
054	6.25 RS TEMPORARY SIGNS	3,330.00	S.F.				

NEW YORK CITY DEPARTMENT OF DESIGN AND CONSTRUCTION
DIVISION OF INFRASTRUCTURE - BUREAU OF DESIGN

PROJECT ID: QED1014
CONTRACT PIN: 8502016WM0005C

BID SCHEDULE FORM

COL. 1 SEQ. NO	COL. 2 ITEM NUMBER and DESCRIPTION	COL. 3 ENGINEER'S ESTIMATE OF QUANTITY	COL. 4 UNIT	COL. 5 UNIT PRICE (IN FIGURES) DOLLARS	CTS	COL. 6 EXTENDED AMOUNT (IN FIGURES) DOLLARS	CTS
055	6.26 TIMBER CURB	7,610.00	L.F.				
056	6.28 AA LIGHTED TIMBER BARRICADES	2,000.00	L.F.				
057	6.34 ACT TEMPORARY CHAIN LINK FENCE, 6'-0" HIGH	9,035.00	L.F.				
058	6.34 ACTP TEMPORARY CHAIN LINK FENCE, 6'-0" HIGH (WITH TOP AND BOTTOM RAILS AND POSTS MOUNTED ON STEEL PLATES)	9,035.00	L.F.				
059	6.40 D ENGINEER'S FIELD OFFICE (TYPE D)	30.00	MONTH				
060	6.44 THERMOPLASTIC REFLECTORIZED PAVEMENT MARKINGS (4" WIDE)	20,830.00	L.F.				

NEW YORK CITY DEPARTMENT OF DESIGN AND CONSTRUCTION
DIVISION OF INFRASTRUCTURE - BUREAU OF DESIGN

PROJECT ID: QED1014
CONTRACT PIN: 8502016WM0005C

BID SCHEDULE FORM

COL. 1 SEQ. NO.	COL. 2 ITEM NUMBER and DESCRIPTION	COL. 3 ENGINEER'S ESTIMATE OF QUANTITY	COL. 4 UNIT	COL. 5 UNIT PRICE (IN FIGURES) DOLLARS	CTS	COL. 6 EXTENDED AMOUNT (IN FIGURES) DOLLARS	CTS
061	6.49 TEMPORARY PAVEMENT MARKINGS (4" WIDE)	17,955.00	L.F.				
062	6.50 CLEANING OF DRAINAGE STRUCTURES	1.00	EACH				
063	6.52 CG CROSSING GUARD	7,080.00	P/HR				
064	6.53 REMOVE EXISTING LANE MARKINGS (4" WIDE)	17,955.00	L.F.				
065	6.59 P TEMPORARY CONCRETE BARRIER	10,385.00	L.F.				
066	6.87 PLASTIC BARRELS	2,080.00	EACH				

NEW YORK CITY DEPARTMENT OF DESIGN AND CONSTRUCTION
DIVISION OF INFRASTRUCTURE - BUREAU OF DESIGN

PROJECT ID: QED1014
CONTRACT PIN: 8502016WM0005C

BID SCHEDULE FORM

COL. 1 SEQ. NO	COL. 2 ITEM NUMBER and DESCRIPTION	COL. 3 ENGINEER'S ESTIMATE OF QUANTITY	COL. 4 UNIT	COL. 5 UNIT PRICE (IN FIGURES) DOLLARS	CTS	COL. 6 EXTENDED AMOUNT (IN FIGURES) DOLLARS	CTS
067	**60.11R520** FURNISHING AND DELIVERING 20-INCH DUCTILE IRON RESTRAINED JOINT PIPE (CLASS 55)	100.00	L.F.				
068	**60.11R606** FURNISHING AND DELIVERING 6-INCH DUCTILE IRON RESTRAINED JOINT PIPE (CLASS 56)	480.00	L.F.				
069	**60.11R608** FURNISHING AND DELIVERING 8-INCH DUCTILE IRON RESTRAINED JOINT PIPE (CLASS 56)	120.00	L.F.				
070	**60.11R612** FURNISHING AND DELIVERING 12-INCH DUCTILE IRON RESTRAINED JOINT PIPE (CLASS 56)	420.00	L.F.				
071	**60.12D06** LAYING 6-INCH DUCTILE IRON PIPE AND FITTINGS	550.00	L.F.				
072	**60.12D08** LAYING 8-INCH DUCTILE IRON PIPE AND FITTINGS	135.00	L.F.				

BID SCHEDULE FORM

COL. 1 SEQ. NO	COL. 2 ITEM NUMBER and DESCRIPTION	COL. 3 ENGINEER'S ESTIMATE OF QUANTITY	COL. 4 UNIT	COL. 5 UNIT PRICE (IN FIGURES) DOLLARS	CTS	COL. 6 EXTENDED AMOUNT (IN FIGURES) DOLLARS	CTS
073	60.12D12 LAYING 12-INCH DUCTILE IRON PIPE AND FITTINGS	495.00	L.F.				
074	60.12D20 LAYING 20-INCH DUCTILE IRON PIPE AND FITTINGS	130.00	L.F.				
075	60.13M0A24 FURNISHING AND DELIVERING DUCTILE IRON MECHANICAL JOINT 24 -INCH DIAMETER AND SMALLER FITTINGS, INCLUDING WEDGE TYPE RETAINER GLANDS	11.00	TONS				
076	60.21SP4T48 FURNISHING, DELIVERING AND LAYING 48-INCH STRAIGHT STEEL PIPE, 1/2-INCH WALL THICKNESS	100.00	L.F.				
077	60.21SP4T52 FURNISHING, DELIVERING AND LAYING 52-INCH STRAIGHT STEEL PIPE, 1/2-INCH WALL THICKNESS	1,250.00	L.F.				
078	60.21SP5T60 FURNISHING, DELIVERING AND LAYING 60-INCH STRAIGHT STEEL PIPE, 5/8-INCH WALL THICKNESS	50.00	L.F.				

NEW YORK CITY DEPARTMENT OF DESIGN AND CONSTRUCTION
DIVISION OF INFRASTRUCTURE - BUREAU OF DESIGN

PROJECT ID: QED1014
CONTRACT PIN: 8502016WM0005C

BID SCHEDULE FORM

COL 1 SEQ. NO	COL 2 ITEM NUMBER and DESCRIPTION	COL 3 ENGINEER'S ESTIMATE OF QUANTITY	COL 4 UNIT	COL 5 UNIT PRICE (IN FIGURES) DOLLARS	CTS	COL 6 EXTENDED AMOUNT (IN FIGURES) DOLLARS	CTS
079	**60.21SP6T72** FURNISHING, DELIVERING AND LAYING 72-INCH STRAIGHT STEEL PIPE, 3/4-INCH WALL THICKNESS	200.00	L.F.				
080	**60.22BR4T52** FURNISHING, DELIVERING AND LAYING 52-INCH STEEL BENDS AND REDUCERS, 1/2-INCH WALL THICKNESS	75.00	L.F.				
081	**60.22BR5T60** FURNISHING, DELIVERING AND LAYING 60-INCH STEEL BENDS AND REDUCERS, 5/8-INCH WALL THICKNESS	7.00	L.F.				
082	**60.22BR6T72** FURNISHING, DELIVERING AND LAYING 72-INCH STEEL BENDS AND REDUCERS, 3/4-INCH WALL THICKNESS	60.00	L.F.				
083	**60.23ST48T52** FURNISHING, DELIVERING AND INSTALLING 52-INCH X 48-INCH STEEL TEE	1.00	EACH				
084	**60.25PSO** FURNISHING, DELIVERING AND INSTALLING PLATE STEEL OUTLETS ON STEEL PIPE, ACCESS MANHOLE OUTLETS WITH COVERS, AND NUTS AND BOLTS COMPLETE	34,200.00	LBS.				

BID SCHEDULE FORM

COL. 1 SEQ. NO	COL. 2 ITEM NUMBER and DESCRIPTION	COL. 3 ENGINEER'S ESTIMATE OF QUANTITY	COL. 4 UNIT	COL. 5 UNIT PRICE (IN FIGURES) DOLLARS	CTS	COL. 6 EXTENDED AMOUNT (IN FIGURES) DOLLARS	CTS
085	**60.27RSC48** FURNISHING, DELIVERING AND INSTALLING 48-INCH DIAMETER BOLTED, SPLIT SLEEVE-TYPE RESTRAINED COUPLING	4.00	EACH				
086	**60.29CP** FURNISHING, INSTALLING AND TESTING CORROSION CONTROL AND/OR CATHODIC PROTECTION SYSTEM	1.00	L.S.				
087	**60.61SLM52S** FURNISHING, DELIVERING AND INSTALLING 52-INCH STRAIGHT STEEL WATER MAIN PIPE BY SLIP-LINING METHOD	7,100.00	L.F.				
088	**61.11DFM06** FURNISHING AND DELIVERING 6-INCH FLANGED-MECHANICAL JOINT DUCTILE IRON GATE VALVE COMPLETE WITH WEDGE TYPE RETAINER GLAND	18.00	EACH				
089	**61.11DFM12** FURNISHING AND DELIVERING 12-INCH FLANGED-MECHANICAL JOINT DUCTILE IRON GATE VALVE COMPLETE WITH WEDGE TYPE RETAINER GLAND	1.00	EACH				

NEW YORK CITY DEPARTMENT OF DESIGN AND CONSTRUCTION
DIVISION OF INFRASTRUCTURE - BUREAU OF DESIGN

PROJECT ID: QED1014
CONTRACT PIN: 8502016WM0005C

BID SCHEDULE FORM

COL. 1 SEQ. NO.	COL. 2 ITEM NUMBER and DESCRIPTION	COL. 3 ENGINEER'S ESTIMATE OF QUANTITY	COL. 4 UNIT	COL. 5 UNIT PRICE (IN FIGURES) DOLLARS	CTS	COL. 6 EXTENDED AMOUNT (IN FIGURES) DOLLARS	CTS
090	**61.11DFM20** FURNISHING AND DELIVERING 20-INCH FLANGED-MECHANICAL JOINT DUCTILE IRON GATE VALVE COMPLETE WITH WEDGE TYPE RETAINER GLAND	1.00	EACH				
091	**61.11DMM12** FURNISHING AND DELIVERING 12-INCH MECHANICAL JOINT DUCTILE IRON GATE VALVE COMPLETE WITH WEDGE TYPE RETAINER GLANDS	2.00	EACH				
092	**61.11DMM20** FURNISHING AND DELIVERING 20-INCH MECHANICAL JOINT DUCTILE IRON GATE VALVE COMPLETE WITH WEDGE TYPE RETAINER GLANDS	1.00	EACH				
093	**61.11TWC04** FURNISHING AND DELIVERING 4-INCH WET CONNECTION TAPPING VALVE COMPLETE WITH WEDGE TYPE RETAINER GLANDS	5.00	EACH				
094	**61.11TWC06** FURNISHING AND DELIVERING 6-INCH WET CONNECTION TAPPING VALVE COMPLETE WITH WEDGE TYPE RETAINER GLANDS	5.00	EACH				

BID SCHEDULE FORM

COL. 1 SEQ. NO	COL. 2 ITEM NUMBER and DESCRIPTION	COL. 3 ENGINEER'S ESTIMATE OF QUANTITY	COL. 4 UNIT	COL. 5 UNIT PRICE (IN FIGURES) DOLLARS	CTS	COL. 6 EXTENDED AMOUNT (IN FIGURES) DOLLARS	CTS
095	**61.11TWC08** FURNISHING AND DELIVERING 8-INCH WET CONNECTION TAPPING VALVE COMPLETE WITH WEDGE TYPE RETAINER GLANDS	3.00	EACH				
096	**61.12DFM06** SETTING 6-INCH FLANGED-MECHANICAL JOINT DUCTILE IRON GATE VALVE COMPLETE WITH WEDGE TYPE RETAINER GLAND	18.00	EACH				
097	**61.12DFM12** SETTING 12-INCH FLANGED-MECHANICAL JOINT DUCTILE IRON GATE VALVE COMPLETE WITH WEDGE TYPE RETAINER GLAND	1.00	EACH				
098	**61.12DFM20** SETTING 20-INCH FLANGED-MECHANICAL JOINT DUCTILE IRON GATE VALVE COMPLETE WITH WEDGE TYPE RETAINER GLAND	1.00	EACH				
099	**61.12DMM12** SETTING 12-INCH MECHANICAL JOINT DUCTILE IRON GATE VALVE COMPLETE WITH WEDGE TYPE RETAINER GLANDS	2.00	EACH				
100	**61.12DMM20** SETTING 20-INCH MECHANICAL JOINT DUCTILE IRON GATE VALVE COMPLETE WITH WEDGE TYPE RETAINER GLANDS	1.00	EACH				

NEW YORK CITY DEPARTMENT OF DESIGN AND CONSTRUCTION
DIVISION OF INFRASTRUCTURE - BUREAU OF DESIGN

PROJECT ID: QED1014
CONTRACT PIN: 8502016WM0005C

BID SCHEDULE FORM

COL. 1 SEQ. NO.	COL. 2 ITEM NUMBER and DESCRIPTION	COL. 3 ENGINEER'S ESTIMATE OF QUANTITY	COL. 4 UNIT	COL. 5 UNIT PRICE (IN FIGURES) DOLLARS	CTS	COL. 6 EXTENDED AMOUNT (IN FIGURES) DOLLARS	CTS
101	**61.12TWC04** SETTING 4-INCH WET CONNECTION TAPPING VALVE COMPLETE WITH WEDGE TYPE RETAINER GLANDS	5.00	EACH				
102	**61.12TWC06** SETTING 6-INCH WET CONNECTION TAPPING VALVE COMPLETE WITH WEDGE TYPE RETAINER GLANDS	5.00	EACH				
103	**61.12TWC08** SETTING 8-INCH WET CONNECTION TAPPING VALVE COMPLETE WITH WEDGE TYPE RETAINER GLANDS	3.00	EACH				
104	**61.21BVB48** FURNISHING, DELIVERING AND INSTALLING 48-INCH BUTTERFLY VALVE WITH BY-PASS ARRANGEMENT AND OUTLET, COMPLETE	6.00	EACH				
105	**62.11SD** FURNISHING AND DELIVERING HYDRANTS	9.00	EACH				
106	**62.12SG** SETTING HYDRANTS COMPLETE WITH WEDGE TYPE RETAINER GLANDS	9.00	EACH				

NEW YORK CITY DEPARTMENT OF DESIGN AND CONSTRUCTION
DIVISION OF INFRASTRUCTURE - BUREAU OF DESIGN

PROJECT ID: QED1014
CONTRACT PIN: 8502016WM0005C

BID SCHEDULE FORM

COL. 1 SEQ. NO	COL. 2 ITEM NUMBER and DESCRIPTION	COL. 3 ENGINEER'S ESTIMATE OF QUANTITY	COL. 4 UNIT	COL. 5 UNIT PRICE (IN FIGURES) DOLLARS	CTS	COL. 6 EXTENDED AMOUNT (IN FIGURES) DOLLARS	CTS
107	62.13RH REMOVING HYDRANTS	7.00	EACH				
108	62.14FS FURNISHING, DELIVERING AND INSTALLING HYDRANT FENDERS	27.00	EACH				
109	63.11MH FURNISHING, DELIVERING AND INSTALLING 36-INCH CAST IRON MANHOLE HEADS AND COVERS	12.00	TONS				
110	63.11MS FURNISHING, DELIVERING AND INSTALLING MANHOLE STEPS TYPE PS2-PF	300.00	EACH				
111	63.11VC FURNISHING AND DELIVERING VARIOUS CASTINGS	41.00	TONS				
112	64.11EL WITHDRAWING AND REPLACING HOUSE SERVICES USING 1-1/2-INCH OR LARGER SCREW TAPS	12.00	EACH				

NEW YORK CITY DEPARTMENT OF DESIGN AND CONSTRUCTION
DIVISION OF INFRASTRUCTURE - BUREAU OF DESIGN

PROJECT ID: QED1014
CONTRACT PIN: 8502016WM0005C

BID SCHEDULE FORM

COL. 1 SEQ. NO	COL. 2 ITEM NUMBER and DESCRIPTION	COL. 3 ENGINEER'S ESTIMATE OF QUANTITY	COL. 4 UNIT	COL. 5 UNIT PRICE (IN FIGURES) DOLLARS	CTS	COL. 6 EXTENDED AMOUNT (IN FIGURES) DOLLARS	CTS
113	**64.11ST** WITHDRAWING AND REPLACING HOUSE SERVICES USING SMALLER THAN 1-1/2-INCH SCREW TAPS	12.00	EACH				
114	**64.12COEG** CUTTING AND OFFSETTING HOUSE SERVICE WATER CONNECTIONS (EQUAL TO OR GREATER THAN 3-INCH DIAMETER)	12.00	L.F.				
115	**64.12COLT** CUTTING AND OFFSETTING HOUSE SERVICE WATER CONNECTIONS (LESS THAN 3-INCH DIAMETER)	12.00	L.F.				
116	**64.12ESEG** EXTENDING HOUSE SERVICE WATER CONNECTIONS (EQUAL TO OR GREATER THAN 3-INCH DIAMETER)	12.00	L.F.				
117	**64.12ESLT** EXTENDING HOUSE SERVICE WATER CONNECTIONS (LESS THAN 3-INCH DIAMETER)	12.00	L.F.				
118	**64.13WC08** FURNISHING, DELIVERING AND INSTALLING WET CONNECTION SLEEVE ON 8-INCH WATER MAIN PIPE WITH VARIOUS OUTLETS	3.00	EACH				

BID SCHEDULE FORM

COL. 1 SEQ. NO	COL. 2 ITEM NUMBER and DESCRIPTION	COL. 3 ENGINEER'S ESTIMATE OF QUANTITY	COL. 4 UNIT	COL. 5 UNIT PRICE (IN FIGURES) DOLLARS	CTS	COL. 6 EXTENDED AMOUNT (IN FIGURES) DOLLARS	CTS
119	**64.13WC12** FURNISHING, DELIVERING AND INSTALLING WET CONNECTION SLEEVE ON 12-INCH WATER MAIN PIPE WITH VARIOUS OUTLETS	5.00	EACH				
120	**64.13WC20** FURNISHING, DELIVERING AND INSTALLING WET CONNECTION SLEEVE ON 20-INCH WATER MAIN PIPE WITH VARIOUS OUTLETS	5.00	EACH				
121	**65.11BR** FURNISHING, DELIVERING AND INSTALLING BANDS, RODS, WASHERS, ETC., COMPLETE, FOR RESTRAINING JOINTS	225.00	LBS.				
122	**65.21PS** FURNISHING AND PLACING POLYETHYLENE SLEEVE **Unit price bid shall not be less than: $ 0.50**	770.00	L.F.				
123	**65.31FF** FURNISHING, DELIVERING AND PLACING FILTER FABRIC **Unit price bid shall not be less than: $ 0.10**	35,050.00	S.F.				
124	**65.41PS06** FURNISHING, DELIVERING AND INSTALLING 6-INCH PIPE-TO-WALL PENETRATION SEAL, INCLUDING STEEL SLEEVE AND ANCHOR/WATER STOP PLATE	18.00	EACH				

NEW YORK CITY DEPARTMENT OF DESIGN AND CONSTRUCTION
DIVISION OF INFRASTRUCTURE - BUREAU OF DESIGN

PROJECT ID: QED1014
CONTRACT PIN: 8502016WM0005C

BID SCHEDULE FORM

COL. 1 SEQ. NO	COL. 2 ITEM NUMBER and DESCRIPTION	COL. 3 ENGINEER'S ESTIMATE OF QUANTITY	COL. 4 UNIT	COL. 5 UNIT PRICE (IN FIGURES) DOLLARS	CTS	COL. 6 EXTENDED AMOUNT (IN FIGURES) DOLLARS	CTS
125	**65.41PS12** FURNISHING, DELIVERING AND INSTALLING 12-INCH PIPE-TO-WALL PENETRATION SEAL, INCLUDING STEEL SLEEVE AND ANCHOR/WATER STOP PLATE	2.00	EACH				
126	**65.41PS20** FURNISHING, DELIVERING AND INSTALLING 20-INCH PIPE-TO-WALL PENETRATION SEAL, INCLUDING STEEL SLEEVE AND ANCHOR/WATER STOP PLATE	2.00	EACH				
127	**65.41PS48** FURNISHING, DELIVERING AND INSTALLING 48-INCH PIPE-TO-WALL PENETRATION SEAL, INCLUDING STEEL SLEEVE AND ANCHOR/WATER STOP PLATE	9.00	EACH				
128	**65.41PS60** FURNISHING, DELIVERING AND INSTALLING 60-INCH PIPE-TO-WALL PENETRATION SEAL, INCLUDING STEEL SLEEVE AND ANCHOR/WATER STOP PLATE	2.00	EACH				
129	**65.41PS72** FURNISHING, DELIVERING AND INSTALLING 72-INCH PIPE-TO-WALL PENETRATION SEAL, INCLUDING STEEL SLEEVE AND ANCHOR/WATER STOP PLATE	4.00	EACH				

BID SCHEDULE FORM

COL. 1 SEQ. NO	COL. 2 ITEM NUMBER and DESCRIPTION	COL. 3 ENGINEER'S ESTIMATE OF QUANTITY	COL. 4 UNIT	COL. 5 UNIT PRICE (IN FIGURES) DOLLARS	CTS	COL. 6 EXTENDED AMOUNT (IN FIGURES) DOLLARS	CTS
130	**65.51PC** FURNISHING AND PLACING CAST-IN-PLACE CONCRETE CLASS 40 AND PRECAST CONCRETE CLASS 50	400.00	C.Y.				
131	**65.61SS** FURNISHING, DELIVERING AND PLACING STRUCTURAL, REINFORCING AND MISCELLANEOUS STEEL	40,000.00	LBS.				
132	**65.71SG** FURNISHING, DELIVERING AND PLACING SCREENED GRAVEL OR SCREENED BROKEN STONE BEDDING	325.00	C.Y.				
133	**67.11AA48** INCREMENTAL COST FOR ASBESTOS ABATEMENT WORK PERFORMED ON EXISTING 48-INCH DIAMETER STEEL PIPE WATER MAIN TO BE REMOVED, COMPLETE	100.00	L.F.				
134	**67.11AA60** INCREMENTAL COST FOR ASBESTOS ABATEMENT WORK PERFORMED ON EXISTING 60-INCH DIAMETER STEEL PIPE WATER MAIN TO BE REMOVED, COMPLETE	130.00	L.F.				

NEW YORK CITY DEPARTMENT OF DESIGN AND CONSTRUCTION
DIVISION OF INFRASTRUCTURE - BUREAU OF DESIGN

PROJECT ID: QED1014
CONTRACT PIN: 8502016WM0005C

BID SCHEDULE FORM

COL. 1 SEQ. NO	COL. 2 ITEM NUMBER and DESCRIPTION	COL. 3 ENGINEER'S ESTIMATE OF QUANTITY	COL. 4 UNIT	COL. 5 UNIT PRICE (IN FIGURES) DOLLARS	CTS	COL. 6 EXTENDED AMOUNT (IN FIGURES) DOLLARS	CTS
135	**67.11AA72** INCREMENTAL COST FOR ASBESTOS ABATEMENT WORK PERFORMED ON EXISTING 72-INCH DIAMETER STEEL PIPE WATER MAIN TO BE REMOVED, COMPLETE	40.00	L.F.				
136	**7.13 B** MAINTENANCE OF SITE **Unit price bid shall not be less than: $ 8,000.00**	24.00	MONTH				
137	**7.36** PEDESTRIAN STEEL BARRICADES	8,845.00	L.F.				
138	**7.88 AA** RODENT INFESTATION SURVEY AND MONITORING **Unit price bid shall not be less than: $ 40,000.00**	1.00	L.S.				
139	**7.88 AB** RODENT BAIT STATIONS **Unit price bid shall not be less than: $ 60.00**	410.00	EACH				
140	**7.88 AC** BAITING OF RODENT BAIT STATIONS **Unit price bid shall not be less than: $ 9.50**	410.00	EACH				

NEW YORK CITY DEPARTMENT OF DESIGN AND CONSTRUCTION
DIVISION OF INFRASTRUCTURE - BUREAU OF DESIGN

PROJECT ID: QED1014
CONTRACT PIN: 8502016WM0005C

BID SCHEDULE FORM

COL. 1 SEQ. NO	COL. 2 ITEM NUMBER and DESCRIPTION	COL. 3 ENGINEER'S ESTIMATE OF QUANTITY	COL. 4 UNIT	COL. 5 UNIT PRICE (IN FIGURES) DOLLARS	CTS	COL. 6 EXTENDED AMOUNT (IN FIGURES) DOLLARS	CTS
141	**7.88 AD** WATERBUG BAIT APPLICATIONS **Unit price,bid shall not be less than: $ 65.00**	710.00	BLOCK				
142	**70.21DK** DECKING	3,800.00	S.Y.				
143	**70.31FN** FENCING **Unit price bid shall not be less than: $ 2.00**	6,850.00	L.F.				
144	**70.51EO** EXCAVATION OF BOULDERS IN OPEN CUT **Unit price bid shall not be less than: $ 75.00**	60.00	C.Y.				
145	**70.61RE** ROCK EXCAVATION	510.00	C.Y.				
146	**70.71SB** STONE BALLAST **Unit price bid shall not be less than: $ 15.00**	10.00	C.Y.				

NEW YORK CITY DEPARTMENT OF DESIGN AND CONSTRUCTION
DIVISION OF INFRASTRUCTURE - BUREAU OF DESIGN

PROJECT ID: QED1014
CONTRACT PIN: 8502016WM0005C

BID SCHEDULE FORM

COL. 1 SEQ. NO	COL. 2 ITEM NUMBER and DESCRIPTION	COL. 3 ENGINEER'S ESTIMATE OF QUANTITY	COL. 4 UNIT	COL. 5 UNIT PRICE (IN FIGURES) DOLLARS	CTS.	COL. 6 EXTENDED AMOUNT (IN FIGURES) DOLLARS	CTS.
147	**70.81CB** CLEAN BACKFILL **Unit price bid shall not be less than: $ 15.00**	1,150.00	C.Y.				
148	**70.91SW12** FURNISHING AND PLACING SHEETING AND BRACING IN TRENCH FOR WATER MAIN PIPE 12-INCH IN DIAMETER AND LESS	4,000.00	S.F.				
149	**70.91SW20** FURNISHING AND PLACING SHEETING AND BRACING IN TRENCH FOR WATER MAIN PIPE 20-INCH IN DIAMETER	1,450.00	S.F.				
150	**73.11AB** ADDITIONAL BRICK MASONRY **Unit price bid shall not be less than: $ 62.50**	15.00	C.Y.				
151	**73.21AC** ADDITIONAL CONCRETE **Unit price bid shall not be less than: $ 62.50**	42.00	C.Y.				
152	**73.31AE0** ADDITIONAL EARTH EXCAVATION INCLUDING TEST PITS (ALL DEPTHS) **Unit price bid shall not be less than: $ 20.00**	130.00	C.Y.				

BID SCHEDULE FORM

COL. 1 SEQ. NO	COL. 2 ITEM NUMBER and DESCRIPTION	COL. 3 ENGINEER'S ESTIMATE OF QUANTITY	COL. 4 UNIT	COL. 5 UNIT PRICE (IN FIGURES) DOLLARS	CTS	COL. 6 EXTENDED AMOUNT (IN FIGURES) DOLLARS	CTS
153	73.41AG ADDITIONAL SELECT GRANULAR BACKFILL **Unit price bid shall not be less than: $ 15.00**	126.00	C.Y.				
154	73.51AS ADDITIONAL STEEL REINFORCING BARS **Unit price bid shall not be less than: $ 1.00**	100.00	LBS.				
155	76.11CR CONSTRUCTION REPORT	1.00	L.S.				
156	76.21MR MONITORING AND POST-CONSTRUCTION REPORT	1.00	L.S.				
157	79.11AATA ALLOWANCE FOR ASBESTOS ABATEMENT WORK PERFORMED ON EXISTING TRANSIT AUTHORITY DUCT INSULATION (REMOVAL OF ACM, REPLACEMENT WITH NON-ACM, AND SUPPORT AND PROTECTION OF EXISTING TRANSIT AUTHORITY DUCT, COMPLETE) **PRICE BID SHALL BE FOR THE FIXED SUM OF $ 4,500.00**	1.00	F.S.	4,500	00	$4,500	00

NEW YORK CITY DEPARTMENT OF DESIGN AND CONSTRUCTION
DIVISION OF INFRASTRUCTURE - BUREAU OF DESIGN

PROJECT ID: QED1014
CONTRACT PIN: 8502016WM0005C

BID SCHEDULE FORM

COL 1 SEQ. NO	COL 2 ITEM NUMBER and DESCRIPTION	COL 3 ENGINEER'S ESTIMATE OF QUANTITY	COL 4 UNIT	COL 5 UNIT PRICE (IN FIGURES) DOLLARS	CTS	COL 6 EXTENDED AMOUNT (IN FIGURES) DOLLARS	CTS
158	8.01 C1 HANDLING, TRANSPORTING AND DISPOSAL OF NON-HAZARDOUS CONTAMINATED SOIL	6,000.00	TONS				
159	8.01 C2 SAMPLING AND TESTING OF CONTAMINATED/POTENTIALLY HAZARDOUS SOIL FOR DISPOSAL PURPOSES	15.00	SETS				
160	8.01 H HANDLING, TRANSPORTING AND DISPOSAL OF HAZARDOUS SOIL	100.00	TONS				
161	8.01 S HEALTH AND SAFETY	1.00	L.S.				
162	8.01 W1 REMOVAL, TREATMENT, AND DISCHARGE/DISPOSAL OF CONTAMINATED WATER	7.00	DAY				
163	8.01 W2 SAMPLING AND TESTING OF CONTAMINATED WATER	2.00	SETS				

BID SCHEDULE FORM

COL. 1 SEQ. NO	COL. 2 ITEM NUMBER and DESCRIPTION	COL. 3 ENGINEER'S ESTIMATE OF QUANTITY	COL. 4 UNIT	COL. 5 UNIT PRICE (IN FIGURES) DOLLARS	CTS	COL. 6 EXTENDED AMOUNT (IN FIGURES) DOLLARS	CTS
164	8.08 VARIABLE MESSAGE BOARD	4.00	EACH				
165	9.04 HW ALLOWANCE FOR ANTI-FREEZE ADDITIVE IN CONCRETE PRICE BID SHALL BE FOR THE FIXED SUM OF $ 7,000.00	1.00	F.S.	7,000	00	$7,000	00
166	9.99 FLASHING ARROW BOARD	7.00	EACH				
167	T-1.20 REMOVE TYPE "M" SERIES FOUNDATION	3.00	EACH				
168	T-1.3 INSTALL TYPE "M2-5S" FOUNDATION	3.00	EACH				

NEW YORK CITY DEPARTMENT OF DESIGN AND CONSTRUCTION
DIVISION OF INFRASTRUCTURE - BUREAU OF DESIGN

PROJECT ID: QED1014
CONTRACT PIN: 8502016WM0005C

BID SCHEDULE FORM

COL. 1 SEQ. NO	COL. 2 ITEM NUMBER and DESCRIPTION	COL. 3 ENGINEER'S ESTIMATE OF QUANTITY	COL. 4 UNIT	COL. 5 UNIT PRICE (IN FIGURES) DOLLARS	CTS	COL. 6 EXTENDED AMOUNT (IN FIGURES) DOLLARS	CTS
169	T-2.24 REMOVE TYPE "M" SERIES POST	3.00	EACH				
170	T-2.28 REMOVE MAST ARM FROM ANY POST	1.00	EACH				
171	T-2.32 INSTALL STREET LIGHT LUMINAIRE SUPPORT ARM ON "M-2" POST	1.00	EACH				
172	T-2.4 INSTALL TYPE "M-2" POST	3.00	EACH				
173	T-20220 c) FURNISH 1-1/4" ANCHOR BOLT ASSEMBLIES FOR M-2 (EACH) (4 REQUIRED PER POST)	12.00	EACH				
174	T-3.1 INSTALL "ONE-WAY" SIGNAL UNIT ON MAST ARM OR TOP OF TRAFFIC POST	9.00	EACH				

NEW YORK CITY DEPARTMENT OF DESIGN AND CONSTRUCTION
DIVISION OF INFRASTRUCTURE - BUREAU OF DESIGN

PROJECT ID: QED1014
CONTRACT PIN: 8502016WM0005C

BID SCHEDULE FORM

COL. 1 SEQ. NO	COL. 2 ITEM NUMBER and DESCRIPTION	COL. 3 ENGINEER'S ESTIMATE OF QUANTITY	COL. 4 UNIT	COL. 5 UNIT PRICE (IN FIGURES) DOLLARS	CTS	COL. 6 EXTENDED AMOUNT (IN FIGURES) DOLLARS	CTS
175	T-3.12 FURNISH AND INSTALL LOUVERS ON SIGNAL UNIT	1.00	EACH				
176	T-3.18 REMOVE SIGNAL HEAD FROM ANY TYPE POST	3.00	EACH				
177	T-3.21 REMOVE PEDESTRIAN SIGNAL OR SIGN UNIT OR OTHER ILLUMINATED SIGNS FROM ANY POST	6.00	EACH				
178	T-3.6 INSTALL PEDESTRIAN SIGNAL ON ANY TYPE POST	6.00	EACH				
179	T-30013L FURNISH ADJUSTABLE 3 SECTION 1-WAY, DIE CAST ALUMINUM TRAFFIC SIGNALS 8" - W/LED LENS	9.00	EACH				
180	T-31210 h) "HUB" ASSEMBLY *ASSEMBLY IS EQUAL TO ONE PAIR	3.00	EACH				

NEW YORK CITY DEPARTMENT OF DESIGN AND CONSTRUCTION
DIVISION OF INFRASTRUCTURE - BUREAU OF DESIGN

PROJECT ID: QED1014
CONTRACT PIN: 8502016WM0005C

BID SCHEDULE FORM

COL 1 SEQ. NO	COL 2 ITEM NUMBER and DESCRIPTION	COL 3 ENGINEER'S ESTIMATE OF QUANTITY	COL 4 UNIT	COL 5 UNIT PRICE (IN FIGURES) DOLLARS	CTS	COL 6 EXTENDED AMOUNT (IN FIGURES) DOLLARS	CTS
181	T-31225 c) "3MS"	3.00	EACH				
182	T-31351 g) "VB-2P" ASSEMBLY *ASSEMBLY IS EQUAL TO ONE PAIR	3.00	EACH				
183	T-33000L FURNISH POLYCARBONATE INCANDESCENT PED SIGNAL W/LED LENS	4.00	EACH				
184	T-33001-L FURNISH POLYCARBONATE PEDESTRIAN SIGNAL (16 X 16) W/LED COUNT LENS (SPECIFICATION A-L)	2.00	EACH				
185	T-4.22 INSTALL ANY TYPE OF ADVANCED SOLID STATE TRAFFIC SIGNAL CONTROLLER AND CABINET ON METAL POLE	1.00	EACH				
186	T-4.8 REMOVE ONE CONTROL BOX AND CONTROLLER FROM ANY POST OR SUPPORT	1.00	EACH				

BID SCHEDULE FORM

COL. 1 SEQ. NO	COL. 2 ITEM NUMBER and DESCRIPTION	COL. 3 ENGINEER'S ESTIMATE OF QUANTITY	COL. 4 UNIT	COL. 5 UNIT PRICE (IN FIGURES) DOLLARS	CTS	COL. 6 EXTENDED AMOUNT (IN FIGURES) DOLLARS	CTS
187	T-5.1 FURNISH AND INSTALL 2" RIGID UNDERGROUND CONDUIT IN UNPAVED ROADWAY	50.00	L.F.				
188	T-5.2 FURNISH AND INSTALL 2" RIGID UNDERGROUND CONDUIT IN PAVED ROADWAY	200.00	L.F.				
189	T-5.32 RESTORING PERMANENT ROADWAY (INCLUDING SAWCUT)	200.00	L.F.				
190	T-5.7 FURNISH AND INSTALL ADDITIONAL 2" RIGID UNDERGROUND CONDUIT	20.00	L.F.				
191	T-6.1 INSTALL CABLE (INCLUDES OVERHEAD)	1,000.00	L.F.				
192	T-6.10 REMOVE CABLE (INCLUDES OVERHEAD)	1,400.00	L.F.				

NEW YORK CITY DEPARTMENT OF DESIGN AND CONSTRUCTION
DIVISION OF INFRASTRUCTURE - BUREAU OF DESIGN

PROJECT ID: QED1014
CONTRACT PIN: 8502016WM0005C

BID SCHEDULE FORM

COL. 1 SEQ. NO	COL. 2 ITEM NUMBER and DESCRIPTION	COL. 3 ENGINEER'S ESTIMATE OF QUANTITY	COL. 4 UNIT	COL. 5 UNIT PRICE (IN FIGURES) DOLLARS	CTS	COL. 6 EXTENDED AMOUNT (IN FIGURES) DOLLARS	CTS
193	**T-6.2** INSTALL MULTIPLE CABLE (INCLUDES OVERHEAD)	1,400.00	L.F.				
194	**T-60000B** FURNISH 2 c # 10B (BREAKDOWN = 2#10 WITH 3RD WIRE FOR GROUNDING).	1,500.00	L.F.				
195	**T-60040** c) 7 CONDUCTOR, 14 A.W.G.	800.00	L.F.				
196	**T-60190** e) 13 CONDUCTOR, 14 A.W.G.	1,800.00	L.F.				
197	**T-7.14** INSTALL PEDESTRIAN PUSHBUTTON AND PUSHBUTTON SIGN ON ANY POST	1.00	EACH				
198	**T-7.45** REMOVE PEDESTRIAN PUSHBUTTON AND PUSHBUTTON SIGN	1.00	EACH				

NEW YORK CITY DEPARTMENT OF DESIGN AND CONSTRUCTION
DIVISION OF INFRASTRUCTURE - BUREAU OF DESIGN

PROJECT ID: QED1014
CONTRACT PIN: 8502016WM0005C

BID SCHEDULE FORM

COL. 1 SEQ. NO	COL. 2 ITEM NUMBER and DESCRIPTION	COL. 3 ENGINEER'S ESTIMATE OF QUANTITY	COL. 4 UNIT	COL. 5 UNIT PRICE (IN FIGURES) DOLLARS	CTS	COL. 6 EXTENDED AMOUNT (IN FIGURES) DOLLARS	CTS
199	**T-8.10** RELOCATE CONCRETE PYLON WITH POST	3.00	EACH				
200	**T-8.8** INSTALL CONCRETE PYLON	3.00	EACH				
201	**T-8.9** REMOVE CONCRETE PYLON	3.00	EACH				
202	**T-81000** FURNISH CONCRETE PYLON	3.00	EACH				
203	**UTL-6.01.1** GAS MAIN CROSSING SEWER UP TO 24" IN DIAMETER (S6.01) **Unit price bid shall not be less than: $ 1,040.00**	4.00	EACH				
204	**UTL-6.01.12** GAS MAIN CROSSING WATER MAIN 48" THRU 54" IN DIAMETER (S6.01) **Unit price bid shall not be less than: $ 810.00**	6.00	EACH				

NEW YORK CITY DEPARTMENT OF DESIGN AND CONSTRUCTION
DIVISION OF INFRASTRUCTURE - BUREAU OF DESIGN

PROJECT ID: QED1014
CONTRACT PIN: 8502016WM0005C

BID SCHEDULE FORM

COL. 1 SEQ. NO	COL. 2 ITEM NUMBER and DESCRIPTION	COL. 3 ENGINEER'S ESTIMATE OF QUANTITY	COL. 4 UNIT	COL. 5 UNIT PRICE (IN FIGURES) DOLLARS	CTS	COL. 6 EXTENDED AMOUNT (IN FIGURES) DOLLARS	CTS
205	**UTL-6.01.8** GAS SERVICES CROSSING TRENCHES AND/OR EXCAVATIONS (S6.01) **Unit price bid shall not be less than: $ 465.00**	5.00	EACH				
206	**UTL-6.02** EXTRA EXCAVATION FOR THE INSTALLATION OF CATCH BASIN SEWER DRAIN PIPES WITH GAS INTERFERENCES (S6.02) **Unit price bid shall not be less than: $ 715.00**	4.00	EACH				
207	**UTL-6.03** REMOVAL OF ABANDONED GAS FACILITIES. ALL SIZES. (S6.03) **Unit price bid shall not be less than: $ 15.00**	370.00	L.F.				
208	**UTL-6.03.1A** REMOVAL OF ABANDONED GAS FACILITIES WITH POSSIBLE COAL TAR WRAP. ALL SIZES. (FOR CON EDISON WORK ONLY) (S6.03) **Unit price bid shall not be less than: $ 25.00**	50.00	L.F.				
209	**UTL-6.04** ADJUST HARDWARE TO GRADE USING SPACER RINGS/ADAPTORS. (STREET REPAVING.) (S6.04) **Unit price bid shall not be less than: $ 35.00**	5.00	EACH				
210	**UTL-6.05** ADJUST HARDWARE TO GRADE BY RESETTING. (ROAD RECONSTRUCTION.) (S6.05) **Unit price bid shall not be less than: $ 65.00**	5.00	EACH				

NEW YORK CITY DEPARTMENT OF DESIGN AND CONSTRUCTION
DIVISION OF INFRASTRUCTURE - BUREAU OF DESIGN

PROJECT ID: QED1014
CONTRACT PIN: 8502016WM0005C

BID SCHEDULE FORM

COL. 1 SEQ. NO	COL. 2 ITEM NUMBER and DESCRIPTION	COL. 3 ENGINEER'S ESTIMATE OF QUANTITY	COL. 4 UNIT	COL. 5 UNIT PRICE (IN FIGURES) DOLLARS	CTS	COL. 6 EXTENDED AMOUNT (IN FIGURES) DOLLARS	CTS
211	UTL-6.06 SPECIAL CARE EXCAVATION AND BACKFILLING (S6.06) **Unit price bid shall not be less than: $ 180.00**	100.00	C.Y.				
212	UTL-6.07 TEST PITS FOR GAS FACILITIES (S6.07) **Unit price bid shall not be less than: $ 100.00**	40.00	C.Y.				
213	UTL-GCS-2WS GAS INTERFERENCES AND ACCOMMODATIONS **PRICE BID SHALL BE FOR THE FIXED SUM OF $ 50,000.00**	1.00	F.S.	50,000	00	$50,000	00

SUB-TOTAL: $ _____

214	6.39 A MOBILIZATION **BID PRICE OF MOBILIZATION SHALL NOT EXCEED 4% OF THE ABOVE SUB-TOTAL PRICE.**	1.00	L.S.				

NEW YORK CITY DEPARTMENT OF DESIGN AND CONSTRUCTION
DIVISION OF INFRASTRUCTURE - BUREAU OF DESIGN

PROJECT ID: QED1014
CONTRACT PIN: 8502016WM0005C

BID SCHEDULE FORM

COL. 1	COL. 2	COL. 3	COL. 4	COL. 5		COL. 6	
		ENGINEER'S ESTIMATE		UNIT PRICE (IN FIGURES)		EXTENDED AMOUNT (IN FIGURES)	
SEQ. NO.	ITEM NUMBER and DESCRIPTION	OF QUANTITY	UNIT	DOLLARS	CTS	DOLLARS	CTS

TOTAL BID PRICE: $ _____

PLEASE BE SURE A LEGIBLE BID IS ENTERED FOR EACH ITEM.
THE BIDDER SHALL INSERT THE TOTAL BID PRICE IN
THE BID FORM ON PAGE C-4 OF THIS BID BOOKLET.

Tax ID #: _____

APT E-PIN #: 85016B0110

SCHEDULE B – M/WBE Utilization Plan
Part I: M/WBE Participation Goals

Part I to be completed by contracting agency

Contract Overview

APT E- Pin #	85016B0110	**FMS Project ID#:**	QED-1014
Project Title/ Agency PIN #	REHABILITATION OF EXISTING TRUNK WATER MAINS / 8502016WM0005C		
Bid/Proposal Response Date	JUNE 2, 2016		
Contracting Agency	Department of Design and Construction		
Agency Address	30-30 Thomson Avenue **City** Long Island City **State** NY **Zip Code** 11101		
Contact Person	Lea Case	**Title**	MWBE Liaison & Compliance Analyst
Telephone #	(718) 391-1003	**Email**	casele@ddc.nyc.gov

Project Description *(attach additional pages if necessary)*

PROJECT ID: QED1014

REHABILITATION OF EXISTING TRUNK WATER MAINS IN CRESCENT STREET FROM 34TH AVENUE TO 31ST AVENUE; 31ST AVENUE FROM CRESCENT STREET TO 41ST STREET; AND 41ST STREET FROM 31ST AVENUE TO 25TH AVENUE

INCLUDING DISTRIBUTION WATER MAIN, SEWER AND TRAFFIC SIGNAL WORK

Together With All Work Incidental Thereto
BOROUGH OF QUEENS
CITY OF NEW YORK

M/WBE Participation Goals for Services
Enter the percentage amount for each group or for an unspecified goal. Please note that there are no goals for Asian Americans in Professional Services.

Prime Contract Industry: Construction

Group	Percentage	
Unspecified*	9%	
or		
Black American	UNSPECIFIED*	
Hispanic American	UNSPECIFIED*	
Asian American	UNSPECIFIED*	
Women	UNSPECIFIED*	
Total Participation Goals	9%	Line 1

**Note: For this procurement, individual ethnicity and gender goals are not specified. The Total Participation Goal for construction contracts may be met by using either Black-American, Hispanic-American, Asian American, or Women certified firms or any combination of such firms.*

NYC DDC QED 1014
CP System Survey and Engineering Study of Soils and Stray Currents Cathodic Protection System Design

Prepared For:

NYC Department of Design and Construction
30-30 Thomson Ave
Long Island City, NY 11101

Prepared By:

CorrTech, Inc.
25 South Street
Hopkinton, MA 01748
CorrTech, Inc. Report No. 8284-4681
NYC DDC Task Order 023

May 2016

STATEMENT OF LIMITATION

The conclusions presented in this document are based on the services described and not on tasks or procedures beyond the scope of the described procedures or the time and budgetary constraints imposed by the contract limitations.

CorrTech, Inc. has performed this assessment in a professional manner using that degree of skill and care exercised for similar projects under similar conditions by reputable and competent consultants, and in accordance with the procedures established within CorrTech's quality assurance, quality control protocol.

CorrTech, Inc. shall not be responsible for conditions or consequences arising from relevant facts that were concealed, withheld or not fully disclosed at the time the evaluation was performed.

CORROSION NACE SCOTT H. PAUL 4163 SPECIALIST

Report Reviewed by:
Scott Paul, P.E.
NACE Corrosion Specialist No. 4163
May 2016

Report Prepared by:
Ted Midura, P.E.
NACE Cathodic Protection Technician No. 31210

Table of Contents

INTRODUCTION

On June 28th, 2011, CorrTech, Inc. entered into agreement with the NYC Department of Design and Construction with the expectation of providing cathodic protection design, construction support, field testing, final system testing, and as-built documentation. The QED 1014 project is located in Queens, New York, along Crescent St, 31st Ave, and 41st St. It is estimated that approximately 7993 linear feet of 52-in steel pipe and associated fittings are to be installed under this contract. Approximately 6,902-ft of pipe is being slip line inserted and 1,091-ft is direct bury pipe. Approximately 65-ft of 48-in; 158-ft of 72-in; and 50-ft of 20-in piping is also to be installed as part of this system. These segments of pipe, isolated at all ends, will be protected by a cathodic protection system designed by CorrTech. Work is being completed under CorrTech, Inc. Job No. 8284, Task 023, and issued under contract GEDRC001, registration number 20121401831.

Field testing was performed on May 3, 2016 in order to obtain soil resistivity data and to perform stray current monitoring in the approximate areas in which the new steel water main is to be installed. During this visit, testing was completed in specific areas associated with the route of the new piping system. Data collected has been used to design the sacrificial cathodic protection system. In addition to the field testing, a cursory review of area utilities was completed.

CorrTech, Inc. provides corrosion engineering expertise in accordance with specifications section 5.04A. Furnishing, installing and testing corrosion control and/or cathodic protection System was done in accordance with New York City Department of Environmental Protection (NYCDEP) "Specifications for Trunk Main Work".[1]

CONCLUSION

Based on the field testing protocol and test results obtained during the system evaluation and energization, the following conclusions are presented:

1. The average soil resistivity measured along the construction route was found to be approximately 11,607 ohm-cm. Measured values ranged from 2,000 ohm-cm to 24,000 ohm-cm. The soil resistivity study indicates that the area soils are classified as mildly less corrosive to metallic structures. Steel piping installed in this area will require corrosion control measures that will include a bonded polyurethane external dielectric coating system, host pipe grouting and sacrificial anode cathodic protection that will provide adequate corrosion control for in excess of 90 years.

2. Stray current effects measured along the construction route are considered to be significant. The magnitude of variations observed near the rail crossing, clearly indicates the existence of dynamic stray DC voltage effects.

[1] This publication includes "Special Provisions for Trunk Main Work"; and "Specification for Furnishing, Delivering and Laying Steel Pipe and Appurtenances".

RECOMMENDATIONS

While the soils in the area are considered mildly corrosive, the effect of dynamic stray current and minimum life expectancy of 50 years must be considered. In order to protect against passive corrosion and active corrosion caused by stray current, the newly installed steel pipe should be installed with an external coating system, electrical isolation, and sacrificial anode type cathodic protection system. The following are required for the system to function as designed:

1. Flange isolation assemblies are required where the new steel pipe connects to existing piping. Insulating flanges must also be installed at all butterfly valve chambers and at any/all ductile iron or cast iron main connections. These have been indicated on the design drawings

2. The new steel piping must have a high quality dielectric coating, such as the polyurethane coating system, for any and all steel pipe surfaces that are in contact with the surrounding soil and host pipe grout environment. The dielectric coating system should be applied to all piping associated with the air cock hydrants and blow-off assemblies.

3. Sacrificial magnesium anodes, permanent reference electrodes, pipe test wires, steel counter electrodes and flush-to-grade test stations at the locations indicated on the design drawings must be installed adjacent to the direct-buried piping, as per design drawings. All test stations must be installed on the inside of nearby curbs in order to prevent the enclosures from being subject to vehicular traffic and to make them easier to locate for future testing.

4. FRP shields must be installed around the pipe at any/all points of contact with reinforced concrete piles or similar structures. Electrical isolation between the new steel piping and other structures is of critical importance.

5. Casing spacers shall be utilized to provide dielectric separation between the existing 60-in lock bar steel host pipe and new 52-in insertion slip line pipe.

6. Electrical isolation must be monitored during installation. Any values less than 500-ohms shall be resolved before proceeding with additional pipe slip lining.

7. Final testing shall be performed by CorrTech personnel in concert with the REI team. Testing must verify that the installed cathodic protection system meets the criteria set forth by NACE International Standard Practice SP0169, which requires control of external corrosion on underground or submerged metallic piping systems at all locations.

8. Based on the cathodic protection design worksheets and pipe network, the following table summarizes the direct-buried pipe segments for QED 1014:

Pipe Segment	Location and Description	No of Anodes	No of Anode Test Stations
1	CRESCENT ST BETWEEN 34TH AVE AND 33RD AVE	7	1
2	CRESCENT ST BETWEEN 33RD AVE AND BROADWAY	7	1
3	CRESCENT ST AND 31ST ROAD	10	1
4	CRESCENT ST BETWEEN 31ST ROAD AND 31ST AVE	13	1
5	CORNER OF CRESCENT ST AND 31ST AVE	45	1
6	31ST AVE BETWEEN 29TH ST AND 30TH ST	10	1
7A	31ST AVE BETWEEN 30TH ST AND 31ST ST	12	1
7B	31ST AVE BETWEEN 30TH ST AND 31ST ST	12	1
8	31ST AVE BETWEEN 31ST ST AND 32ND ST	6	1
9	31ST AVE BETWEEN 32ND ST AND 33RD ST	10	1
10	31ST AVE BETWEEN 35TH ST AND 36TH ST	10	1
11	31ST AVE BETWEEN 37TH ST AND 38TH ST	5	1
12	31ST AVE BETWEEN STEINWAY ST AND 41ST ST	10	1
13	CORNER OF 31ST AVE AND 41ST ST	30	1
14A	41ST ST BETWEEN NEWTOWN RD AND 30TH AVE	14	1
14B	41ST ST BETWEEN NEWTOWN RD AND 30TH AVE	14	1
15	41ST ST AT 28TH AVE	15	1
16	41ST ST BETWEEN 28TH AVE AND 25TH AVE	10	1
17	41ST ST AT 25TH AVE	40	1
18	41ST ST AT 25TH AVE	8	1
19	41ST ST AT 25TH AVE	4	1
	TOTAL	**292**	**21**

DISCUSSION

The coated steel water main piping associated with project QED 1014 consists of 52-inch slip line, and open trench steel water main. Testing was completed in and around Crescent Street, 31st Ave, and 41st St, following the layout of the piping system.

The purpose of the pre-constructing testing and subsequent evaluation is to quantify the levels of stray traction DC currents and to evaluate the area soil resistivity along the proposed construction route. Stray current testing was performed in and around the area where the new pipe will be installed. Significant stray current effects were measured near the MTA subway tracks crossing 31st Ave.

A reference cell-to-reference cell potential profile obtained in the area indicates that potential variations are considered significant as well. The potential measurements obtained indicated variations of approximately 0.135-volts or less (as monitored over a 30-minute period). The proposed area of construction for the new steel water main being installed as part of QED 1014 will be subjected to adverse effects from stray traction DC currents. Mitigation techniques employed in this design include a dielectric coating of the pipe, the use of galvanic anodes for corrosion protection, proper isolation of the piping segments subjected to the stray current, and isolation of the 52-in carrier piping from the 60-in casing achieved by means of dielectric casing spacers.

Soil resistivity measurements were obtained at fourteen (14) locations using a Collins Rod and calibrated Wheatstone Bridge. Depths obtained ranged from 3-feet to 4-feet. The data obtained is shown in Appendix I of this report. Soil resistivity ranged from a low of 2k ohm-cm to a high of 24k ohm-cm. Low resistivity areas were measured at locations that are likely subject to accumulation of road salt, among other contaminants. The mean soil resistivity is approximately 11.6k Ω-cm. This is a reasonable representation of the average soil resistivity in this area.

Only a small portion of the piping will be in contact with the soil directly. The majority of the piping will be inside the host pipe and surrounded by concrete grout.

The measurement of soil resistivity has been used for years as an indicator of the corrosivity of soil. Soil resistivity is the reciprocal of conductivity; the lower the resistivity, the easier current flows through the soil. Of the measurable soil characteristics, resistivity is generally accepted as the primary indicator of soil corrosivity. Resistivity is a property of the bulk volume of soil and electrolytes.

Although no universal standard has been accepted, (by an organization such as the American Society for Testing and Materials or the National Association of Corrosion Engineers), it is generally agreed that the classification shown below, or other similar classifications, reflect soil corrosivity.

Resistivity (Ohm-Cm)	Classification
< 1,000	Extremely Corrosive
1,000 to 3,000	Highly Corrosive
3,000 to 5,000	Corrosive
5,000 to 10,000	Moderately Corrosive
10,000 to 25,000	Mildly Corrosive
> 25,000	Progressively Less Corrosive

The above table provides qualitative insight to the expected corrosion exposure of a metallic structure in a soil of known resistivity. Accordingly, deterioration can generally be expected to be rapid and relatively severe in soils below 1,000 ohm-cm. This does not mean, however, that severe corrosion will not occur in soils of higher resistivity. In fact, depending on chemical conditions, severe corrosion can occur in soils above 25,000 ohm-cm. The table only indicates that the latter occurrence is generally not observed.

The review of the plans for the new steel water main indicates that there are multiple ties to existing structures. The installation of insulating flanges is required for any/all tie-ins to the existing water supply network, as well as any butterfly valve connections and at any/all ductile iron or cast iron distribution tie-in points. The installation of electrical isolation flange assemblies produces a more concise, manageable cathodic protection system.

The cathodic protection design created by CorrTech, Inc. assumes that the piping will be electrically isolated and provided with a high quality dielectric coating system, (such as the polyurethane coating system) and installed on all steel piping in contact with the soil environment. The piping associated with air cock hydrants and blow-offs should be coated with this coating system as well as electrically isolated from the steel trunk water main. There will be a total of 18 distinct segments associated with the QED 1014 project installation relative to cathodic protection. Please refer to Appendix II for the associated Ground Bed Design Worksheets.

SLIP-LINING

Slip lining has provided a viable option for trenchless pipe rehabilitation for years. This technique involves the insertion of a new pipe into an existing pipe. A new pipe with an outside dimension smaller than the inside dimension of the host pipe is either pulled or pushed into the host pipe. The ideal host pipe for slip lining are straight with no deformities, that is pipes with no or modest bends, no severe protrusions into the pipe, and only modest offset joints. Slip lining may be continuous or segmental. This project involves the insertion of a 52-in diameter, ½-in thick polyurethane coated and lined steel pipe into a 60-in lock bar riveted steel host pipe.

Casing spacers shall be utilized to provide dielectric separation between the existing 60-in lock bar steel host pipe and new 52-in insertion slip line pipe. In addition, the new pipe shall be coated with polyurethane coating on the external surface of the pipe and provided with sacrificial anode cathodic protection in the direct buried sections of piping (insertion pits). Electrical separation is essential to facilitate corrosion control and function of the sacrificial anode cathodic protection system.

Electrical isolation must be monitored during installation. For each of the sixteen individual insertion sections of slip lined pipe, the electrical resistance between the existing pipe and new slip line shall be measured every day. The measured resistance shall not be less than 500-ohms. The measurements shall be made in the presence of a resident inspector every day during pipe installation. Any values less than 500-ohms shall be resolved before proceeding with additional pipe slip lining.

To monitor the isolation of the 52-in piping from the 60-in piping after the installation is completed, casing test stations with reference cells and counter electrodes installed both inside and outside the casing annulus have been incorporated into the cathodic protection design.

DESIGN PARAMETERS

The following NYC DEP cathodic protection design criteria have been applied to facilitate the final design calculations:

- Percent of bare pipe 2.00%.
- Required current density 1.25 mA/ft² for direct buried piping.
- Pipe coating quality 25,000 ohm-cm
- 50-year design life for the cathodic protection anodes
- Anode consumption rate of 17-pounds per ampere-year
- 50% anode consumption utilization factor

For the segments of pipe inside the host pipe and encased in cementitious grout, the following design criteria have been applied:

- Percent of bare pipe 2.00%.
- Required current density 1 mA/ft².
- Pipe coating quality 25,000 ohm-cm
- 50-year design life for the cathodic protection anodes
- Anode consumption rate of 17-pounds per ampere-year
- 50% anode consumption utilization factor

The grout that will be used as fill between the new 52-in steel pipe and the existing 60-in steel host pipe has characteristics that differ greatly from the normal soil environment of direct buried pipe. Aside from the mechanical differences (higher yield; higher impermeability to moisture or air), the electrical and chemical qualities of the grout offer further corrosion protection. When fully set, the grout resistivity is extremely high (a typical value of 80,000 ohm-cm was used in this design). The grout is also more alkaline (pH close to 10) than what's normally encountered in soil, which is typically neutral with pH around 7. For steel, corrosion is inhibited in a more alkaline environment, and accelerated by a more acidic environment. The high resistivity combined with the high alkalinity of the grout inherently provides corrosion protection to the piping. This lowers the current requirement of the piping contacting the grout. A conservative value of 1mA/sqft was considered for the steel contacting the grout.

The magnesium anodes will be divided into groups and these groups will be distributed along the direct bury piping segments. Installing the anodes in individual groups enables current distribution to the 52-in piping in each segment, and provides multiple ground beds as backup in the event of damage to one groundbed.

The cathodic protection design has been prepared in accordance with NACE SP0169. NACE Standard Practice SP0169 (formerly RP0169), "Control of External Corrosion on Underground or Submerged Metallic Piping Systems". This standard practice presents procedures and practices for achieving effective control of external corrosion on buried or submerged metallic piping systems.

These recommendations are also applicable to many other buried or submerged metallic structures. They are intended for use by corrosion control personnel concerned with the corrosion of buried or submerged piping systems, including oil, gas, water, and similar structures. This standard describes the use of electrically insulating coatings, electrical isolation, and cathodic protection as external corrosion control methods. The standard contains specific provisions for the application of cathodic protection to existing bare, existing coated and to new piping systems. Also included are procedures for control of interference currents on pipelines.

Sacrificial anode cathodic protection provides protection with no external power source or rectifier. Sacrificial anodes are designed to corrode, thereby protecting the steel structure being installed. Energy for the sacrificial anode system is provided by the difference in the electrochemical level between the anode and the structure being protected. Typically, magnesium anodes are utilized to protect steel structures. The magnesium anode will corrode preferentially when connected to steel as part of a cathodic protection system. This is due to the fact that it sits at a higher electrochemical level.

A sacrificial anode installation is also a DC circuit with positive current supplied by the anodes and a return negative current supplied from the structure. The driving voltage of the sacrificial anode circuits is approximately 1.2 volt, the difference between magnesium and steel.

Ohm's Law (E=IR) is valid for DC circuits, where E is the driving voltage, or rectifier output, of the circuit, I is the resulting current magnitude and R is the resistance of the circuit. Proper system design seeks to minimize the resistance of the circuit through the use of an anode ground bed design. Sacrificial anode systems do not provide as much energy output as the impressed current design and therefore do not function properly in some applications where cathodic protection is required. Sacrificial systems require that the structure is first coated with a tightly adhered coating system and is also electrically isolated from all other metallic structures and system components. It is important to understand that pipe coating alone is not sufficient to provide complete corrosion control. Coatings must be supplemented with cathodic protection.[2]

NACE requirements specify that the cathodic protection of buried steel structures must be evidenced by two criteria. Firstly, adequate steel polarization is needed to ensure that the electrochemical processes have been established in order to arrest corrosion of the steel surface. Secondly, the cathodic protection design should be constructed and implemented in order to allow for field-testing protocol. Protection levels with respect to polarization criteria can then be verified. All testing is performed in order to demonstrate that adequate cathodic polarization exists on the protected structure. Polarization criteria must take into account any significant drop in the field measurements conducted. This is important both to satisfy the regulations as well as to ensure the preservation of pipe integrity. The primary focus of testing protocol and system design is to ensure that corrosion of any exposed steel has been mitigated.

[2] However, as defined in Sections 4 and 5 of NACE SP0169, cathodic protection can be provided to uncoated structures under certain conditions.

Sacrificial anode design utilizes a number of electrical parameters as input to the CorrTech, Inc. design calculation worksheet. The calculation worksheets for the total pipe section is included in this report as Appendix II.

In addition to the soil resistivity data, pipe geometry and anode dimensions and weight, the above design criteria are inputs to the design. The anode-to-remote earth resistance calculation is based on Dwight's Equation for a single horizontal anode.

$$R = \left(\frac{0.00521\rho}{L}\right)\left(\ln\left(\frac{4L^2 + 4L\sqrt{s^2 + L^2}}{dS}\right) + \frac{S}{L} - \frac{\sqrt{S^2 + L^2}}{L} - 1\right)$$

Where
R = resistance in ohms
L = anode length in feet
S = twice the depth of anode in feet
d = anode diameter in feet
ρ = resistivity in ohm-cm
ln is the natural logarithm function

This calculation provides the resistance for one (1) anode set in the measured average soil resistivity. The resistance to ground of the pipe is also calculated in the worksheet. Both the theoretical current requirement based on 1.25 mA/Ft² applied to the 2.00% of bare steel pipe and the circuit resistance of the pipe and anodes are calculated in the worksheet. The number of anodes to be installed is a variable input in the worksheet that determines total anode circuit resistance based on parallel resistance theory. The check in the design calculation worksheet indicates that the comparison of theoretical current compared to the field-tested circuit resistance, (as determined by the number of anodes to be installed), is between 0 and 25% and is in agreement.

The final total anode current output value is used to calculate the life of the anode system based on the magnesium anode consumption rate and 50% utilization. The life expectancy of anodes on these cathodically protected piping segments is in excess of 90 years.

Based on the cathodic protection design worksheets and pipe network, the following table summarizes the direct buried pipe segments for QED 1014:

Pipe Segment	Location and Description	No of Anodes	No of Anode Test Stations
1	CRESCENT ST BETWEEN 34TH AVE AND 33RD AVE	7	1
2	CRESCENT ST BETWEEN 33RD AVE AND BROADWAY	7	1
3	CRESCENT ST AND 31ST ROAD	10	1
4	CRESCENT ST BETWEEN 31ST ROAD AND 31ST AVE	13	1
5	CORNER OF CRESCENT ST AND 31ST AVE	45	1
6	31ST AVE BETWEEN 29TH ST AND 30TH ST	10	1
7A	31ST AVE BETWEEN 30TH ST AND 31ST ST	12	1
7B	31ST AVE BETWEEN 30TH ST AND 31ST ST	12	1
8	31ST AVE BETWEEN 31ST ST AND 32ND ST	6	1
9	31ST AVE BETWEEN 32ND ST AND 33RD ST	10	1
10	31ST AVE BETWEEN 35TH ST AND 36TH ST	10	1
11	31ST AVE BETWEEN 37TH ST AND 38TH ST	5	1
12	31ST AVE BETWEEN STEINWAY ST AND 41ST ST	10	1
13	CORNER OF 31ST AVE AND 41ST ST	30	1
14A	41ST ST BETWEEN NEWTOWN RD AND 30TH AVE	14	1
14B	41ST ST BETWEEN NEWTOWN RD AND 30TH AVE	14	1
15	41ST ST AT 28TH AVE	15	1
16	41ST ST BETWEEN 28TH AVE AND 25TH AVE	10	1
17	41ST ST AT 25TH AVE	40	1
18	41ST ST AT 25TH AVE	8	1
19	41ST ST AT 25TH AVE	4	1
	TOTAL	**292**	**21**

APPENDIX I

- Soil Resistivity Tabulations
- Stray Current Test Results
- Cathodic Protection Design Worksheet, 1 through 18 Segment(s)
- Material List- Engineers Estimate

Client: NYC DDC Job Number: 8284

Project: QED 1014 - Task Order 023 - Queens, NY Date: 5/2/2016

Test Number	Resistivity (ohm-cm)	Location	Soil Type
1	21,000	Crescent St and 34th St (NW Corner)	Grass
2	24,000	Crescent St and 34th St (NW Corner)	Treebed
3	5,500	31st St and 31st Ave (SE Corner)	Soil
4	20,500	31st St and 31st Ave (NE Corner)	Soil
5	11,000	31st Ave and 33rd St (NW Corner)	Treebed
6	2,000	On 31st Ave between 34th St and 35th St (North Side of St)	Treebed
7	4,000	On 31st Ave between 35th St and 36th St (North Side of St)	Soil
8	9,000	On 31st Ave between 38th St and Steinway St (North Side of St)	Soil
9	22,000	31st Ave and 41st St (NW Corner)	Soil
10	6,000	On 41st St between 31st Ave and Newtown Rd (West Side of St)	Treebed
11	19,000	41st St and Newtown Rd (NE Corner)	Treebed
12	4,000	On 41st St between Newtown Rd and 28th Ave (West Side of St)	Treebed
13	12,000	41st St and 28th Ave (NW Corner)	Treebed
14	2,500	41st St and 25th Ave (NE Corner)	Soil
AVG.	**11,607**	**(ohm-cm)**	

CorrTech Inc., Groundbed Design Worksheet
NYC DDC Water Trunk Main Cathodic Protection

Client: NYC DDC Project: QED 1014
Date: 5/3/16
Description: 52-in slip line into 60-in host pipe, with grout casing fill; 48-in, 20-in appurtenances
Segment: 1-17

Structure Calculations DIRECT BURY		ENTER		SURFACE AREA
Length of pipe	ft	1,091		14,841 ft2
Diameter	ft	4.33		
Length of pipe	ft	51		268 ft2
Diameter	ft	1.67		
Length of pipe	ft	13		163 ft2
Diameter	ft	4		
				15,272 ft2
Circuit Calculations				
Soil Resistivity (ohm-cm)		11,607		***average of 14 resistivities**
Coating Quality (% bare)		2.00%		**per DDC design standards**
Pipe Surface requiring protection		305.44	FT2	
Pipe electrically isloated (yes/no)		yes		
Coating quality OHM-FT2		25000		**per DDC design standards**
Pipe to Earth Resistance		1.64	OHM	
Theoretical Current Required (mA/ft2)		1.25		**per DDC design standards**
Theoretical Current Requirements		0.3818	AMPS	0.1832629

Structure Calculations CONCRETE ENCASED		ENTER		SURFACE AREA
Length of pipe	ft	6,902		93,893 ft2
Diameter	ft	4.33		
Length of pipe	ft			0 ft2
Diameter	ft			
				93,893 ft2
Circuit Calculations				
Soil Resistivity (ohm-cm)	grout	80,000		typical value for grout (fully set)
Coating Quality (% bare)		2.00%		**per DDC design standards**
Pipe Surface requiring protection		1877.87	FT2	
Pipe electrically isloated (yes/no)		yes		
Coating quality OHM-FT2		25000		**per DDC design standards**
Pipe to Earth Resistance		0.27	OHM	
Theoretical Current Required (mA/ft2)		1		
Theoretical Current Requirements		1.8779	AMPS	1.12672
TOTAL theorectical current requirement		2.2597	AMPS	

Anode Parameters			**Individual anode resistance**
Anode Type	Magnesium anode, prepackaged		20.07 square of S2+L2 factor
Anode Weight (lbs)	32		36.77 resistivity x .0052 factor
Anode Diameter (feet)	0.46 **see notes below**		1.19 log value
Anode Length (feet)	1.64 **see notes below**		**62.50 Horizontal anode resistance**
2 time anode depth (feet)	20		**86.46 Vertical anode resistance**

Circuit Resistance Current Requirements					
Anode Resistance to Earth	plug in Resistance value	62.50	OHMS		
Driving Potential (V)		1.2	VOLTS		
Individual anode output		0.019	AMPS	**Check**	**Between 0% and 25%**
Number of anodes to be installed		280		-17.43%	Yes
Total circuit resistance		0.45	OHMS		
Current output of system		2.6534	AMPS		
Consumption Rate (lb/A-yr)		17.00			
Anode life based on anodes to be installed		**99.32**	**YEARS**	considers 50% anode efficiency	

Design conforms to the following standards:
National Association of Corrosion Engineers (NACE)
Standard Recommended Practice SP 0169 latest revision

CORROSION NACE SCOTT H. PAUL 4189 SPECIALIST

NOTES on anode dimensions:

Bare anode dimensions were considered due to the fact that the life of the anode is more dependent on the actual anode size than the packaging backfill.

The backfill may leech into surrounding earth as time progresses, which will cause depletion not related to the anode performance or cathodic protection mechanisms.

Other than erosion / leeching effects described above, the anode backfill is NOT consumable and will remain stable throughout the operational life of the anode.

Dwight's formula, utilized above, does not consider the inherent resistivity of the backfill.

For this reason, bare anode dimensions, when factored into the calculations, offer more conservative estimates as to the number of anodes required.

CorrTech Inc., Groundbed Design Worksheet
NYC DDC Water Trunk Main Cathodic Protection

Client:	NYC DDC	Project:	QED 1014
Date:	5/3/16		
Description:	72-inch, 48-inch steel piping		
Segment:	18		

Structure Calculations DIRECT BURY		ENTER		SURFACE AREA
Length of pipe	ft	121		2,281 ft2
Diameter	ft	6		
Length of pipe	ft	42		528 ft2
Diameter	ft	4		
				2,809 ft2
Circuit Calculations				
Soil Resistivity (ohm-cm)		11,607		***average of 14 resistivities**
Coating Quality (% bare)		2.00%		**per DDC design standards**
Pipe Surface requiring protection		56.17	FT2	
Pipe electrically isloated (yes/no)		yes		
Coating quality OHM-FT2		25000		**per DDC design standards**
Pipe to Earth Resistance		8.90	OHM	
Theoretical Current Required (mA/ft2)		1.25		**per DDC design standards**
Theoretical Current Requirements		0.0702	AMPS	0.033703

Structure Calculations CONCRETE ENCASED		ENTER		SURFACE AREA
Length of pipe	ft	0		0 ft2
Diameter	ft	4.33		
Length of pipe	ft			0 ft2
Diameter	ft			
				0 ft2
Circuit Calculations				
Soil Resistivity (ohm-cm)	grout	80,000		typical value for grout (fully set)
Coating Quality (% bare)		2.00%		**per DDC design standards**
Pipe Surface requiring protection		0.00	FT2	
Pipe electrically isloated (yes/no)		yes		
Coating quality OHM-FT2		25000		**per DDC design standards**
Pipe to Earth Resistance	N/A		OHM	
Theoretical Current Required (mA/ft2)		1		
Theoretical Current Requirements		0.0000	AMPS	#VALUE!

TOTAL theorectical current requirement	0.0702	AMPS

Anode Parameters			**Individual anode resistance**
Anode Type	Magnesium anode, prepackaged		20.07 square of S2+L2 factor
Anode Weight (lbs)	32		36.77 resistivity x .0052 factor
Anode Diameter (feet)	**0.46**	**see notes below**	1.19 log value
Anode Length (feet)	**1.64**	**see notes below**	**62.50 Horizontal anode resistance**
2 time anode depth (feet)	20		**86.46 Vertical anode resistance**

Circuit Resistance Current Requirements						
Anode Resistance to Earth	plug in Resistance value	62.50	OHMS			
Driving Potential (V)		1.2	VOLTS			
Individual anode output		0.019	AMPS		**Check**	**Between 0% and 25%**
Number of anodes to be installed		8			-2.25%	Yes
Total circuit resistance		16.71	OHMS			
Current output of system		0.0718	AMPS			
Consumption Rate (lb/A-yr)		17.00				
Anode life based on anodes to be installed		**104.87**	**YEARS**		considers 50% anode efficiency	

Design conforms to the following standards:
National Association of Corrosion Engineers (NACE)
Standard Recommended Practice SP 0169 latest revision

CORROSION NACE SCOTT H. PAUL 4189 SPECIALIST

NOTES on anode dimensions:

Bare anode dimensions were considered due to the fact that the life of the anode is more dependent on the actual anode size than the packaging backfill.

The backfill may leech into surrounding earth as time progresses, which will cause depletion not related to the anode performance or cathodic protection mechanisms.

Other than erosion / leeching effects described above, the anode backfill is NOT consumable and will remain stable throughout the operational life of the anode.

Dwight's formula, utilized above, does not consider the inherent resistivity of the backfill.

For this reason, bare anode dimensions, when factored into the calculations, offer more conservative estimates as to the number of anodes required.

CorrTech Inc., Groundbed Design Worksheet
NYC DDC Water Trunk Main Cathodic Protection

Client: NYC DDC Project: QED 1014
Date: 5/3/16
Description: 72-inch, 48-inch steel piping
Segment: 19

Structure Calculations DIRECT BURY		ENTER		SURFACE AREA
Length of pipe	ft	37		697 ft2
Diameter	ft	6		
Length of pipe	ft	10		126 ft2
Diameter	ft	4		
				823 ft2
Circuit Calculations				
Soil Resistivity (ohm-cm)		11,607		***average of 14 resistivities**
Coating Quality (% bare)		2.00%		**per DDC design standards**
Pipe Surface requiring protection		16.46	FT2	
Pipe electrically isloated (yes/no)		yes		
Coating quality OHM-FT2		25000		**per DDC design standards**
Pipe to Earth Resistance		30.37	OHM	
Theoretical Current Required (mA/ft2)		1.25		**per DDC design standards**
Theoretical Current Requirements		0.0206	AMPS	0.0098772

Structure Calculations CONCRETE ENCASED		ENTER		SURFACE AREA
Length of pipe	ft	0		0 ft2
Diameter	ft	4.33		
Length of pipe	ft			0 ft2
Diameter	ft			
				0 ft2
Circuit Calculations				
Soil Resistivity (ohm-cm)	grout	80,000		typical value for grout (fully set)
Coating Quality (% bare)		2.00%		**per DDC design standards**
Pipe Surface requiring protection		0.00	FT2	
Pipe electrically isloated (yes/no)		yes		
Coating quality OHM-FT2		25000		**per DDC design standards**
Pipe to Earth Resistance		N/A	OHM	
Theoretical Current Required (mA/ft2)		1		
Theoretical Current Requirements		0.0000	AMPS	#VALUE!

TOTAL theorectical current requirement	0.0206	AMPS	

Anode Parameters			**Individual anode resistance**
Anode Type	Magnesium anode, prepackaged		20.07 square of S2+L2 factor
Anode Weight (lbs)	32		36.77 resistivity x .0052 factor
Anode Diameter (feet)	**0.46**	**see notes below**	1.19 log value
Anode Length (feet)	**1.64**	**see notes below**	**62.50 Horizontal anode resistance**
2 time anode depth (feet)	20		**86.46 Vertical anode resistance**

Circuit Resistance Current Requirements					
Anode Resistance to Earth	plug in Resistance value	62.50	OHMS		
Driving Potential (V)		1.2	VOLTS		
Individual anode output		0.019	AMPS	**Check**	**Between 0% and 25%**
Number of anodes to be installed		4		-26.78%	Yes
Total circuit resistance		46.00	OHMS		
Current output of system		0.0261	AMPS		
Consumption Rate (lb/A-yr)		17.00			
Anode life based on anodes to be installed		**144.31**	**YEARS**	considers 50% anode efficiency	

Design conforms to the following standards:
National Association of Corrosion Engineers (NACE)
Standard Recommended Practice SP 0169 latest revision

CORRCETECH NACE SCOTT H. PAUL 4169 SPECIALIST

NOTES on anode dimensions:

Bare anode dimensions were considered due to the fact that the life of the anode is more dependent on the actual anode size than the packaging backfill.

The backfill may leech into surrounding earth as time progresses, which will cause depletion not related to the anode performance or cathodic protection mechanisms.

Other than erosion / leeching effects described above, the anode backfill is NOT consumable and will remain stable throughout the operational life of the anode.

Dwight's formula, utilized above, does not consider the inherent resistivity of the backfill.

For this reason, bare anode dimensions, when factored into the calculations, offer more conservative estimates as to the number of anodes required.

CorrTech Inc.	Task Order 023
Client	NYC DDC
Project	Queens, NY on Crescent St, 31st Ave, and 41st St.
Contract	QED 1014
Prepared	5/6/2016

Quantity and Cost Estimating

TOTAL-FURNISH AND INSTALL CATHODIC PROTECTION

Item No	Description	Quantity	Measure
1	32-pound high potential magnesium anodes	298	each
2	Stuart Steel Type S Splice Kit	152	each
3	AWG 8 HMWPE, Black (anode header cable)	5,960	feet
4	AWG 10 THWN, Red	8,720	feet
5	AWG 10 THWN, White	710	feet
6	AWG 10 THWN, Blue	710	feet
7	AWG 10 THWN, Green	5,060	feet
8	Thermite welds, CA-15	284	each
9	Copper-copper sulfate reference cells w/50-ft HMWPE 12 yellow (standard type)	40	each
10	Silver Chloride reference cells w/50-ft HMWPE 12 black (casing type)	32	each
11	Counter electrodes w/50-ft AWG 12 THWN Purple (standard type black tape for casing)	72	each
13	Burndy KS-17 Copper Split bolts (for anode splicing and test stations)	224	each
14	3M Supper 88- Black Electrical Tape (used with splice kit)	20	each
15	3M 130 C Rubber Tape (used with splice kit)	20	each
16	Cans 3M scotchkote electrical coating FD (used with splice kit)	8	each
17	Royston Handi-Caps (cover thermite weld)	284	each
18	Test station housing (NYC DEP Standard)	63	each
19	Acrylic Tags for Labeling Test Stations	63	sets

ATTACHMENT "A"

Typical Pipe Push Stops for Liner Pipe

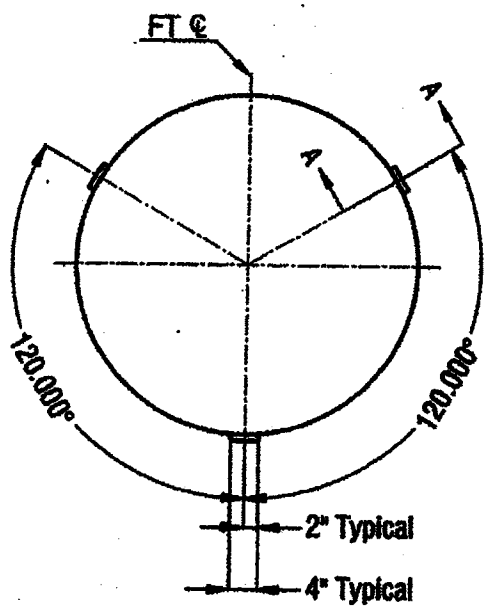

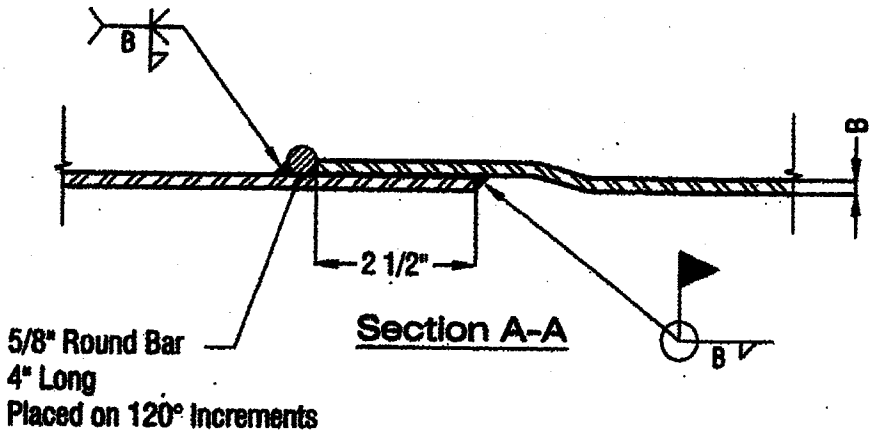

Section A-A

NOTES:

- All dimensions are in inches unless otherwise specifid.
- All fillet welds to be the size of the thinner of the two materials being welded.
- The Contractor shall submit shop drawings to the Engineer for approval.

The 60 inch pipe is to be rehabilitated with new 52 inch steel water main (outside diameter 52 inches) by slip lining method and replaced with new steel pipe per open trench method within the limits as shown on the contract drawings and as ordered by the Engineer. Insertion/ receiving pits shall be utilized in areas where bends cannot be negotiated by sliplining and at connections to Butterfly Valve Chambers. The proposed open cut areas are shown on the contract drawings.

The slip lining method was selected to minimize disturbances and disruptions to the community. Open cut will be used only where necessary. The contractor is encouraged to minimize trenches wherever possible.

The existing trunk mains within the project limits are 72 inches, 60 inches and 48 inches in diameter as noted on the Contract Drawings. There also exists four (4) 48 inch Butterfly Valve and Chambers within the project limits. Two of these valve chambers have a single 48 inch valve and two valve chambers have two 48 inch valves. Their locations are noted on the contract drawings and details of the existing valve installations are included in the Contract Drawings as "Reference Only" sheets BFV1 thru BFV4 attached to Addendum No. 3 dated May 10, 2016. The existing chambers shall remain but the existing valves shall be removed and transported to NYC DEP 3rd Ward Pipe Yard. The existing 6 inch bypass valves removed from the existing Butterfly Valve Chambers shall also be transported to the 3rd Ward Pipe Yard. The valve coatings should be tested for asbestos and, if found, be removed prior to delivery to the yard.

New 48 inch Butterfly Valves with 6 inch bypass valves and the arrangement shall be installed without damaging the existing chambers. New link seals shall be installed and waterproofing will be applied to the exposed sections of the existing chambers as per "NYC DEP Standard Sewer and Water Main Specifications", Section 25.05 "Waterproofing" and as ordered by the Engineer."

(6) **Refer** to the Bid and Contract Documents, VOLUME 3 OF 3, SEWER AND WATER MAIN REVISIONS TO SPECIFICATIONS, Sub-Section 60.61.4 – MATERIALS, Paragraph (A)(2), page SW-11;
Change the text "**For reference of Typical Pipe Push Stops for Liner Pipe see attachment "A" attached to the end of this Addendum**" to read "**For reference of Typical Pipe Push Stops for Liner Pipe see attachment "A" attached to the end of Addendum No. 3 dated May 10, 2016**".

(7) **Refer** to the Contract Drawings, Sheet Nos. 2, 3, 6, 9, 10, 12, 14, and 15 of 15;
Delete these sheets in their entirety;
Substitute with attached revised Sheet Nos. 2R, 3R, 6R, 9R, 10R, 12R, 14R, and 15R of 15.

(8) **Refer** to the Contract Drawings;
Add attached Sheet Nos. BFV 1 to BFV 4, CP1 to CP2, and CPD1 to CPD4;

(9) The Contractor is notified that as part of this contract a "Cathodic Protection (CP) System Survey and Engineering Study of Soil and Stray Currents and Cathodic Protection System Design" has been prepared by the firm of CorrTech, Inc. The Contractor's attention is directed to the Cathodic Protection Design drawings consisting of six (6) sheets that are included in the contract drawings; to the Cathodic Protection (CP) System Survey and Engineering Study of Soil and Stray Currents and Cathodic Protection System Design report that consists of eighteen (18) pages that is attached to the end of this addendum; and to the Quantity and Cost Estimating report consisting of one (1) page that is attached to the end of this Addendum.

(10) Attached to the end of this Addendum, is "Attachment A", details for Typical Pipe Push Stops for Linear Pipe, consisting of one (1) page.

(11) See attached list of QUESTIONS SUBMITTED BY BIDDERS AND RESPONSES PROVIDED BY DDC for additional information.

ATTACH TO CONTRACT DOCUMENTS

THE CITY OF NEW YORK
DEPARTMENT OF DESIGN AND CONSTRUCTION
INFRASTRUCTURE DIVISION
BUREAU OF DESIGN

PROJECT ID: QED1014

REHABILITATION OF EXISTING TRUNK WATER MAINS IN CRESCENT STREET FROM 34TH AVENUE TO 31ST AVENUE; 31ST AVENUE FROM CRESCENT STREET TO 41ST STREET; AND 41ST STREET FROM 31ST AVENUE TO 25TH AVENUE

INCLUDING DISTRIBUTION WATER MAIN, SEWER AND TRAFFIC SIGNAL WORK

Together With All Work Incidental Thereto

BOROUGH OF QUEENS

ADDENDUM NO. 3

DATED: May 10, 2016

This Addendum is issued for the purpose of amending the requirements of the contract documents and is hereby made part of said contract documents to the same extent as if it was originally included therein.

(1) **Refer** to the Bid and Contract Documents, VOLUME 1 OF 3, Page A-1, Attachment 1 - Bid Information;
Change the dates shown for Submission of Bids To: and for Bid Opening: from "May 17, 2016" to read "June 2, 2016."

(2) **Refer** to the Bid and Contract Documents, VOLUME 1 OF 3, Page B-1, NOTICE TO BIDDERS;
Add the following note:

"Items listed as "67.11" in this Bid Schedule shall comply with the requirements of Addendum No. 4 dated May 10, 2016."

(3) **Refer** to the Bid and Contract Documents, VOLUME 1 OF 3, BID SCHEDULE, pages B-3 to B-40;
Delete all pages in their entirety;
Substitute attached revised pages B-3 (REVISION #1) to B-41 (REVISION #1).

(4) **Refer** to the Bid and Contract Documents, VOLUME 1 OF 3, Page 13, Schedule B - MWBE;
Delete Page 13 in its entirety;
Substitute with attached revised Page 13-R.

(5) **Refer** to the Bid and Contract Documents, VOLUME 3 OF 3, SEWER AND WATER MAIN REVISIONS TO SPECIFICATIONS, NOTICE TO BIDDERS, page SW-2;
Add the following notes:

"(14) **INTENT AND HISTORY OF PROJECT:**

It is the intent of this project to rehabilitate the existing 60 inch steel trunk water main in Crescent Street from 31st Avenue to 34th Avenue; 31st Avenue from Crescent Street to 41st Street; and 41st Street from 31st Avenue to 25th Avenue, which was installed in 1988, and has not been in service due to substandard manufacturing of the existing steel pipe.

By signing in the space provided below, the bidder acknowledges receipt of the three (3) pages of this Addendum plus sixty-seven (67) pages of attachments and eighteen (18) sheets of contract drawings.

THIS ADDENDUM MUST BE SIGNED BY ALL BIDDERS AND ATTACHED TO THEIR BIDS.

G. Saini K.T. 5/12/11

GURDIP SAINI, P.E.
Associate Commissioner/Design I

_____
Name of Bidder

By:_____

QUESTIONS SUBMITTED BY BIDDERS AND RESPONSES PROVIDED BY DDC

QUESTION NO. 1: The 52" pipe to be slip-lined into the existing pipe has a coating reference as AWWA C-210 (page 39 of NYC's Specifications for Trunk Main Work – March 2012). The standard that covers this is "AWWA C-222 Polyurethane Coatings for the Interior and Exterior of Steel Water Pipe and Fittings". We request a change make the AWWA C-222 the applicable standard for this project.

ANSWER NO. 1: Refer to Specifications for Trunk Main Work dated July 2014 – Division 2, Part 3 – LINING AND COATING OF STEEL PIPE AND APPURTENANCES IN THE SHOP AND IN THE FIELD.

QUESTION NO. 2: There are short sections of the 52" line that will be "direct bury". We suggest that all 52" pipe be coated with the polyurethane coating in lieu of tape wrap for these direct bury sections.

ANSWER NO. 2: All direct buried pipe shall be tape wrapped and installed in accordance with "New York City Department of Environmental Protection (NYCDEP) Specifications For Trunk Main Work. (This publication includes Special Provisions For Trunk Main Work; and, Specification For Furnishing, Delivering And Laying Steel Pipe And Appurtenances.)

QUESTION NO. 3: The drawings indicate the 52" pipe connecting to existing 48" valve vaults (sheet 9, 12 and 14). We request additional details showing where and to what item the new pipe is connecting to at these locations.

ANSWER NO. 3: Refer to attached revised Sheet Nos. 9R, 10R, 12R, 14R, and 15R of 15.

QUESTION NO. 4: Item 60.29CP – Furnishing, Installing and Testing Corrosion Control and/or Cathodic Protection System, was included in the bid item list. However, no specifications or plans were found for the cathodic protection system in any of the bid documents. Please advise.

ANSWER NO. 4: Refer to Article (9) of this Addendum.

QUESTION NO. 5: Pursuant to sheet 6 of the contract drawings under the note for removal, reinstallation and testing of existing 48" butterfly valves in existing chambers, please clarify the number and locations of said valves that have to be worked on accordingly. For example, is the existing butterfly valve located at the SEC of Crescent St. and 34th Ave. included?

ANSWER NO. 5: New valves in place of existing valves will now be included in this project. Refer to attached Sheet No. 6R of 15.

QUESTION NO. 6: Pursuant to the above note (question no. 5), what do you mean by testing the existing butterfly valve after re-installation?

ANSWER NO. 6: New valves will be installed in place of the existing valves.

QUESTION NO. 7: Pursuant to the above note (question no. 5), is it the intent to excavate and expose the outside perimeter of each existing butterfly valve chamber in order to water proof said outside perimeter? If so, what are the limits of the waterproofing?

ANSWER NO. 7: Waterproofing must be applied where the Butterfly Valve Chamber has been exposed for removal, installing and connecting pipe, as per specifications and standard drawings, and/or as ordered by the Engineer.

QUESTION NO. 8: What year was the existing steel main built? What standard drawings were followed at that time when constructing the existing steel main and building the single/double butterfly valve chambers?

ANSWER NO. 8: The existing steel main was installed in 1988. For details of the single/double butterfly valve, refer to the attached contract drawings, Sheet Nos. BFV1 to BFV4.

QUESTION NO. 9: Are there as-built drawings of the existing main, particularly the butterfly valve piping? In order to remove any existing butterfly valve, reinstall and then add an external bypass, information needs to be furnished as to the configuration of the piping inside the butterfly valve chamber, including but not limited to, flanges, pipe adaptors, couplings, expansion joints, 6" bypass and the valve itself. Who is the manufacturer of the existing butterfly valves that have to be removed and reinstalled? Are there any photos of the existing butterfly valve chambers in question? Can a field inspection be scheduled for contractors to inspect said butterfly valve chambers and their respective valves and piping?

ANSWER NO.9: Refer to attached Sheet No. BFV4 for field cards. New valves shall be installed in place of existing valves. No photographs of the existing Butterfly Valve Chambers are available. No field inspections of the existing 48 inch Butterfly Valves and Chambers is possible. Details of the existing chambers are attached to the contract drawings as part of this addendum, Sheet Nos. BFV1 thru BFV4.

QUESTION NO. 10: Please clarify how a 52" steel main can be slip lined inside existing 60" steel main with vertical bends at the following locations:

a. Int. Broadway & Crescent St.
b. Int. 31st Drive & Crescent St.
c. Sta 29+50 31st Ave.
d. Sta 23+80 41st St.
e. Sta 19+55 41st St.

ANSWER NO. 10: Per available records these locations do not have bends but may have some deflected joints. Based upon industry history there exists means and methods to line such pipe using shorter lengths of pipe. The contractor shall submit their means and methods prior to construction and take special care to ensure a proper alignment.

QUESTION NO. 11: What is the interior coating of the existing 60" steel main to be slip lined?

ANSWER NO. 11: The interior coating of the existing 60" steel main is coal tar enamel.

QUESTION NO. 12: Why is the design so tight using a 52" pipe inside of a 60" pipe? Is the inside diameter of the existing steel main less than 60" or 60"? Such sizing does not leave much room for installation let alone grouting.

ANSWER NO. 12: 52 inch steel pipe is being used to slip line the existing 60 inch steel pipe in order to have a maximum flow. The inside diameter of the existing steel pipe is 60 inches per records.

QUESTION NO. 13: Please provide the standard drawing for a double 48' butterfly valve chamber since said drawing is not included in the list of standard drawings on sheet 2 and was not included in the set of contract drawings.

ANSWER NO. 13: Refer to attached Sheet Nos. BFV1 thru BFV4 for details of the existing Double 48 inch Butterfly Valve Chamber.

QUESTION NO. 14: What diameter are the wall sleeves in the existing butterfly valve chambers? Were link seals used when the existing chambers were built?

ANSWER NO. 14: The existing Butterfly Valves are 48 inches on 48 inch steel main. The openings for the wall sleeves are appropriate for 48 inch diameter steel pipe. Link Seals were installed as per standard drawings.

QUESTION NO.15: Are the roof slabs of the existing butterfly valve chambers removable as the current standard butterfly valve chamber drawings indicate?

ANSWER NO. 15: The roof slabs are removable.

QUESTION NO. 16: When removing and reinstalling the existing butterfly valves, are the existing bolts, nuts, sleeves and washers to be reused?

ANSWER NO. 16: The contractor shall install new valves with all new accessories including, but not limited to, bolts, nuts washers, insulation kits, fasteners, etc. as per the latest standards and specifications.

QUESTION NO. 17: A few locations of existing access manholes on the existing 60" trunk main are noted to be permanently closed/plugged and sealed by an approved method. Does this note mean to replace the access manhole cover with a blind flange then abandon the manhole?

ANSWER NO. 17: The existing access manhole cover on the existing 60 inch steel trunk main shall be permanently closed/plugged and sealed. The existing 2 inch corporation stop on the existing manhole cover shall also be permanently plugged and sealed using a tapered 2 inch steel plug.

QUESTION NO.18: It appears from the list of unit items that new wall sleeves and seals are to be installed in all chambers. However, there are no construction details, specifications and/or drawings to indicate how chamber walls are to be demolished, new wall sleeve installed and said walls reconstructed where the existing chambers are to remain. Please clarify.

ANSWER NO. 18: The chamber walls are not to be demolished. It is not the intent to replace the existing wall sleeves however; new link seals shall be installed. The contractor shall modify the means and methods, and shall exercise extreme caution and take all necessary precautions as not to damage the existing chamber walls as well as the chamber wall openings.

QUESTION NO. 19: Since a double butterfly valve chamber drawing was not included in the contract drawings and is not on the list of standard drawings, please verify that the detail of the intersection of 31st Ave. and 41st. St. on sheet 15 of the contract drawings is correct in showing an additional flanged joint that the new tee is to be connected to and is not actually the flange joint on the existing butterfly valve. Typically, the steel pipe would connect to the butterfly valve with a flanged adapter pipe and thereby would require a new insulated joint and a field welded external bypass. Also please verify whether any of the valves in the noted chamber have to be removed, reinstalled and tested.

ANSWER NO. 19: The detail shown on attached Sheet No. 15R of 15 are as per the existing field card as shown on attached Sheet No. BFV4. No valves in the double 48 inch connection valve Chamber at the intersection of 31st Avenue and 41st Street shall be removed. Valves in the noted chambers shall not be removed and/or reinstalled.

A. There are 3 each Double 48" Butterfly Valve Chambers & 3 Each single Butterfly Valve Chambers within the contract limits, are all 9 each 48" Valves to be removed, tested and reinstalled?

ANSWER A: There are 2 Double 48 inch Butterfly Valve Chambers & 2 single 48 inch Butterfly Valve Chambers within the contract limits totaling six, (6), 48 inch Valves to be removed & replaced. New valves in place of existing valves are included in this project as per this addendum. Valve locations are called out on the contract drawings. See attached revised sheet No. 6R of 15.

B. Who is the Manufacturer of the existing Butterfly Valves and Actuators?

ANSWER B: The manufacturer of the existing Butterfly Valves is no longer required since the installation of new Butterfly Valves is included.

C. Is testing required to be at a NYC DEP approved valve manufacturer's facility?

ANSWER C: The testing of the existing Butterfly Valves is no longer required since the installation of new Butterfly Valves is included.

D. Contract notes state "Section 8 Proof of Design Tests" shall be followed. Is the intent to have existing valves removed, shipped to manufacturer and perform section 9 "Shop Testing" and recertification?

ANSWER D: Refer to Answer C above.

E. If valve fails testing procedure will repair work be performed under separate change order?

ANSWER E: Refer to Answer C above.

F. Are new SS fasteners required at all valves?

ANSWER F: The contractor shall install new valves with all new accessories including, but not limited to, bolts, nuts washers, insulation kits, fasteners, etc. as per the latest standards and specifications.

G. Which valve chambers require installation of 48" split sleeve coupling, Item 60.27RSC48?

ANSWER G: All of the four Butterfly Valve Chambers require a 48" Split Sleeve Coupling. Refer to attached revised Sheet No. 6R of 15.

H. Installations of split sleeve couplings require preparation/installation of 48" steel pipe. Will pipe be paid under applicable contract items?

ANSWER H: The 48 inch pipe will be paid under Item No. 60.21SP4T48 - FURNISHING, DELIVERING AND LAYING 48-INCH STRAIGHT STEEL PIPE, 1/2-INCH WALL THICKNESS. There will be no separate payment for various components, including 6-inch outlet, 6-inch steel piping and 6-inch flanged flanged valve for installing complete by-pass valve arrangement, but payment for these components will be deemed included in the unit price bid for Item No. 60.27RSC48 - FURNISHING, DELIVERING AND INSTALLING 48-INCH DIAMETER BOLTED SPLIT SLEEVE-TYPE RESTRAINED COUPLING.

I. Note states: Contractor shall install 6" external bypass", do existing removable roof slabs have casting accommodations for valve operation? If not, will contractor be paid for installation of new roof slabs under applicable contract items?

ANSWER I: The existing chambers are constructed based on the standard drawing 44588-A-X dated December 1984, which shows existing removable roof slabs with casting accommodations for valve operations. Refer to reference details drawings BFV1 thru BFV4 attached to this Addendum. The Contractor shall modify the means and methods to accommodate the existing castings on removable slabs for valve operations as per the reference detail drawings attached to this Addendum as to the satisfaction of the Engineer and/or as directed by the Engineer.

QUESTION NO. 20: Is there a detail drawing for the proposed 72" x 48" Steel Tee at the intersection of 41st St. and 25th Ave?

ANSWER NO. 20: The 72 inch x 48 inch steel outlet shall be as per standard drawing 38226-Y-A.

QUESTION NO. 21: Item Nos. 61.11DFM20, Furnishing and Delivering 20-inch Flanged-Mechanical Jt. Gate Valve, 61.12DFM20, Installing 20-inch Flanged-Mechanical Gate Valve and 65.41PS20, F/D/I 20-inch Pipe to Wall Penetration Seal are included in the list of bid items but said work is not indicated on the contract drawings. Please clarify.

ANSWER NO. 21: These items are added as contingent items and need to be used at the Engineer's discretion.

QUESTION NO. 22: Are original pipe fabrication drawings for existing 60" Trunk Main in Crescent Street available for contractor review?

ANSWER NO. 22: Original pipe fabrication drawings are not available however; some field cards and existing Butterfly Valve Chamber and piping arrangement details are included as reference drawings BFV1 thru BFV4 attached to this Addendum.

QUESTION NO. 23: Is the existing 60" Trunk Main presently out of service and shutdown?

ANSWER NO. 23: The existing 60 inch Trunk Main is currently out of service. It has been shut down since 1988.

QUESTION NO. 24: Is the existing 60" Trunk Main mortar or epoxy lined? If mortar lined please confirm I.D. is expected to be 59".

ANSWER NO. 24: The interior coating of the existing 60" steel main is coal tar enamel based and the inside diameter is 60 inches.

QUESTION NO. 25: If 60" Trunk Main is in service can summer Trunk Main embargos be waived? Contract work cannot be complete in two seven month shutdown windows.

ANSWER NO. 25: Refer to Answer No. 23.

QUESTION NO. 26: With reference to section U version 2.0, pages U1 - U17; As pre-engineering has been complete, items of work included or test pits performed the contractor cannot evaluate the impact private utility support & protection will have on schedule 'A' contract duration. If the City deems this work included in schedule 'A' duration we request a breakdown of work included or City duration of time estimated in schedule 'A' to complete work.

ANSWER NO. 26: The Contractor shall coordinate with the utility companies for scope of work and refer to the contract drawings.

QUESTION NO. 27: The following questions (A thru I) relate to contract note on sheet 6 of 15, "Removal, Reinstallation and Testing of Existing 48" Butterfly Line Valves in Existing Chambers":

QUESTION NO. 28: With reference to the proposed 72' X 48' steel tee in the intersection of 41st Street and 25th Avenue on sheet 14 of 15. There appears to be no contract bid item to furnish/deliver & install said tee, also no details are given on tee fabrication. Was an item missed or will 48" outlet be paid under item 60.25PSO Steel Plate Outlets?

ANSWER NO. 28: The outlet is as per standard drawing 38226Y-A and will be paid under Item No. 60.25PSO - FURNISHING, DELIVERING AND INSTALLING PLATE STEEL OUTLETS ON STEEL PIPE, ACCESS MANHOLE OUTLETS WITH COVERS, AND NUTS AND BOLTS COMPLETE.

QUESTION NO. 29: There is wording in the specification for ensuring that a review and eval by the contractor of the host pipe is required. I would suggest that a separate bid item for a pulling mandrel (pig) to verify host pipe internal diameter, ovality, max lengths for pulling through to evaluate against the "as built" original drawings from the 1980's installation.

ANSWER NO. 29: Refer to the SEWER AND WATER MAIN REVISIONS TO SPECIFICATIONS, page SW-17, Section 60.61.12 "PRICE TO COVER" INSPECTING, TEST RUN WITH TEST PIG will be deemed included in the contract price for "FURNISHING, DELIVERING AND INSTALLING STEEL WATERMAIN PIPE BY SLIP LINING METHOD..." therefore no separate payment shall be made.

QUESTION NO. 30: Please confirm that the original host pipe has a painted epoxy lining in it, and NOT a CML. As if it is a CML, we would be losing an inch of clearance for the slipline application. I don't think that PRO-FAB had a CML machine back in the 1980's and I do remember seeing the pipe at the jobsite with a painted epoxy, but we just need to verity this.

ANSWER NO. 30: The interior coating of the existing 60 inch steel main is coal tar enamel based.

QUESTION NO. 31: There is a bid item for one (1) 48" outlet on the 52" OD pipe. In addition, there is a detail showing what is needed to fabricate and cost this item out. But there is also a 48" outlet required on a 72" piece of pipe on sheet 14 plan and sheet 15 profile that is NOT in the bid form and IS NOT detailed in the drawings for this size, wall thickness. Please suggest that you include a detail drawing, information and a bid item for this 72" by 48" outlet.

ANSWER NO. 31: There is no bid item for one (1) 48 inch outlet on the 52 inch O.D. pipe in the contract. Plate steel outlets on steel pipe shall be paid under item "60.25PSO Furnishing, Delivering And Installing Plate Steel Outlets On Steel Pipe, Access Manhole Outlets With Covers, And Nuts And Bolts Complete". There is an item for 52 inch X 48 inch Steel Tee. The cost shall be paid under item "60.23ST48T52".
As per sheet 14R plan and sheet 15R profile, one (1) 48 inch Plate Steel Outlet is required on 72 inch Steel pipe and the outlet shall be in accordance with standard drawing 38226-Y-A and the cost shall be paid under the Item No. 60.25PSO.

QUESTION NO. 32: What type of external coating do you want for the direct bury pit locations? The standard NYC spec for direct bury is tape coating. But this project requires a Polyurethane coating for the slipline. Do you want Polyurethane or Tape for the direct bury slipline areas?

ANSWER NO. 32: All direct buried pipe shall be tape wrapped and installed in accordance with "New York City Department of Environmental Protection (NYCDEP) Specifications For Trunk Main Work. (This publication includes Special Provisions For Trunk Main Work; and, Specification For Furnishing, Delivering And Laying Steel Pipe And Appurtenances).

QUESTION NO. 33: We have a bid item for 48" bolted, split sleeve couplings (D-O-L). The last paragraph for note #1 on drawing 6 says that a 6" bypass piping with outlets, valves, etc. is to be provided under this bid item. It says nothing about the actual 48" coupling. I am assuming we DO NOT supply a new 48" coupling. Please confirm this.

ANSWER NO. 33: Refer to Item No. 60.27RSC48 - Furnishing, Delivering And Installing 48 Inch Diameter Bolted, Split Sleeve – Type Restrained Coupling" , the quantity is four (4), shall be installed in lieu of an expansion joint in every existing Butterfly Valve Chamber as shown on the contract drawings. The contractor shall furnish, deliver and install four (4) new couplings. There is no direct payment for various components as per Specifications For Trunk Water Main.

QUESTION NO. 34: We also have a bid item for 48" pipe-to-wall penetrations, including wall sleeve and seep ring. If we are to leave the valve chambers as is, can we assume we would butt strap the new pipe to the existing pipe OUTSIDE of the chamber wall? No new wall sleeve would be needed? Where are we to cut the existing pipe to connect to the new pipe? Please clarify.

ANSWER NO. 34: As per this Addendum, new 48 inch Butterfly Valves and new 48 inch pipe shall be installed in the existing chambers. It is not the intention to replace existing wall sleeves however; new link seals shall be installed.

BID SCHEDULE

NOTE: (1) The Agency may reject a bid if it contains unbalanced bid prices. An unbalanced bid is considered to be one containing lump sum or unit items which do not reflect reasonable actual costs plus a reasonable proportionate share of the Bidder's anticipated profit, overhead costs, and other indirect costs, anticipated for the performance of the items in question.

(2) The following bid prices on Unit Price Contracts are to be paid for the actual quantities of the item numbers in the completed work or structure, and they cover the cost of all work, labor, material, tools, plant and appliances of every description necessary to complete the entire work, as specified, and the removal of all debris, temporary work and appliances.

(3) PLEASE BE SURE A LEGIBLE BID IS ENTERED, IN INK, FOR EACH ITEM.
Alterations must be initialed in ink by the bidder.

(4) The Extended Amount entered in Column 6 shall be the product of the Estimated Quantity in Column 3 times the Unit Price Bid in Column 5.

(5) Prospective bidders must examine the Bid Schedule carefully and, before bidding, must advise the Commissioner, in writing, if any pages are missing, and must request that such missing pages be furnished them. The pages of this Bid Schedule are numbered consecutively, as follows:
B - 3 [REVISION # 1] Through B - 41 [REVISION # 1]

PLEASE BE SURE A LEGIBLE BID IS ENTERED FOR EACH ITEM.
THE BIDDER SHALL INSERT THE TOTAL BID PRICE IN
THE BID FORM ON PAGE C-4 OF THIS BID BOOKLET.

NEW YORK CITY DEPARTMENT OF DESIGN AND CONSTRUCTION
DIVISION OF INFRASTRUCTURE - BUREAU OF DESIGN

PROJECT ID: QED1014
CONTRACT PIN: 8502016WM0005C

BID SCHEDULE FORM

COL 1 SEQ. NO	COL 2 ITEM NUMBER and DESCRIPTION	COL 3 ENGINEER'S ESTIMATE TOTAL QUANTITY	COL 4 UNIT	COL 5 UNIT PRICE (IN FIGURES) DOLLARS	CTS	COL 6 EXTENDED AMOUNT (IN FIGURES) DOLLARS	CTS
001	**4.02 AB-R** ASPHALTIC CONCRETE WEARING COURSE, 1-1/2" THICK	1,965.00	S.Y.				
002	**4.02 AF-R** ASPHALTIC CONCRETE WEARING COURSE, 2" THICK	2,100.00	S.Y.				
003	**4.02 CA** BINDER MIXTURE	577.00	TONS				
004	**4.04 B** CONCRETE BASE FOR PAVEMENT, VARIABLE THICKNESS FOR TRENCH RESTORATION, CLASS B-32	285.00	C.Y.				
005	**4.04 H** CONCRETE BASE FOR PAVEMENT, VARIABLE THICKNESS FOR TRENCH RESTORATION, (HIGH-EARLY STRENGTH)	710.00	C.Y.				
006	**4.08 BA** CONCRETE CURB (21" DEEP)	1,240.00	L.F.				

NEW YORK CITY DEPARTMENT OF DESIGN AND CONSTRUCTION
DIVISION OF INFRASTRUCTURE - BUREAU OF DESIGN

PROJECT ID: QED1014
CONTRACT PIN: 8502016WM0005C

BID SCHEDULE FORM

COL. 1 SEQ. NO	COL. 2 ITEM NUMBER and DESCRIPTION	COL. 3 ENGINEER'S ESTIMATE OF QUANTITY	COL. 4 UNIT	COL. 5 UNIT PRICE (IN FIGURES) DOLLARS	CTS	COL. 6 EXTENDED AMOUNT (IN FIGURES) DOLLARS	CTS
007	**4.09 AE** STRAIGHT STEEL FACED CONCRETE CURB (21" DEEP)	700.00	L.F.				
008	**4.09 BE** DEPRESSED STEEL FACED CONCRETE CURB (21" DEEP)	145.00	L.F.				
009	**4.09 CE** CORNER STEEL FACED CONCRETE CURB (21" DEEP)	125.00	L.F.				
010	**4.13 AAS** 4" CONCRETE SIDEWALK (UNPIGMENTED)	5,360.00	S.F.				
011	**4.13 ABS** 4" CONCRETE SIDEWALK (PIGMENTED)	2,450.00	S.F.				
012	**4.13 BAS** 7" CONCRETE SIDEWALK (UNPIGMENTED)	900.00	S.F.				

NEW YORK CITY DEPARTMENT OF DESIGN AND CONSTRUCTION
DIVISION OF INFRASTRUCTURE - BUREAU OF DESIGN

PROJECT ID: QED1014
CONTRACT PIN: 8502016WM0005C

BID SCHEDULE FORM

COL. 1 SEQ. NO	COL. 2 ITEM NUMBER and DESCRIPTION	COL. 3 ENGINEER'S ESTIMATE OF QUANTITY	COL. 4 UNIT	COL. 5 UNIT PRICE (IN FIGURES) DOLLARS	CTS	COL. 6 EXTENDED AMOUNT (IN FIGURES) DOLLARS	CTS
013	4.13 BBS 7" CONCRETE SIDEWALK (PIGMENTED)	700.00	S.F.				
014	4.13 DE EMBEDDED PREFORMED DETECTABLE WARNING UNITS	200.00	S.F.				
015	4.13 DSA SURFACE APPLIED DETECTABLE WARNING UNITS	130.00	S.F.				
016	4.15 TOPSOIL	40.00	C.Y.				
017	4.16 AA TREES REMOVED (4" TO UNDER 12" CALIPER)	11.00	EACH				
018	4.16 AB TREES REMOVED (12" TO UNDER 18" CALIPER)	4.00	EACH				

NEW YORK CITY DEPARTMENT OF DESIGN AND CONSTRUCTION
DIVISION OF INFRASTRUCTURE - BUREAU OF DESIGN

PROJECT ID: QED1014
CONTRACT PIN: 8502016WM0005C

BID SCHEDULE FORM

COL. 1 SEQ. NO	COL. 2 ITEM NUMBER and DESCRIPTION	COL. 3 ENGINEER'S ESTIMATE OF QUANTITY	COL. 4 UNIT	COL. 5 UNIT PRICE (IN FIGURES) DOLLARS	CTS	COL. 6 EXTENDED AMOUNT (IN FIGURES) DOLLARS	CTS
019	**4.16 AC** TREES REMOVED (18" TO UNDER 24" CALIPER)	2.00	EACH				
020	**4.16 AD** TREES REMOVED (24" CALIPER AND OVER)	1.00	EACH				
021	**4.16 BA505** TREES PLANTED, 2-1/2" TO 3" CALIPER, ALL TYPES, IN 5' X 5' TREE PITS	50.00	EACH				
022	**4.18 A** MAINTENANCE TREE PRUNING (UNDER 12" CAL.)	8.00	EACH				
023	**4.18 B** MAINTENANCE TREE PRUNING (12" TO UNDER 18" CAL.)	1.00	EACH				
024	**4.18 C** MAINTENANCE TREE PRUNING (18" TO UNDER 24" CAL.)	2.00	EACH				

NEW YORK CITY DEPARTMENT OF DESIGN AND CONSTRUCTION
DIVISION OF INFRASTRUCTURE - BUREAU OF DESIGN

PROJECT ID: QED1014
CONTRACT PIN: 8502016WM0005C

BID SCHEDULE FORM

COL. 1 SEQ. NO	COL. 2 ITEM NUMBER and DESCRIPTION	COL. 3 ENGINEER'S ESTIMATE OF QUANTITY	COL. 4 UNIT	COL. 5 UNIT PRICE (IN FIGURES) DOLLARS	CTS	COL. 6 EXTENDED AMOUNT (IN FIGURES) DOLLARS	CTS
025	4.18 D MAINTENANCE TREE PRUNING (24" CAL. AND OVER)	2.00	EACH				
026	4.21 TREE CONSULTANT	500.00	P/HR				
027	50.31CC12 12" E.S.V.P. COMBINED SEWER, ON CONCRETE CRADLE	450.00	L.F.				
028	50.31CC15 15" E.S.V.P. COMBINED SEWER, ON CONCRETE CRADLE	200.00	L.F.				
029	50.72C0300EB0400 RECONSTRUCTION OF EXISTING 3'-0"W X 4'-0"H EGG-SHAPED BRICK COMBINED SEWER USING SHOTCRETE METHOD	160.00	L.F.				
030	51.21S0A1000E STANDARD MANHOLE TYPE A-1 ON EXISTING SEWER	3.00	EACH				

NEW YORK CITY DEPARTMENT OF DESIGN AND CONSTRUCTION
DIVISION OF INFRASTRUCTURE - BUREAU OF DESIGN

PROJECT ID: QED1014
CONTRACT PIN: 8502016WM0005C

BID SCHEDULE FORM

COL. 1 SEQ. NO.	COL. 2 ITEM NUMBER and DESCRIPTION	COL. 3 ENGINEER'S ESTIMATE OF QUANTITY	COL. 4 UNIT	COL. 5 UNIT PRICE (IN FIGURES) DOLLARS	CTS	COL. 6 EXTENDED AMOUNT (IN FIGURES) DOLLARS	CTS
031	51.21S0A1000V STANDARD MANHOLE TYPE A-1	3.00	EACH				
032	51.21S0A2000E STANDARD MANHOLE TYPE A-2 ON EXISTING SEWER	1.00	EACH				
033	51.21S0A2000V STANDARD MANHOLE TYPE A-2	3.00	EACH				
034	51.22RS RECONSTRUCTION OF EXISTING MANHOLE ON EXISTING SHOTCRETED SEWER	2.00	EACH				
035	51.23RF REPLACEMENT OF EXISTING MANHOLE FRAME AND COVER	5.00	EACH				
036	51.41S001 STANDARD CATCH BASIN, TYPE 1	13.00	EACH				

NEW YORK CITY DEPARTMENT OF DESIGN AND CONSTRUCTION
DIVISION OF INFRASTRUCTURE - BUREAU OF DESIGN

PROJECT ID: QED1014
CONTRACT PIN: 8502016WM0005C

BID SCHEDULE FORM

COL. 1 SEQ. NO	COL. 2 ITEM NUMBER and DESCRIPTION	COL. 3 ENGINEER'S ESTIMATE OF QUANTITY	COL. 4 UNIT	COL. 5 UNIT PRICE (IN FIGURES) DOLLARS	CTS	COL. 6 EXTENDED AMOUNT (IN FIGURES) DOLLARS	CTS
037	51.41S003 STANDARD CATCH BASIN, TYPE 3	3.00	EACH				
038	51.42S1SO INCREMENTAL COST OF STANDARD CATCH BASIN TYPE 3 WITH CURB PIECE IN LIEU OF STANDARD CATCH BASIN TYPE 1	3.00	EACH				
039	52.11D12 12" DUCTILE IRON PIPE BASIN CONNECTION	400.00	L.F.				
040	52.31V06C12 6" E.S.V.P. SPUR FOR HOUSE CONNECTION ON 12" E.S.V.P. COMBINED SEWER	40.00	EACH				
041	52.31V06C15 6" E.S.V.P. SPUR FOR HOUSE CONNECTION ON 15" E.S.V.P. COMBINED SEWER	5.00	EACH				
042	52.31V08C12 8" E.S.V.P. SPUR FOR HOUSE CONNECTION ON 12" E.S.V.P. COMBINED SEWER	40.00	EACH				

NEW YORK CITY DEPARTMENT OF DESIGN AND CONSTRUCTION
DIVISION OF INFRASTRUCTURE - BUREAU OF DESIGN

PROJECT ID: QED1014
CONTRACT PIN: 8502016WM0005C

BID SCHEDULE FORM

COL. 1 SEQ. NO.	COL. 2 ITEM NUMBER and DESCRIPTION	COL. 3 ENGINEER'S ESTIMATE OF QUANTITY	COL. 4 UNIT	COL. 5 UNIT PRICE (IN FIGURES) DOLLARS	CTS	COL. 6 EXTENDED AMOUNT (IN FIGURES) DOLLARS	CTS
043	52.31V08C15 8" E.S.V.P. SPUR FOR HOUSE CONNECTION ON 15" E.S.V.P. COMBINED SEWER	5.00	EACH				
044	52.41D06R 6" D.I.P. HOUSE CONNECTION DRAIN ON CONCRETE CRADLE (RECONNECTION)	75.00	L.F.				
045	52.41D08R 8" D.I.P. HOUSE CONNECTION DRAIN ON CONCRETE CRADLE (RECONNECTION)	125.00	L.F.				
046	52.41V06R 6" E.S.V.P. HOUSE CONNECTION DRAIN ON CONCRETE CRADLE (RECONNECTION)	125.00	L.F.				
047	52.41V08R 8" E.S.V.P. HOUSE CONNECTION DRAIN ON CONCRETE CRADLE (RECONNECTION)	125.00	L.F.				
048	53.11DR TELEVISION INSPECTION AND DIGITAL AUDIO-VISUAL RECORDING OF SEWERS	1,300.00	L.F.				

NEW YORK CITY DEPARTMENT OF DESIGN AND CONSTRUCTION
DIVISION OF INFRASTRUCTURE - BUREAU OF DESIGN

PROJECT ID: QED1014
CONTRACT PIN: 8502016WM0005C

BID SCHEDULE FORM

COL. 1 SEQ. NO	COL. 2 ITEM NUMBER and DESCRIPTION	COL. 3 ENGINEER'S ESTIMATE OF QUANTITY	COL. 4 UNIT	COL. 5 UNIT PRICE (IN FIGURES) DOLLARS	CTS	COL. 6 EXTENDED AMOUNT (IN FIGURES) DOLLARS	CTS
049	54.11SC SEWER CLEANING	160.00	L.F.				
050	54.21PC PORTLAND CEMENT (TYPE V) - INJECTION GROUTING	100.00	BAGS				
051	54.31SR SHOTCRETE FOR REPAIR WORK	500.00	C.F.				
052	6.02 AAN UNCLASSIFIED EXCAVATION	801.00	C.Y.				
053	6.02 XSCW INCREMENTAL COST FOR USING SPECIAL CARE WORK METHODS NEAR (FROM 3 FEET TO 50 FEET) TRANSIT FACILITIES	130.00	C.Y.				
054	6.25 RS TEMPORARY SIGNS	3,330.00	S.F.				

NEW YORK CITY DEPARTMENT OF DESIGN AND CONSTRUCTION
DIVISION OF INFRASTRUCTURE - BUREAU OF DESIGN

PROJECT ID: QED1014
CONTRACT PIN: 8502016WM0005C

BID SCHEDULE FORM

COL. 1 SEQ. NO.	COL. 2 ITEM NUMBER and DESCRIPTION	COL. 3 ENGINEER'S ESTIMATE OF QUANTITY	COL. 4 UNIT	COL. 5 UNIT PRICE (IN FIGURES) DOLLARS	CTS	COL. 6 EXTENDED AMOUNT (IN FIGURES) DOLLARS	CTS
055	6.26 TIMBER CURB	7,610.00	L.F.				
056	6.28 AA LIGHTED TIMBER BARRICADES	2,000.00	L.F.				
057	6.34 ACT TEMPORARY CHAIN LINK FENCE, 6'-0" HIGH	9,035.00	L.F.				
058	6.34 ACTP TEMPORARY CHAIN LINK FENCE, 6'-0" HIGH (WITH TOP AND BOTTOM RAILS AND POSTS MOUNTED ON STEEL PLATES)	9,035.00	L.F.				
059	6.40 D ENGINEER'S FIELD OFFICE (TYPE D)	30.00	MONTH				
060	6.44 THERMOPLASTIC REFLECTORIZED PAVEMENT MARKINGS (4" WIDE)	20,830.00	L.F.				

NEW YORK CITY DEPARTMENT OF DESIGN AND CONSTRUCTION
DIVISION OF INFRASTRUCTURE - BUREAU OF DESIGN

PROJECT ID: QED1014
CONTRACT PIN: 8502016WM0005C

BID SCHEDULE FORM

COL. 1 SEQ. NO	COL. 2 ITEM NUMBER and DESCRIPTION	COL. 3 ENGINEER'S ESTIMATE OF QUANTITY	COL. 4 UNIT	COL. 5 UNIT PRICE (IN FIGURES) DOLLARS	CTS	COL. 6 EXTENDED AMOUNT (IN FIGURES) DOLLARS	CTS
061	6.49 TEMPORARY PAVEMENT MARKINGS (4" WIDE)	17,955.00	L.F.				
062	6.50 CLEANING OF DRAINAGE STRUCTURES	1.00	EACH				
063	6.52 CG CROSSING GUARD	7,080.00	P/HR				
064	6.53 REMOVE EXISTING LANE MARKINGS (4" WIDE)	17,955.00	L.F.				
065	6.59 P TEMPORARY CONCRETE BARRIER	10,385.00	L.F.				
066	6.87 PLASTIC BARRELS	2,080.00	EACH				

NEW YORK CITY DEPARTMENT OF DESIGN AND CONSTRUCTION
DIVISION OF INFRASTRUCTURE - BUREAU OF DESIGN

PROJECT ID: QED1014
CONTRACT PIN: 8502016WM0005C

BID SCHEDULE FORM

COL 1 SEQ. NO	COL 2 ITEM NUMBER and DESCRIPTION	COL 3 ENGINEER'S ESTIMATE OF QUANTITY	COL 4 UNIT	COL 5 UNIT PRICE (IN FIGURES) DOLLARS	CTS.	COL 6 EXTENDED AMOUNT (IN FIGURES) DOLLARS	CTS.
067	**60.11R520** FURNISHING AND DELIVERING 20-INCH DUCTILE IRON RESTRAINED JOINT PIPE (CLASS 55)	100.00	L.F.				
068	**60.11R606** FURNISHING AND DELIVERING 6-INCH DUCTILE IRON RESTRAINED JOINT PIPE (CLASS 56)	480.00	L.F.				
069	**60.11R608** FURNISHING AND DELIVERING 8-INCH DUCTILE IRON RESTRAINED JOINT PIPE (CLASS 56)	120.00	L.F.				
070	**60.11R612** FURNISHING AND DELIVERING 12-INCH DUCTILE IRON RESTRAINED JOINT PIPE (CLASS 56)	420.00	L.F.				
071	**60.12D06** LAYING 6-INCH DUCTILE IRON PIPE AND FITTINGS	550.00	L.F.				
072	**60.12D08** LAYING 8-INCH DUCTILE IRON PIPE AND FITTINGS	135.00	L.F.				

NEW YORK CITY DEPARTMENT OF DESIGN AND CONSTRUCTION
DIVISION OF INFRASTRUCTURE - BUREAU OF DESIGN

PROJECT ID: QED1014
CONTRACT PIN: 8502016WM0005C

BID SCHEDULE FORM

COL. 1 SEQ. NO	COL. 2 ITEM NUMBER and DESCRIPTION	COL. 3 ENGINEER'S ESTIMATE OF QUANTITY	COL. 4 UNIT	COL. 5 UNIT PRICE (IN FIGURES) DOLLARS	CTS	COL. 6 EXTENDED AMOUNT (IN FIGURES) DOLLARS	CTS
073	**60.12D12** LAYING 12-INCH DUCTILE IRON PIPE AND FITTINGS	495.00	L.F.				
074	**60.12D20** LAYING 20-INCH DUCTILE IRON PIPE AND FITTINGS	130.00	L.F.				
075	**60.13M0A24** FURNISHING AND DELIVERING DUCTILE IRON MECHANICAL JOINT 24 -INCH DIAMETER AND SMALLER FITTINGS, INCLUDING WEDGE TYPE RETAINER GLANDS	11.00	TONS				
076	**60.21SP4T48** FURNISHING, DELIVERING AND LAYING 48-INCH STRAIGHT STEEL PIPE, 1/2-INCH WALL THICKNESS	100.00	L.F.				
077	**60.21SP4T52** FURNISHING, DELIVERING AND LAYING 52-INCH STRAIGHT STEEL PIPE, 1/2-INCH WALL THICKNESS	1,250.00	L.F.				
078	**60.21SP5T60** FURNISHING, DELIVERING AND LAYING 60-INCH STRAIGHT STEEL PIPE, 5/8-INCH WALL THICKNESS	50.00	L.F.				

NEW YORK CITY DEPARTMENT OF DESIGN AND CONSTRUCTION
DIVISION OF INFRASTRUCTURE - BUREAU OF DESIGN

PROJECT ID: QED1014
CONTRACT PIN: 8502016WM0005C

BID SCHEDULE FORM

COL. 1 SEQ. NO	COL. 2 ITEM NUMBER and DESCRIPTION	COL. 3 ENGINEER'S ESTIMATE OF QUANTITY	COL. 4 UNIT	COL. 5 UNIT PRICE (IN FIGURES) DOLLARS	CTS	COL. 6 EXTENDED AMOUNT (IN FIGURES) DOLLARS	CTS
079	**60.21SP6T72** FURNISHING, DELIVERING AND LAYING 72-INCH STRAIGHT STEEL PIPE, 3/4-INCH WALL THICKNESS	200.00	L.F.				
080	**60.22BR4T52** FURNISHING, DELIVERING AND LAYING 52-INCH STEEL BENDS AND REDUCERS, 1/2-INCH WALL THICKNESS	75.00	L.F.				
081	**60.22BR5T60** FURNISHING, DELIVERING AND LAYING 60-INCH STEEL BENDS AND REDUCERS, 5/8-INCH WALL THICKNESS	7.00	L.F.				
082	**60.22BR6T72** FURNISHING, DELIVERING AND LAYING 72-INCH STEEL BENDS AND REDUCERS, 3/4-INCH WALL THICKNESS	60.00	L.F.				
083	**60.23ST48T52** FURNISHING, DELIVERING AND INSTALLING 52-INCH X 48-INCH STEEL TEE	1.00	EACH				
084	**60.25PSO** FURNISHING, DELIVERING AND INSTALLING PLATE STEEL OUTLETS ON STEEL PIPE, ACCESS MANHOLE OUTLETS WITH COVERS, AND NUTS AND BOLTS COMPLETE	34,200.00	LBS.				

NEW YORK CITY DEPARTMENT OF DESIGN AND CONSTRUCTION
DIVISION OF INFRASTRUCTURE - BUREAU OF DESIGN

PROJECT ID: QED1014
CONTRACT PIN: 8502016WM0005C

BID SCHEDULE FORM

COL. 1 SEQ. NO	COL. 2 ITEM NUMBER and DESCRIPTION	COL. 3 ENGINEER'S ESTIMATE OF QUANTITY	COL. 4 UNIT	COL. 5 UNIT PRICE (IN FIGURES) DOLLARS	CTS	COL. 6 EXTENDED AMOUNT (IN FIGURES) DOLLARS	CTS
085	**60.27RSC48** FURNISHING, DELIVERING AND INSTALLING 48-INCH DIAMETER BOLTED, SPLIT SLEEVE-TYPE RESTRAINED COUPLING	4.00	EACH				
086	**60.29CP** FURNISHING, INSTALLING AND TESTING CORROSION CONTROL AND/OR CATHODIC PROTECTION SYSTEM	1.00	L.S.				
087	**60.61SLM52S** FURNISHING, DELIVERING AND INSTALLING 52-INCH STRAIGHT STEEL WATER MAIN PIPE BY SLIP-LINING METHOD	7,100.00	L.F.				
088	**61.11DFM06** FURNISHING AND DELIVERING 6-INCH FLANGED-MECHANICAL JOINT DUCTILE IRON GATE VALVE COMPLETE WITH WEDGE TYPE RETAINER GLAND	18.00	EACH				
089	**61.11DFM12** FURNISHING AND DELIVERING 12-INCH FLANGED-MECHANICAL JOINT DUCTILE IRON GATE VALVE COMPLETE WITH WEDGE TYPE RETAINER GLAND	1.00	EACH				

NEW YORK CITY DEPARTMENT OF DESIGN AND CONSTRUCTION
DIVISION OF INFRASTRUCTURE - BUREAU OF DESIGN

PROJECT ID: QED1014
CONTRACT PIN: 8502016WM0005C

BID SCHEDULE FORM

COL 1 SEQ. NO	COL 2 ITEM NUMBER and DESCRIPTION	COL 3 ENGINEER'S ESTIMATE OF QUANTITY	COL 4 UNIT	COL 5 UNIT PRICE (IN FIGURES) DOLLARS	CTS	COL 6 EXTENDED AMOUNT (IN FIGURES) DOLLARS	CTS
090	**61.11DFM20** FURNISHING AND DELIVERING 20-INCH FLANGED-MECHANICAL JOINT DUCTILE IRON GATE VALVE COMPLETE WITH WEDGE TYPE RETAINER GLAND	1.00	EACH				
091	**61.11DMM12** FURNISHING AND DELIVERING 12-INCH MECHANICAL JOINT DUCTILE IRON GATE VALVE COMPLETE WITH WEDGE TYPE RETAINER GLANDS	2.00	EACH				
092	**61.11DMM20** FURNISHING AND DELIVERING 20-INCH MECHANICAL JOINT DUCTILE IRON GATE VALVE COMPLETE WITH WEDGE TYPE RETAINER GLANDS	1.00	EACH				
093	**61.11TWC04** FURNISHING AND DELIVERING 4-INCH WET CONNECTION TAPPING VALVE COMPLETE WITH WEDGE TYPE RETAINER GLANDS	5.00	EACH				
094	**61.11TWC06** FURNISHING AND DELIVERING 6-INCH WET CONNECTION TAPPING VALVE COMPLETE WITH WEDGE TYPE RETAINER GLANDS	5.00	EACH				

NEW YORK CITY DEPARTMENT OF DESIGN AND CONSTRUCTION
DIVISION OF INFRASTRUCTURE - BUREAU OF DESIGN

PROJECT ID: QED1014
CONTRACT PIN: 8502016WM0005C

BID SCHEDULE FORM

COL. 1 SEQ. NO	COL. 2 ITEM NUMBER and DESCRIPTION	COL. 3 ENGINEER'S ESTIMATE OF QUANTITY	COL. 4 UNIT	COL. 5 UNIT PRICE (IN FIGURES) DOLLARS	CTS	COL. 6 EXTENDED AMOUNT (IN FIGURES) DOLLARS	CTS
095	**61.11TWC08** FURNISHING AND DELIVERING 8-INCH WET CONNECTION TAPPING VALVE COMPLETE WITH WEDGE TYPE RETAINER GLANDS	3.00	EACH				
096	**61.12DFM06** SETTING 6-INCH FLANGED-MECHANICAL JOINT DUCTILE IRON GATE VALVE COMPLETE WITH WEDGE TYPE RETAINER GLAND	18.00	EACH				
097	**61.12DFM12** SETTING 12-INCH FLANGED-MECHANICAL JOINT DUCTILE IRON GATE VALVE COMPLETE WITH WEDGE TYPE RETAINER GLAND	1.00	EACH				
098	**61.12DFM20** SETTING 20-INCH FLANGED-MECHANICAL JOINT DUCTILE IRON GATE VALVE COMPLETE WITH WEDGE TYPE RETAINER GLAND	1.00	EACH				
099	**61.12DMM12** SETTING 12-INCH MECHANICAL JOINT DUCTILE IRON GATE VALVE COMPLETE WITH WEDGE TYPE RETAINER GLANDS	2.00	EACH				
100	**61.12DMM20** SETTING 20-INCH MECHANICAL JOINT DUCTILE IRON GATE VALVE COMPLETE WITH WEDGE TYPE RETAINER GLANDS	1.00	EACH				

NEW YORK CITY DEPARTMENT OF DESIGN AND CONSTRUCTION
DIVISION OF INFRASTRUCTURE - BUREAU OF DESIGN

PROJECT ID: QED1014
CONTRACT PIN: 8502016WM0005C

BID SCHEDULE FORM

COL. 1 SEQ. NO	COL. 2 ITEM NUMBER and DESCRIPTION	COL. 3 ENGINEER'S ESTIMATE OF QUANTITY	COL. 4 UNIT	COL. 5 UNIT PRICE (IN FIGURES) DOLLARS	CTS	COL. 6 EXTENDED AMOUNT (IN FIGURES) DOLLARS	CTS
101	**61.12TWC04** SETTING 4-INCH WET CONNECTION TAPPING VALVE COMPLETE WITH WEDGE TYPE RETAINER GLANDS	5.00	EACH				
102	**61.12TWC06** SETTING 6-INCH WET CONNECTION TAPPING VALVE COMPLETE WITH WEDGE TYPE RETAINER GLANDS	5.00	EACH				
103	**61.12TWC08** SETTING 8-INCH WET CONNECTION TAPPING VALVE COMPLETE WITH WEDGE TYPE RETAINER GLANDS	3.00	EACH				
104	**61.21BVB48** FURNISHING, DELIVERING AND INSTALLING 48-INCH BUTTERFLY VALVE WITH BY-PASS ARRANGEMENT AND OUTLET, COMPLETE	6.00	EACH				
105	**62.11SD** FURNISHING AND DELIVERING HYDRANTS	9.00	EACH				
106	**62.12SG** SETTING HYDRANTS COMPLETE WITH WEDGE TYPE RETAINER GLANDS	9.00	EACH				

NEW YORK CITY DEPARTMENT OF DESIGN AND CONSTRUCTION
DIVISION OF INFRASTRUCTURE - BUREAU OF DESIGN

PROJECT ID: QED1014
CONTRACT PIN: 8502016WM0005C

BID SCHEDULE FORM

COL. 1 SEQ. NO	COL. 2 ITEM NUMBER and DESCRIPTION	COL. 3 ENGINEER'S ESTIMATE OF QUANTITY	COL. 4 UNIT	COL. 5 UNIT PRICE (IN FIGURES) DOLLARS	CTS	COL. 6 EXTENDED AMOUNT (IN FIGURES) DOLLARS	CTS
107	62.13RH REMOVING HYDRANTS	7.00	EACH				
108	62.14FS FURNISHING, DELIVERING AND INSTALLING HYDRANT FENDERS	27.00	EACH				
109	63.11MH FURNISHING, DELIVERING AND INSTALLING 36-INCH CAST IRON MANHOLE HEADS AND COVERS	12.00	TONS				
110	63.11MS FURNISHING, DELIVERING AND INSTALLING MANHOLE STEPS TYPE PS2-PF	300.00	EACH				
111	63.11VC FURNISHING AND DELIVERING VARIOUS CASTINGS	41.00	TONS				
112	64.11EL WITHDRAWING AND REPLACING HOUSE SERVICES USING 1-1/2-INCH OR LARGER SCREW TAPS	12.00	EACH				

NEW YORK CITY DEPARTMENT OF DESIGN AND CONSTRUCTION
DIVISION OF INFRASTRUCTURE - BUREAU OF DESIGN

PROJECT ID: QED1014
CONTRACT PIN: 8502016WM0005C

BID SCHEDULE FORM

COL 1 SEQ. NO	COL 2 ITEM NUMBER and DESCRIPTION	COL 3 ENGINEER'S ESTIMATE OF QUANTITY	COL 4 UNIT	COL 5 UNIT PRICE (IN FIGURES) DOLLARS	CTS	COL 6 EXTENDED AMOUNT (IN FIGURES) DOLLARS	CTS
113	**64.11ST** WITHDRAWING AND REPLACING HOUSE SERVICES USING SMALLER THAN 1-1/2-INCH SCREW TAPS	12.00	EACH				
114	**64.12COEG** CUTTING AND OFFSETTING HOUSE SERVICE WATER CONNECTIONS (EQUAL TO OR GREATER THAN 3-INCH DIAMETER)	12.00	L.F.				
115	**64.12COLT** CUTTING AND OFFSETTING HOUSE SERVICE WATER CONNECTIONS (LESS THAN 3-INCH DIAMETER)	12.00	L.F.				
116	**64.12ESEG** EXTENDING HOUSE SERVICE WATER CONNECTIONS (EQUAL TO OR GREATER THAN 3-INCH DIAMETER)	12.00	L.F.				
117	**64.12ESLT** EXTENDING HOUSE SERVICE WATER CONNECTIONS (LESS THAN 3-INCH DIAMETER)	12.00	L.F.				
118	**64.13WC08** FURNISHING, DELIVERING AND INSTALLING WET CONNECTION SLEEVE ON 8-INCH WATER MAIN PIPE WITH VARIOUS OUTLETS	3.00	EACH				

NEW YORK CITY DEPARTMENT OF DESIGN AND CONSTRUCTION
DIVISION OF INFRASTRUCTURE - BUREAU OF DESIGN

PROJECT ID: QED1014
CONTRACT PIN: 8502016WM0005C

BID SCHEDULE FORM

COL. 1 SEQ. NO	COL. 2 ITEM NUMBER and DESCRIPTION	COL. 3 ENGINEER'S ESTIMATE OF QUANTITY	COL. 4 UNIT	COL. 5 UNIT PRICE (IN FIGURES) DOLLARS	CTS	COL. 6 EXTENDED AMOUNT (IN FIGURES) DOLLARS	CTS
119	**64.13WC12** FURNISHING, DELIVERING AND INSTALLING WET CONNECTION SLEEVE ON 12-INCH WATER MAIN PIPE WITH VARIOUS OUTLETS	5.00	EACH				
120	**64.13WC20** FURNISHING, DELIVERING AND INSTALLING WET CONNECTION SLEEVE ON 20-INCH WATER MAIN PIPE WITH VARIOUS OUTLETS	5.00	EACH				
121	**65.11BR** FURNISHING, DELIVERING AND INSTALLING BANDS, RODS, WASHERS, ETC., COMPLETE, FOR RESTRAINING JOINTS	225.00	LBS.				
122	**65.21PS** FURNISHING AND PLACING POLYETHYLENE SLEEVE **Unit price bid shall not be less than: $ 0.50**	770.00	L.F.				
123	**65.31FF** FURNISHING, DELIVERING AND PLACING FILTER FABRIC **Unit price bid shall not be less than: $ 0.10**	35,050.00	S.F.				
124	**65.41PS06** FURNISHING, DELIVERING AND INSTALLING 6-INCH PIPE-TO-WALL PENETRATION SEAL, INCLUDING STEEL SLEEVE AND ANCHOR/WATER STOP PLATE	18.00	EACH				

NEW YORK CITY DEPARTMENT OF DESIGN AND CONSTRUCTION
DIVISION OF INFRASTRUCTURE - BUREAU OF DESIGN

PROJECT ID: QED1014
CONTRACT PIN: 8502016WM0005C

BID SCHEDULE FORM

COL 1 SEQ NO	COL 2 ITEM NUMBER and DESCRIPTION	COL 3 ENGINEER'S ESTIMATE OF QUANTITY	COL 4 UND	COL 5 UNIT PRICE (IN FIGURES) DOLLARS	CTS	COL 6 EXTENDED AMOUNT (IN FIGURES) DOLLARS	CTS
125	**65.41PS12** FURNISHING, DELIVERING AND INSTALLING 12-INCH PIPE-TO-WALL PENETRATION SEAL, INCLUDING STEEL SLEEVE AND ANCHOR/WATER STOP PLATE	2.00	EACH				
126	**65.41PS20** FURNISHING, DELIVERING AND INSTALLING 20-INCH PIPE-TO-WALL PENETRATION SEAL, INCLUDING STEEL SLEEVE AND ANCHOR/WATER STOP PLATE	2.00	EACH				
127	**65.41PS48** FURNISHING, DELIVERING AND INSTALLING 48-INCH PIPE-TO-WALL PENETRATION SEAL, INCLUDING STEEL SLEEVE AND ANCHOR/WATER STOP PLATE	9.00	EACH				
128	**65.41PS60** FURNISHING, DELIVERING AND INSTALLING 60-INCH PIPE-TO-WALL PENETRATION SEAL, INCLUDING STEEL SLEEVE AND ANCHOR/WATER STOP PLATE	2.00	EACH				
129	**65.41PS72** FURNISHING, DELIVERING AND INSTALLING 72-INCH PIPE-TO-WALL PENETRATION SEAL, INCLUDING STEEL SLEEVE AND ANCHOR/WATER STOP PLATE	4.00	EACH				

BID SCHEDULE FORM

COL. 1 SEQ. NO.	COL. 2 ITEM NUMBER and DESCRIPTION	COL. 3 ENGINEER'S ESTIMATE OF QUANTITY	COL. 4 UNIT	COL. 5 UNIT PRICE (IN FIGURES) DOLLARS	CTS	COL. 6 EXTENDED AMOUNT (IN FIGURES) DOLLARS	CTS
130	65.51PC FURNISHING AND PLACING CAST-IN-PLACE CONCRETE CLASS 40 AND PRECAST CONCRETE CLASS 50	400.00	C.Y.				
131	65.61SS FURNISHING, DELIVERING AND PLACING STRUCTURAL, REINFORCING AND MISCELLANEOUS STEEL	40,000.00	LBS.				
132	65.71SG FURNISHING, DELIVERING AND PLACING SCREENED GRAVEL OR SCREENED BROKEN STONE BEDDING	325.00	C.Y.				
133	67.11AA48 INCREMENTAL COST FOR ASBESTOS ABATEMENT WORK PERFORMED ON EXISTING 48-INCH DIAMETER STEEL PIPE WATER MAIN TO BE REMOVED, COMPLETE	100.00	L.F.				
134	67.11AA60 INCREMENTAL COST FOR ASBESTOS ABATEMENT WORK PERFORMED ON EXISTING 60-INCH DIAMETER STEEL PIPE WATER MAIN TO BE REMOVED, COMPLETE	130.00	L.F.				

NEW YORK CITY DEPARTMENT OF DESIGN AND CONSTRUCTION
DIVISION OF INFRASTRUCTURE - BUREAU OF DESIGN

PROJECT ID: QED1014
CONTRACT PIN: 8502016WM0005C

BID SCHEDULE FORM

COL. 1 SEQ. NO	COL. 2 ITEM NUMBER and DESCRIPTION	COL. 3 ENGINEER'S ESTIMATE OF QUANTITY	COL. 4 UNIT	COL. 5 UNIT PRICE (IN FIGURES) DOLLARS	CTS	COL. 6 EXTENDED AMOUNT (IN FIGURES) DOLLARS	CTS
135	**67.11AA72** INCREMENTAL COST FOR ASBESTOS ABATEMENT WORK PERFORMED ON EXISTING 72-INCH DIAMETER STEEL PIPE WATER MAIN TO BE REMOVED, COMPLETE	40.00	L.F.				
136	**7.13 B** MAINTENANCE OF SITE **Unit price bid shall not be less than: $ 8,000.00**	24.00	MONTH				
137	**7.36** PEDESTRIAN STEEL BARRICADES	8,845.00	L.F.				
138	**7.88 AA** RODENT INFESTATION SURVEY AND MONITORING **Unit price bid shall not be less than: $ 40,000.00**	1.00	L.S.				
139	**7.88 AB** RODENT BAIT STATIONS **Unit price bid shall not be less than: $ 60.00**	410.00	EACH				
140	**7.88 AC** BAITING OF RODENT BAIT STATIONS **Unit price bid shall not be less than: $ 9.50**	410.00	EACH				

NEW YORK CITY DEPARTMENT OF DESIGN AND CONSTRUCTION
DIVISION OF INFRASTRUCTURE - BUREAU OF DESIGN

PROJECT ID: QED1014
CONTRACT PIN: 8502016WM0005C

BID SCHEDULE FORM

COL. 1 SEQ. NO	COL. 2 ITEM NUMBER and DESCRIPTION	COL. 3 ENGINEER'S ESTIMATE OF QUANTITY	COL. 4 UNIT	COL. 5 UNIT PRICE (IN FIGURES) DOLLARS	CTS	COL. 6 EXTENDED AMOUNT (IN FIGURES) DOLLARS	CTS
141	7.88 AD WATERBUG BAIT APPLICATIONS Unit price bid shall not be less than: $ 65.00	710.00	BLOCK				
142	70.21DK DECKING	3,800.00	S.Y.				
143	70.31FN FENCING Unit price bid shall not be less than: $ 2.00	6,850.00	L.F.				
144	70.51EO EXCAVATION OF BOULDERS IN OPEN CUT Unit price bid shall not be less than: $ 75.00	60.00	C.Y.				
145	70.61RE ROCK EXCAVATION	510.00	C.Y.				
146	70.71SB STONE BALLAST Unit price bid shall not be less than: $ 15.00	10.00	C.Y.				

NEW YORK CITY DEPARTMENT OF DESIGN AND CONSTRUCTION
DIVISION OF INFRASTRUCTURE - BUREAU OF DESIGN

PROJECT ID: QED1014
CONTRACT PIN: 8502016WM0005C

BID SCHEDULE FORM

COL. 1 SEQ. NO	COL. 2 ITEM NUMBER and DESCRIPTION	COL. 3 ENGINEER'S ESTIMATE OF QUANTITY	COL. 4 UNIT	COL. 5 UNIT PRICE (IN FIGURES) DOLLARS	CTS	COL. 6 EXTENDED AMOUNT (IN FIGURES) DOLLARS	CTS
147	**70.81CB** CLEAN BACKFILL **Unit price bid shall not be less than: $ 15.00**	1,150.00	C.Y.				
148	**70.91SW12** FURNISHING AND PLACING SHEETING AND BRACING IN TRENCH FOR WATER MAIN PIPE 12-INCH IN DIAMETER AND LESS	4,000.00	S.F.				
149	**70.91SW20** FURNISHING AND PLACING SHEETING AND BRACING IN TRENCH FOR WATER MAIN PIPE 20-INCH IN DIAMETER	1,450.00	S.F.				
150	**73.11AB** ADDITIONAL BRICK MASONRY **Unit price bid shall not be less than: $ 62.50**	15.00	C.Y.				
151	**73.21AC** ADDITIONAL CONCRETE **Unit price bid shall not be less than: $ 62.50**	42.00	C.Y.				
152	**73.31AE0** ADDITIONAL EARTH EXCAVATION INCLUDING TEST PITS (ALL DEPTHS) **Unit price bid shall not be less than: $ 20.00**	130.00	C.Y.				

NEW YORK CITY DEPARTMENT OF DESIGN AND CONSTRUCTION
DIVISION OF INFRASTRUCTURE - BUREAU OF DESIGN

PROJECT ID: QED1014
CONTRACT PIN: 8502016WM0005C

BID SCHEDULE FORM

COL. 1 SEQ. NO	COL. 2 ITEM NUMBER and DESCRIPTION	COL. 3 ENGINEER'S ESTIMATE OF QUANTITY	COL. 4 UNIT	COL. 5 UNIT PRICE (IN FIGURES) DOLLARS	CTS	COL. 6 EXTENDED AMOUNT (IN FIGURES) DOLLARS	CTS
153	73.41AG ADDITIONAL SELECT GRANULAR BACKFILL **Unit price bid shall not be less than: $ 15.00**	126.00	C.Y.				
154	73.51AS ADDITIONAL STEEL REINFORCING BARS **Unit price bid shall not be less than: $ 1.00**	100.00	LBS.				
155	76.11CR CONSTRUCTION REPORT	1.00	L.S.				
156	76.21MR MONITORING AND POST-CONSTRUCTION REPORT	1.00	L.S.				
157	79.11AATA ALLOWANCE FOR ASBESTOS ABATEMENT WORK PERFORMED ON EXISTING TRANSIT AUTHORITY DUCT INSULATION (REMOVAL OF ACM, REPLACEMENT WITH NON-ACM, AND SUPPORT AND PROTECTION OF EXISTING TRANSIT AUTHORITY DUCT, COMPLETE) **PRICE BID SHALL BE FOR THE FIXED SUM OF $ 4,500.00**	1.00	F.S.	4,500	00	$4,500	00

NEW YORK CITY DEPARTMENT OF DESIGN AND CONSTRUCTION
DIVISION OF INFRASTRUCTURE - BUREAU OF DESIGN

PROJECT ID: QED1014
CONTRACT PIN: 8502016WM0005C

BID SCHEDULE FORM

COL. 1 SEQ. NO	COL. 2 ITEM NUMBER and DESCRIPTION	COL. 3 ENGINEER'S ESTIMATE OF QUANTITY	COL. 4 UNIT	COL. 5 UNIT PRICE (IN FIGURES) DOLLARS	CTS	COL. 6 EXTENDED AMOUNT (IN FIGURES) DOLLARS	CTS
158	**8.01 C1** HANDLING, TRANSPORTING AND DISPOSAL OF NON-HAZARDOUS CONTAMINATED SOIL	6,000.00	TONS				
159	**8.01 C2** SAMPLING AND TESTING OF CONTAMINATED/POTENTIALLY HAZARDOUS SOIL FOR DISPOSAL PURPOSES	15.00	SETS				
160	**8.01 H** HANDLING, TRANSPORTING AND DISPOSAL OF HAZARDOUS SOIL	100.00	TONS				
161	**8.01 S** HEALTH AND SAFETY	1.00	L.S.				
162	**8.01 W1** REMOVAL, TREATMENT, AND DISCHARGE/DISPOSAL OF CONTAMINATED WATER	7.00	DAY				
163	**8.01 W2** SAMPLING AND TESTING OF CONTAMINATED WATER	2.00	SETS				

BID SCHEDULE FORM

COL. 1 SEQ. NO	COL. 2 ITEM NUMBER and DESCRIPTION	COL. 3 ENGINEER'S ESTIMATE OF QUANTITY	COL. 4 UNIT	COL. 5 UNIT PRICE (IN FIGURES) DOLLARS	CTS	COL. 6 EXTENDED AMOUNT (IN FIGURES) DOLLARS	CTS
164	8.08 VARIABLE MESSAGE BOARD	4.00	EACH				
165	9.04 HW ALLOWANCE FOR ANTI-FREEZE ADDITIVE IN CONCRETE PRICE BID SHALL BE FOR THE FIXED SUM OF $ 7,000.00	1.00	F.S.	7,000	00	$7,000	00
166	9.99 FLASHING ARROW BOARD	7.00	EACH				
167	T-1.20 REMOVE TYPE "M" SERIES FOUNDATION	3.00	EACH				
168	T-1.3 INSTALL TYPE "M2-5S" FOUNDATION	3.00	EACH				

NEW YORK CITY DEPARTMENT OF DESIGN AND CONSTRUCTION
DIVISION OF INFRASTRUCTURE - BUREAU OF DESIGN

PROJECT ID: QED1014
CONTRACT PIN: 8502016WM0005C

BID SCHEDULE FORM

COL. 1 SEQ. NO.	COL. 2 ITEM NUMBER and DESCRIPTION	COL. 3 ENGINEER'S ESTIMATE OF QUANTITY	COL. 4 UNIT	COL. 5 UNIT PRICE (IN FIGURES) DOLLARS	CTS	COL. 6 EXTENDED AMOUNT (IN FIGURES) DOLLARS	CTS
169	T-2.24 REMOVE TYPE "M" SERIES POST	3.00	EACH				
170	T-2.28 REMOVE MAST ARM FROM ANY POST	1.00	EACH				
171	T-2.32 INSTALL STREET LIGHT LUMINAIRE SUPPORT ARM ON "M-2" POST	1.00	EACH				
172	T-2.4 INSTALL TYPE "M-2" POST	3.00	EACH				
173	T-20220 c) FURNISH 1-1/4" ANCHOR BOLT ASSEMBLIES FOR M-2 (EACH) (4 REQUIRED PER POST)	12.00	EACH				
174	T-3.1 INSTALL "ONE-WAY" SIGNAL UNIT ON MAST ARM OR TOP OF TRAFFIC POST	9.00	EACH				

NEW YORK CITY DEPARTMENT OF DESIGN AND CONSTRUCTION
DIVISION OF INFRASTRUCTURE - BUREAU OF DESIGN

PROJECT ID: QED1014
CONTRACT PIN: 8502016WM0005C

BID SCHEDULE FORM

COL. 1 SEQ. NO	COL. 2 ITEM NUMBER and DESCRIPTION	COL. 3 ENGINEER'S ESTIMATE OF QUANTITY	COL. 4 UNIT	COL. 5 UNIT PRICE (IN FIGURES) DOLLARS	CTS	COL. 6 EXTENDED AMOUNT (IN FIGURES) DOLLARS	CTS
175	T-3.12 FURNISH AND INSTALL LOUVERS ON SIGNAL UNIT	1.00	EACH				
176	T-3.18 REMOVE SIGNAL HEAD FROM ANY TYPE POST	3.00	EACH				
177	T-3.21 REMOVE PEDESTRIAN SIGNAL OR SIGN UNIT OR OTHER ILLUMINATED SIGNS FROM ANY POST	6.00	EACH				
178	T-3.6 INSTALL PEDESTRIAN SIGNAL ON ANY TYPE POST	6.00	EACH				
179	T-30013L FURNISH ADJUSTABLE 3 SECTION 1-WAY, DIE CAST ALUMINUM TRAFFIC SIGNALS 8" - W/LED LENS	9.00	EACH				
180	T-31210 h) "HUB" ASSEMBLY *ASSEMBLY IS EQUAL TO ONE PAIR	3.00	EACH				

NEW YORK CITY DEPARTMENT OF DESIGN AND CONSTRUCTION
DIVISION OF INFRASTRUCTURE - BUREAU OF DESIGN

PROJECT ID: QED1014
CONTRACT PIN: 8502016WM0005C

BID SCHEDULE FORM

COL. 1 SEQ. NO	COL. 2 ITEM NUMBER and DESCRIPTION	COL. 3 ENGINEER'S ESTIMATE OF QUANTITY	COL. 4 UNIT	COL. 5 UNIT PRICE (IN FIGURES) DOLLARS	CTS	COL. 6 EXTENDED AMOUNT (IN FIGURES) DOLLARS	CTS
181	T-31225 c) "3MS"	3.00	EACH				
182	T-31351 g) "VB-2P" ASSEMBLY *ASSEMBLY IS EQUAL TO ONE PAIR	3.00	EACH				
183	T-33000L FURNISH POLYCARBONATE INCANDESCENT PED SIGNAL W/LED LENS	4.00	EACH				
184	T-33001-L FURNISH POLYCARBONATE PEDESTRIAN SIGNAL (16 X 16) W/LED COUNT LENS (SPECIFICATION A-L)	2.00	EACH				
185	T-4.22 INSTALL ANY TYPE OF ADVANCED SOLID STATE TRAFFIC SIGNAL CONTROLLER AND CABINET ON METAL POLE	1.00	EACH				
186	T-4.8 REMOVE ONE CONTROL BOX AND CONTROLLER FROM ANY POST OR SUPPORT	1.00	EACH				

NEW YORK CITY DEPARTMENT OF DESIGN AND CONSTRUCTION
DIVISION OF INFRASTRUCTURE - BUREAU OF DESIGN

PROJECT ID: QED1014
CONTRACT PIN: 8502016WM0005C

BID SCHEDULE FORM

COL. 1 SEQ. NO	COL. 2 ITEM NUMBER and DESCRIPTION	COL. 3 ENGINEER'S ESTIMATE OF QUANTITY	COL. 4 UNIT	COL. 5 UNIT PRICE (IN FIGURES) DOLLARS	CTS	COL. 6 EXTENDED AMOUNT (IN FIGURES) DOLLARS	CTS
187	T-5.1 FURNISH AND INSTALL 2" RIGID UNDERGROUND CONDUIT IN UNPAVED ROADWAY	50.00	L.F.				
188	T-5.2 FURNISH AND INSTALL 2" RIGID UNDERGROUND CONDUIT IN PAVED ROADWAY	200.00	L.F.				
189	T-5.32 RESTORING PERMANENT ROADWAY (INCLUDING SAWCUT)	200.00	L.F.				
190	T-5.7 FURNISH AND INSTALL ADDITIONAL 2" RIGID UNDERGROUND CONDUIT	20.00	L.F.				
191	T-6.1 INSTALL CABLE (INCLUDES OVERHEAD)	1,000.00	L.F.				
192	T-6.10 REMOVE CABLE (INCLUDES OVERHEAD)	1,400.00	L.F.				

NEW YORK CITY DEPARTMENT OF DESIGN AND CONSTRUCTION
DIVISION OF INFRASTRUCTURE - BUREAU OF DESIGN

PROJECT ID: QED1014
CONTRACT PIN: 8502016WM0005C

BID SCHEDULE FORM

COL. 1 SEQ. NO	COL. 2 ITEM NUMBER and DESCRIPTION	COL. 3 ENGINEER'S ESTIMATE OF QUANTITY	COL. 4 UNIT	COL. 5 UNIT PRICE (IN FIGURES) DOLLARS	CTS	COL. 6 EXTENDED AMOUNT (IN FIGURES) DOLLARS	CTS
193	**T-6.2** INSTALL MULTIPLE CABLE (INCLUDES OVERHEAD)	1,400.00	L.F.				
194	**T-60000B** FURNISH 2 c # 10B (BREAKDOWN = 2#10 WITH 3RD WIRE FOR GROUNDING).	1,500.00	L.F.				
195	**T-60040** c) 7 CONDUCTOR, 14 A.W.G.	800.00	L.F.				
196	**T-60190** e) 13 CONDUCTOR, 14 A.W.G.	1,800.00	L.F.				
197	**T-7.14** INSTALL PEDESTRIAN PUSHBUTTON AND PUSHBUTTON SIGN ON ANY POST	1.00	EACH				
198	**T-7.45** REMOVE PEDESTRIAN PUSHBUTTON AND PUSHBUTTON SIGN	1.00	EACH				

NEW YORK CITY DEPARTMENT OF DESIGN AND CONSTRUCTION
DIVISION OF INFRASTRUCTURE - BUREAU OF DESIGN

PROJECT ID: QED1014
CONTRACT PIN: 8502016WM0005C

BID SCHEDULE FORM

COL. 1 SEQ. NO	COL. 2 ITEM NUMBER and DESCRIPTION	COL. 3 ENGINEER'S ESTIMATE OF QUANTITY	COL. 4 UNIT	COL. 5 UNIT PRICE (IN FIGURES) DOLLARS	CTS	COL. 6 EXTENDED AMOUNT (IN FIGURES) DOLLARS	CTS
199	**T-8.10** RELOCATE CONCRETE PYLON WITH POST	3.00	EACH				
200	**T-8.8** INSTALL CONCRETE PYLON	3.00	EACH				
201	**T-8.9** REMOVE CONCRETE PYLON	3.00	EACH				
202	**T-81000** FURNISH CONCRETE PYLON	3.00	EACH				
203	**UTL-6.01.1** GAS MAIN CROSSING SEWER UP TO 24" IN DIAMETER (S6.01) **Unit price bid shall not be less than: $ 1,040.00**	4.00	EACH				
204	**UTL-6.01.12** GAS MAIN CROSSING WATER MAIN 48" THRU 54" IN DIAMETER (S6.01) **Unit price bid shall not be less than: $ 810.00**	6.00	EACH				

NEW YORK CITY DEPARTMENT OF DESIGN AND CONSTRUCTION
DIVISION OF INFRASTRUCTURE - BUREAU OF DESIGN

PROJECT ID: QED1014
CONTRACT PIN: 8502016WM0005C

BID SCHEDULE FORM

COL. 1 SEQ. NO	COL. 2 ITEM NUMBER and DESCRIPTION	COL. 3 ENGINEER'S ESTIMATE OF QUANTITY	COL. 4 UNIT	COL. 5 UNIT PRICE (IN FIGURES) DOLLARS	CTS	COL. 6 EXTENDED AMOUNT (IN FIGURES) DOLLARS	CTS
205	**UTL-6.01.8** GAS SERVICES CROSSING TRENCHES AND/OR EXCAVATIONS (S6.01) **Unit price bid shall not be less than: $ 465.00**	5.00	EACH				
206	**UTL-6.02** EXTRA EXCAVATION FOR THE INSTALLATION OF CATCH BASIN SEWER DRAIN PIPES WITH GAS INTERFERENCES (S6.02) **Unit price bid shall not be less than: $ 715.00**	4.00	EACH				
207	**UTL-6.03** REMOVAL OF ABANDONED GAS FACILITIES. ALL SIZES. (S6.03) **Unit price bid shall not be less than: $ 15.00**	370.00	L.F.				
208	**UTL-6.03.1A** REMOVAL OF ABANDONED GAS FACILITIES WITH POSSIBLE COAL TAR WRAP. ALL SIZES. (FOR CON EDISON WORK ONLY) (S6.03) **Unit price bid shall not be less than: $ 25.00**	50.00	L.F.				
209	**UTL-6.04** ADJUST HARDWARE TO GRADE USING SPACER RINGS/ADAPTORS. (STREET REPAVING.) (S6.04) **Unit price bid shall not be less than: $ 35.00**	5.00	EACH				
210	**UTL-6.05** ADJUST HARDWARE TO GRADE BY RESETTING. (ROAD RECONSTRUCTION.) (S6.05) **Unit price bid shall not be less than: $ 65.00**	5.00	EACH				

NEW YORK CITY DEPARTMENT OF DESIGN AND CONSTRUCTION
DIVISION OF INFRASTRUCTURE - BUREAU OF DESIGN

PROJECT ID: QED1014
CONTRACT PIN: 8502016WM0005C

BID SCHEDULE FORM

COL. 1 SEQ. NO	COL. 2 ITEM NUMBER and DESCRIPTION	COL. 3 ENGINEER'S ESTIMATE OF QUANTITY	COL. 4 UNIT	COL. 5 UNIT PRICE (IN FIGURES) DOLLARS	CTS	COL. 6 EXTENDED AMOUNT (IN FIGURES) DOLLARS	CTS
211	UTL-6.06 SPECIAL CARE EXCAVATION AND BACKFILLING (S6.06) **Unit price bid shall not be less than: $ 180.00**	100.00	C.Y.				
212	UTL-6.07 TEST PITS FOR GAS FACILITIES (S6.07) **Unit price bid shall not be less than: $ 100.00**	40.00	C.Y.				
213	UTL-GCS-2WS GAS INTERFERENCES AND ACCOMMODATIONS **PRICE BID SHALL BE FOR THE FIXED SUM OF $ 50,000.00**	1.00	F.S.	50,000	00	$50,000	00

SUB-TOTAL: $ _____

214	6.39 A MOBILIZATION **BID PRICE OF MOBILIZATION SHALL NOT EXCEED 4% OF THE ABOVE SUB-TOTAL PRICE.**	1.00	L.S.				

NEW YORK CITY DEPARTMENT OF DESIGN AND CONSTRUCTION
DIVISION OF INFRASTRUCTURE - BUREAU OF DESIGN

PROJECT ID: QED1014
CONTRACT PIN: 8502016WM0005C

BID SCHEDULE FORM

COL. 1 SEQ. NO	COL. 2 ITEM NUMBER and DESCRIPTION	COL. 3 ENGINEER'S ESTIMATE OF QUANTITY	COL. 4 UNIT	COL. 5 UNIT PRICE (IN FIGURES) DOLLARS	CTS	COL. 6 EXTENDED AMOUNT (IN FIGURES) DOLLARS	CTS

TOTAL BID PRICE: $ _____

PLEASE BE SURE A LEGIBLE BID IS ENTERED FOR EACH ITEM.
THE BIDDER SHALL INSERT THE TOTAL BID PRICE IN
THE BID FORM ON PAGE C-4 OF THIS BID BOOKLET.

Tax ID #: _____

APT E-PIN #: 85016B0110

SCHEDULE B – M/WBE Utilization Plan
Part I: M/WBE Participation Goals

Part I to be completed by contracting agency

Contract Overview

APT E- Pin #	85016B0110	**FMS Project ID#:**	QED-1014
Project Title/ Agency PIN #	REHABILITATION OF EXISTING TRUNK WATER MAINS / 8502016WM0005C		
Bid/Proposal Response Date	JUNE 2, 2016		
Contracting Agency	Department of Design and Construction		
Agency Address	30-30 Thomson Avenue **City** Long Island City **State** NY **Zip Code** 11101		
Contact Person	Lea Case	**Title**	MWBE Liaison & Compliance Analyst
Telephone #	(718) 391-1003	**Email**	casele@ddc.nyc.gov

Project Description *(attach additional pages if necessary)*

PROJECT ID: QED1014

REHABILITATION OF EXISTING TRUNK WATER MAINS IN CRESCENT STREET FROM 34TH AVENUE TO 31ST AVENUE; 31ST AVENUE FROM CRESCENT STREET TO 41ST STREET; AND 41ST STREET FROM 31ST AVENUE TO 25TH AVENUE

INCLUDING DISTRIBUTION WATER MAIN, SEWER AND TRAFFIC SIGNAL WORK

Together With All Work Incidental Thereto
BOROUGH OF QUEENS
CITY OF NEW YORK

M/WBE Participation Goals for Services
Enter the percentage amount for each group or for an unspecified goal. Please note that there are no goals for Asian Americans in Professional Services.

Prime Contract Industry: Construction

Group	Percentage	
Unspecified*	9%	
or		
Black American	UNSPECIFIED*	
Hispanic American	UNSPECIFIED*	
Asian American	UNSPECIFIED*	
Women	UNSPECIFIED*	
Total Participation Goals	9%	Line 1

**Note: For this procurement, individual ethnicity and gender goals are not specified. The Total Participation Goal for construction contracts may be met by using either Black-American, Hispanic-American, Asian American, or Women certified firms or any combination of such firms.*

NYC DDC QED 1014
CP System Survey and Engineering Study of Soils and Stray Currents Cathodic Protection System Design

Prepared For:

NYC Department of Design and Construction
30-30 Thomson Ave
Long Island City, NY 11101

Prepared By:

CorrTech, Inc.
25 South Street
Hopkinton, MA 01748
CorrTech, Inc. Report No. 8284-4681
NYC DDC Task Order 023

May 2016

STATEMENT OF LIMITATION

The conclusions presented in this document are based on the services described and not on tasks or procedures beyond the scope of the described procedures or the time and budgetary constraints imposed by the contract limitations.

CorrTech, Inc. has performed this assessment in a professional manner using that degree of skill and care exercised for similar projects under similar conditions by reputable and competent consultants, and in accordance with the procedures established within CorrTech's quality assurance, quality control protocol.

CorrTech, Inc. shall not be responsible for conditions or consequences arising from relevant facts that were concealed, withheld or not fully disclosed at the time the evaluation was performed.

CORROSION NACE SCOTT H. PAUL 4163 SPECIALIST

Report Reviewed by:
Scott Paul, P.E.
NACE Corrosion Specialist No. 4163
May 2016

Report Prepared by:
Ted Midura, P.E.
NACE Cathodic Protection Technician No. 31210

Table of Contents

INTRODUCTION

On June 28th, 2011, CorrTech, Inc. entered into agreement with the NYC Department of Design and Construction with the expectation of providing cathodic protection design, construction support, field testing, final system testing, and as-built documentation. The QED 1014 project is located in Queens, New York, along Crescent St, 31st Ave, and 41st St. It is estimated that approximately 7993 linear feet of 52-in steel pipe and associated fittings are to be installed under this contract. Approximately 6,902-ft of pipe is being slip line inserted and 1,091-ft is direct bury pipe. Approximately 65-ft of 48-in; 158-ft of 72-in; and 50-ft of 20-in piping is also to be installed as part of this system. These segments of pipe, isolated at all ends, will be protected by a cathodic protection system designed by CorrTech. Work is being completed under CorrTech, Inc. Job No. 8284, Task 023, and issued under contract GEDRC001, registration number 20121401831.

Field testing was performed on May 3, 2016 in order to obtain soil resistivity data and to perform stray current monitoring in the approximate areas in which the new steel water main is to be installed. During this visit, testing was completed in specific areas associated with the route of the new piping system. Data collected has been used to design the sacrificial cathodic protection system. In addition to the field testing, a cursory review of area utilities was completed.

CorrTech, Inc. provides corrosion engineering expertise in accordance with specifications section 5.04A. Furnishing, installing and testing corrosion control and/or cathodic protection System was done in accordance with New York City Department of Environmental Protection (NYCDEP) "Specifications for Trunk Main Work".[1]

CONCLUSION

Based on the field testing protocol and test results obtained during the system evaluation and energization, the following conclusions are presented:

1. The average soil resistivity measured along the construction route was found to be approximately 11,607 ohm-cm. Measured values ranged from 2,000 ohm-cm to 24,000 ohm-cm. The soil resistivity study indicates that the area soils are classified as mildly less corrosive to metallic structures. Steel piping installed in this area will require corrosion control measures that will include a bonded polyurethane external dielectric coating system, host pipe grouting and sacrificial anode cathodic protection that will provide adequate corrosion control for in excess of 90 years.

2. Stray current effects measured along the construction route are considered to be significant. The magnitude of variations observed near the rail crossing, clearly indicates the existence of dynamic stray DC voltage effects.

[1] This publication includes "Special Provisions for Trunk Main Work"; and "Specification for Furnishing, Delivering and Laying Steel Pipe and Appurtenances".

RECOMMENDATIONS

While the soils in the area are considered mildly corrosive, the effect of dynamic stray current and minimum life expectancy of 50 years must be considered. In order to protect against passive corrosion and active corrosion caused by stray current, the newly installed steel pipe should be installed with an external coating system, electrical isolation, and sacrificial anode type cathodic protection system. The following are required for the system to function as designed:

1. Flange isolation assemblies are required where the new steel pipe connects to existing piping. Insulating flanges must also be installed at all butterfly valve chambers and at any/all ductile iron or cast iron main connections. These have been indicated on the design drawings

2. The new steel piping must have a high quality dielectric coating, such as the polyurethane coating system, for any and all steel pipe surfaces that are in contact with the surrounding soil and host pipe grout environment. The dielectric coating system should be applied to all piping associated with the air cock hydrants and blow-off assemblies.

3. Sacrificial magnesium anodes, permanent reference electrodes, pipe test wires, steel counter electrodes and flush-to-grade test stations at the locations indicated on the design drawings must be installed adjacent to the direct-buried piping, as per design drawings. All test stations must be installed on the inside of nearby curbs in order to prevent the enclosures from being subject to vehicular traffic and to make them easier to locate for future testing.

4. FRP shields must be installed around the pipe at any/all points of contact with reinforced concrete piles or similar structures. Electrical isolation between the new steel piping and other structures is of critical importance.

5. Casing spacers shall be utilized to provide dielectric separation between the existing 60-in lock bar steel host pipe and new 52-in insertion slip line pipe.

6. Electrical isolation must be monitored during installation. Any values less than 500-ohms shall be resolved before proceeding with additional pipe slip lining.

7. Final testing shall be performed by CorrTech personnel in concert with the REI team. Testing must verify that the installed cathodic protection system meets the criteria set forth by NACE International Standard Practice SP0169, which requires control of external corrosion on underground or submerged metallic piping systems at all locations.

8. Based on the cathodic protection design worksheets and pipe network, the following table summarizes the direct-buried pipe segments for QED 1014:

Pipe Segment	Location and Description	No of Anodes	No of Anode Test Stations
1	CRESCENT ST BETWEEN 34TH AVE AND 33RD AVE	7	1
2	CRESCENT ST BETWEEN 33RD AVE AND BROADWAY	7	1
3	CRESCENT ST AND 31ST ROAD	10	1
4	CRESCENT ST BETWEEN 31ST ROAD AND 31ST AVE	13	1
5	CORNER OF CRESCENT ST AND 31ST AVE	45	1
6	31ST AVE BETWEEN 29TH ST AND 30TH ST	10	1
7A	31ST AVE BETWEEN 30TH ST AND 31ST ST	12	1
7B	31ST AVE BETWEEN 30TH ST AND 31ST ST	12	1
8	31ST AVE BETWEEN 31ST ST AND 32ND ST	6	1
9	31ST AVE BETWEEN 32ND ST AND 33RD ST	10	1
10	31ST AVE BETWEEN 35TH ST AND 36TH ST	10	1
11	31ST AVE BETWEEN 37TH ST AND 38TH ST	5	1
12	31ST AVE BETWEEN STEINWAY ST AND 41ST ST	10	1
13	CORNER OF 31ST AVE AND 41ST ST	30	1
14A	41ST ST BETWEEN NEWTOWN RD AND 30TH AVE	14	1
14B	41ST ST BETWEEN NEWTOWN RD AND 30TH AVE	14	1
15	41ST ST AT 28TH AVE	15	1
16	41ST ST BETWEEN 28TH AVE AND 25TH AVE	10	1
17	41ST ST AT 25TH AVE	40	1
18	41ST ST AT 25TH AVE	8	1
19	41ST ST AT 25TH AVE	4	1
	TOTAL	**292**	**21**

DISCUSSION

The coated steel water main piping associated with project QED 1014 consists of 52-inch slip line, and open trench steel water main. Testing was completed in and around Crescent Street, 31st Ave, and 41st St, following the layout of the piping system.

The purpose of the pre-constructing testing and subsequent evaluation is to quantify the levels of stray traction DC currents and to evaluate the area soil resistivity along the proposed construction route. Stray current testing was performed in and around the area where the new pipe will be installed. Significant stray current effects were measured near the MTA subway tracks crossing 31st Ave.

A reference cell-to-reference cell potential profile obtained in the area indicates that potential variations are considered significant as well. The potential measurements obtained indicated variations of approximately 0.135-volts or less (as monitored over a 30-minute period). The proposed area of construction for the new steel water main being installed as part of QED 1014 will be subjected to adverse effects from stray traction DC currents. Mitigation techniques employed in this design include a dielectric coating of the pipe, the use of galvanic anodes for corrosion protection, proper isolation of the piping segments subjected to the stray current, and isolation of the 52-in carrier piping from the 60-in casing achieved by means of dielectric casing spacers.

Soil resistivity measurements were obtained at fourteen (14) locations using a Collins Rod and calibrated Wheatstone Bridge. Depths obtained ranged from 3-feet to 4-feet. The data obtained is shown in Appendix I of this report. Soil resistivity ranged from a low of 2k ohm-cm to a high of 24k ohm-cm. Low resistivity areas were measured at locations that are likely subject to accumulation of road salt, among other contaminants. The mean soil resistivity is approximately 11.6k Ω-cm. This is a reasonable representation of the average soil resistivity in this area.

Only a small portion of the piping will be in contact with the soil directly. The majority of the piping will be inside the host pipe and surrounded by concrete grout.

The measurement of soil resistivity has been used for years as an indicator of the corrosivity of soil. Soil resistivity is the reciprocal of conductivity; the lower the resistivity, the easier current flows through the soil. Of the measurable soil characteristics, resistivity is generally accepted as the primary indicator of soil corrosivity. Resistivity is a property of the bulk volume of soil and electrolytes.

Although no universal standard has been accepted, (by an organization such as the American Society for Testing and Materials or the National Association of Corrosion Engineers), it is generally agreed that the classification shown below, or other similar classifications, reflect soil corrosivity.

Resistivity (Ohm-Cm)	Classification
< 1,000	Extremely Corrosive
1,000 to 3,000	Highly Corrosive
3,000 to 5,000	Corrosive
5,000 to 10,000	Moderately Corrosive
10,000 to 25,000	Mildly Corrosive
> 25,000	Progressively Less Corrosive

The above table provides qualitative insight to the expected corrosion exposure of a metallic structure in a soil of known resistivity. Accordingly, deterioration can generally be expected to be rapid and relatively severe in soils below 1,000 ohm-cm. This does not mean, however, that severe corrosion will not occur in soils of higher resistivity. In fact, depending on chemical conditions, severe corrosion can occur in soils above 25,000 ohm-cm. The table only indicates that the latter occurrence is generally not observed.

The review of the plans for the new steel water main indicates that there are multiple ties to existing structures. The installation of insulating flanges is required for any/all tie-ins to the existing water supply network, as well as any butterfly valve connections and at any/all ductile iron or cast iron distribution tie-in points. The installation of electrical isolation flange assemblies produces a more concise, manageable cathodic protection system.

The cathodic protection design created by CorrTech, Inc. assumes that the piping will be electrically isolated and provided with a high quality dielectric coating system, (such as the polyurethane coating system) and installed on all steel piping in contact with the soil environment. The piping associated with air cock hydrants and blow-offs should be coated with this coating system as well as electrically isolated from the steel trunk water main. There will be a total of 18 distinct segments associated with the QED 1014 project installation relative to cathodic protection. Please refer to Appendix II for the associated Ground Bed Design Worksheets.

SLIP-LINING

Slip lining has provided a viable option for trenchless pipe rehabilitation for years. This technique involves the insertion of a new pipe into an existing pipe. A new pipe with an outside dimension smaller than the inside dimension of the host pipe is either pulled or pushed into the host pipe. The ideal host pipe for slip lining are straight with no deformities, that is pipes with no or modest bends, no severe protrusions into the pipe, and only modest offset joints. Slip lining may be continuous or segmental. This project involves the insertion of a 52-in diameter, ½-in thick polyurethane coated and lined steel pipe into a 60-in lock bar riveted steel host pipe.

Casing spacers shall be utilized to provide dielectric separation between the existing 60-in lock bar steel host pipe and new 52-in insertion slip line pipe. In addition, the new pipe shall be coated with polyurethane coating on the external surface of the pipe and provided with sacrificial anode cathodic protection in the direct buried sections of piping (insertion pits). Electrical separation is essential to facilitate corrosion control and function of the sacrificial anode cathodic protection system.

Electrical isolation must be monitored during installation. For each of the sixteen individual insertion sections of slip lined pipe, the electrical resistance between the existing pipe and new slip line shall be measured every day. The measured resistance shall not be less than 500-ohms. The measurements shall be made in the presence of a resident inspector every day during pipe installation. Any values less than 500-ohms shall be resolved before proceeding with additional pipe slip lining.

To monitor the isolation of the 52-in piping from the 60-in piping after the installation is completed, casing test stations with reference cells and counter electrodes installed both inside and outside the casing annulus have been incorporated into the cathodic protection design.

DESIGN PARAMETERS

The following NYC DEP cathodic protection design criteria have been applied to facilitate the final design calculations:

- Percent of bare pipe 2.00%.
- Required current density 1.25 mA/ft² for direct buried piping.
- Pipe coating quality 25,000 ohm-cm
- 50-year design life for the cathodic protection anodes
- Anode consumption rate of 17-pounds per ampere-year
- 50% anode consumption utilization factor

For the segments of pipe inside the host pipe and encased in cementitious grout, the following design criteria have been applied:

- Percent of bare pipe 2.00%.
- Required current density 1 mA/ft².
- Pipe coating quality 25,000 ohm-cm
- 50-year design life for the cathodic protection anodes
- Anode consumption rate of 17-pounds per ampere-year
- 50% anode consumption utilization factor

The grout that will be used as fill between the new 52-in steel pipe and the existing 60-in steel host pipe has characteristics that differ greatly from the normal soil environment of direct buried pipe. Aside from the mechanical differences (higher yield; higher impermeability to moisture or air), the electrical and chemical qualities of the grout offer further corrosion protection. When fully set, the grout resistivity is extremely high (a typical value of 80,000 ohm-cm was used in this design). The grout is also more alkaline (pH close to 10) than what's normally encountered in soil, which is typically neutral with pH around 7. For steel, corrosion is inhibited in a more alkaline environment, and accelerated by a more acidic environment. The high resistivity combined with the high alkalinity of the grout inherently provides corrosion protection to the piping. This lowers the current requirement of the piping contacting the grout. A conservative value of 1mA/sqft was considered for the steel contacting the grout.

The magnesium anodes will be divided into groups and these groups will be distributed along the direct bury piping segments. Installing the anodes in individual groups enables current distribution to the 52-in piping in each segment, and provides multiple ground beds as backup in the event of damage to one groundbed.

The cathodic protection design has been prepared in accordance with NACE SP0169. NACE Standard Practice SP0169 (formerly RP0169), "Control of External Corrosion on Underground or Submerged Metallic Piping Systems". This standard practice presents procedures and practices for achieving effective control of external corrosion on buried or submerged metallic piping systems.

These recommendations are also applicable to many other buried or submerged metallic structures. They are intended for use by corrosion control personnel concerned with the corrosion of buried or submerged piping systems, including oil, gas, water, and similar structures. This standard describes the use of electrically insulating coatings, electrical isolation, and cathodic protection as external corrosion control methods. The standard contains specific provisions for the application of cathodic protection to existing bare, existing coated and to new piping systems. Also included are procedures for control of interference currents on pipelines.

Sacrificial anode cathodic protection provides protection with no external power source or rectifier. Sacrificial anodes are designed to corrode, thereby protecting the steel structure being installed. Energy for the sacrificial anode system is provided by the difference in the electrochemical level between the anode and the structure being protected. Typically, magnesium anodes are utilized to protect steel structures. The magnesium anode will corrode preferentially when connected to steel as part of a cathodic protection system. This is due to the fact that it sits at a higher electrochemical level.

A sacrificial anode installation is also a DC circuit with positive current supplied by the anodes and a return negative current supplied from the structure. The driving voltage of the sacrificial anode circuits is approximately 1.2 volt, the difference between magnesium and steel.

Ohm's Law (E=IR) is valid for DC circuits, where E is the driving voltage, or rectifier output, of the circuit, I is the resulting current magnitude and R is the resistance of the circuit. Proper system design seeks to minimize the resistance of the circuit through the use of an anode ground bed design. Sacrificial anode systems do not provide as much energy output as the impressed current design and therefore do not function properly in some applications where cathodic protection is required. Sacrificial systems require that the structure is first coated with a tightly adhered coating system and is also electrically isolated from all other metallic structures and system components. It is important to understand that pipe coating alone is not sufficient to provide complete corrosion control. Coatings must be supplemented with cathodic protection.[2]

NACE requirements specify that the cathodic protection of buried steel structures must be evidenced by two criteria. Firstly, adequate steel polarization is needed to ensure that the electrochemical processes have been established in order to arrest corrosion of the steel surface. Secondly, the cathodic protection design should be constructed and implemented in order to allow for field-testing protocol. Protection levels with respect to polarization criteria can then be verified. All testing is performed in order to demonstrate that adequate cathodic polarization exists on the protected structure. Polarization criteria must take into account any significant drop in the field measurements conducted. This is important both to satisfy the regulations as well as to ensure the preservation of pipe integrity. The primary focus of testing protocol and system design is to ensure that corrosion of any exposed steel has been mitigated.

[2] However, as defined in Sections 4 and 5 of NACE SP0169, cathodic protection can be provided to uncoated structures under certain conditions.

Sacrificial anode design utilizes a number of electrical parameters as input to the CorrTech, Inc. design calculation worksheet. The calculation worksheets for the total pipe section is included in this report as Appendix II.

In addition to the soil resistivity data, pipe geometry and anode dimensions and weight, the above design criteria are inputs to the design. The anode-to-remote earth resistance calculation is based on Dwight's Equation for a single horizontal anode.

$$R = \left(\frac{0.00521\rho}{L}\right)\left(\ln\left(\frac{4L^2 + 4L\sqrt{s^2 + L^2}}{dS}\right) + \frac{S}{L} - \frac{\sqrt{S^2 + L^2}}{L} - 1\right)$$

Where
R = resistance in ohms
L = anode length in feet
S = twice the depth of anode in feet
d = anode diameter in feet
ρ = resistivity in ohm-cm
ln is the natural logarithm function

This calculation provides the resistance for one (1) anode set in the measured average soil resistivity. The resistance to ground of the pipe is also calculated in the worksheet. Both the theoretical current requirement based on 1.25 mA/Ft² applied to the 2.00% of bare steel pipe and the circuit resistance of the pipe and anodes are calculated in the worksheet. The number of anodes to be installed is a variable input in the worksheet that determines total anode circuit resistance based on parallel resistance theory. The check in the design calculation worksheet indicates that the comparison of theoretical current compared to the field-tested circuit resistance, (as determined by the number of anodes to be installed), is between 0 and 25% and is in agreement.

The final total anode current output value is used to calculate the life of the anode system based on the magnesium anode consumption rate and 50% utilization. The life expectancy of anodes on these cathodically protected piping segments is in excess of 90 years.

Based on the cathodic protection design worksheets and pipe network, the following table summarizes the direct buried pipe segments for QED 1014:

Pipe Segment	Location and Description	No of Anodes	No of Anode Test Stations
1	CRESCENT ST BETWEEN 34TH AVE AND 33RD AVE	7	1
2	CRESCENT ST BETWEEN 33RD AVE AND BROADWAY	7	1
3	CRESCENT ST AND 31ST ROAD	10	1
4	CRESCENT ST BETWEEN 31ST ROAD AND 31ST AVE	13	1
5	CORNER OF CRESCENT ST AND 31ST AVE	45	1
6	31ST AVE BETWEEN 29TH ST AND 30TH ST	10	1
7A	31ST AVE BETWEEN 30TH ST AND 31ST ST	12	1
7B	31ST AVE BETWEEN 30TH ST AND 31ST ST	12	1
8	31ST AVE BETWEEN 31ST ST AND 32ND ST	6	1
9	31ST AVE BETWEEN 32ND ST AND 33RD ST	10	1
10	31ST AVE BETWEEN 35TH ST AND 36TH ST	10	1
11	31ST AVE BETWEEN 37TH ST AND 38TH ST	5	1
12	31ST AVE BETWEEN STEINWAY ST AND 41ST ST	10	1
13	CORNER OF 31ST AVE AND 41ST ST	30	1
14A	41ST ST BETWEEN NEWTOWN RD AND 30TH AVE	14	1
14B	41ST ST BETWEEN NEWTOWN RD AND 30TH AVE	14	1
15	41ST ST AT 28TH AVE	15	1
16	41ST ST BETWEEN 28TH AVE AND 25TH AVE	10	1
17	41ST ST AT 25TH AVE	40	1
18	41ST ST AT 25TH AVE	8	1
19	41ST ST AT 25TH AVE	4	1
	TOTAL	**292**	**21**

APPENDIX I

- Soil Resistivity Tabulations
- Stray Current Test Results
- Cathodic Protection Design Worksheet, 1 through 18 Segment(s)
- Material List- Engineers Estimate

CorrTech, Inc. Soil Resistivity

Client:	NYC DDC	Job Number:	8284
Project:	QED 1014 - Task Order 023 - Queens, NY	Date:	5/2/2016

Test Number	Resistivity (ohm-cm)	Location	Soil Type
1	21,000	Crescent St and 34th St (NW Corner)	Grass
2	24,000	Crescent St and 34th St (NW Corner)	Treebed
3	5,500	31st St and 31st Ave (SE Corner)	Soil
4	20,500	31st St and 31st Ave (NE Corner)	Soil
5	11,000	31st Ave and 33rd St (NW Corner)	Treebed
6	2,000	On 31st Ave between 34th St and 35th St (North Side of St)	Treebed
7	4,000	On 31st Ave between 35th St and 36th St (North Side of St)	Soil
8	9,000	On 31st Ave between 38th St and Steinway St (North Side of St)	Soil
9	22,000	31st Ave and 41st St (NW Corner)	Soil
10	6,000	On 41st St between 31st Ave and Newtown Rd (West Side of St)	Treebed
11	19,000	41st St and Newtown Rd (NE Corner)	Treebed
12	4,000	On 41st St between Newtown Rd and 28th Ave (West Side of St)	Treebed
13	12,000	41st St and 28th Ave (NW Corner)	Treebed
14	2,500	41st St and 25th Ave (NE Corner)	Soil
AVG.	**11,607**	**(ohm-cm)**	

CorrTech Inc., Groundbed Design Worksheet
NYC DDC Water Trunk Main Cathodic Protection

Client: NYC DDC Project: QED 1014
Date: 5/3/16
Description: **52-in slip line into 60-in host pipe, with grout casing fill; 48-in, 20-in appurtenances**
Segment: **1-17**

Structure Calculations DIRECT BURY		ENTER		SURFACE AREA
Length of pipe	ft	1,091		14,841 ft2
Diameter	ft	4.33		
Length of pipe	ft	51		268 ft2
Diameter	ft	1.67		
Length of pipe	ft	13		163 ft2
Diameter	ft	4		
				15,272 ft2
Circuit Calculations				
Soil Resistivity (ohm-cm)		11,607		***average of 14 resistivities**
Coating Quality (% bare)		2.00%		**per DDC design standards**
Pipe Surface requiring protection		305.44	FT2	
Pipe electrically isloated (yes/no)		yes		
Coating quality OHM-FT2		25000		**per DDC design standards**
Pipe to Earth Resistance		1.64	OHM	
Theoretical Current Required (mA/ft2)		1.25		**per DDC design standards**
Theoretical Current Requirements		0.3818	AMPS	0.1832629

Structure Calculations CONCRETE ENCASED		ENTER		SURFACE AREA
Length of pipe	ft	6,902		93,893 ft2
Diameter	ft	4.33		
Length of pipe	ft			0 ft2
Diameter	ft			
				93,893 ft2
Circuit Calculations				
Soil Resistivity (ohm-cm)	grout	80,000		typical value for grout (fully set)
Coating Quality (% bare)		2.00%		**per DDC design standards**
Pipe Surface requiring protection		1877.87	FT2	
Pipe electrically isloated (yes/no)		yes		
Coating quality OHM-FT2		25000		**per DDC design standards**
Pipe to Earth Resistance		0.27	OHM	
Theoretical Current Required (mA/ft2)		1		
Theoretical Current Requirements		1.8779	AMPS	1.12672

TOTAL theorectical current requirement	2.2597	AMPS	

Anode Parameters			**Individual anode resistance**
Anode Type	Magnesium anode, prepackaged		20.07 square of S2+L2 factor
Anode Weight (lbs)	32		36.77 resistivity x .0052 factor
Anode Diameter (feet)	0.46	**see notes below**	1.19 log value
Anode Length (feet)	1.64	**see notes below**	**62.50 Horizontal anode resistance**
2 time anode depth (feet)	20		**86.46 Vertical anode resistance**

Circuit Resistance Current Requirements					
Anode Resistance to Earth	plug in Resistance value	62.50	OHMS		
Driving Potential (V)		1.2	VOLTS		
Individual anode output		0.019	AMPS	**Check**	**Between 0% and 25%**
Number of anodes to be installed		280		-17.43%	Yes
Total circuit resistance		0.45	OHMS		
Current output of system		2.6534	AMPS		
Consumption Rate (lb/A-yr)		17.00			
Anode life based on anodes to be installed		**99.32**	**YEARS**	considers 50% anode efficiency	

Design conforms to the following standards:
National Association of Corrosion Engineers (NACE)
Standard Recommended Practice SP 0169 latest revision

CORROSION NACE SCOTT H. PAUL 4163 SPECIALIST

NOTES on anode dimensions:

Bare anode dimensions were considered due to the fact that the life of the anode is more dependent on the actual anode size than the packaging backfill.

The backfill may leech into surrounding earth as time progresses, which will cause depletion not related to the anode performance or cathodic protection mechanisms.

Other than erosion / leeching effects described above, the anode backfill is NOT consumable and will remain stable throughout the operational life of the anode.

Dwight's formula, utilized above, does not consider the inherent resistivity of the backfill.

For this reason, bare anode dimensions, when factored into the calculations, offer more conservative estimates as to the number of anodes required.

CorrTech Inc., Groundbed Design Worksheet
NYC DDC Water Trunk Main Cathodic Protection

Client:	NYC DDC	Project:	QED 1014
Date:	5/3/16		
Description:	72-inch, 48-inch steel piping		
Segment:	18		

Structure Calculations DIRECT BURY		ENTER		SURFACE AREA
Length of pipe	ft	121		2,281 ft2
Diameter	ft	6		
Length of pipe	ft	42		528 ft2
Diameter	ft	4		
				2,809 ft2
Circuit Calculations				
Soil Resistivity (ohm-cm)		11,607		***average of 14 resistivities**
Coating Quality (% bare)		2.00%		**per DDC design standards**
Pipe Surface requiring protection		56.17	FT2	
Pipe electrically isloated (yes/no)		yes		
Coating quality OHM-FT2		25000		**per DDC design standards**
Pipe to Earth Resistance		8.90	OHM	
Theoretical Current Required (mA/ft2)		1.25		**per DDC design standards**
Theoretical Current Requirements		0.0702	AMPS	0.033703

Structure Calculations CONCRETE ENCASED		ENTER		SURFACE AREA
Length of pipe	ft	0		0 ft2
Diameter	ft	4.33		
Length of pipe	ft			0 ft2
Diameter	ft			
				0 ft2
Circuit Calculations				
Soil Resistivity (ohm-cm)	grout	80,000		typical value for grout (fully set)
Coating Quality (% bare)		2.00%		**per DDC design standards**
Pipe Surface requiring protection		0.00	FT2	
Pipe electrically isloated (yes/no)		yes		
Coating quality OHM-FT2		25000		**per DDC design standards**
Pipe to Earth Resistance	N/A		OHM	
Theoretical Current Required (mA/ft2)		1		
Theoretical Current Requirements		0.0000	AMPS	#VALUE!
TOTAL theorectical current requirement		0.0702	AMPS	

Anode Parameters			**Individual anode resistance**
Anode Type	Magnesium anode, prepackaged		20.07 square of S2+L2 factor
Anode Weight (lbs)	32		36.77 resistivity x .0052 factor
Anode Diameter (feet)	0.46	**see notes below**	1.19 log value
Anode Length (feet)	1.64	**see notes below**	**62.50 Horizontal anode resistance**
2 time anode depth (feet)	20		**86.46 Vertical anode resistance**

Circuit Resistance Current Requirements						
Anode Resistance to Earth	plug in Resistance value	62.50	OHMS			
Driving Potential (V)		1.2	VOLTS			
Individual anode output		0.019	AMPS		**Check**	**Between 0% and 25%**
Number of anodes to be installed		8			-2.25%	Yes
Total circuit resistance		16.71	OHMS			
Current output of system		0.0718	AMPS			
Consumption Rate (lb/A-yr)		17.00				
Anode life based on anodes to be installed		**104.87**	**YEARS**		considers 50% anode efficiency	

Design conforms to the following standards:
National Association of Corrosion Engineers (NACE)
Standard Recommended Practice SP 0169 latest revision

CORROSION NACE SCOTT M. PAUL 4169 SPECIALIST

NOTES on anode dimensions:

Bare anode dimensions were considered due to the fact that the life of the anode is more dependent on the actual anode size than the packaging backfill.

The backfill may leech into surrounding earth as time progresses, which will cause depletion not related to the anode performance or cathodic protection mechanisms.

Other than erosion / leeching effects described above, the anode backfill is NOT consumable and will remain stable throughout the operational life of the anode.

Dwight's formula, utilized above, does not consider the inherent resistivity of the backfill.

For this reason, bare anode dimensions, when factored into the calculations, offer more conservative estimates as to the number of anodes required.

CorrTech Inc., Groundbed Design Worksheet
NYC DDC Water Trunk Main Cathodic Protection

Client: NYC DDC Project: QED 1014
Date: 5/3/16
Description: 72-inch, 48-inch steel piping
Segment: 19

Structure Calculations DIRECT BURY		ENTER		SURFACE AREA
Length of pipe	ft	37		697 ft2
Diameter	ft	6		
Length of pipe	ft	10		126 ft2
Diameter	ft	4		
				823 ft2
Circuit Calculations				
Soil Resistivity (ohm-cm)		11,607		***average of 14 resistivities**
Coating Quality (% bare)		2.00%		**per DDC design standards**
Pipe Surface requiring protection		16.46	FT2	
Pipe electrically isloated (yes/no)		yes		
Coating quality OHM-FT2		25000		**per DDC design standards**
Pipe to Earth Resistance		30.37	OHM	
Theoretical Current Required (mA/ft2)		1.25		**per DDC design standards**
Theoretical Current Requirements		0.0206	AMPS	0.0098772

Structure Calculations CONCRETE ENCASED		ENTER		SURFACE AREA
Length of pipe	ft	0		0 ft2
Diameter	ft	4.33		
Length of pipe	ft			0 ft2
Diameter	ft			
				0 ft2
Circuit Calculations				
Soil Resistivity (ohm-cm)	grout	80,000		typical value for grout (fully set)
Coating Quality (% bare)		2.00%		**per DDC design standards**
Pipe Surface requiring protection		0.00	FT2	
Pipe electrically isloated (yes/no)		yes		
Coating quality OHM-FT2		25000		**per DDC design standards**
Pipe to Earth Resistance		N/A	OHM	
Theoretical Current Required (mA/ft2)		1		
Theoretical Current Requirements		0.0000	AMPS	#VALUE!
TOTAL theorectical current requirement		0.0206	AMPS	

Anode Parameters			**Individual anode resistance**
Anode Type	Magnesium anode, prepackaged		20.07 square of S2+L2 factor
Anode Weight (lbs)	32		36.77 resistivity x .0052 factor
Anode Diameter (feet)	**0.46**	**see notes below**	1.19 log value
Anode Length (feet)	**1.64**	**see notes below**	**62.50 Horizontal anode resistance**
2 time anode depth (feet)	20		**86.46 Vertical anode resistance**

Circuit Resistance Current Requirements					
Anode Resistance to Earth	plug in Resistance value	62.50	OHMS		
Driving Potential (V)		1.2	VOLTS		
Individual anode output		0.019	AMPS	**Check**	**Between 0% and 25%**
Number of anodes to be installed		4		-26.78%	Yes
Total circuit resistance		46.00	OHMS		
Current output of system		0.0261	AMPS		
Consumption Rate (lb/A-yr)		17.00			
Anode life based on anodes to be installed		**144.31**	**YEARS**	considers 50% anode efficiency	

Design conforms to the following standards:
National Association of Corrosion Engineers (NACE)
Standard Recommended Practice SP 0169 latest revision

CORROSION SPECIALISTS NACE SCOTT M. PAUL 4163

NOTES on anode dimensions:

Bare anode dimensions were considered due to the fact that the life of the anode is more dependent on the actual anode size than the packaging backfill.

The backfill may leech into surrounding earth as time progresses, which will cause depletion not related to the anode performance or cathodic protection mechanisms.

Other than erosion / leeching effects described above, the anode backfill is NOT consumable and will remain stable throughout the operational life of the anode.

Dwight's formula, utilized above, does not consider the inherent resistivity of the backfill.

For this reason, bare anode dimensions, when factored into the calculations, offer more conservative estimates as to the number of anodes required.

CorrTech Inc.	Task Order 023
Client	NYC DDC
Project	Queens, NY on Crescent St, 31st Ave, and 41st St.
Contract	QED 1014
Prepared	5/6/2016

Quantity and Cost Estimating

TOTAL-FURNISH AND INSTALL CATHODIC PROTECTION

Item No	Description	Quantity	Measure
1	32-pound high potential magnesium anodes	298	each
2	Stuart Steel Type S Splice Kit	152	each
3	AWG 8 HMWPE, Black (anode header cable)	5,960	feet
4	AWG 10 THWN, Red	8,720	feet
5	AWG 10 THWN, White	710	feet
6	AWG 10 THWN, Blue	710	feet
7	AWG 10 THWN, Green	5,060	feet
8	Thermite welds, CA-15	284	each
9	Copper-copper sulfate reference cells w/50-ft HMWPE 12 yellow (standard type)	40	each
10	Silver Chloride reference cells w/50-ft HMWPE 12 black (casing type)	32	each
11	Counter electrodes w/50-ft AWG 12 THWN Purple (standard type black tape for casing)	72	each
13	Burndy KS-17 Copper Split bolts (for anode splicing and test stations)	224	each
14	3M Supper 88- Black Electrical Tape (used with splice kit)	20	each
15	3M 130 C Rubber Tape (used with splice kit)	20	each
16	Cans 3M scotchkote electrical coating FD (used with splice kit)	8	each
17	Royston Handi-Caps (cover thermite weld)	284	each
18	Test station housing (NYC DEP Standard)	63	each
19	Acrylic Tags for Labeling Test Stations	63	sets

ATTACHMENT "A"

Typical Pipe Push Stops for Liner Pipe

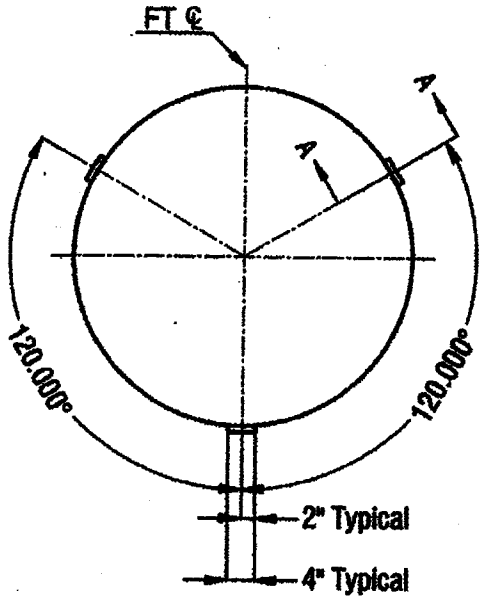

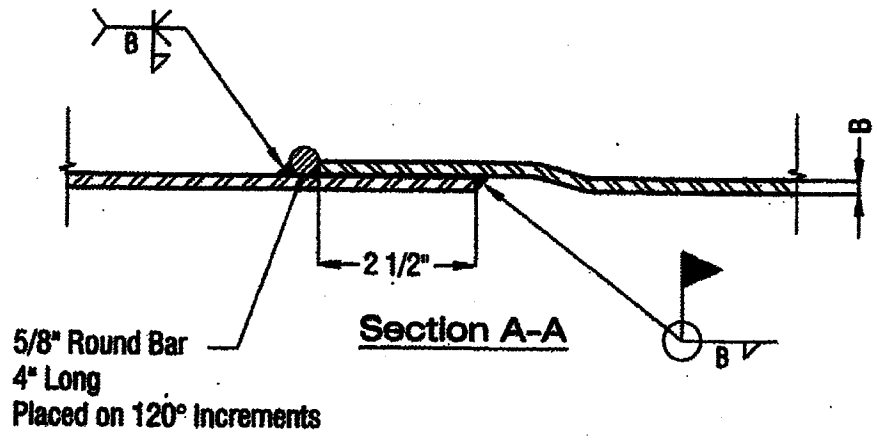

Section A-A

NOTES:

- All dimensions are in inches unless otherwise specifid.
- All fillet welds to be the size of the thinner of the two materials being welded.
- The Contractor shall submit shop drawings to the Engineer for approval.

ATTACH TO CONTRACT DOCUMENTS

THE CITY OF NEW YORK
DEPARTMENT OF DESIGN AND CONSTRUCTION
INFRASTRUCTURE DIVISION
BUREAU OF DESIGN

PROJECT ID: QED1014

REHABILITATION OF EXISTING TRUNK WATER MAINS IN CRESCENT STREET FROM 34TH AVENUE TO 31ST AVENUE; 31ST AVENUE FROM CRESCENT STREET TO 41ST STREET; AND 41ST STREET FROM 31ST AVENUE TO 25TH AVENUE

INCLUDING DISTRIBUTION WATER MAIN, SEWER AND TRAFFIC SIGNAL WORK

Together With All Work Incidental Thereto

BOROUGH OF BROOKLYN

ADDENDUM NO. 4

DATED: May 10, 2016

This Addendum is issued for the purpose of amending the requirements of the contract documents and is hereby made part of said contract documents to the same extent as if it was originally included therein.

Specifications For
Abatement Of Coal Tar Wrap Asbestos Containing Materials
REHABILITATION OF EXISTING TRUNK WATER MAINS IN CRESCENT STREET FROM 34TH AVENUE TO 31ST AVENUE; 31ST AVENUE FROM CRESCENT STREET TO 41ST STREET; AND 41ST STREET FROM 31ST AVENUE TO 25TH AVENUE
QUEENS, NY

Department of Design and Construction

Prepared By:

Bureau of Environmental and Geotechnical Services
30-30 Thomson Avenue, 5th Floor
Long Island City, New York 11101

Revision #: 00 or Final Submission
Date: 10/16/2009

TABLE OF CONTENTS

SECTION 67.11
INCREMENTAL COST FOR ASBESTOS ABATEMENT WORK PERFORMED ON EXISTING STEEL PIPE WATER MAIN TO BE REMOVED

67.11.1 GENERAL

67.11.1.1 DESCRIPTION

(A) The contract documents are as defined in the "Standard Construction Contract". The General Conditions shall apply to all work of this section.

(B) Work specified herein shall be the removal and disposal of water main pipe of the specified diameter covered with Coal Tar Wrap Asbestos-Containing Materials (ACM) and asbestos-contaminated materials from designated areas of the water main replacement on this project.

(C) The phasing and scheduling of work for this project shall be coordinated with and approved by the Engineer. The Engineer will make the final determination on all issues under this contract covered by this specification in coordination with NYC Department of Design and Construction's Bureau of Environmental and Geotechnical Services (BEGS).

67.11.1.2 SCOPE OF WORK

(A) The Contractor is to provide all labor, materials, equipment, services, testing, appurtenances, permits and agreements necessary to perform the work required for the abatement of ACM and removal of pipe covered with asbestos-containing Coal Tar Wrap as required by these contract documents. All work shall be performed in accordance with this specification, EPA regulations, OSHA regulations, New York City Local Law 70, Title 15, Chapter 1 RCNY, New York State Industrial Code 56, NIOSH recommendations, and any other applicable federal, state or local government regulations. Whenever there is a conflict or overlap of the above references the most stringent provisions are applicable.

(B) The intent of this section is to ensure that the Contractor is responsible for the following:

(1) Abatement of all ACM.

(2) Cleaning and decontamination of the entire affected area.

(3) Removal of various sections of pipe in varying lengths, as necessary, that may be required to access ACM in each excavated area. The Contractor shall dispose of all debris associated with such removal activities as ACM waste.

(4) Removal and disposal of all ACM found within these areas such as soil within excavated area, section of pipes, and coal tar wrap, etc.

(5) Provide all scaffolding, platform installation, equipment, tools, transportation and any other equipment required and/or necessary to complete all work described in the contract documents.

(6) The Contractor shall be responsible for and shall include in the Contractor's bid any and all fees or changes imposed by Local, State or Federal Law, Rule or Regulation applicable to the work specified herein, including fees or charges which may be imposed subsequent to the date of the Bid Opening.

(C) The Contractor shall perform the following work as described below and indicated on the drawings. The drawings are only a diagrammatic representation of the work areas and do not constitute the actual quantities of material and or size of the pipe. Contractor is responsible for the confirmation of the actual total quantities of the work to be performed prior to bidding.

WORK AREA EXCAVATION:

Remove and dispose of asbestos-containing coal tar pipe wrap within work area. Asbestos-containing coal tar wrap shall be removed utilizing the approved NYCDEP procedure outlined below. Variance for utilizing this procedure within the work area shall be applied for by the Contractor and approved by the New York City Department of Environmental Protection (NYCDEP) prior to the start of abatement activities. In areas where coal tar wrap and pipe with coating of same are to be removed, the Contractor shall be responsible to remove all coal tar wrap material within the soil below the area where the pipe has to be removed. Repeating this procedure at several locations will not be cause for additional compensation to the Contractor. All piping and associated materials as well as impacted soil shall be disposed of as contaminated waste.

(D) The Contractor's attention is directed to the fact that patents cover certain methods of asbestos abatement indicated in the specifications. To date, patents have been issued with regard to negative pressure enclosures or negative or reduced pressure and glove-bag.

(E) The Contractor shall be solely responsible for and shall hold the City of New York Department of Design and Construction and the City harmless from any and all damages, losses and expenses resulting from any infringement by Contractor of any patent including, but not limited to, the patents described above, used by Contractor during performance of this agreement.

(F) Prior to starting, the Contractor must notify the Commissioner of the City of New York Department of Design and Construction if the Contractor anticipates any difficulty in performing the work as directed and required by these specifications. The Contractor shall be required to attend an on-site job meeting with the Engineer prior to start of work to examine conditions of the site for removal and plan the sequence for removal operations.

(G) The Contractor is responsible for amending the Asbestos Inspection Report (ACP-7) and resubmitting it to the NYCDEP Asbestos Control Program prior to abatement work as per Title 15, Chapter 1 of RCNY for any changes in quantities and/or starting date.

(H) If more than one (1) year has elapsed since the original ACP-7 was submitted to the Department of Environmental Protection, the Contractor is responsible for preparing and submitting a new ACP-7 to the Department of Environmental Protection as well as providing all other notifications to various regulatory agencies as required.

(I) In addition, the Contractor is also responsible for preparing, amending and submitting any Asbestos Variance Applications (ACP-9) that may be required for the completion of the contract or incidental work.

(J) The Contractor is also responsible for preparing and submitting all filings, notifications, etc. required by all City, State and Federal regulatory agencies having jurisdiction.

(K) For coordination with other contractors, see the General Conditions governing all contracts.

(L) Related Asbestos Removal Work Under Other Contracts:

(1) Each contractor shall be responsible for the removal of incidental asbestos not identified in this section and found prior to or during the work.

(2) Incidental asbestos is defined as ACM that is discovered during the course of their work that must be abated to enable contractors to perform the work of their contract.

(M) Work Hours:

(1) The Contractor shall establish the Contractor's work schedule in a way that avoids interference or conflict with the normal activities of the area. Work in the evenings shall be done at no additional cost to the City.

(2) All work shall be done during regular working hours unless the Contractor requests authorization to work in other than regular working hours and such authorization is granted by the Commissioner. (Regular working hours are those during which any given facility in which work is to be done is customarily open and functioning). If such work schedule is authorized by the Commissioner the work shall be done at no additional cost to the City.

(3) The order of phases and start dates associated with each will be determined by the Engineer.

(4) Waste transfer must be approved by the Engineer.

(N) Stages Of Asbestos Removal Work:

The Abatement Contractor or Subcontractor will be required to perform the work and it is the intent of this specification to remove all asbestos-containing and asbestos contaminated materials from the work area. The Contractor is responsible for verifying all quantities of materials listed here and bid accordingly.

(O) Certain equipment in the work area may need to remain operational during removal. Therefore, the removal of ACM from this equipment shall be performed as the last removal activities within the work area. The Contractor shall coordinate the scheduling for the removal of ACM on functioning equipment with the Engineer.

67.11.1.3 SPECIAL EXPERIENCE REQUIREMENTS FOR ASBESTOS ABATEMENT

(A) General: The special experience requirements set forth in Paragraph (B) below apply to the contractor who will be performing the Asbestos Abatement work under this contract. If the bidder intends to perform such work itself, it must demonstrate compliance with the special experience requirements. If the bidder intends to subcontract this work, the proposed subcontractor must demonstrate compliance with the special experience requirements. Once approved, no substitution will be permitted, unless the qualifications of the proposed replacement have been approved in writing in advance by the City.

(1) Evaluation: Compliance with the special experience requirements for Asbestos Abatement must be submitted for evaluation a minimum of thirty (30) days prior to commencement of that phase of work which may require removal coal tar wrap asbestos-containing materials. The Contractor is advised that the Contractor will not be permitted to commence excavation work at the site for that phase of construction which may require possible removal of coal tar wrap asbestos-containing materials, should the Contractor's Asbestos Abatement contractor fail to comply with the special experience requirements. Compliance with the experience requirements set forth herein will be determined solely by the City.

(2) Compliance By The Asbestos Abatement Contractor As An Entity: Compliance with the special experience requirements must be demonstrated by the Asbestos Abatement contractor. The Asbestos Abatement contractor itself must have been in existence as the same entity for the three (3) year period prior to the bid opening. During such period, the bidding entity itself must have achieved compliance with the special experience requirements. The Asbestos Abatement contractor entity may not use or rely on the experience or credentials of any other entity regardless of any relationship such other entity may have to the Asbestos Abatement contractor.

(B) Requirements: The Asbestos Abatement contractor must demonstrate compliance with the special experience requirements set forth in subparagraphs (1) through (5) below. The Asbestos Abatement contractor must submit documentation demonstrating compliance with all listed requirements. Such documentation shall include without limitation, all required licenses, certificates, and documentation.

(1) The Asbestos Abatement contractor must, whether an individual, corporation, partnership, joint venture or other legal entity, demonstrate for the three (3) year period prior to the bid opening,

that it has been licensed by the New York State Department of Labor, as an "Asbestos Contractor".

(2) The Asbestos Abatement contractor must, for the three (3) year period prior to the bid opening, have been in the business of providing asbestos abatement services as a routine part of its daily operations.

(3) The Asbestos Abatement contractor proposing to do asbestos abatement work must be thoroughly experienced in such work and must provide evidence of having successfully performed and completed in a timely fashion at least five (5) asbestos abatement projects of similar size and complexity. The aggregate cost of these projects must be at least $1,000,000 in each of the three (3) years.

(4) For each project submitted to meet the experience requirements set forth above, the Asbestos Abatement contractor must submit the following information for the project: name and location of the project; name title and telephone number of the owner or the owner's representative who is familiar with the Asbestos Abatement contractor's work; brief description of the work completed as a prime or sub-contractor; amount of contract or subcontract; and, the date of completion.

(5) The Asbestos Abatement contractor must demonstrate that it has the financial resources, supervisory personnel and equipment necessary to carry out the work and to comply with the required performance schedule, taking into consideration other business commitments. The Asbestos Abatement contractor must submit such documentation as may be required by the Department of Design and Construction to demonstrate that it has the requisite capacity to perform the required services of this contract.

(C) Throughout the specifications, reference is made to codes and standards which establish qualities and types of workmanship and materials, methods for testing and reporting on the pertinent characteristics thereof to provide materials or workmanship that meet or exceed the specifically named codes or standards where required by these specifications.

(D) Site Investigation: The Contractor shall inspect all the specifications and related drawings, and will investigate and confirm the site conditions affecting the work, including, but not limited to:

(1) Physical considerations and conditions of both the material and structure. These considerations include any obstacles or obstructions encountered in accessing or removing the material.

(2) Handling, storage, transportation and disposal of the material.

(3) Availability of qualified and skilled labor.

(4) Availability of utilities.

(5) Exact quantities of all materials to be disturbed and/or removed.

67.11.1.4 WORK BY OTHERS

The City reserves the right during the term of this contract to have work performed on asbestos abatement projects by other contractors as the situation warrants.

67.11.1.5 DEFINITIONS

(A) General Explanation: Certain terms used in this specification are defined below. Definitions and explanations of this specification are not necessarily complete or exclusive, but are general for the work to the extent they are not stated more explicitly in another element of the contract documents.

(B) Definitions In General Use:

(1) Approve: Where used in conjunction with Engineer's response to submittals, requests, applications, inquiries, reports and claims by Contractor, the meaning of term "approved" will be held to limitations of Engineer's responsibilities and duties as specified in contract documents. In no case will "approval" by Engineer be interpreted as a release of Contractor from responsibilities to fulfill requirements of contract documents.

(2) Directed, Requested, Etc.: Where not otherwise explained, terms such as "directed," "requested," "authorized," "selected," "approved," "required," "accepted," and "permitted" mean "directed by Engineer," "requested by Engineer," and similar phrases. However, no such implied meaning will be interpreted to extend Engineer's responsibility into Contractor's responsibility for construction supervision.

(3) Furnish: Except as otherwise defined in greater detail, term "furnish" is used to mean supply and deliver to project site, ready for unloading, unpacking, assembly, installation, etc., as applicable in each instance.

(4) Indicated: The term "indicated" is a cross-reference to graphic representations, notes or schedules on drawings, to other paragraphs or schedules in the specifications, and to similar means of recording requirements in contract documents. Where terms such as "shown," "noted," "scheduled," and "specified" are used in lieu of "indicated," it is for purpose of helping reader locate cross-reference, and no limitation of location is intended except as specifically noted.

(5) Install: Except as otherwise defined in greater detail, term "install" is used to describe operations at project site including unloading, unpacking, assembly, erection, placing, anchoring, applying, working to dimension, finishing, curing, protecting, cleaning and similar operations, as applicable in each instance.

(6) Installer: The term "installer" is defined as the entity (person or firm) engaged by Contractor, or its subcontractor or sub-subcontractor for performance of a particular unit of work at project site, including installation, erection, application and similar required operations. It is a general requirement that such entities (installers) be expert in operations they are engaged to perform.

(7) Provide: Except as otherwise defined in greater detail, term "provide" means furnish and install, complete and ready for intended use, as applicable in each instance.

(8) Testing Laboratory: The term "Testing Laboratory" is defined as an entity engaged by the City to perform specific inspections or tests of the work, either at project site or elsewhere; and to report and (if required) interpret results of those inspections or tests.

(C) Definitions Relative To Asbestos Abatement:

(1) Abatement: Procedures physically taken to control fiber release from ACM. This includes removal, encapsulation, enclosure, and repair.

(2) Aggressive Sampling: Method of sampling in which the individual collecting the air sample creates activity by the use of mechanical equipment during the sampling period to stir up settled dust and simulate activity in that area of the building.

(3) AIHA: American Industrial Hygiene Association.

(4) Airlock: System for permitting entrance and exit while restricting air movement between a contaminated area and an uncontaminated area. It consists of two (2) curtained doorways separated by a distance of at least three (3) feet such that one passes through one doorway into the airlock, allowing the doorway sheeting to overlap and close off the opening before proceeding through the second doorway, thereby preventing flow-through contamination.

(5) Air Sampling: Process of measuring the fiber content of a known volume of air collected during a specific period. The procedure utilized for asbestos follows the NIOSH Standard Analytical

Method 7400, or the provisional transmission electron microscopy methods developed by the US EPA which is utilized for lower detection levels and specific fiber identification.

(6) Amended Water: Water to which a surfactant has been added.

(7) ANSI: American National Standards Institute.

(8) Area Air Sampling: Any form of air sampling or monitoring where the sampling device is placed at some stationary location.

(9) Asbestos: Any hydrated mineral silicate separable into commercially usable fibers, including but not limited to chrysotile (serpentine), amosite (cumingtonite-grunerite), crocidolite (riebeckite), tremolite, anthophyllite and actinolite.

(10) Asbestos-Containing Material (ACM): Asbestos or any material containing more than one percent (1%) asbestos.

(11) Asbestos-Containing Waste Material: ACM or asbestos-contaminated objects requiring disposal.

(12) Asbestos Handler: Individual who disturbs, removes, repairs, or encloses friable asbestos material. This individual shall have completed approved training course(s) and be in possession of certification issued by NYCDEP and NYSDOL.

(13) Asbestos Handler Supervisor: Individual who supervises the handlers during an asbestos project and ensures that proper asbestos abatement procedures as well as individual safety procedures are being adhered to. This individual shall have completed approved training course(s) and be in possession of certification issued by NYCDEP and NYSDOL.

(14) Asbestos Handling Certificate: Certificate(s) issued to individuals who have met the criteria established by NYCDEP and/or NYSDOL.

(15) Asbestos Inspection Report: A report on the condition of a building or structure in relation to the presence and condition of asbestos therein.

(16) Asbestos Investigator: An individual certified by NYCDEP as having successfully demonstrated the ability to identify the presence of and evaluate the condition of asbestos in a building or structure.

(17) Asbestos Project: Any form of work performed in connection with the alteration, innovation, modification, or demolition of a building or structure which will disturb (e.g. remove, enclose, encapsulate) more than three (3) linear feet or more than three (3) square feet of friable ACM.

(18) ASTM: The American Society for Testing and Materials International.

(19) Authorized Visitor: Authorized visitor shall mean the Commissioner and the Commissioner's representative, and any representative of a regulatory or other agency having jurisdiction over the project.

(20) Certified Industrial Hygienist (CIH): Individual with a minimum of five (5) years experience as an industrial hygienist and who has successfully completed both levels of the examination administered by the American Board of Industrial Hygiene and who is currently certified by that board.

(21) Certified Safety Professional (CSP): Individual having a bachelor's degree from an accredited college or university and a minimum of four (4) years experience as a safety professional and who has successfully completed both levels of the examination administered by the Board of Certified Safety Professionals and who is currently certified by that board.

(22)City: Shall mean the City of New York.

(23)Clean Room: An uncontaminated area or room that is part of worker decontamination enclosure system with provisions for storage of workers' street clothes and protective equipment.

(24)Clearance Air Monitoring: Employment of aggressive sampling techniques with a volume of air collected to determine the airborne concentration of residual fibers and shall be performed as the final abatement activity.

(25)Commissioner: Shall mean the head of the Agency that has entered into this contract or a duly authorized representative.

(26)Competent Person: Shall mean the designated person as defined in OSHA 29CFR 1926.1101.

(27)Curtained Doorway: Device that consists of at least three (3) overlapping sheets of polyethylene over an existing or temporarily framed doorway. One sheet shall be secured at the top and left side, the second sheet at the top and right side, and the third sheet at the top and left side. All sheets shall have weights attached to the bottom to ensure that the sheets hang straight and maintain a seal over the doorway when not in use.

(28)Decontamination Enclosure System: Series of connected rooms, separated from the work area and from each other by air locks, for the decontamination of workers, materials, waste containers, and equipment.

(29)Encapsulant (Sealant) or Encapsulating Agent: Liquid material which can be applied to ACM and which temporarily controls the possible release of asbestos fibers from the material either by creating a membrane over the surface (bridging encapsulant) or by penetrating into the material and binding its components together (penetrating encapsulant). This may also be used to seal surfaces from which ACM has been removed.

(30)Encapsulation: Coating or spraying of ACM with a sealant.

(31)Enclosure: Construction of airtight walls and/or ceilings between ACM and the facility environment, or around surfaces coated with ACM, or any other appropriate procedure as determined by the NYCDEP which prevents the release of asbestos fibers.

(32)ELAP: Environmental Laboratory Approval Program administered by the New York State Department of Health.

(33)EPA or USEPA: United States Environmental Protection Agency.

(34)Equipment Room: Contaminated area or room that is part of the worker decontamination enclosure system with provisions for the storage of contaminated clothing and equipment.

(35)Fixed Object: Utility or associated piping within the work area that cannot be removed from the work area.

(36)Friable Asbestos Material: Asbestos or any ACM that can be crumbled, pulverized, or reduced to powder when dry, by hand or other mechanical pressure.

(37)Glove-Bag Technique: Method for removing friable ACM from heating, ventilation, and air conditioning (HVAC) ducts, short piping runs, valves, joints, elbows, and other nonplanar surfaces in a noncontained work area. The glove-bag assembly is a manufactured device consisting of a glove-bag (constructed of at least 6-mil transparent polyethylene), two inward-projecting long sleeve gloves, one inward-projecting water wand sleeve, an internal tool pouch, and an attached, labeled receptacle for asbestos waste. The glove-bag is constructed and installed in such a manner that it surrounds the object or area to be decontaminated and contains all asbestos fibers released during the removal process.

(38)HEPA-Filter: High efficiency particulate air filter capable of trapping and retaining 99.97-percent of particles (asbestos fibers) greater than 0.3-micrometers mass median aerodynamic equivalent diameter.

(39)Holding Area: Chamber in the equipment decontamination enclosure located between the washroom and an uncontaminated area.

(40)Homogeneous Work Area: Portion of the work area that contains one type of ACM and/or where one type of abatement is used.

(41)Industrial Hygiene: Science and art devoted to the recognition, evaluation, and control of those environmental factors or stresses, arising in or from the work place, which may cause sickness, impaired health and well being, or significant discomfort and inefficiency among worker or among the citizens of the community.

(42)Industrial Hygienist: Individual having a college or university degree or degrees in Engineering, Chemistry, Physics or Medicine, or related Biological Sciences who, by virtue of special studies and training, has acquired competence in industrial hygiene. Such special studies and training must have been sufficient in all of the above cognate sciences to provide the abilities:

(a) To recognize the environmental factors and to understand their effect on people and their well being; and,

(b) To evaluate, on the basis of experience and with the aid of quantitative measurement techniques, the magnitude of these stresses in terms of ability to impair people's health and well being; and,

(c) To prescribe methods to eliminate, control, or reduce such stresses when necessary to alleviate their efforts.

(43)Large Asbestos Project: Asbestos project involving the disturbances (e.g. removal, enclosure, encapsulation) of 260-linear feet or more of friable ACM or 160-square feet or more of friable ACM.

(44)Major Violation: Any action, on the job performance or lack of performance that may place any individual at risk other than the worker who commits the violation. A major violation is equivalent to two (2) violation points.

(45)Minor Asbestos Project: Project involving the disturbance (e.g. removal, enclosure, encapsulation, repair) of more than three (3) linear feet, but not more than twenty-five (25) linear feet of friable ACM or more than three (3) square feet, but not more than ten (10) square feet of friable ACM.

(46)Minor Violation: Any action, on the job performance or lack of performance that may place the worker at risk. A minor violation is equivalent to one (1) violation point.

(47)Movable Object: Any equipment or utility in the work area that can be removed from the work area.

(48)Negative Air Pressure Equipment: Portable local exhaust system equipped with HEPA filtration. The system shall be capable of creating a negative pressure differential between the outside and inside of the work area.

(49)NESHAPS: National Emission Standards for Hazardous Air Pollutants.

(50)NIOSH: National Institute for Occupational Safety and Health.

(51)NYCDEP: New York City Department of Environmental Protection.

(52)NYSDOL: New York State Department of Labor.

(53)Occupied Area: Area of the work site where abatement is not taking place and where personnel or occupants normally function or where workers are not required to use personal protective equipment.

(54)OSHA: Occupational Safety and Health Administration.

(55)Person: Individual, partnership, company, corporation, association, firm, organization, governmental agency, administration, or the NYCDEP, or any other group of individuals, or any officer or employee thereof.

(56)Personal Air Monitoring: Method used to determine employees' exposure to airborne fibers. The sample is collected outside the respirator in the worker's breathing zone.

(57)Personal Protective Equipment (PPE): Appropriate protective clothing, gloves, eye protection, footwear, and head gear.

(58)Physician: Person licensed or otherwise authorized under Article 131 Section 65.22 of the New York State Education Law.

(59)Plasticize: Cover floors and walls with polyethylene sheeting as herein specified or by using spray plastics as acceptable to the NYCDEP.

(60)Professional Engineer (PE): Individual having, at a minimum, a Bachelor's Degree in Engineering from an accredited college or university with four (4) years acceptable experience as an engineer and who has successfully completed both levels of the Professional Engineers Examination administered by the State of New York Department of Education, Division of Professional Licensing.

(61)Qualitative Fit Test: Individual test subject's responding (either voluntarily or involuntarily) to a chemical challenge outside the respirator face-piece. Three of the most popular methods include: (1) irritant smoke test; (2) odorous vapor test; and (3) taste test.

(62)Quantitative Fit Test: Exposing the respiratory wearer to a test atmosphere containing an easily detectable, nontoxic aerosol, vapor or gas as the test agent. Instrumentation, which samples the test atmosphere and the air inside the face-piece of the respirator, is used to measure quantitatively the leakage into the respirator. There are a number of test atmospheres, test agents, and exercises to perform during the test.

(63)Registered Architect (RA): Individual having, at a minimum, a Bachelor's Degree in Architecture from an accredited college or university with three (3) years acceptable experience as an architect and who has successfully completed both levels of the Architects Registration Examination administered by the State of New York Department of Education, Division of Professional Licensing.

(64)Removal: Stripping of any asbestos-containing materials from surfaces or components of a structure or taking out structural components in accordance with 40 CFR 61 Subparts A and M.

(65)Shower Room: Room between the clean room and the equipment room in the worker decontamination enclosure with hot and cold running water controllable at the tap and arranged for complete showering during decontamination.

(66)Small Asbestos Project: Asbestos project involving the disturbance (e.g. removal, enclosure, encapsulation) of more than 25-linear feet and less than 260-linear feet of friable ACM or more than 10-square feet and less than 160-square feet of friable ACM.

(67)Staging Area: Work area near the waste transfer airlock where containerized asbestos waste has been placed prior to removal from the work area.

(68)Structural Member: Load-supporting member of a facility, such as beams and load-supporting walls, or any nonload-supporting member, such as ceiling and nonload-supporting walls.

(69)Surfactant: Chemical wetting agent added to water to improve penetration.

(70)Visible Emissions: Emissions containing particulate material that are visually detectable without the aid of instruments.

(71)Washroom: Room between the work area and the holding area in the equipment decontamination enclosure system where equipment and waste containers are wet cleaned and/or HEPA-vacuumed prior to disposal.

(72)Wet Cleaning: Removal of asbestos fibers from building surfaces and objects by using cloths, mops, or other cleaning tools which have been dampened with amended water.

(73)Work Area: Designated excavation, spaces, or areas within a trench or structure where asbestos abatement activities take(s) place.

(74)Worker Decontamination Enclosure System: Portion of a decontamination enclosure system designed for controlled passage of workers and authorized visitors, consisting of a clean room, a shower room, and an equipment room separated from each other and from the work area by airlocks and curtained doorways.

(75)Work Site: Area where abatement activity is being performed. May be composed of one or more work areas.

67.11.1.6 STANDARD OPERATING PROCEDURES

(A) Develop and implement a written standard procedure for abatement work to ensure maximum protection and safeguard from asbestos exposure of the workers, visitors, employees, public, and environment.

(B) TELEPHONE PAGING DEVICE:

The Contractor or the Contractor's authorized representative shall, at all times during the normal workday or during periods of overtime work under this contract, carry a digital telephone paging device ("Beeper") and/or cellular telephones which can be activated by a telephone number in the 212 or 646 or 718 or 917 area code. The Contractor shall supply the Department of Design and Construction with the activation number for the device and the Contractor is liable to respond back to the calls from DDC within the next one (1) hour period after the Contractor receives calls from DDC. The cost to the Contractor for this device and all charges accruing thereto is deemed included in the price(s) bid for item(s) labeled, "INCREMENTAL COST FOR ASBESTOS ABATEMENT WORK PERFORMED ON EXISTING STEEL PIPE WATER MAIN TO BE REMOVED, COMPLETE".

(C) The standard operating procedure shall ensure:

(1) Tight security from unauthorized entry into the workspace.

(2) Restriction of Contractor's personnel to the immediate work area and access/egress routes.

(3) Donning of proper protective clothing and respiratory protection prior to entering the work area.

(4) Safe work practices in the work place, including provisions for inter-room communications, exclusion of eating, drinking, smoking, or in any way breaking the respiratory protection.

(5) Proper exit practices from the work space to the outside through the showering and decontamination facilities.

(6) Removing asbestos in ways that minimize release of fibers.

(7) Packing, labeling, loading, transporting, and disposing of contaminated material in a way that minimize exposure and contamination.

(8) Emergency evacuation procedures, for medical or safety situations, to minimize the potential exposure to airborne asbestos fibers for emergency personnel, and building environment.

(9) Safety from accidents in the workspace, especially from electrical shocks, fall hazards associated with scaffolding, slippery surfaces, and entanglements in loose hoses and equipment.

(10) Provisions for effective supervision, air monitoring and personnel monitoring for exposure during the work.

(11) Engineering systems that minimize exposure to fibers within the workspace.

(D) Provide an Asbestos Handler Supervisor to provide continuous supervision of all work, and to be responsible for the following:

(1) Ensure that individuals are using proper personal protective equipment and are trained in its use.

(2) Maintain entry log records and ensure that they are recorded in accordance with the provisions of Title 15, Chapter 1 of RCNY.

(3) Surveillance of the work areas at a minimum of once per work shift or as required by Title 15, Chapter 1 of RCNY, to ensure that the workers personal protective equipment is not torn or ripped and that respiratory protection is worn at all times.

(4) Ensure that sufficient personal protective equipment is stored in the clean room.

(5) Take precautions to prevent heat stress. Precautions include, but are not limited to, selecting lightweight protective clothing, reducing the work rate, and providing adequate fluid breaks.

(E) ENGINEERING CONTROLS:

(1) The 8-hour time weighted average airborne concentration of fibers to which any passerby may be exposed shall not exceed 0.01-fibers per cubic centimeter of air when fibers have a physical dimension longer than 5-micrometers as determined by the method prescribed in these specifications.

(2) All large asbestos projects shall utilize negative pressure ventilation equipment.

(3) The negative pressure ventilation equipment shall operate continuously, 24-hours a day, from the establishment of isolation barriers through successful clearance air monitoring. If such equipment shuts off, adjacent areas shall be monitored for asbestos fibers.

(4) On loss of negative pressure or electric power to the negative pressure ventilating units, abatement shall stop immediately and shall not resume until power is restored and negative pressure ventilation equipment is operating again.

(5) Negative pressure ventilation equipment shall be exhausted to the outside of the tent enclosure away from passer-by and/or sidewalks.

(a) At no time shall the negative pressure ventilation unit exhaust with 40-feet of a receptor or adversely affect the intake ports, louvers, or entrances for the adjacent buildings.

(b) Heavy duty ducting of equivalent, or larger, shape and dimension as that of the negative pressure ventilation exhaust port shall be used to exhaust to the structure.

(c) All ducting shall be sealed and braced or supported to maintain airtight joints.

(6) Where ducting to the outside is not possible, a second negative pressure ventilation unit compatible with the primary unit's capacity shall be connected in series. The area receiving the exhaust shall have sufficient, nonrecycling exhaust capacity to the outside of the structure.

(7) In the event that there is a failure of the containment system or a breach in the Isolation Barriers, all abatement work will cease and the Contractor will immediately correct the condition. Abatement work will not resume until the work area has been smoke tested by the third party laboratory and approved by the Project Monitor.

(F) LOCKDOWN ENCAPSULATION PROCEDURES:

The following procedures shall be followed to seal in nonvisible residue while conducting lockdown encapsulation on all surfaces from which ACM is removed:

(a) Only encapsulants rated as acceptable or marginally acceptable on the basis of Battelle Columbus Laboratory test procedures and rating requirements developed under the 1978 USEPA Contract shall be used for lockdown encapsulation.

(b) The encapsulant solvent or vehicle shall not contain a volatile hydrocarbon unless reviewed and approved by DEP.

(c) Latex paint with solids content greater than 15-percent shall be considered a lockdown sealant for coating all nonmetallic surfaces.

(d) Encapsulants shall be applied using airless spray equipment. Spraying is to occur at the lowest pressure range possible to minimize fiber release from encapsulant impact at the surface. It shall be applied with a consistent horizontal or vertical motion.

67.11.1.7 NOTIFICATIONS, PERMITS, WARNING SIGNS, LABELS, AND POSTERS

(A) Erect bilingual (English-Spanish) warning signs around the excavation and at every point of potential entry from the street level which can be viewed by the public without obstruction, in accordance with OSHA 29 CFR 1926.1101 (K) (Sign Specifications) and Title 15, Chapter 1 of RCNY. The warning signs shall be a bright color so that they will be easily noticeable. The size of the sign and the size of the lettering shall be no less than OSHA requirements.

(B) Provide the required labels for all polyethylene bags and all drums utilized to transport contaminated material to the landfill in accordance with OSHA 29 CFR 1926.1101 (K)(2) and by 49 CFR Parts 171 and 172 of the Department of Transportation regulations.

(C) Provide any other signs, labels, warnings, and posted instructions that are necessary to protect, inform and warn people of the hazard from asbestos exposure. Post in a prominent and convenient place for the workers a copy of the latest applicable regulations from OSHA, EPA, NIOSH, State of New York and New York City and any additional items mandated for posting by the aforementioned regulations.

(D) Furnish all permits, variances and notices required to perform the work.

67.11.1.8 EMERGENCY PRECAUTIONS

(A) Establish emergency exit(s) from the work area. The clean side of all emergency exits shall be equipped with two full sets of protective clothing and respirators at all times.

(B) Notify local medical emergency personnel, both ambulance crews and hospital emergency room staff prior to commencement of abatement operations as to the possibility of having to handle contaminated or injured workmen, and shall be advised on safe decontamination.

(C) Prepare to administer first aid to injured personnel after decontamination. Seriously injured personnel shall be treated immediately or evacuated immediately for decontamination. When an injury occurs, precautions shall be taken to reduce airborne fiber concentrations (i.e. misting of the air with water) until the injured person has been removed from the work area.

(D) Notify, before actual removal of the asbestos material, the local police and fire departments to the danger of entering the excavated area where removal is taking place. Contractor shall make every effort to help these agencies form plans of action should their personnel need to enter the contaminated area.

67.11.1.9 SUBMITTALS

(A) Pre-Construction Submittals:

Attend a pre-construction meeting scheduled by the City of New York Department of Design and Construction. This meeting shall also be attended by a designated representative of the City of New York third party air monitoring firm and the Engineer. At this meeting, the Contractor shall present three (3) copies of the following items, bound and indexed: The detailed plan of action must be submitted at least five (5) days prior to the pre-construction meeting.

(a) Contractor's scope of work, work plan and schedule.

(b) Notifications to Government Agencies.

(c) Copies of permits, clearance and licenses if required.

(d) Schedules: The Contractor shall provide to the Engineer a copy of the following schedules for approval. Once approved, schedules shall be maintained and updated as received. The Contractor shall post a copy of all schedules at the site:

(1) A construction schedule stating critical dates of the project including, but not limited to, mobilization, work area preparation, demolition, gross removal, fine cleaning, encapsulation, inspections, clearance monitoring, and phase of refinishing and final inspections. The schedule shall be updated biweekly, at a minimum.

(2) A schedule of staffing stating number of workers per shift per activity, name and number of supervisor(s) per shift, shifts per day, and total days to be worked.

(3) Submit all changes in schedule or staffing to the Engineer prior to implementation.

(4) A schedule of equipment to be used including numbers and types of all major equipment such as HEPA Air Filtration Units, HEPA-vacuums, airless sprayers, Water Atomizing Devices and Type "C" compressors.

(e) A written plan and shop drawings for preparation of work site and decontamination chamber.

(f) Description of protective clothing and approved respirator to be used, make, model, NIOSH approval numbers.

(g) Delineation of responsibility of work site supervision, including competent person, with names, resumes, and home telephone numbers.

(h) Explanation of decontamination sequence and isolation techniques.

(i) Description of specific equipment to be utilized, including make and model number of air filtration devices, vacuums, sprayers, etc.

(j) Description of any prepared methods, procedures, techniques, or equipment other than those specified in the contract documents.

(k) Explanation of the handling of contaminated wastes including EPA and NYCDEP identification numbers of Waste Hauler.

(l) Description of the final clean-up procedures to be used.

(m) Name and qualifications of Contractor's testing laboratory including AIHA accreditation, and proof of NIOSH PAT and NIST/NVLAP Bulk Quality Assurance Proficiency of OSHA samples for approval by the City of New York Department of Design and Construction.

(n) Written description of emergency procedures to be followed in case of injury or fire. This section must include evacuation procedures, source of medical assistance (name and telephone number) and procedures to be used for access by medical personnel (examples: first aid squad and physician). NOTE: Necessary Emergency Procedures Shall Take Priority Over All Other Requirements Of These Specifications.

(o) Material Safety Data Sheets (MSDS) for encapsulants, sealants, firestopping foam, cleaners/disinfectants, spray adhesive and any and all potentially hazardous materials that may be employed on the project. No work involving the aforementioned will be allowed to proceed until MSDS are reviewed.

(p) Worker Training And Medical Surveillance: Contractor shall submit a list of the persons who will be employed by The Contractor and the Contractor's Subcontractors in the removal work. Present evidence that workers have received proper training required by the regulations and the medical examinations required by OSHA 29 CFR 1926.1101.

(q) Logs: Specimen copies of daily progress log, visitor's log, and disposal log.

(1) The Contractor shall provide a permanently bound log book of minimum 8-1/2" x 11" size at the entrance to the Worker and Waste Decontamination enclosure system as hereinafter specified. Log book shall contain on title page the project name, name, address and phone number of Environmental Control Representative; name, address and phone number of Abatement Contractor; name, address and phone number of Contractor and City's air testing entity; and, emergency numbers including, but not limited to local Fire/Rescue Department. Log book shall contain a list of personnel approved by the laboratory for entry into the work area.

(2) All entries into the log shall be made in nonwashable, permanent ink and such pen shall be strung to or otherwise attached to the log to prevent removal from the log-in area. Under no circumstances shall pencil entries be permitted. Any significant events occurring during the abatement project shall be entered into the log. Upon completion of the job, the Contractor shall submit the logbook containing a day-to-day record of personnel log entries countersigned by the Project Monitor everyday.

(r) Worker's Acknowledgments: Submit statements signed by each employee that the employee has received training in the proper handling of ACM understands the health implications and risks involved; and understands the use and limitations of the respiratory equipment to be used.

(B) Submit copies of the following items to the Project Monitor during the work:

(1) Security and safety logs showing names of person entering workspace, date and time of entry and exit, record of any accident, emergency evacuation, and any other safety and/or health incident.

(2) Progress logs showing the number of workers, supervisors, hours of work and tasks completed shall be submitted daily to the Engineer.

(3) Contractor's current work progress shall be submitted for review by the Engineer at weekly progress meetings.

(4) All Contractors' air monitoring and inspection results.

(C) Project Closeout Submittals:

Upon completion of the project and as a condition of acceptance, the Contractor shall present two (2) copies of the following items, bound and indexed:

(1) Lien Waivers from Contractor, Subcontractors and Suppliers,

(2) Daily OSHA air monitoring results,

(3) All Waste Manifests (Asbestos and Construction Debris), seals and disposal logs,

(4) Field Sign-In/Sign-Out Logs for every shift,

(5) A Letter of Compliance stating that all the work on this project was performed in accordance with the specifications and all applicable Federal, State and Local regulations,

(6) All Warranties as stated in the specifications,

(7) Fully executed disposal certificates and transportation manifest.

67.11.1.10 QUALITY ASSURANCE

(A) All work required for the completion of this project or called for in this specification must be executed in a workmanlike manner by using the appropriate methods established by regulatory requirements and/or industrial standards. All workmanship or work methods are subject to review and acceptance by the Engineer. Throughout the specification, reference is made to codes and standards which establish qualities, levels or types of workmanship which will be considered acceptable. It is the Abatement Contractor's responsibility to comply with these codes and standards during the execution of this work.

(B) All materials and equipment required or consumed during the work of this contract must meet the minimum acceptable criteria established by codes and standards referenced elsewhere in this specification. Materials and equipment must be submitted for prior approval as part of the Contractor's "Shop Drawings".

(C) It is the Abatement Contractor's responsibility, when so required by the specification or upon written request from the Commissioner or the Commissioner's representative to furnish all required proof that workmanship, materials and/or equipment meet or exceed the codes and standards referenced. Such proof shall be in the form requested, typically a certified report or test conducted by a testing entity approved for that purpose by DDC.

(D) The Contractor shall furnish proof that employees working under the Contractor's supervision have had instruction on the dangers of asbestos exposure, on respirator use, decontamination, and OSHA

regulations. This proof shall be in the form of a notarized affidavit to the effect that the above requirements have been satisfied.

(E) The Contractor will have at all times in the Contractor's possession and in view at the job site the OSHA regulations 29 CFR 1910.1001, and 1926.1101 Asbestos, and Environmental Protection Agency 40 CFR, Part 61, subpart B: National Emission Standard for asbestos, asbestos stripping, work practices and disposal of asbestos waste. The Contractor shall also have one copy of NYC Title 15, Chapter 1 of RCNY and NYS DOL ICR 56 at the job site at all times.

(F) Familiarity With Pertinent Codes And Standards: In procuring all items used in this work, it is the Contractor's responsibility to verify the detailed requirements of the specifically named codes and standards and to verify that the items procured for use in this work meet or exceed the specified requirements, and are suitable for their intended use.

(G) Rejection Of Noncomplying Items: The Commissioner reserves the right to reject items incorporated into the work that fail to meet the specified minimum requirements. The Commissioner further reserves the right, and without prejudice to other recourse that maybe taken, to accept noncomplying items subject to an adjustment in the contract amount as approved by the City.

(H) Applicable Regulations, Codes And Standards: Applicable standards listed in these specifications include, but are not necessarily limited to, standards promulgated by the following agencies and organizations:

(1) United States Environmental Protection Agency (EPA or USEPA)
Region II
Asbestos NESHAPS Contact
Air And Waste Management Division
(Air Compliance Branch) - USEPA
290 Broadway, 21st Floor
New York, New York 10007-1866
212-637-3660

(2) Occupational Safety and Health Administration (OSHA)
Region II - Regional Office
201 Varick Street, Room 908
New York, New York 10014
212-337-2378

(3) National Electrical Code (NEC)
See NFPA

(4) National Fire Protection Association (NFPA)
1 Batterymarch Park
Quincy, Massachusetts 02169-7471
617-770-3000

(5) National Institute for Occupational Safety and Health (NIOSH)
Robert A. Taft Laboratory
4676 Columbia Parkway
Mailstop R12 Cincinnati, Ohio 45226
513-841-4428

(6) Department of Health and Mental Hygiene (DOHMH)
Environmental Investigation
125 Worth Street
New York, New York 10013
212-442-3372

(7) American National Standards Institute (ANSI)
(Successor to USASI and ASA)
25 West 43rd Street (between 5th and 6th Avenue), 4th Floor
New York, New York 10036
212-642-4900

(8) American Society for Testing and Materials (ASTM)
100 Bar Harbor Drive
West Conshohocken, Pennsylvania 19428-2959
610-832-9500

(9) New York City Department of Environmental Protection (NYCDEP)
Bureau of Environmental Compliance
Asbestos Control Program
59-17 Junction Boulevard, 8th Floor
Corona, New York 11368
718-595-3682

(10) New York City Department of Sanitation
125 Worth Street, Room 714
New York, New York 10013
212-566-1066

(11) New York State Department of Labor (NYSDOL)
Division Of Safety And Health
Engineering Services Unit
State Office Building Campus
Albany, New York 12240-0010

(I) Post all applicable regulations in a conspicuous place at the job site. Assure that the regulations are not altered, defaced or covered by other materials. One copy of each regulation must also be kept at the Contractor's office.

67.11.1.11 CITY/CONTRACTOR RESPONSIBILITIES

(A) The City will not enter the portions of the excavation, in which work is being performed during the entire asbestos removal operation, including completion of clean up.

(B) The Contractor shall provide a plan for 24-hours job security both for prevention of theft and for barring entry of curious but unprotected personnel into work areas.

(C) The Contractor shall provide own means of power if needed and the City will not be held responsible for the downtime due to faulty Contractor's equipment.

(D) The Contractor shall provide, at Contractor's own expense, all electrical, water, and waste connections, tie-ins, extensions, and construction materials, supplies, etc. At the end of each shift, the Contractor shall disconnect all hoses within the work zone and place in equipment room of the worker decontamination unit. The Contractor shall ensure positive shutoff of all water to work area during nonworking hours.

(E) All temporary facilities required to be installed, shall be subject to the approval of the Commissioner. Prior to starting the work at any site; specify clearly the temporary locations of facilities preferably with sketches and submit the same to the Engineer for approval.

(F) The Contractor shall provide water needed to conduct the required asbestos abatement. All temporary plumbing or adaptations to supply the needs of the work area shall be installed and removed by the Contractor and the cost thereof included in the unit price bid for abatement work.

Shower water for the decontamination unit shall be provided hot. Heating of water, if necessary, shall be provided by the Contractor.

(G) Any additional electrical equipment (i.e. transformers, etc.), which is necessary shall be at the Contractor's expense.

(H) The Contractor shall provide fire protection in accordance with all State and Local fire codes.

(I) Any parts of the service lines, within the excavated work area, disturbed or damaged by the installation and/or removal of the temporary service lines, shall be restored to their original condition by the Contractor to the satisfaction of the respective utility company.

(J) Contractor shall supply hot shower water necessary for use in the decontamination unit.

67.11.1.12 USE OF THE AREA

(A) The Contractor shall confine Contractor's apparatus, the storage of materials, and supplies, and the operation of the Contractor's workmen to limits established by law, ordinances, and the directions of the Engineer. All flammable or combustible materials shall be properly stored to obviate fire and in areas approved by the Engineer.

(B) The Contractor shall assure of a clear path out of the excavated area, that appropriate safety barriers are established to prevent access, and that work areas are kept neat, clean, and safe.

(C) All surrounding work, fixtures, soil lines, drains, water lines, gas pipes, electrical conduit, wires, utilities, etc. which are to remain in place shall be carefully protected and, if disturbed or damaged, shall be repaired or replaced as directed by the City in accordance with the terms of this contract.

(D) Attention is specifically drawn to the fact that other contractors, performing the work of other contracts, may be (or are) brought upon any of the work sites of this contract. Therefore, the Contractor shall not have exclusive rights to any site of work and shall fully cooperate and coordinate Contractor's work with the work of other contractors who may be on (or are on) any site of the work of this contract. Regulated area exempted.

(E)Temporary toilet facilities must be provided by the Contractor on the site. Coordinate location of such facilities with the Engineer.

67.11.1.13 PROTECTION AND DAMAGE

(A) The Contractor is responsible to cover and protect all equipment that cannot be removed from work areas.

(B) No materials or debris shall be thrown within the excavated area.

(C) Debris shall be removed from the work site daily. Work area shall be left neat and clean after each work shift, so that work may proceed the next regular workday without interruption. Limited bag storage may take place within the work area when approved by the Engineer.

67.11.1.14 RESPIRATORY PROTECTION REQUIREMENTS

(A) Respiratory protection shall be worn by all individuals who may be exposed to asbestos fibers from the initiation of the asbestos project until all areas have successfully passed clearance air monitoring in accordance with regulations and these specifications.

(B) The Contractor shall develop and implement a written respiratory protection program with required site-specific procedures and elements. The program shall be administered by a properly trained individual. The written respiratory protection program shall include the requirements set forth in OSHA Standard 29 CFR 1910.134, at a minimum.

(C) The Contractor shall provide workers with individually issued and marked respiratory equipment. Respiratory equipment shall be suitable for the asbestos exposure level(s) in the work area(s), as specified in OSHA Standards 26 CFR 1910.134 and 29 CFR 1926.1101, NIOSH Standard 42 CFR 84, or as more stringently specified otherwise, herein.

(D) Where respirators with disposable filter parts are employed, the Contractor will provide sufficient filter parts for replacement as necessary or as required by the applicable regulation.

(E) All respiratory protection shall be NIOSH approved.. All respiratory protection shall be provided by the Contractor, and used by workers in conjunction with the written respiratory protection program.

(F) Contractor shall provide respirators selected by an Industrial Hygienist that meet the following requirements:

AIRBORNE CONCENTRATION OF ASBESTOS OR CONDITIONS OF USE	REQUIRED RESPIRATOR
Not in excess of 1-fibers per cubic centimeter (f/cc), ten (10) times Permissible Exposure Level (PEL)	Half-mask air purifying respirator, other than a disposable respirator, equipped with high efficiency filters.
Not in excess of 5-f/cc, 50 times PEL	Full face-piece air-purifying respirator equipped with high efficiency filters.
Not in excess of 100-f/cc, 1,000 times PEL	Powered air purifying respirator equipped with equipped with high efficiency filters or any supplied air respirator operated in continuous flow mode.
Not in excess of 100-f/cc, 1,000 times PEL	Full face-piece supplied air respirator operate in pressure demand mode.
Greater than 1,000-f/cc, 10,000 times PEL, or unknown concentration	Full face-piece supplied air respirator operate in pressure demand mode, equipped with an auxiliary positive pressure self-contained breathing apparatus.

(G) Selection of high efficiency filters:

(1) All high efficiency filters shall have a nominal efficiency rating of 100 (99.97-percent effective) when tested against 0.3-micrometer monodisperse diethyl-hexyl phthalate (DOP) particles.

(2) Choose N-, R-, or P- series filters based upon the presence or absence of oil particles.

(a) N- series filters shall only be used for non-oil solid and water based aerosols or fumes.

(b) R- and P -series filters shall be used when oil aerosols or fumes (i.e., lubricants, cutting fluids, glycerin, etc.) are present. The R- series filters are oil resistant and the P- series filters are oil proof.

(c) Follow filter manufacture recommendations.

(3) If a vapor hazard exists, use an organic vapor cartridge in combination with the high efficiency filter.

(H) Historical airborne fiber level data may serve as the basis for selection of the level of respiratory protection to be used for an abatement task. Historical data provided by the Contractor shall be based on personal air monitoring performed during work operations closely resembling the processes, type of material, control methods, work practices, and environmental conditions present at the site. Documentation of aforementioned results may be requested by the City and/or Testing Laboratory for review. This will not relieve the Contractor from providing personal air monitoring to

determine the time-weighted average (TWA) for the work under contract. The TWA shall be determined in accordance with 29 CFR 1926.1101.

(I) At no time during actual removal operations shall half-mask air purifying respirators be allowed unless a full 8-hour TWA and excursion limit have been conducted, and reviewed by the Project Monitor. Use of single use dust respirators is prohibited for the above respiratory protection.

(J) Workers shall be provided with personally issued and individually marked respirators. Respirators shall not be marked with any equipment that will alter the fit of the respirator in any way. Only waterproof identification markers shall be used.

(K) The Contractor shall ensure that the workers are qualitatively or quantitatively fit tested by an Industrial Hygienist initially and every 12-months thereafter with the type of respirator the Contractor will be using.

(L) Whenever the respirator design permits, workers shall perform the positive and negative air pressure fit test each time a respirator is worn. Powered air-purifying respirators shall be tested for adequate flow as specified by the manufacturer.

(M) No facial hairs (beards) shall be permitted to be worn when wearing respiratory protection that requires a mask-to-face seal.

(N) If a worker wears glasses, a spectacle kit to fit their respirator shall be provided by the Contractor at the Contractor's expense.

(O) Respiratory protection maintenance and decontamination procedures shall meet the following requirements:

(1) Respirators shall be inspected and decontaminated on a daily basis in accordance with OSHA 29 CFR 1910.134 (b); and,

(2) High efficiency filters for negative pressure respirators shall be changed after each shower; and,

(3) Respiratory protection shall be the last piece of worker protection equipment to be removed. Workers must wear respirators in the shower when going through decontamination procedures as stated in Subsection 67.11.3.3; and,

(4) Airline respirators with high efficiency filtered disconnect shall be disconnected in the equipment room and worn into the shower. Powered air-purifying respirator face pieces shall be worn into the shower. Filtered/power pack assemblies shall be decontaminated in accordance with manufacturers recommendations; and,

(5) Respirators shall be stored in a dry place and in such a manner that the face-piece and exhalation valves are not distorted; and,

(6) Organic solvents shall not be used for washing of respirators.

(P) Authorized visitors shall be provided with suitable respirators and instruction on the proper use of respirators whenever entering the work area. Qualitative fit test shall be done to ensure proper fit of respirator.

67.11.1.15 PROTECTIVE CLOTHING

(A) Provide worker protection as required by the most stringent OSHA and/or EPA standards applicable to the work. Provide to all workers, foremen, superintendents, authorized visitors and inspectors, protective disposable clothing consisting of full-body coveralls, head covers, gloves and 18-inch high boot type covers or reusable footwear.

(B) In addition to personal protective equipment for workers, the Contractor shall make available at each worksite at least four (4) additional uniforms and required respiratory equipment each day for personnel who are authorized to inspect the work site. The Contractor shall also provide, for the duration of the work at any site involving a decontamination unit for worksite access, a lockable storage locker for use by the Engineer. In addition to respiratory masks for workers, the Contractor must have on hand at the beginning of each work day, at least four (4) masks each with two (2) sets of fresh filters, for use by personnel who are authorized to inspect the worksite. The Contractor shall check for proper fit of the respirators of all City personnel authorized to enter the work area.

(C) Asbestos handlers involved in tent procedures shall wear two (2) disposable suits, including gloves, hood and footwear, and appropriate respiratory equipment. All street clothes shall be removed and stored in a clean room within the work site. The double layer personal protective equipment shall be used for installation of the tent and throughout the procedure, if a decontamination unit (with shower and clean room) is contiguous to the work area, only one (1) layer of disposable personal protective equipment shall be required; in this case, prior to exiting the tent the worker shall HEPA vacuum and wet clean the disposable suit.

The outer disposable suit (if two (2) suits are worn) shall be removed and remain in the tent upon exiting. Following the tent disposal and work site clean up the workers shall immediately proceed to a shower at the work site. The inner disposal unit and respirator shall be removed in the shower after appropriate wetting. The disposal clothing shall be disposed of as asbestos-containing waste material. The workers shall then fully and vigorously shower with supplied liquid bath soap, shampoo, and clean dry towels.

(D) Coveralls: Provide disposable full-body coveralls and disposable head covers. Require that they be worn by all workers in the work area. Provide a sufficient number for all required changes for all workers in the work area.

(E) Boots: Provide work boots with non-skid soles, and where required by OSHA, foot protection, for all workers. Provide boots at no cost to workers. Paint uppers of all boots yellow with waterproof enamel. Do not allow boots to be removed from the work area for any reason after being contaminated with ACM and/or dust.

(F) Hard Hats: Provide hard hats as required by OSHA for all workers, and provide a minimum of four (4) spares for Inspectors, visitors, etc. Label all hats with same warning label as used on disposal bags. Require hard hats to be worn at all times that work is in progress that may cause potential head injury. Provide hard hats of the type with polyethylene strap suspension. Require hats to remain in the work area throughout the work. Thoroughly clean and decontaminate and bag hard hats prior to removing them from the work area at the end of the work.

(G) Goggles: Provide eye protection (goggles) as required by OSHA for all workers involved in any activity that may potentially cause eye injury. Require them to be worn at all times during these activities. Thoroughly clean and decontaminate goggles before removing them from the work area.

(H) Gloves: Provide work gloves to all workers, of the type dictated by the work and OSHA Standards. Do not remove gloves from the work area. Dispose of as asbestos-contaminated waste at the end of the work. Gloves shall be worn at all times, except during work area preparation activities that do not disturb ACM.

(I) Reusable footwear, hard hats and eye protection devices shall be left in the contaminated Equipment Room until the end of the asbestos abatement work.

(J) Disposable protective clothing shall be discarded and disposed of as asbestos waste every time the wearer exits from the workspace to the outside through the decontamination facility.

(K) Respirators, disposable coveralls, head covers and foot covers shall be provided by the Contractor for the Project Monitor, Engineer and any other authorized representative who may inspect the work area. Provide two (2) respirators and six (6) respirator filter changes per day.

67.11.1.16 AIR MONITORING - CONTRACTOR

(A) The Contractor shall employ a qualified Industrial Hygiene Laboratory to analyze air samples in accordance with OSHA Regulations, 1926.1101 (Asbestos Standards for Construction) and New York City regulations. All costs for this work shall be deemed included in the price(s) bid for item(s) labeled, "INCREMENTAL COST FOR ASBESTOS ABATEMENT WORK PERFORMED ON EXISTING STEEL PIPE WATER MAIN TO BE REMOVED, COMPLETE".

(B) The Industrial Hygiene Laboratory shall be a current proficient participant in the American Industrial Hygiene Association (AIHA) PAT Program. The laboratory identification number shall be submitted and approved by the City. The laboratory shall be accredited by the AIHA and New York State Department of Health Environmental Laboratory Approval Program (ELAP).

(C) The Industrial Hygiene Laboratory shall also be a current proficient participant in the NIST/NVLAP Quality Assurance Program for the identification of bulk samples. Laboratory identification number shall be submitted to and approved by the City.

(D) The Contractor shall require a competent person (as defined in OSHA 1926.1101) to perform the following functions and to be on-site continuously for the duration of the project:

(1) Monitor the set up of the work area enclosure and ensure its integrity.

(2) Control entry and exit into the work enclosure.

(3) Ensure that employees are adequately trained in the use of engineering controls, proper work practices, proper personal protective equipment and in decontamination procedures.

(4) Insure that employees use proper engineering controls, proper work practices, proper personal protective equipment and proper decontamination procedures.

(5) The competent person (as defined in OSHA1926.1101) shall check for rips and tears in work suits, and ensure that they are mended immediately or replaced.

(E) Air monitoring responsibilities, shall be performed by a representative of the testing laboratory retained by the Contractor.

(F) Contractor shall submit to the City all credentials of the designated (as defined in OSHA 1926.1101) and Industrial Hygiene Laboratory representative for approval.

(G) Air monitoring and inspection shall be conducted by the Contractor's competent person (as defined in OSHA 1926.1101).

(H) Continuous (daily or per shift) monitoring and inspection will include work area samples, personnel samples from the breathing zone of a worker to accurately determine the employees' 8-hour TWA (unless Type C respirators are used) and decontamination unit clean room samples.

(I) Work area samples and employee personnel samples shall be taken using pumps whose flow rates can be determined to an accuracy of ±5-percent, at a minimum of two (2) liters per minute. This must be demonstrated at the job site.

(J) Sampling and analysis methods shall be per NIOSH 7400A.

(K) Test Reports:

(1) Promptly process and distribute one (1) copy of the test results, to the Commissioner.

(2) Prompt reports are necessary so that if required, modifications to work methods and/or practices may be implemented as soon as possible.

(3) Contractor shall by facsimile notify the Commissioner within 24-hours of the results of each test, followed by written notification within three (3) days.

(L) The Contractor's competent person shall conduct inspections and provide written reports daily. Inspections will include checking the standard operating procedures, engineering control systems, respiratory protection and decontamination systems, packaging and disposal of asbestos waste, and any other aspects of the project which may affect the health and safety of the people and environment.

(M) All costs for required air monitoring by the Contractor's competent person shall be borne by the Contractor.

(N) The City reserves the right to conduct air and surface dust sampling in conjunction with and separate from the Testing Laboratory for the purposes of Quality Assurance.

(O) All samples shall be accompanied by a Chain of Custody Record that shall be submitted to the Project Monitor upon completion of analysis.

67.11.1.17 TESTING LABORATORY

(A) The City, at its own expense, will employ the services of an Independent Testing Laboratory. The Testing Laboratory will perform air sampling activities at the site and perform periodic observations of the work site.

(B) The Laboratory will perform analysis of air samples utilizing phase contrast microscopy (PCM) and/or transmission electron microscopy (TEM). This laboratory shall meet the standards stated herein.

(C) Observations will include, but not be limited to, checking the standard operating procedures, engineering control systems, respiratory protection, decontamination systems, packaging and disposal of asbestos waste, and any other aspects of the project that may affect the health and safety of the environment, Contractor, and/or facility occupants.

(D) The Testing Laboratory shall have access to all areas of the asbestos removal project at all times and shall continuously inspect and monitor the performance of the Contractor to verify that said performance complies with this specification. The Testing Laboratory shall be on site throughout the entire abatement operation.

(E) The City will be responsible for costs incurred with the required laboratory work. Any subsequent additional testing required due to limits exceeded during initial testing shall be paid for by the Contractor.

(F) At a minimum, air sampling shall be conducted in accordance with the following schedule:

ABATEMENT ACTIVITY	PRE-ABATEMENT	DURING ABATEMENT	POST- ABATEMENT
Equal to or greater than 10,000-square feet or 10,000-linear feet of ACM	PCM	PCM	TEM
Less than 10,000-square feet or 10,000-linear feet of ACM	PCM	PCM	PCM
Exceptions to the above:			
Boiler Rooms	PCM	PCM	PCM
Tent and Glovebag Procedures	PCM	PCM	PCM
Demolitions	PCM	PCM	PCM

Note: TEM is acceptable wherever PCM is required.

(G) Prior to commencement of abatement activities, the Testing Laboratory will collect a minimum number of area samples inside each homogeneous work area.

(1) Samples will be taken during normal activities and circumstances at the work site.

(2) Samplers shall be located within the proposed work area and at all proposed isolation barrier locations.

(3) Samples shall be analyzed using PCM.

(4) The number of samples to be collected will be determined by the size of the project.

(H) Area air sampling during abatement shall be conducted as specified in the following documents except as restricted or modified herein:

(1) Measuring Airborne Asbestos Following An Abatement Action, US EPA document 600/4-85-049 (Nov., 1985);

(2) Guidance For Controlling Asbestos-Containing Materials In Buildings; US EPA Publication 560/5-85-024 (June, 1984);

(3) Methodology For The Measurement Of Airborne Asbestos By Electron Microscopy, US EPA Contract No. 68-02-3266;

(4) Mandatory And Nonmandatory Electron Microscopy Methods, set forth in 40 CFR Part 763, Subpart E, Appendix A;

(5) NIOSH 7400 method using "A" counting rules.

(I) In accordance with the above criteria, area samples (see NYCDEP Asbestos Control Program Regulations) shall conform to the following schedule:

AREA SAMPLES FOR ANALYSIS BY	MINIMUM VOLUME	FLOW RATE
PCM, 25-mm cassettes	560-liters	5 to 15-liters/minute
TEM, 25-mm cassettes	560-liters	1 to 10-liters/minute
TEM, 37-mm cassettes	1,250-liters	1 to 10-liters/minute

(1) All costs resulting from additional air tests and observations shall be borne by the Contractor. These costs may include, but are not limited to, labor, analysis fees, materials, and expenses.

(2) After the area has been found to be in compliance, the Contractor may remove Isolation Barriers, tents if any and perform final cleaning as specified.

(J) Clearance And Excavation Re-entry Criteria:

(1) The clearance criteria shall be applied to each excavated work area independently.

(2) For PCM analysis, the clearance air monitoring shall be considered satisfactory when all of the samples regardless of the size of the project are less than or equal to 0.01-f/cc or the background concentrations, whichever is greater.

(3) For TEM analysis, the clearance air monitoring shall be considered satisfactory when the requirements stated in 40 CFR Part 763, Subpart E, Appendix A, Section IV are met.

(4) As soon as the air monitoring tests are completed, the Testing Laboratory will send the results of such tests to the City and notify the Contractor.

(5) The Contractor shall cooperate fully with all aspects of air monitoring operations.

67.11.1.18 TAMPERING WITH TEST EQUIPMENT

All parties to this contract are hereby notified that any tampering with testing equipment will be considered an attempt at falsifying reports and records to federal and state agencies and each offense will be prosecuted under applicable state and federal criminal codes to the fullest extent possible.

67.11.2 PRODUCTS

67.11.2.1 MATERIALS

(A) Wetting Agents: Surfactant shall consist of resin materials in a water base, that have been tested to ensure materials are nontoxic and nonhazardous. Surfactants shall be installed according to the manufacturer's written instructions.

(B) Encapsulants (Sealants, Lockdown Encapsulants): Encapsulants shall consist of pigmented (nontransparent) liquid material which can be applied to asbestos containing materials or bare surfaces exposed after an abatement which temporarily controls the possible release of asbestos fibers from the material or surface either by creating a membrane over the surface (bridging encapsulant) or by penetrating into the material and binding its components together (penetrating encapsulant). The encapsulant shall be installed according to the manufacturer's written instructions. Sealing materials to be applied to structural members and decking assemblies scheduled to receive spray-applied fireproofing shall be approved by UL for use with the specified material.

(C) Fire Retardant Polyethylene Sheeting: Minimum uniform thickness of 6-mil. Provide largest size possible to minimize seams.

(D) Fire Retardant Reinforced Polyethylene Sheeting: For covering floor of decontamination units, provide translucent, nylon reinforced or woven polyethylene laminated, fire retardant polyethylene sheeting. Provide largest size possible to minimize seams, minimum uniform thickness 6-mil.

(E) Drums: Asbestos-transporting drums, sealable and clearly marked with warning labels as required by OSHA and EPA.

(F) Polyethylene Disposal Bags: Asbestos disposal bags, minimum of 6-mil thick. Bags shall be clearly marked with warning labels as required by OSHA and EPA.

(G) Signs: Asbestos warning signs for posting at perimeter of work area, as required by OSHA and EPA.

(H) Waste Container Bag Liners And Flexible Trailer Trays: One piece leak-resistant flexible tray with absorbent pad.

(I) Tape: Provide tape which is of high quality with an adhesive that is formulated to aggressively stick to sheet polyethylene.

(J) Spray Adhesive: Provide spray adhesive in aerosol cans which is specifically formulated to stick tenaciously to sheet polyethylene.

(K) Flexible Duct: Spiral reinforced flex duct for air filtration devices.

(L) Protective Clothing: Workers shall be provided with sufficient sets of properly fitting, full-body, disposable coveralls, head covers, gloves, and 18-inch high boot-type foot covers. Protective clothing shall conform to OSHA Standard 29 CFR 1926.1101.

67.11.2.2 TOOLS AND EQUIPMENT

(A) Air Filtration Device (AFD): AFDs shall be equipped with High Efficiency Particulate Air (HEPA) filtration systems and shall be approved by and listed with Underwriter's Laboratory.

(B) Transportation Equipment: Transportation Equipment, as required, shall be suitable for loading, temporary storage, transit and unloading of contaminated waste without exposure to persons or property. Any temporary storage containers positioned outside the excavated work area for temporary storage shall be metal, closed and locked.

(C) Vacuum Equipment: All vacuum equipment utilized in the work area shall utilize HEPA filtration systems.

(D) Vacuum Attachments: Soft Brush Attachment, Asbestos Scraper Tool, Drill Dust Control Kit.

(E) Electric Sprayer: An electric airless sprayer suitable for application of encapsulating material and shall be approved by and listed with Underwriters Laboratory.

(F) Water Sprayer: The water sprayer shall be an airless or other low-pressure sprayer for amended water application.

(G) Water Atomizer: Powered air-misting device equipped with a ground fault interrupter and equipped to operate continuously.

(H) Brushes: All brushes shall have nylon bristles. Wire brushes are excluded from use due to their potential to shred asbestos fibers into small, fine fibers. Wire brushes may be used for cleaning pipe joints within glove-bags upon written approval of the Engineer.

(I) Hand Power Tools: Shall be equipped with HEPA-filtered local exhaust ventilation if used to drill, cut into or otherwise disturb ACM.

(J) Other Tools And Equipment: The Contractor shall provide other suitable tools for the stripping, removal, encapsulation, and disposal activities including but not limited to: hand-held scrapers, sponges, rounded-edge shovels, brooms, and carts.

(K) Fans And Leaf Blower: Provide Leaf Blower (one leaf blower per floor) and one 20-inch diameter fans for each 10,000-cubic feet of work area volume to be used for aggressive sampling technique for clearance air testing.

(L) Fire Extinguishers: Provide type "A" fire extinguishers in spaces where there is minimal danger of electrical or grease-oil-flammable liquid fires. In other areas, provide type "ABC" dry chemical extinguishers of NFPA recommended types for the exposure in each case. All fire extinguishers shall comply with the applicable recommendations of NFPA Standard 10, "Standard For Portable Extinguishers." Provide a minimum of four (4) fire extinguishers in each work area; one in the equipment room of the decontamination unit, one outside the work area in the clean room or directly outside same, and two fire extinguishers where they are most effective for their intended purpose. Do not exceed seventy-five (75) feet between fire extinguishers within the workarea.

(M) First Aid Kits: The Contractor shall maintain adequately stocked first aid kits in the clean rooms of the decontamination units and within work areas. The first aid kit shall be approved by a licensed physician for the work to be performed under this contract.

(N) Water Service:

Water Heater: Provide UL rated 40-gallon electric water heaters to supply hot water for Personal Decontamination Enclosure System Shower. Wiring of the water heater shall comply with NEMA, NECA, and UL standards.

(O) Telephone Paging Device:

The Contractor or the Contractor's authorized representative shall, at all times during the normal workday or during periods of overtime work under this contract, carry a digital telephone paging device (Beeper). The device shall be activated by a telephone number in the 718, 212, 646, 917, 800, or 888 area codes. The Contractor shall supply the City with the activation number for the device and respond to calls from the City within one (1) hour. The cost to Contractor for this device and all charges accruing thereto is deemed included in the price(s) bid for item(s) labeled, "INCREMENTAL COST FOR ASBESTOS ABATEMENT WORK PERFORMED ON EXISTING STEEL PIPE WATER MAIN TO BE REMOVED, COMPLETE".

67.11.2.3 CLEANING

(A) Throughout the construction period, the Contractor shall maintain the work area as described in this section.

(1) The Contractor shall prevent excavated areas other than the work area from becoming contaminated with asbestos-containing dust or debris. Should areas outside the work area become contaminated with asbestos-containing dust or debris as a consequence of the Contractor's work practices, the Contractor shall be responsible for cleaning these areas in accordance with the procedures appended in Title 15, Chapter 1 of RCNY and NYSDOL ICR56. All costs incurred in cleaning or otherwise decontaminating nonwork areas and the contents thereof shall be borne by the Contractor at no additional cost to the City.

(2) The Contractor shall provide to all personnel and laborers the required equipment and materials needed to maintain the specified standard of cleanliness.

(B) General:

(1) Waste water from asbestos removal operations, including shower water, may be discharged into the public sewer system only after approved filtration is on operation to remove asbestos fibers.

(2) Asbestos wastes shall be double bagged in six (6) mil (0.006") polyethylene bags approved for ACM disposal and shall be properly labeled and handled before disposal.

(3) The Contractor shall use corrugated cartons or drums for disposal of asbestos-containing waste having sharp edged components (e.g. nails, screws, metal lathe and tin sheeting) that may tear polyethylene bags and sheeting. The waste within the drums or cartons must be double bagged.

(4) The Contractor shall transport all bags of waste to disposal site in thirty (30) gallon capacity metal or fiber drums with tight lids, or in locked steel dumpster.

(5) Dumping of debris, waste or bagged waste will not be permitted.

(6) Cleanup of visible accumulations of loose ACM shall occur whenever there is a sufficient amount to fill a single asbestos bag.

(7) ACM shall be collected utilizing rubber dust pans and rubber squeegees.

(8) HEPA vacuums shall not be used on wet materials unless specifically designed for that purpose.

(9) Metal shovels shall not be used within the work area.

(10) Accumulations of dust shall be cleaned off all surfaces of the work area daily.

(11) Mastic solvent when used will be applied in moderation (e.g. by airless sprayer).

(12)The Contractor shall retain all items in the storage area in an orderly arrangement allowing maximum access, not impeding traffic, and providing the required protection of all materials.

(13)The Contractor shall not allow accumulation of scrap, debris, waste material, and other items not required for use in this work. Asbestos contaminated waste must not be kept on the work site overnight.

(14)At least twice a week (more if necessary), the Contractor shall completely remove all scrap, debris and waste material from the job site.

(15)The Contractor shall provide adequate storage space for all items awaiting removal from the job site, observing all requirements for fire protection and concerns for the environment.

(16)All respiratory protection equipment shall be selected from the latest NIOSH Certified Equipment list.

(17)Daily and more often, if necessary, the Contractor shall inspect the work areas and adjoining spaces, and pick up all scrap, debris, and waste material. All such items shall be removed to the place designated for their storage.

(18)Weekly, and more often, if necessary, the Contractor shall inspect all arrangements of materials stored on the site; re-stack and tidy them or otherwise service them to meet the requirements of these specifications.

(19)The Contractor shall maintain the site in a neat and orderly condition at all times.

67.11.3 EXECUTION

67.11.3.1 WORKER DECONTAMINATION FACILITY

(A) Large Asbestos Projects (Small Project Option):

Provide a worker decontamination facility in accordance with, Title 15, Chapter 1, OSHA Standard 29 CFR 1926.1101, 12NYCRR Part 56 and as specified herein. Worker decontamination shall be in accordance of the NYCDEP approved procedure for removing asbestos containing coal tar wrap.

(a) Structure:

(1) Use modular systems or build using wood or metal frame studs, joists, and rafters placed at a maximum of 16-inches on-center.

(2) When worker decontamination unit is located outdoors, in areas with public access, or in correctional facilities, frame work shall be lined with minimum 3/8" thickness plywood sheathing. Sheathing shall be caulked or taped airtight at all joints and seams.

(3) Interior shall be covered with two (2) layers of opaque 6-mil polyethylene sheeting, with a minimum overlap of 12-inches at seams. Seal seams airtight using tape and adhesive. The interior floor shall be covered with two (2) layers of reinforced fire-retardant polyethylene sheeting with a minimum overlap on the walls of twelve (12) inches.

(4) Entrances to the decontamination unit shall be secured with lockable hinged doors. Doors shall be open at all times when abatement operations are in progress. Doors shall be louvered to allow for air movement through the decontamination units into work area.

(b) Curtained Doorways: A device to allow ingress or egress from one room to another while permitting minimal air movement between the rooms.

(c) Air Locks: Air locks shall consist of two curtained doorways placed a minimum of three (3) feet apart.

(d) Decontamination Enclosure System shall be placed adjacent to the work area and shall consist of three (3) totally enclosed chambers, separated from work area and each other by airlocks, as follows:

(1) Equipment Room: The equipment room shall have a curtain doorway to separate it from the work area, and share a common airlock with the shower room. The equipment room shall be large enough to accommodate at least one (1) worker (allowing them enough room to remove their protective clothing and footwear), and a 6-mil disposal bag for collection of discarded clothing and equipment. The equipment room shall be utilized for the storage of equipment and tools after decontamination using a HEPA-vacuum and/or wet cleaning. A one-day supply of replacement filters, in sealed containers, for HEPA-vacuums and negative air machines, extra tools, containers of surfactant, and other materials and equipment required for the project shall be stored here. A walk-off pan filled with water shall be placed in the work area just outside the equipment room for persons to clean foot coverings when leaving the work area. Contaminated footwear and reusable work clothing shall be stored in this room.

(2) Shower Room: The shower room shall have two (2) airlocks (one that separates it from the equipment room and one that separates it from the clean room). The shower room shall contain at least one (1) shower, with hot and cold water adjustable at the tap, per eight (8) workers. Careful attention shall be given to the shower to ensure against leaking of any kind. Contractor shall supply towels, shampoo and liquid soap in the shower room at all times. Shower water shall be drained collected, and filtered through a system with at least a 5-micron particle size collection capacity. A system containing a series of several filters with progressively smaller pore sizes shall be used to avoid rapid clogging of the filters by large particles. Filtered water shall be discharged in accordance with applicable codes. Contaminated filters shall be disposed of as asbestos waste.

(3) Clean Room: The clean room shall share a common airlock with the shower room and shall have a curtained doorway to separate it from outside noncontaminated areas. Lockers, for storage of workers' street clothing, and shelves, for storing respirators, shall be provided in this area. Clean disposable clothing, replacement filters for respirators, and clean dry towels shall be provided in the clean room. The clean room shall not be used for the storage of tool, equipment or other materials.

(B) Small Asbestos Projects:

Provide a worker decontamination facility in accordance with, Title 15, Chapter 1, OSHA Standard 29 CFR 1926.1101, 12NYCRR Part 56 and as specified herein. Unless approved by NYCDEP and the City, worker decontamination facilities shall be attached to the work areas.

(a) Structure:

(1) Use modular systems or build using wood or metal frame studs, joists, and rafters placed at a maximum of 16-inches on-center.

(2) When worker decontamination unit is located outdoors, in areas with public access, or in correctional facilities, frame work shall be lined with minimum 3/8" thickness plywood sheathing. Sheathing shall be caulked or taped airtight at all joints and seams.

(3) Interior shall be covered with two (2) layers of opaque 6-mil polyethylene sheeting, with a minimum overlap of 12-inches at seams. Seal seams airtight using tape and adhesive. The interior floor shall be covered with two (2) layers of reinforced fire-retardant polyethylene sheeting with a minimum overlap on the walls of twelve (12) inches.

(4) Entrances to the decontamination unit shall be secured with lockable hinged doors. Doors shall be open at all times when abatement operations are in progress. Doors shall be louvered to allow for air movement through the decontamination units into work area.

(b) Curtained Doorways: A device to allow ingress or egress from one room to another while permitting minimal air movement between the rooms.

(c) Air Locks: Air locks shall consist of two (2) curtained doorways placed a minimum of three (3) feet apart.

(d) Decontamination Enclosure System shall be placed adjacent to the work area and shall consist of three (3) totally enclosed chambers, separated from work area and each other by airlocks, as follows:

(1) Shower Room: The shower room shall have two (2) airlocks (one that separates it from the work area and one that separates it from the clean room). The shower room shall contain at least one (1) shower, with hot and cold water adjustable at the tap, per eight (8) workers. Careful attention shall be given to the shower to ensure against leaking of any kind. The Contractor shall supply towels, shampoo and soap in the shower room at all times. Shower water shall be drained collected, and filtered through a system with at least a 5-micron particle size collection capacity. A system containing a series of several filters with progressively smaller pore sizes shall be used to avoid rapid clogging of the filters by large particles. Filtered water shall be discharged in accordance with applicable codes. Contaminated filters shall be disposed of as asbestos waste.

(2) Clean Room: The clean room shall share a common airlock with the shower room and shall have a curtained doorway to separate it from outside noncontaminated areas. Lockers, for storage of workers' street clothing, and shelves, for storing respirators, shall be provided in this area. Clean disposable clothing, replacement filters for respirators, and clean dry towels shall be provided in the clean room. The clean room shall not be used for the storage of tools, equipment or other materials.

(C) Decontamination Enclosure System Utilities: Lighting, heat, and electricity shall be provided as necessary by the Contractor, and as specified herein.

67.11.3.2 WASTE DECONTAMINATION FACILITY

(A) Large Asbestos Project (Small Project Option):

Provide a worker decontamination facility in accordance with, Title 15, Chapter 1, OSHA Standard 29 CFR 1926.1101, 12NYCRR Part 56 and as specified herein. Unless approved by NYCDEP and the City, worker decontamination facilities shall be attached to the work areas.

(a) Structure:

(1) Use modular systems or build using wood or metal frame studs, joists, and rafters placed at a maximum of 16-inches on-center.

(2) When worker decontamination unit is located outdoors, in areas with public access, or in correctional facilities, frame work shall be lined with minimum 3/8" thickness plywood sheathing. Sheathing shall be caulked or taped airtight at all joints and seams.

(3) Interior walls shall be covered with two (2) layers of opaque 6-mil polyethylene sheeting, with a minimum overlap of 12-inches at seams. Seal seams airtight using tape and adhesive. The interior floor shall be covered with two (2) layers of reinforced fire-retardant polyethylene sheeting with a minimum overlap on the walls of twelve (12) inches.

(4) Entrances to the decontamination unit shall be secured with lockable hinged doors. Doors shall be open at all times when abatement operations are in progress. Doors shall be louvered to allow for air movement through the decontamination units into the work area.

(b) Curtained Doorways: A device to allow ingress or egress from one room to another while permitting minimal air movement between the rooms.

(c) Air Locks: Air locks shall consist of two (2) curtained doorways placed a minimum of three (3) feet apart.

(d) Decontamination Enclosure System shall be placed adjacent to the work area and shall consist of three (3) totally enclosed chambers, separated from the work area and each other by airlocks, as follows:

(1) Washroom: An equipment washroom shall have two (2) air locks (one separating the unit from the work area and one common air lock that separates it from the holding area. The washroom shall have facilities for washing material containers and equipment. Gross removal of dust and debris from contaminated material containers and equipment shall be accomplished in the work area, prior to moving to the washroom.

(2) Holding Area: A holding area shall share a common air lock with the equipment washroom and shall have a curtained doorway to outside areas. A hinged, lockable door shall be placed at the holding area entrance to prevent unauthorized access into the work area.

(B) Decontamination Enclosure System Utilities: Lighting, heat, and electricity shall be provided as necessary by the Contractor, and as specified herein.

67.11.3.3 PERSONNEL ENTRANCE AND DECONTAMINATION PROCEDURES FOR REMOVAL OPERATIONS UTILIZING REMOTE DECONTAMINATION FACILITIES

(A) All individuals who enter the work area shall sign the entry log, located in the clean room, upon each entry and exit. The log shall be permanently bound and shall fully identify the facility, agents, contractor(s), the project, each work area, and worker respiratory protection employed. The job supervisor shall be responsible for the maintenance of the log during the abatement activity.

(B) Each worker shall remove street clothes in the clean room; wear two (2) disposable suits, including gloves, hoods and non-skid footwear; and put on a clean respirator (with new filters) before entering the work area.

(C) Each worker shall, before leaving the work area or tent, clean the outside of the respirators and outer layer of protective clothing by wet cleaning and/or HEPA-vacuuming. The outer disposable suit shall be removed in the airlock prior to proceeding to the Worker Decontamination Unit. The inner disposable suit and respirator shall be wet wiped and HEPA-vacuumed thoroughly before removing and prior to aggressive shower.

(D) Following showering and drying off, each worker or authorized visitor shall proceed directly to the clean room, dress in street clothes, and exit the decontamination enclosure system immediately.

67.11.4 PREPARATION OF WORK AREA AND REMOVAL PROCEDURES

67.11.4.1 REMOVAL OF ASBESTOS-CONTAINING MATERIAL

(A) Contractor shall be responsible for the proper removal of ACM from the work area using standard industry techniques. The Testing Laboratory representative shall observe the work.

General Requirements:

(a) Removal of ACM shall be performed using wet methods. Dry removal of ACM is prohibited.

(b) Spray ACM with amended water with sufficient frequency and quantity to enhance penetration. Sufficient time shall be allowed for amended water to penetrate the material to the substrate prior to removal. All ACM shall be thoroughly wetted while work is being conducted.

(c) Accumulation of standing water on the floor of the work area is prohibited.

(d) Apply removal encapsulants, when used, in accordance with the manufacturer's recommendations and guidelines.

(e) Containerize ACM immediately upon detachment from the substrate.

(f) Pre-Removal Inspections:

(1) Prior to removal of any ACM, the Contractor shall notify the Testing Laboratory and request a pre-removal inspection. Posting of warning signs, building of decontamination enclosure systems, and all other preparatory steps have been taken prior to notification of the Testing Laboratory.

(2) Contractor shall correct any deficiencies observed by Testing Laboratory at no additional cost to City.

(3) Following the Testing Laboratory's approval of the work area preparations, removal of ACM may commence.

(B) Removal of Coal Tar Wrap shall be as follows:

Work shall be performed as outlined in the coal tar wrap removal procedures (see Appendix) approved by the New York City Department of Environmental Protection (NYCDEP).

67.11.4.2 MAINTENANCE OF CONTAINED WORK AREA AND DECONTAMINATION ENCLOSURE SYSTEMS

(A) Ensure that barriers are installed in a manner appropriate to the expected weather conditions during the project and for its duration. Repair damaged barriers and remedy defects immediately upon their discovery. Visually inspect barriers at the beginning and end of each work period.

(B) Visually inspect nonwork areas and the decontamination enclosure system for water leakage. Perform the visual inspection a minimum of two (2) times for each 8-hour work shift.

67.11.5 ASBESTOS WASTE MANAGEMENT

67.11.5.1 ACM WASTE REQUIREMENTS

(A) The Contractor and all subcontractors are specifically alerted to the illegal practice of combining asbestos-containing waste (ACW) from one project with the ACW of other projects without using the services of a permitted waste transfer station as defined by 6 NYCRR Part 360 and 364. As part of the shop drawing submittals, the Contractor must submit for approval the proposed method of transportation and disposal that will be utilized to manage the ACW of this contract. If a permitted transfer station is to be used, the cost shall be included in the bid price. The Contractor must submit a waste manifest consistent with whatever approved method is utilized as part of the invoicing and payment procedures.

(B) The Contractor shall maintain compliance with the strictest set of regulations of Title 15, Chapter 1 of RCNY, NYC LL 70/85, NYS DOL ICR 56, USEPA, Asbestos Regulation 40 CFR Section 61.152, 29

CFR 1926.1101, 29 CFR 1910.1200 (F) of OSHA's Hazard Communication Standards, and other applicable standards.

NOTE: Any penalties incurred for failure to comply with any of the above regulations and/or fines imposed due to negligence of the Contractor will be the sole responsibility of the Contractor.

When presenting ACW for storage at the generation site, the Contractor shall:

(1) Wet down ACW in a manner sufficient to prevent all visible emissions of dust into the air.

(2) Seal material in a leak tight container while wet.

(3) Keep ACW separate from any other waste.

(C) When presenting ACW for storage away from the site of generation, the Contractor shall:

(1) Ensure that ACW has been properly packaged as per requirements above.

(2) Examine the containers of ACW to ensure that there are no breaks in the containers and that no visible dust is being released into the air.

(3) If examination reveals damage to a container of ACW the Contractor or person accepting the waste shall immediately wet down the ACW and repackage it into a clean leak tight container. The subsequent repackaging shall be the financial responsibility of the Contractor and occur at no extra cost to the City.

(4) Keep ACW separate from any other waste.

(D) When storing ACW - The Contractor shall:

(1) Ensure that the ACW has been sufficiently wetted down in tight containers.

(2) Rewet and repackage any damaged containers.

(3) Maintain at storage site an adequate supply of spare leak tight containers.

(4) Maintain at storage site an adequate supply of amended water.

(5) Keep ACW separate from any other waste.

(6) Keep ACW in a secured, enclosed, and locked container.

(7) If the Contractor has intention of sorting a quantity of ACW greater than or equal to 50-cubic yards, the Contractor shall:

Submit a written request and receive written approval from the City.

(E) When presenting for transport, the Contractor shall:

(1) Ensure that ACW has been sufficiently wetted down.

(2) Examine the integrity of the container's airtight seal.

(3) Rewet and repackage any damaged containers.

(4) Keep ACW separate from all other waste.

(5) Ensure that a person transporting asbestos waste holds a valid permit issued pursuant to law.

(6) Frequency of waste removal:

Properly packaged and labeled asbestos waste shall be removed from the site on a daily basis. Under no circumstance shall asbestos waste be stored on site without written approval from the City. The Waste Hauler and landfill shall be as indicated on the notifications to regulatory agencies.

(F) Waste Load-Out Through Equipment Decontamination Enclosure (Full Decontamination Facility): Place asbestos waste in disposal bags. Large items not able to fit into disposal bags shall be wrapped in one (1) layer of 6-mil thick polyethylene sheeting. Clean outer covering of asbestos waste package by wet cleaning and/or HEPA-vacuuming in a designated part of the work area. Move wrapped asbestos waste to the equipment washroom, wet clean each bag or object and place it inside a second disposal bag, or a second layer of 6-mil polyethylene sheeting, as the item's physical characteristics demand. Air volume shall be minimized, and the bags or sheeting shall be sealed airtight with tape.

(1) The clean containerized items shall be moved to the equipment decontamination enclosure holding area pending load-out to storage or disposal facilities.

(2) Workers who have entered the equipment decontamination enclosure system from the uncontaminated nonwork area shall perform load-out of containers from the decontamination enclosure holding area. Dress workers moving asbestos waste to storage or disposal facilities in clean overalls of a color different than from that of coveralls used in the work area. Ensure that workers do not enter from uncontaminated areas into the equipment washroom or the work area. Ensure that contaminated workers do not exit the work area through the equipment decontamination enclosure system.

(3) Thoroughly clean the equipment decontamination enclosure system immediately upon completion of the waste load-out activities, and at the completion of each work shift.

(4) Labeled ACM waste containers or bags shall not be used for non-ACM debris or trash. Any materials placed in labeled containers or bags, including those turned "inside-out", shall be handled and disposed of as ACM waste.

(G) All asbestos materials, wastes, shower water, polyethylene, disposable equipment and supplies shall be disposed of as contaminated waste, in accordance with the EPA regulation (40 CFR, Section 61.150) and those requirements of the New York Department of Environmental Conservation and New York City Department of Sanitation.

(H) All asbestos materials shall be prepared for transportation in accordance with this specification and all applicable Federal, State, County and City Regulations. The Contractor shall submit the following documentation:

(1) Where applicable, an EPA Generator's identification number which has been obtained from the EPA for all asbestos waste generated from the project.

(2) Applicable State Waste Hauler license and registration numbers.

(3) Federal Hazardous Materials Waste Hauler number.

(4) Designated landfill EPA Permit numbers.

(I) Prior to loading asbestos waste the enclosed cargo areas (dumpster) shall be prepared as follows:

(1) Clean via HEPA-vacuum and wet wipe techniques the enclosed cargo areas of all visible debris prior to preparing with polyethylene.

(2) Line the cargo area with two (2) layers of 6-mil polyethylene sheeting to prevent contamination from damaged or leaking containers. Floor sheeting shall be installed first and extend up the walls a minimum of 24-inches. Wall sheeting shall be overlapped and taped securely into place.

(J) Asbestos-containing waste shall be placed on level surfaces in the cargo area of the dumpster and shall be packed tightly to prevent any shifting or tipping of the waste during transportation.

(K) Asbestos-containing waste shall not be thrown into or dropped from the dumpster. All material shall be handled carefully to prevent rupture of the containers.

(L) All personnel engaged in handling and loading of contaminated waste outside of the work area shall wear protective clothing. The disposable clothing shall include head, body and foot protection and color of clothing shall be different from abatement personnel in the work area. Minimum respiratory protection shall be half face, dual cartridge, air purifying respirators with HEPA-filters.

(M) The Contractor shall immediately clean debris or residue observed on containers or surfaces outside of the work area. Cleaning shall be via HEPA equipped wet/dry vacuums only.

(N) All asbestos-containing waste shall be transported from the abatement site to the landfill by a registered Waste Hauler. When transporting ACW:

(1) Ensure that the ACW has been sufficiently wetted down in a leak tight container.

(2) Rewet and repackage any damaged containers.

(3) Maintain at storage site an adequate supply of spare leak tight containers.

(4) Maintain at storage site an adequate supply of amended water.

(5) Keep ACW separate from any other waste.

(O) Keep ACW in a secured, enclosed, and locked container.

(P) Waste transport documents shall conform to the requirements of the U.S. Department of Transportation, Hazardous Materials Transportation Regulation, 49 CFR Part 173 and EPA 40 CFR 61.150 (d)(1)(2). Shipping documents shall be clearly marked with the required designation "RQ Asbestos". The Contractor shall provide a copy of this document to the City.

(Q) A uniform hazardous waste manifest shall be prepared by the Contractor and signed by the Contractor each time the Contractor ships a dumpster load of Asbestos-Containing Waste Material. The uniform hazardous waste manifest shall include the site of waste generation, the names and addresses of the Transporter, the Contractor, and the landfill operator with information on the type and number of asbestos-waste containers, time and date. The Contractor shall provide the Engineer, Testing Laboratory or authorized designated representative with signed copies of the waste manifest before each departure.

(R) The Contractor or the Contractor's registered hazardous Waste Hauler shall transport asbestos-containing waste material from the abatement site directly to the specified disposal site. The Contractor or Waste Hauler shall not accept material from any other site when transporting asbestos-containing waste material from the abatement site. The authorized DDC representative or Engineer reserves the right to travel with Contractor's Waste Hauler to the waste disposal site. No intermediate storage of waste material (i.e. Contractors warehouse) shall be permitted.

(S) Final or progress application for payments will not be processed unless all hazardous waste manifests generated to date have been received and reviewed by the Engineer.

(T) All asbestos materials, wastes, shower water, polyethylene disposable equipment and supplies shall be disposed of as contaminated waste, in accordance with the EPA regulation (40 CFR, Section

61.150) and those requirements of the New York State Department of Environmental Conservation and the New York Department of Sanitation.

(U) The Contractor shall transport all sealed drums to a landfill disposal site approved by the Department of Environmental Conservation and the EPA. Transportation shall be performed by a New York State registered Waste Hauler, where required. When presenting the ACW for disposal the Contractor or subcontractor shall:

(1) Ensure that waste container is properly labeled according to the National Emission Standard for Hazardous Air Pollutants (NESHAP); Asbestos Revision, 40 CFR, Part 61, Subpart M. The labels shall include the name of the waste generator and the location where the waste was generated.

(2) Comply with all applicable orders issued pursuant to asbestos disposal.

(3) Ensure that ACW has been sufficiently wetted down.

(4) Rewet and repackage any damaged containers.

(5) Keep ACW separate from all other wastes.

(V) The Contractor shall notify the waste disposal site, at least 24-hours prior to transportation of contaminated waste to be delivered. The Contractor shall determine if a larger notification period is required.

(W) At the site, the Contractor or Waste Hauler trucks shall approach the dump location as close as possible for unloading asbestos waste. Containers shall be carefully placed in the ground. Do not throw containers from truck.

(X) The Contractor or Waste Hauler shall inspect containers as they are unloaded at the disposal site. Material in damaged containers shall be repacked in empty containers, as necessary.

(Y) The Contractor or Waste Hauler shall not remove asbestos-containing waste material from drums unless required to do so by the disposal site City. Used drums shall be disposed of as asbestos-contaminated waste.

(Z) All personnel engaged in unloading of the containers at the waste site shall wear protective clothing. The disposable clothing shall include head, body and foot protection. Minimum respiratory protection shall be half face, dual cartridge, air purifying respirators with HEPA-filters. Workers shall remove their protective clothing at the disposal site, place it in labeled disposal bags and leave them with the deposited waste shipment.

(AA) For the compaction operation, the Contractor shall ensure that disposal sites personnel have been provided with personal protective equipment by the disposal operator. If the disposal site City has not provided this protective equipment, the Contractor shall supply protective clothing and respiratory protection for the duration of this operation (PAPR respirators are mandatory).

(BB) If containers are broken or damaged, the Contractor or Waste Hauler shall, using personnel who are properly trained and wearing proper protective equipment, shall repackage the waste in properly labeled containers. The Contractor shall then clean the entire truck and its contents using HEPA-vacuums and wet cleaning techniques until no visible residue is observed.

(CC) Following the removal of all containerized waste, the Contractor shall decontaminate the truck cargo area using HEPA-vacuums and/or wet cleaning techniques until no residue is observed. All 6-mil polyethylene sheeting shall be removed and discarded as asbestos-containing waste material along with contaminated cleaning material and protective clothing, in containers at the disposal site.

(DD) The transporter(s) of all asbestos waste shall not back-haul any items on returning from landfill/disposal site.

(EE) All asbestos waste shall be disposed of in an approved Asbestos Landfill site only.

(1) NO PERSON UNDER ANY CIRCUMSTANCES SHALL ABANDON A.C.W. The same shall be disposed of only by certified persons in approved landfills.

(2) A manifest form will be signed by the Landfill documenting receipt and acceptance of the asbestos-containing waste. This manifest will be furnished to the City of New York.

(3) It is the responsibility of the Asbestos Contractor to determine current waste handling, transportation and disposal regulations for the work site and for each waste disposal landfill. The Asbestos Contractor must comply fully with these regulations and all appropriate U.S. Department of Transportation, EPA and other Federal, State and Local entities' regulations and all other current legal requirements.

(4) The Asbestos Contractor shall obtain an agreement from the transporter(s) that the practice of "Back-Hauling" will not be engaged in, with respect to any and all waste loads taken from this site during the work.

(5) The Asbestos Contractor will document actual disposal of the waste at the designated landfill by having completed a Disposal Certificate and will provide a copy of the same to the Department of Design and Construction.

67.11.6 ACCEPTANCE

67.11.6.1 ACCEPTANCE

(A) Upon satisfactory completion of all decontamination procedures, a certificate will be issued by the Engineer with copies to all parties.

(B) A Letter Of Compliance stating that all the work on the project was performed in accordance with the specifications and all applicable Federal, State and Local regulations.

(C) All warranties as stated in the specifications.

67.11.7 MEASUREMENT AND PAYMENT

67.11.7.1 MEASUREMENT

The quantity of "INCREMENTAL COST FOR ASBESTOS ABATEMENT WORK PERFORMED ON EXISTING STEEL PIPE WATER MAIN TO BE REMOVED, COMPLETE" to be measured for payment shall be the actual number of linear feet of each size steel water main pipe and fittings with asbestos containing coal tar wrap removed in compliance with the requirements of this section. Measurement shall be made in linear feet along the axis of the pipes. The removal lengths of valves, fittings and other pipe connections that are attached to the steel pipe water main and required to be removed as part of the removal operation of the existing steel pipe water main shall be included for purpose of this calculation.

No additional measurement for payment will be made for the removal of any coal tar wrap asbestos containing material from the existing steel pipe which is designated to remain in place, but is required to facilitate the cutting of the existing pipe and joining it to the new pipe to the existing steel pipe. The cost shall be deemed to be included in the unit price bid for this item.

67.11.7.2 PAYMENT

The contract price for "INCREMENTAL COST FOR ASBESTOS ABATEMENT WORK PERFORMED ON EXISTING STEEL PIPE WATER MAIN TO BE REMOVED, COMPLETE" shall be the unit price bid per

each size existing steel pipe water main's incremental cost difference for all labor, material, equipment, insurance, and incidentals required to complete all work under other scheduled contract items, using the methods required under this section to remove and dispose of coal tar wrap asbestos containing materials associated with water main replacement.

This item will be paid only in conjunction with other scheduled contract items for installing the new steel water main pipe (e.g. Payment would be made under the unit price bid for Item No. 60.21SP6T72 - FURNISHING, DELIVERING AND LAYING 72-INCH STRAIGHT STEEL PIPE, 3/4-INCH WALL THICKNESS, for the length of pipe installed plus payment would be made under the unit price bid for Item No. 67.11AA72 - INCREMENTAL COST FOR ASBESTOS ABATEMENT WORK PERFORMED ON EXISTING 72-INCH DIAMETER STEEL PIPE WATER MAIN TO BE REMOVED, COMPLETE, in order to remove and dispose of the existing asbestos contaminated coal tar wrapped pipe). However, payment will be made under this item only for the initial length of pipe and appurtenances removed at a particular location.

Payment for Incremental Cost For Asbestos Abatement Work Performed On Existing Steel Pipe Water Main To Be Removed, Complete will be made under the Item Number as calculated below:

The Item Numbers for Incremental Cost For Asbestos Abatement Work Performed On Existing Steel Pipe Water Main To Be Removed, Complete have nine characters. (The decimal point is considered a character, the third character.)

(1) The first five characters shall define Incremental Cost For Asbestos Abatement Work Performed On Existing Steel Pipe Water Main To Be Removed, Complete:

67.11

(2) The sixth and seventh characters shall define Incremental Cost For Asbestos Abatement Work Performed On Existing Steel Pipe Water Main To Be Removed, Complete:

AA - Incremental Cost For Asbestos Abatement Work Performed On Existing Steel Pipe Water Main To Be Removed, Complete

(3) The eighth and ninth characters shall define the Diameter of the Existing Steel Pipe Water Main. (The eighth and ninth characters representing the unit of inches for the Diameter of the Existing Steel Pipe Water Main.) See examples below:

36 - 36"
72 - 72"

(4) Examples of Item Numbers together with Description and Pay Unit as provided in the Bid Schedule are provided below:

Item No.	Description	Pay Unit
67.11AA36	INCREMENTAL COST FOR ASBESTOS ABATEMENT WORK PERFORMED ON EXISTING 36-INCH DIAMETER STEEL PIPE WATER MAIN TO BE REMOVED, COMPLETE	L.F.
67.11AA72	INCREMENTAL COST FOR ASBESTOS ABATEMENT WORK PERFORMED ON EXISTING 72-INCH DIAMETER STEEL PIPE WATER MAIN TO BE REMOVED, COMPLETE	L.F.

APPENDIX

NYCDEP ATTACHMENTS

QED1014

ADDENDUM NO. 4

NYC DEP Asbestos Control Program VAR #_____

ATTACHMENT TM
REQUIREMENTS FOR MODIFIED TENT PROCEDURES (FOR GROSS ABATEMENT)
APPLIES TO VARIANCES FROM TITLE 15, CHAPTER 1, RULES OF THE CITY OF NEW YORK, SECTIONS 1-81(m) AND 1-91(c) {15 RCNY § 1-81(m) AND § 1-91(c)}

1. All tent enclosures and contiguous spaces within a radius of 10 feet shall be roped off and regulated to allow only certified workers and authorized visitors to enter.

2. 15 RCNY § 1-106 shall be complied with except that
   I. all tents shall be lined with 2 layers of plastic sheeting (6-mil thickness at a minimum);
   ii. the amounts of ACM that may be abated in each modified tent shall NOT EXCEED (a) 160 square feet and/or (b) 260 linear feet.
   iii. the total amount of ACM that may be abated at any one time in several modified tents shall NOT EXCEED 1,000 combined square feet plus linear feet.

3. All modified tents shall be fully framed (including horizontally across the top, if applicable) with 2x3 (minimum) wood or metal studs spaced not more than 36 inch center-to-center vertically around all sides (except at the entry/exit which shall not exceed 36 inch width); and

4. A minimum of one air volume change per 15 minutes through each modified tent shall be maintained.

5. An airlock having at least 3 feet length between the two curtained doorways shall be constructed at the entrance to each and every tent if the decontamination unit is not attached to the tents, and

6. If a decontamination unit is not attached to each tent, located within each airlock there shall be extra clean and uncontaminated disposable protective suits (e.g.Tyveks), and one such clean suit shall be worn by each worker in the airlock, immediately after removal of the outer suit as per 15 RCNY § 1-106(k), before each worker exits any airlock.

7. Any decontamination unit that is not attached to a tent (i.e. that is remote from a tent) shall be constructed in compliance with the requirements of Attachment D and must be located on the same floor as the modified tents.

8. Decontamination units that are attached to tents shall comprise at least a shower room and a clean room, with one curtained doorway separating them, and with a second curtained doorway separating the tent from the shower room.

9. After the ACM removal and bagging [refer 15 RCNY § 1-106(f) and (g)], the bagged waste shall be HEPA-vacuumed then wet cleaned and transferred into the airlock or into the shower room (as per Items 5 and 8 above respectively) for double bagging, and thereafter the double-bagged waste shall be transferred outside the airlock or outside the clean room for its final transfer to storage in a holding area and/or to legal means of disposal.

10. If the integrity of the tent is compromised and/or visible emissions are detected outside the tent and/or levels exceed 0.01 f/cc work shall stop and 15 RCNY § 1-45(a) shall be complied with immediately. Post-abatement clearance air samples shall be required in the areas outside the tent.

11. A minimum of 3 during area air samples and 3 post abatement clearance air samples must be taken in compliance with section 1-41 of the NYC DEP Asbestos Regulation for each modified tent.

NOTE: This attachment may be revised at any time by the Department.

TRU/JM 04/2005

NYC DEP ASBESTOS CONTROL PROGRAM VAR#_____

ATTACHMENT D
REMOTE WORKER DECONTAMINATION UNIT

APPLIES TO VARIANCE FROM TITLE 15, CHAPTER 1, RULES OF THE CITY OF NEW YORK SECTIONS 1-82(a) AND 1-83(a)* {15 RCNY § 1-82(a) AND § 1-83(a)*}.

1. The remote worker decontamination unit shall be constructed outside the work area, in accordance with 15 RCNY § 1-82, and attached to individual glovebag work areas (or tents) or common space leading to individual work areas.

2. The remote worker decontamination unit shall consist of, at least, a shower room, and a clean room separated from each other by an airlock and from the glovebag work area.

3. In addition to the shower heads, the shower room shall be provided with a flexible hose for equipment and waste decontamination.

4. The remote holding area for the asbestos containing waste shall comply with Title 16, Chapter 8, Rules of the City of New York (16RCNY 8 ET SEQ.)

5. The decontamination unit shall be maintained in accordance with 15 RCNY § 1-94 (except sub-section b).

6. All asbestos handlers shall wear two disposable suits, including gloves, hood and footwear, and appropriate respiratory equipment, after removing street clothes in the clean room, and must exit from the shower room.

7. Each worker, before leaving the glovebag work area (or tent), shall clean the outside of the respirators and outer protecting clothing by wet cleaning and/or HEPA vacuuming. The outer disposable suit shall be removed in the work area and the workers shall then proceed to the shower room. The inner disposable suit and respirator shall be washed thoroughly before removing and prior to aggressive shower.

8. After the ACM removal and bagging {refer 15 RCNY § 1-105(c)15}, the bagged waste shall be HEPA-vacuumed and then transferred to the shower room for wet cleaning and double bagging, prior to storage and disposal.

9. Worker and waste decontamination cannot take place at the same time and decontamination system shall be in place for the entire duration of the abatement activities.

10. The following additional conditions must be complied with in order to re-use an attached decontamination enclosure system(s) as a remote decontamination unit.

    i) Final air clearance must be achieved in the full containment area to which the decontamination enclosure system(s) is attached.

    ii) The decontamination enclosure system(s) shall be re-plasticized in accordance with 15 RCNY § 1-82.

*Required for projects disturbing 1,000 or more linear feet.

NOTE: This attachment may be revised at any time by the Department.

TKU/JM 4/2005

ATTACHMENT
ASBESTOS CONTAINING COAL TAR WRAP AND PIPE REMOVAL PROCEDURE

The work procedure to be utilized for the removal of asbestos and the water main pipe shall be as follows:

I. Personal Protective Equipment

Prior to beginning work, all workers performing the removal of the coal tar wrap must equip themselves with the proper personal protective equipment (PPE). The PPE required for the removal of coal tar wrap includes:

(1) Tyvek suit with boot protection ("booties").
(2) Disposable gloves (latex ornitrile).
(3) Eye protection.
(4) Half face respirator with HEPA cartridges.

In addition to the PPE listed above, the tools and materials which will be required for this operation shall include the following:

(1) Amended water solution.
(2) 6-mil plastic sheeting.
(3) 6-mil plastic asbestos disposal bags.
(4) Disposable rags or wipes.
(5) Duct tape.
(6) Hand tools (chipping hammer, chisel, scraper, putty knife).
(7) Abrasive pads.
(8) Asbestos barrier tape.

NOTE: No power tools, grinders, sanders, or burning apparatus can be used to remove coal tar wrap.

II. Work Procedure

(A) Removal:

The following work procedure shall be employed when removing coal tar wrap:

(1) Set up the asbestos barrier tape around the perimeter of the excavation.
(2) Place 6-mil plastic sheeting under the steel water main pipe to collect loose debris.
(3) Wet down coal tar wrap with amended water.
(4) Use hand tools to break away the large chunks of coal tar wrap. Place the removed wrap in a plastic asbestos disposal bag.
(5) Remove only the amount of wrap around the circumference of the pipe (two (2) foot wide strip) necessary to cut the pipe for future removal.
(6) Ensure that the intact coal tar wrap on the pipe is not damaged when removing the pipe from the excavation.
(7) For sections of pipe left in the ground, seal all ends of exposed wrap with duct tape. Plastic wrap and duct tape all coated pipes that will be removed from the site.
(8) In the event that some wrapping material did not fall onto the plastic sheeting, collect these pieces and place them on the sheeting.
(9) Once coal tar wrap removal is completed and the exposed ends are sealed, fold the plastic sheeting onto itself and place it in a properly labeled asbestos bag.
(10) Wet wipe all equipment with amended water and rags before removal from work area. Place used rags and old work gloves in asbestos disposal bags.
(11) Ensure that bagged ACM is wet prior to transportation.
(12) Cut the pipe at the abated locations using mechanical, cold cutting methods.
(13) Double wrap large sections of cut pipe with intact ACM with two (2) layers of six (6) mil plastic sheeting, sealed with tape in ten (10) foot sections.

ADDENDUM NO. 4

(14) Wrapped sections of pipe with intact ACM shall be properly labeled in accordance with OSHA Regulations 29 CFR 1926 58K(2), and shall be kept wet until disposal in compliance with Title 15, Chapter 1, Rules of the City of New York (15RCNY 1).

(B) Disposal:

The following work procedure shall be employed when disposing coal tar wrap:

(1) Double bag all waste materials. The inside and outside bags must have an asbestos label with the work location identified.
(2) Complete an asbestos waste tracking form and attach it to the bag.
(3) Place double bagged waste in a truck and transport it to an approved New York State asbestos landfill.
(4) All ACM waste bags must be picked up and disposed of on a daily basis at the end of each shift.

By signing in the space provided below, the bidder acknowledges receipt of the forty-five (45) pages of this Addendum.

THIS ADDENDUM MUST BE SIGNED BY ALL BIDDERS AND ATTACHED TO THEIR BIDS.

HALCYON CONSTRUCTION CORP.
65 MARBLE AVENUE
PLEASANTVILLE, NEW YORK 10570

Name of Bidder

By:

G. Saini

GURDIP SAINI, P.E.
Associate Commissioner/Design I

CITY OF NEW YORK
DEPARTMENT OF DESIGN AND CONSTRUCTION
DIVISION OF INFRASTRUCTURE

ADDENDA CONTROL SHEET

BID OPENING DATE: JUNE 2, 2016

PROJECT NO.: QED1014

TITLE: REHABILITATION OF EXISTING TRUNK WATER MAINS IN CRESCENT STREET, ETC

ADDENDA ISSUED	No. OF DRAWINGS	DATE
#1: Additional Amendments		04/11/2016
#2: Additional Amendments		04/28/2016
#3: Additional Amendments	18	05/10/2016
#4: Additional Amendments		05/10/2016
#5: Additional Amendments		05/25/2016

ATTACH TO CONTRACT DOCUMENTS

THE CITY OF NEW YORK
DEPARTMENT OF DESIGN AND CONSTRUCTION
INFRASTRUCTURE DIVISION
BUREAU OF DESIGN

PROJECT ID: QED1014

REHABILITATION OF EXISTING TRUNK WATER MAINS IN CRESCENT STREET FROM 34TH AVENUE TO 31ST AVENUE; 31ST AVENUE FROM CRESCENT STREET TO 41ST STREET; AND 41ST STREET FROM 31ST AVENUE TO 25TH AVENUE

INCLUDING DISTRIBUTION WATER MAIN, SEWER AND TRAFFIC SIGNAL WORK

Together With All Work Incidental Thereto

BOROUGH OF QUEENS

ADDENDUM NO. 5

DATED: May 25, 2016

This Addendum is issued for the purpose of amending the requirements of the contract documents and is hereby made part of said contract documents to the same extent as if it was originally included therein.

(1) **Refer** to the Bid and Contract Documents, VOLUME 1 OF 3, "APPRENTICE PROGRAM QUESTIONNAIRE", page 20;
Delete this page in its entirety;
Substitute with revised attached "APPRENTICE PROGRAM QUESTIONNAIRE (APQ)", pages 20 and 20A.

(2) See attached list of QUESTIONS SUBMITTED BY BIDDERS AND RESPONSES PROVIDED BY DDC for additional information.

By signing in the space provided below, the bidder acknowledges receipt of the one (1) page of this Addendum plus three (3) pages of attachments.

THIS ADDENDUM MUST BE SIGNED BY ALL BIDDERS AND ATTACHED TO THEIR BIDS.

for Purnima Dhara K.T. 5/26/16
GURDIP SAINI, P.E.
Associate Commissioner/Design I

_____
Name of Bidder

By:_____

QUESTIONS SUBMITTED BY BIDDERS AND RESPONSES PROVIDED BY DDC

QUESTION NO. 1: With reference to Section 60.61, page SW-16, Final Pressure Testing & Recommissioning, is the intent to bulkhead each 52" slip lining run and pressure test individually or pressure test from 48" valve to valve including open cut piping?.

ANSWER NO. 1: As per Section 60.61.8 (E), INSPECTION AND INITIAL TESTING, after the 52" steel pipe liner has been inserted into the existing 60" water main (casing pipe), the 52" steel pipe shall be given a combined pressure and leakage test prior to the grouting process. Temporary bulkheads will be required to test each individual segment.

With reference to Section 60.61.10 FINAL PRESSURE TESTING AND RECOMMISSIONING, the intent is also to final pressure test the pipe from valve to valve for the entire length including pipe installed by the open cut method.

QUESTION NO. 2: With reference to Section 60.61, page SW-12, Low Weight Cement Grout.
After consultation with grouting specialty contractors we request the NYCDDC review the following:

- Can the specified compressive strength of 1000 psi be reduced to 300 psi?
  This will enable a superior flowable mix that may be installed at lower pressures.
- We recommend grout ports be allowed; either factory installed on the 52" liner pipe or field installed on the existing 60" casing pipe. Spacing to be as required by grouting contractor. Completely grouting 900'+ runs with such a tight annular space without intermediate ports will be very difficult.

ANSWER NO. 2: With reference to section 60.61.4 (C)(1) Low Weight Cement Grout, compressive strength shall be 1,000-psi minimum.

Grout ports on 52" liner pipe shall not be permitted. Field installed grouting ports on the existing 60" casing pipe with spacing is to be determined by the grouting specialist/contractor and/or as approved by the Engineer. Prior to the start of construction, the Contractor shall submit construction requirements and grouting procedures to the Engineer for review and approval.

APPRENTICESHIP PROGRAM QUESTIONNAIRE ("APQ")

Bidder Name: _____

Project ID Number: _____

The Bidder MUST complete, sign, and submit this Apprenticeship Program Questionnaire with its bid.

1. Does the bidder have any Apprenticeship Program agreement(s) appropriate for the type and scope of work to be performed? (Note: Participation may be by either direct sponsorship or through collective bargaining agreement(s).)

   _____YES _____NO

2. Has/have the bidder's Apprenticeship Program agreement(s) been registered with, and approved by the New York State Commissioner of Labor ("NYSDOL Commissioner")?

   _____YES _____NO

3. Has/have the bidder's Apprenticeship Program successfully passed the two-year Probation period following its initial registration with the New York State Department of Labor ("NYSDOL")?

   _____YES _____NO

If the answers to Questions 1, 2, and 3 are "Yes". The bidder shall, in the space below (and/or attached herewith where applicable), provide the contact information for such Apprenticeship Program(s) as well as information demonstrating that such Apprenticeship Program(s) have passed the two-year Probation period following its initial registration with the NYSDOL. (The bidder may attach additional pages if necessary).

- **Where the bidder directly sponsors any such apprenticeship Program(s),** the bidder shall provide the following:
  - The trade classification(s) covered by such program(s), and the date(s) such program(s) was/were approved by the NYSDOL Commissioner; and/or
  - A copy of a letter(s) from the NYSDOL, on NYSDOL's letterhead, executed by an official thereof, which verifies/verify the trade classification(s) covered by such program(s), and the date(s) such program(s) was/were approved by the NYSDOL Commissioner and the Active status of such program(s).

- **Where the bidder participates in any such Apprenticeship Program(s) through its membership in an employer organization(s) that directly sponsors such program(s) or where the employer association(s) participates in such program(s) through collective bargaining,** the bidder shall provide the following:
  - The contact information for the employer organization(s), and the apprenticeable trade(s) covered pursuant to the bidder's affiliation therewith, and the date such program(s) was/were approved by the NYSDOL Commissioner; or
  - A letter(s) from such employer organization(s), on letterhead of such organization(s), executed by an officer, delegate or official thereof, which verifies/verify the trade classification(s) covered by such program(s) was/were approved by the NYSDOL Commissioner, and that the bidder is both a member in good standing of the identified employer organization <u>and is subject to the provisions of the Apprenticeship Program agreement(s) sponsored thereby</u>.

APPRENTICESHIP PROGRAM QUESTIONNAIRE ("APQ")

Project ID Number: _____

- **Where the bidder participates in any such Apprenticeship Programs through collective bargaining agreements,** the bidder shall provide the following:
  - The contact information for such collective bargaining entity(ies) and the apprenticeable trade(s) covered pursuant to the bidder's affiliation therewith;
  - A letter(s) from such collective bargaining entity(ies), on letterhead of such entity(ies), executed by an officer, delegate or official thereof, which verifies/verify the bidder's status as a signatory/participant in good standing to such collective bargaining entity(ies) Apprenticeship Program Agreements.

_____

_____

_____

_____

_____

_____

_____

_____

_____

_____

_____

_____

_____

_____

Bidder: _____

By: _____ Title: _____

(Signature of Partner or Corporate Officer)

Date: _____

Department of Design and Construction

INFRASTRUCTURE DIVISION
BUREAU OF DESIGN

VOLUME 3 OF 3

PROJECT ID: QED1014

REHABILITATION OF EXISTING TRUNK WATER MAINS IN CRESCENT STREET FROM 34TH AVENUE TO 31ST AVENUE; 31ST AVENUE FROM CRESCENT STREET TO 41ST STREET; AND 41ST STREET FROM 31ST AVENUE TO 25TH AVENUE

INCLUDING DISTRIBUTION WATER MAIN, SEWER AND TRAFFIC SIGNAL WORK

Together With All Work Incidental Thereto
BOROUGH OF QUEENS
CITY OF NEW YORK

_____
Contractor

_____

Dated_____, **20**___

_____